D1 ADVANCE PLANNING

PROJECT STUDY REPORT (BRIDGE REPLACEMENT) To Request Programming in the 2010 SHOPP

01-MEN-1
PM 42.4/43.3
01-40140K
Program 201.110
August 2009

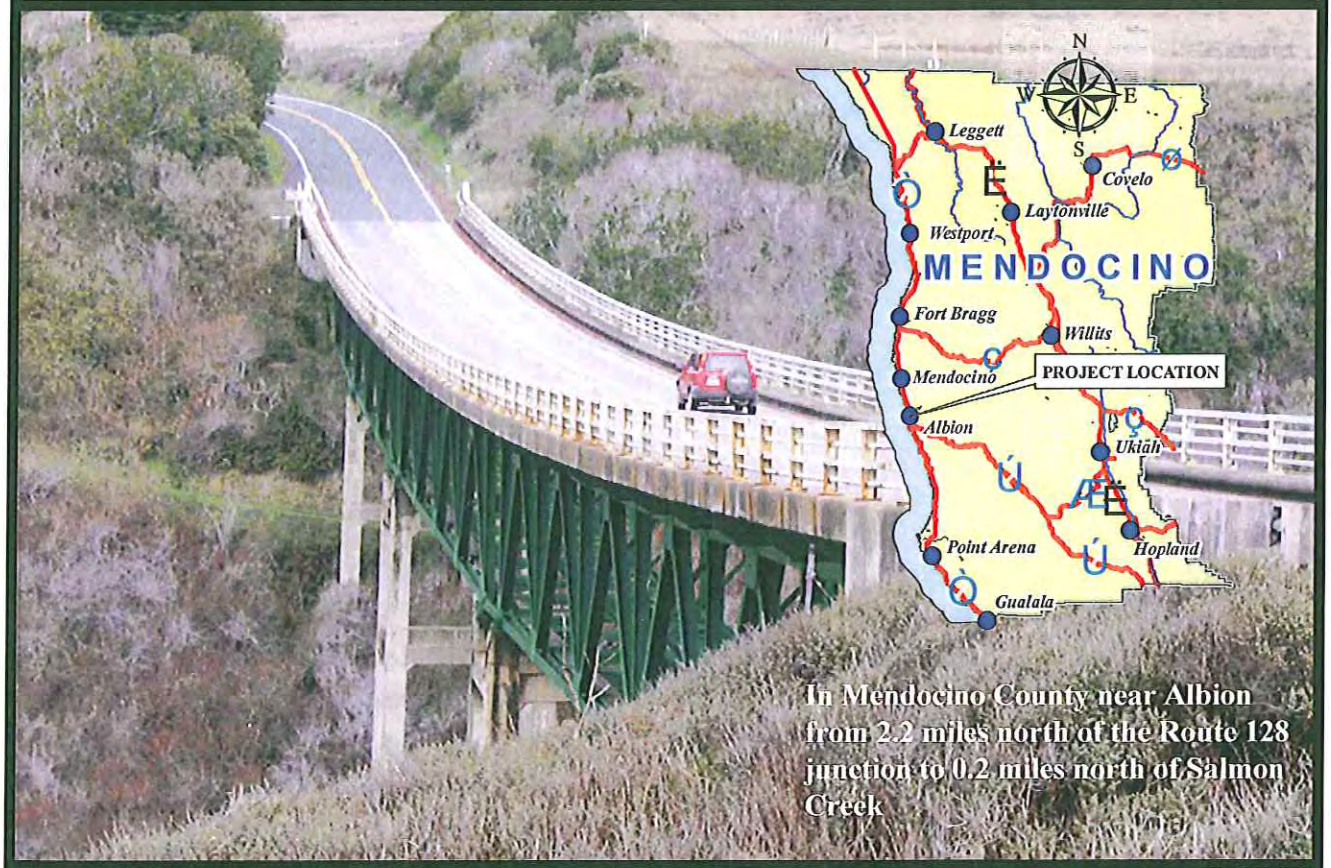

I have reviewed the right of way information contained in this Project Study Report and the R/W Data Sheet attached hereto, and find the data to be complete and accurate:

LINDY K. LEE
NORTH REGION DIVISION CHIEF – RIGHT OF WAY

APPROVAL RECOMMENDED:

MIKE YANCHEFF
PROJECT MANAGER

ROYAL McCARTHY
PROGRAM ADVISOR

APPROVED:

CHARLES C. FIELDER
DISTRICT DIRECTOR

August 26 2009
DATE

STATE OF CALIFORNIA • DEPARTMENT OF TRANSPORTATION

This Project Study Report has been under the direction of the following registered engineer. The registered engineer attests to the technical information contained herein and the engineering data upon which recommendations, conclusions, and decisions are based.

Jeffrey Pimentel, P.E.
Registered Civil Engineer

8/18/09
Date

REGISTERED PROFESSIONAL ENGINEER
JEFFREY L. PIMENTEL
No. 68422
EXP. 9/30/09
CIVIL
STATE OF CALIFORNIA

1. INTRODUCTION

This project proposes to replace the Salmon Creek Bridge (No. 10-0134). There are four alignment alternatives. Each alignment alternative includes multiple structure type options. Alternative 1 would be constructed west of the existing alignment and Alternative 2 east of the existing alignment. Alternatives 3 and 4 would be constructed west and east of the existing alignment, respectively, and in stages close to the existing alignment. All alternatives consist of construction of a new bridge, asphalt concrete overlay, new structural section off the existing centerline, new structural section at locations where the vertical profile is raised or lowered to accommodate an improved vertical curvature. Retaining walls are proposed at various locations to avoid impacts to property and provide improved stopping sight distance.

See the Cost Estimate in Attachment E for specific work items included in this project. It is proposed that this project be funded from the 210.110 Bridge Rehabilitation Program in the 2010 SHOPP cycle as a long lead project. The total cost including right of way is $59,300,000 (2016/2017 fiscal year).

Project Limits (Dist., Co., Rte., PM)	1 - Men -1 – 42.4/43.3
Number of Alternatives:	4 plus the "no build" alternative
Programmed or Proposed Capital Construction Costs	$55 million (2016/2017 fiscal year)
Programmed or Proposal Capital Right of Way Costs:	$4.3 million (2016/2017 fiscal year)
Funding Source:	201.110 Bridge Rehabilitation Program
Type of Facility (conventional, expressway, freeway):	Conventional Highway
Number of Structures:	1 bridge
Anticipated Environmental Determination/Document	IS/ND — CEQA EA/FONSI — NEPA
Legal Description	In Mendocino County near Albion from 2.2 miles north of the Route 128 junction to 0.2 miles north of Salmon Creek
Project Category	Bridge Replacement

It is recommended that the cost associated with Alternative 4 (structure type 4B) be programmed into the 2010 SHOPP. A project report will serve as approval of the "selected" alternative.

2. BACKGROUND

The Salmon Creek Bridge Project is located on State Route 1 in Mendocino County, from PM 42.4 to PM 43.3, near Albion, 2.2 miles north of the Route 128 junction. See Attachment A for a Vicinity Map.

The existing facility, within the project limits is a two-lane conventional highway and was most recently paved with OGAC in 2001. The posted speed limit is 50 mph. The vertical profile consists of an 800-foot vertical sag curve with the low point located near the bridge's center. Approaching grades consist of a -7.00 percent north-aspect grade entering from the south and a 6.00 percent south-aspect grade exiting to the north. The structure is located on a tangent.

3. PURPOSE AND NEED STATEMENT

Need:

The Salmon Creek Bridge and approaching alignment have a number of structural and geometric deficiencies. The structure has a Sufficiency Rating of 49.70 percent and the Structure Replacement and Improvement Needs Report (STRAIN) Urgency Factor for replacement is two years.

Purpose:

The purpose of this project is to replace this functionally obsolete and structurally deficient structure with one that will improve geometrics and structural integrity, to ensure uninterrupted traffic movements in the event of a vehicular breakdown, seismic event or other catastrophic failure. There is no interim seismic retrofit work that can reduce the geometric and structural deficiencies of the existing structure.

4. EXISTING FACILITY, DEFICIENCIES, AND TRAFFIC DATA

A description of the existing structure and approaching Route 1, along with existing facility deficiencies and traffic data, are included in the following section.

4A. ROADWAY GEOMETRIC INFORMATION

Table 4. A.1. Roadway Geometric Information

Facility	Minimum Project Curve Radius	Through Traffic Lanes			Paved Shoulder Width		Median	Shoulder is a Bicycle Lane	Bicycle Route
		No. of Lanes	Lane Width	Type	Left	Right	Width	(Y/N)	(Y/N)
Existing	650-feet	2	11-12 ft	-	1-4 ft	1-4 ft	N/A	Y	Y
Proposed Alt. 1	850-feet	2	12 ft	-	4 ft	4 ft	N/A	Y	Y
Proposed Alt. 2	1,000-feet	2	12 ft	-	4 ft	4 ft	N/A	Y	Y
Proposed Alt. 3	1,000-feet	2	12 ft	-	4 ft	4 ft	N/A	Y	Y
Proposed Alt. 4	1,000-feet	2	12 ft	-	4 ft	4 ft	N/A	Y	Y
Standard	850-feet	-	12 ft	-	8 ft	8 ft	N/A	Y	Y

The project location is a curvilinear two-lane conventional highway that follows the coastline. Route 1 is functionally classified as a rural minor arterial. Within the project limits lane widths are between 11 and 12 feet and shoulder widths are between 1 and 4 feet in both directions.

4B. GEOMETRIC DEFICIENCIES

The radial curve at PM 42.56 does not meet current design standards for superelevation transition length and curvature. In addition, the vertical sag curve at PM 42.54, the vertical crest curve at PM 42.56, and the vertical crest curve at PM 42.99/43.14 do not meet current design standards for stopping sight distance.

4C. PEDESTRIAN/NON-MOTORIZED FACILITIES

In accordance with the Americans with Disabilities Act of 1990 (ADA) and Section 4450 of the California Government Code, ADA standards apply to this project and design should adhere to Design Information Bulletin (DIB) 82-03. Appropriate project records should document the fact that necessary review and approvals have been obtained.

Route 1 is legislatively designated as the "Pacific Coast Bike Route". The Route Concept Report for the route identifies a need to provide shoulder widening improvements to accommodate non-motorized traffic within the project area. Route 1 has seasonally high bicycle traffic volumes during the summer months. Most bicycle

traffic along this section of Route 1 consists of long-distance touring in the south bound direction.

4D. STRUCTURES INFORMATION

The Salmon Creek Bridge (PM 43.00/43.13) is located on a tangent with a vertical profile that consists of an 800-foot vertical sag curve with the low point located at the bridge's center. The structure has a length and width of 685 and 26 feet, respectively, and has two 12-foot lanes and 1-foot shoulders. See Table 4.D.1 for more information.

Table 4.D.1. Structural Information

Structure	Net Width			Replace Bridge	Work Identified in STRAIN	Replace Bridge Approach Rail
Name/No.	Existing	Standard	Proposed	(Y or N)	(Y or N)	(Y or N)
No. 10-0134 Salmon Creek Bridge	26 ft	40 ft	57 ft	Y	Y	Y
Structure	Shoulder Width			Proposed Pedestrian Walkway		
Name/No.	Existing	Standard	Proposed	Number	Width	Traffic Barrier
No. 10-0134 Salmon Creek Bridge	1 ft	8 ft	8 ft	1	5 ft	Y

The bridge was built in 1950 and is comprised of a 7-span steel deck Warren truss with steel beam spans over tower bents with a cast-in-place reinforced concrete deck. See Table 4.D.2 for a list of work performed on the existing structure.

Table 4.D.2. Bridge Projects Overview

Construction Year	Work Performed
1950	Construction
1951	Modifications
1961	Rail Revisions
1981	Repair
1985	Earthquake Upgrade
1990	Deck Rehabilitation
2000	Earthquake Restrainer
2001	Deck Treatment OGAC Overlay
2004	Paint

Both ends of the structure are preceded by north and south facing Narrow Bridge warning signs. The structure is listed in the STRAIN Report, and is identified in the Bridge Inspection Reports as having need of rehabilitation, upgrade, and seismic retrofit. See Attachment F for the most recent Bridge Inspection Report.

4E. STRUCTURAL DEFICIENCIES

The structure is fracture critical due to a lack redundancy of the steel deck truss and steel floor beam members and is designated as Structurally Deficient due to the condition of the deck and Functionally Obsolete due to deck geometry. The Peer Review Fact Sheet (dated 08/15/07) recommends stripping the existing paint coat to allow for fracture critical inspection. The structure currently requires full removal of the existing coating system and repainting every 4 to 5 years at an estimated cost of $2,500,000, and was last painted in 2004/2005. The horizontal beam on the left side of tower 3-4 has severe section loss, and various members throughout both trusses have minor section loss. The existing rail has been recommended for replacement because it currently does not meet standards. The cost for this work is unknown because replacing the existing rail with a standard rail may require extensive deck rehabilitation, possible replacement of the deck, and additional substructure work to accommodate the increased load to the substructure. These costs are very preliminary and are likely to be much higher after a full structural assessment is done.

To reduce potential seismic vulnerability, strengthening of the steel truss members will need to be performed at an estimated cost of $1,100,000. There are several work recommendations to repair spalls and delaminations in the deck and substructure at an estimated cost of $90,000. The additional cost needed to rehabilitate, maintain, and provide geometric improvements is discussed in the Alternatives section.

4F. VEHICLE TRAFFIC DATA AND COLLISION HISTORY

Current and forecasted traffic data is listed in Table 4.F.1.

Table 4.F.1. Traffic Data

Annual ADT			
2007	2016	2026	2036
3,100	3,800	4,570	5,350
Peak Hour			
2007	2016	2026	2036
430	530	640	740
20-Year Directional %			60
20-Year DH Truck %			5.0
10-Year TI			8.0
20-Year TI			9.0
10-Year TI (shoulder)			5.0
20-Year TI (shoulder)			5.5

Collision details for Route 1 from PM 42.4 to 43.4 between October 1, 2004 and March 30, 2008 are listed in Table 4.F.2.

Table 4.F.2. Collision Details

Men 1	Total Collisions	Type of Collision			Primary Collision Factors	
		Fatal	Injuries	PDO	Speeding	Other Violations
PM 42.4/43.4	2	0	1	1	1	1

PDO = Property Damage Only PCF = Primary Collision Factor

Collision rates for Route 1 from PM 42.4 to 43.4 between October 1, 2004 and March 30, 2008 are listed in Table 4.F.3.

Table 4.F.3. Collision Rates

Men 1	Actual			Average		
	Fatal	F+I	Total	Fatal	F+I	Total
PM 42.4/43.4	0.000	0.25	0.49	0.033	0.63	1.36

F+I = Fatal + Injury *Note: Rates are in collision per million vehicle miles (MVM)*

There have been 2 collisions on this segment of highway 1 over a three-and-a-half year period. The total collision rate for this segment of Route 1 is less than half the state wide average for similar facilities.

5. CORRIDOR AND SYSTEM COORDINATION

The Transportation Concept Report (TCP) of September 2003 outlines the Facility Concept, from the Route 128 junction (PM 40.3) to Little River (PM 48.0), and states that this segment should remain a two-lane conventional highway. The Annual Average Daily Traffic (AADT) and Peak Hour Average Daily Traffic is 3,100 and 430, respectively, as of 2007. The Coastal Act and the Local Coastal Plan indicates that the Rehabilitation Strategy for this segment of State Route 1 is to widen the roadway portion of this segment to a 32-foot width.

6. ALTERNATIVES

Project alternatives consist of four "build" alternatives and one "no build" alternative. Table 6.1 summarizes estimated costs for all "build" alternatives.

Table 6.1. Alternative Cost Summary Table *2016/2017 fiscal year*

	Alternative 1	Alternative 2	Alternative 3	Alternative 4
Total Roadway Items	17.1	17.2	17.8	18.1
Total Structure Items*	35.7	33.7	36.9	36.9
Subtotal Construction Costs	52.8	50.9	54.7	55
Total Right of Way Items	4.7	4.5	4.7	4.3
Total Project Capital Outlay Costs	57.5	55.4	59.4	59.3

**Structure items assumes structure types 1C, 2C, 3B & 4B for Alternatives 1, 2, 3, & 4, respectively*
Note: Costs in millions of dollars

6A. ALTERNATIVE DESCRIPTIONS

The following "build" alternatives are being evaluated to replace the Salmon Creek Bridge. All proposed replacement structures consist of two 12-foot travel lanes, two 8-foot shoulders, and a 5-foot pedestrian walkway (with barrier) on the west side of the structure. Two 4-foot shoulders are proposed for the approach roadway. Typical Sections, Project Layouts, and Structures Advance Planning Studies (APS) are included as Attachments B, C, and D, respectively.

All alternatives consist of ADA improvements, asphalt concrete overlays, new structural section off the existing centerline, new structural section at locations where the vertical profile is raised or lowered to accommodate improved vertical curvature. Details of new structural section are provided in the Preliminary Materials Recommendation and are included as Attachment G.

All alternatives provide paved access from the west-side pedestrian walkway to the roadway shoulder in compliance with DIB 82-03.

Seven culverts are proposed for modification or replacement within project limits. Details of culvert work will be determined during the PA& ED phase of the project. In addition to culvert modification and replacement, the project proposes other drainage improvements which include overside drains, rock slope protection, ditches, ac dikes.

See Table 6.A.1 for locations of potential culvert work.

Table 6. A.1. Existing Culverts - Potential Culvert Work Table

PM	Diameter (in) (existing)	Length (ft) (existing)	Type (existing)
42.53	24	56	CSP
42.54	24	38	RCP
42.56	18	52	RCP
42.63	36	105	RCP
42.85	18	40	RCP
42.95	18	42	RCP
43.00	100 (total height) 96 (total width)	Width of Bridge	Animal Crossing Box Culvert
43.13	18	65	RCP

6A1. ALTERNATIVE 1 – WEST ALIGNMENT (1A, 1B, 1C, 1D)

The scope of work for Alternative 1 includes replacement of the Salmon Creek Bridge, two retaining walls, and all the scope indicated in the Alternative Descriptions section. This alignment is located west and clear of the existing Salmon Creek Bridge. The replacement structure is 770 to 800 feet long, 131 to 141 feet high, and is located on a 1,000-foot vertical sag curve. This alternative will likely allow two traffic lanes to remain open during most of the construction. The proposed centerline for Alternative 1, at the location of the Salmon Creek Bridge, is 53 feet offset west and parallels the existing bridge alignment.

To the south of the existing structure, the Nonella Lane (PM 42.69) at-grade intersection and the private driveway access at PM 42.66 will be shifted west due to a proposed 10,000-foot horizontal curve between PM 42.61 and 42.79 in the realigned roadway. The Pacific Reefs Road (PM 42.96) at-grade intersection will be shifted west also due to realignment of the roadway.

Two retaining walls are proposed for this alternative. A 160-foot long, 4-foot to 30-foot high retaining wall is proposed between PM 42.96 and 42.99 on the west side of the roadway to avoid impacts to the adjacent property. A 570-foot long, 4-foot to 10-foot high retaining wall is proposed between PM 43.18 and 43.28 on the west side of the roadway to provide a pullout area and standard stopping sight distance for the horizontal curve.

Four structure types were proposed for this alignment (1A, 1B, 1C, and 1D) as shown in Table 6.A.1.1.

Table 6. A.1.1. Alternative 1 Structure Summary Table *(2016/2017 fiscal year)*

Alternative	Structure Type	Total Structure Cost (millions of dollars)
1A	4-Span Haunched Cast-in-Place Prestressed Concrete Box Girder	31.5
1B	5-Span Cast-in-Place Concrete Arch	38.0
1C	3-Span Cast-in-Place Concrete Arch	35.7
1D	20-Span Cast-in-Place Reinforced Concrete Slab on Open Spandrel Concrete Arch	31.7

Note: Total structure costs includes structure and demolition costs
Escalated values are calculated at 3.5% for 5.0 years

The total cost for Alternative 1, assuming programming structure 1C, is $57.5 million (2016/2017 fiscal year), which includes $17.1 million for roadway items, $35.7 million for structures items, and $4.7 million for right of way items. A cost estimate for Alternative 1 is included as Attachment E.

6A2. ALTERNATIVE 2 – EAST ALIGNMENT (2A, 2B, 2C, 2D)

The scope of work for Alternative 2 includes replacement of the Salmon Creek Bridge and all the scope indicated in the Alternative Descriptions section. This alignment is located east and clear of the existing Salmon Creek Bridge. The replacement structure is 700 to 720 feet long, 131 to 138 feet high, and is located on a 1,000-foot vertical sag curve. This alternative will allow two traffic lanes to remain open during most of the construction. The proposed centerline for Alternative 2, at the location of the Salmon Creek Bridge, is 50 feet offset east and parallels the existing bridge alignment.

To the south of the existing structure, the Nonella Lane (PM 42.69) at-grade intersection and the private driveway access at PM 42.66 will be shifted east due to a proposed 6,000-foot horizontal curve between PM 42.44 and 42.55 in the realigned roadway. The Pacific Reefs Road (PM 42.96) at-grade intersection will be shifted east also due to realignment of the roadway.

Four structure types were proposed for this alignment (2A, 2B, 2C, and 2D) as shown in Table 6.A.2.1.

Table 6. A.2.1. Alternative 1 Structure Summary Table *(2016/2017 fiscal year)*

Alternative	Structure Type	Total Structure Cost (millions of dollars)
2A	3-Span Haunched Cast-in-Place Prestressed Concrete Box Girder	24.0
2B	5-Span Cast-in-Place Concrete Arch	33.6
2C	3-Span Cast-in-Place Concrete Arch	33.7
2D	20-Span Cast-in-Place Reinforced Concrete Slab on Open Spandrel Concrete Arch	28.5

Note: Total structure costs includes structure and demolition costs
Escalated values are calculated at 3.5% for 5.0 years

The total cost for Alternative 2, assuming programming structure 2C, is $55.4 million (2016/2017 fiscal year), which includes $17.2 million for roadway items, $33.7 million for structures items, and $4.5 million for right of way items. A cost estimate for Alternative 2 is included as Attachment E.

6A3. ALTERNATIVE 3 – WEST ON EXISTING ALIGNMENT (3A, 3B)

The scope of work for Alternative 3 includes replacement of the Salmon Creek Bridge, one retaining wall, and all the scope indicated in the Alternative Descriptions section. This alignment is located somewhat west and on the existing Salmon Creek Bridge. The proposed replacement structure will be constructed in stages, and is 700 feet long, 131 to 137 feet high, and is located on a 1,000-foot vertical sag curve. This alternative will require one-way reversible traffic for three seasons for the second stage of construction. The proposed centerline for Alternative 3, at the location of the Salmon Creek Bridge, is 17 feet offset west and parallels the existing bridge alignment.

To the south of the existing structure, the Nonella Lane (PM 42.69) at-grade intersection and the private driveway access at PM 42.66 will be shifted west due to a proposed 10,000-foot horizontal curve between PM 42.54 and 42.72 in the realigned roadway. The Pacific Reefs Road (PM 42.96) at-grade intersection will be shifted west also due to realignment of the roadway.

One retaining wall is proposed for this alternative. A 550-foot long, 4-foot to 10-foot high retaining wall is proposed between PM 43.18 and 43.28 on the west side of the roadway to provide a pullout area and standard stopping sight distance for the horizontal curve.

Two structure types were proposed for this alignment (3A and 3B) as shown in Table 6.A.3.1

Table 6. A.3.1. Alternative 1 Structure Summary Table *(2016/2017 fiscal year)*

Alternative	Structure Type	Total Structure Cost (millions of dollars)
3A	Staged 3-Span Haunched Cast-in-Place Prestressed Concrete Box Girder	30.2
3B	Staged 5-Span Cast-in-Place Concrete Arch	36.9

Note: Total structure costs includes structure and demolition costs
Escalated values are calculated at 3.5% for 5.0 years

The total cost for Alternative 3, assuming programming structure 3B, is $59.4 million (2016/2017 fiscal year), which includes $17.8 million for roadway items, $36.9 million for structures items, and $4.7 million for right of way items. A cost estimate for Alternative 3 is included as Attachment E.

6A4. ALTERNATIVE 4 – EAST ON EXISTING ALIGNMENT (4A, 4B)

The scope of work for Alternative 4 includes replacement of the Salmon Creek Bridge and all the scope indicated in the Alternative Descriptions section. This alignment is located somewhat east and on the existing Salmon Creek Bridge. The proposed replacement structure will be constructed in stages, and is 700 feet long, 131 to 138 feet high, and is located on a 1,000-foot vertical sag curve. This alternative will require one-way reversible traffic for three seasons for the second stage of construction. The proposed centerline for Alternative 4, at the location of the Salmon Creek Bridge, is 23 feet offset east and parallels the existing bridge alignment.

To the south of the existing structure, the Nonella Lane (PM 42.69) at-grade intersection and the private driveway access at PM 42.66 will be shifted east due to a proposed 10,000-foot horizontal curve between PM 42.46 and 42.64 in the realigned roadway. The Pacific Reefs Road (PM 42.96) at-grade intersection will be shifted east also due to realignment of the roadway.

Two structure types were proposed for this alignment (4A and 4B) as shown in Table 6.A.4.1

Table 6. A.4.1. Alternative 1 Structure Summary Table		*(2016/2017 fiscal year)*
Alternative	Structure Type	Total Structure Cost (millions of dollars)
4A	Staged 3-Span Haunched Cast-in-Place Prestressed Concrete Box Girder	30.2
4B	Staged 5-Span Cast-in-Place Concrete Arch	36.9
Note: Total structure costs includes structure and demolition costs Escalated values are calculated at 3.5% for 5.0 years		

The total cost for Alternative 4, assuming programming structure 4B, is $59.3 million (2016/2017 fiscal year), which includes $18.1 million for roadway items, $36.9 million for structures items, and $4.3 million for right of way items. A cost estimate for Alternative 4 is included as Attachment E.

6A4. NO BUILD ALTERNATIVE

The "no build" alternative was also considered, but did not meet the purpose and need of the project.

6B. FUTURE STUDIES

At a public informational meeting on May 7th, 2009 several of those attending indicated a preference for rehabilitating the existing structure on its current alignment rather than replacement on another alignment. At the next phase of the project the design team will review the feasibility, cost, and service life of rehabilitating the existing structure as compared to the cost of constructing a new bridge. Non-redundancy of the existing structure will pose a challenge for the design team when reviewing the feasibility of rehabilitating the existing structure.

6C. DESIGN EXCEPTIONS

The following mandatory design exceptions have been executed:

- Shoulder widths (DIB 79-03) between PM 42.4 and 43.3

6D. AGENCY INVOLVEMENT

Various permits and approvals will be necessary after Project Approval and Environmental Document (PA&ED), and will likely involve California Department of Fish and Game (1602 Streambed Alteration Permit), U. S. Army Corps of Engineers (Section 404), U. S. Coast Guard (Section 15 Nationwide Permit),

California Regional Water Quality Control Board (Section 401), U.S. Fish and Wildlife Service (Section 7), National Marine Fisheries, and a California State Coastal Commission Development Permit. The County of Mendocino will also be involved in the project as it relates to the overlay of Spring Grove Road.

6E. HAZARDOUS WASTE

A November 14, 2008 Initial Site Assessment (ISA) indicates that a Preliminary Site Investigation (PSI) including a structural survey will be required for the existing structure. See Attachment H for a copy of the ISA. It is estimated that it will take 3 to 5 months to complete the site investigation and prepare the final report. The final report should be completed during the PA&ED phase of the project.

6F. GEOTECHNICAL

The Office of Geotechnical Design North evaluated the site conditions and geology on November 24, 2008, which included review of the As-Built Plans, Bridge Inspection Reports, available geologic literature mapping, the Geotechnical Design bridge file, and Log of Test Borings (LOTBs).

The site consists of sandstone, shale, and conglomerate sedimentary rocks. Ground water is expected to be at river level and may fluctuate due to seasonal fluctuations and tidal influence. The potential for surface rupture at the site due to fault movement of the controlling San Andreas/North fault, located about 5.6 miles southwest of the site, is insignificant as there are no known faults projecting towards or passing directly through the project site. Due to a lack of detailed granular soil characteristics, a detailed liquefaction analysis was not performed. There is a moderate to high liquifation potential in the upper loose granular layers during a seismic event. Peak Bedrock Acceleration is estimated at 0.5g. A future subsurface investigation will need to be completed prior to final seismic design recommendations, which should be requested by the Office of Bridge Design North during the PA&ED phase of the project.

6G. DISPOSAL SITE AND IMPORTED BORROW DISPOSAL

Material disposal is anticipated for all "build" alternatives. One optional disposal site that could be used for excess project material is the Beacon disposal site located on Route 1 at PM 33.8.

6H. HIGHWAY PLANTING

The Landscape Architectural Assessment Sheet (LAAS) prepared for this project indicates that revegetation is required, and highway planting is not warranted (see Attachment I). The LAAS recommends highway aesthetic treatment and will require further evaluations during PA&ED.

6I. STORM WATER COMPLIANCE

A Storm Water Data Report has been prepared for this project and is included in Attachment J. The disturbed areas will be primarily from the road access and construction equipment pad, excavation for bridge pier footings and abutments, removal of existing bridge pier footings and abutments, and roadway fill and excavation. This project is not located within an urban MS4 area.

Salmon Creek is not a 303(d) listed waterbody. The North Coast Regional Water Quality Control Board has jurisdiction in the project area. Given that the project will increase the impervious surface in the project area, treatment best management practices (BMPs) will be required to address pollutant loading and hydromodification. Environmental recommends that scuppers be eliminated from the bridge if at all possible, if not, the scuppers should drain to land rather than the active channel. Off site treatment could be required if treatment BMPs are not feasible on site. The need for additional Right of Way should be evaluated early during project development so that there is adequate space for incorporation of treatment BMPs. If Caltrans is unable to commit to placement of treatment BMPs during the PA/ED phase, the additional sources of polluted runoff should be identified as an impact that would require mitigation to a less than significant level. A water quality study should be prepared.

6J. PRELIMINARY FLOODPLAIN ANALYSIS

On November 18, 2008, a Floodplain Analysis and Floodplain Evaluation Report Summary (FERS) was prepared for the proposed project. The project is located in FEMA Designated Zone A with a 1% annual chance of flooding except for the bridge abutments, which are located in Zone C, "Areas of minimal flooding".

The total increased impervious surface area within project limits ranges from 1.5 acres to 2.2 acres. The maximum increase of impervious surface area is 0.03% of the total Salmon Creek watershed area. Thus, it is not anticipated that the project will impact the 100 year floodplain. Once the final bridge design is complete, further evaluation of the existing and proposed in-water structures should be performed to determine if the 100-year floodplain will be affected by the project.

6K. RIGHT OF WAY

A Right of Way Data Sheet was prepared for the project and is included in Attachment K. See Table 6.K.1 for a summary of Right of Way item costs for all "build" alternatives.

Table 6. K.1. Right of Way Item Summary Table *(2016/2017 fiscal year)*

Right of Way Item	Right of Way Item Cost			
	Alternative 1	Alternative 2	Alternative 3	Alternative 4
Acquisition (Including Excess Lands)	$1,769,893	$1,636,811	$1,783,168	$1,394,822
Mitigation Acquisition & Credits	$2,853,907	$2,853,907	$2,853,907	$2,853,907
Project Development Permit Fees	$12,972	$12,972	$12,972	$12,972
Utility Relocation (State Share)	0	0	0	0
Relocation Assistance (RAP)	0	0	0	0
Clearance/Demolition	0	0	0	0
Title and Escrow Fees	$1,153	$13,837	$18,449	$17,296
Construction Contract Work	0	0	0	0
Total	$4.7 million	$4.5 million	$4.7 million	$4.3 million

Note: Escalated value is calculated at 5.0% for 4.5 years

Right of Way lead time will require a minimum of 17 months after submitting appraisal maps, utility conflict maps, and the necessary environmental clearance has been obtained. In addition, a minimum of 14 months will be required after submitting the last appraisal map for certification.

6L. UTILITY INVOLVEMENT

Overhead electrical and telephone lines/poles are in conflict with this project. Utility relocation will be required and the proposed location of utilities is alternative dependant. PG&E notes that acquisition of additional land rights will need to be executed for relocation of utility facilities. See Table 6.L.1 for a list of potential conflicting utilities for all "build" alternatives.

Table 6. L.1. Potential Conflicting Utilities

Type	PM	Offset	Alt 1	Alt 2	Alt 3	Alt 4
Lines/Pole	42.69	LT	X	X	X	X
Lines/Pole	42.71	LT	X	X	X	X
Lines/Pole	42.76	LT	X		X	X
Lines/Pole	42.84	LT	X		X	
Lines/Pole	41.87	LT	X		X	
Lines/Pole	42.92	LT	X		X	
Lines/Pole	42.97	RT		X		X
Lines/Pole	42.98	RT	X	X	X	X
Lines/Pole	43.00	RT	X	X	X	X
Lines/Pole	43.14	RT		X		X
Lines/Pole	43.15	LT	X		X	X

Lines/Pole	43.17	RT		X	X	X
Lines/Pole	43.20	LT	X		X	
Lines/Pole	43.21	RT		X		X
Lines/Pole	43.23	LT	X	X	X	
Lines/Pole	43.24	RT		X	X	X
Lines/Pole	43.26	RT	X	X	X	X
Lines/Pole	43.28	LT	X	X	X	X
Lines/Pole	43.35	LT	X	X	X	X

6M. SALVAGING AND RECYCLING OF HARDWARE AND OTHER NON-RENEWABLE RESOURCES

Measures to salvage and recycle materials will be determined during the PS&E phase of this project. Possible items for salvage include drainage grates, corrugated steel pipe (CSP), and metal beam guardrail (MBGR) materials.

6N. RECYCLED MATERIALS

No asphalt recycling is planned for this project. See Attachment G for a copy of the Preliminary Materials Recommendation.

6O. CONSEQUENCES OF THE NO-BUILD OPTION

In the event the "no-build" alternative is chosen the existing structure will continue to deteriorate and no geometric improvement would be made.

6P. COMMUNITY INVOLVEMENT

A public informational meeting was held on May 7, 2009 in the town of Mendocino, CA. Public comments from the meeting are summarized below.

Locals are concerned that traffic handling could affect their mobility. The community suggested one-way traffic control should be maintained at all times or construction of a temporary detour bridge across the channel should be used during construction.

7. TRAFFIC MANAGEMENT AND CONSTRUCTION STAGING

A Transportation Management Plan [April 3, 2009 (TMP)] was prepared for this project. See Attachment L for a copy of the TMP. One-way traffic control shall be in accordance with the Caltrans Standard Plan T-13. The TMP indicates that a minimum 14-foot-wide

roadway to accommodate vehicular traffic is required at all times. Bicycles will be accommodated through the work zone by providing a 4-foot paved shoulder. The District Permits Engineer will be notified by the Resident Engineer upon receipt of notice that the roadway width for direction of travel will be less than 16 feet.

Traffic control measures in the California Manual on Uniform Traffic Control Devices (MUTCD 6D) will be incorporated to accommodate disabled pedestrians through the work zone. The maximum length of one-way traffic control closure is 1,700 feet.

The construction durations for Alternatives 1 (west) and 2 (east) are anticipated to be three seasons, which is comprised of two seasons for construction of the replacement structure and one season for demolition of the existing structure. The construction duration for Alternatives 3 (west on existing alignment) and 4 (east on the existing alignment) are anticipated to be five seasons, which is comprised of two seasons for construction of half of the replacement structure, one season for demolition of the existing structure, and two seasons for construction of the remaining half of the replacement structure. Three seasons of one-way traffic control is anticipated for Alternatives 3 and 4.

8. ENVIRONMENTAL DETERMINATION/DOCUMENT

In order to identify environmental issues, constraints, costs and resource needs, the North Region Office of Environmental Planning Branch (M-3) prepared a Preliminary Environmental Analysis Report (PEAR) for the project (see Attachment M for a copy). Preliminary studies consisted of field surveys and a review of records and databases. Based on current information, it is anticipated that the environmental document is an Initial Study/Negative Declaration pursuant to the California Environmental Quality Act (CEQA) and a Routine Environmental Assessment/Finding of No Significant Impact (FONSI) pursuant to the National Environmental Policy Act (NEPA).

Potential impacts requiring further study include:

- Biological Resources
- Cultural Resources
- Community Impacts
- Water Quality
- Hazardous Waste
- Visual Quality
- Floodplain Hydrology Report
- Geotechnical Study and Report

Permission to enter permits will be necessary to enter properties for environmental surveys. It is estimated that completion of the environmental process will require up to 48

months from the submittal date of the Environmental Study Request, which is currently scheduled for September 2010. It should be noted that because of unforeseen delays and issues that may occur during coordination with federal resource agencies, the time required to attain environmental approval could change considerably. A matrix identifying resources needed to complete environmental studies is included.

Field surveys for sensitive plant and wildlife species must be conducted between February 15 and August 15. Formal consultation and/or coordination with the California Fish and Game, Army Corp of Engineers and the Regional Water Quality Control Board permits could take up to 12 months to obtain.

It will take between 6-15 months to comply with Section 106 of the National Historic Preservation Act, if required. If archaeological resources are identified and found to be eligible for National Historic listing, the schedule for completing Section 106, the timeline could be extended another two years.

A Water Quality Analysis is needed and coordination with the State Resources Control Board may be required. A Visual Impact Assessment will be required to determine impacts to scenic resources.

9. FUNDING

9A. COST ESTIMATE

It is proposed that this project be funded from the 210.110 Bridge Rehabilitation Program in the 2010 SHOPP cycle as a long lead project. Additional alternatives may be added in the next phase of the project, and no alternative has been selected. However, Alternative 4 (east on existing alignment) incorporating structure type 4B will be used for programming purposes. A cost estimate for each alternative is included as Attachment E.

9B. PROJECT SUPPORT

A Programming Sheet has been prepared for this project and is included as Attachment N.

9C. PROJECT SCHEDULE

HQ Milestones	Delivery Date
Begin Environmental	09/01/10
Circulate DED	06/01/14
PA & ED	10/01/14
Project PS&E	07/01/16
Right of Way Certification	01/01/17
Ready to List	01/15/17
Approve Contract	07/15/17
Contract Acceptance	08/01/19
End Project	08/01/19

10. FHWA COORDINATION

No FHWA action is required for this project.

11. VALUE ANALYSIS

Since the construction plus support cost for this project exceeds $25 million, a Value Analysis will need to be performed for this project during the PA&ED phase

12. FIELD REVIEW ROSTER

NAME	UNIT	TELEPHONE	DATES
Jeffrey Pimentel	Advance Planning	(707) 445-6358	Jan. 2009
Valency Langtry	Advance Planning	(707) 445-5208	July 2008
Johnathon Jackson	Advance Planning	(707) 441-2059	July 2008 & Jan. 2009
Fernando Manzanera	Hydraulics	(707) 445-5322	Oct. 2008
Brett Benson	Right of Way	(707) 445-6691	Feb. 2009

13. PROJECT REVIEWS

D1 - 201.110 Program Advisor	Takako Fujioka	Date	6/24/09
D1 - Traffic Safety Review	Nicole Braafladt	Date	6/24/09
D1 - Safety Review	Steven Hughes	Date	6/24/09
District Maintenance	Curtis Coburn	Date	6/24/09
NR - Constructability Review	Heidi Quintrell	Date	6/24/09
HQ - Design & Local Programs	J. Steele/H. Sykes	Date	6/24/09
HQ - Structures	Steve Wiman	Date	6/24/09

14. ATTACHMENTS

A. Vicinity Map
B. Typical Sections
C. Project Layouts
D. Structure Advance Planning Study (APS)
E. Cost Estimate
F. Bridge Inspection Report
G. Preliminary Materials Recommendation
H. Initial Site Assessment (ISA)
I. Landscape Architectural Assessment Sheet (LAAS)
J. Storm Water Data Report
K. Right of Way Data Sheet
L. Transportation Management Plan (TMP)
M. Preliminary Environmental Assessment Report (PEAR)
N. Programming Sheet

ATTACHMENT A

VICINITY MAP

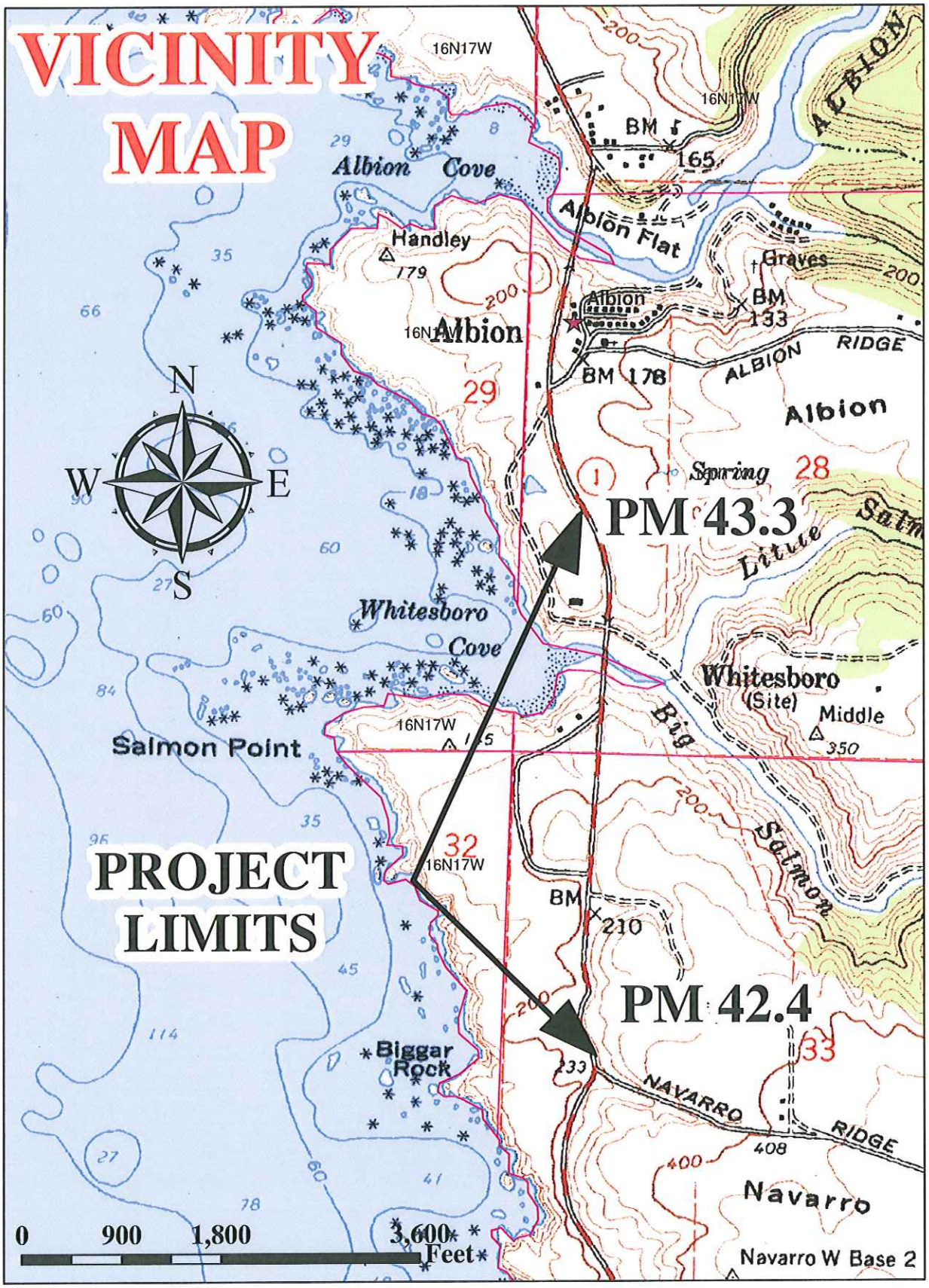
VICINITY MAP
PROJECT LIMITS
PM 43.3
PM 42.4
N
S
E
W
Albion Cove
Handley
Albion
Albion Flat
Graves
BM 133
BM 178
ALBION RIDGE
Spring
Little
Whitesboro Cove
Whitesboro (Site)
Middle
Big
Salmon
Salmon Point
Biggar Rock
NAVARRO RIDGE
Navarro
Navarro W Base 2
16N17W
0 900 1,800 3,600 Feet

ATTACHMENT B

TYPICAL SECTIONS

Dist	COUNTY	ROUTE	POST MILES TOTAL PROJECT	SHEET No.	TOTAL SHEETS
01	MEN	1	42.4/43.3	1	5

REGISTERED CIVIL ENGINEER DATE

PLANS APPROVAL DATE

REGISTERED PROFESSIONAL ENGINEER No. Exp. CIVIL STATE OF CALIFORNIA

THE STATE OF CALIFORNIA OR ITS OFFICERS OR AGENTS SHALL NOT BE RESPONSIBLE FOR THE ACCURACY OR COMPLETENESS OF ELECTRONIC COPIES OF THIS PLAN SHEET.

ALTERNATIVE 1

01-40140K-MEN-1 PM 42.4/ 43.3

SALMON CREEK BRIDGE REPLACEMENT

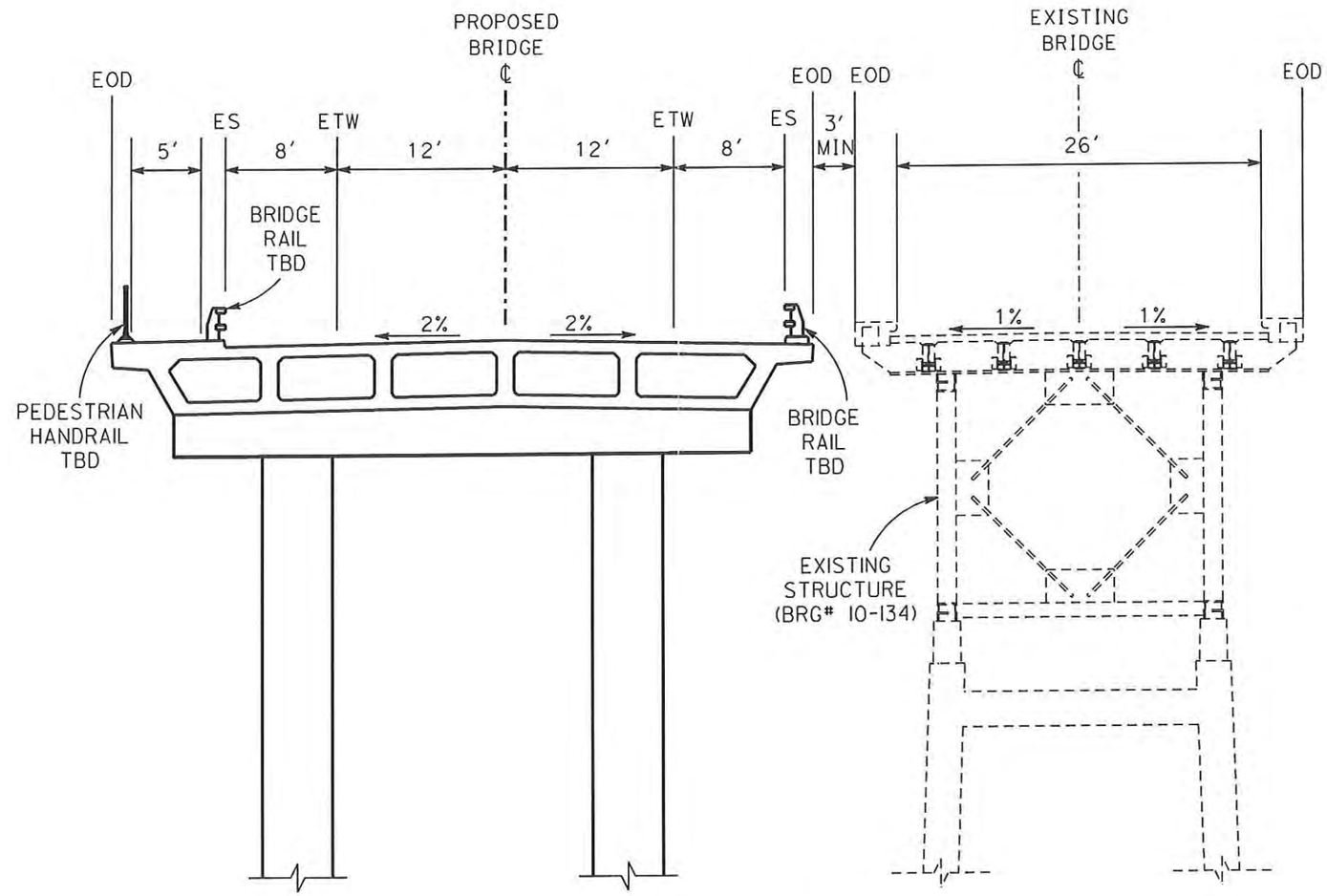

EOD = EDGE OF DECK

NO SCALE

ALL DIMENSIONS ARE IN FEET
UNLESS OTHERWISE SHOWN

PROPOSED BRIDGE SECTION FOR ALTERNATIVE 1
(PEDESTRIAN WALKWAY ON WEST SIDE)

STRUCTURE TYPICAL SECTION

FOR PLANNING PURPOSES ONLY

REVISED BY | DATE REVISED

CALCULATED-DESIGNED BY | CHECKED BY

FUNCTIONAL SUPERVISOR

STATE OF CALIFORNIA - DEPARTMENT OF TRANSPORTATION

Caltrans

LASST REVISION 00-00-00 | DATE PLOTTED => $DATE | TIME PLOTTED => $TIME

Dist	COUNTY	ROUTE	POST MILES TOTAL PROJECT	SHEET No.	TOTAL SHEETS
01	MEN	1	42.4/43.3	2	5

REGISTERED CIVIL ENGINEER DATE

PLANS APPROVAL DATE

REGISTERED PROFESSIONAL ENGINEER No. Exp. CIVIL STATE OF CALIFORNIA

THE STATE OF CALIFORNIA OR ITS OFFICERS OR AGENTS SHALL NOT BE RESPONSIBLE FOR THE ACCURACY OR COMPLETENESS OF ELECTRONIC COPIES OF THIS PLAN SHEET.

ALTERNATIVE 2

01-40140K-MEN-1 PM 42.4/43.3

SALMON CREEK BRIDGE REPLACEMENT

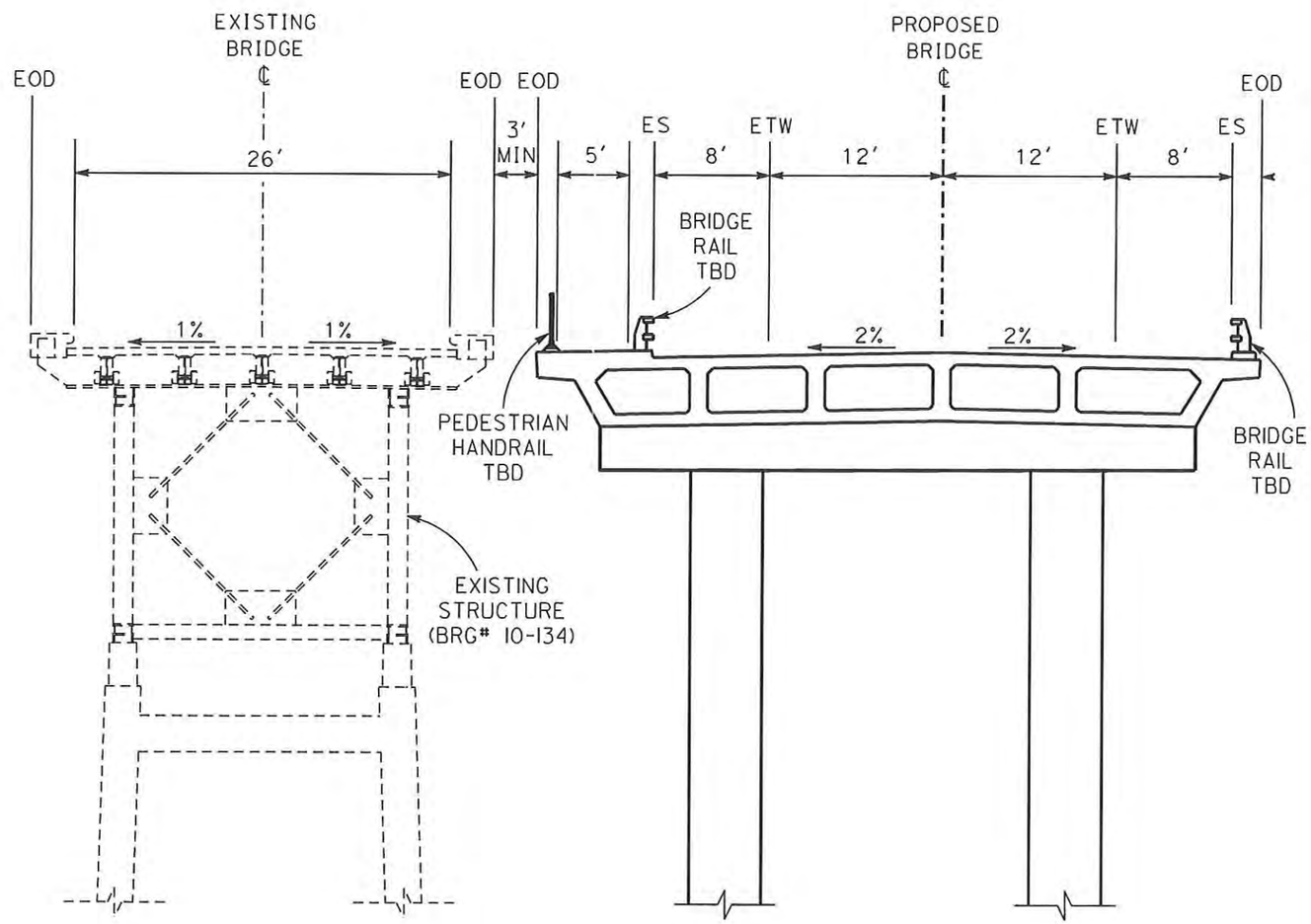

EOD = EDGE OF DECK

NO SCALE

ALL DIMENSIONS ARE IN FEET
UNLESS OTHERWISE SHOWN

PROPOSED BRIDGE SECTION FOR ALTERNATIVE 2
(PEDESTRIAN WALKWAY ON WEST SIDE)

STRUCTURE TYPICAL SECTION

FOR PLANNING PURPOSES ONLY

REVISED BY | DATE REVISED

CALCULATED-DESIGNED BY | CHECKED BY

FUNCTIONAL SUPERVISOR

STATE OF CALIFORNIA - DEPARTMENT OF TRANSPORTATION

Caltrans

LAST REVISION 00-00-00 | DATE PLOTTED => $DATE | TIME PLOTTED => $TIME

Dist	COUNTY	ROUTE	POST MILES TOTAL PROJECT	SHEET No.	TOTAL SHEETS
01	MEN	1	42.4/43.3	3	5

REGISTERED CIVIL ENGINEER DATE

PLANS APPROVAL DATE

REGISTERED PROFESSIONAL ENGINEER NO. EXP. CIVIL STATE OF CALIFORNIA

THE STATE OF CALIFORNIA OR ITS OFFICERS OR AGENTS SHALL NOT BE RESPONSIBLE FOR THE ACCURACY OR COMPLETENESS OF ELECTRONIC COPIES OF THIS PLAN SHEET.

ALTERNATIVE 3

01-40140K-MEN-1 PM 42.4/43.3

SALMON CREEK BRIDGE REPLACEMENT

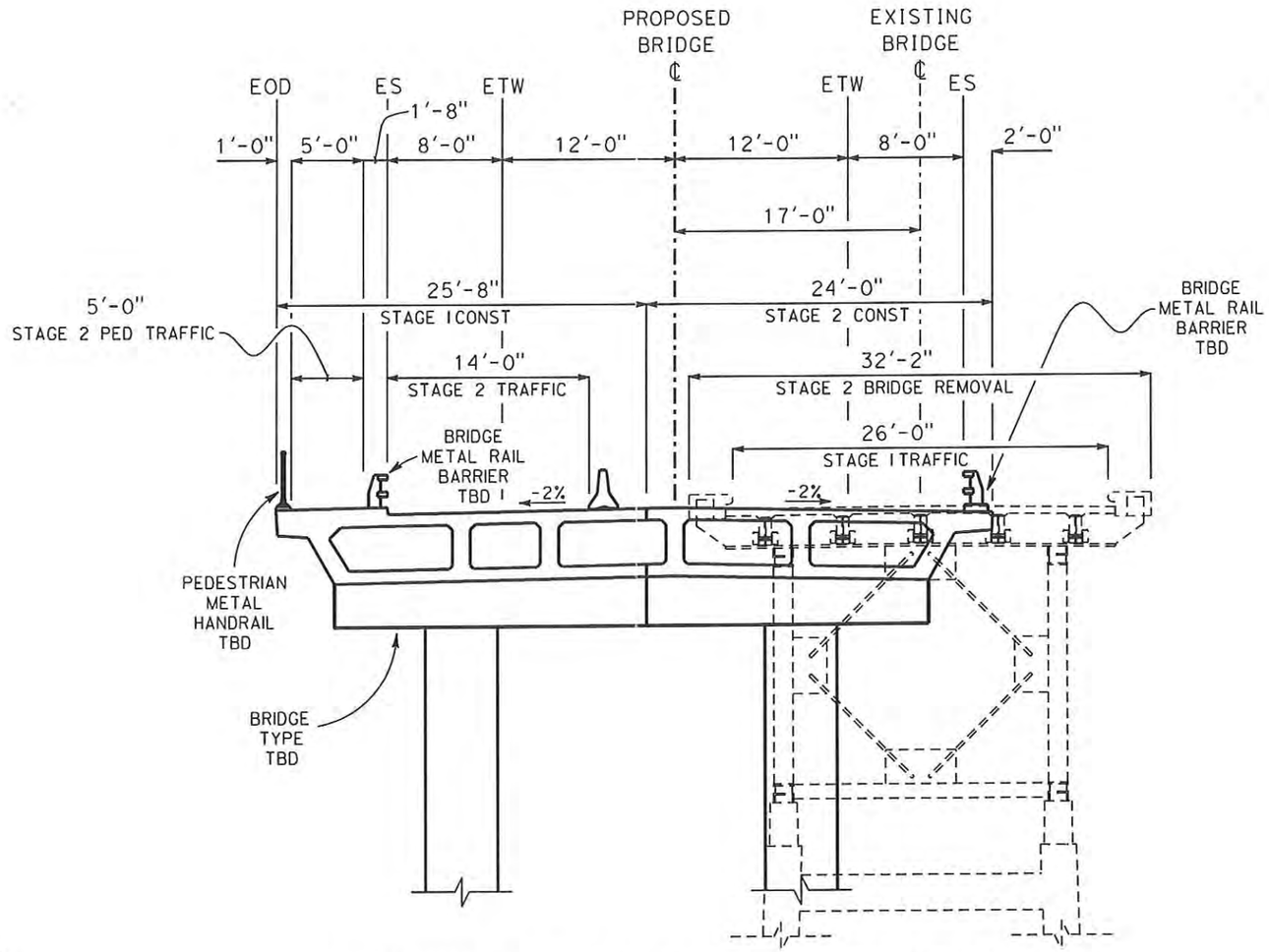

EOD = EDGE OF DECK

NO SCALE

ALL DIMENSIONS ARE IN FEET
UNLESS OTHERWISE SHOWN

PROPOSED BRIDGE SECTION FOR ALTERNATIVE 3
(PEDESTRIAN WALKWAY ON WEST SIDE)

STRUCTURE TYPICAL SECTION

FOR PLANNING PURPOSES ONLY

REVISED BY | DATE REVISED

CALCULATED-DESIGNED BY | CHECKED BY

FUNCTIONAL SUPERVISOR

STATE OF CALIFORNIA - DEPARTMENT OF TRANSPORTATION

Caltrans

LAST REVISION 00-00-00 | DATE PLOTTED => $DATE | TIME PLOTTED => $TIME

Dist	COUNTY	ROUTE	POST MILES TOTAL PROJECT	SHEET No.	TOTAL SHEETS
01	MEN	1	42.4/43.3	4	5

REGISTERED CIVIL ENGINEER DATE

PLANS APPROVAL DATE

REGISTERED PROFESSIONAL ENGINEER No. Exp. CIVIL STATE OF CALIFORNIA

THE STATE OF CALIFORNIA OR ITS OFFICERS OR AGENTS SHALL NOT BE RESPONSIBLE FOR THE ACCURACY OR COMPLETENESS OF ELECTRONIC COPIES OF THIS PLAN SHEET.

ALTERNATIVE 4

01-40140K-MEN-1 PM 42.4/43.3

SALMON CREEK BRIDGE REPLACEMENT

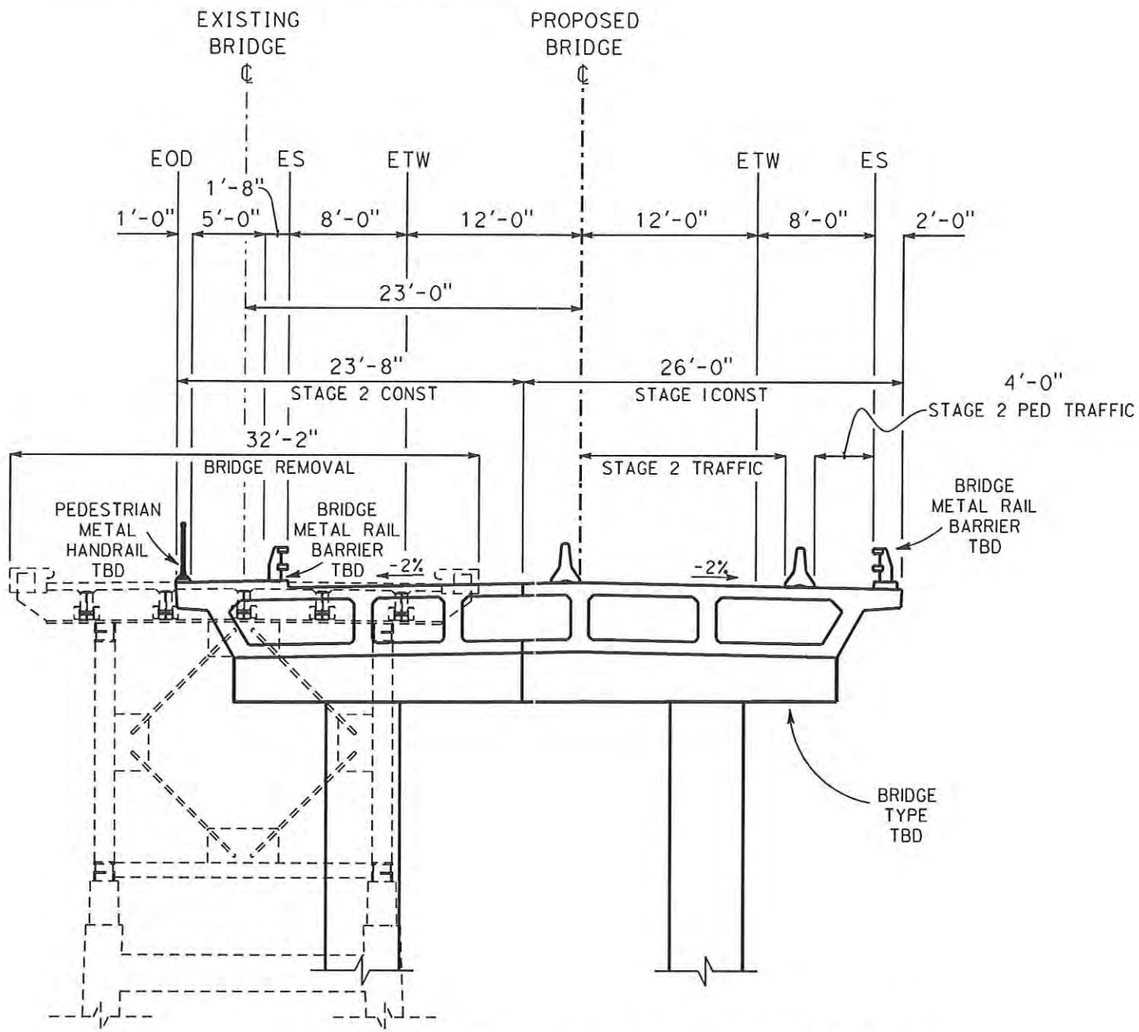

EOD = EDGE OF DECK

NO SCALE

ALL DIMENSIONS ARE IN FEET
UNLESS OTHERWISE SHOWN

PROPOSED BRIDGE SECTION FOR ALTERNATIVE 4
(PEDESTRIAN WALKWAY ON WEST SIDE)

STRUCTURE TYPICAL SECTION

FOR PLANNING PURPOSES ONLY

REVISED BY | DATE REVISED

CALCULATED-DESIGNED BY | CHECKED BY

FUNCTIONAL SUPERVISOR

STATE OF CALIFORNIA - DEPARTMENT OF TRANSPORTATION

Caltrans

LAST REVISION 00-00-00 | DATE PLOTTED => $DATE | TIME PLOTTED => $TIME

Dist	COUNTY	ROUTE	POST MILES TOTAL PROJECT	SHEET No.	TOTAL SHEETS
01	MEN	1	42.4/43.3	5	5

REGISTERED CIVIL ENGINEER DATE

PLANS APPROVAL DATE

REGISTERED PROFESSIONAL ENGINEER No. Exp. CIVIL STATE OF CALIFORNIA

THE STATE OF CALIFORNIA OR ITS OFFICERS OR AGENTS SHALL NOT BE RESPONSIBLE FOR THE ACCURACY OR COMPLETENESS OF ELECTRONIC COPIES OF THIS PLAN SHEET.

ALTERNATIVES 1 - 4

01-40140K-MEN-1 PM 42.4/43.3

SALMON CREEK BRIDGE REPLACEMENT

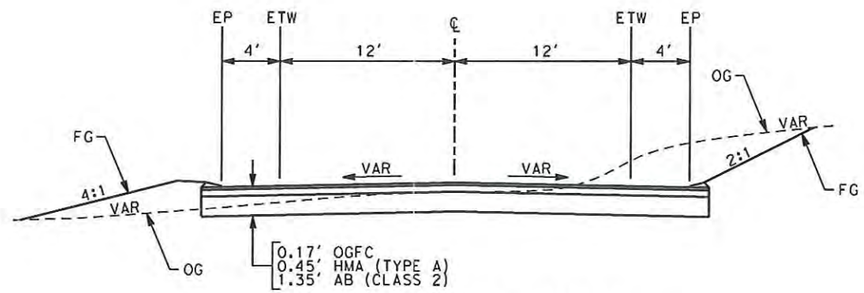

SR 1 (NEW ROAD SECTION)

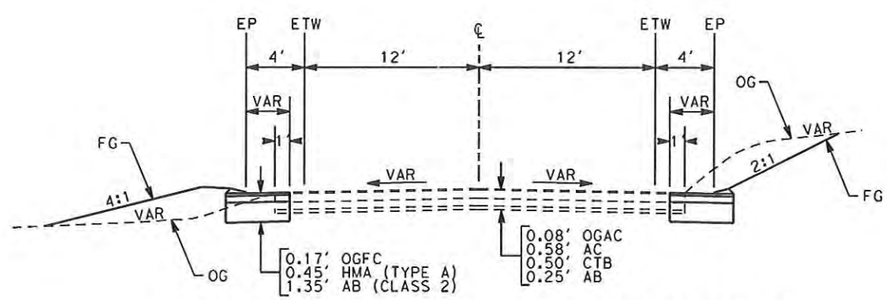

SR 1 (WIDENING OF EXISTING ROAD SECTION)

NO SCALE

ALL DIMENSIONS ARE IN FEET
UNLESS OTHERWISE SHOWN

ROADWAY TYPICAL SECTION

FOR PLANNING PURPOSES ONLY

REVISED BY | DATE REVISED

CALCULATED-DESIGNED BY | CHECKED BY

FUNCTIONAL SUPERVISOR

STATE OF CALIFORNIA - DEPARTMENT OF TRANSPORTATION

LAST REVISION 00-00-00 | DATE PLOTTED => $DATE | TIME PLOTTED => $TIME

ATTACHMENT C

PROJECT LAYOUTS

Dist	COUNTY	ROUTE	POST MILES TOTAL PROJECT	SHEET No.	TOTAL SHEETS
1	MEN	1	42.4 / 43.3	1	4

REGISTERED CIVIL ENGINEER DATE

PLANS APPROVAL DATE

REGISTERED PROFESSIONAL ENGINEER No. Exp. CIVIL STATE OF CALIFORNIA

THE STATE OF CALIFORNIA OR ITS OFFICERS OR AGENTS SHALL NOT BE RESPONSIBLE FOR THE ACCURACY OR COMPLETENESS OF ELECTRONIC COPIES OF THIS PLAN SHEET.

0 100 200 400 600 800

N

ALTERNATIVE 1

01-40140K-MEN-1 PM 42.4/43.3

SALMON CREEK BRIDGE REPLACEMENT

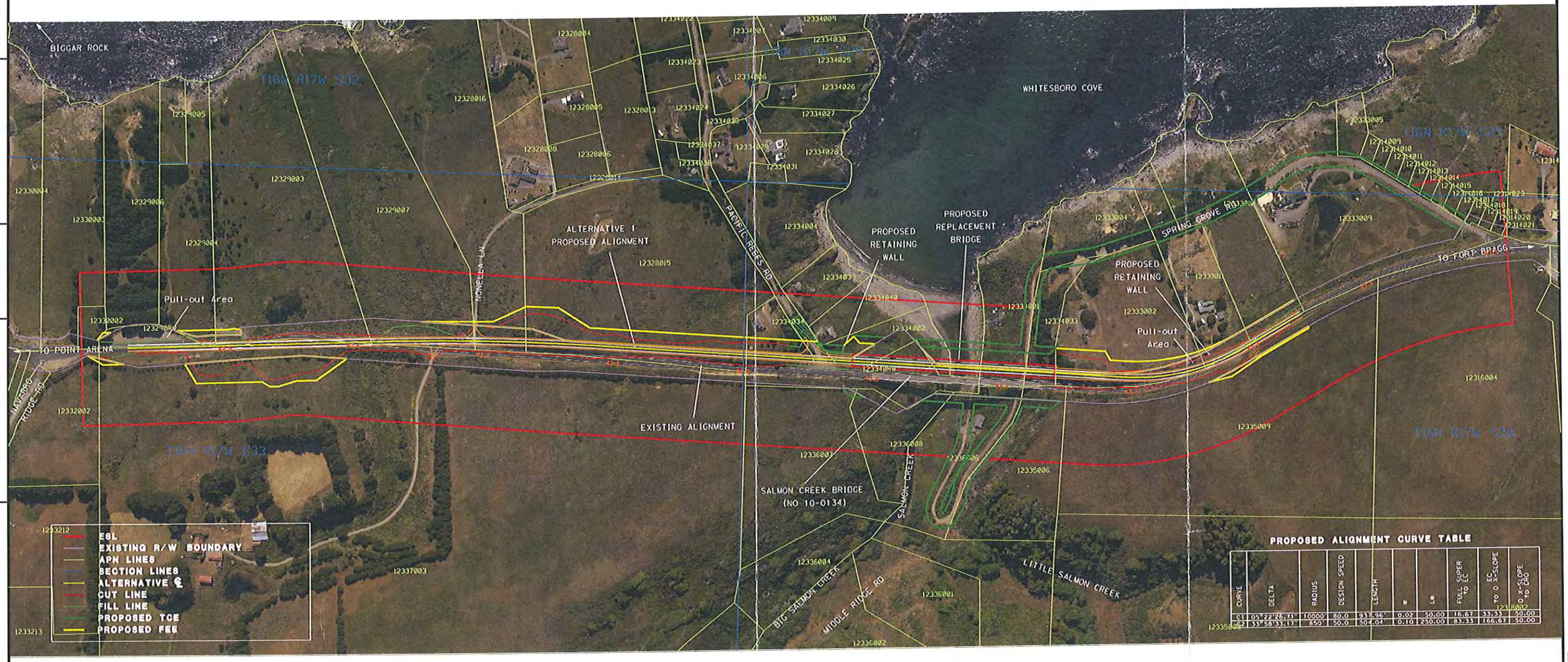

PROPOSED ALIGNMENT CURVE TABLE

CURVE	DELTA	RADIUS	DESIGN SPEED	LENGTH	θ	Le	FULL SUPER TO EC	ES TO 0 X-SLOPE	0 X-SLOPE TO CNO
C1	05°22'26.71"	10000'	80.0	933.96	0.02	50.00	16.67	33.33	50.00
C2	33°58'33.17"	850'	50.0	504.04	0.10	250.00	83.33	166.67	50.00

DESIGN STUDY ONLY

PROJECT LAYOUTS

REVISED BY | DATE REVISED

CALCULATED-DESIGNED BY | CHECKED BY

FUNCTIONAL SUPERVISOR

STATE OF CALIFORNIA - DEPARTMENT OF TRANSPORTATION

Caltrans

LAST REVISION 00-00-00 | DATE PLOTTED => $DATE | TIME PLOTTED => $TIME

RELATIVE BORDER SCALE IS IN INCHES 0 1 2 3

USERNAME => $USER
DGN FILE => $REQUEST

CU 00000 | EA 000000

...\051209_SALT1_RWB.dgn 5/21/2009 3:34:52 PM

ALTERNATIVE 2

01-40140K-MEN-1 PM 42.4/43.3

SALMON CREEK BRIDGE REPLACEMENT

0 100 200 400 600 800

N

Dist	COUNTY	ROUTE	POST MILES TOTAL PROJECT	SHEET No.	TOTAL SHEETS
1	MEN	1	42.4 / 43.3	2	4

REGISTERED CIVIL ENGINEER DATE

PLANS APPROVAL DATE

REGISTERED PROFESSIONAL ENGINEER No. Exp. CIVIL STATE OF CALIFORNIA

THE STATE OF CALIFORNIA OR ITS OFFICERS OR AGENTS SHALL NOT BE RESPONSIBLE FOR THE ACCURACY OR COMPLETENESS OF ELECTRONIC COPIES OF THIS PLAN SHEET.

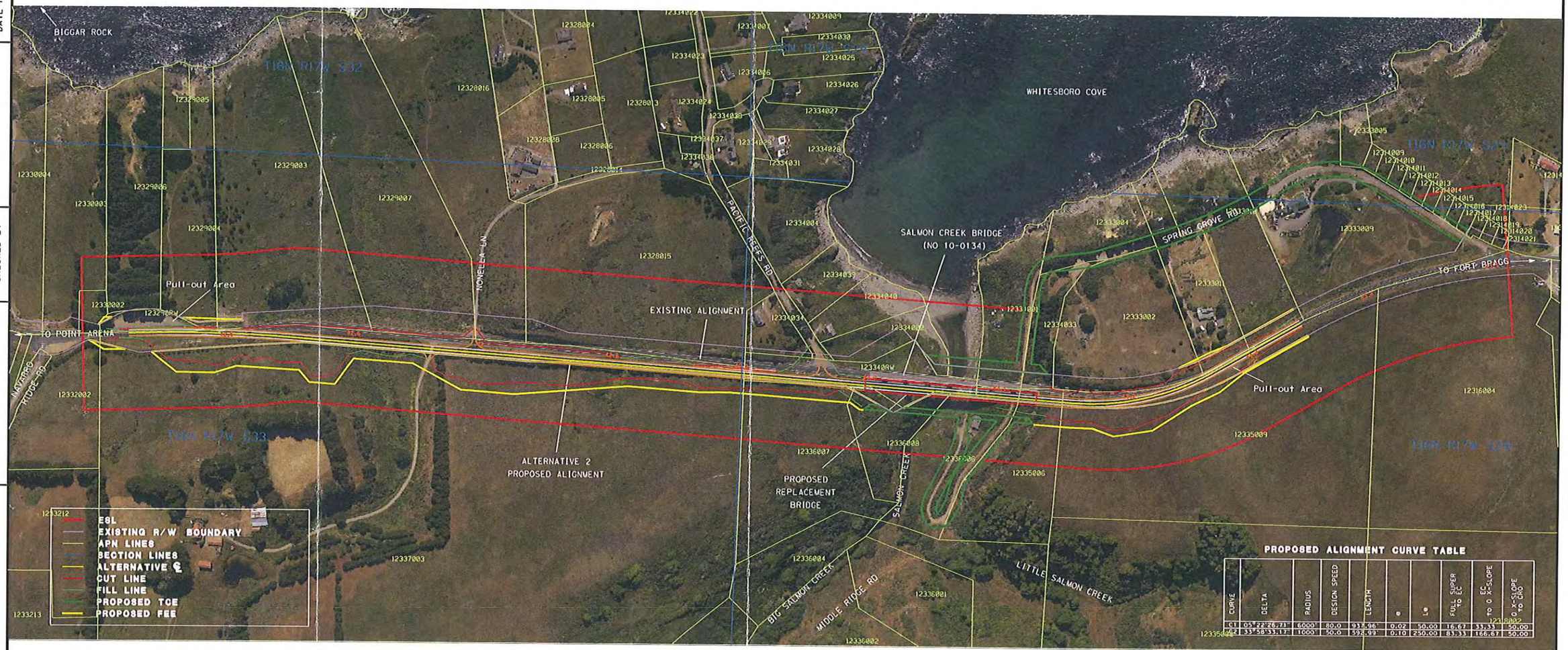

PROPOSED ALIGNMENT CURVE TABLE

CURVE	DELTA	RADIUS	DESIGN SPEED	LENGTH	e	Le	FULL SUPER TO EC	TO 0 X-SLOPE	0 X-SLOPE TO CNO
C1	05°22'26.71"	6000'	80.0	937.96	0.02	50.00	16.67	33.33	50.00
C2	33°58'33.17"	1000'	50.0	592.99	0.10	250.00	83.33	166.67	50.00

DESIGN STUDY ONLY

PROJECT LAYOUTS

REVISED BY | DATE REVISED

CALCULATED-DESIGNED BY | CHECKED BY

FUNCTIONAL SUPERVISOR

STATE OF CALIFORNIA - DEPARTMENT OF TRANSPORTATION

Caltrans

LAST REVISION 00-00-00 | DATE PLOTTED => $DATE | TIME PLOTTED => $TIME

...\051209_SALT2_RWB.dgn 5/21/2009 3:38:48 PM

RELATIVE BORDER SCALE IS IN INCHES 0 1 2 3

USERNAME => $USER
DGN FILE => $REQUEST

CU 00000

EA 000000

Dist	COUNTY	ROUTE	POST MILES TOTAL PROJECT	SHEET No.	TOTAL SHEETS
1	MEN	1	42.4 / 43.3	3	4

REGISTERED CIVIL ENGINEER DATE

PLANS APPROVAL DATE

REGISTERED PROFESSIONAL ENGINEER — No. — Exp. — CIVIL — STATE OF CALIFORNIA

THE STATE OF CALIFORNIA OR ITS OFFICERS OR AGENTS SHALL NOT BE RESPONSIBLE FOR THE ACCURACY OR COMPLETENESS OF ELECTRONIC COPIES OF THIS PLAN SHEET.

ALTERNATIVE 3

01-40140K-MEN-1 PM 42.4/43.3

SALMON CREEK BRIDGE REPLACEMENT

0 100 200 400 600 800

N

PROPOSED ALIGNMENT CURVE TABLE

CURVE	DELTA	RADIUS	DESIGN SPEED	LENGTH	e	Le	FULL SUPER TO EC	EC TO 0 X-SLOPE	0 X-SLOPE TO CRC
C1	5°22'26.71"	10000	80.0	937.96	0.02	50.00	16.67	33.33	50.00
C2	33°58'33.17"	1000	55.0	592.99	0.10	250.00	83.33	166.67	50.00

DESIGN STUDY ONLY

PROJECT LAYOUTS

REVISED BY | DATE REVISED

CALCULATED- DESIGNED BY

CHECKED BY

FUNCTIONAL SUPERVISOR

STATE OF CALIFORNIA - DEPARTMENT OF TRANSPORTATION

Caltrans

LAST REVISION 00-00-00

DATE PLOTTED => $DATE
TIME PLOTTED => $TIME

...\051209_SALT3_RWB.dgn 5/21/2009 4:06:34 PM

RELATIVE BORDER SCALE IS IN INCHES 0 1 2 3

USERNAME => $USER
DGN FILE => $REQUEST

CU 00000

EA 000000

ALTERNATIVE 4

01-40140K-MEN-1 PM 42.4/ 43.3

SALMON CREEK BRIDGE REPLACEMENT

0 100 200 400 600 800

Dist	COUNTY	ROUTE	POST MILES TOTAL PROJECT	SHEET No.	TOTAL SHEETS
1	MEN	1	42.4 / 43.3	4	4

REGISTERED CIVIL ENGINEER DATE

PLANS APPROVAL DATE

REGISTERED PROFESSIONAL ENGINEER No. Exp. CIVIL STATE OF CALIFORNIA

THE STATE OF CALIFORNIA OR ITS OFFICERS OR AGENTS SHALL NOT BE RESPONSIBLE FOR THE ACCURACY OR COMPLETENESS OF ELECTRONIC COPIES OF THIS PLAN SHEET.

PROPOSED ALIGNMENT CURVE TABLE

CURVE	DELTA	RADIUS	DESIGN SPEED	LENGTH	e	Le	FULL SUPER TO EC	EC TO 0 X-SLOPE	0 X-SLOPE TO CRC
C1	5°22'26.11"	10000	80.0	937.96	0.02	50.00	16.67	33.33	50.00
C2	33°58'33.17"	1000	55.0	592.99	0.10	250.00	83.33	166.67	50.00

DESIGN STUDY ONLY

PROJECT LAYOUTS

REVISED BY | DATE REVISED

CALCULATED-DESIGNED BY | CHECKED BY

FUNCTIONAL SUPERVISOR

STATE OF CALIFORNIA - DEPARTMENT OF TRANSPORTATION

Caltrans

LAST REVISION 00-00-00 | DATE PLOTTED => $DATE | TIME PLOTTED => $TIME

...\051209_SALT4_RWB.dgn 5/21/2009 4:09:47 PM

RELATIVE BORDER SCALE IS IN INCHES 0 1 2 3

USERNAME => $USER
DGN FILE => $REQUEST

CU 00000

EA 000000

ATTACHMENT D

ADVANCE PLANNING STUDY (APS)

State of California
DEPARTMENT OF TRANSPORTATION

Business, Transportation and Housing Agency

Memorandum

Flex your power!
Be energy efficient!

To: ILENE POINDEXTER
ADVANCE PLANNING
DISTRICT 1

Date: May 18, 2009

File: 01-MEN-1- PM 42.5/43.3
EA:01-40140K
Salmon Creek Bridge (Replace)
Br. No. 10-0134

From: DAVID SOON
Bridge Design Branch 7
Office of Bridge Design North
Structure Design
Division of Engineering Services MS 9-4/8/I

Subject: Advance Planning Study Transmittal

Attached is the Advance Planning Study for the above referenced project as submitted to the Division of Engineering Services by your initial request memo dated September 30, 2008 for alignment alternative 1 and 2, and February 11, 2009 for alignment alternative 3 and 4.

The estimated construction cost, including 10% time-related overhead, 10% mobilization and 25% contingencies, is as follows:

Bridge Alternative	Estimated Cost	Estimated Working Days
1A	$25,298,000	240
1B	$30,482,000	280
1C	$28,647,000	240
1D	$25,460,000	220
2A	$19,253,000	240
2B	$26,984,000	280
2C	$27,075,000	240
2D	$22,895,000	220
3A	$24,284,000	450
3B	$29,639,000	450
4A	$24,284,000	450
4B	$29,639,000	450

The first symbol (number) in the Bridge Alternative indicates the alignment.
The second symbol (letter) in the Bridge Alternative indicates bridge type.

Bridge Alignment description:
1. West of existing without stage construction
2. East of existing without stage construction
3. West of existing with stage construction
4. East of existing with stage construction

Bridge Types:
A. Haunch CIP/PS Box Girder with vertical support
B. CIP/PS Box Girder spans with arched and vertical support
C. CIP/PS Box Girder spans with arched and vertical support. Vertical support are located away from arch
D. CIP/RS Slab spans with arched and spandrel columns

The following table summarizes the projected total structure cost based on a 5.5% escalation rate:

Bridge Alternative	Escalated Cost				
	2010	2011	2012	2013	2014
1A	$26,689,000	$28,157,000	$29,706,000	$31,340,000	$33,064,000
1B	$32,159,000	$33,928,000	$35,794,000	$37,763,000	$39,840,000
1C	$30,223,000	$31,885,000	$33,639,000	$35,489,000	$37,441,000
1D	$26,860,000	$28,337,000	$29,896,000	$31,540,000	$33,275,000
2A	$20,312,000	$21,429,000	$22,608,000	$23,851,000	$25,163,000
2B	$28,464,000	$30,034,000	$31,686,000	$33,429,000	$35,268,000
2C	$28,564,000	$30,135,000	$31,792,000	$33,541,000	$35,386,000
2D	$24,154,000	$25,482,000	$26,884,000	$28,363,000	$29,923,000
3A	$25,620,000	$27,029,000	$28,516,000	$30,084,000	$31,739,000
3B	$31,269,000	$32,989,000	$34,803,000	$36,717,000	$38,736,000
4A	$25,620,000	$27,029,000	$28,516,000	$30,084,000	$31,739,000
4B	$31,269,000	$32,989,000	$34,803,000	$36,717,000	$38,736,000

The escalated structure cost is provided for informational purposes only and does not replace annual cost updates as required by Department policy.

This Advance Planning Study and associated cost estimate is based on the following assumptions:

1. Hydraulic information was based on "Preliminary Hydraulic Report (PHR) for Salmon Creek" memo dated Nov. 24, 2008
   - High Tide elevation is assumed to be 9'-0 based of the 1949 bridge As-Builts.
   - Q50 and Q100 water surface elevations (WSE) are 8.4' and 9.2', respectively. The WSEs were based on provided contour & not measured channel cross-section. Q50 and Q100 WSEs calculated from measured channel cross-section will be required for the final design of the replacement bridge.

2. Foundation Information was based on the " Structure Preliminary Geotechnical Report" memo dated Dec. 11, 2008.
   - Assumed foundation types: Abutments - driven steel "H" piles. Piers - 8' to 10' diameter CIDH shafts founded in bedrock.
   - A settlement period may be required for new approach embankments.
   - Arches are founded on mined inclined shafts

3. Deck drainage discharge shall be at least 20'-0 from the limits of the creek at high tide.

4. The listed assumed environmental restrictions were taken from the (nearby) Noyo River Bridge (replacement) project (EA 01-378004).

5. Limit of removal:
   - Abutments remove existing structure to 3 feet below finish grade.
   - Piers remove to bottom of footing. All piles to stay in place.

6. Cast-in-place construction supported on falsework. Maximum falsework heigh will be approximately 130 feet at Salmon Creek. A wooden trestle will be build accross Salmon Creek to support falsework.

7. The cost and working days estimates for Alt. 4A and Alt. 4B are assumed to the same as estimates from Alt. 3A and Alt. 3B, respectively.

* Specific assumptions for each alternative is listed on plans

If you have any questions or if you need additional information regarding this study, please contact Wendy Hou at (916) 227-8295 or David Soon at (916) 227-8709.

Attachments

c: Eskinder Taddese, Project Coordinating Engineer MS 9-5/12F
Kelly Holden, Bridge Design Office Chief MS 9-4/11G
Steve Wiman, Technical Liaison Engineer MS 9-1/5C
H. Javier Chavez, Structure Aesthetics Branch Chief MS 9-3/1H
Pete Whitfield, Structure Maintenance & Investigations MS 9-1/9I
Kathy Wall, HA21 Program Coordinator MS 9-1/9I
John Babcock, Structure Construction Assistant Deputy Division Chief MS 9-2/11H
Roy Bibbens, Geotechnical Services MS 5
Steve NG, Structure Hydraulics & Hydrology MS 9-1/2I

STATE OF CALIFORNIA - DEPARTMENT OF TRANSPORTATION - DIVISION OF STRUCTURES

DIST.	COUNTY	ROUTE	POST MILE
01	Men	1	

To get to the Caltrans web site, go to: http://www.dot.ca.gov

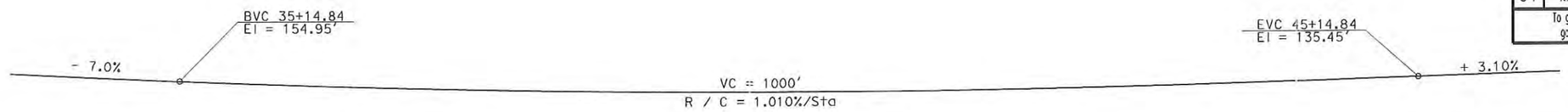

PROFILE GRADE

NO SCALE

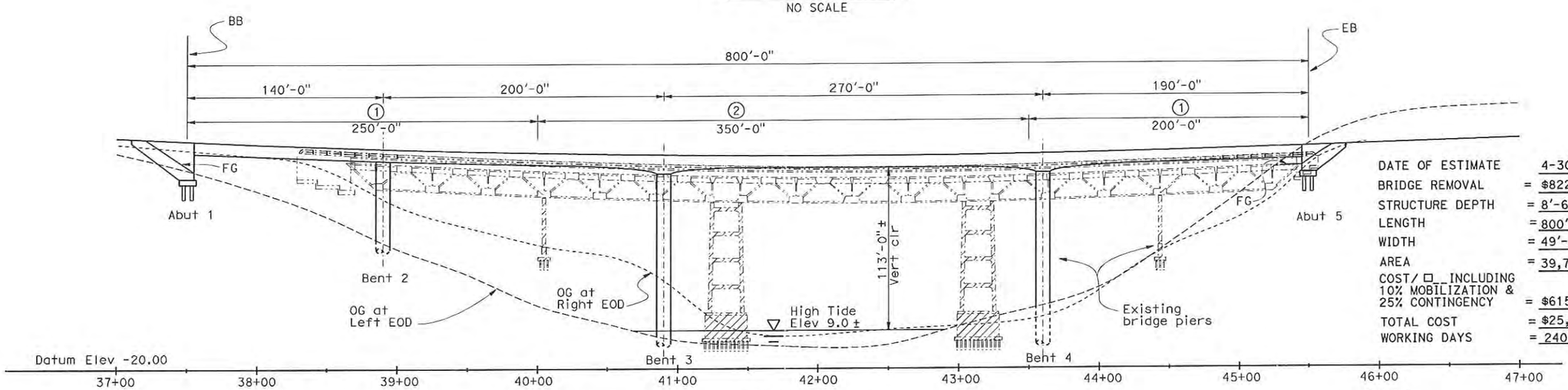

ELEVATION

1" = 80'

DATE OF ESTIMATE	4-30-2009
BRIDGE REMOVAL	= $822,000
STRUCTURE DEPTH	= 8'-6" to 13'-6"
LENGTH	= 800'-0"
WIDTH	= 49'-8"
AREA	= 39,736 SQFT
COST/ □_ INCLUDING 10% MOBILIZATION & 25% CONTINGENCY	= $615.95
TOTAL COST	= $25,298,000
WORKING DAYS	= 240

Notes:

1. Limits of scuppers in barriers.
2. Limits of Deck Drain Type D-3. Drain pipe to discharge at bottom of Bent 4.
3. Structure Approach Type N (30S)
4. MBGR, see Road Plans
5. Crash Cushion, see Road Plans.

—··— Indicates existing

▨ Indicates limits of removal

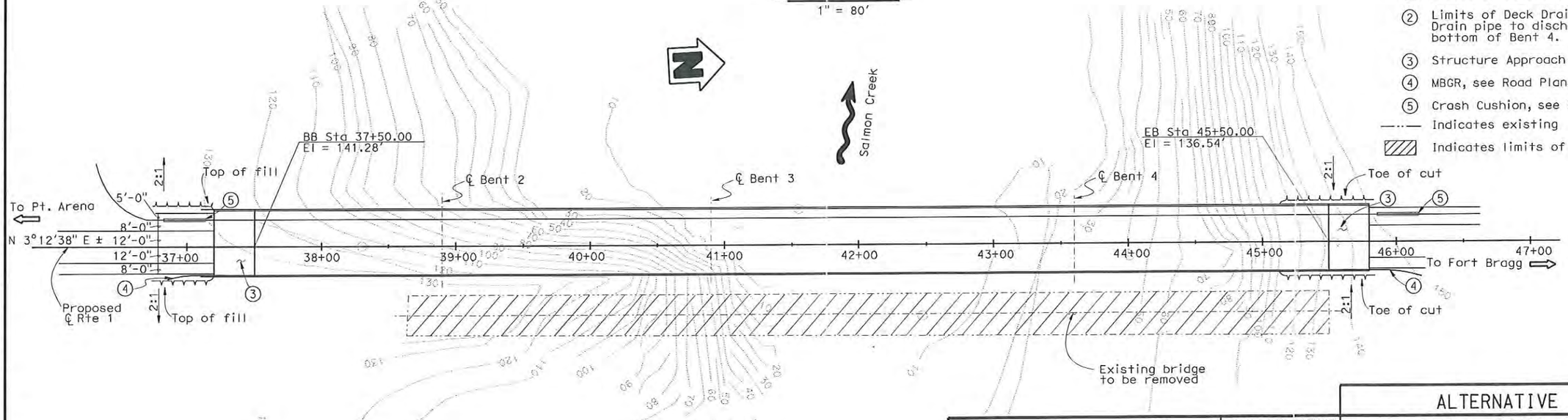

PLAN

1" = 80'

DESIGNED BY David Soon	DATE 01-15-09	STRUCTURE DESIGN BRANCH 7	ALTERNATIVE 1A
DRAWN BY Y. Feng/G. Dickerson	DATE 03-26-09		PLANNING STUDY 1 OF 2
CHECKED BY X	DATE X		SALMON CREEK BRIDGE (REPLACE)
APPROVED David Soon	DATE 05-18-09		BRIDGE NO. 10-0134 / CU 01
			SCALE: As noted / EA 40140K

USERNAME => s136697 DATE PLOTTED => 19-MAY-2009 TIME PLOTTED => 09:11

STRUCTURES DESIGN ADVANCE PLANNING STUDY SHEET (ENGLISH) (REV. 10/25/05)

FILE => 01-40140k_1a_gp1.dgn

STATE OF CALIFORNIA - DEPARTMENT OF TRANSPORTATION - DIVISION OF STRUCTURES

DIST.	COUNTY	ROUTE	POST MILE
01	Men	1	

To get to the Caltrans web site, go to: http://www.dot.ca.gov

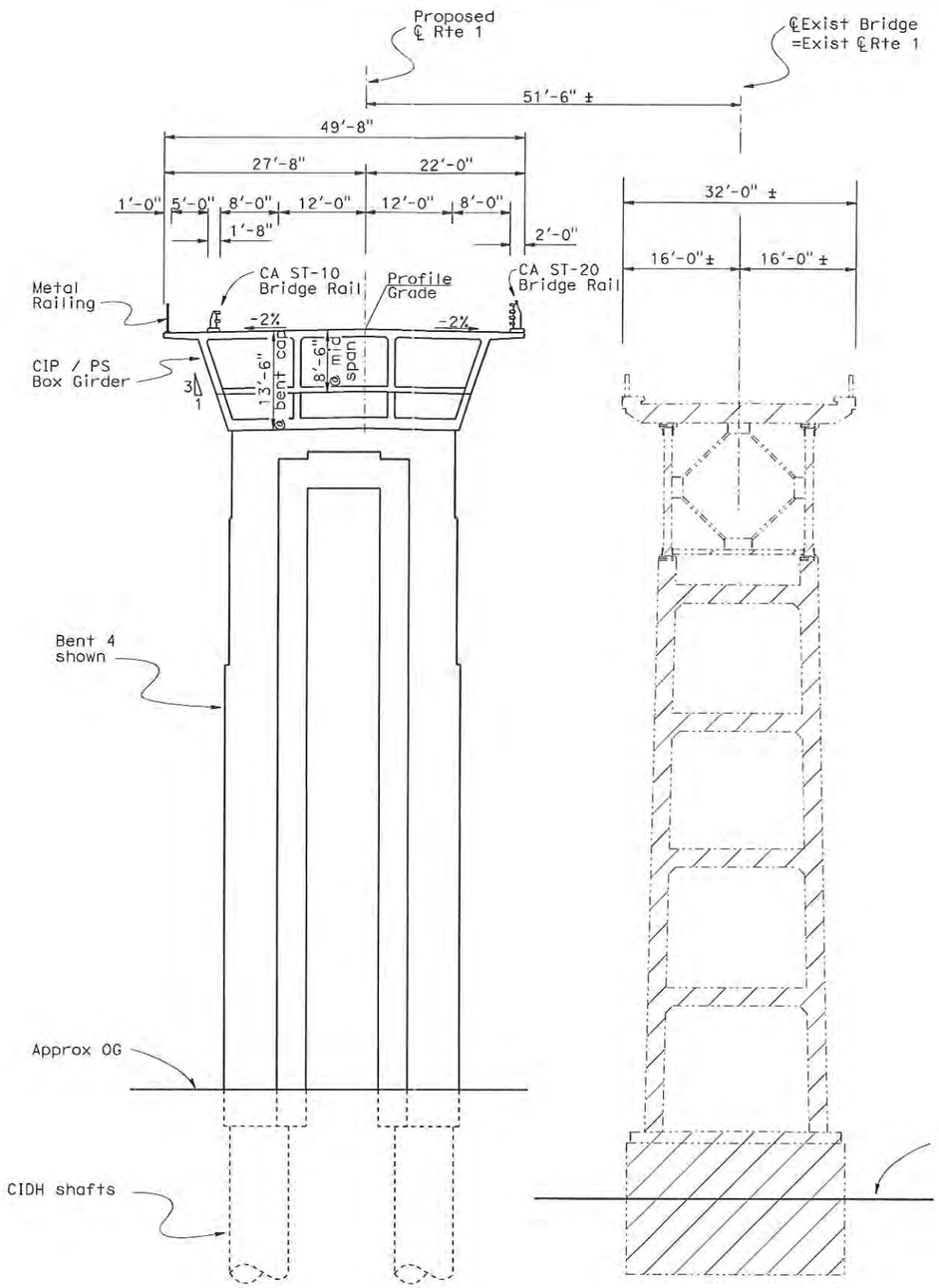

TYPICAL SECTION

1" = 20'

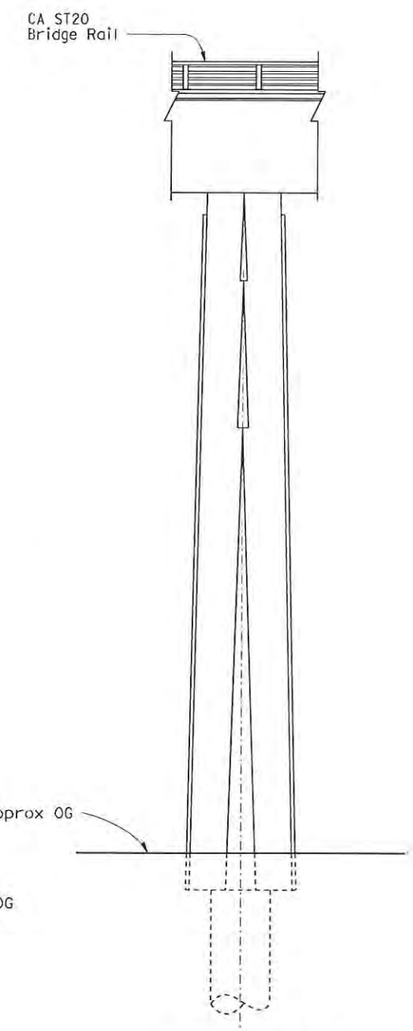

ELEVATION

1" = 20'

Design Assumptions:

1. Hydraulic information was based on "Preliminary Hydraulic Report (PHR) for Salmon Creek (Br. No. 10-0134)" memo dated Nov. 24, 2008.
   - High Tide elevation is assumed to be 9.0' based of the 1949 bridge As-Builts.
   - Q50 and Q100 water surface elevations (WSE) are 8.4' and 9.2', respectively. The WSEs were based on provided contour & not measured channel cross-section. Q50 and Q100 WSEs calculated from measured channel cross-section will be required for the final design of the replacement bridge.
2. Foundation Information was based on the " Structure Preliminary Geotechnical Report" memo dated Dec. 11, 2008.
   - Assumed foundation types: Abutments - driven steel "H" piles. Piers - 8' to 10' diameter CIDH shafts founded in bedrock.
   - A settlement period may be required for new approach embankments.
3. Deck drainage discharge shall be at least 20' from the limits of the creek at high tide.
4. The listed assumed environmental restrictions were taken from the (nearby) Noyo River Bridge (replacement) project (EA 01-378004).
   - Work in Salmon Creek from June 1st to October 15th only due to fish spawning.
5. Limits of removal:
   - Abutment 1 and Autment 6 remove existing structure to 3 feet below finish grade.
   - Piers 2, 3, 4, and 5 remove to bottom of footing. All piles to stay in place.
6. Cast-in-place construction supported on falsework. Maximum falsework heigh will be approximately 130 feet at Salmon Creek. A wooden trestle will be build accross Salmon Creek to support falsework.

Notes:

—··— Indicates existing

▨ Indicates limits of removal

DESIGNED BY David Soon	DATE 03-11-09	STRUCTURE DESIGN BRANCH 7	ALTERNATIVE 1A
DRAWN BY Y. Feng/G. Dickerson	DATE 03-11-09		PLANNING STUDY 2 OF 2
CHECKED BY X	DATE X		SALMON CREEK BRIDGE (REPLACE)
APPROVED David Soon	DATE 05-18-09		BRIDGE NO. 10-0134 / CU 01
			SCALE: As noted / EA 40140K

USERNAME => s136697 DATE PLOTTED => 19-MAY-2009 TIME PLOTTED => 09:11

STRUCTURES DESIGN ADVANCE PLANNING STUDY SHEET (ENGLISH) (REV. 10/25/05)

FILE => 01-40140K_1a_gp2.dgn

STATE OF CALIFORNIA - DEPARTMENT OF TRANSPORTATION - DIVISION OF STRUCTURES

DIST.	COUNTY	ROUTE	POST MILE
01	Men	1	

To get to the Caltrans web site, go to: http://www.dot.ca.gov

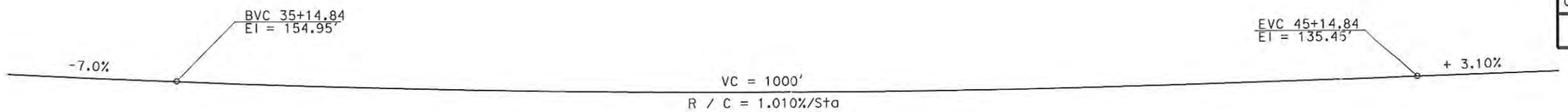

PROFILE GRADE

NO SCALE

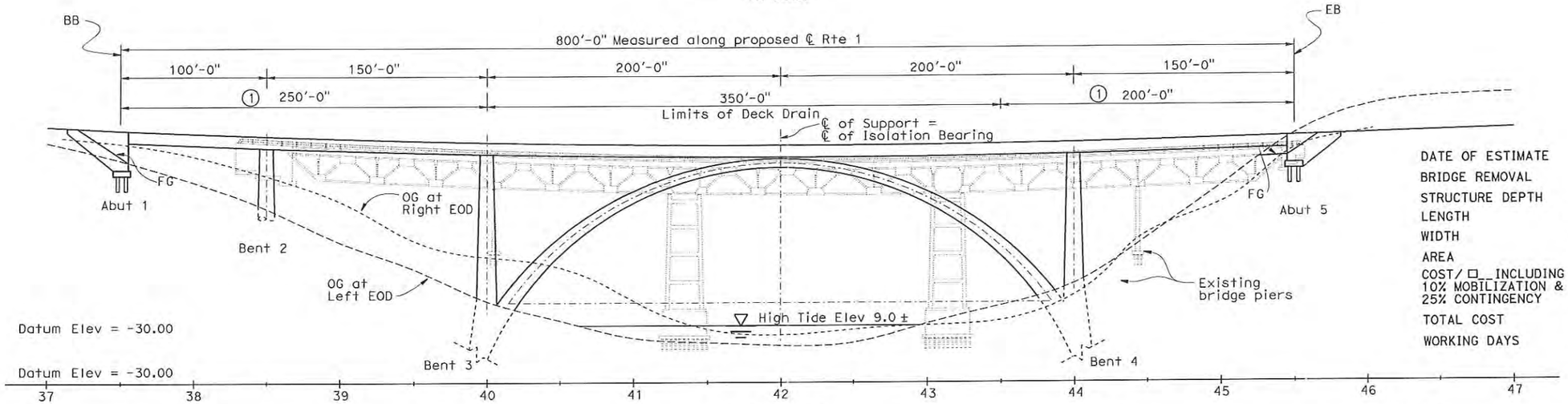

ELEVATION

1" = 80'

DATE OF ESTIMATE	5-12-2009
BRIDGE REMOVAL	= $822,000
STRUCTURE DEPTH	= 8'-0"
LENGTH	= 800'-0"
WIDTH	= 49.67'
AREA	= 39,736 SQFT
COST/ □ INCLUDING 10% MOBILIZATION & 25% CONTINGENCY	= $746.42
TOTAL COST	= $30,482,000
WORKING DAYS	= 280

Notes :

① Limits pf Scuppers in barriers.

② Structure Approach Type N (30s)

③ MBGR, see Road Plans

④ Crash Cushion, see Road Plans.

Indicates bridge removal

□ Indicates Deck Drain Type D-3

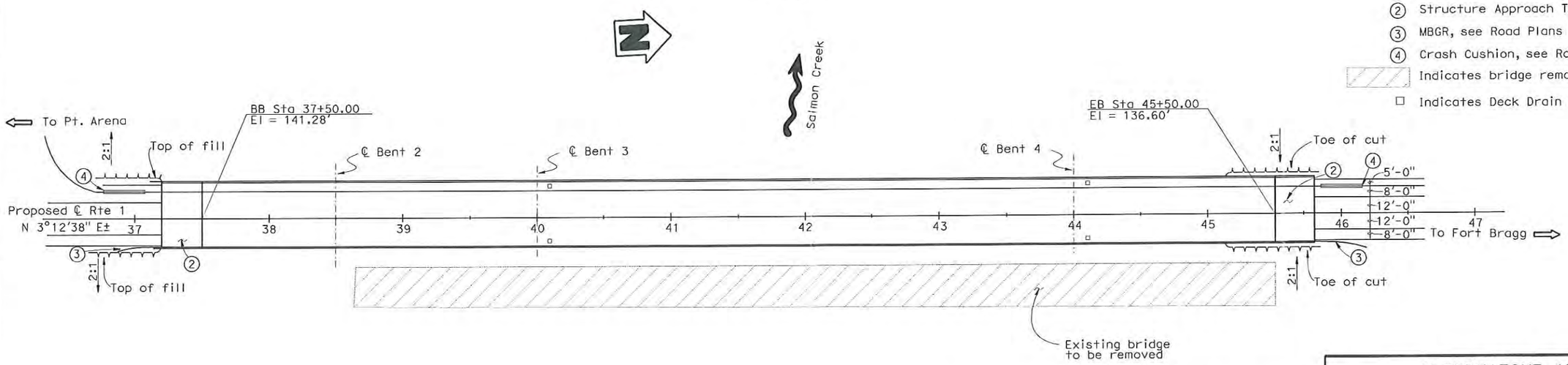

PLAN

1" = 80'

DESIGNED BY Wendy Hou	DATE 01-26-09	STRUCTURE DESIGN BRANCH 7	ALTERNATIVE 1B
DRAWN BY Gerald Dickerson	DATE 05-14-09		PLANNING STUDY 1 OF 2
CHECKED BY X	DATE X		SALMON CREEK BRIDGE (REPLACE)
APPROVED David Soon	DATE 05-18-09		BRIDGE NO. 10-0134 / CU 01 / SCALE: As noted / EA 40140k

FILE => 01-40140k_1b_gp1.dgn

STRUCTURES DESIGN ADVANCE PLANNING STUDY SHEET (ENGLISH) (REV. 10/25/05)

USERNAME => s136697 DATE PLOTTED => 19-MAY-2009 TIME PLOTTED => 09:11

STATE OF CALIFORNIA - DEPARTMENT OF TRANSPORTATION - DIVISION OF STRUCTURES

DIST.	COUNTY	ROUTE	POST MILE
01	Men	1	

To get to the Caltrans web site, go to: http://www.dot.ca.gov

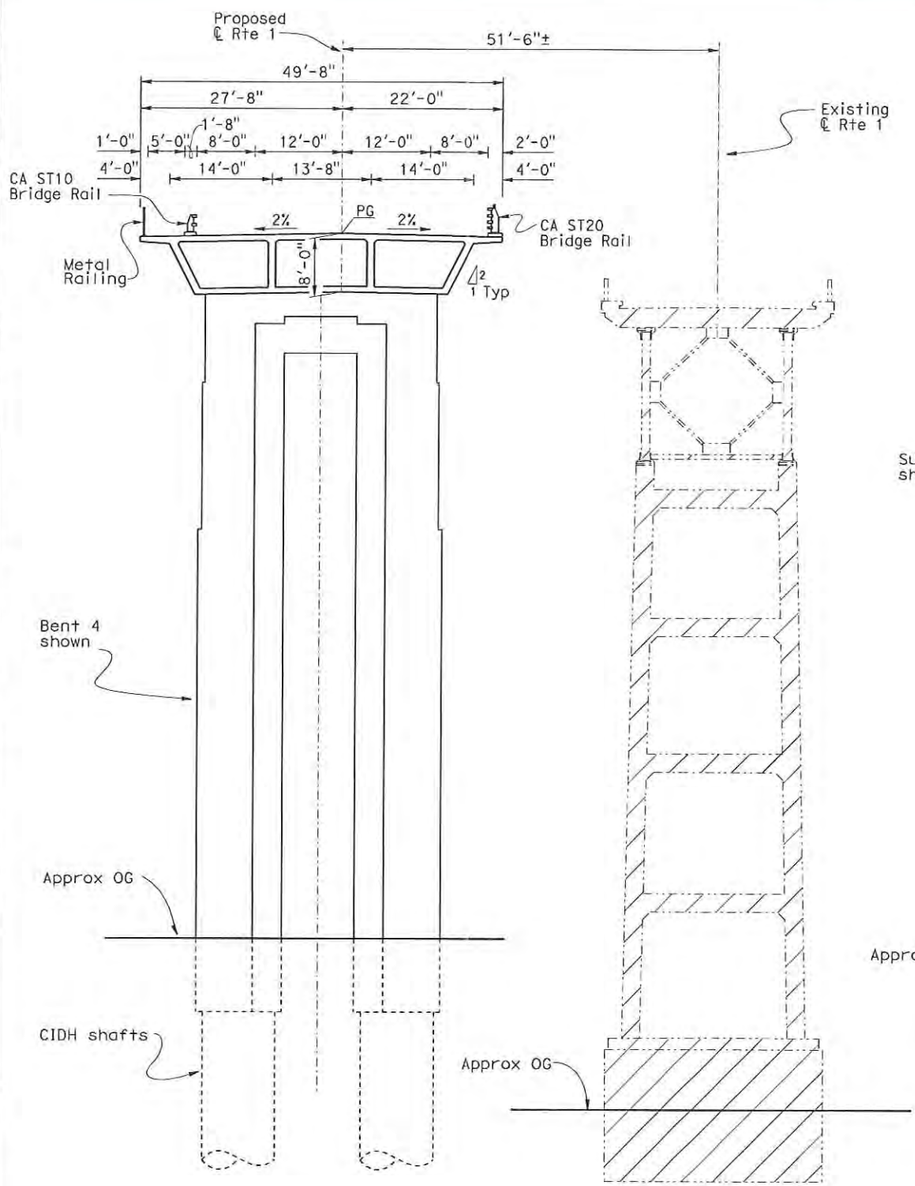

TYPICAL SECTION A

1" = 20'

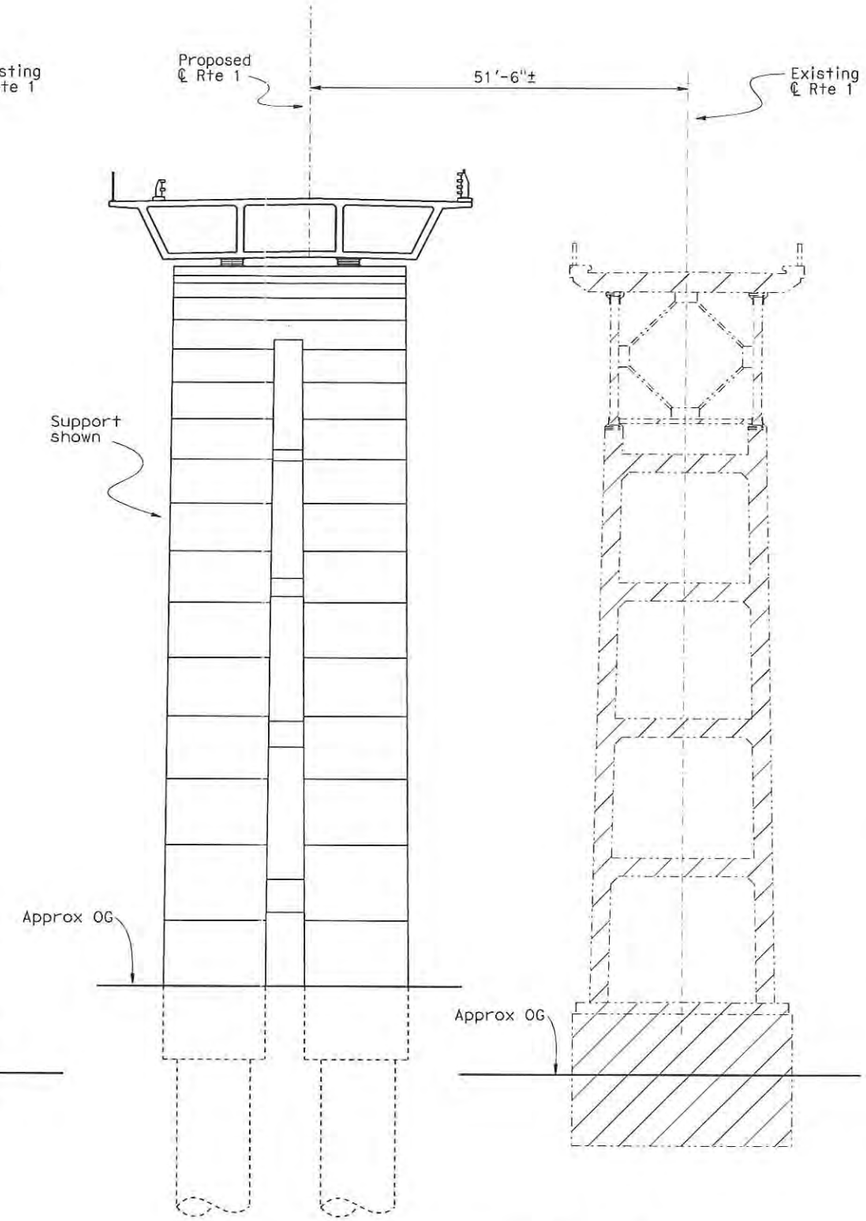

TYPICAL SECTION B

1" = 20'

Design Assumptions:

1. Hydraulic information was based on "Preliminary Hydraulic Report (PHR) for Salmon Creek (Br. No. 10-0134)" memo dated Nov. 24, 2008.
   - High Tide elevation is assumed to be 9.0' based of the 1949 bridge As-Builts.
   - Q50 and Q100 water surface elevations (WSE) are 8.4' and 9.2', respectively. The WSEs were based on provided contour & not measured channel cross-section. Q50 and Q100 WSEs calculated from measured channel cross-section will be required for the final design of the replacement bridge.
2. Foundation Information was based on the " Structure Preliminary Geotechnical Report" memo dated Dec. 11, 2008.
   - Assumed foundation types: Abutments - driven steel "H" piles. Piers - 8' to 10' diameter CIDH shafts founded in bedrock.
   - A settlement period may be required for new approach embankments.
3. Deck drainage discharge shall be at least 20' from the limits of the creek at high tide.
4. The listed assumed environmental restrictions were taken from the (nearby) Noyo River Bridge (replacement) project (EA 01-378004).
   - Work in Salmon Creek from June 1st to October 15th only, due to fish spawning.
5. Limits of removal:
   - Abutment 1 and Autment 6 remove existing structure to 3 feet below finish grade.
   - Pier 2,3,4, and 5 remove to bottom of footing. All piles to stay in place.
6. Cast-in-place construction supported on falsework. Maximum falsework heigh will be approximately 130 feet at Salmon Creek. A wooden trestle will be build accross Salmon Creek to support falsework.

Notes:

—··— Indicates existing

▨ Indicates limits of removal

DESIGNED BY Wendy Hou	DATE 01-27-09	STRUCTURE DESIGN BRANCH 7	ALTERNATIVE 1B
DRAWN BY Yingjue Feng	DATE 01-27-09		PLANNING STUDY 2 OF 2
CHECKED BY X	DATE X		SALMON CREEK BRIDGE (REPLACE)
APPROVED David Soon	DATE 05-18-09		BRIDGE NO. 10-0134 / CU 01
			SCALE: As noted / EA 40140K

STRUCTURES DESIGN ADVANCE PLANNING STUDY SHEET (ENGLISH) (REV. 10/25/05)

FILE => 01-40140K_1b_gp2.dgn

USERNAME => s13669? DATE PLOTTED => 19-MAY-2009 TIME PLOTTED => 09:11

STATE OF CALIFORNIA - DEPARTMENT OF TRANSPORTATION - DIVISION OF STRUCTURES

DIST.	COUNTY	ROUTE	POST MILE
01	Men	1	

To get to the Caltrans web site, go to: http://www.dot.ca.gov

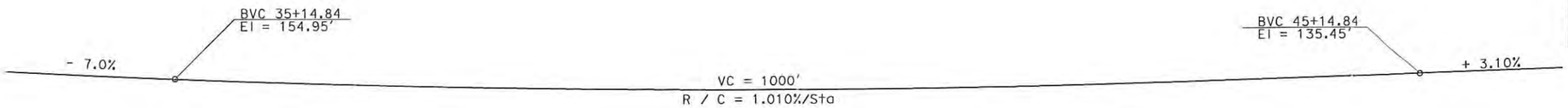

PROFILE GRADE

NO SCALE

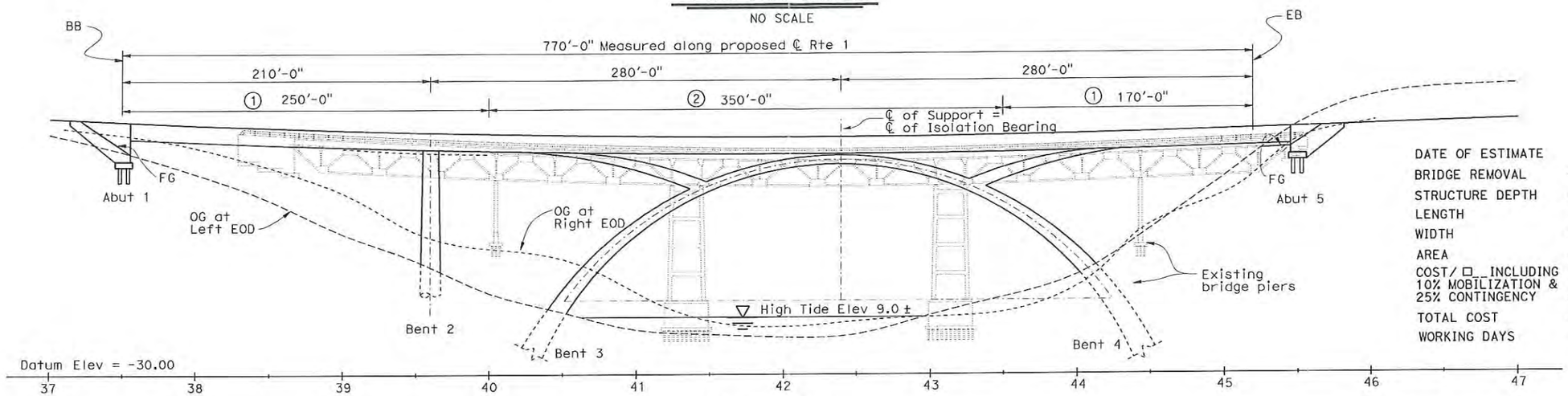

ELEVATION

1" = 80'

DATE OF ESTIMATE	5-12-2009
BRIDGE REMOVAL	= $822,000
STRUCTURE DEPTH	= 12'-0"
LENGTH	= 770'-0"
WIDTH	= 49.67'
AREA	= 38,246 SQFT
COST/ □_ INCLUDING 10% MOBILIZATION & 25% CONTINGENCY	= $727.53
TOTAL COST	= $28,647,000
WORKING DAYS	= 240

Notes :

① Limits of scuppers in barriers.

② Limits of Deck Drain Type D-3. Drain pipe to discharge at bottom of Bent 4.

③ Structure Approach Type N (30S)

④ MBGR, see Road Plans

⑤ Crash Cushion, see Road Plans.

Indicates limits of removal

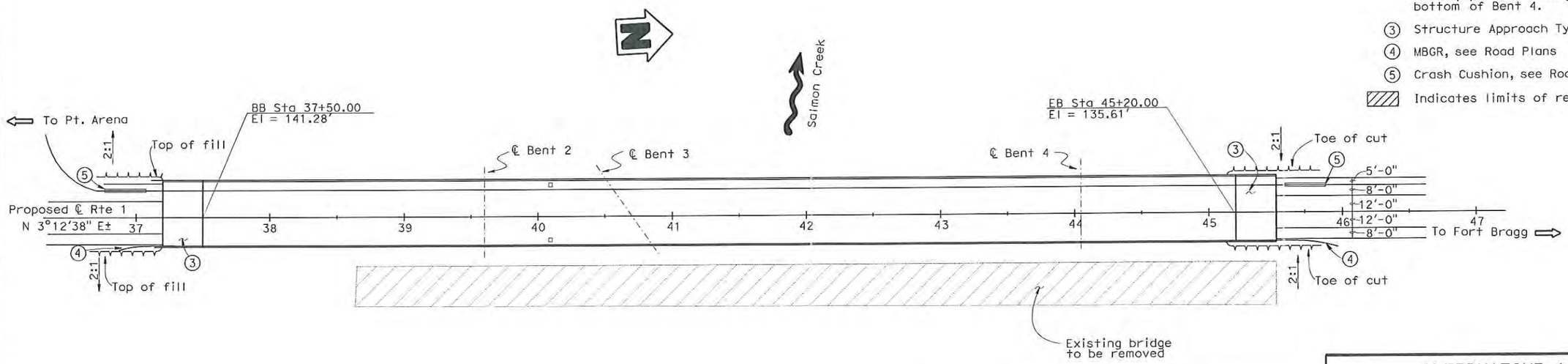

PLAN

1" = 80'

DESIGNED BY Wendy Hou	DATE 01-28-09	STRUCTURE DESIGN BRANCH 7	ALTERNATIVE 1C
DRAWN BY Y Feng/G Dickerson	DATE 05-14-09		PLANNING STUDY 1 OF 2
CHECKED BY X	DATE X		SALMON CREEK BRIDGE (REPLACE)
APPROVED David Soon	DATE 05-18-09		BRIDGE NO. 10-0134 / CU 01
			SCALE: As noted / EA 40140K

FILE => 01-40140k_1c_gp1.dgn

STRUCTURES DESIGN ADVANCE PLANNING STUDY SHEET (ENGLISH) (REV. 10/25/05)

USERNAME => s136697 DATE PLOTTED => 19-MAY-2009 TIME PLOTTED => 09:11

STATE OF CALIFORNIA - DEPARTMENT OF TRANSPORTATION - DIVISION OF STRUCTURES

DIST	COUNTY	ROUTE	POST MILE
01	Men	1	

To get to the Caltrans web site, go to: http://www.dot.ca.gov

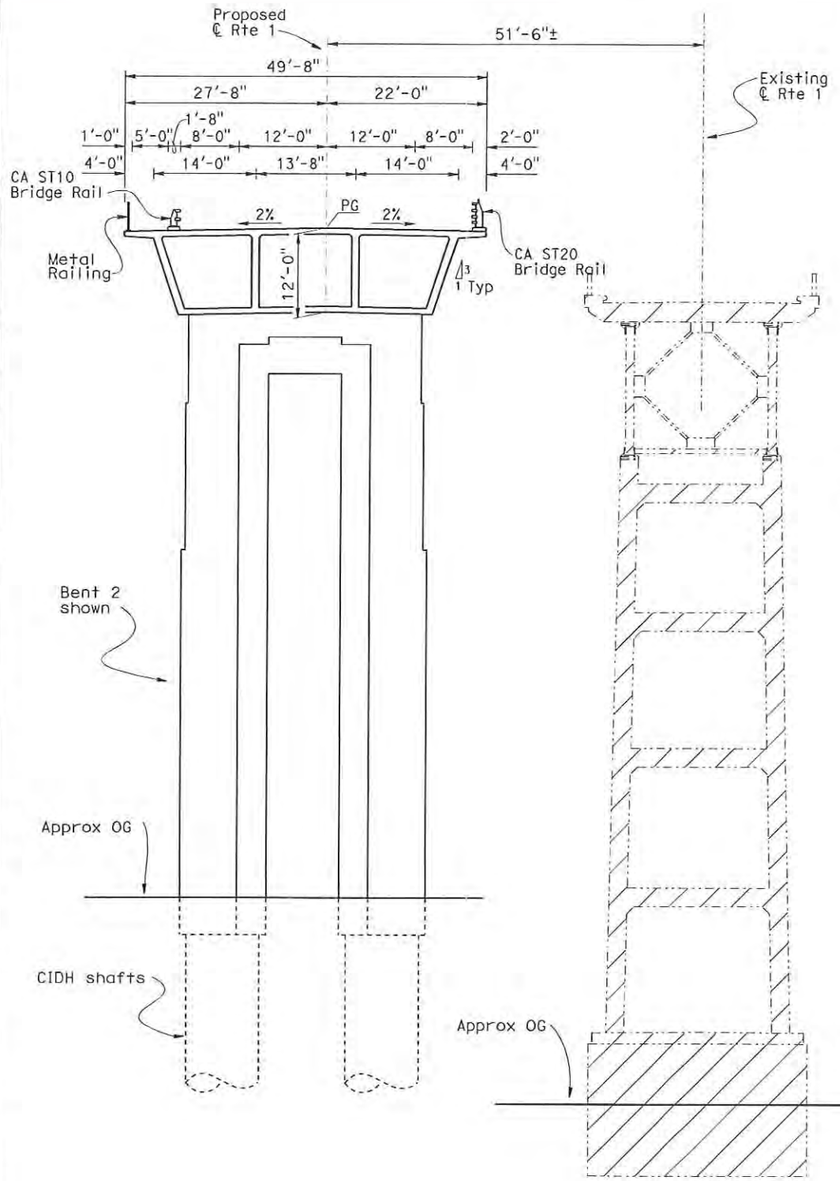

TYPICAL SECTION A

1" = 20'

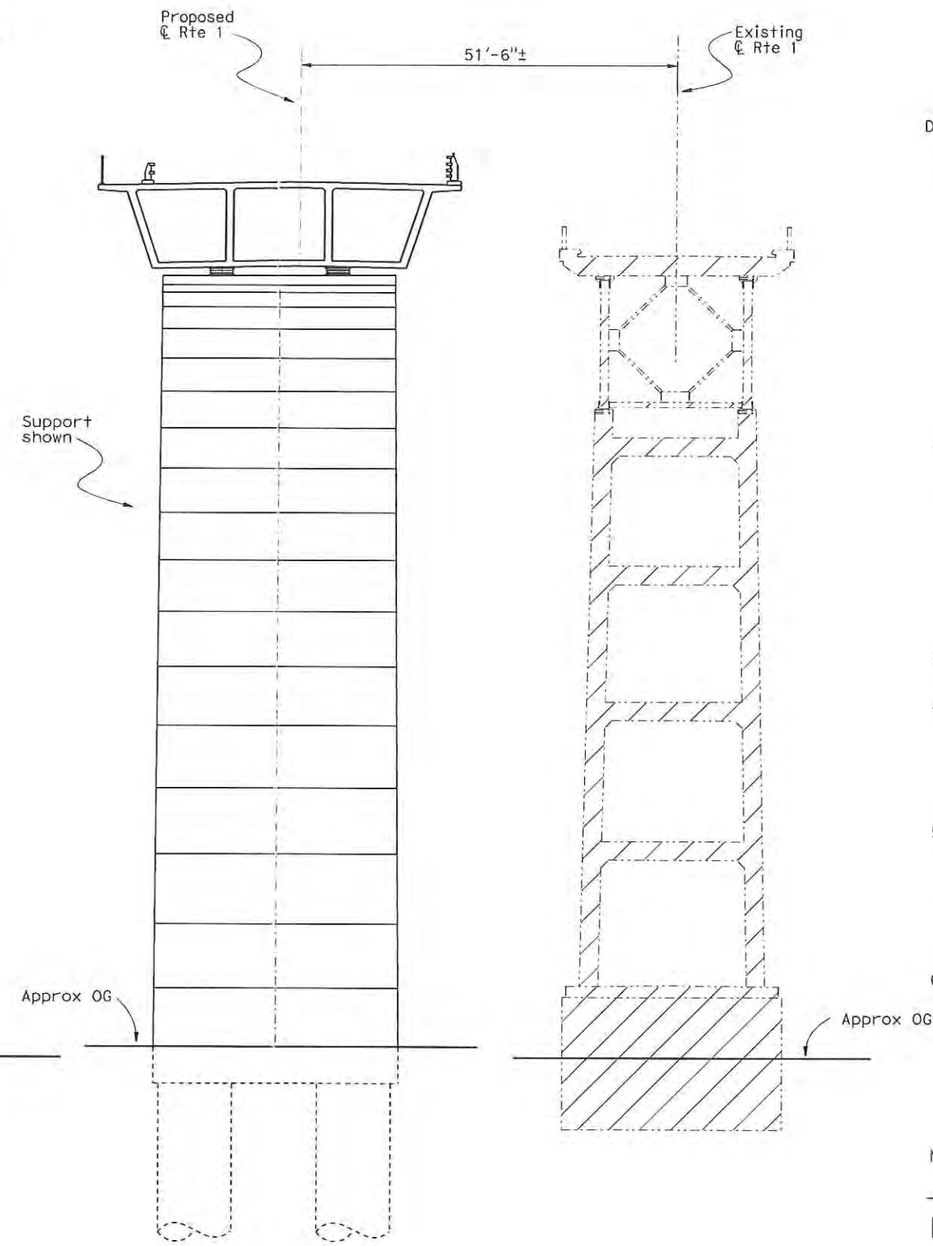

TYPICAL SECTION B

1" = 20'

Design Assumptions:

1. Hydraulic information was based on "Preliminary Hydraulic Report (PHR) for Salmon Creek (Br. No. 10-0134)" memo dated Nov. 24, 2008.
   - High Tide elevation is assumed to be 9.0' based of the 1949 bridge As-Builts.
   - Q50 and Q100 water surface elevations (WSE) are 8.4' and 9.2', respectively. The WSEs were based on provided contour & not measured channel cross-section. Q50 and Q100 WSEs calculated from measured channel cross-section will be required for the final design of the replacement bridge.
2. Foundation Information was based on the " Structure Preliminary Geotechnical Report" memo dated Dec. 11, 2008.
   - Assumed foundation types: Abutments - driven steel "H" piles. Piers - 8' to 10' diameter CIDH shafts founded in bedrock.
   - A settlement period may be required for new approach embankments.
3. Deck drainage discharge shall be at least 20' from the limits of the creek at high tide.
4. The listed assumed environmental restrictions were taken from the (nearby) Noyo River Bridge (replacement) project (EA 01-378004).
   - Work in Salmon Creek from June 1st to October 15th only, due to fish spawning.
5. Limits of removal:
   - Abutment 1 and Autment 6 remove existing structure to 3 feet below finish grade.
   - Pier 2,3,4, and 5 remove to bottom of footing. All piles to stay in place.
6. Cast-in-place construction supported on falsework. Maximum falsework heigh will be approximately 130 feet at Salmon Creek. A wooden trestle will be build accross Salmon Creek to support falsework.

Notes:

—·—· Indicates existing

▨ Indicates limits of removal

DESIGNED BY Wendy Hou	DATE 01-29-09	STRUCTURE DESIGN BRANCH 7	ALTERNATIVE 1C
DRAWN BY Yingjue Feng	DATE 01-29-09		PLANNING STUDY 2 OF 2
CHECKED BY X	DATE X		SALMON CREEK BRIDGE (REPLACE)
APPROVED David Soon	DATE 05-18-09		BRIDGE NO. 10-0134 / CU 01
			SCALE: As noted / EA 40140k

STRUCTURES DESIGN ADVANCE PLANNING STUDY SHEET (ENGLISH) (REV. 10/25/05)

FILE => 01-40140k_1c_gp2.dgn

USERNAME => s136697 DATE PLOTTED => 19-MAY-2009 TIME PLOTTED => 09:12

STATE OF CALIFORNIA - DEPARTMENT OF TRANSPORTATION - DIVISION OF STRUCTURES

DIST.	COUNTY	ROUTE	POST MILE
01	Men	1	

To get to the Caltrans web site, go to: http://www.dot.ca.gov

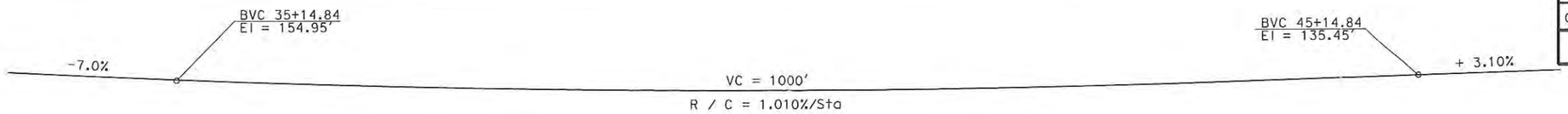

PROFILE GRADE

NO SCALE

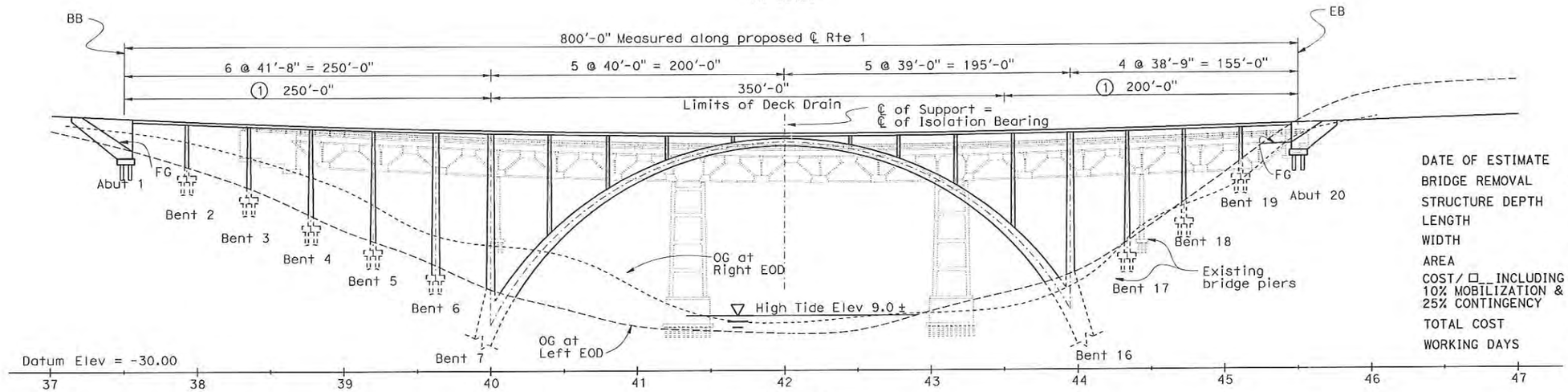

ELEVATION

1" =80'

DATE OF ESTIMATE	5-12-2009
BRIDGE REMOVAL	= $822,000
STRUCTURE DEPTH	= 2'-0"
LENGTH	= 800'-0"
WIDTH	= 49.67'
AREA	= 39,736 SQFT
COST/ ☐ INCLUDING 10% MOBILIZATION & 25% CONTINGENCY	= $620.03
TOTAL COST	= $28,647,000
WORKING DAYS	= 220

Notes :

① Limits of scuppers in barriers.

② Structure Approach Type N (30S)

③ MBGR, see Road Plans

④ Crash Cushion, see Road Plans.

Indicates bridge removal

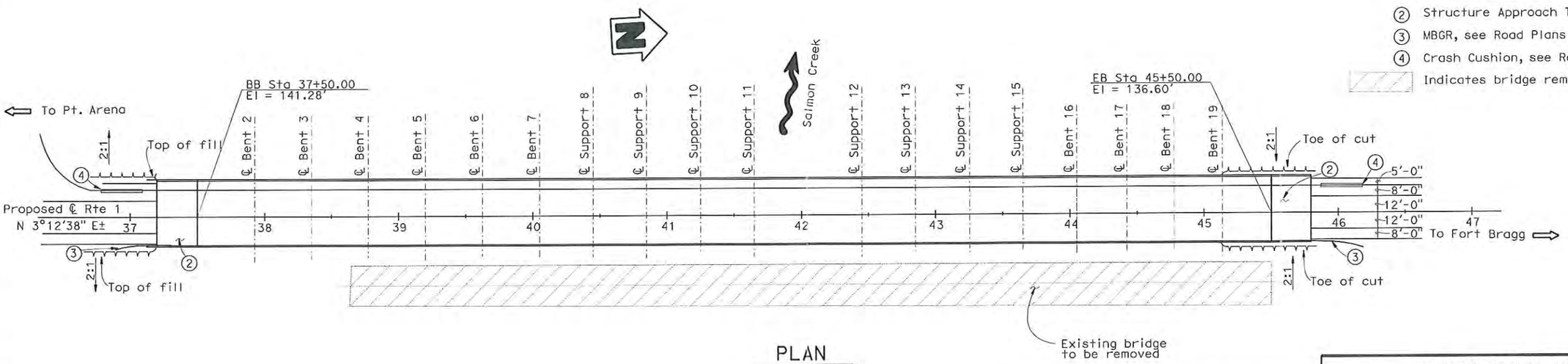

PLAN

1" = 80'

DESIGNED BY Wendy Hou	DATE 01-26-09	STRUCTURE DESIGN BRANCH 7	ALTERNATIVE 1D
DRAWN BY Gerald Dickerson	DATE 05-14-09		PLANNING STUDY 1 OF 2
CHECKED BY X	DATE X		SALMON CREEK BRIDGE (REPLACE)
APPROVED David Soon	DATE 05-18-09		BRIDGE NO. 10-0134 / CU 01
			SCALE: As noted / EA 40140k

FILE => 01-40140k_1d_gp1.dgn

STRUCTURES DESIGN ADVANCE PLANNING STUDY SHEET (ENGLISH) (REV. 10/25/05)

USERNAME => s136697 DATE PLOTTED => 19-MAY-2009 TIME PLOTTED => 09:12

STATE OF CALIFORNIA - DEPARTMENT OF TRANSPORTATION - DIVISION OF STRUCTURES

DIST.	COUNTY	ROUTE	POST MILE
01	Men	1	

To get to the Caltrans web site, go to: http://www.dot.ca.gov

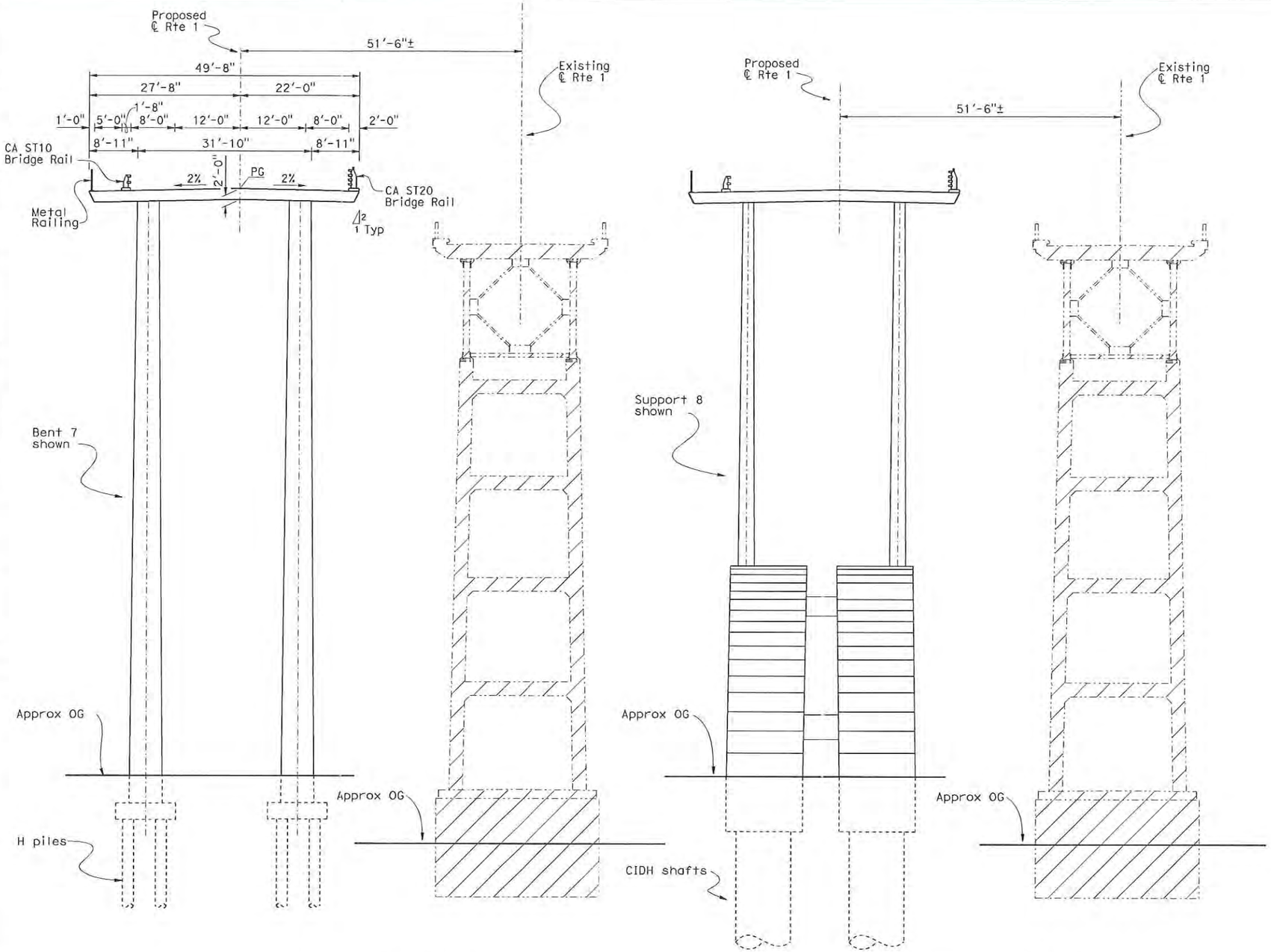

TYPICAL SECTION A

1" = 20'

TYPICAL SECTION B

1" = 20'

Design Assumptions:

1. Hydraulic information was based on "Preliminary Hydraulic Report (PHR) for Salmon Creek (Br. No. 10-0134)" memo dated Nov. 24, 2008.
   - High Tide elevation is assumed to be 9.0' based of the 1949 bridge As-Builts.
   - Q50 and Q100 water surface elevations (WSE) are 8.4' and 9.2', respectively. The WSEs were based on provided contour & not measured channel cross-section. Q50 and Q100 WSEs calculated from measured channel cross-section will be required for the final design of the replacement bridge.
2. Foundation Information was based on the " Structure Preliminary Geotechnical Report" memo dated Dec. 11, 2008.
   - Assumed foundation types: Abutments - driven steel "H" piles. Piers - 8' to 10' diameter CIDH shafts founded in bedrock.
   - A settlement period may be required for new approach embankments.
3. Deck drainage discharge shall be at least 20' from the limits of the creek at high tide.
4. The listed assumed environmental restrictions were taken from the (nearby) Noyo River Bridge (replacement) project (EA 01-378004).
   - Work in Salmon Creek from June 1st to October 15th only, due to fish spawning.
5. Limits of removal:
   - Abutment 1 and Autment 6 remove existing structure to 3 feet below finish grade.
   - Pier 2,3,4, and 5 remove to bottom of footing. All piles to stay in place.
6. Cast-in-place construction supported on falsework. Maximum falsework heigh will be approximately 130 feet at Salmon Creek. A wooden trestle will be build accross Salmon Creek to support falsework.

Notes:

—··— Indicates existing

▨ Indicates limits of removal

DESIGNED BY Wendy Hou	DATE 01-29-09	STRUCTURE DESIGN BRANCH 7	ALTERNATIVE 1D
DRAWN BY Y Feng/G Dickerson	DATE 05-14-09		PLANNING STUDY 2 OF 2
CHECKED BY X	DATE X		SALMON CREEK BRIDGE (REPLACE)
APPROVED David Soon	DATE 05-18-09		BRIDGE NO. 10-0134 / CU 01 / SCALE: As noted / EA 40140K

USERNAME => s136697 DATE PLOTTED => 19-MAY-2009 TIME PLOTTED => 09:12

STRUCTURES DESIGN ADVANCE PLANNING STUDY SHEET (ENGLISH) (REV. 10/25/05)

FILE => 01-40140k_1d_gp2.dgn

STATE OF CALIFORNIA - DEPARTMENT OF TRANSPORTATION - DIVISION OF STRUCTURES

DIST.	COUNTY	ROUTE	POST MILE
01	Men	1	

To get to the Caltrans web site, go to: http://www.dot.ca.gov

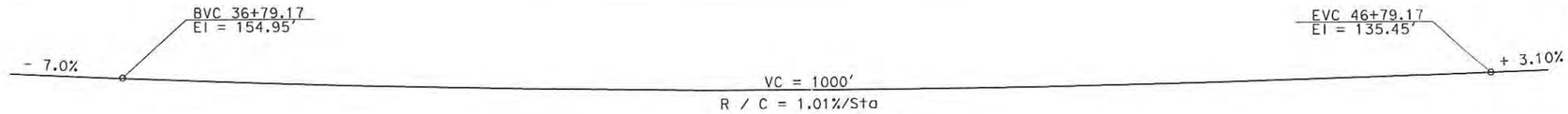

PROFILE GRADE

NO SCALE

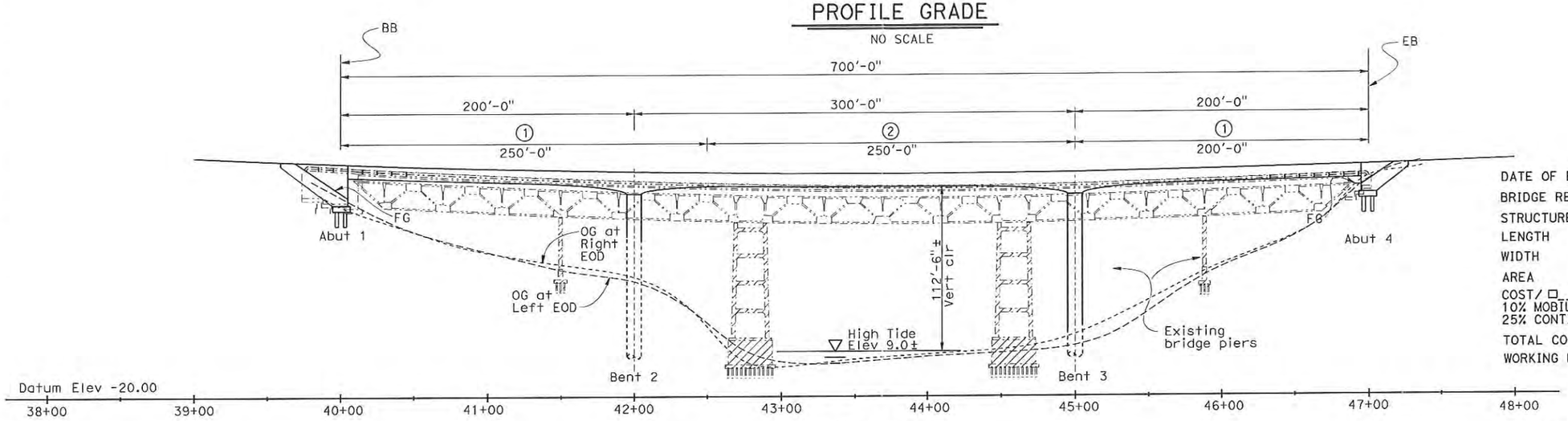

ELEVATION

1" = 80'

DATE OF ESTIMATE	4-30-2009
BRIDGE REMOVAL	= $822,000
STRUCTURE DEPTH	= 9'-0" to 15'-0"
LENGTH	= 700'-0"
WIDTH	= 49'-8"
AREA	= 34,769 SQFT
COST/ □ INCLUDING 10% MOBILIZATION & 25% CONTINGENCY	= $530.09
TOTAL COST	= $19,253,000
WORKING DAYS	= 240

Notes:

1. Limits of scuppers in barriers.
2. Limits of Deck Drain Type D-3. Drain pipe to discharge at bottom of Bent 3.
3. Structure Approach Type N (30S)
4. MBGR, see Road Plans
5. Crash Cushion, see Road Plans.

—··— Indicates existing

▨ Indicates limits of removal

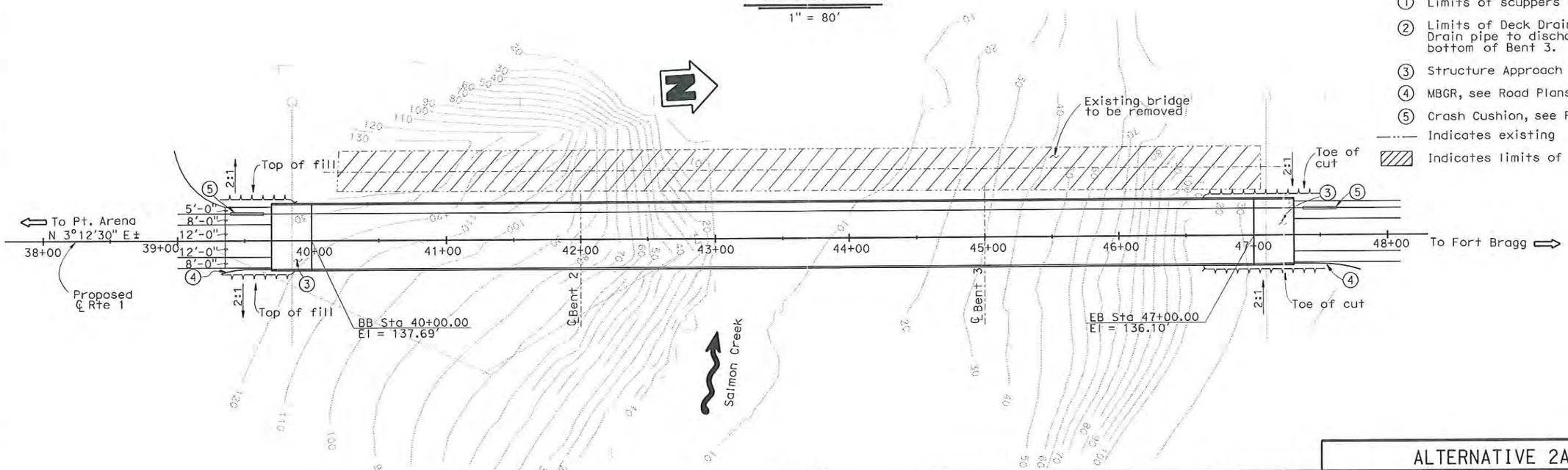

PLAN

1" = 80'

DESIGNED BY David Soon	DATE 01-15-09	STRUCTURE DESIGN BRANCH 7	ALTERNATIVE 2A
DRAWN BY Y. Feng/G. Dickerson	DATE 03-26-09		PLANNING STUDY 1 OF 2
CHECKED BY X	DATE X		SALMON CREEK BRIDGE (REPLACE)
APPROVED David Soon	DATE 05-18-09		BRIDGE NO. 10-0134 / CU 01
			SCALE: As noted / EA 40140k

USERNAME => s136697 DATE PLOTTED => 19-MAY-2009 TIME PLOTTED => 09:12

STRUCTURES DESIGN ADVANCE PLANNING STUDY SHEET (ENGLISH) (REV. 10/25/05)

FILE => 01-40140k_2a_gp1.dgn

STATE OF CALIFORNIA - DEPARTMENT OF TRANSPORTATION - DIVISION OF STRUCTURES

DIST	COUNTY	ROUTE	POST MILE
01	Men	1	

To get to the Caltrans web site, go to: http://www.dot.ca.gov

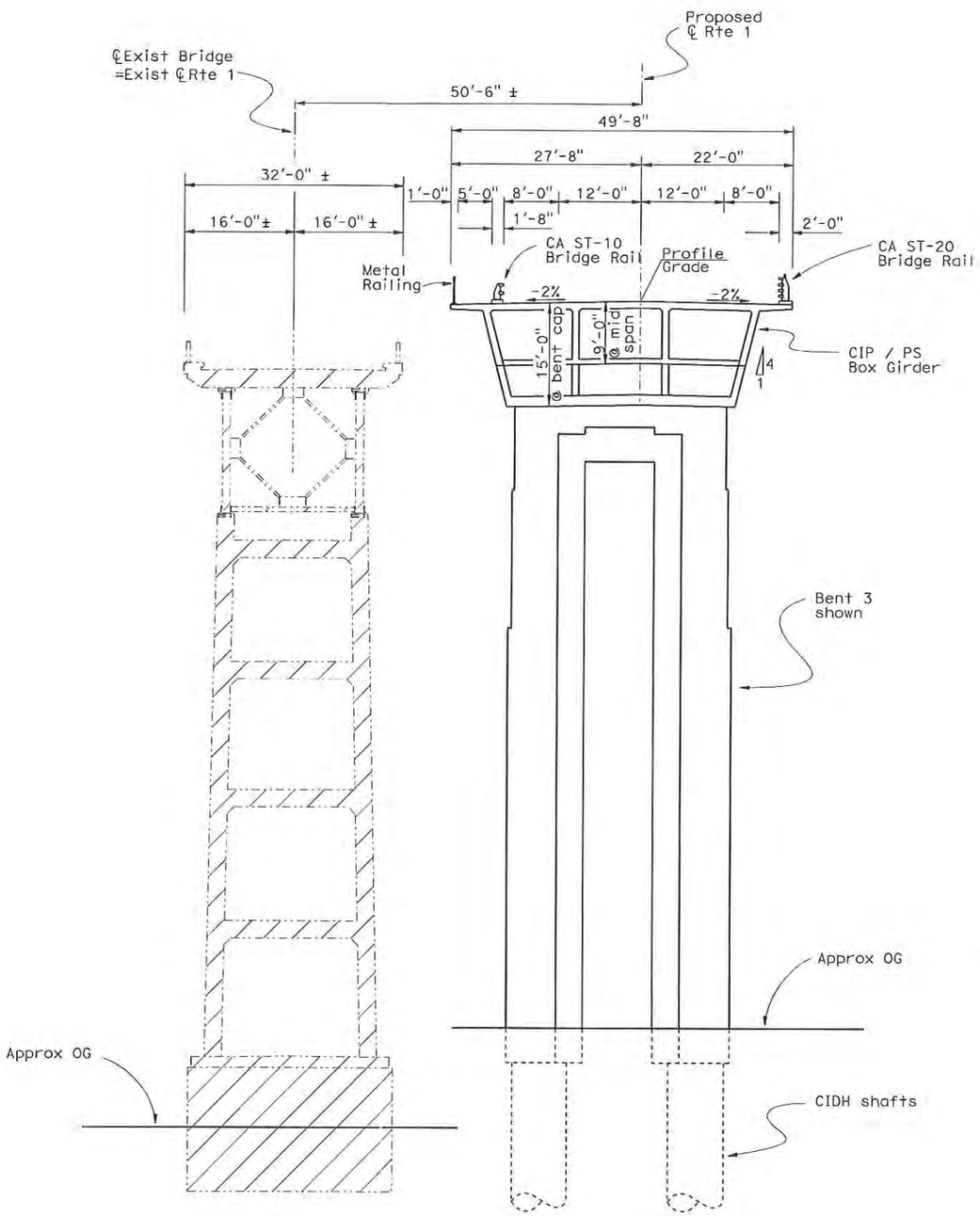

TYPICAL SECTION
1" = 20'

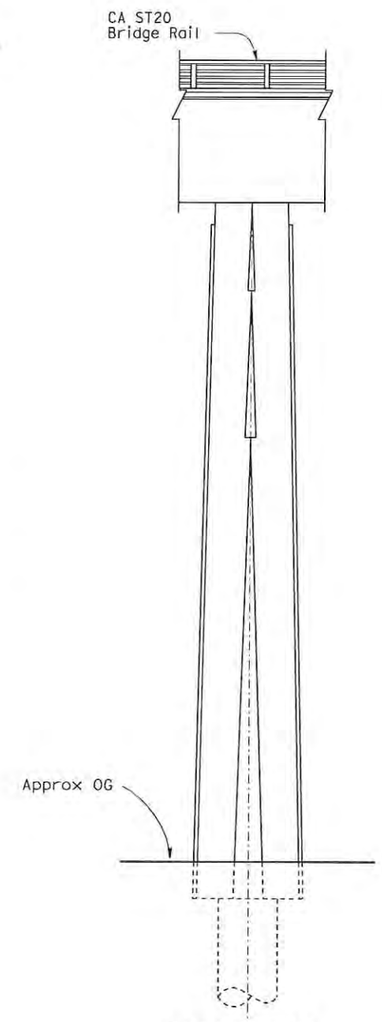

ELEVATION
1" = 20'

Design Assumptions:

1. Hydraulic information was based on "Preliminary Hydraulic Report (PHR) for Salmon Creek (Br. No. 10-0134)" memo dated Nov. 24, 2008.
   - High Tide elevation is assumed to be 9.0' based of the 1949 bridge As-Builts.
   - Q50 and Q100 water surface elevations (WSE) are 8.4' and 9.2', respectively. The WSEs were based on provided contour & not measured channel cross-section. Q50 and Q100 WSEs calculated from measured channel cross-section will be required for the final design of the replacement bridge.
2. Foundation Information was based on the " Structure Preliminary Geotechnical Report" memo dated Dec. 11, 2008.
   - Assumed foundation types: Abutments - driven steel "H" piles. Piers - 8' to 10' diameter CIDH shafts founded in bedrock.
   - A settlement period may be required for new approach embankments.
3. Deck drainage discharge shall be at least 20' from the limits of the creek at high tide.
4. The listed assumed environmental restrictions were taken from the (nearby) Noyo River Bridge (replacement) project (EA 01-378004).
   - Work in Salmon Creek from June 1st to October 15th only, due to fish spawning.
5. Limits of removal:
   - Abutment 1 and Autment 6 remove existing structure to 3 feet below finish grade.
   - Piers 2, 3, 4, and 5 remove to bottom of footing. All piles to stay in place.
6. Cast-in-place construction supported on falsework. Maximum falsework heigh will be approximately 130 feet at Salmon Creek. A wooden trestle will be build accross Salmon Creek to support falsework.
7. Telephone lines and power line are present on the east side of the existing structure. These utilities may require relocation.

Notes:

—··— Indicates existing

▨ Indicates limits of removal

DESIGNED BY David Soon	DATE 03-11-09	STRUCTURE DESIGN BRANCH 7	ALTERNATIVE 2A
DRAWN BY Y. Feng/G. Dickerson	DATE 03-11-09		PLANNING STUDY 2 OF 2
CHECKED BY X	DATE X		SALMON CREEK BRIDGE (REPLACE)
APPROVED David Soon	DATE 05-18-09		BRIDGE NO. 10-0134 / CU 01 / SCALE: As noted / EA 40140k

USERNAME => a136697 DATE PLOTTED => 19-MAY-2009 TIME PLOTTED => 09:12

STRUCTURES DESIGN ADVANCE PLANNING STUDY SHEET (ENGLISH) (REV. 10/25/05)

FILE => 01-40140k_2a_gp2.dgn

STATE OF CALIFORNIA - DEPARTMENT OF TRANSPORTATION - DIVISION OF STRUCTURES

DIST.	COUNTY	ROUTE	POST MILE
01	Men	1	

To get to the Caltrans web site, go to: http://www.dot.ca.gov

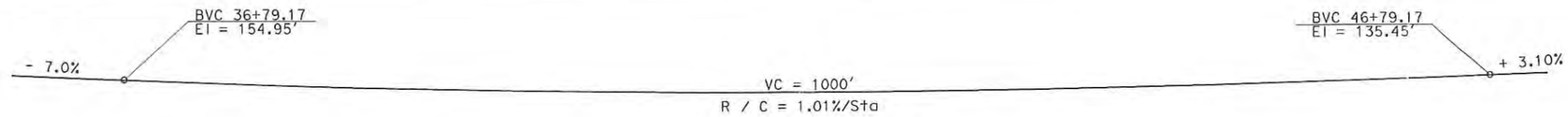

PROFILE GRADE

NO SCALE

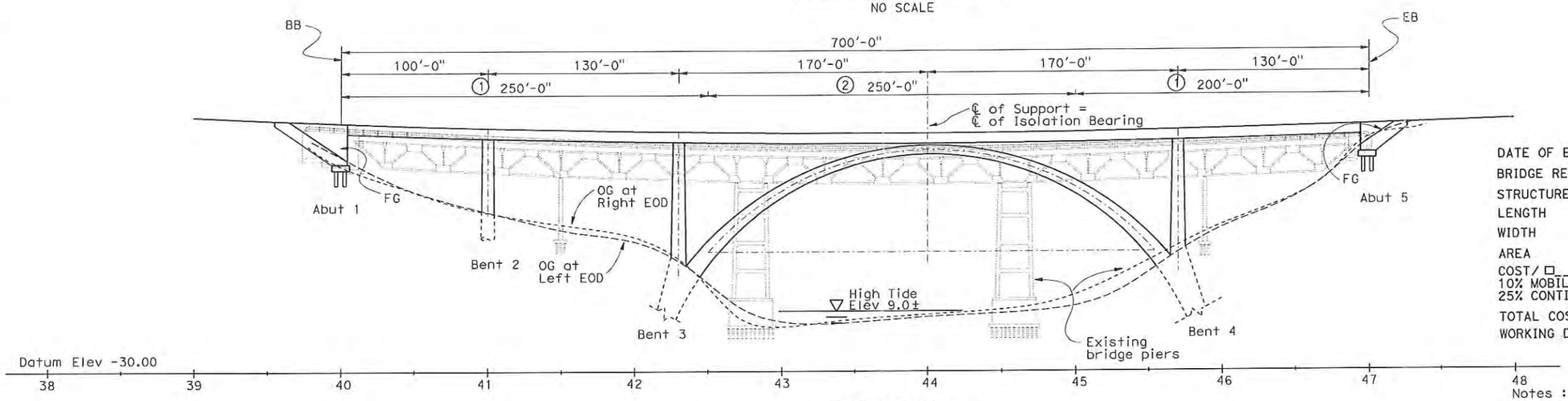

ELEVATION

1" = 80'

DATE OF ESTIMATE	5-12-2009
BRIDGE REMOVAL	= $822,000
STRUCTURE DEPTH	= 6'-9"
LENGTH	= 700'-0"
WIDTH	= 49.67'
AREA	= 34,769 SQFT
COST/ □ INCLUDING 10% MOBILIZATION & 25% CONTINGENCY	= $752.45
TOTAL COST	= $26,984,000
WORKING DAYS	= 280

Notes :

① Limits of scuppers in barriers.

② Limits of Deck Drain Type D-3. Drain pipe to discharge at bottom of Bent 3.

③ Structure Approach Type N (30S)

④ MBGR, see Road Plans

⑤ Crash Cushion, see Road Plans.

Indicates bridge removal

□ Indicates Deck Drain Type D-3

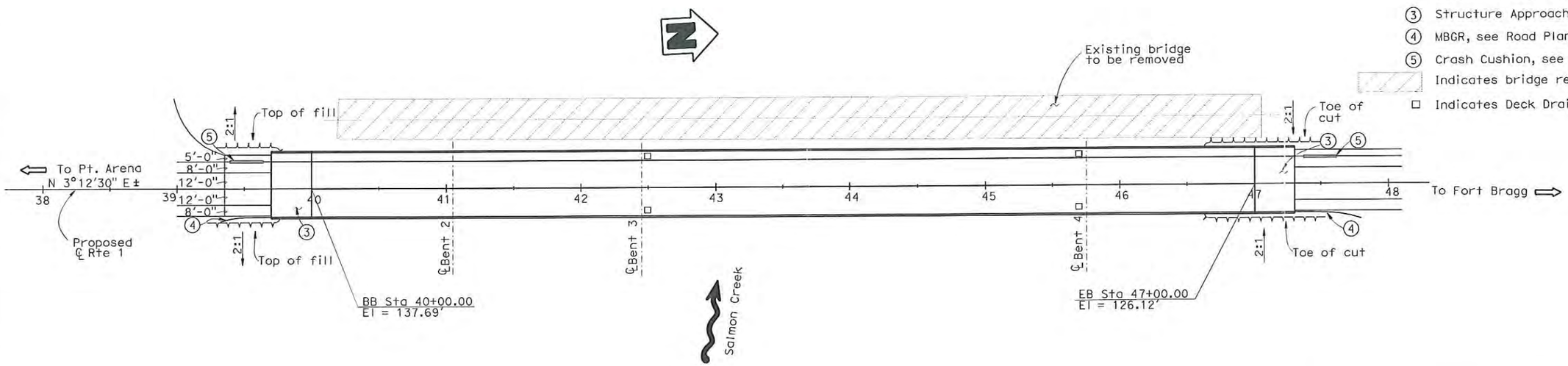

PLAN

1" = 80'

DESIGNED BY Wendy Hou	DATE 01-29-09	STRUCTURE DESIGN BRANCH 7	ALTERNATIVE 2B
DRAWN BY Y Feng/G Dickerson	DATE 05-14-09		PLANNING STUDY 1 OF 2
CHECKED BY X	DATE X		SALMON CREEK BRIDGE (REPLACE)
APPROVED David Soon	DATE 05-18-09		BRIDGE NO. 10-0134 / CU 01
			SCALE: As noted / EA 40140k

USERNAME => s136697 DATE PLOTTED => 19-MAY-2009 TIME PLOTTED => 09:12

STRUCTURES DESIGN ADVANCE PLANNING STUDY SHEET (ENGLISH) (REV. 10/25/05)

FILE => 01-40140k_2b_gp1.dgn

STATE OF CALIFORNIA - DEPARTMENT OF TRANSPORTATION - DIVISION OF STRUCTURES

DIST.	COUNTY	ROUTE	POST MILE
01	Men	1	

To get to the Caltrans web site, go to: http://www.dot.ca.gov

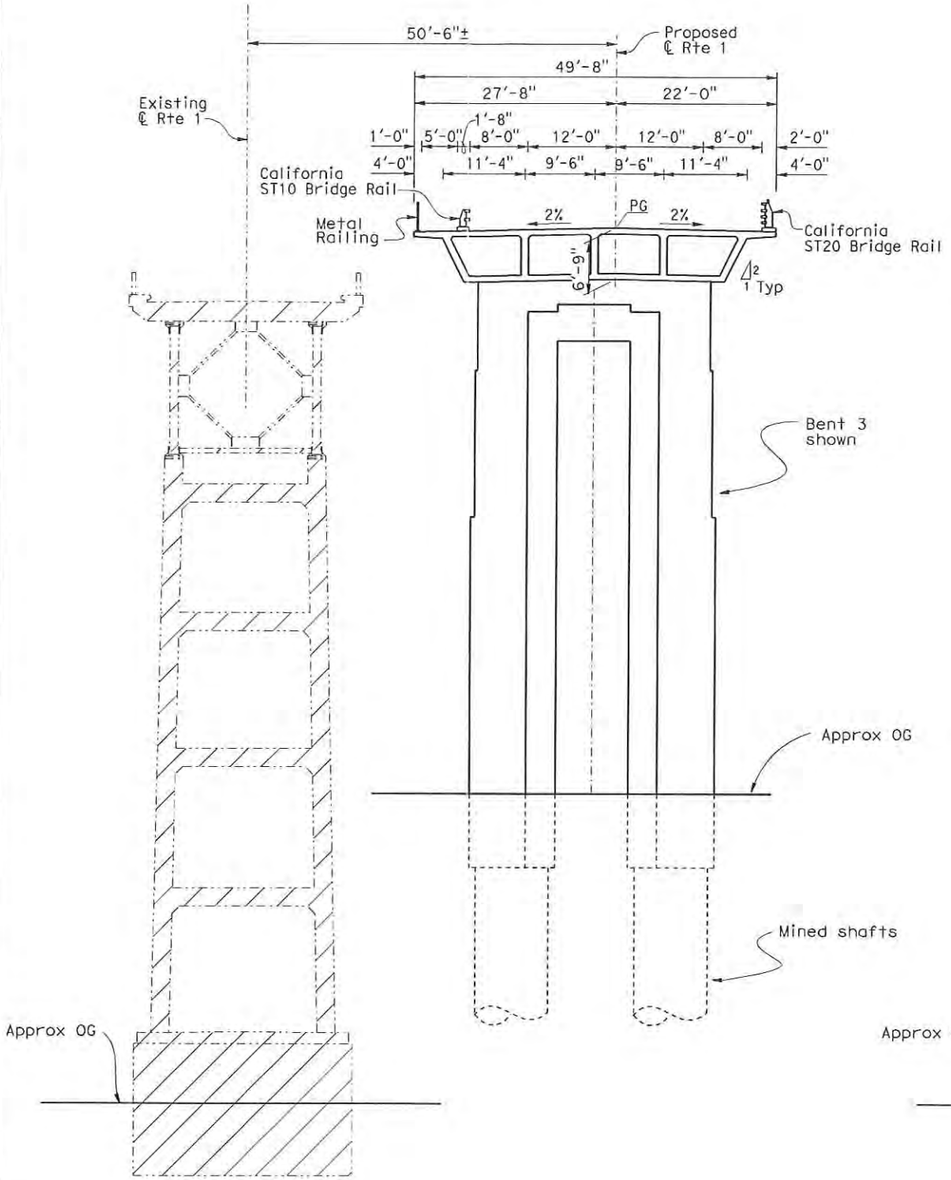

TYPICAL SECTION A

1" = 20'

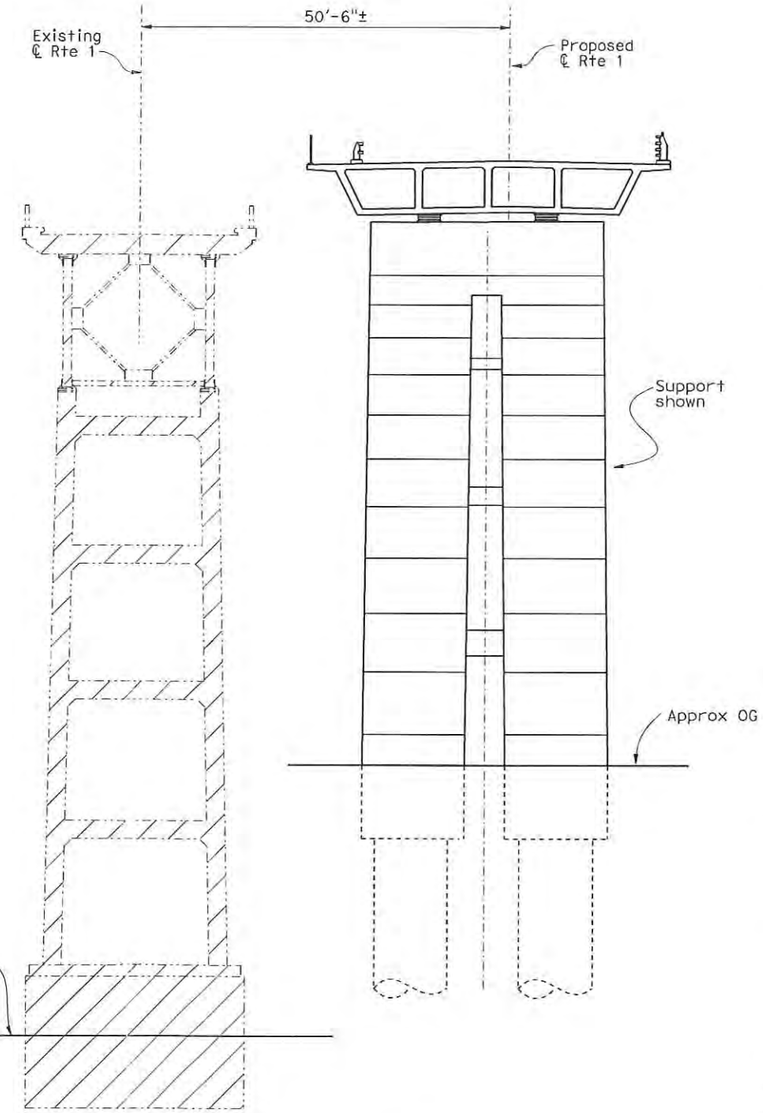

TYPICAL SECTION B

1" = 20'

Design Assumptions:

1. Hydraulic information was based on "Preliminary Hydraulic Report (PHR) for Salmon Creak (Br. No. 10-0134)" memo dated Nov. 24, 2008.
   - High Tide elevation is assumed to be 9.0' based of the 1949 bridge As-Builts.
   - Q50 and Q100 water surface elevations (WSE) are 8.4' and 9.2', respectively. The WSEs were based on provided contour & not measured channel cross-section. Q50 and Q100 WSEs calculated from measured channel cross-section will be required for the final design of the replacement bridge.
2. Foundation Information was based on the " Structure Preliminary Geotechnical Report" memo dated Dec. 11, 2008.
   - Assumed foundation types: Abutments - driven steel "H" piles. Piers - 8' to 10' diameter CIDH shafts founded in bedrock.
   - A settlement period may be required for new approach embankments.
3. Deck drainage discharge shall be at least 20' from the limits of the creek at high tide.
4. The listed assumed environmental restrictions were taken from the (nearby) Noyo River Bridge (replacement) project (EA 01-378004).
   - Work in Salmon Creek from June 1st to October 15th only, due to fish spawning.
5. Limits of removal:
   - Abutment 1 and Autment 6 remove existing structure to 3 feet below finish grade.
   - Pier 2,3,4, and 5 remove to bottom of footing. All piles to stay in place.
6. Cast-in-place construction supported on falsework. Maximum falsework heigh will be approximately 130 feet at Salmon Creek. A wooden trestle will be build accross Salmon Creek to support falsework.
7. Telephone lines and power line are present on the east side of the existing structure. These utilities may require relocation.

Notes:

—·—· Indicates existing

▨ Indicates limits of removal

DESIGNED BY Wendy Hou	DATE 01-27-09	STRUCTURE DESIGN BRANCH 7	ALTERNATIVE 2B
DRAWN BY Yingjue Feng	DATE 01-27-09		PLANNING STUDY 2 OF 2
CHECKED BY X	DATE X		SALMON CREEK BRIDGE (REPLACE)
APPROVED David Soon	DATE 05-18-09		BRIDGE NO. 10-0134 / CU 01
			SCALE: As noted / EA 40140K

USERNAME => s136697 DATE PLOTTED => 19-MAY-2009 TIME PLOTTED => 09:12

STRUCTURES DESIGN ADVANCE PLANNING STUDY SHEET (ENGLISH) (REV. 10/25/05)

FILE => 01-40140k_2b_gp2.dgn

STATE OF CALIFORNIA - DEPARTMENT OF TRANSPORTATION - DIVISION OF STRUCTURES

DIST.	COUNTY	ROUTE	POST MILE
01	Men	1	

To get to the Caltrans web site, go to: http://www.dot.ca.gov

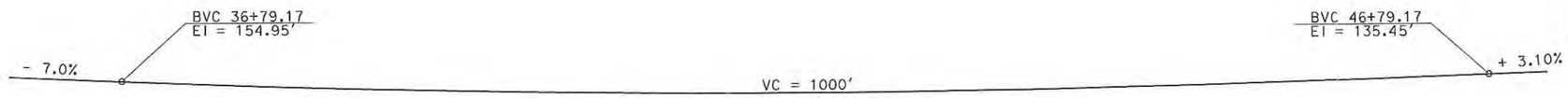

PROFILE GRADE

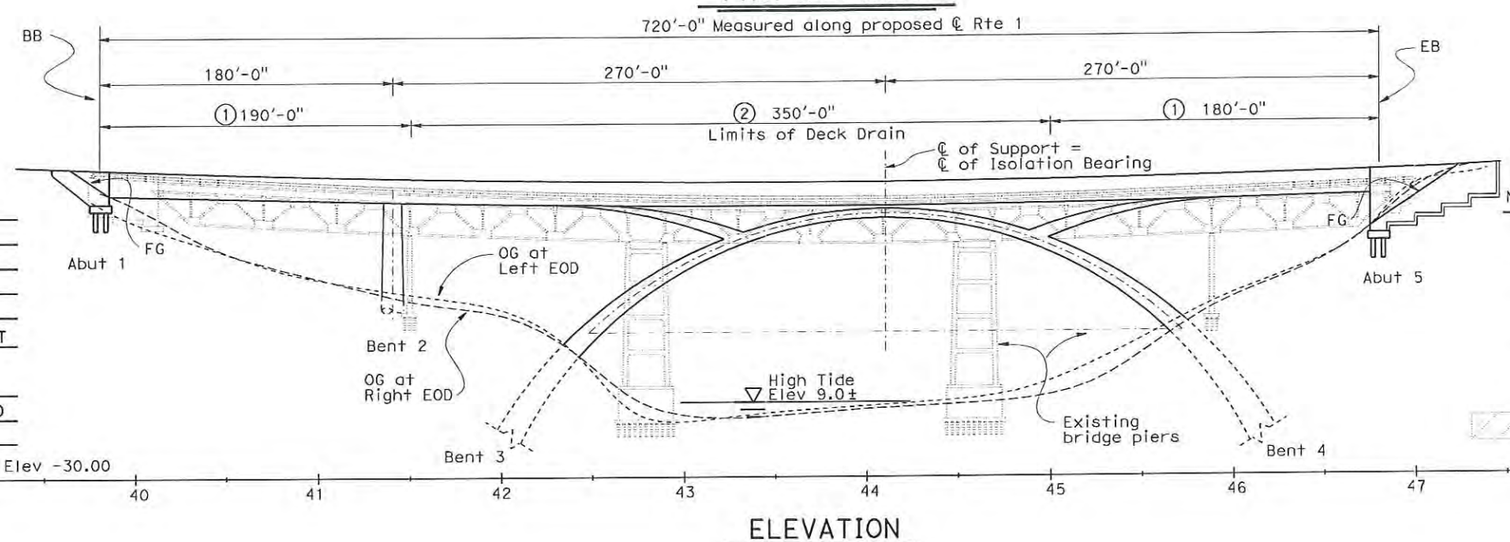

ELEVATION

1" = 80'

DATE OF ESTIMATE		5-12-2009
BRIDGE REMOVAL	=	$822,000
STRUCTURE DEPTH	=	12'-0"
LENGTH	=	720'-0"
WIDTH	=	49.67'
AREA	=	35,762 SQFT
COST/ ☐_ INCLUDING 10% MOBILIZATION & 25% CONTINGENCY	=	$734.09
TOTAL COST	=	$27,075,000
WORKING DAYS	=	240

Notes :

1. Limits of scuppers in barriers.
2. Limits of Deck Drain Type D-3. Drain pipe to discharge at bottom of Bent 3.
3. Structure Approach Type N (30S)
4. MBGR, see Road Plans
5. Crash Cushion, see Road Plans.

Indicates bridge removal

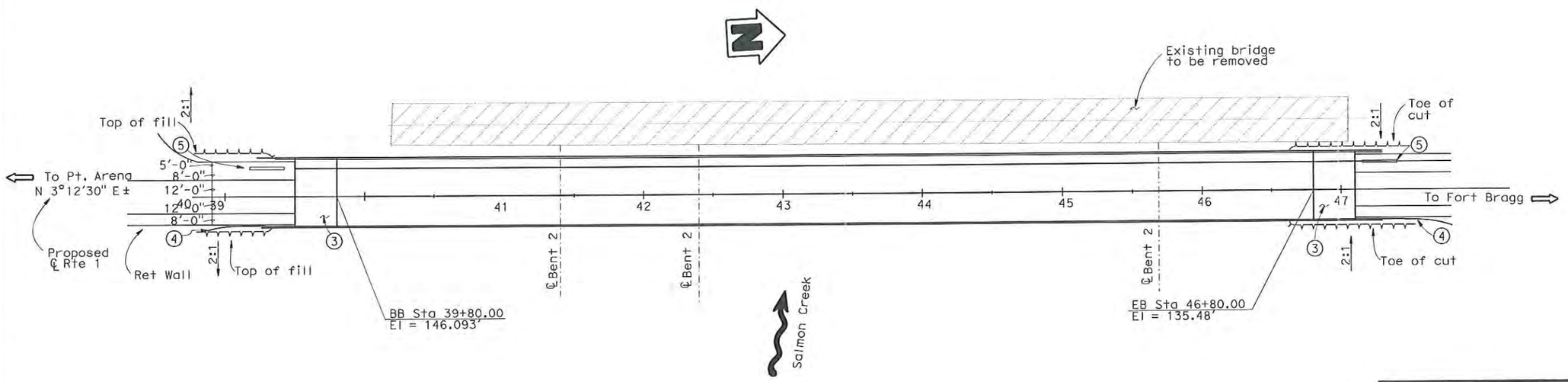

PLAN

1" = 80'

DESIGNED BY Wendy Hou	DATE 01-29-09	STRUCTURE DESIGN BRANCH 7	ALTERNATIVE 2C
DRAWN BY Y Feng/G Dickerson	DATE 05-14-09		PLANNING STUDY 1 OF 2
CHECKED BY X	DATE X		SALMON CREEK BRIDGE (REPLACE)
APPROVED David Soon	DATE 05-18-09		BRIDGE NO. 10-0134 / CU 01 / SCALE: As noted / EA 40140k

FILE => 01-40140k_2c_gp1.dgn

STRUCTURES DESIGN ADVANCE PLANNING STUDY SHEET (ENGLISH) (REV. 10/25/05)

USERNAME => s136697 DATE PLOTTED => 19-MAY-2009 TIME PLOTTED => 09:13

STATE OF CALIFORNIA - DEPARTMENT OF TRANSPORTATION - DIVISION OF STRUCTURES

DIST	COUNTY	ROUTE	POST MILE
01	Men	1	

To get to the Caltrans web site, go to: http://www.dot.ca.gov

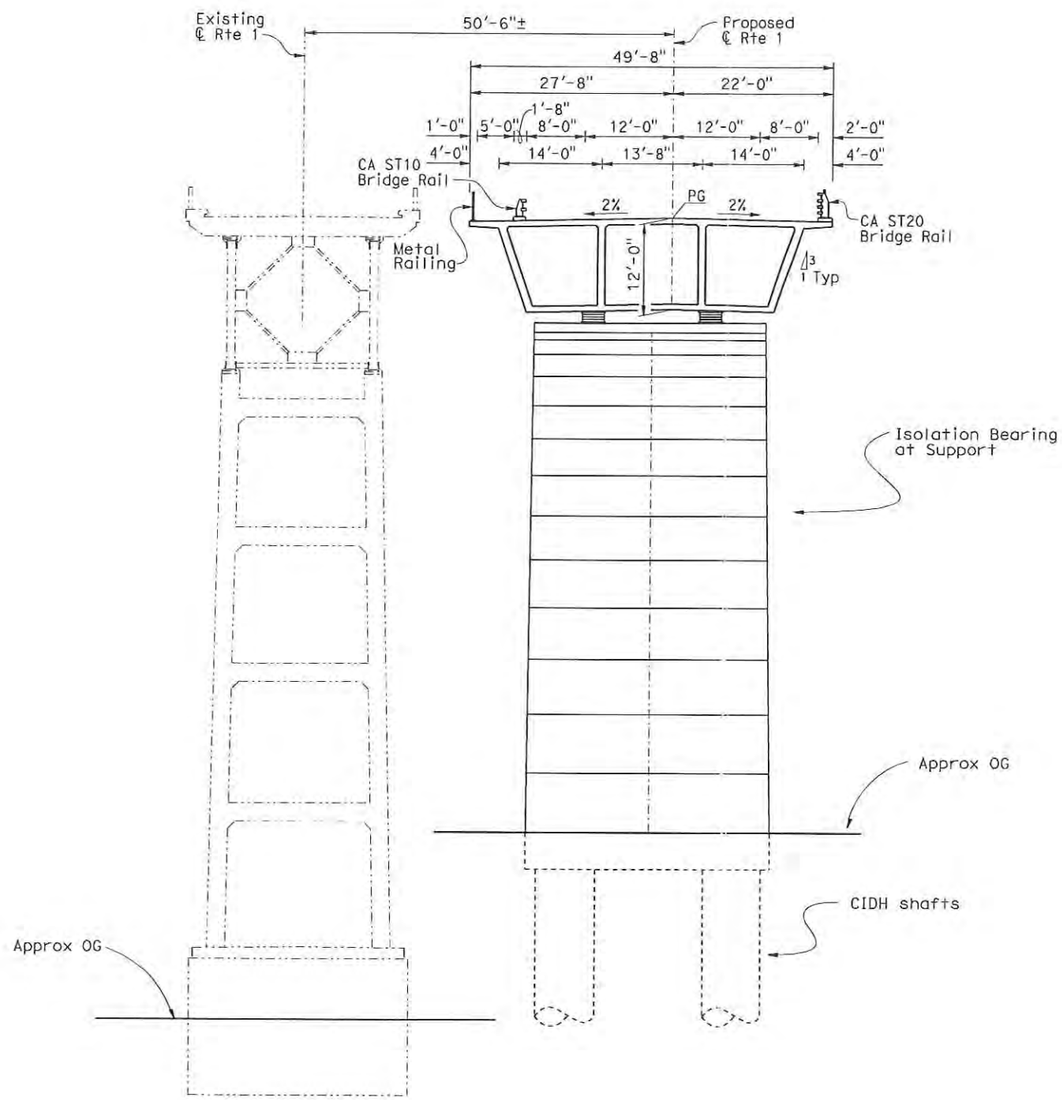

TYPICAL SECTION

1" = 20'

Design Assumptions:

1. Hydraulic information was based on "Preliminary Hydraulic Report (PHR) for Salmon Creek (Br. No. 10-0134)" memo dated Nov. 24, 2008.
   - High Tide elevation is assumed to be 9.0' based of the 1949 bridge As-Builts.
   - Q50 and Q100 water surface elevations (WSE) are 8.4' and 9.2', respectively. The WSEs were based on provided contour & not measured channel cross-section. Q50 and Q100 WSEs calculated from measured channel cross-section will be required for the final design of the replacement bridge.
2. Foundation Information was based on the " Structure Preliminary Geotechnical Report" memo dated Dec. 11, 2008.
   - Assumed foundation types: Abutments - driven steel "H" piles. Piers - 8' to 10' diameter CIDH shafts founded in bedrock.
   - A settlement period may be required for new approach embankments.
3. Deck drainage discharge shall be at least 20' from the limits of the creek at high tide.
4. The listed assumed environmental restrictions were taken from the (nearby) Noyo River Bridge (replacement) project (EA 01-378004).
   - Work in Salmon Creek from June 1st to October 15th only, due to fish spawning.
5. Limits of removal:
   - Abutment 1 and Autment 6 remove existing structure to 3 feet below finish grade.
   - Pier 2,3,4, and 5 remove to bottom of footing. All piles to stay in place.
6. Cast-in-place construction supported on falsework. Maximum falsework heigh will be approximately 130 feet at Salmon Creek. A wooden trestle will be build accross Salmon Creek to support falsework.
7. Telephone lines and power line are present on the east side of the existing structure. These utilities may require relocation.

Notes:

—··— Indicates existing

▨ Indicates limits of removal

DESIGNED BY Wendy Hou	DATE 02-02-09	STRUCTURE DESIGN BRANCH 7	ALTERNATIVE 2C
DRAWN BY Yingjue Feng	DATE 02-02-09		PLANNING STUDY 2 OF 2
CHECKED BY X	DATE X		SALMON CREEK BRIDGE (REPLACE)
APPROVED David Soon	DATE 05-18-09		BRIDGE NO. 10-0134 / CU 01
			SCALE: As noted / EA 40140k

USERNAME => s136697 DATE PLOTTED => 19-MAY-2009 TIME PLOTTED => 09:13

STRUCTURES DESIGN ADVANCE PLANNING STUDY SHEET (ENGLISH) (REV. 10/25/05)

FILE => 01-40140k_2c_gp2.dgn

STATE OF CALIFORNIA - DEPARTMENT OF TRANSPORTATION - DIVISION OF STRUCTURES

DIST.	COUNTY	ROUTE	POST MILE
01	Men	1	

To get to the Caltrans web site, go to: http://www.dot.ca.gov

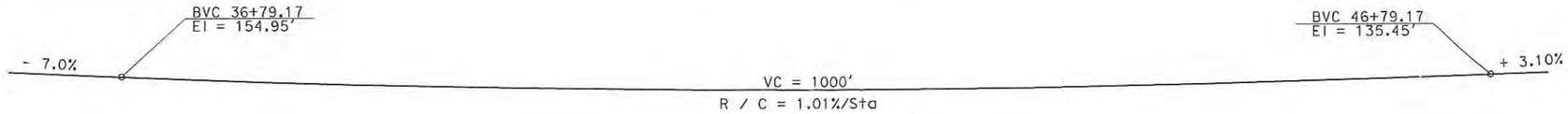

PROFILE GRADE

NO SCALE

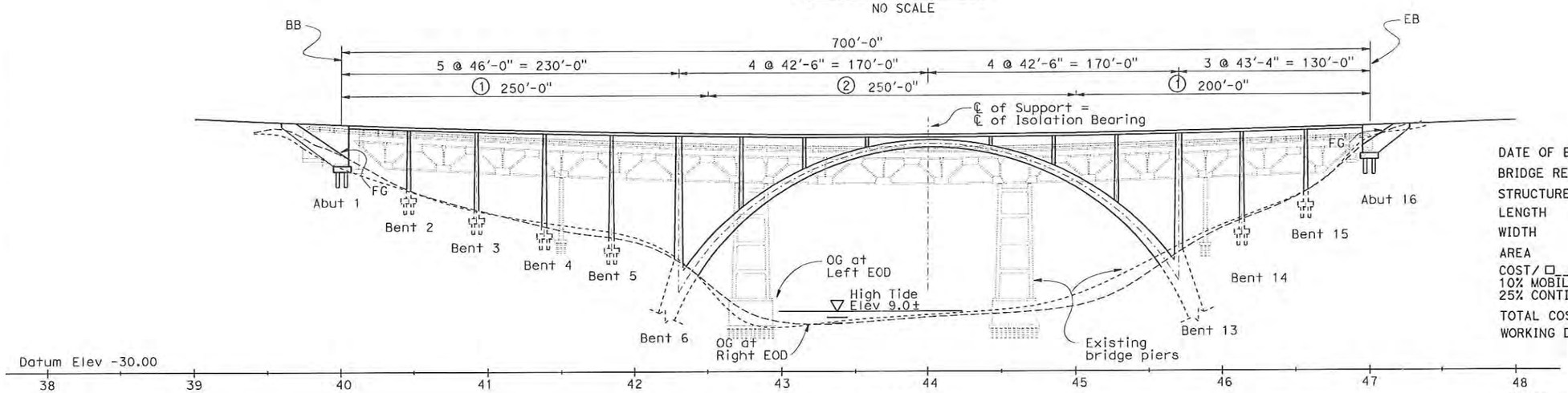

ELEVATION

1" = 80'

DATE OF ESTIMATE	5-12-2009
BRIDGE REMOVAL	= $822,000
STRUCTURE DEPTH	= 2'-0"
LENGTH	= 700'-0"
WIDTH	= 49.67'
AREA	= 34,769 SQFT
COST/ □_ INCLUDING 10% MOBILIZATION & 25% CONTINGENCY	= $634.85
TOTAL COST	= $22,895,000
WORKING DAYS	= 220

Notes :

1. Limits of scuppers in barriers.
2. Limits of Deck Drain Type D-3. Drain pipe to discharge at bottom of Bent 3.
3. Structure Approach Type N (30S)
4. MBGR, see Road Plans
5. Crash Cushion, see Road Plans.

Indicates bridge removal

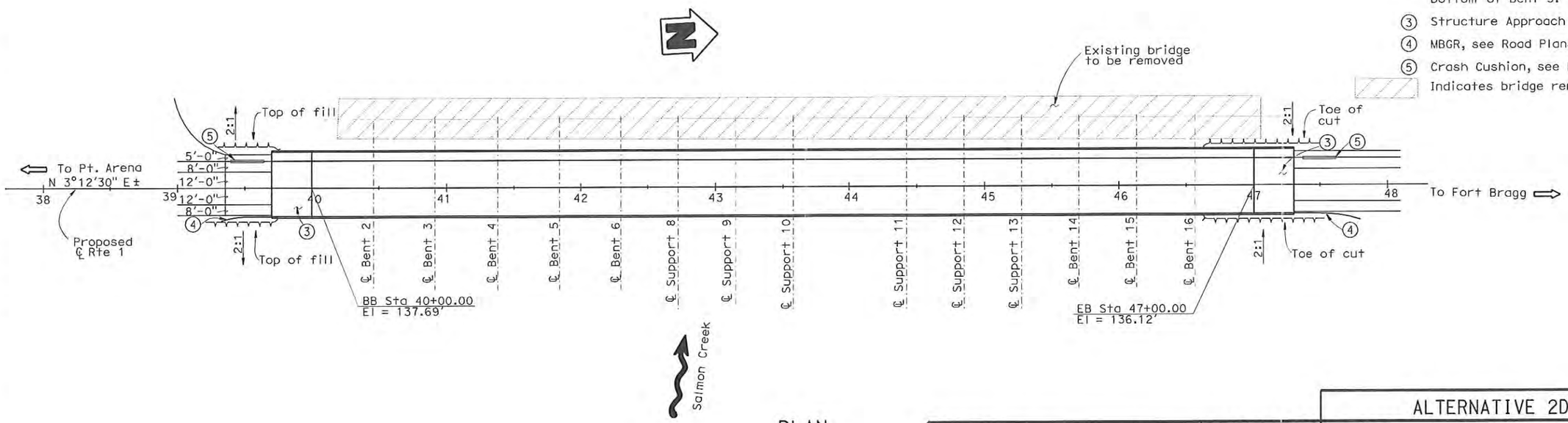

PLAN

1" = 80'

DESIGNED BY Wendy Hou	DATE 1-30-09	STRUCTURE DESIGN BRANCH 7	ALTERNATIVE 2D
DRAWN BY Y Feng/G Dickerson	DATE 5-14-09		PLANNING STUDY 1 OF 2
CHECKED BY X	DATE X		SALMON CREEK BRIDGE (REPLACE)
APPROVED X	DATE X		BRIDGE NO. 10-0134 / CU 01
			SCALE: As noted / EA 40140k

STRUCTURES DESIGN ADVANCE PLANNING STUDY SHEET (ENGLISH) (REV. 10/25/05)

FILE => 01-40140k_2d_gp1.dgn

USERNAME => s136697 DATE PLOTTED => 19-MAY-2009 TIME PLOTTED => 09:13

STATE OF CALIFORNIA - DEPARTMENT OF TRANSPORTATION - DIVISION OF STRUCTURES

DIST.	COUNTY	ROUTE	POST MILE
01	Men	1	

To get to the Caltrans web site, go to: http://www.dot.ca.gov

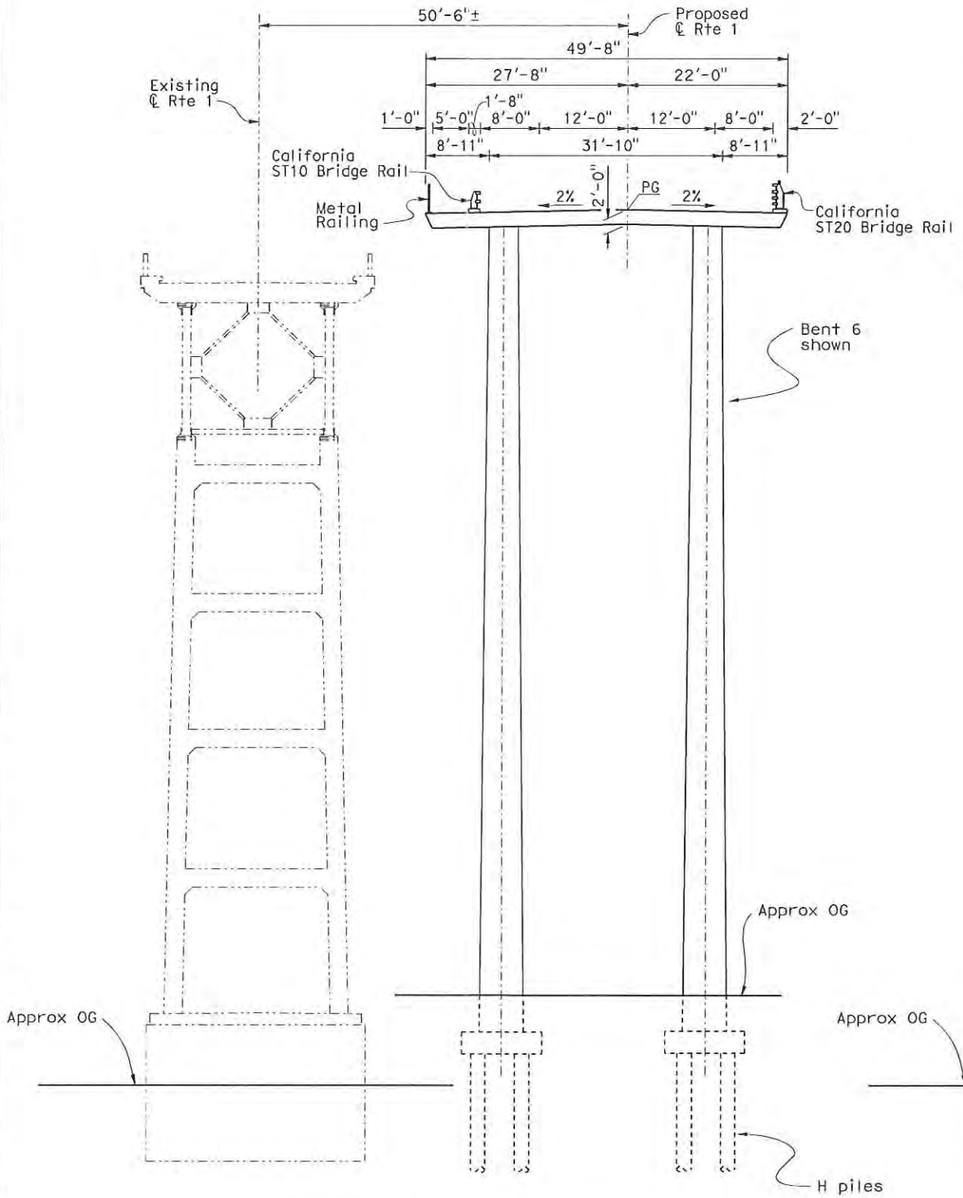

TYPICAL SECTION A

1" = 20'

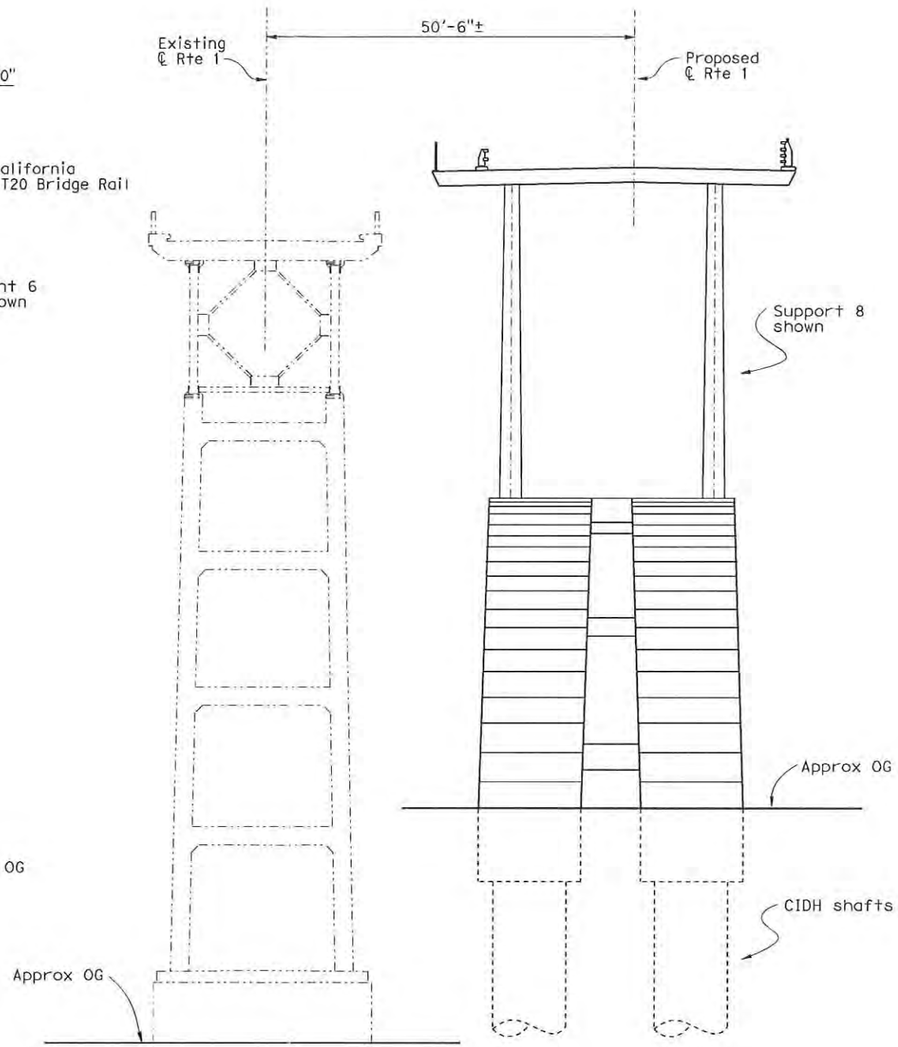

TYPICAL SECTION B

1" = 20'

Design Assumptions:

1. Hydraulic information was based on "Preliminary Hydraulic Report (PHR) for Salmon Creak (Br. No. 10-0134)" memo dated Nov. 24, 2008.
   - High Tide elevation is assumed to be 9.0' based of the 1949 bridge As-Builts.
   - Q50 and Q100 water surface elevations (WSE) are 8.4' and 9.2', respectively. The WSEs were based on provided contour & not measured channel cross-section. Q50 and Q100 WSEs calculated from measured channel cross-section will be required for the final design of the replacement bridge.
2. Foundation Information was based on the " Structure Preliminary Geotechnical Report" memo dated Dec. 11, 2008.
   - Assumed foundation types: Abutments - driven steel "H" piles. Piers - 8' to 10' diameter CIDH shafts founded in bedrock.
   - A settlement period may be required for new approach embankments.
3. Deck drainage discharge shall be at least 20' from the limits of the creek at high tide.
4. The listed assumed environmental restrictions were taken from the (nearby) Noyo River Bridge (replacement) project (EA 01-378004).
   - Work in Salmon Creek from June 1st to October 15th only, due to fish spawning.
5. Limits of removal:
   - Abutment 1 and Autment 6 remove existing structure to 3 feet below finish grade.
   - Pier 2,3,4, and 5 remove to bottom of footing. All piles to stay in place.
6. Cast-in-place construction supported on falsework. Maximum falsework heigh will be approximately 130 feet at Salmon Creek. A wooden trestle will be build accross Salmon Creek to support falsework.
7. Telephone lines and power line are present on the east side of the existing structure. These utilities may require relocation.

Notes:

—·—·— Indicates existing

▨ Indicates limits of removal

DESIGNED BY David Soon	DATE 01-29-09	STRUCTURE DESIGN BRANCH 7	ALTERNATIVE 2D
DRAWN BY Y Feng/G Dickerson	DATE 05-14-09		PLANNING STUDY 2 OF 2
CHECKED BY X	DATE X		SALMON CREEK BRIDGE (REPLACE)
APPROVED David Soon	DATE 05-18-09		BRIDGE NO. 10-0134 / CU 01 / SCALE: As noted / EA 40140k

STRUCTURES DESIGN ADVANCE PLANNING STUDY SHEET (ENGLISH) (REV. 10/25/05)

FILE => 01-40140k_2d_gp2.dgn

USERNAME => s136697 DATE PLOTTED => 19-MAY-2009 TIME PLOTTED => 09:13

STATE OF CALIFORNIA - DEPARTMENT OF TRANSPORTATION - DIVISION OF STRUCTURES

DIST.	COUNTY	ROUTE	POST MILE
01	Men	1	

To get to the Caltrans web site, go to: http://www.dot.ca.gov

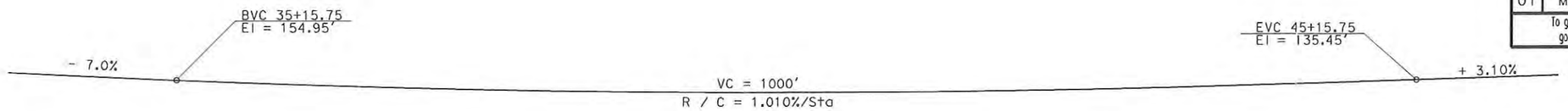

PROFILE GRADE

NO SCALE

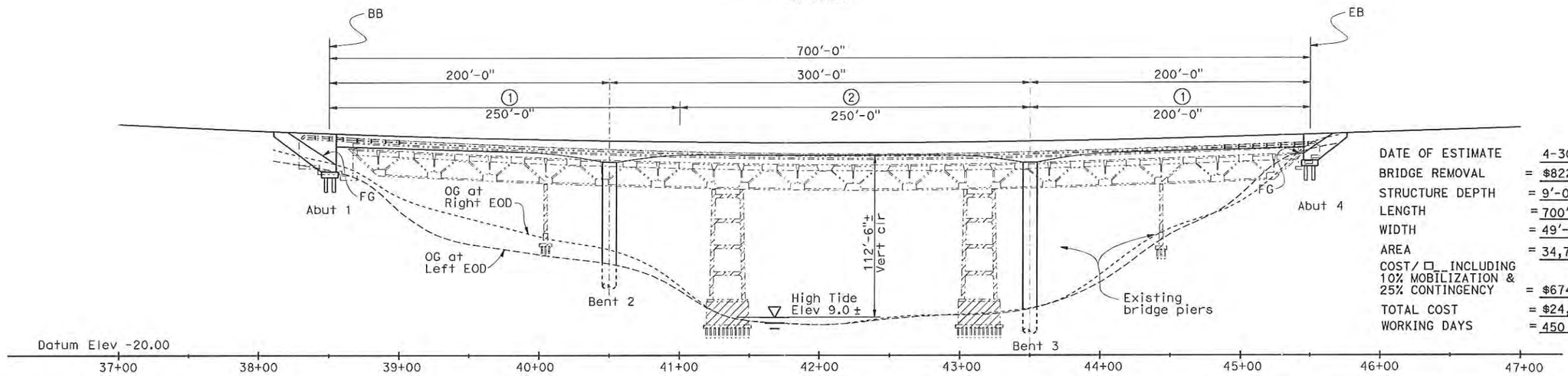

DATE OF ESTIMATE	4-30-2009
BRIDGE REMOVAL	= $822,000
STRUCTURE DEPTH	= 9'-0" to 15'-0"
LENGTH	= 700'-0"
WIDTH	= 49'-8"
AREA	= 34,769 SQFT
COST/ □__ INCLUDING 10% MOBILIZATION & 25% CONTINGENCY	= $674.78
TOTAL COST	= $24,284,000
WORKING DAYS	= 450

ELEVATION

1" = 80'

Notes:

① Limits of scuppers in barriers.

② Limits of Deck Drain Type D-3. Drain pipe to discharge at bottom of Bent 3.

③ Structure Approach Type N (30S)

④ MBGR, see Road Plans

⑤ Crash Cushion, see Road Plans.

—··— Indicates existing

▨ Indicates limits of removal

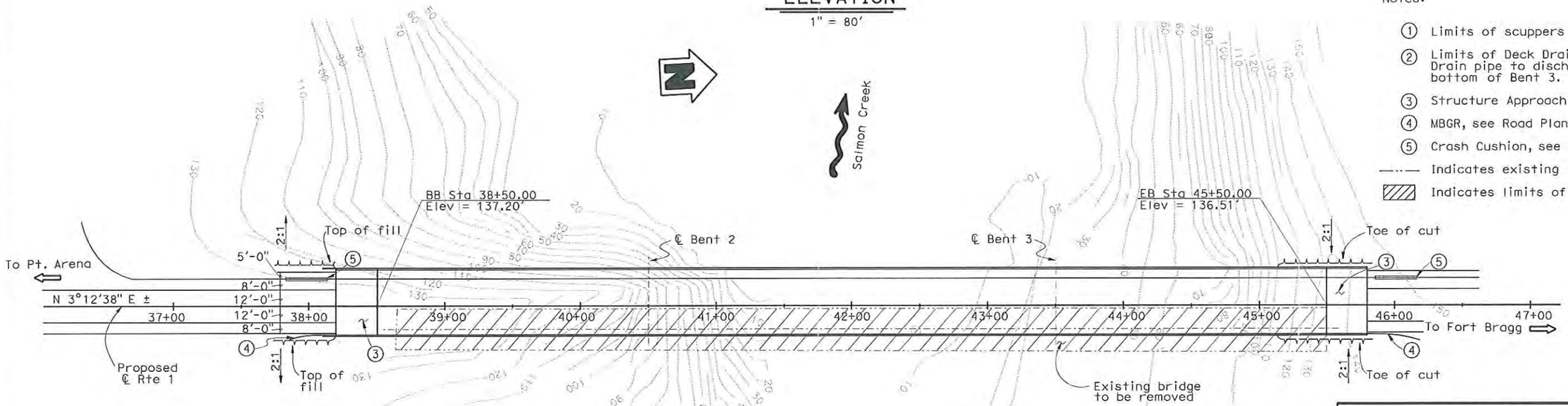

PLAN

1" = 80'

DESIGNED BY David Soon	DATE 03-11-09	STRUCTURE DESIGN BRANCH 7	ALTERNATIVE 3A
DRAWN BY Y. Feng/G. Dickerson	DATE 03-26-09		PLANNING STUDY 1 OF 2
CHECKED BY X	DATE X		SALMON CREEK BRIDGE (REPLACE)
APPROVED David Soon	DATE 05-18-09		BRIDGE NO. 10-0134 / CU 01 / SCALE: As noted / EA 40140k

STRUCTURES DESIGN ADVANCE PLANNING STUDY SHEET (ENGLISH) (REV. 10/25/05)

FILE => 01-40140k_3a_gp1.dgn

USERNAME => s136697 DATE PLOTTED => 19-MAY-2009 TIME PLOTTED => 09:13

STATE OF CALIFORNIA - DEPARTMENT OF TRANSPORTATION - DIVISION OF STRUCTURES

DIST.	COUNTY	ROUTE	POST MILE
01	Men	1	

To get to the Caltrans web site, go to: http://www.dot.ca.gov

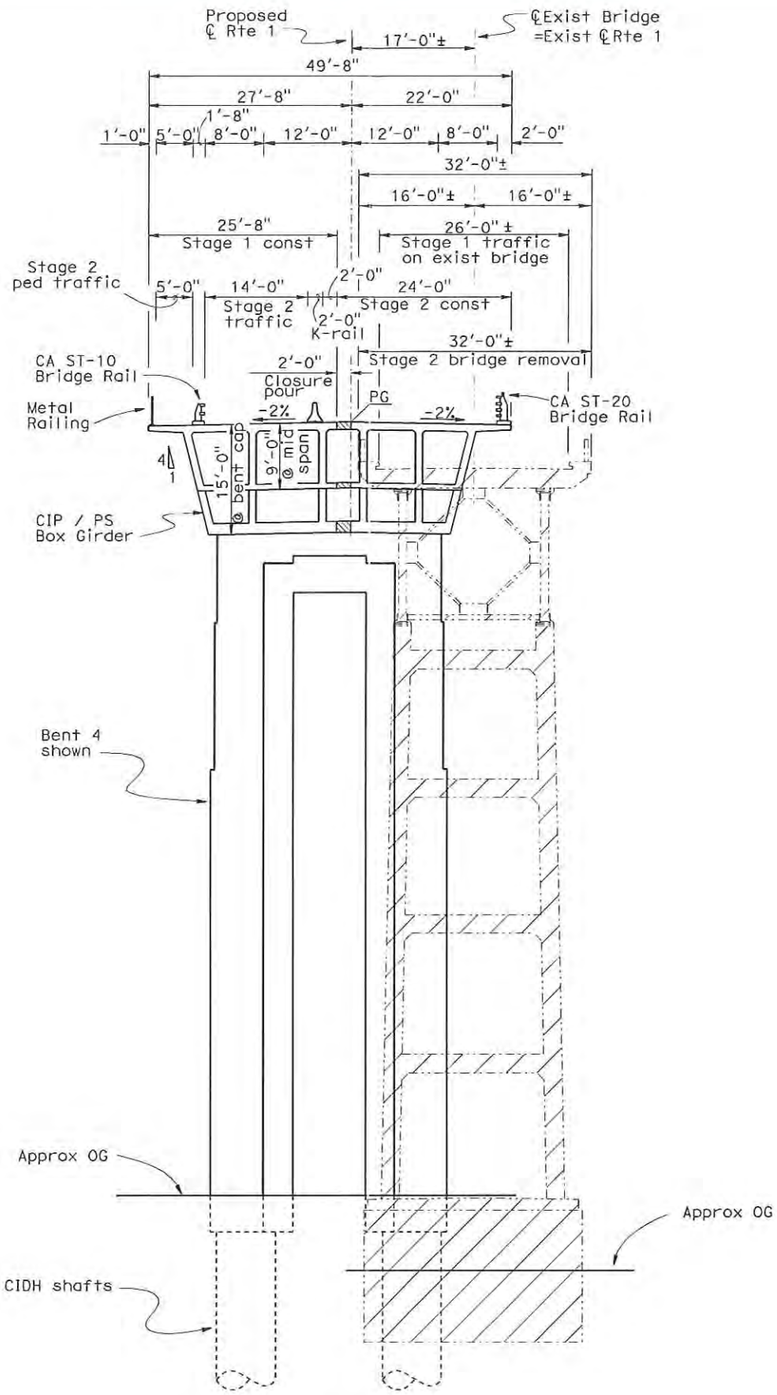

TYPICAL SECTION

1" = 20'

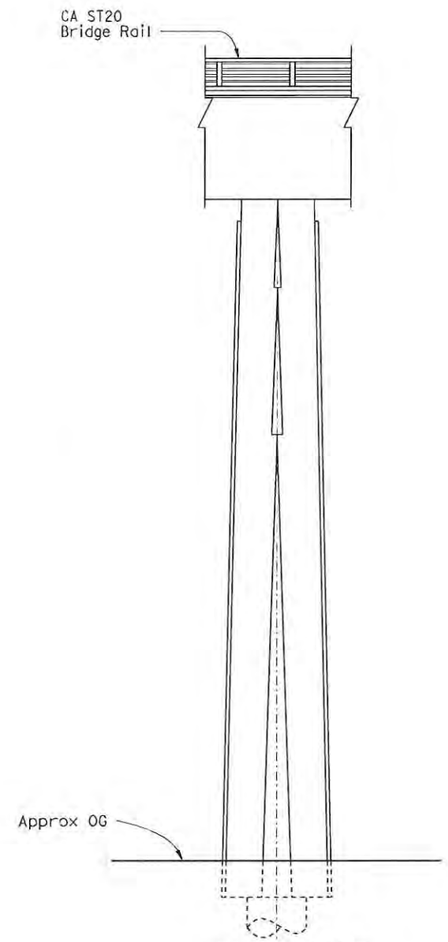

ELEVATION

1" = 20'

Design Assumptions:

1. Hydraulic information was based on "Preliminary Hydraulic Report (PHR) for Salmon Creak (Br. No. 10-0134)" memo dated Nov. 24, 2008.
   - High Tide elevation is assumed to be 9.0' based of the 1949 bridge As-Builts.
   - Q50 and Q100 water surface elevations (WSE) are 8.4' and 9.2', respectively. The WSEs were based on provided contour & not measured channel cross-section. Q50 and Q100 WSEs calculated from measured channel cross-section will be required for the final design of the replacement bridge.
2. Foundation Information was based on the " Structure Preliminary Geotechnical Report" memo dated Dec. 11, 2008.
   - Assumed foundation types: Abutments - driven steel "H" piles. Piers - 8' to 10' diameter CIDH shafts founded in bedrock.
   - A settlement period may be required for new approach embankments.
3. Deck drainage discharge shall be at least 20' from the limits of the creek at high tide.
4. The listed assumed environmental restrictions were taken from the (nearby) Noyo River Bridge (replacement) project (EA 01-378004).
   - Work in Salmon Creek from June 1st to October 15th only due to fish spawning.
5. Limits of removal:
   - Abutment 1 and Autment 6 remove existing structure to 3 feet below finish grade.
   - Piers 2, 3, 4, and 5 remove to bottom of footing. All piles to stay in place.
6. Cast-in-place construction supported on falsework. Maximum falsework heigh will be approximately 130 feet at Salmon Creek. A wooden trestle will be build accross Salmon Creek to support falsework.
7. Stage 2 traffic on bridge will be two way traffic in one lane controlled by signal lights provided by District.

Notes:

—··— Indicates existing

▨ Indicates limits of removal

DESIGNED BY David Soon	DATE 03-11-09	STRUCTURE DESIGN BRANCH 7	ALTERNATIVE 3A
DRAWN BY Y. Feng/G. Dickerson	DATE 03-11-09		PLANNING STUDY 2 OF 2
CHECKED BY X	DATE X		SALMON CREEK BRIDGE (REPLACE)
APPROVED David Soon	DATE 05-18-09		BRIDGE NO. 10-0134 / CU 01
			SCALE: As noted / EA 40140k

STRUCTURES DESIGN ADVANCE PLANNING STUDY SHEET (ENGLISH) (REV. 10/25/05)

FILE => 01-40140k_3a_gp2.dgn

USERNAME => s136697 DATE PLOTTED => 19-MAY-2009 TIME PLOTTED => 09:13

STATE OF CALIFORNIA - DEPARTMENT OF TRANSPORTATION - DIVISION OF STRUCTURES

DIST.	COUNTY	ROUTE	POST MILE
01	Men	1	

To get to the Caltrans web site, go to: http://www.dot.ca.gov

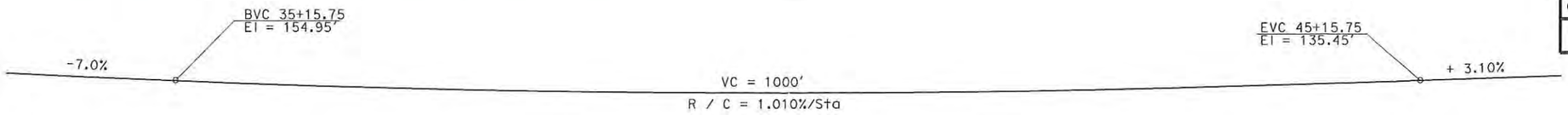

PROFILE GRADE

NO SCALE

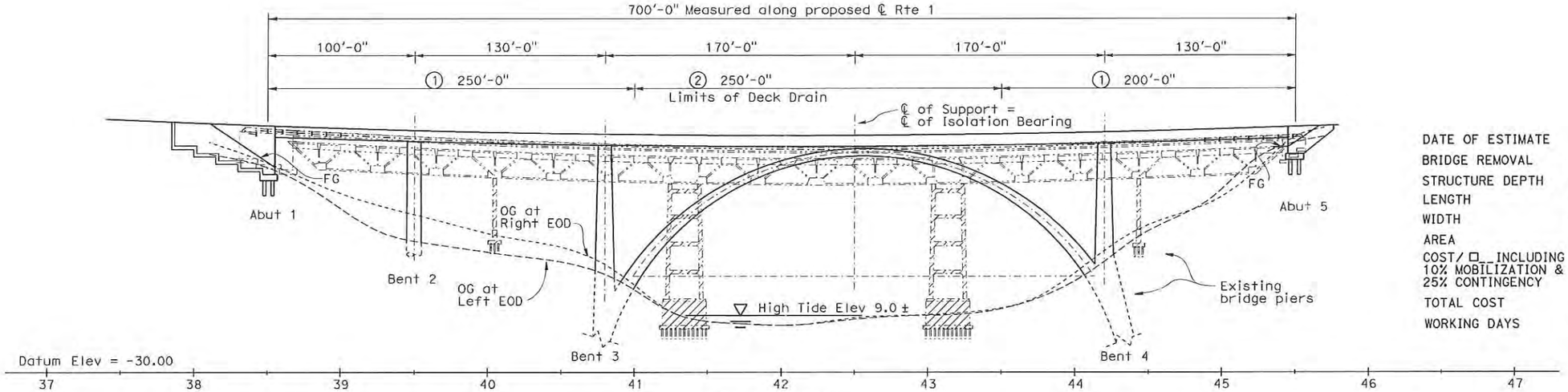

ELEVATION

1" = 80'

DATE OF ESTIMATE	5-12-2009
BRIDGE REMOVAL	= $822,000
STRUCTURE DEPTH	= 7'-0"
LENGTH	= 700'-0"
WIDTH	= 49.67'
AREA	= 34,769 SQFT
COST/ □_ INCLUDING 10% MOBILIZATION & 25% CONTINGENCY	= $828.80
TOTAL COST	= $29,639,000
WORKING DAYS	= 450

Notes :

① Limits pf Scuppers in barriers.
② Structure Approach Type N (30s)
③ MBGR, see Road Plans
④ Crash Cushion, see Road Plans.
□ Indicates Deck Drain Type D-3
—··— Indicates existing
▨ Indicates limits of removal

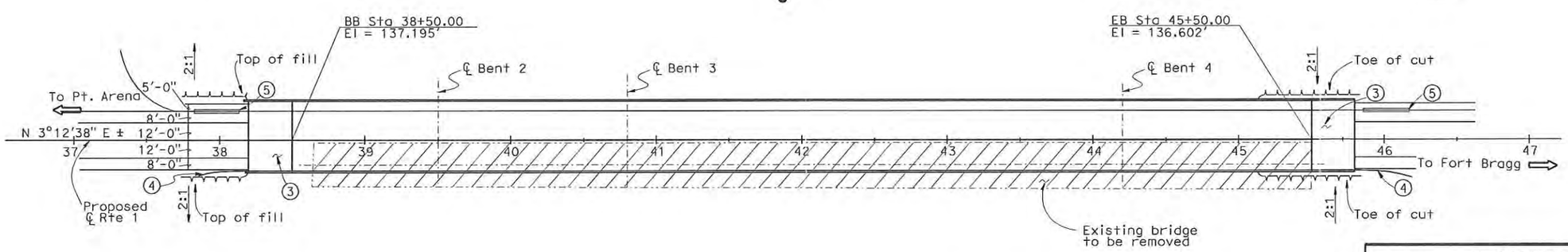

PLAN

1" = 80'

DESIGNED BY Wendy Hou	DATE 03-04-09	STRUCTURE DESIGN BRANCH 7	ALTERNATIVE 3B
DRAWN BY Y Feng/G Dickerson	DATE 05-14-09		PLANNING STUDY 1 OF 2
CHECKED BY X	DATE X		SALMON CREEK BRIDGE (REPLACE)
APPROVED David Soon	DATE 05-18-09		BRIDGE NO. 10-0134 CU 01 / SCALE: As noted EA 40140k

USERNAME => s136697 DATE PLOTTED => 19-MAY-2009 TIME PLOTTED => 09:14

STRUCTURES DESIGN ADVANCE PLANNING STUDY SHEET (ENGLISH) (REV. 10/25/05)

FILE => 01-40140k_3b_gp1.dgn

STATE OF CALIFORNIA - DEPARTMENT OF TRANSPORTATION - DIVISION OF STRUCTURES

DIST.	COUNTY	ROUTE	POST MILE
01	Men	1	

To get to the Caltrans web site, go to: http://www.dot.ca.gov

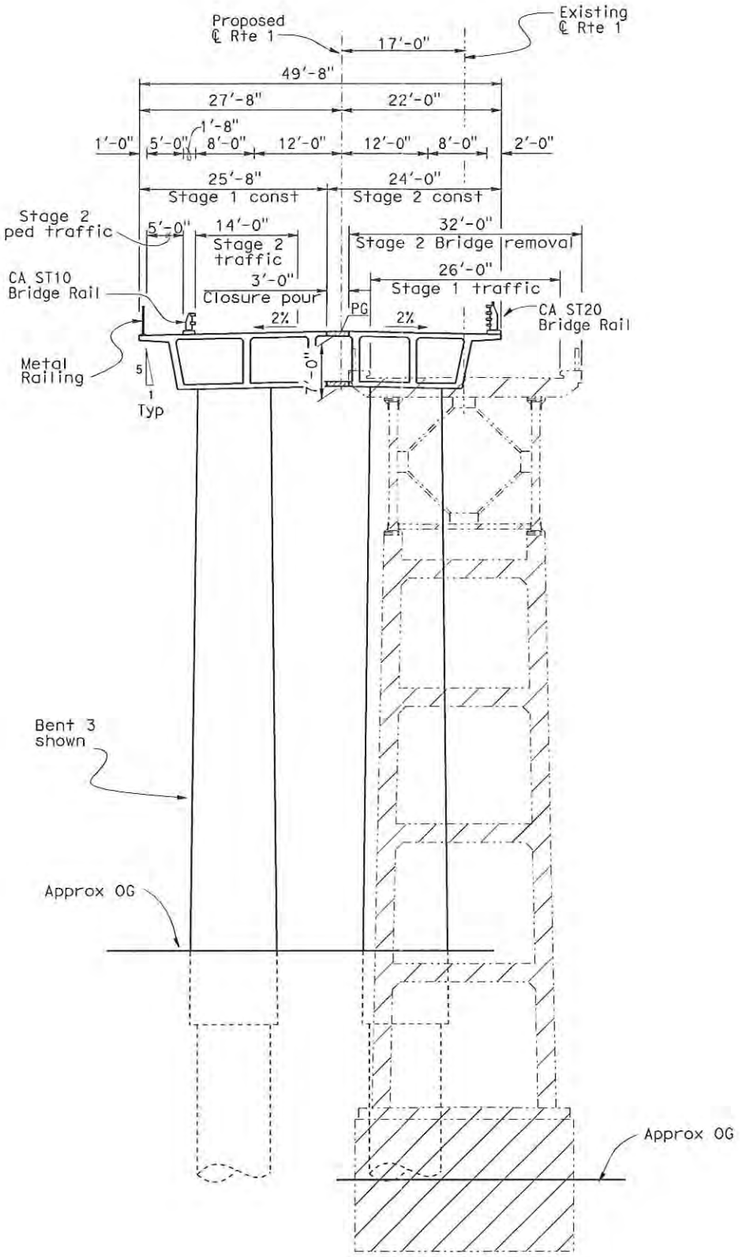

TYPICAL SECTION A

1" = 20'

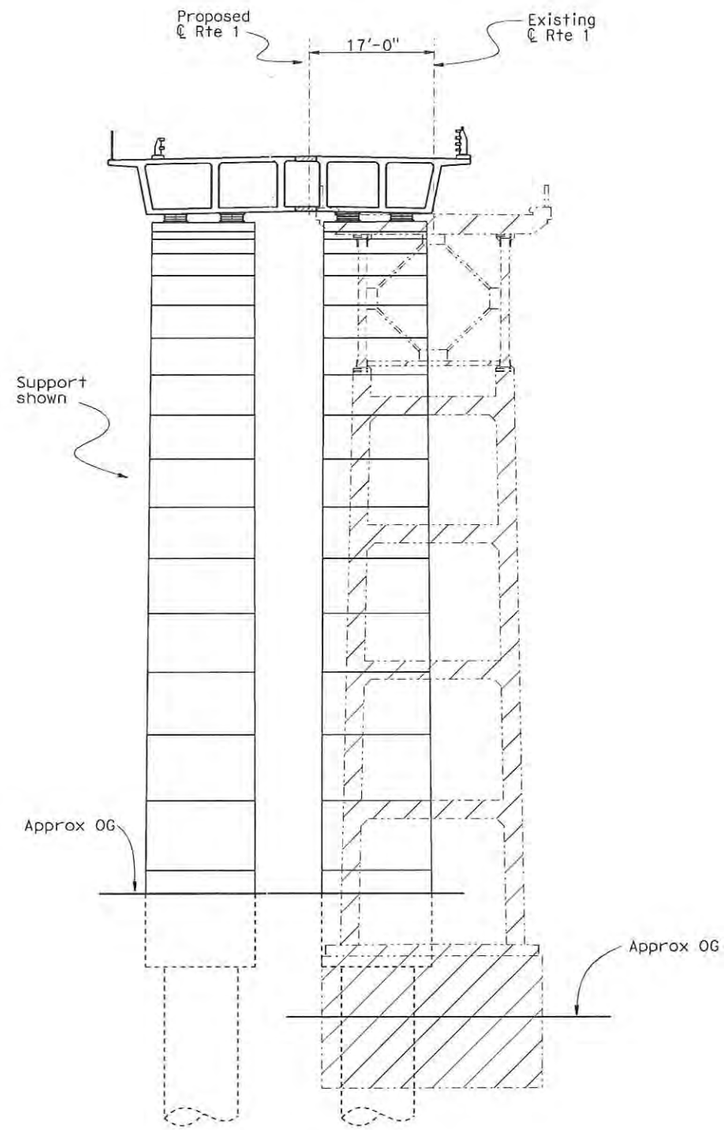

TYPICAL SECTION B

1" = 20'

Design Assumptions:

1. Hydraulic information was based on "Preliminary Hydraulic Report (PHR) for Salmon Creek (Br. No. 10-0134)" memo dated Nov. 24, 2008.
   - High Tide elevation is assumed to be 9.0' based of the 1949 bridge As-Builts.
   - Q50 and Q100 water surface elevations (WSE) are 8.4' and 9.2', respectively. The WSEs were based on provided contour & not measured channel cross-section. Q50 and Q100 WSEs calculated from measured channel cross-section will be required for the final design of the replacement bridge.
2. Foundation Information was based on the " Structure Preliminary Geotechnical Report" memo dated Dec. 11, 2008.
   - Assumed foundation types:
     Abutments - driven steel "H" piles.
     Piers - 8' to 10' diameter CIDH shafts founded in bedrock.
   - A settlement period may be required for new approach embankments.
3. Deck drainage discharge shall be at least 20' from the limits of the creek at high tide.
4. The listed assumed environmental restrictions were taken from the (nearby) Noyo River Bridge (replacement) project (EA 01-378004).
   - Work in Salmon Creek from June 1st to October 15th only, due to fish spawning.
5. Limits of removal:
   - Abutment 1 and Autment 6 remove existing structure to 3 feet below finish grade.
   - Pier 2,3,4, and 5 remove to bottom of footing. All piles to stay in place.
6. Cast-in-place construction supported on falsework. Maximum falsework heigh will be approximately 130 feet at Salmon Creek. A wooden trestle will be build accross Salmon Creek to support falsework.

Notes:

—·—· Indicates existing

▨ Indicates limits of removal

DESIGNED BY Wendy Hou	DATE 03-05-09	STRUCTURE DESIGN BRANCH 7	ALTERNATIVE 3B
DRAWN BY Yingjue Feng	DATE 03-05-09		PLANNING STUDY 2 OF 2
CHECKED BY X	DATE X		SALMON CREEK BRIDGE (REPLACE)
APPROVED David Soon	DATE 05-18-09		BRIDGE NO. 10-0134 / CU 01
			SCALE: As noted / EA 40140K

USERNAME => s136697 DATE PLOTTED => 19-MAY-2009 TIME PLOTTED => 09:14

STRUCTURES DESIGN ADVANCE PLANNING STUDY SHEET (ENGLISH) (REV. 10/25/05)

FILE => 01-40140k_3b_gp2.dgn

STATE OF CALIFORNIA - DEPARTMENT OF TRANSPORTATION - DIVISION OF STRUCTURES

DIST.	COUNTY	ROUTE	POST MILE
01	Men	1	

To get to the Caltrans web site, go to: http://www.dot.ca.gov

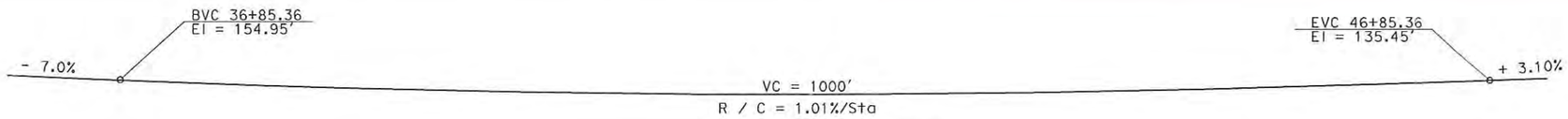

PROFILE GRADE

NO SCALE

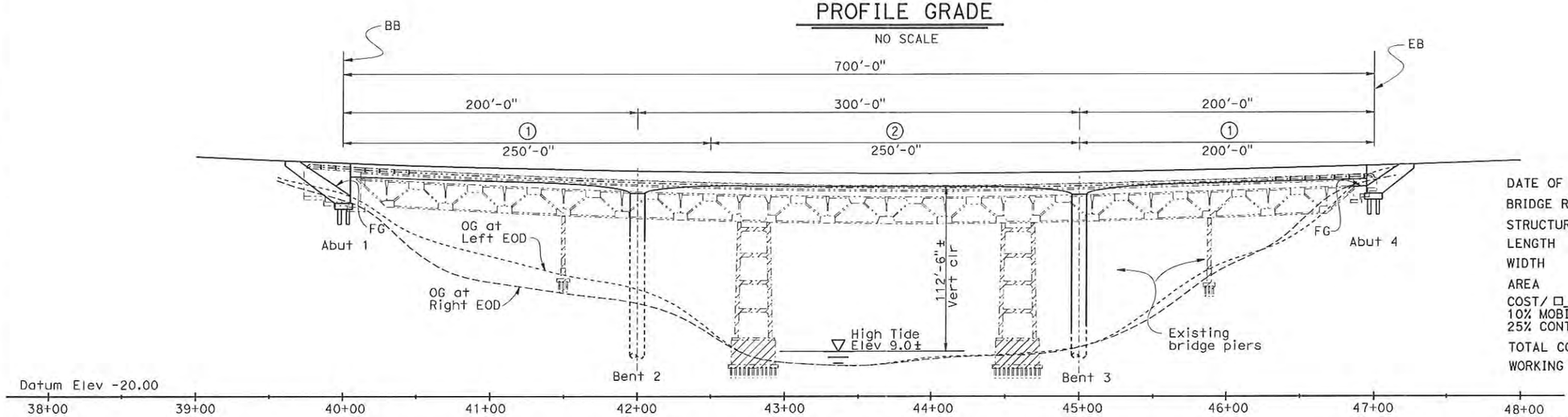

ELEVATION

1" = 80'

DATE OF ESTIMATE	4-30-2009
BRIDGE REMOVAL	= $822,000
STRUCTURE DEPTH	= 9'-0" to 15'-0"
LENGTH	= 700'-0"
WIDTH	= 49'-8"
AREA	= 34,769 SQFT
COST/ □ INCLUDING 10% MOBILIZATION & 25% CONTINGENCY	= $674.78
TOTAL COST	= $24,284,000
WORKING DAYS	= 450

Notes:

① Limits of scuppers in barriers.

② Limits of Deck Drain Type D-3. Drain pipe to discharge at bottom of Bent 3.

③ Structure Approach Type N (30S)

④ MBGR, see Road Plans

⑤ Crash Cushion, see Road Plans.

—··— Indicates existing

▨ Indicates limits of removal

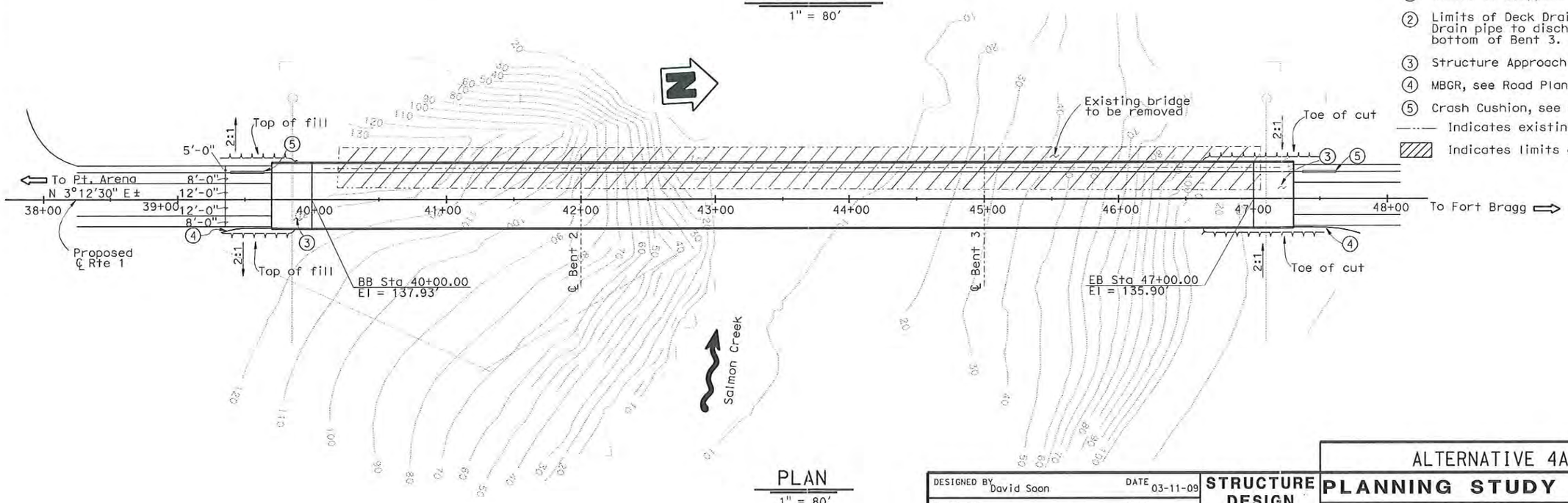

PLAN

1" = 80'

DESIGNED BY David Soon	DATE 03-11-09	STRUCTURE DESIGN BRANCH 7	ALTERNATIVE 4A
DRAWN BY Y. Feng/G. Dickerson	DATE 03-26-09		PLANNING STUDY 1 OF 2
CHECKED BY X	DATE X		SALMON CREEK BRIDGE (REPLACE)
APPROVED David Soon	DATE 05-18-09		BRIDGE NO. 10-0134 / CU 01
			SCALE: As noted / EA 40140k

FILE => 01-40140k_4a_gp1.dgn

STRUCTURES DESIGN ADVANCE PLANNING STUDY SHEET (ENGLISH) (REV. 10/25/05)

USERNAME => s136697 DATE PLOTTED => 19-MAY-2009 TIME PLOTTED => 09:14

STATE OF CALIFORNIA - DEPARTMENT OF TRANSPORTATION - DIVISION OF STRUCTURES

DIST	COUNTY	ROUTE	POST MILE
01	Men	1	

To get to the Caltrans web site, go to: http://www.dot.ca.gov

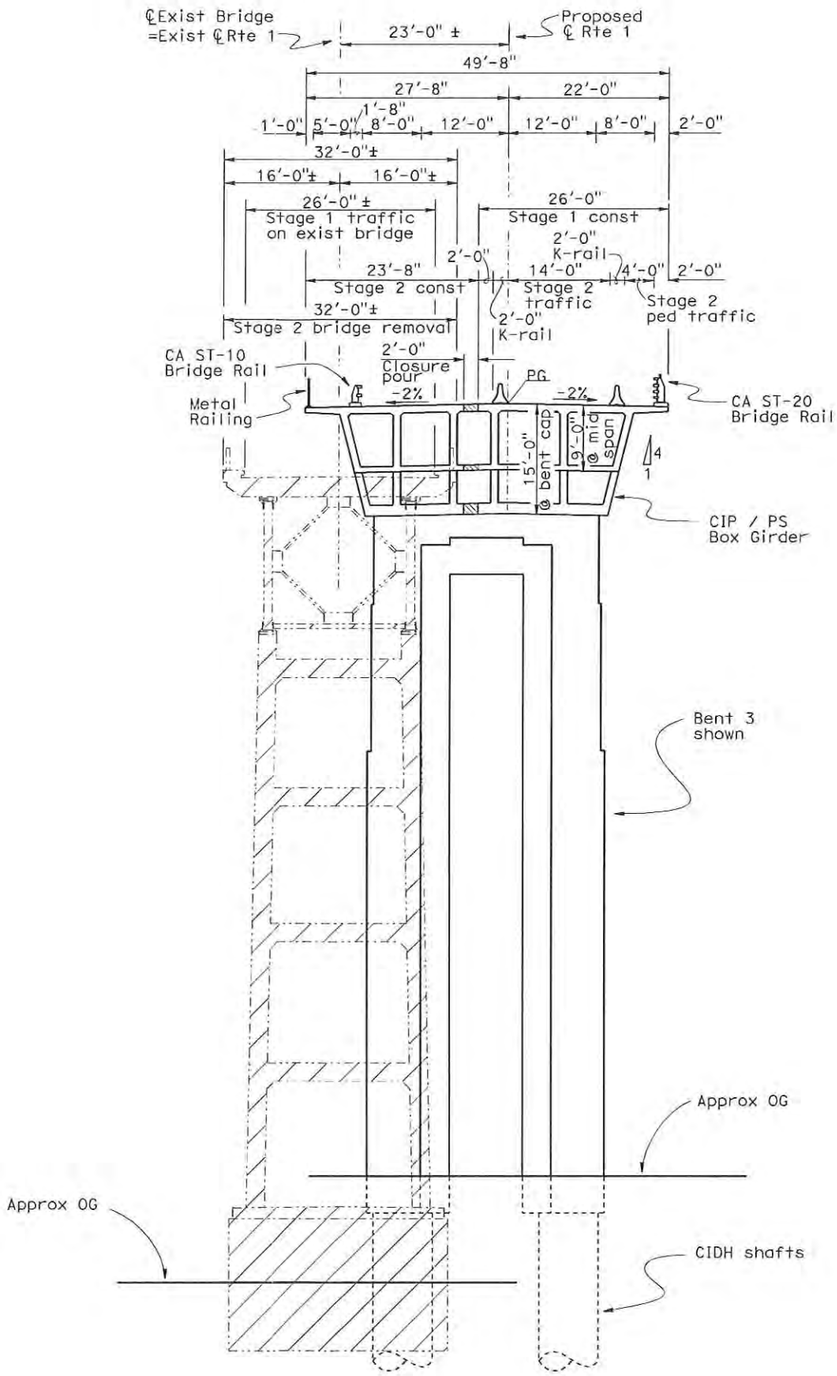

TYPICAL SECTION

1" = 20'

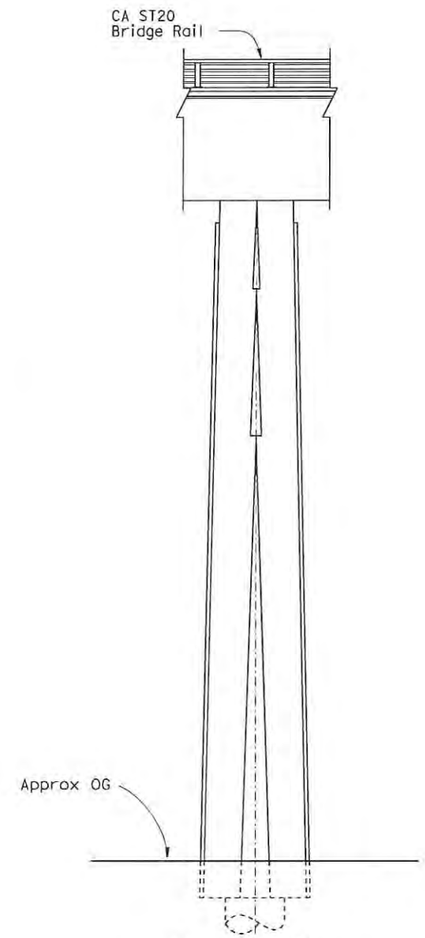

ELEVATION

1" = 20'

Design Assumptions:

1. Hydraulic information was based on "Preliminary Hydraulic Report (PHR) for Salmon Creek (Br. No. 10-0134)" memo dated Nov. 24, 2008.
   - High Tide elevation is assumed to be 9.0' based of the 1949 bridge As-Builts.
   - Q50 and Q100 water surface elevations (WSE) are 8.4' and 9.2', respectively. The WSEs were based on provided contour & not measured channel cross-section. Q50 and Q100 WSEs calculated from measured channel cross-section will be required for the final design of the replacement bridge.
2. Foundation Information was based on the " Structure Preliminary Geotechnical Report" memo dated Dec. 11, 2008.
   - Assumed foundation types: Abutments - driven steel "H" piles. Piers - 8' to 10' diameter CIDH shafts founded in bedrock.
   - A settlement period may be required for new approach embankments.
3. Deck drainage discharge shall be at least 20' from the limits of the creek at high tide.
4. The listed assumed environmental restrictions were taken from the (nearby) Noyo River Bridge (replacement) project (EA 01-378004).
   - Work in Salmon Creek from June 1st to October 15th only, due to fish spawning.
5. Limits of removal:
   - Abutment 1 and Autment 6 remove existing structure to 3 feet below finish grade.
   - Piers 2, 3, 4, and 5 remove to bottom of footing. All piles to stay in place.
6. Cast-in-place construction supported on falsework. Maximum falsework heigh will be approximately 130 feet at Salmon Creek. A wooden trestle will be build accross Salmon Creek to support falsework.
7. Stage 2 traffic on bridge will be two way traffic in one lane controlled by signal lights provided by District.
8. Telephone lines and power line are present on the east side of the existing structure. These utilities may require relocation.

Notes:

—··— Indicates existing

▨ Indicates limits of removal

DESIGNED BY David Soon	DATE 03-11-09	STRUCTURE DESIGN BRANCH 7	ALTERNATIVE 4A
DRAWN BY Y. Feng/G. Dickerson	DATE 03-11-09		PLANNING STUDY 2 OF 2
CHECKED BY X	DATE X		SALMON CREEK BRIDGE (REPLACE)
APPROVED David Soon	DATE 05-18-09		BRIDGE NO. 10-0134 / CU 01
			SCALE: As noted / EA 40140k

USERNAME => s136697 DATE PLOTTED => 19-MAY-2009 TIME PLOTTED => 09:14

STRUCTURES DESIGN ADVANCE PLANNING STUDY SHEET (ENGLISH) (REV. 10/25/05)

FILE => 01-40140k_4a_gp2.dgn

STATE OF CALIFORNIA - DEPARTMENT OF TRANSPORTATION - DIVISION OF STRUCTURES

DIST.	COUNTY	ROUTE	POST MILE
01	Men	1	

To get to the Caltrans web site, go to: http://www.dot.ca.gov

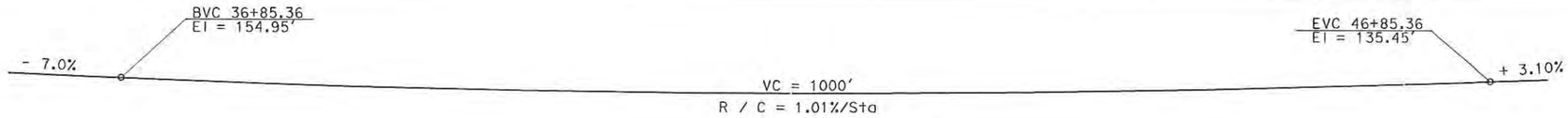

PROFILE GRADE

NO SCALE

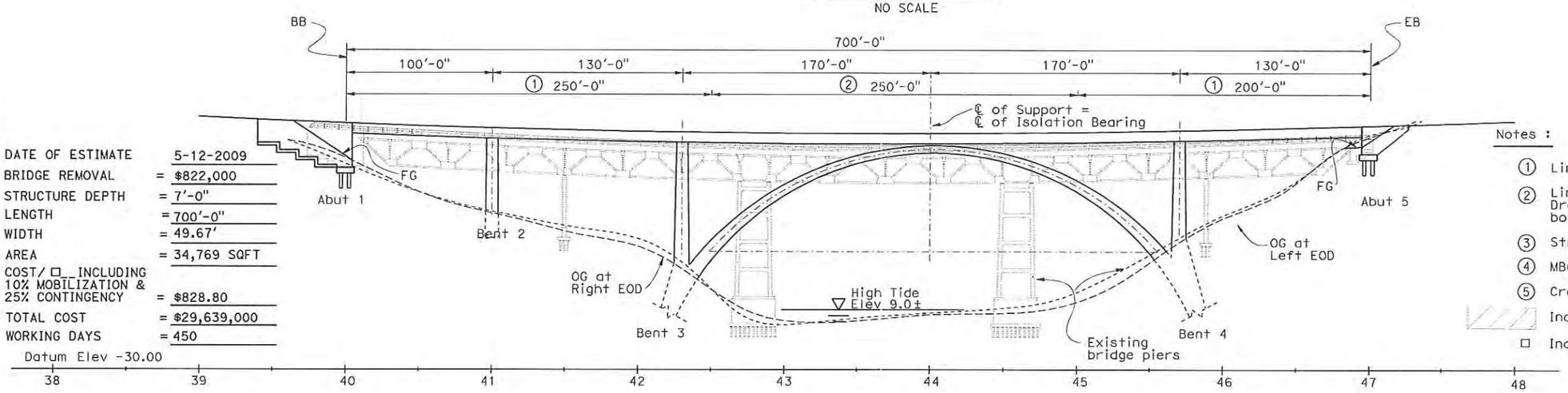

DATE OF ESTIMATE	5-12-2009
BRIDGE REMOVAL	= $822,000
STRUCTURE DEPTH	= 7'-0"
LENGTH	= 700'-0"
WIDTH	= 49.67'
AREA	= 34,769 SQFT
COST/ □ INCLUDING 10% MOBILIZATION & 25% CONTINGENCY	= $828.80
TOTAL COST	= $29,639,000
WORKING DAYS	= 450

Datum Elev -30.00

Notes :

1. Limits of scuppers in barriers.
2. Limits of Deck Drain Type D-3. Drain pipe to discharge at bottom of Bent 3.
3. Structure Approach Type N (30S)
4. MBGR, see Road Plans
5. Crash Cushion, see Road Plans.

Indicates bridge removal

□ Indicates Deck Drain Type D-3

ELEVATION

1" = 80'

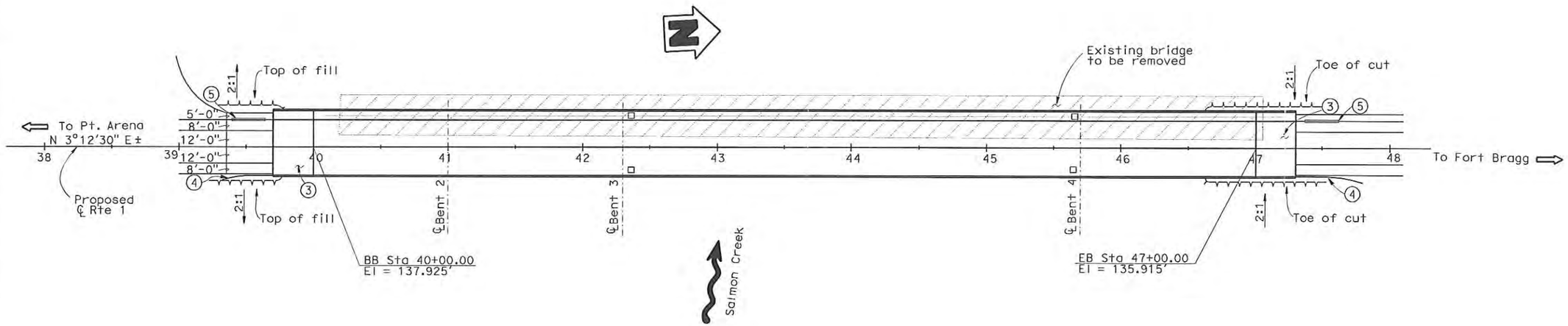

PLAN

1" = 80'

DESIGNED BY Wendy Hou	DATE 03-09-09	STRUCTURE DESIGN BRANCH 7	ALTERNATIVE 4B
DRAWN BY Y. Feng/G. Dickerson	DATE 05-16-09		PLANNING STUDY 1 OF 2
CHECKED BY X	DATE X		SALMON CREEK BRIDGE (REPLACE)
APPROVED David Soon	DATE 05-18-09		BRIDGE NO. 10-0134 / CU 01
			SCALE: As noted / EA 40140k

USERNAME => s136697 DATE PLOTTED => 19-MAY-2009 TIME PLOTTED => 09:14

STRUCTURES DESIGN ADVANCE PLANNING STUDY SHEET (ENGLISH) (REV. 10/25/05)

FILE => 01-40140k_4b_gp1.dgn

STATE OF CALIFORNIA - DEPARTMENT OF TRANSPORTATION - DIVISION OF STRUCTURES

DIST.	COUNTY	ROUTE	POST MILE
01	Men	1	

To get to the Caltrans web site, go to: http://www.dot.ca.gov

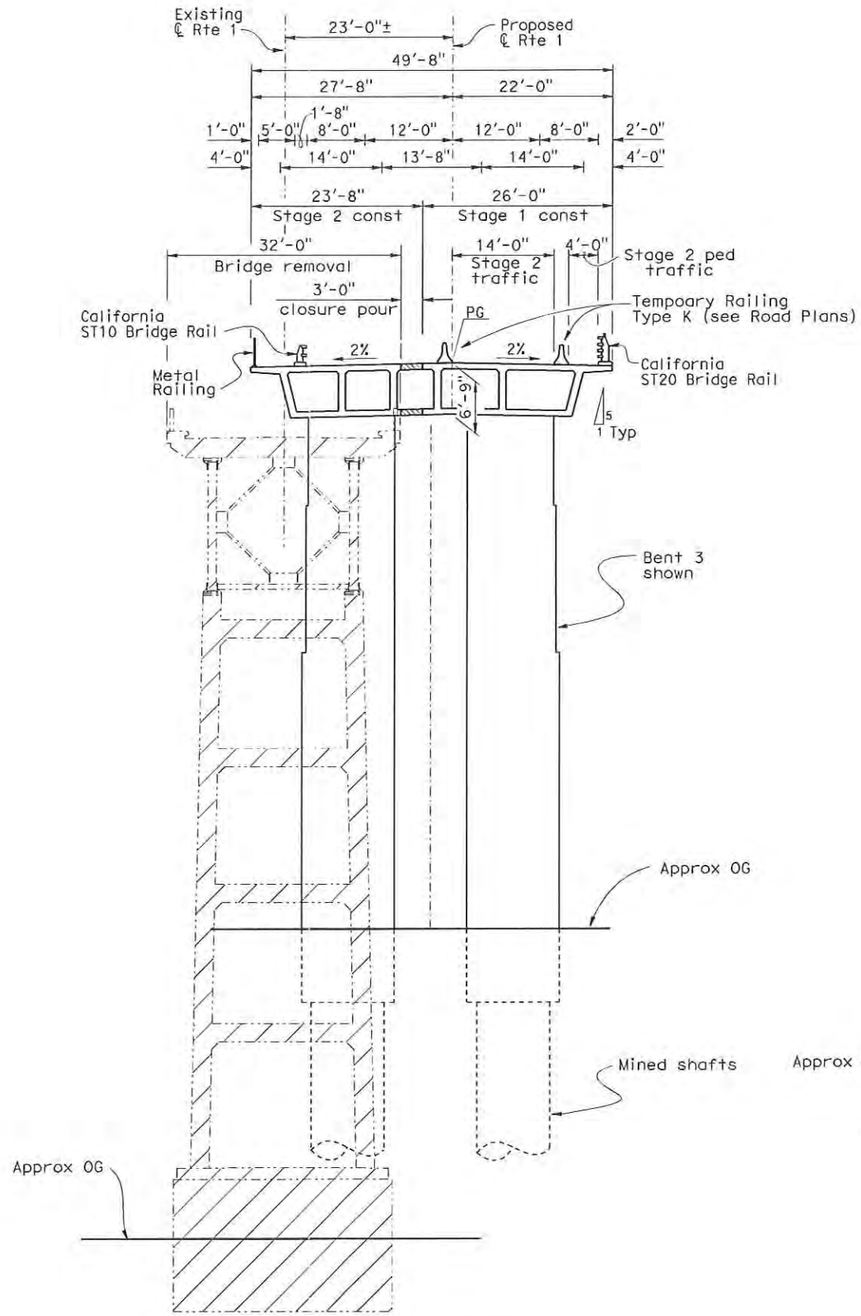

TYPICAL SECTION A

1" = 20'

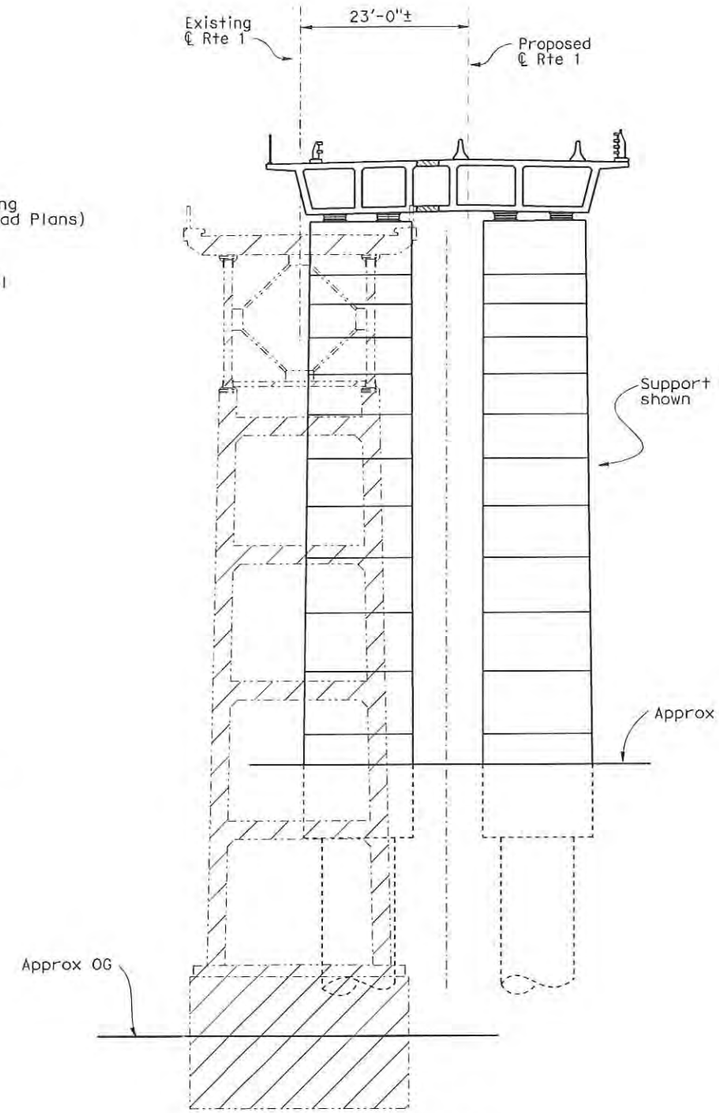

TYPICAL SECTION B

1" = 20'

Design Assumptions:

1. Hydraulic information was based on "Preliminary Hydraulic Report (PHR) for Salmon Creak (Br. No. 10-0134)" memo dated Nov. 24, 2008.
   - High Tide elevation is assumed to be 9.0' based of the 1949 bridge As-Builts.
   - Q50 and Q100 water surface elevations (WSE) are 8.4' and 9.2', respectively. The WSEs were based on provided contour & not measured channel cross-section. Q50 and Q100 WSEs calculated from measured channel cross-section will be required for the final design of the replacement bridge.
2. Foundation Information was based on the " Structure Preliminary Geotechnical Report" memo dated Dec. 11, 2008.
   - Assumed foundation types: Abutments - driven steel "H" piles. Piers - 8' to 10' diameter CIDH shafts founded in bedrock.
   - A settlement period may be required for new approach embankments.
3. Deck drainage discharge shall be at least 20' from the limits of the creek at high tide.
4. The listed assumed environmental restrictions were taken from the (nearby) Noyo River Bridge (replacement) project (EA 01-378004).
   - Work in Salmon Creek from June 1st to October 15th only, due to fish spawning.
5. Limits of removal:
   - Abutment 1 and Autment 6 remove existing structure to 3 feet below finish grade.
   - Pier 2,3,4, and 5 remove to bottom of footing. All piles to stay in place.
6. Cast-in-place construction supported on falsework. Maximum falsework heigh will be approximately 130 feet at Salmon Creek. A wooden trestle will be build accross Salmon Creek to support falsework.
7. Telephone lines and power line are present on the east side of the existing structure. These utilities may require relocation.

Notes:

Indicates existing

Indicates limits of removal

Indicates closure pour

DESIGNED BY Wendy Hou	DATE 3-11-09	STRUCTURE DESIGN BRANCH 7	ALTERNATIVE 4B
DRAWN BY Yingjue Feng	DATE 3-11-09		PLANNING STUDY 2 OF 2
CHECKED BY X	DATE X		SALMON CREEK BRIDGE (REPLACE)
APPROVED David Soon	DATE 05-18-09		BRIDGE NO. 10-0134 / CU 01
			SCALE: As noted / EA 40140K

STRUCTURES DESIGN ADVANCE PLANNING STUDY SHEET (ENGLISH) (REV. 10/25/05)

FILE => 01-40140k_4b_gp2.dgn

USERNAME => s736697 DATE PLOTTED => 19-MAY-2009 TIME PLOTTED => 09:14

ATTACHMENT E

COST ESTIMATE

Project Study Report-Cost Estimate

01-MEN-01

PM 42.4/43.3

EA 01-40140K

HA21 PROGRAM / 20.10.201.110

SALMON CREEK BRIDGE REPLACEMENT PROJECT

ALTERNATIVE 1:
WEST-SIDE REPLACEMENT BRIDGE CONSTRUCTED CLEAR OF EXISTING SALMON CREEK BRIDGE

PROJECT DESCRIPTION:

LIMITS: The Salmon Creek Bridge is located on State Route 1 in Mendocino County, from PM 43.00 to PM 43.13, near Albion, 2.7 miles north of the Route 128 junction. Limits of work are between PM 42.4 and 43.3.

PROPOSED IMPROVEMENT (SCOPE): Project proposes to replace the Salmon Creek Bridge (#10-0134) west of the existing structure. Also included in this project is realignment, shouldering widening, culvert replacement, and drainage work.

SUMMARY OF ESTIMATED COST (2009)

	1A	1B	1C	1D
TOTAL ROADWAY ITEMS	$13,755,000	$13,755,000	$13,755,000	$13,755,000
TOTAL STRUCTURE ITEMS	$25,298,000	$30,482,000	$28,647,000	$25,460,000
SUBTOTAL CONSTRUCTION COSTS	$39,053,000	$44,237,000	$42,402,000	$39,215,000
TOTAL RIGHT OF WAY ITEMS	$3,218,000	$3,218,000	$3,218,000	$3,218,000
TOTAL PROJECT CAPITAL OUTLAY COSTS	$42,271,000	$47,455,000	$45,620,000	$42,433,000
CALL	**$42,300,000**	**$47,500,000**	**$45,700,000**	**$42,500,000**

Reviewed by District Program Manager _____ Date _____

Approved by Project Manager _____ Date _____

I. ROADWAY ITEMS

Section 1 Earthwork	Quantity	Unit	Unit Price	Item Cost
Clearing & Grubbing	1	LS	$500,000	$500,000
Roadway Excavation	132,504	CY	$25	$3,312,590
			Subtotal Earthwork	**$3,812,590**

Section 2 Pavement Structural Section	Quantity	Unit	Unit Price	Item Cost
Hot Mix Asphalt - Type A	4,400	TON	$85	$374,000
OGFC	1,500	TON	$105	$157,500
Aggregate Base (Class 2)	8,000	CY	$50	$400,000
Pavement Reinforcing Fabric	3,600	SQYD	$2	$7,200
Cold Plane AC	1,000	SQYD	$4	$4,000
Obiterate Surfacing	10,200	SQYD	$10	$102,000
			Subtotal Pavement Structural Section	**$1,044,700**

Section 3 Drainage	Quantity	Unit	Unit Price	Item Cost
Install / Modify / Replace Culvert	7	EA	$45,000	$315,000
			Subtotal Drainage	**$315,000**

Section 4 Specialty Items	Quantity	Unit	Unit Price	Item Cost
Progress Schedule (Critical Path)	1	LS	$10,000	$10,000
Erosion Control and Highway Planting	1	LS	$390,000	$390,000
Prepare Storm Water Pollution Prevention Plan	1	LS	$10,000	$10,000
Construction Site BMP Items	1	LS	$1,183,000	$1,183,000
Retaining Wall (Type 1)	2	LS	$1,020,000	$1,020,000
Transition Railing (Type WB)	4	EA	$5,000	$20,000
Terminal Section (Type C)	4	EA	$250	$1,000
Construction Access	3	LS	$199,000	$199,000
Incentive for Asphalt Concrete (QC/QA) (4% of HMAC)	1	LS	$14,960	$14,960
			Subtotal Specialty Items	**$2,847,960**

Section 5 Traffic Items	Quantity	Unit	Unit Price	Item Cost
Thermoplastic Striping (4")	28,934	FT	$1.40	$40,508
Pavement Marker (Retroreflective)	343	EA	$10.00	$3,432
Portable Changeable Message Sign (PCMS)	2	EA	$6,500	$13,000
Relocate Roadside Sign	1	LS	$20,000	$20,000
Remove Roadside Sign	1	LS	$15,000	$15,000
Install Roadside Sign	1	LS	$20,000	$20,000
Construction Area Signs	1	LS	$50,000	$50,000
			Subtotal Traffic Items	**$161,940**

Traffic Additions (Added in "TOTAL SECTIONS 1 thru 5)				
Traffic Control System	1	LS	(6% Item Subtotal)	$491,000
Maintain Traffic	1	LS	(7% Item Subtotal)	$572,800
			SUBTOTAL	**$8,182,190**
			TOTAL SECTIONS 1 thru 5	**$9,245,990**

Section 6 Minor Items		
	$9,245,990 x (5%) =	$462,299
	(Subtotal Sections 1 thru 5)	$9,245,990
	TOTAL MINOR ITEMS	**$462,299**

Section 7 Roadway Mobilization		
	$9,708,289 x (10%) =	$970,829
	(Subtotal Sections 1 thru 6)	$9,708,289
	TOTAL ROADWAY MOBILIZATION	**$970,829**

Section 8 Roadway Additions	Quantity	Unit	Unit Price	Item Cost
Supplemental Work		$9,708,289 x (5%) =		$485,414
		(Subtotal Sections 1 thru 6)		$9,708,289
Contingencies		$9,708,289 x (25%) =		$2,427,072
		(Subtotal Sections 1 thru 6)		$9,708,289
	$ Per Hour	Hours Per Day	Work Days	
COZEEP setups @ $100 per Hour Working 10 Hour Days *Estimated at 30% of total Structure workingdays	$100	10	84	$84,000
Construction Office		RE Office ($2200/month for 36 months)		$79,200
		(Subtotal Sections 1 thru 6)		$9,708,289
		TOTAL ROADWAY ADDITIONS (Sections 7 & 8)		**$4,046,516**
		TOTAL ROADWAY ITEMS		**$13,755,000**

II. STRUCTURES ITEMS

Existing Structure:				
Existing Bridge Name	Salmon Creek Bridge (#10-0134) Replacement			
Existing Structure Type	(309/302) Steel Deck Truss/Steel Beam Spans			
Replacement Structure:	1A	1B	1C	1D
Width (out to out) - (ft)	49.7	49.7	49.7	49.7
Length (begin to end bridge) - (ft)	800	800	770	800
Total Area - (SF)	39,733	39,733	38,243	39,733
Footing Type (pile/spread)	TBD	TBD	TBD	TBD
Demolition (calculated at ** per SF)	$822,000.00	$822,000	$822,000	$822,000
Construction Cost per SF (preliminary)	$616	$746	$728	$620
Total Structure Cost =	$24,476,000	$29,660,000	$27,825,000	$24,638,000
SUBTOTAL STRUCTURES ITEMS (Sum of Total Cost for Structures)	**$25,298,000**	**$30,482,000**	**$28,647,000**	**$25,460,000**

Railroad Related Costs:	NA		
		SUBTOTAL RAILROAD ITEMS	**$0**

TOTAL STRUCTURES ITEMS	**$25,298,000**	**$30,482,000**	**$28,647,000**	**$25,460,000**

III. RIGHT OF WAY ITEMS

A. Acquisition, including excess lands,	$1,227,926
B. Mitigation acquisition & credits	$1,980,000
C. Project Development Permit Fees	$9,000
D. Utility Relocation (State share)	$0
E. Relocation Assistance (RAP)	$0
F. Clearance/Demolition	$0
G. Title and Escrow Fees	$800

TOTAL RIGHT OF WAY ITEMS	**$3,218,000**

H. Construction Contract Work Brief Description of Work: West-side bridge replacement, realignment, shouldering widening, culvert replacement, and drainage work	
Right of Way Branch Cost Estimate for Work	$0

Anticipated Date of Right of Way Certification N/A
(Date to which Values are Escalated)

Estimate Prepared By: Johnathon Jackson Phone # 707-441-2059

Project Study Report-Cost Estimate

01-MEN-01

PM 42.4/43.3

EA 01-40140K

HA21 PROGRAM / 20.10.201.110

SALMON CREEK BRIDGE REPLACEMENT PROJECT

ALTERNATIVE 2:
EAST-SIDE REPLACEMENT BRIDGE CONSTRUCTED CLEAR OF EXISTING SALMON CREEK BRIDGE

PROJECT DESCRIPTION:

LIMITS: The Salmon Creek Bridge is located on State Route 1 in Mendocino County, from PM 43.00 to PM 43.13, near Albion, 2.7 miles north of the Route 128 junction. Limits of work are between PM 42.4 and 43.3.

PROPOSED IMPROVEMENT (SCOPE): Project proposes to replace the Salmon Creek Bridge (#10-0134) east of the existing structure. Also included in this project is realignment, shouldering widening, culvert replacement, and drainage work.

SUMMARY OF ESTIMATED COST (2009)

	2A	2B	2C	2D
TOTAL ROADWAY ITEMS	$13,791,000	$13,791,000	$13,791,000	$13,791,000
TOTAL STRUCTURE ITEMS	$19,253,000	$26,984,000	$27,075,000	$22,895,000
SUBTOTAL CONSTRUCTION COSTS	$33,044,000	$40,775,000	$40,866,000	$36,686,000
TOTAL RIGHT OF WAY ITEMS	$3,134,000	$3,134,000	$3,134,000	$3,134,000
TOTAL PROJECT CAPITAL OUTLAY COSTS	$36,178,000	$43,909,000	$44,000,000	$39,820,000
CALL	**$36,200,000**	**$44,000,000**	**$44,000,000**	**$39,900,000**

Reviewed by District Program Manager _____ Date _____

Approved by Project Manager _____ Date _____

I. ROADWAY ITEMS

Section 1 Earthwork	Quantity	Unit	Unit Price	Item Cost
Clearing & Grubbing	1	LS	$500,000	$500,000
Roadway Excavation	175,547	CY	$25	$4,388,672
			Subtotal Earthwork	**$4,888,672**

Section 2 Pavement Structural Section	Quantity	Unit	Unit Price	Item Cost
Hot Mix Asphalt - Type A	4,600	TON	$85	$391,000
OGFC	1,600	TON	$105	$168,000
Aggregate Base (Class 2)	8,300	CY	$50	$415,000
Pavement Reinforcing Fabric	3,500	SQYD	$2	$7,000
Cold Plane AC	1,000	SQYD	$4	$4,000
Obiterate Surfacing	10,100	SQYD	$10	$101,000
			Subtotal Pavement Structural Section	**$1,086,000**

Section 3 Drainage	Quantity	Unit	Unit Price	Item Cost
Install / Modify / Replace Culvert	7	EA	$45,000	$315,000
			Subtotal Drainage	**$315,000**

Section 4 Specialty Items	Quantity	Unit	Unit Price	Item Cost
Progress Schedule (Critical Path)	1	LS	$10,000	$10,000
Erosion Control and Highway Planting	1	LS	$390,000	$390,000
Prepare Storm Water Pollution Prevention Plan	1	LS	$10,000	$10,000
Construction Site BMP Items	1	LS	$1,100,000	$1,100,000
Transition Railing (Type WB)	4	EA	$5,000	$20,000
Terminal Section (Type C)	4	EA	$250	$1,000
Construction Access	3	LS	$199,000	$199,000
Incentive for Asphalt Concrete (QC/QA) (4% of HMAC)	1	LS	$22,360	$22,360
			Subtotal Specialty Items	**$1,752,360**

Section 5 Traffic Items	Quantity	Unit	Unit Price	Item Cost
Thermoplastic Striping (4")	28,934	FT	$1.40	$40,508
Pavement Marker (Retroreflective)	343	EA	$10.00	$3,432
Portable Changeable Message Sign (PCMS)	2	EA	$6,500	$13,000
Relocate Roadside Sign	1	LS	$20,000	$20,000
Remove Roadside Sign	1	LS	$15,000	$15,000
Install Roadside Sign	1	LS	$20,000	$20,000
Construction Area Signs	1	LS	$50,000	$50,000
			Subtotal Traffic Items	**$161,940**

Traffic Additions (Added in "TOTAL SECTIONS 1 thru 5)				
Traffic Control System	1	LS	(6% Item Subtotal)	$492,300
Maintain Traffic	1	LS	(7% Item Subtotal)	$574,300
			SUBTOTAL	**$8,203,972**

TOTAL SECTIONS 1 thru 5 $9,270,572

Section 6 Minor Items		
	$9,270,572 x (5%) =	$463,529
	(Subtotal Sections 1 thru 5)	$9,270,572
	TOTAL MINOR ITEMS	**$463,529**

Section 7 Roadway Mobilization		
	$9,734,101 x (10%) =	$973,410
	(Subtotal Sections 1 thru 6)	$9,734,101
	TOTAL ROADWAY MOBILIZATION	**$973,410**

Section 8 Roadway Additions	Quantity	Unit	Unit Price	Item Cost
Supplemental Work		$9,734,101 x (5%) =		$486,705
		(Subtotal Sections 1 thru 6)		$9,734,101
Contingencies		$9,734,101 x (25%) =		$2,433,525
		(Subtotal Sections 1 thru 6)		$9,734,101
	$ Per Hour	Hours Per Day	Work Days	
COZEEP setups @ $100 per Hour Working 10 Hour Days *Estimated at 30% of total Structure workingdays	$100	10	84	$84,000
Construction Office		RE Office ($2200/month for 36 months)		$79,200
		(Subtotal Sections 1 thru 6)		$9,734,101
		TOTAL ROADWAY ADDITIONS (Sections 7 & 8)		**$4,056,840**

TOTAL ROADWAY ITEMS $13,791,000

II. STRUCTURES ITEMS

Existing Structure:				
Bridge Name	Salmon Creek Bridge (#10-0134)			
Structure Type	(309/302) Steel Deck Truss/Steel Beam Spans			
Replacement Structure:	2A	2B	2C	2D
Width (out to out) - (ft)	49.7	49.7	49.7	49.7
Length (begin to end bridge) - (ft)	700.0	700.0	700.0	700.0
Total Area - (SF)	34,767	34,767	34,767	34,767
Footing Type (pile/spread)	TBD	TBD	TBD	TBD
Demolition (calculated at ** per SF)	$822,000.00	$822,000.00	$822,000.00	$822,000.00
Construction Cost per SF (preliminary)	$530	$753	$755	$635
Total Structure Cost =	$18,431,000	$26,162,000	$26,253,000	$22,073,000
SUBTOTAL STRUCTURES ITEMS (Sum of Total Cost for Structures)	**$19,253,000**	**$26,984,000**	**$27,075,000**	**$22,895,000**

Railroad Related Costs:	NA			
			SUBTOTAL RAILROAD ITEMS	**$0**

TOTAL STRUCTURES ITEMS	**$19,253,000**	**$26,984,000**	**$27,075,000**	**$22,895,000**

III. RIGHT OF WAY ITEMS

A. Acquisition, including excess lands,	$1,135,596
B. Mitigation acquisition & credits	$1,980,000
C. Project Development Permit Fees	$9,000
D. Utility Relocation (State share)	$0
E. Relocation Assistance (RAP)	$0
F. Clearance/Demolition	$0
G. Title and Escrow Fees	$9,600

TOTAL RIGHT OF WAY ITEMS $3,134,000

H. Construction Contract Work Brief Description of Work: East-side bridge replacement, realignment, shouldering widening, culvert replacement, and drainage work	
Right of Way Branch Cost Estimate for Work	$0

Anticipated Date of Right of Way Certification N/A
(Date to which Values are Escalated)

Estimate Prepared By: Johnathon Jackson Phone # 707-441-2059

Project Study Report-Cost Estimate

01-MEN-01

PM 42.4/43.3

EA 01-40140K

HA21 PROGRAM / 20.10.201.110

SALMON CREEK BRIDGE REPLACEMENT PROJECT

ALTERNATIVE 3:
WEST-SIDE REPLACEMENT BRIDGE CONSTRUCTED IN STAGES

PROJECT DESCRIPTION:

LIMITS: The Salmon Creek Bridge is located on State Route 1 in Mendocino County, from PM 43.00 to PM 43.13, near Albion, 2.7 miles north of the Route 128 junction. Limits of work are between PM 42.4 and 43.3.

PROPOSED IMPROVEMENT (SCOPE): Project proposes to replace the Salmon Creek Bridge (#10-0134) on the existing alignment. Also included in this project is realignment, shouldering widening, culvert replacement, and drainage work.

SUMMARY OF ESTIMATED COST (2009)

	3A	3B
TOTAL ROADWAY ITEMS	$14,330,000	$14,330,000
TOTAL STRUCTURE ITEMS	$24,284,000	$29,639,000
SUBTOTAL CONSTRUCTION COSTS	$38,614,000	$43,969,000
TOTAL RIGHT OF WAY ITEMS	$3,239,000	$3,239,000
TOTAL PROJECT CAPITAL OUTLAY COSTS	$41,853,000	$47,208,000
CALL	**$41,900,000**	**$47,300,000**

Reviewed by District Program Manager _____ Date _____

Approved by Project Manager _____ Date _____

I. ROADWAY ITEMS

Section 1 Earthwork	Quantity	Unit	Unit Price	Item Cost
Clearing & Grubbing	1	LS	$550,000	$550,000
Roadway Excavation	110,205	CY	$30	$3,306,162
			Subtotal Earthwork	**$3,856,162**

Section 2 Pavement Structural Section	Quantity	Unit	Unit Price	Item Cost
Hot Mix Asphalt - Type A	4,200	TON	$90	$378,000
OGFC	1,600	TON	$115	$184,000
Aggregate Base (Class 2)	7,500	CY	$55	$412,500
Pavement Reinforcing Fabric	11,700	SQYD	$3	$35,100
Cold Plane AC	1,000	SQYD	$5	$5,000
Obiterate Surfacing	5,300	SQYD	$11	$58,300
			Subtotal Pavement Structural Section	**$1,072,900**

Section 3 Drainage	Quantity	Unit	Unit Price	Item Cost
Install / Modify / Replace Culvert	7	EA	$45,000	$315,000
			Subtotal Drainage	**$315,000**

Section 4 Specialty Items	Quantity	Unit	Unit Price	Item Cost
Progress Schedule (Critical Path)	1	LS	$10,000	$10,000
Erosion Control and Highway Planting	1	LS	$390,000	$390,000
Prepare Storm Water Pollution Prevention Plan	1	LS	$10,000	$10,000
Construction Site BMP Items	1	LS	$1,155,000	$1,155,000
Retaining Walls (Type 1)	1	LS	$543,000	$543,000
Transition Railing (Type WB)	4	EA	$5,000	$20,000
Terminal Section (Type C)	4	EA	$250	$1,000
Construction Access	3	LS	$236,000	$236,000
Incentive for Asphalt Concrete (QC/QA) (4% of HMA & OGFC)	1	LS	$22,480	$22,480
			Subtotal Specialty Items	**$2,387,480**

Section 5 Traffic Items	Quantity	Unit	Unit Price	Item Cost
Thermoplastic Striping (4")	28,934	FT	$1.40	$40,508
Pavement Marker (Retroreflective)	343	EA	$10.00	$3,432
Portable Changeable Message Sign (PCMS)	2	EA	$6,500	$13,000
Relocate Roadside Sign	1	LS	$20,000	$20,000
Remove Roadside Sign	1	LS	$15,000	$15,000
Install Roadside Sign	1	LS	$20,000	$20,000
Construction Area Signs	1	LS	$50,000	$50,000
			Subtotal Traffic Items	**$161,940**

Traffic Additions (Added in "TOTAL SECTIONS 1 thru 5)				
Traffic Control System	1	LS	(10% Item Subtotal)	$779,400
Maintain Traffic	1	LS	(10% Item Subtotal)	$779,400
			SUBTOTAL	**$7,793,482**

TOTAL SECTIONS 1 thru 5 $9,352,282

Section 6 Minor Items		
	$9,352,282 x (5%) =	$467,614
	(Subtotal Sections 1 thru 5)	$9,352,282
	TOTAL MINOR ITEMS	**$467,614**

Section 7 Roadway Mobilization		
	$9,819,896 x (10%) =	$981,990
	(Subtotal Sections 1 thru 6)	$9,819,896
	TOTAL ROADWAY MOBILIZATION	**$981,990**

Section 8 Roadway Additions	Quantity	Unit	Unit Price	Item Cost
Supplemental Work		$9,819,896 x (5%) =		$490,995
		(Subtotal Sections 1 thru 6)		$9,819,896
Contingencies		$9,819,896 x (25%) =		$2,454,974
		(Subtotal Sections 1 thru 6)		$9,819,896
	$ Per Hour	Hours Per Day	Work Days	
COZEEP setups @ $100 per Hour Working 10 Hour Days *Estimated at 30% of total Structure workingdays	$100	10	450	$450,000
Construction Office		RE Office ($2200/month for 60 months)		$132,000
		(Subtotal Sections 1 thru 6)		$9,819,896

TOTAL ROADWAY ADDITIONS (Sections 7 & 8) $4,509,958

TOTAL ROADWAY ITEMS $14,330,000

II. STRUCTURES ITEMS

Existing Structure:		
Bridge Name	Salmon Creek Bridge (#10-0134)	
Structure Type	(309/302) Steel Deck Truss/Steel Beam Spans	
Replacement Structure:	3A	3B
Width (out to out) - (ft)	49.7	49.7
Length (begin to end bridge) - (ft)	700.0	700.0
Total Area - (SF)	34,767	34,767
Footing Type (pile/spread)	TBD	TBD
Demolition (calculated at ** per SF)	$822,000.00	$822,000.00
Construction Cost per SF (preliminary)	$675	$829
Total Structure Cost =	$23,462,000	$28,817,000
SUBTOTAL STRUCTURES ITEMS (Sum of Total Cost for Structures)	**$24,284,000**	**$29,639,000**

Railroad Related Costs:	NA	
	SUBTOTAL RAILROAD ITEMS	**$0**

TOTAL STRUCTURES ITEMS	**$24,284,000**	**$29,639,000**

III. RIGHT OF WAY ITEMS

A. Acquisition, including excess lands,	$1,237,136
B. Mitigation acquisition & credits	$1,980,000
C. Project Development Permit Fees	$9,000
D. Utility Relocation (State share)	$0
E. Relocation Assistance (RAP)	$0
F. Clearance/Demolition	$0
G. Title and Escrow Fees	$12,800
TOTAL RIGHT OF WAY ITEMS	**$3,239,000**

H. Construction Contract Work Brief Description of Work: West-side staged bridge replacement, realignment, shouldering widening, culvert replacement, and drainage work	
Right of Way Branch Cost Estimate for Work	$0

Anticipated Date of Right of Way Certification N/A
(Date to which Values are Escalated)

Estimate Prepared By: Johnathon Jackson Phone # 707-441-2059

Project Study Report-Cost Estimate

01-MEN-01

PM 42.4/43.3

EA 01-40140K

HA21 PROGRAM / 20.10.201.110

SALMON CREEK BRIDGE REPLACEMENT PROJECT

ALTERNATIVE 4:
EAST-SIDE REPLACEMENT BRIDGE CONSTRUCTED IN STAGES

PROJECT DESCRIPTION:

LIMITS: The Salmon Creek Bridge is located on State Route 1 in Mendocino County, from PM 43.00 to PM 43.13, near Albion, 2.7 miles north of the Route 128 junction. Limits of work are between PM 42.4 and 43.3.

PROPOSED IMPROVEMENT (SCOPE): Project proposes to replace the Salmon Creek Bridge (#10-0134) on the existing alignment. Also included in this project is realignment, shouldering widening, culvert replacement, and drainage work.

SUMMARY OF ESTIMATED COST (2009)

	4A	4B
TOTAL ROADWAY ITEMS	$14,571,000	$14,571,000
TOTAL STRUCTURE ITEMS	$24,284,000	$29,639,000
SUBTOTAL CONSTRUCTION COSTS	$38,855,000	$44,210,000
TOTAL RIGHT OF WAY ITEMS	$2,969,000	$2,969,000
TOTAL PROJECT CAPITAL OUTLAY COSTS	$41,824,000	$47,179,000
CALL	**$41,900,000**	**$47,200,000**

Reviewed by District Program Manager _____ Date _____

Approved by Project Manager _____ Date _____

I. ROADWAY ITEMS

Section 1 Earthwork	Quantity	Unit	Unit Price	Item Cost
Clearing & Grubbing	1	LS	$550,000	$550,000
Roadway Excavation	131,802	CY	$30	$3,954,048
			Subtotal Earthwork	**$4,504,048**

Section 2 Pavement Structural Section	Quantity	Unit	Unit Price	Item Cost
Hot Mix Asphalt - Type A	4,500	TON	$90	$405,000
OGFC	2,000	TON	$115	$230,000
Aggregate Base (Class 2)	9,000	CY	$55	$495,000
Pavement Reinforcing Fabric	11,700	SQYD	$3	$35,100
Cold Plane AC	1,000	SQYD	$5	$5,000
Obiterate Surfacing	9,900	SQYD	$11	$108,900
			Subtotal Pavement Structural Section	**$1,279,000**

Section 3 Drainage	Quantity	Unit	Unit Price	Item Cost
Install / Modify / Replace Culvert	7	EA	$45,000	$315,000
			Subtotal Drainage	**$315,000**

Section 4 Specialty Items	Quantity	Unit	Unit Price	Item Cost
Progress Schedule (Critical Path)	1	LS	$10,000	$10,000
Erosion Control and Highway Planting	1	LS	$390,000	$390,000
Prepare Storm Water Pollution Prevention Plan	1	LS	$10,000	$10,000
Construction Site BMP Items	1	LS	$1,155,000	$1,155,000
Transition Railing (Type WB)	4	EA	$5,000	$20,000
Terminal Section (Type C)	4	EA	$250	$1,000
Construction Access	3	LS	$237,000	$237,000
Incentive for Asphalt Concrete (QC/QA) (4% of HMA & OGFC)	1	LS	$25,400	$25,400
			Subtotal Specialty Items	**$1,848,400**

Section 5 Traffic Items	Quantity	Unit	Unit Price	Item Cost
Thermoplastic Striping (4")	28,934	FT	$1.40	$40,508
Pavement Marker (Retroreflective)	343	EA	$10.00	$3,432
Portable Changeable Message Sign (PCMS)	2	EA	$6,500	$13,000
Relocate Roadside Sign	1	LS	$20,000	$20,000
Remove Roadside Sign	1	LS	$15,000	$15,000
Install Roadside Sign	1	LS	$20,000	$20,000
Construction Area Signs	1	LS	$50,000	$50,000
			Subtotal Traffic Items	**$161,940**

Traffic Additions (Added in "TOTAL SECTIONS 1 thru 5)				
Traffic Control System	1	LS	(10% Item Subtotal)	$810,900
Maintain Traffic	1	LS	(10% Item Subtotal)	$810,900
			SUBTOTAL	**$8,108,389**

TOTAL SECTIONS 1 thru 5 $9,730,189

Section 6 Minor Items		
	$9,730,189 x (5%) =	$486,509
	(Subtotal Sections 1 thru 5)	$9,730,189
	TOTAL MINOR ITEMS	**$486,509**

Section 7 Roadway Mobilization		
	$10,216,698 x (10%) =	$1,021,670
	(Subtotal Sections 1 thru 6)	$10,216,698
	TOTAL ROADWAY MOBILIZATION	**$1,021,670**

Section 8 Roadway Additions	Quantity	Unit	Unit Price	Item Cost
Supplemental Work		$10,216,698 x (5%) =		$510,835
		(Subtotal Sections 1 thru 6)		$10,216,698
Contingencies		$10,216,698 x (25%) =		$2,554,175
		(Subtotal Sections 1 thru 6)		$10,216,698
	$ Per Hour	Hours Per Day	Work Days	
COZEEP setups @ $100 per Hour Working 10 Hour Days *Estimated at 30% of total Structure workingdays	$100	10	135	$135,000
Construction Office		RE Office ($2200/month for 60 months)		$132,000
		(Subtotal Sections 1 thru 6)		$10,216,698
		TOTAL ROADWAY ADDITIONS (Sections 7 & 8)		**$4,353,679**

TOTAL ROADWAY ITEMS $14,571,000

II. STRUCTURES ITEMS

Existing Structure:		
Bridge Name	Salmon Creek Bridge (#10-0134)	
Structure Type	(309/302) Steel Deck Truss/Steel Beam Spans	
Replacement Structure:	4A	4B
Width (out to out) - (ft)	49.7	49.7
Length (begin to end bridge) - (ft)	700.0	700.0
Total Area - (SF)	34,767	34,767
Footing Type (pile/spread)	TBD	TBD
Demolition (calculated at $46.12 per SF)	$822,000.00	$822,000.00
Construction Cost per SF (preliminary)	$674.84	$828.87
Total Structure Cost =	$23,462,000	$28,817,000
SUBTOTAL STRUCTURES ITEMS (Sum of Total Cost for Structures)	**$24,284,000**	**$29,639,000**

Railroad Related Costs:	NA	
	SUBTOTAL RAILROAD ITEMS	**$0**

TOTAL STRUCTURES ITEMS	**$24,284,000**	**$29,639,000**

III. RIGHT OF WAY ITEMS

A. Acquisition, including excess lands,	$967,708
B. Mitigation acquisition & credits	$1,980,000
C. Project Development Permit Fees	$9,000
D. Utility Relocation (State share)	$0
E. Relocation Assistance (RAP)	$0
F. Clearance/Demolition	$0
G. Title and Escrow Fees	$12,000
TOTAL RIGHT OF WAY ITEMS	**$2,969,000**

H. Construction Contract Work

Brief Description of Work: East-side staged bridge replacement, realignment, shouldering widening, culvert replacement, and drainage work

Right of Way Branch Cost Estimate for Work $0

Anticipated Date of Right of Way Certification N/A
(Date to which Values are Escalated)

Estimate Prepared By: Johnathon Jackson Phone # 707-441-2059

ATTACHMENT F

STRUCTURE MAINTENANCE AND INVESTIGATIONS REPORTS

California Department of Transportation
Division of Maintenance

Structure Maintenance and Investigations

BRIDGE INSPECTION RECORDS INFORMATION SYSTEM

The requested documents have been generated by BIRIS.

These documents are the property of the California Department of Transportation and should be handled in accordance with Deputy Directive 55 and the State Administrative Manual.

Records for "Confidential" bridges may only be released outside the Department of Transportation upon execution of a confidentiality agreement.

PEER REVIEW FACT SHEET
Highway 1 Salmon Creek, Br. No. 10-0134
August 15, 2007

Project Location

01-MEN -1-PM- 43

The 685-foot long Highway 1 Salmon Creek Bridge is located on Highway 1in Mendocino County, 7 miles south of the community of Mendocino. The bridge, which was built in 1950, features a continuous 7-span steel deck truss with steel beam spans over tower bents and a non-composite cast-in-place (CIP) / reinforced concrete (RC) deck.

The bridge is designated as structurally deficient because of the condition of the deck and functionally obsolete due to the deck geometry. The structure is fracture critical due to low redundancy (steel deck truss with steel floor beams).

The bridge carries 3,200 vehicles a day of which nearly 7% are trucks.

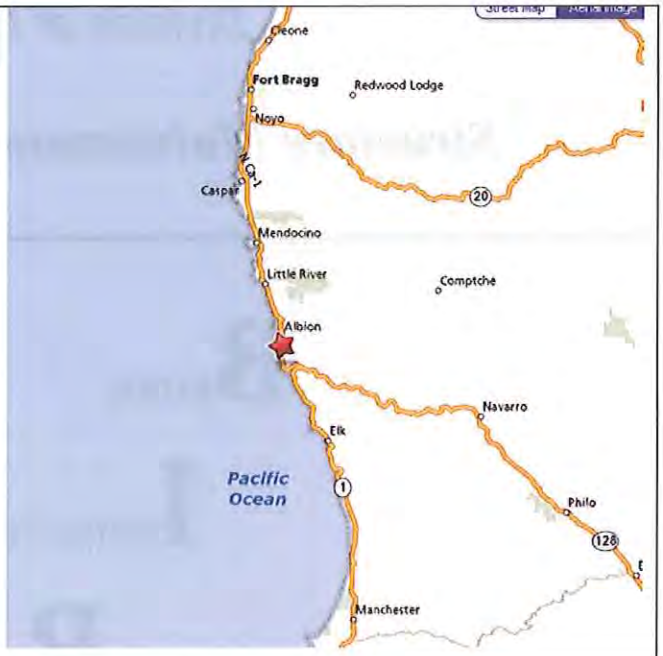

Event Description

A Structure Maintenance & Investigations (SM&I) Peer Review was convened on August 15, 2007 to discuss the recommended replacement of the Highway 1 Salmon Creek Bridge at an estimated cost of $12 million. Attendees included Investigations North Chief Pete Whitfield, Senior Bridge Engineers Michael J. Lee, Michael W. Johnson, Takako Fujioka, and Vassil Simeonov and Area Bridge Maintenance Engineer (ABME) Tim Sandoval.

This 57-year-old structure is fracture critical and has an Inventory Rating of 32.6 metric tons, a Sufficiency Rating of 49.7, and is designated as Structurally Deficient due to a Deck Condition rating of 4. This bridge is Functionally Obsolete with a Deck Geometry Appraisal rating of 3.

The bridge rail has been recommended for replacement at a cost of $725,000 because it does not meet current standards.

The paint health index is 93.86. Caltrans in house crews painted the Salmon Creek Bridge in 2004/2005. The coating system is already starting to corrode at numerous lateral brace, floor beam and gusset plate locations. The horizontal painted steel beam on the left side of the bottom chord of Tower 3-4 has severe corrosion and section loss. Various steel members throughout both trusses have minor section loss. The bridge will require full removal of the existing coating

The 57-year-old bridge is classified as fracture critical.

The Salmon Creek Bridge will require painting every 4 to 5 years.

system and repainting every 4- 5 years. The bridge contains 72,000 square feet of paint area. The current work recommendation, to be modified, calls for spot prep and spot painting at a cost of $100,000. The cost to perform the required paint maintenance (full prep and full painting on a 4 to 5 year cycle) = 72,000 sq. ft x $35/sq. ft. = $2.5 million.

Note: This $2.5 million maintenance painting cost will be required every 5 years, i.e. year 2010, 2015, 2020, etc. until the bridge is replaced

In addition, a March 2007 work recommendation was made to address potential seismic vulnerability (Priority 4. Final Score 2.1875 as calculated by the Office of Earthquake Engineering) by strengthening the steel truss members at an estimated cost of $1,018,000.

There are several work recommendations to repair spalls and delaminations in the deck and substructure. The estimated cost is about $86,000.

The bridge is not Scour Critical with the foundations determined to be stable for calculated scour conditions and the scour within the limits of piles.

The replacement has been identified as a candidate for funding through the State Highway Operation and Protection Program (SHOPP).

Rehabilitation would include upgrading the bridge rail.

Alternatives Considered

1) Do nothing - This alternative was not considered due to the need to repaint the bridge, complete recommended seismic strengthening and upgrade the bridge rail to ensure the safety and reliability of this bridge.
2) Rehabilitate the bridge. This alternative involves upgrading the rail, painting the steel deck truss, repairing reinforced concrete spalls and delaminations, and completing the seismic retrofit. Total Estimated Cost = $4,329,000 X 1.2 = $5,195,000.
3) Replace bridge at an estimated cost of $400/sq. ft. X 30,170 sq. ft. = $12,068,000.

Repair Strategy

Due to the cost of upgrading this 57 year old structure and the need for future annual preventive maintenance ($2.5 million painting cost will be required every 5 years), the Peer Review unanimously affirmed the replacement as the best course of action to ensure the safety and reliability of this critical link of the state highway system.

DEPARTMENT OF TRANSPORTATION
Structure Maintenance & Investigations

Bridge Number : 10 0134
Facility Carried: STATE ROUTE 1
Location : 01-MEN-001-43
City :
Inspection Date : 08/03/2007

Bridge Inspection Report

Inspection Type

Routine	FC	Underwater	Special	Other
				X

STRUCTURE NAME: SALMON CREEK

CONSTRUCTION INFORMATION

Year Built : 1950
Year Widened: N/A
Length (m) : 208.8

Skew (degrees): 0
No. of Joints : 18
No. of Hinges : 0

Structure Description: Continuous 7-span steel deck truss (Warren type) with steel beam spans over tower bents, with (non-composite) CIP/RC deck. RC framed bents and RC cantilever abutments. Abutment 1 is founded on RC spread footings. Bent 2, Tower 3-4, Bent 7 and Abutment 8 are on driven steel H piles. Tower 5-6 is on driven untreated Douglas Fir timber piles.

Span Configuration : 42.7 m, 36.6 m, 6.1 m, 48.8 m, 6.1 m, 36.6 m, 30.5 m

LOAD CAPACITY AND RATINGS

Design Live Load: MS-18 OR HS-20
Inventory Rating: 32.6 metric tons Calculation Method: LOAD FACTOR
Operating Rating: 43.5 metric tons Calculation Method: LOAD FACTOR
Permit Rating : POOXX
Posting Load : Type 3 N/A Type 3S2 N/A Type 3-3 N/A

DESCRIPTION ON STRUCTURE

Deck X-Section: 0.3 m br, 0.6 m cu, 7.9 m, 0.6 m cu, 0.3 m br
Total Width: 9.8 m Net Width: 7.9 m No. of Lanes: 2
Rail Description: Steel Baluster bolted to the RC curb Rail Code : 0000
Min. Vertical Clearance: Unimpaired

DESCRIPTION UNDER STRUCTURE

Channel Description: Narrow channel in a steep canyon, transitioning to flat, meandering reach 400 m upstream of the bridge. The creek may be tidally influenced. Creek has a gravel and sand bed and overbank.

CONDITION TEXT

REVISIONS

Element #131, Painted Steel Deck Truss, Quantity - 50, has been downgraded to condition state 3 due to rust developing on the truss members.

Element #152, Steel Floor Beam, Painted, Quantity - 50 meters, has been downgraded to condition state 3 due to the development of rust on the edge of the flanges on several of the floor beams.

Element #113, Steel Stringer, Painted, Quantity - 25 meters, has been downgraded to condition state 3 due to rust that is developing on the edges of the flanges.

CONDITION OF STRUCTURE

This "Other" inspection was performed as a response requested by the Federal Department of Transportation on 8/2/2007 under Technical Advisory 5140.27 - Immediate Inspection of Deck Truss Bridges Containing Fracture Critical Members (FCM).

ClibPDF - www.fastio.com

CONDITION TEXT

This inspection concentrated only on the steel members (deck truss, floor beams and stringers) of the bridge. The steel members were visually observed from the catwalk that is adjacent to the left (west) truss. As a result the right side truss and upper steel members could not be properly evaluated (within arms reach) during this inspection. Further, the height of the truss above the ground and the dense vegetation (including an abundance of poison oak) that covers the terrain below the bridge precluded access to and inspection of the underside of the bridge. The last close up inspection of the steel members on the bridge was in April 2006 using the Under Bridge Inspection Truck (UBIT).

During this inspection some areas of rust were observed mostly along the edges of several of the diagonal braces and on many of the rivets on the diagonal braces, as well as, along the edges of the flanges of the truss, stringers, and floor beams, most notably the floor beams at U26, U30, U31, and U32. The floor beams are most likely rust stained due to leakage through the expansion joints in the deck.

PAINT CONDITION

Overall, the paint system appears to be in good condition, however there are a few areas with some chalking and several areas where rust has developed along the edges of the flanges and diagonal braces. Most of the chalking is located on the diagonal braces, while the rust stains are mostly located on the edges of the gusset plates and on the diagonal braces.

FRACTURE CRITICAL INVESTIGATION

The bridge is a Fracture Critical structure because of the lack of redundancy of the steel deck truss. The Fracture Critical Investigation Team is responsible for inspection of the fracture critical steel elements of this bridge.

The most recent Fracture Critical investigation was performed on April 5, 2006. The methods of investigation were visual inspection and ultrasonic testing. No defect indications were found.

Inspected By : W. John Baker

Registered Civil Engineer

REGISTERED PROFESSIONAL ENGINEER
W. JOHN BAKER
No. C 60307
Exp. 06/30/08
CIVIL
STATE OF CALIFORNIA

9/13/07

ClibPDF - www.fastio.com

District : 01

Bridge Number : 10 0134 | Total Length: 208.8 | Permit Rating: POOXX | Suff Rating : 49.70
Feat Intersected: SALMON CREEK | Total Width : 9.8 | Rail Rating : 0000 | Approach Width: 8.8
Stucture Name : SALMON CREEK | Location : 01-MEN-001-43 | STRUCTURALLY DEFECIENT

Item	Recom. Date	Project Type	Urgency Factor	Cost	Status	Tech. rank
1	02/10/1984	62 - Railing-Upgrade	2 years	$725,000	1 - Initiated	1.22
2	03/28/2007	70 - Seismic-Retrofit	2 years	$1,018,000	1 - Initiated	2.19
3	07/01/2002	80 - Bridge-Replace	2 years	$12,068,000	1 - Initiated	46.64

Project Details :

1 F1-06 / F2-0 / F3-5 / Rail Type-SR. Replace the bridge rail.

2 Steel truss members may require strengthening. Priority 4. Final Score 2.1875.

3 THIS AGING STRUCTURE IS IN A MARGINAL AND DETERIORATING CONDITION. IT IS FUNCTIONALLY OBSOLETE, HAS A LOW LOAD RATING, AND IS AN INAPPROPRIATE DESIGN FOR THE ENVIRONMENT. THE LIFE CYCLE ECONOMIC COST OF ADEQUATE MAINTENANCE DOES NOT COMPARE FAVORABLY WITH COST OF REPLACEMENT WITH A STRUCTURE TYPE BETTER SUITED TO THE ENVIRONMENT.

IT IS THEREFORE URGENTLY RECOMMENDED THAT THIS STRUCTURE BE REPLACED. AN SM&I PEER REVIEW IN AUGUST 2007 REAFFIRMED THE RECOMMENDATION THAT THIS BRIDGE BE REPLACED.

Bridge Number : 10 0136 | Total Length: 295.4 | Permit Rating: POOXX | Suff Rating : 68.20
Feat Intersected: ALBION RIVER | Total Width : 8.6 | Rail Rating : 0110 | Approach Width: 7.3
Stucture Name : ALBION RIVER | Location : 01-MEN-001-43.74 | FUNCTIONALLY OBSOLETE

Item	Recom. Date	Project Type	Urgency Factor	Cost	Status	Tech. rank
1	07/01/1986	29 - Sub-Misc.	2 years	$1,500,000	1 - Initiated	51.21
2	02/10/1984	62 - Railing-Upgrade	2 years	$1,009,000	1 - Initiated	16.31
3	03/28/2007	70 - Seismic-Retrofit	2 years	$1,270,000	1 - Initiated	2.81
4	04/05/1999	80 - Bridge-Replace	2 years	$13,200,000	1 - Initiated	51.21

Project Details :

1 Remove and replace the bolted connections and hardware (threaded rods, malleys, nuts, plates, etc) throughout the entire timber sub-structure. Replace the top left horizontal timber element between Bent 15 and Bent 16.

2 F1-10 / F2-6 / F3-1 / Rail Type-WOOD. Replace the bridge rail.

3 Steel truss members may require strengthening. Priority 4. Final Score 2.8125.

4 Replace the steel main span. Estimated at $2,000,000 (NOT including traffic handling costs). Or, replace the entire structure. Estimated at $13,200,000.

ATTACHMENT G

PRELIMINARY MATERIALS
RECOMMENDATION

State of California Business, Transportation and Housing Agency

Memorandum

To: Ilene Poindexter
Division Chief,
Advance Planning

Date: November 25, 2008

Attn: Johnathon Jackson

File: 01-MEN-1-PM 42.5/43.3
01-40140K
Salmon Creek Br. #10-0134
201.110
Bridge Rehabilitation

From: DEPARTMENT OF TRANSPORTATION - North Region
Wesley D. Johnson - North Region, Eureka Materials
Wesley D. Johnson

Subject: Preliminary Materials Recommendation

In response to a request from Johnathon Jackson of your office, dated October 10, 2008, the project history files in the Eureka Materials Lab were reviewed for a determination of R-value (resistance to deformation) from previous work within the limits of the project area. Due to the response time requested and the developmental phase of the project, no soil sampling was conducted. A review of a nearby realignment project to the south at Post Mile 42.5 (EA 01-149004) indicated R-values of the original soils ranging from of 18 to 65 at or near this location of State Route 1. For the purposes of this report, an assumed R-value of 20 and a 20 year Traffic Index of 9.0 which was provided by the Office of Traffic Forecasting and Modeling was used for calculation of the structural section.

Existing Structural Section

A review of the Materials Laboratory's Structural Section History Files and the "as-built" project files indicate various layers of Asphalt Concrete (AC) totaling approximately 0.67 feet and placed on combinations of Cement Treated Base (CTB) and Aggregate Base (AB). This section of roadway was surfaced in 2001 with 0.08 feet (25mm) of OCAC by EA 01-413504. See Attachment "A" for limits, types, age, and

REGISTERED PROFESSIONAL ENGINEER
WESLEY D. JOHNSON
C66006
EXP. 06/30/10
CIVIL
STATE OF CALIFORNIA

Wesley D. Johnson

thicknesses of existing AC. If existing structural section thicknesses at specific locations are required, please request coring services from this office.

New Structural Sections for Mainline & Shoulders:

Based on an assumed R-value of 20, and a 20 year traffic index of 9.0, the following structural section strategies are recommended for mainline traffic and shoulders. Each strategy is structurally equivalent.

Strategy	OGFC	HMA (Type A)	AB (Class 2)	AS (Class 2)
1	0.17′	0.45′	0.75′	0.70′
2	0.17′	0.45′	1.35′	----
3	0.17′	1.05′	----	----

Notes:

- Local or imported borrow used to construct embankment, must meet a minimum R-value of 25 when placed within 4 feet of finished grade.

- For structural sections designed to last 20 years, the alternative to use full depth HMA (Type A) should be considered for special situations only. This would include, but not be limited to, narrow widening, shallow utilities coverage, or shortening traffic control periods.

- When a widened shoulder or new structural section is constructed to adjoin an existing structural section, geosynthetic pavement interlayer (GPI) should be placed so that it will overlap the new/existing joint by 2 feet on each side. Placement of the GPI should be as low in the HMA as possible and on the same plane for both the existing structural section and the new structural section. This will help prevent reflective cracking from the underlying joint. Please see Attachment "B" for detail.

- Use a material transfer vehicle (MTV) to deliver HMA-A and OGFC directly from the truck to the paver's receiving hopper or feed system. The MTV must:

  1. Remix the HMA or OGFC before loading the paver.
  2. Be self propelled and independent of the paver.
  3. Have a minimum capacity of 20 tons.

Material Specifications

- Hot Mix Asphalt (HMA): Shall be Type A (HMA-A), conforming to revised Section 39 of the Standard Specifications. See Attachment "C" for a recommendation of grading size versus lift thickness.

- Hot Mix Asphalt Open Graded Friction Course (OGFC) shall be 1 inch gradation and shall conform to revised Section 39 of the Standard Specifications.

- Paint Binder (Tack Coat): Shall conform to revised Section 39 of the Standard Specifications.

- Asphalt Binder: Shall be PG 64-16 for hot mix asphalt (HMA-A) and PG 58-34 PM for OGFC. The estimated percentage of asphalt to be added per dry weight of aggregate is 5.5% for 3/4 inch HMA-A and 5.8% for 1/2 inch HMA-A. The estimated percentage of asphalt to be added per dry weight of aggregate is 4.5% for 1 inch OGFC. OGFC shall be treated with liquid anti-strip at a rate of 0.5% by mass of asphaltic binder (PG 58-34 PM).

- Asphalt Concrete Dike: Hot Mix Asphalt used in the construction of dikes shall be Type A (HMA-A), 3/8 inch, conforming to revised Section 39 of the Standard Specifications. Asphalt binder used in construction of dikes shall conform to the standard special provisions for PG 70-10. Please see Attachment "D" for construction details for modified dike installation when open graded friction course is placed.

- Aggregate Base (AB): Shall be Class 2, conforming to Section 26 of the Standard Specifications with the following changes: The Durability Index per California Test Method 229 shall be 25 minimum and the minimum loose unit weight per California Test Method 212, Compacted Method (by rodding) shall be 105 lb/ft^3.

- Aggregate Subbase (AS): Shall be Class 2, conforming to Section 25 of the Standard Specifications.

- Shoulder Backing: Shall conform to the requirements within the Standard Special Provisions for shoulder backing, with the following change: The minimum loose unit weight per California Test Method 212a, (Compacted Method (by rodding)) shall be 105 lbs/ft^3.

Alternative Pipe Culverts

Based on historic data on soil pH and resistivity testing from locations near the limits of this project, the following alternative pipe culverts are recommended for a 50 year service life.

- Reinforced Concrete Pipe may be used with the following addition to Section 65 of the Standard Specifications: Type II modified or Type IP cement shall be used with a maximum water-to-cement ratio of 0.45.

- 0.138" (10 gage) galvanized, corrugated steel pipe conforming to

Section 66 of the Standard Specifications.

- 0.079" (14 gage) galvanized, polymeric sheet coated, corrugated steel pipe conforming to Section 66 of the Standard Specifications.

- Plastic pipe - Shall be high density polyethylene (HDPE), conforming to Section 64 of the Standard Specifications. Reference should be made to durability in Section 854.8 of the Highway Design Manual.

See Attachment "E" or "F" for culvert installation details.

If you have any questions, please call me at (707)445-6386 or Dave Waterman at (707)445-6355.

Attachments

WJ:wj

cc: I. Poindexter
J. Jackson
J. Pimentel
V. Langtry
G. Kim Tell
Lab Files

01-MEN-1 PM 42.5 / 43.3
01-40140K

Attachment A

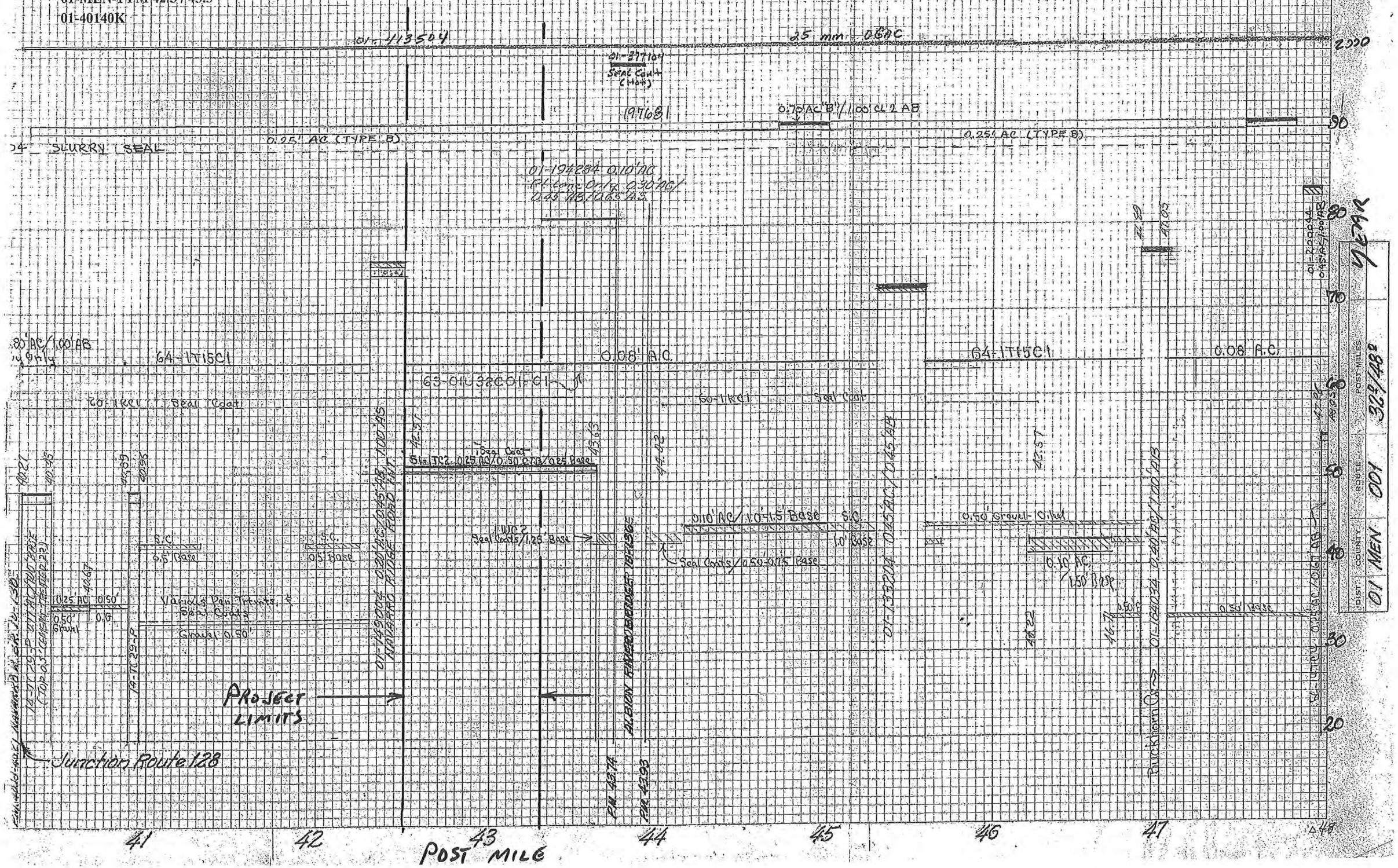

Attachment B

01-MEN-1 PM 42.5 / 43.3
01-40140K

Structural Section and Geosynthetic Pavement Interlayer (GPI) Detail

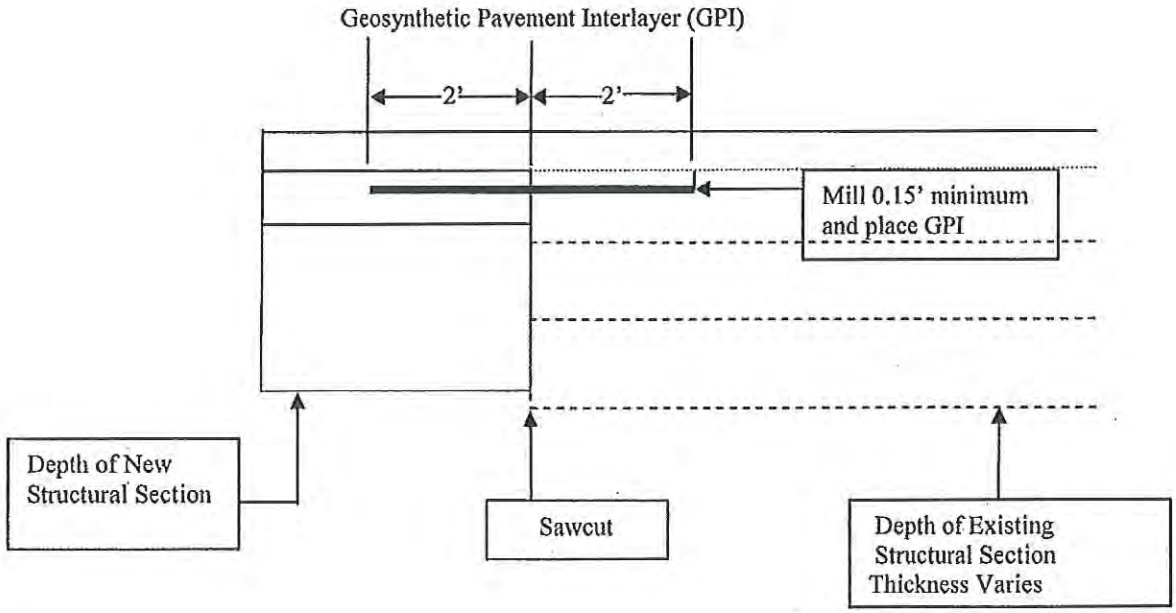

NO SCALE

Attachment C

01-MEN-1 PM 42.5 / 43.3
01-40140K

Aggregate Size and Layer Thickness
Hot Mix Asphalt (HMA) Type A

Use the following table to determine the grading:

Lift Thickness Range	Grading
0.08 foot – 0.125 foot	3/8 inch
0.125 foot – 0.20 foot	1/2 inch
0.20 foot and above	3/4 inch

ATTACHMENT D

01-MEN-1 PM 42.5 / 43.3
01-40140K

MODIFIED HMA DIKE

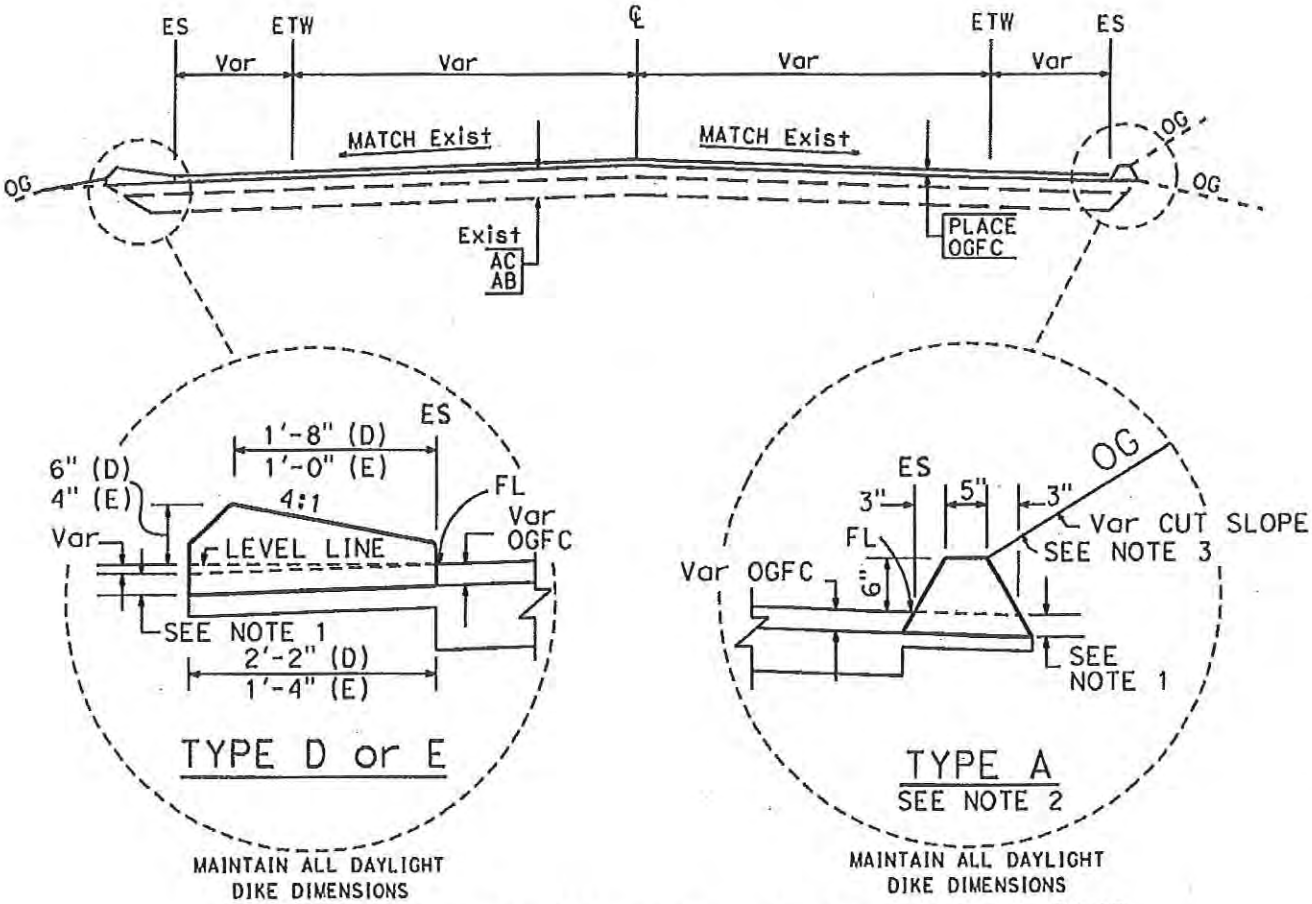

HOT MIX ASPHALT DIKE TYPICAL
WHEN PLACED WITH OGFC

DIKE QUANTITIES

TYPE	CUBIC YARDS PER LINEAR FOOT
A	* 0.0135
C	* 0.0038
D	* 0.0293
E	* 0.0130
F	* 0.0066

QUANTITIES BASED ON 5% CROSS SLOPE

* ADJUST QUANTITY TO COMPENDATE FOR OGFC DEPTH/HMA DIKE HEIGHT EXTENSION

NOTES:

1. THE ADDITIONAL HEIGHT OF DIKE SHALL BE EQUIVALENT TO THE DEPTH OF OGFC.
2. TYPE A DIKE ONLY TO BE USED WHERE RESTRICTIVE SLOPE CONDITIONS DO NOT PROVIDE ENOUGH WIDTH TO USE TYPE D OR TYPE E DIKE.
3. FILL AND COMPACT WITH EXCAVATED MATERIAL TO TOP OF DIKE.

NO SCALE

Attachment E

Structure Backfill, or Slurry Cement Backfill

01-MEN-1 PM 42.5/43.3
01-40140K

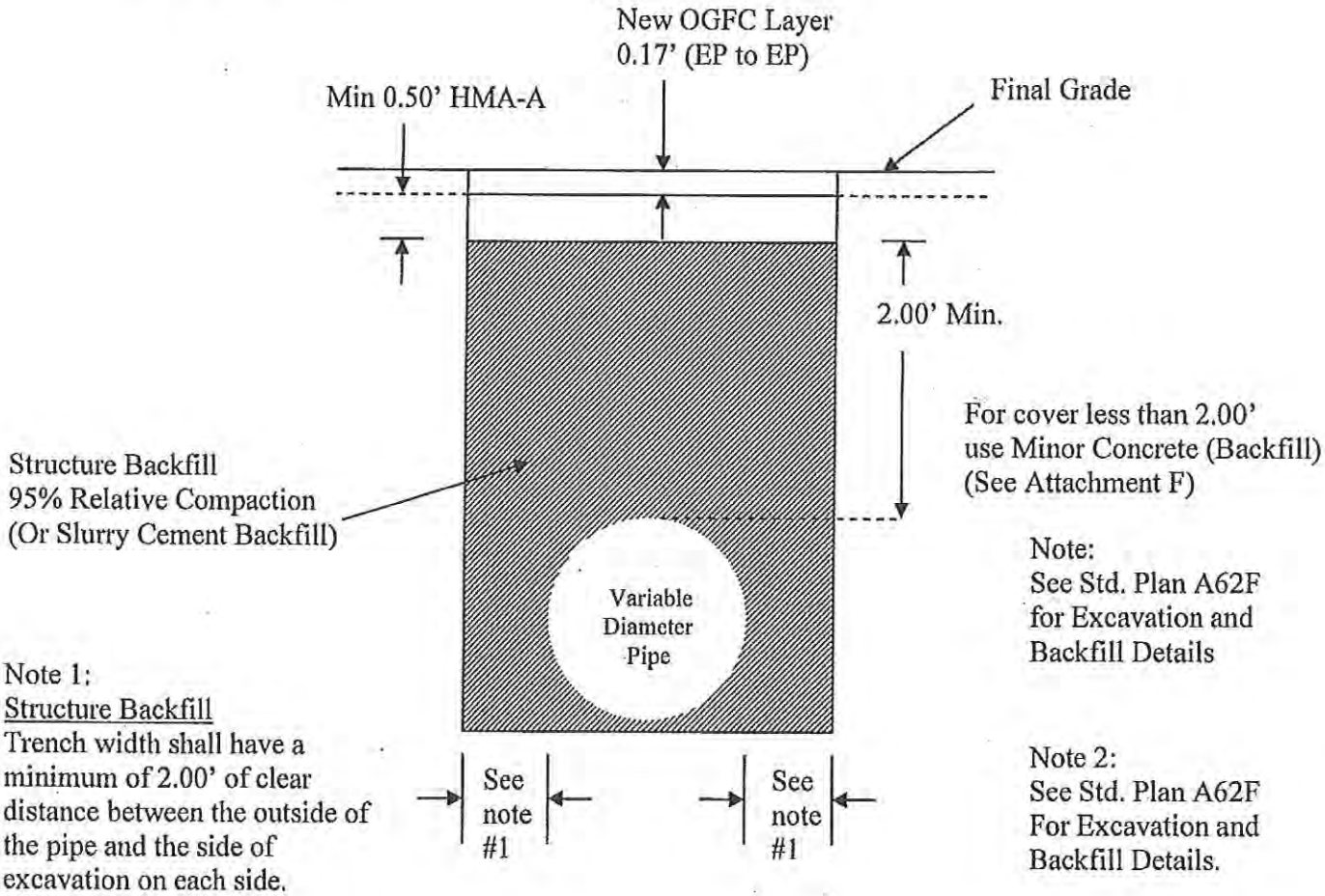

Note 1:
<u>Structure Backfill</u>
Trench width shall have a minimum of 2.00' of clear distance between the outside of the pipe and the side of excavation on each side.

<u>Slurry Cement Backfill</u>
Trench width shall be a minimum of 0.50' beyond outside edge of pipe and the side of excavation on each side for pipe diameters up to and including 42", or 1.00' for pipes over 42" in diameter. See Standard Specifications 19-3.062

NO SCALE

Attachment F

01-MEN-1 PM 42.5/43.3
01-40140K

Minor Concrete (Backfill)

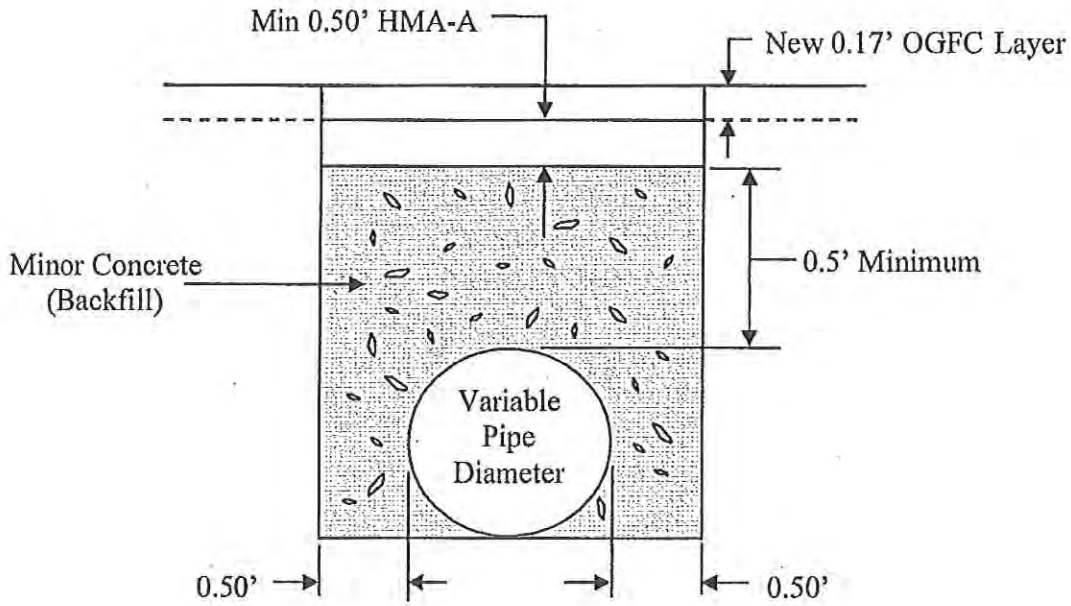

NO SCALE

ATTACHMENT H

INITIAL SITE ASSESSMENT (ISA)

State of California

Business, Transportation and Housing Agency

Memorandum

To: Jonathon Jackson
Project Engineer
1656 Union Street
Eureka CA 95501

Date: November 14, 2008

File No: 01-Men-01
PM 42.5/43.3
Bridge Replacement
Salmon Creek Bridge,
Bridge #10-0134

EA: 01-40140K

From: DEPARTMENT OF TRANSPORTATION
Office of Environmental Engineering – South (OEES)

Subject: Initial Site Assessment (ISA)

Per your request, OEES has prepared this ISA for the above referenced project. The project proposes to replace/rehabilitate the above referenced bridge located near the town of Albion. Potential work includes bridge demolition and construction, drainage system modifications, and earthwork. Soil and vegetation will be disturbed during construction. Excess material may need to be disposed of offsite. New r/w and/or temporary construction easements will be needed.

Based on this review a Preliminary Site Investigation (PSI) including a structural survey of the existing bridge is required for this project. Please include 160 hours under WBS 165.10.50 and $13,500 in the project budget to cover our time and the consultants cost to complete the PSI. Once the PSI is requested it will take from 3 to 5 months to complete the field investigation and final report. Ideally, the PSI should be completed by PAED.

If there are any significant changes to the project scope, or if new information is identified, please contact the OEES, as soon as reasonably possible so the significance of the information and the need for additional studies can be assessed. If you have any questions or comments, please feel free to call me at (530) 741-4556.

Mark Melani

Mark Melani,
Office of Environmental Engineering – South

cc: File
Denise Gibson, Associate Environmental Planner
(Electronic copy only)

ATTACHMENT I

LANDSCAPE ARCHITECTURAL ASSESSMENT SHEET (LAAS)

NORTH REGION
LANDSCAPE ARCHITECTURE ASSESSMENT SHEET
03-LAND-0002 (Rev. 3/03)

TO: Johnathon Jackson **FROM:** Jim Hibbert **Unit/Senior TE Name:** 03-341/Ron Flory **Project Manager:** Mike Yancheff	**CO:** MEN **DISTRICT:** 01 **DATE:** 11/13/08 **EA:** 01-40140K	**RTE:** 1	**KP:**	**PM:** 42.5/43.3
PROJECT SEPARATION: ☒ Landscape as part of roadway work EA ☐ Landscape under separate EA (Follow-up)	**PROJECT:** Salmon Creek Bridge Replacement **TYPE:** SHOPP **PROJECT MILESTONE:** PID			

PROJECT DESCRIPTION: The following alternatives are being evaluated to replace the Salmon Creek Bridge. All alignments consist of two 12-foot travel lanes, two 6 to 8-foot shoulders, and one 5-foot pedestrian walkway with barrier on the west side of the structure. Alternative 1 is located on the west side of the existing Salmon Creek Bridge. It is 724 feet long and 130 to 140 feet high. Alternative 2 is located on the east side of the existing Salmon Creek Bridge. It is 700 feet long and 130 to 140 feet high. Both alternatives will likely allow two traffic lanes to remain open during most of the construction.

AREA (YD2) FOR HIGHWAY PLANTING: Unknown at this time
AREA (YD2) FOR EROSION CONTROL: Unknown at this time
PLANT COUNT FOR MITIGATION PLANTING: Unknown at this time

LANDSCAPE FREEWAY STATUS:	☐ Yes	☒ No	
HIGHWAY PLANTING IS:	☐ Warranted	☒ Not Warranted	
SCENIC HIGHWAY STATUS:	☐ Officially Designated	☒ Eligible	☐ Not Designated
REVEGETATION REQUIRED?	☒ Permit Required	☒ Offset of Visual Impact	☐ Other (Forest Service, BLM, etc.)
BIOLOGIST CONTACT:	Rebecca Loeffler		
DATE OF CONTACT:	11/13/08		
REVEG. SPECIALIST CONTACT:	Clare Golec		

ADJACENCY TO BILLBOARDS:
☐ Project area is adjacent to outdoor advertising. ☒ Project area is not adjacent to outdoor advertising.

WATER AND POWER AVAILABILITY: N/A

IS THERE (E) IRRIGATION THAT WILL BE IMPACTED BY THIS PROJECT: ☐ Yes ☒ No

DESIGN FOR MAINTENANCE SAFETY: N/A

CONTEXT SENSITIVITY:
☒ It is determined that the project will involve consideration of highway aesthetics and will require further evaluations pertaining to specific roadside enhancements.

☐ No foreseen issues with highway aesthetics ☐ Other _____

COOPERATIVE MAINTENANCE AGREEMENTS:

Project may involve additional tasks indicated			
	☒ Visual Simulation	☒ Erosion Control	☒ SWPPP/NPDES
	☒ Revegetation	☒ Field Visit	☒ Context Sensitive Solutions/Aesthetics
	☒ Contour Grading	☒ Cost Estimate	☒ Landscape Evaluation

NORTH REGION
LANDSCAPE ARCHITECTURE ASSESSMENT SHEET
03-LAND-0002 (Rev. 3/03)

COST INFORMATION:	
☒ Revegetation Including Plant Establishment	**$300,000**
☒ Erosion Control	**$60,000**
☒ Slope Protection – Fiber Rolls	**$30,000**
☐ Aesthetic Treatment	**$ /ft²**
	TOTAL $390,000

OTHER RELATED INFORMATION:
☐ Landscape Architecture Resource Estimate: Attached to this document.

ROADSIDE VEGETATION MANAGEMENT TREATMENT NEEDS:
☐ Extended Gore Areas
☒ Guardrails and Signs
☐ Medians
☐ Road Edge
☒ Side Slopes/Embankment Slopes
(See: http://www.dot.ca.gov/hq/LandArch/roadside/index.htm for potential treatment measures)

PREPARED BY: [signature] DATE: 11/14/08 CONCURRED BY: Mike Youchef DATE: 14 Nov 08
(Project Manager)

APPROVED BY: [signature] DATE: 11.14.08
(Landscape Architecture or Engineering Services Branch Chief)

ATTACHMENT J

STORM WATER DATA REPORT

Caltrans

Dist-County-Route: 01-MEN-1

Post Mile (Kilometer Post) Limits: PM 42.43 – 43.33

Project Type: Salmon Creek Bridge Replacement

EA: 01-40140K

RU: 01-216

Program Identification: 201.110

Phase: ☒PID ☐PA/ED ☐PS&E

Regional Water Quality Control Board(s): North Coast Regional Water Quality Control Board

Is the project required to consider incorporating Treatment BMPs? ☒Yes ☐No

If yes, can Treatment BMPs be incorporated into the project? ☒Yes ☐No

If No, a Technical Data Report must be submitted to the RWQCB at least 60 days prior to PS&E Submittal. List submittal date: _____

Total Disturbed Soil Area: 8.8 to 11.4 acres

Estimated Construction Start Date: 05/01/2014 Construction Completion Date: 05/01/2016

Notification of Construction (NOC) Date to be submitted: _____

Notification of ADL reuse (if Yes, provide date) ☐Yes Date: _____ ☒No

Separate Dewatering Permit (if Yes, permit number) ☐Yes Permit #: _____ ☐No

This Report has been prepared under the direction of the following Licensed Person. The Licensed Person attests to the technical information contained herein and the data upon which recommendations, conclusions, and decisions are based. Professional Engineer or Landscape Architect stamp required at PS&E.

6/17/09

Jeffrey L. Pimentel, *Registered Project Engineer/Landscape Architect* — Date

I have reviewed the storm water quality design issues and find this report to be complete, current, and accurate:

Mike Yancheff 6/19/09

Mike Yancheff *Project Manager* — Date

Brett Johnson 6/17/09

Brett Johnson *Designated Maintenance Representative* — Date

6-30-09

Jim Hibbert *Designated Landscape Architect Representative* — Date

Ted Schultz 6-12-09

Ted Schultz *District/Regional SW Coordinator or Designee* — Date

STORM WATER DATA INFORMATION

1. Project Description

The Salmon Creek Bridge is located on State Route 1 in Mendocino County, from PM 43.00 to PM 43.13, near Albion, 2.7 miles north of the Route 128 junction.

Need:
The Salmon Creek Bridge and approaching alignment have a number of structural and geometric deficiencies. The structure has a Sufficiency Rating of 49.70 percent and the Structure Replacement and Improvement Needs (STRAIN) Report (dated 08/08) Urgency Factor is two years.

Structural Deficiencies: The structure is fracture critical due to a lack redundancy of the steel truss deck members and is designated as Structurally Deficient due to the condition of the deck. The structure currently requires painting every 4 to 5 years at a cost of $2,500,000, and was last painted in 2004/2005. The paint coat is already starting to corrode at numerous lateral brace, floor beam, and gusset plate locations. The horizontal beam on the left side of tower 3-4 has severe section loss, and various members throughout both trusses have minor section loss. The structure currently requires spot preparation and painting at a cost of $100,000. The Peer Review Fact Sheet (dated 08/15/07) recommends stripping the existing coat to allow for fracture critical inspection. The existing rail has been recommended for replacement because it currently does not meet standards. To eliminate potential seismic vulnerability, strengthening of the steel truss members will need to be performed at a cost $1,018,000. There are several work recommendations to repair spalls and delaminations in the deck and substructure at a cost of $86,000. The life cycle economic cost of maintenance ($5.2 million) does not compare favorably with the cost of replacement with a structure type better suited to the environment.

Geometric Deficiencies: The Salmon Creek Bridge is on the STRAIN Report as Functionally Obsolete due to a non-standard deck width.

Purpose:
The purpose of this project is to replace this functionally obsolete and structurally deficient bridge with a structure that will improve geometrics and structural integrity to ensure uninterrupted traffic movements in the event of a vehicular breakdown, seismic event, or other catastrophic failure. There is no interim retrofit work that can reduce the geometric and structural deficiencies of the existing structure.

Alternatives:
The following alternatives are being evaluated to replace the Salmon Creek Bridge. All proposed replacement structures consist of two 12-foot travel lanes, two 8-foot shoulders, and one 5-foot pedestrian walkway with barrier on the west side of the structure. The proposed roadway cross-section for all alternatives include two 12-

foot lanes and 4-foot shoulders as specified by the Route Concept Report for this segment of highway.

Alternative 1: This alignment is located west and clear of the existing Salmon Creek Bridge. The replacement structure is 770 to 800 feet long, 131 to 141 feet, and is located on a 1,000-foot vertical sag curve. This alternative will likely allow two traffic lanes to remain open during most of the construction. The proposed centerline for Alternative 1, at the location of the Salmon Creek Bridge, is 53 feet offset west and parallels the existing bridge alignment.

To the south of the existing structure, Nonella Lane and Navarro Ridge Road will be minimally affected by the realignment of the roadway with incorporation of a proposed 10,000-foot horizontal curve at PM 42.54. Pacific Reefs Road will also be minimally affected by the realignment.

Alternative 2: This alignment is located east and clear of the existing Salmon Creek Bridge. The replacement structure is 700 to 720 feet long, 131 to 138 feet high, and is located on a 1,000-foot vertical sag curve. This alternative will likely allow two traffic lanes to remain open during most of the construction. The proposed centerline for Alternative 2, at the location of the Salmon Creek Bridge, is 50 feet offset east and parallels the existing bridge alignment.

To the south of the existing structure, Nonella Lane and Navarro Ridge Road will be minimally affected by the realignment of the roadway with incorporation of a proposed 6,000-foot horizontal curve at PM 42.54. Pacific Reefs Road will also be minimally affected by the realignment.

Alternative 3: This alignment is located west of the existing Salmon Creek Bridge. The proposed replacement structure will be constructed in stages, and is 700 feet long, 131 to 137 feet high, and is located on a 1,000-foot vertical sag curve. This alternative will require one-way reversible traffic during the second stage of construction. The proposed centerline for Alternative 3, at the location of the Salmon Creek Bridge, is 17 feet offset west and parallels the existing bridge alignment.

To the south of the existing structure, Nonella Lane and Navarro Ridge Road will be minimally affected by the realignment of the roadway with incorporation of a proposed 10,000-foot horizontal curve at PM 42.54. Pacific Reefs Road will also be minimally affected by the realignment.

Alternative 4: This alignment is located east of the existing Salmon Creek Bridge. The proposed replacement structure will be constructed in stages, and is 700 feet long, 131 to 138 feet high, and is located on a 1,000-foot vertical sag curve. This alternative will require one-way reversible traffic for the second stage of construction. The proposed centerline for Alternative 4, at the location of the

Salmon Creek Bridge, is 23 feet offset east and parallels the existing bridge alignment.

To the south of the existing structure, Nonella Lane and Navarro Ridge Road will be minimally affected by the realignment of the roadway with incorporation of a proposed 10,000-foot horizontal curve to at PM 42.54. Pacific Reefs Road will also be minimally affected by the realignment.

Over the entire segment of the proposed project, new roadway structural section will increase the impervious area and require that the existing surface be disturbed. Reprofiling the vertical profile of the segment within the proposed project limits yields cut- and fill-slopes. The degree to which the proposed project will increase the impervious area and disturb the existing soils has been preliminarily quantified and summarized below.

ALTERNATIVE	PRE PROJECT IMPERVIOUS AREA	POST PROJECT IMPERVIOUS AREA	DISTURBED AREA
1	4.7 ACRES	6.9 ACRES	8.8 ACRES
2		6.9 ACRES	11.4 ACRES
3		6.2 ACRES	9.3 ACRES
4		6.9 ACRES	10.7 ACREA

The Salmon Creek Bridge Replacement project limits are not within an urban MS4 area.

2. Define Site Data and Storm Water Quality Design Issues (refer to Checklists SW-1, SW-2, and SW-3)

SW2-1. Topology within project limits consists of a moderate slopes with the bridge spanning a canyon with slopes steeper than 1:1. The bridge and all culverts along the project segment have been identified as being within the USGS Big-Navarro-Garcia Hydrologic Unit Code (#18010108), and within the Albion River Hydraulic Area (#113.40), except for two RCP culverts located at PM 43.36 and 43.53 which are within the Navarro River Hydrologic Area (#113.50).

SW2-2. The majority of the Salmon Creek Bridge Replacement project drains into Salmon Creek, which is not a 303(d) listed water body, and into the Pacific Ocean. Salmon Creek enters the Pacific Ocean at Whitesboro Cove 300 feet west of the existing bridge. The remainder of the project drains to unnamed channels directly to the Pacific Ocean. The project is located in the Mendocino Coast Hydrologic Unit.

SW2-3. Based on the FY 2008-2009 District 1 Work Plan (DWP) listing, no high-risk areas are located within the project limits.

SW2-4. The North Coast Regional Water Quality Control Board (NCRWQCB) approved Resolution R1-2004-0087, Total Maximum Daily Load Policy Statement for Sediment Impaired Waters in the North Coast Region on November 29, 2004. The Policy identifies existing permitting and enforcement tools, specifically Section 401 Water Quality Certifications, as methods to control sediment pollution. The NCRWQCB 401 Certification states, "Proposed Storm Water Treatment Measures (Describe the methods proposed to treat storm water runoff from the project site prior to entering the storm drain system, wetlands, streams, etc.)"

SW2-5. Environmental: Seasonal construction and construction exclusion dates are unknown at this time, but the project estimated construction time is 3 to 5 years. Coho, Chinook, and Steelhead inhabit Salmon Creek.

SW2-6. With the previously described work in the streambed of Salmon Creek, culverts and ditches, a Regional Water Quality Control Board 401 Certification is expected to be required for this project. Additionally, a 1601 Permit from California Department of Fish & Game, and a Section 404 Permit from the US Army Corp of Engineers is expected to be required as part of this project's scope of work. Consultations with US Fish & Wildlife Service, California Department of Fish and Game, Section 7 Consultation and National Marine Fisheries Service (NMFS), and United States Coast Guard are also anticipated.

SW2-7. Rainy season dates are from October 1st through May 1st.

SW2-8. The hydrological climate of the region was quantified in the CT Floodplain Analysis, Floodplain Evaluation Report Summary (FERS) and Background Hydraulics Information prepared for this project on November 18, 2008. Based on the findings of that review, the project area has an annual rainfall depth of approximately 31.06 inches. The report also states that the location of the abutment of the replacement structure is in an area defined as "moderate to low flooding...". The project lies within a Zones A and C.

SW2-9. Properties of the existing soils were investigated using the U.S Department of Agriculture, Natural Resources Conservation Service's website. The Services' site provides a searchable database for multiple properties of the existing soils in a given area. Relevant properties that are available from this resource as they relate to the needs of this SWDR are hydraulic conductivity (permeability), erodibility and Hydrological Soil Group (HSG). A preliminary study shows the project transects the following 6 soil formations: Biaggi loam, Cabrillo-Heeser complex, Coastal beaches, Dystropepts, Heeser sandy loam, and urban land. hydrologic soil group (HSG), saturated hydraulic conductivity values (ksat), and soil erosion factor (Kw) are listed in the following table.

PM	Soil Name	HSG[1] Group	Saturated Hydraulic Conductivity (ksat)[3] 10^{-6} m / sec	Soil Erosion Factor (Kw)[4]	Drainage Class
42.43/42.57 42.96/43.11 43.15/43.33	Dystropepts	N / A	N / A	N / A	N / A
42.57/42.69	Flumeville clay loam	D	2.8	0.32	Poorly Drained
42.69/42.71 42.74/42.84	Mallopass loam	B	28.2	0.28	Moderately Well Drained
42.71/42.74 42.84/42.96	Biaggi loam	B	9.2	0.32	Well Drained
43.11/43.15	Cabrillo-Heeser complex	C	28.2	0.24	Somewhat Poorly Drained

1. *HSG = Hydrological Soil Group*
2. *First and Second largest classes.*
3. units are micrometers per second

Very Low	0.00 to 0.01	Low	0.01 to 0.1
Moderately Low	0.1 to 1.0	Moderately High	1 to 10
High	10 to 100	Very High	100 to 705

4. Whole Soil Erodibility Factor Ranges from 0.02 to 0.69, 0.69 being most susceptible to erosion.

Based on the records of measurement for ground water well (#16N17W27F001M), the depth to the average depth varies from about 7 feet when measurements were taken during the rainy season to about 20 feet during the dry summer months.

SW2-10. An Initial Site Assessment (ISA) was completed for this project on November 14, 2008. Based on review, a Preliminary Site Investigation (PSI) is required for this project including a structural survey of the existing bridge.

SW2-11. The total disturbed soil for this project is estimated to be within 8.8 and 11.4 acres. See table on page 3.

SW2-12. Generally, the topography of the land adjacent to the project is mostly mountainous with some rolling hillsides encroaching into the highway alignment. The existing alignment has a number of vertical profile deficiencies to do not meet design standards. As a result, the highway alignment along this project is traverses through a number of cut- and fill-slopes. The elevation range over the course is between 120 and 240 feet and the maximum slope along the centerline is about 7%. Existing cut-slopes are as steep as a 1:1 and fill-slopes as steep as 1.5:1.

SW2-13. Permanent right-of-way acquisition (fee simple) is likely for the proposed alignment, cut- and fill-slopes, and location of the proposed replacement bridge. Temporary construction easements (TCE) will likely need to be obtained for contractor equipment operation and storage. Bridge construction may utilize a temporary bridge or trestle to transport a crane across Salmon Creek for construction of the proposed replacement bridge. Encroachment permits will likely need to be acquired for work performed on county roads. The cost of obtaining these easements and permits are included in the cost estimate for the project.

SW2-14. Additional right-of-way acquisition, easements, and right-of-way entry for design, construction and maintenance BMPs is not believed to be an issue.. Right-of-way acquisition for treatment BMPs is not anticipated.

SW2-15. Right-of-way certification is required for this project and is targeted for December 1, 2013.

SW2-16. Right-of-way for this project will be required for setbacks from top of slope to right-of-way boundary. Total estimated acquisition is between 4.2 and 7.4 acres.

SW2-17. New cut- and fill-slopes are anticipated. Potential for soil erosion and water quality issues will be a concern at cut and fill locations. Estimated cut volumes range between 177,000 and 110,000 cubic yards. Estimated fill volumes range between 4,000 and 1,000 cubic yards.

SW2-18. The majority of land use within project limits is primarily pasture with a few residential parcels.

SW2-19. No dry weather flows have been identified.

SW3-1. With further information (survey, environmental, and geotechnical) the alignment may be further refined to lessen impacts to the critical areas.

SW3-2. Bridges can be designed to minimize construction impacts. All four project alternatives include arch-type structures with no piers located in the stream.

SW3-3. Many of the methods under SW-3 (3) utilized to minimize erosion from slopes can be identified at the design level.

SW3-4. The project design will consider maintenance of all BMPs.

SW3-5. Construction scheduling can be performed so that the subject storm water conveyance conduits (streams, ditches, culverts etc) have the least exposure to storm water. Such scheduling would likely include measures such as those that reduce the risk of rainfall events coinciding with high-risk construction activities.

SW3-6. Permanent storm water pollution measures such as slope grading and erosion controls can be implemented early on in the construction process. Replacement of the Salmon Creek Bridge and possible demolition of the existing bridge will likely take 3 to 5 years. Road cuts and fills can be performed and stabilized in the early stages of construction. Stabilizing these slopes early on in the project will reduce erosion risk.

3. Regional Water Quality Control Board Agreements

The North Coast Regional Water Quality Control Board approved Resolution R1-2004-0087, Total Maximum Daily Load Policy Statement for Sediment Impaired Waters in the North Coast Region on November 29, 2004. The Policy identifies existing permitting and enforcement tools, specifically Section 401 Water Quality Certifications, as methods to control sediment pollution. Additionally, the 401 Certification requires consideration of, "Proposed Storm Water Treatment Measures (Describe the methods proposed to treat storm water runoff from the project site prior to entering the storm drainage system, wetland, streams, etc. Please include proper design calculations to indicate that the proposed methods will teat runoff form the 85th perctile/24-hour storm event See SUSMP Guidelines ...)".

4. Describe Proposed Design Pollution Prevention BMPs to be used on the Project.

Downstream Effects Related to Potentially Increased Flow, Checklist DPP-1, Parts 1 and 2

Based on the increase in impervious area within the project limits, an increase in runoff volume and velocity is expected as a result of the proposed construction. Storm water runoff from the project will predominantly flow into the Salmon Creek River or into the Pacific Ocean between Biggar Rock and Whitesboro Cove.

Storm water from the project area to the south of the bridge will travel 0.2 to 0.3 miles westward toward the ocean over "poorly drained" Flumville clay loam and "somewhat poorly drained" Cabrollo-Heeser complex material. Drainage entering Salmon Creek from the south will encounter "well drained" Biaggi loam and Dystropepts material with no drainage information available. According to the Structure Preliminary Foundations Report (December, 11, 2009), "near surface soils consist of predominantly very intensely weathered to decomposed sandstone on both sides of the canyon" in the Dystropepts formation area. Storm water entering Salmon Creek and from the north will traverse across "somewhat poorly drained" Cabrollo-Heeser complex and Dystropepts material. Storm water from the project area to the north of the bridge will cross 0.1 to 0.2 miles westward toward the ocean at Whitesboro Cove over "somewhat poorly drained" Cabrollo-Heeser complex and Dystropepts material.

The flow entering Salmon Creek will experience a more measurable increase in runoff as a result of this project. These increases in local runoff rates will be divided between storm runoff traveling overland to the ocean at the south and north ends of the project and storm water flowing into the Salmon Creek channel. Such a division in storm water flow lessens the impact the project has because the increase is not concentrated to a single conveyance system.

The local impact on the existing conveyance systems can be avoided or minimized with BMPs such as erosion control materials, rock lining ditches, energy dissipaters, etc. Specific BMPs will be detailed at design stage for items on Checklist DPP-1, Part 2-5.

Slope/Surface Protection Systems, Checklist DPP-1, Parts 1 and 3

The proposed areas of cut and fill were quantified within the discussion for SW-2, 17 of this document. At the PID stage, the slopes, heights, and lengths of these areas are estimates. With further project development (i.e. PA&ED, PS&E), the specific details of these slopes will become more refined. These details would include design considerations such as rounding slopes, benches or stabilized channels, which are identified in the Slope/Surface Protection Systems section of DPP-1, Part 3.

The total increase in impervious area was quantified at 1.5 to 2.3.

Some existing vegetated surfaces along the project have been identified in the environmental document and concentrations of these surfaces can be seen on the aerial photos of the PSR. Areas of these vegetated surfaces that include sensitive habitats, if any, are identified in the Environmental Document. Revegetation of any disturbed areas, sensitive or not, will be required and will be identified at later stages of the project. Cost estimates for revegetation and erosion control are included in the Landscape Architect's estimates. Estimation of the amount of time that will be required for the disturbed areas to reestablish cover will be determined at design stage. Design of open channels will be addressed in later stages and will include features that minimize concentrated flow velocities and depths.

Concentrated Flow Conveyance Systems, Checklist DPP-1, Parts 1 and 4

HDM Topic 813-Channel and Floodplain Characteristics, Topic 836-Curbs and Gutters, and Chapter 860-Open Channels have been considered for ditches, berms, dikes, and swales. Ditches, berms, dikes and swales are expected to be features incorporated into the final design of the project. Where the installation of these elements is warranted, the specifics of the design will provide details and specifications that will address Design Pollution Prevention BMP to minimize scour, consider off-site runoff contributions, avoid overtopping, flow backups and washouts. The use of sheet flow drainage patterns should be maximized as feasible.

HDM 834.4-Overside Drains has been considered. The preliminary scope of the project calls for the installation or replacement of down drains located near the proposed replacement bridge abutments and canyon slopes. Final design will further investigate the appropriate installations of these features.

HDM Topic 827-Outlet Design has been considered for culvert outlets and inlets. Although not identified as being a feature at the PID level, flared culvert end section may be incorporated into the final design when the conditions call for such structures

HDM Topic 827-Outlet Design and Chapter 870 Channel and Shore Protection – Erosion Control have been considered for oulet protection/velocity dissipation devices. At the PID stage, the Hydraulics Unit has not identified outlet protection/velocity dissipation devices that need either repair or replacement. Further investigations are required for further structures design. Replacement bridge abutments will be designed by HQ Structures. Abutments will incorporate wingwalls as necessary. Wingwall outlets will be designed by District Hydraulics engineer. The costs associated with these modifications or replacements have been included in the estimate of the project. Work associated with these structures will reduce the degree of erosion. Final design will further investigate the appropriate installations of these features.

included in the estimate of the project. Work associated with these structures will reduce the degree of erosion. Final design will further investigate the appropriate installations of these features.

Preservation of Existing Vegetation, Checklist DPP-1, Parts 1 and 5

Although specific measures to reduce the amount of clearing and grubbing will primarily be implemented at the design stage, some preliminary practices have been considered at the PID stage of the project. Specifically, the cut and fill slopes have been minimized to reduce the amount of exposed (non-vegetated, cleared) ground surfaces.

The PID document has also identified a location within the project limits where the installation of retaining walls will be required. And although the primary purpose of these structures is to avoid a cut into private property requiring full acquisition, the construction of these walls will preserve some of the existing, vegetated hillside and reduce the surface area of a cut slope. The following table denotes where retaining walls are located:

ALTERNATIVE	LOCATION	LENGTH
1	43.51/43.54	170 FEET
2	43.63/43.72 43.51/43.54 Albion River North Side Road	490 FEET 150 FEET 345 FEET
3	43.51/43.54 Albion River North Side Road	165 FEET 345 FEET

In addition to retaining walls noted in the previous table, additional retaining walls may be incorporated into the final bridge design at the Structure embankment approach.

Specific Best Management Practices that will preserve and protect environmentally sensitive vegetated areas identified in the Preliminary Environmental Assessment Report will be examined at the design stage. These areas will be delineated on the contract plans.

5. Describe Proposed Permanent Treatment BMPs to be used on the Project

The project discharges into the Albion River which is a TMDL listed water body, and as indicated in the attached Evaluation Documentation Form, this project is required to evaluate permanent treatment BMPs. Because the project is located in an area without a local MS4 Permit, the treatment BMP consideration strategy is to evaluate Low Impact Development (LID) type treatment BMPs such as biofiltration strips/swales, earthen type BMPs and traction sand traps as outlined in Timothy Sobelman's memo dated December 16, 2008 (see Appendix F).

Given that the project will increase the impervious surface in the project area, treatment best management practices (BMPs) will be required to address pollutant loading and hydromodification. Environmental recommends that scuppers be eliminated from the bridge if at all possible, if not, the scuppers should drain to land rather than the active channel. Off site treatment could be required if treatment BMPs are not feasible on site. The need for additional Right of Way should be evaluated early during project development so that there is adequate space for incorporation of treatment BMPs. If Caltrans is unable to commit to placement of treatment BMPs during the PA/ED phase, the additional sources of polluted runoff should be identified as an impact that would require mitigation to a less than significant level. A water quality study should be prepared.

6. Describe Proposed Temporary Construction Site BMPs to be used on Project

Selection of specific Temporary Construction Site BMPs will be incorporated into the project as part of the contractor prepared Storm Water Pollution Prevention Plan (SWPPP). As such and because of the lack of project design detail at this stage, Construction Site BMPs Checklist CS-1 has not been completed for the project. However, the Construction Site BMP Consideration Form has been completed and attached to the SWDR. From the Consideration Form responses, the following construction site BMP are applicable to this project:

CONSTRUCTION SITE BMP	EXAMPLE BMP TYPE
SOIL STABILIZATION (SS)	il binders, hydroseeding, geotextiles, earth dikes
SEDIMENT CONTROL (SC)	er rolls, silt fence, gravel bag berm, sediment traps
TRACKING CONTROL (TC)	heel wash, stabilized roadway
WIND EROSION CONTROL (WE)	dro mulch, soil binders
NON-STORM WATER MANAGEMENT (NS)	mp stream crossing, clear water diversion, dewatering
WASTE MANAGEMENT & MATERIALS POLLUTION CONTROL (WM)	ncrete wash, material use, spill prevention & control

The cost for construction site BMPs has been estimated using option 1, Percentage of Total Construction Cost, as shown in Appendix F of the Storm Water Project Planning and Design Guide.

7. **Maintenance BMPs (Drain Inlet Stenciling)**

   The Salmon Creek Bridge Replacement project does not lie within communities with populations 10,000 or more, or an MS4 permit area. As such, stenciling of inlet structures would not be required as a Maintenance BMP.

REQUIRED ATTACHMENTS

⇒ **Vicinity Map**
⇒ **Evaluation Documentation Form (EDF)**
⇒ **Construction Site BMP Consideration Form**

SUPPLEMENTAL ATTACHMENTS

⇒ Checklist SW-1, Site Data Sources
⇒ Checklist SW-2, Storm Water Quality Issues Summary
⇒ Checklist SW-3, Measures for Avoiding or Reducing Potential Storm Water BMPs
⇒ Checklists DPP-1, Parts 1–5 (Design Pollution Prevention BMPs) [only those parts that are applicable]
⇒ Checklists T-1, Parts 1–10 (Treatment BMPs) [only those Parts that are applicable]

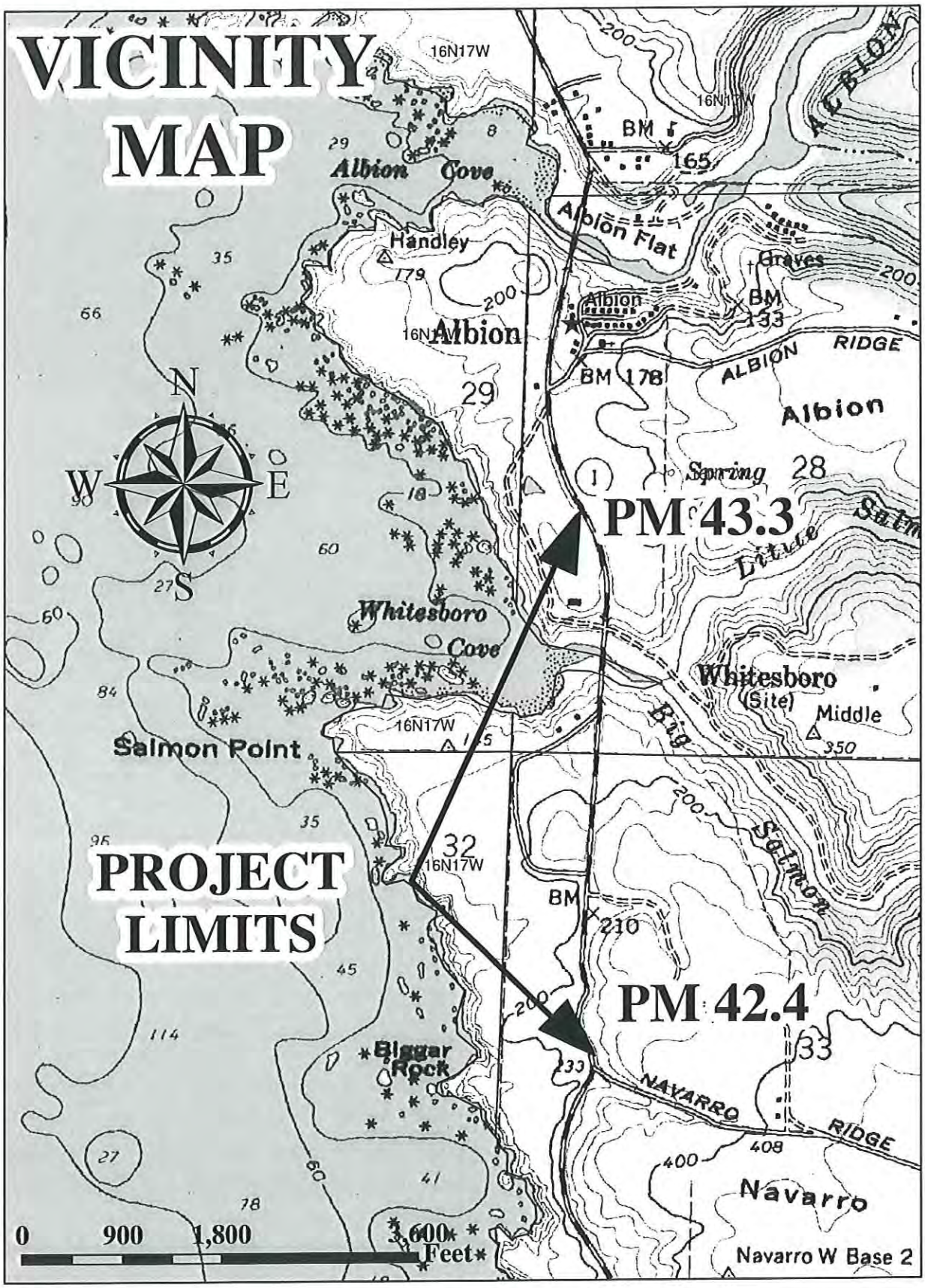
VICINITY MAP
PROJECT LIMITS
PM 43.3
PM 42.4
N
S
E
W
Albion Cove
Handley
Albion
Albion Flat
Graves
BM 165
BM 133
BM 178
ALBION RIDGE
Albion
Spring
Little
Whitesboro Cove
Whitesboro (Site)
Middle
Big
Salmon
Salmon Point
Biggar Rock
NAVARRO RIDGE
Navarro
16N17W
0 900 1,800 3,600 Feet
Navarro W Base 2

DATE: 06/10/09

See Figure 4-1, Project Evaluation Process for Consideration of Permanent Treatment BMPS EA: 01-40140K

NO.	CRITERIA	YES	NO	SUPPLEMENTAL INFORMATION FOR EVALUATION
1.	Begin Project Evaluation regarding requirement for consideration of Treatment BMPs	☒		Go to 2
2.	Is this an emergency project?	☐	☒	If **Yes**, go to 11. If **No**, continue to 3.
3.	Have TMDLs or other Pollution Control Requirements been established for surface waters within the project limits? Information provided in the water quality assessment or equivalent document.	☒	☐	If **Yes**, contact the District/Regional NPDES Coordinator to discuss the Department's obligations under the TMDL (if Applicable) or Pollution Control Requirements, go to 10 or 4. 401 AA *(Dist./Reg. SW Coordinator initials)* If **No**, continue to 4.
4.	Is the project located within an area of a local MS4 Permittee?	☐	☐	If **Yes**. (*write the MS4 Area here*), go to 5. If **No**, document in SWDR go to 5.
5.	Is the project directly or indirectly discharging to surface waters?	☐	☐	If **Yes**, continue to 6. If **No**, go to 11.
6.	Is this a new facility or major reconstruction?	☐	☐	If **Yes**, continue to 8. If **No**, go to 7.
7.	Will there be a change in line/grade or hydraulic capacity?	☐	☐	If **Yes**, continue to 8. If **No**, go to 11.
8.	Does the project result in a net increase of one acre or more of new impervious surface?	☐	☐	If **Yes**, continue to 10. If **No**, go to 9.
9.	Is the project part of a Common Plan of Development?	☐	☐	If **Yes**, continue to 10. If **No**, go to 11.
10.	Project is required to consider approved Treatment BMPs.	☒	See Sections 2.4 and either Section 5.5 or 6.5 for BMP Evaluation and Selection Process. Complete Checklist T-1 in this Appendix E.	
11.	Project is not required to consider Treatment BMPs. _____*(Dist./Reg. SW Coord. Initials)* _____*(Project Engineer Initials)* _____ *(Date)*	☐	Document for Project Files by completing this form, and attaching it to the SWDR.	

See Figure 4-1, Project Evaluation Process for Consideration of Permanent Treatment BMPs

SALMON CREEK BRIDGE REPLACEMENT PROJECT DATE: 06-08-09

Project Evaluation Process for the Consideration of Construction Site BMPs EA: 01-40140K

NO.	CRITERIA	YES	NO	SUPPLEMENTAL INFORMATION
1.	Will construction of the project result in areas of disturbed soil as defined by the Project Planning and Design Guide (PPDG)?	☒	☐	If **Yes**, Construction Site BMPs for Soil Stabilization (SS) will be required. Complete CS-1, Part 1. Continue to 2. If **No**, Continue to 3.
2.	Is there a potential for disturbed soil areas within the project to discharge to storm drain inlets, drainage ditches, areas outside the right of way, etc?	☒	☐	If **Yes**, Construction Site BMPs for Sediment Control (SC) will be required. Complete CS-1, Part 2. Continue to 3.
3.	Is there a potential for sediment or construction related materials and wastes to be tracked offsite and deposited on private or public paved roads by construction vehicles and equipment?	☒	☐	If **Yes**, Construction Site BMPs for Tracking Control (TC) will be required. Complete CS-1, Part 3. Continue to 4.
4.	Is there a potential for wind to transport soil and dust offsite during the period of construction?	☒	☐	If **Yes**, Construction Site BMPs for Wind Erosion Control (WE) will be required. Complete CS-1, Part 4. Continue to 5.
5.	Is dewatering anticipated or will construction activities occur within or adjacent to a live channel or stream?	☒	☐	If **Yes**, Construction Site BMPs for Non-Storm Water Management (NS) will be required. Complete CS-1, Part 5. Continue to 6.
6.	Will construction include saw-cutting, grinding, drilling, concrete or mortar mixing, hydro-demolition, blasting, sandblasting, painting, paving, or other activities that produce residues?	☒	☐	If **Yes**, Construction Site BMPs for Non-Storm Water Management (NS) will be required. Complete CS-1, Part 5. Continue to 7.
7.	Are stockpiles of soil, construction related materials, and/or wastes anticipated?	☒	☐	If **Yes**, Construction Site BMPs for Waste Management and Materials Pollution Control (WM) will be required. Complete CS-1, Part 6. Continue to 8.
8.	Is there a potential for construction related materials and wastes to have direct contact with precipitation; storm water run-on, or stormwater runoff; be dispersed by wind; be dumped and/or spilled into storm drain systems?	☒	☐	If **Yes**, Construction Site BMPs for Waste Management and Materials Pollution Control (WM) will be required. Complete CS-1, Part 6. Continue to 9.
9.	End of checklist.	☒	Document for Project Files by completing this form, and attaching it to the SWDR.	

PE to initialize after concurrence with Construction (PS&E only) *Date*

ATTACHMENT K

RIGHT OF WAY DATA SHEET

State of California
Department of Transportation

Business, Transportation and Housing Agency

Memorandum

Flex your power!
Be energy efficient!

To: Ilene Poindexter
Advanced Planning Branch Chief
Department of Transportation, District 3

Attention Jeffrey Pimentel
Project Engineer

Date: July 7, 2009

File: 01-MEN-01-PM 42.5/43.3
E.A. 40140k
Alternate No. 1 - Replace structure west of existing alignment
Salmon Creek Br. # 10-0134
201.110 Bridge Replacement

From: WALTER E. BIRD,
North Region Right of Way Manager
Eureka/Redding

Subject: Current Estimated Right of Way Costs

We have completed an estimate of the right of way costs for the above referenced project based on information received from you on April 15, 2009, and the following assumptions and limiting conditions.

The Greenwood Disposal Site is located nearby and will be available for an optional disposal site at $.75/ cubic yard, which is to be paid through Construction.

County encroachment permits will be required and are to be obtained through Design.

Right of Way Lead Time will require a minimum of 17 months after we receive project first appraisal maps, utility conflict maps, and the necessary environmental clearance and freeway agreements have been approved and obtained. Additionally a minimum of 14 months will be required after receiving the last appraisal map to Right of Way for certification. Shorter lead times will require either more right of way resources or an increased number of condemnation suits to be filed. Either of these actions may reflect adversely on the District's other programs or our public image generally.

WALTER E. BIRD,
North Region Right of Way Manager
Eureka/Redding

Attachments:
Right of Way Data Sheet

cc. Mike Yancheff

STATE OF CALIFORNIA - DEPARTMENT OF TRANSPORTATION

RIGHT OF WAY DATA SHEET

REVISED

Date: July 7, 2009

01-MEN-01-PM 42.5/43.3
E.A. 40140k
Salmon Creek Br. # 10-0134 201.110 Bridge Replacement

1. **Right of Way Cost Estimate:** **Alternate No. 1 - Replace structure west of existing alignment**

	Current Value Future Use	Escalation Rate	Escalated Value
A. Total Acquisition Cost	$1,227,926	5%	$1,769,893
B. Mitigation acquisition & credits	$1,980,000	5%	$2,853,907
C. Project Development Permit Fees	$9,000	5%	$12,972
Subtotal	$3,216,926		$4,636,772
D. Utility Relocation (State Share) (Owner's share: $210,000)	$0		$0
E. Relocation Assistance (RAP)	$0		$0
F. Clearance/Demolition	$0		$0
H. Title & Escrow	$800	5%	$1,153
I. Total Estimated Right of Way Cost	$3,217,726	Rounded	**$4,638,000**
J. Construction Contract Work	$0		

2. **Current Date of Right of Way Certification** January 1, 2017

3. **Parcel Data:**

Type		Dual/Appr
X	0	
A	5	
B	10	
C	0	0
D	0	0
Total	15	

Utilities	
U4 - 1	1
- 2	0
- 3	0
- 4	0
U5 - 7	2
- 8	0
- 9	1

RR Involvements	
None	X
C&M Agrmt	
Svc Contract	
Easements	
Rights of Entry	
Clauses	

Areas:

R/W:	8.75 Ac.		
Excess:	N/A	No. Excess Pcls:	0
Mitigation:	N/A		

Misc. R/W Work	
RAP Displ	N/A
Clear/Demo	N/A
Const Permits	N/A
Condemnation	0
USA Involvement	No

4. Are there any major items of construction contract work?
Yes _____ No __X__

5. Provide a general description of the right of way and excess lands required (zoning, use, major improvements, critical or sensitive parcels, etc.).

The zoning of the parcels on this route include a combination of RR & RL (160). Land uses include SFR's and vacant land.

6. Are any properties acquired for this project expected to be rented, leased, or sold?
Yes _____ No __X__

7. Is there an effect on assessed valuation? Yes _____ Not Significant _____
No __X__

8. Are utility facilities or rights of way affected? Yes __X__ No _____

14 Poles

9. Are railroad facilities or rights of way affected? Yes _____ No __X__

10. Were any previously unidentified sites with hazardous waste and/or material found?
Yes _____ None Evident __X__

11. Are RAP displacements required? Yes _____ No __X__

No. of single family _____ No. of business/nonprofit _____
No. of multi-family _____ No. of farms _____

Based on Draft/Final Relocation Impact Statement/Study dated N/A
it is anticipated that sufficient replacement housing (will/will not) be available without Last Resort Housing.

12. Are there material borrow and/or disposal sites required?
Yes __X__ No _____

The Greenwood Disposal Site is located nearby and will be available for an optional disposal site at $.75/ cubic yard, which is to be paid through Construction.

13. Are there potential relinquishments and/or abandonments?
Yes _____ No __X__

14. Are there any existing and/or potential airspace sites?
Yes _____ No **X**

15. What type of mitigation is required for the project?

Archeological, Biological, Wetland/ Riparian, & Cultural.

16. Indicate the anticipated Right of Way schedule and lead time requirements. (Discuss if district proposes less than PMCS lead time and/or if significant pressures for project advancement are anticipated.)

Right of Way Lead Time will require a minimum of 17 months after we receive first appraisal maps, utility conflict maps, and the necessary environmental clearance and freeway agreements have been approved and obtained. Additionally a minimum of 14 months will be required after receiving the last appraisal map to Right of way for certification.

17. Is it anticipated that Caltrans will perform all Right of Way work?
Yes **X** No _____

Evaluation Prepared By:

Right of Way: Brett Benson Date 7-14-09
Brett Benson

Reviewed By:

RW Project Coordinator: Audrey E. Oakley Date 7/15/09
Audrey Oakley

I have personally reviewed this Right of Way Data Sheet and all supporting information. I certify that the probable Highest and Best Use, estimated values, escalation rates, and assumptions are reasonable and proper, subject to the limiting conditions set forth, and I find this Data Sheet to be complete and current.

RECOMMENDED FOR APPROVAL

Mark C Ricards

MARK C. RICARDS,
Senior Right of Way Agent
Project Delivery Branch
Eureka

7-14-09
Date

APPROVED:

WALTER E. BIRD,
North Region Right of Way Manager
Eureka/Redding

7/22/09
Date

1. **Name of Utility Companies Requiring Verification Only:**

   PG&E
   AT&T
   Comcast

2. **Name of Utility Companies Requiring Relocations:**

   AT&T

   Number of JUA's or CCUA's required for this project:

3. **Additional information concerning utility involvements on this project:**

   14 Poles

4. **PMCS Input Information**
   Total estimated cost of State's obligation for utility relocation on this project:

Potholing: $ 0

Relocation $ 0

Total: $ 0 **Escalation Rate** 5 %.

(Owner's Share: $ 210,000)

Utility Involvements

U4-1	1	U5-7	2
-2		-8	
-3		-9	
-4			

Prepared By:

LKLovelace
Leota Lovelace
Right of Way Utility Estimator

14 Jul 09
Date

STATE OF CALIFORNIA - DEPARTMENT OF TRANSPORTATION

MITIGATION INFORMATION SHEET

E.A. 40140k

01-MEN-01-PM 42.5/43.3

1. **Is mitigation required for the project?**
   Yes per Environmental Coordinator, Denise Gibson @ (530) 741-4570.

2. **What type of mitigation is needed for the project?**
   Archeological, Biological, Wetland/ Riparian, & Cultural.

3. **List any Resource Agency that will be involved with mitigation.**

   California Department of Fish & Game
   North Coast Regional Water Quality Control Board

4. **What is the method of Mitigation?**

   Number of fee acquisition parcels, Conservation Easements, and/or Option agmts required: _____

   Mitigation Bank: (yes/no) _____

   In-lieu payment: (yes/no) _____

   Other: (describe) _____

5. **PMCS Input Information**

   Number of Acres/Credits _____

   Estimated Cost $1,980,000

   Prepared By:

   Brett Benson

   Right of Way Mitigation Estimator

State of California
Department of Transportation

Business, Transportation and Housing Agency

Memorandum

Flex your power!
Be energy efficient!

To: Ilene Poindexter
Advanced Planning Branch Chief
Department of Transportation, District 3

Attention Jeffrey Pimentel
Project Engineer

Date: July 7, 2009

File: 01-MEN-01-PM 42.5/43.3
E.A. 40140k
Alternate No. 2 - Replace structure east of existing alignment
Salmon Creek Br. # 10-0134
201.110 Bridge Replacement

From: WALTER E. BIRD,
North Region Right of Way Manager
Eureka/Redding

Subject: Current Estimated Right of Way Costs

We have completed an estimate of the right of way costs for the above referenced project based on information received from you on April 15, 2009 , and the following assumptions and limiting conditions.

The Greenwood Disposal Site is located nearby and will be available for an optional disposal site at $.75/ cubic yard, which is to be paid through Construction.

Right of Way Lead Time will require a minimum of 17 months after we receive project first appraisal maps, utility conflict maps, and the necessary environmental clearance and freeway agreements have been approved and obtained. Additionally a minimum of 14 months will be required after receiving the last appraisal map to Right of Way for certification. Shorter lead times will require either more right of way resources or an increased number of condemnation suits to be filed. Either of these actions may reflect adversely on the District's other programs or our public image generally.

WALTER E. BIRD,
North Region Right of Way Manager
Eureka/Redding

Attachments:
Right of Way Data Sheet

cc. Mike Yancheff

STATE OF CALIFORNIA - DEPARTMENT OF TRANSPORTATION

RIGHT OF WAY DATA SHEET

Date: July 7, 2009

01-MEN-01-PM 42.5/43.3
E.A. 40140k
Salmon Creek Br. # 10-0134 201.110 Bridge Replacement

1. **Right of Way Cost Estimate:** **Alternate No. 2 - Replace structure east of existing alignment**

	Current Value Future Use	Escalation Rate	Escalated Value
A. Total Acquisition Cost	$1,135,596	5%	$1,636,811
B. Mitigation acquisition & credits	$1,980,000	5%	$2,853,907
C. Project Development Permit Fees	$9,000	5%	$12,972
Subtotal	$3,124,596		$4,503,690
D. Utility Relocation (State Share) (Owner's share: $195,000)	$0		$0
E. Relocation Assistance (RAP)	$0		$0
F. Clearance/Demolition	$0		$0
H. Title & Escrow	$9,600	5%	$13,837
I. Total Estimated Right of Way Cost	$3,134,196	Rounded	**$4,518,000**
J. Construction Contract Work	$0		

2. **Current Date of Right of Way Certification** January 1, 2017

3. **Parcel Data:**

Type		Dual/Appr	Utilities		RR Involvements	
X	0		U4 - 1	1	None	X
A	3		- 2	0	C&M Agrmt	
B	9		- 3	0	Svc Contract	
C	0	0	- 4	0	Easements	
D	0	0	U5 - 7	2	Rights of Entry	
			- 8	0	Clauses	
Total	12		- 9	1		

Areas:

				Misc. R/W Work	
R/W:	11.5 Ac.			RAP Displ	N/A
Excess:	N/A	No. Excess Pcls:	0	Clear/Demo	N/A
Mitigation:	N/A			Const Permits	N/A
				Condemnation	0
				USA Involvement	No

4. Are there any major items of construction contract work?
Yes _____ No X

5. Provide a general description of the right of way and excess lands required (zoning, use, major improvements, critical or sensitive parcels, etc.).

The zoning of the parcels on this route include a combination of RR & RL (160). Land uses include SFR's and vacant land.

6. Are any properties acquired for this project expected to be rented, leased, or sold?
Yes _____ No X

7. Is there an effect on assessed valuation? Yes _____ Not Significant _____
No X

8. Are utility facilities or rights of way affected? Yes X No _____

13 Poles

9. Are railroad facilities or rights of way affected? Yes _____ No X

10. Were any previously unidentified sites with hazardous waste and/or material found?
Yes _____ None Evident X

11. Are RAP displacements required? Yes _____ No X

No. of single family _____ No. of business/nonprofit _____
No. of multi-family _____ No. of farms _____

Based on Draft/Final Relocation Impact Statement/Study dated N/A
it is anticipated that sufficient replacement housing (will/will not) be available without Last Resort Housing.

12. Are there material borrow and/or disposal sites required?
Yes X No _____

The Greenwood Disposal Site is located nearby and will be available for an optional disposal site at $.75/ cubic yard, which is to be paid through Construction.

13. Are there potential relinquishments and/or abandonments?
Yes _____ No X

14. Are there any existing and/or potential airspace sites?
Yes _____ No **X**

15. What type of mitigation is required for the project?

Archeological, Biological, Wetland/ Riparian, & Cultural.

16. Indicate the anticipated Right of Way schedule and lead time requirements. (Discuss if district proposes less than PMCS lead time and/or if significant pressures for project advancement are anticipated.)

Right of Way Lead Time will require a minimum of 17 months after we receive first appraisal maps, utility conflict maps, and the necessary environmental clearance and freeway agreements have been approved and obtained. Additionally a minimum of 14 months will be required after receiving the last appraisal map to Right of way for certification.

17. Is it anticipated that Caltrans will perform all Right of Way work?
Yes **X** No _____

Evaluation Prepared By:

Right of Way: Brett Benson Date 7-14-09
Brett Benson

Reviewed By:

RW Project Coordinator: Audrey E. Oakley Date 7/15/09
Audrey Oakley

I have personally reviewed this Right of Way Data Sheet and all supporting information. I certify that the probable Highest and Best Use, estimated values, escalation rates, and assumptions are reasonable and proper, subject to the limiting conditions set forth, and I find this Data Sheet to be complete and current.

RECOMMENDED FOR APPROVAL

Mark C. Ricards
MARK C. RICARDS,
Senior Right of Way Agent
Project Delivery Branch
Eureka

7-14-09
Date

APPROVED:

WALTER E. BIRD,
North Region Right of Way Manager
Eureka/Redding

7/22/09
Date

1. **Name of Utility Companies Requiring Verification Only:**

   PG&E
   AT&T
   Comcast

2. **Name of Utility Companies Requiring Relocations:**

   AT&T

   Number of JUA's or CCUA's required for this project:

3. **Additional information concerning utility involvements on this project:**

   13 Poles

4. **PMCS Input Information**
   Total estimated cost of State's obligation for utility relocation on this project:

Potholing: $ 0

Relocation $ 0

Total: $ 0 **Escalation Rate** 5 **%.**

(Owner's Share: $ 195,000)

Utility Involvements

U4-1	1	**U5-7**	2
-2		**-8**	
-3		**-9**	
-4			

Prepared By:

LKLovelace

Leota Lovelace
Right of Way Utility Estimator

14 Jul 09
Date

STATE OF CALIFORNIA - DEPARTMENT OF TRANSPORTATION

MITIGATION INFORMATION SHEET

E.A. 40140k

01-MEN-01-PM 42.5/43.3

1. **Is mitigation required for the project?**
   Yes per Environmental Coordinator, Denise Gibson @ (530) 741-4570.

2. **What type of mitigation is needed for the project?**
   Archeological, Biological, Wetland/ Riparian, & Cultural.

3. **List any Resource Agency that will be involved with mitigation.**

   California Department of Fish & Game
   North Coast Regional Water Quality Control Board

4. **What is the method of Mitigation?**

   Number of fee acquisition parcels, Conservation Easements, and/or Option agmts required: _____

   Mitigation Bank: (yes/no) _____

   In-lieu payment: (yes/no) _____

   Other: (describe) _____

5. **PMCS Input Information**

   Number of Acres/Credits _____

   Estimated Cost $1,980,000

   Prepared By:

   Brett Benson

   Right of Way Mitigation Estimator

State of California
Department of Transportation

Business, Transportation and Housing Agency

Memorandum

Flex your power!
Be energy efficient!

To: Ilene Poindexter
Advanced Planning Branch Chief
Department of Transportation, District 3

Attention Jeffrey Pimentel
Project Engineer

Date: July 7, 2009

File: 01-MEN-01-PM 42.5/43.3
E.A. 40140k
Alternate No. 3 - Replace structure west of existing alignment in stages
Salmon Creek Br. # 10-0134
201.110 Bridge Replacement

From: WALTER E. BIRD,
North Region Right of Way Manager
Eureka/Redding

Subject: Current Estimated Right of Way Costs

We have completed an estimate of the right of way costs for the above referenced project based on information received from you on April 15, 2009 , and the following assumptions and limiting conditions.

The Greenwood Disposal Site is located nearby and will be available for an optional disposal site at $.75/ cubic yard, which is to be paid through Construction.

County encroachment permits will be required and are to be obtained through Design.

Right of Way Lead Time will require a minimum of 17 months after we receive project first appraisal maps, utility conflict maps, and the necessary environmental clearance and freeway agreements have been approved and obtained. Additionally a minimum of 14 months will be required after receiving the last appraisal map to Right of Way for certification. Shorter lead times will require either more right of way resources or an increased number of condemnation suits to be filed. Either of these actions may reflect adversely on the District's other programs or our public image generally.

WALTER E. BIRD,
North Region Right of Way Manager
Eureka/Redding

Attachments:
Right of Way Data Sheet

cc. Mike Yancheff

STATE OF CALIFORNIA - DEPARTMENT OF TRANSPORTATION

RIGHT OF WAY DATA SHEET

REVISED

Date: July 7, 2009

01-MEN-01-PM 42.5/43.3
E.A. 40140k
Salmon Creek Br. # 10-0134 201.110 Bridge Replacement

1. **Right of Way Cost Estimate:** **Alternate No. 3 - Replace structure west of existing alignment in stages**

	Current Value Future Use	Escalation Rate		Escalated Value
A. Total Acquisition Cost	$1,237,136	5%		$1,783,168
B. Mitigation acquisition & credits	$1,980,000	5%		$2,853,907
C. Project Development Permit Fees	$9,000	5%		$12,972
Subtotal	$3,226,136			$4,650,047
D. Utility Relocation (State Share) (Owner's share: $240,000)	$0			$0
E. Relocation Assistance (RAP)	$0			$0
F. Clearance/Demolition	$0			$0
H. Title & Escrow	$12,800	5%		$18,449
I. Total Estimated Right of Way Cost	$3,238,936		Rounded	**$4,668,000**
J. Construction Contract Work	$0			

2. **Current Date of Right of Way Certification** January 1, 2017

3. **Parcel Data:**

Type		Dual/Appr	Utilities		RR Involvements	
X	0		U4 - 1	1	None	X
A	2		- 2	0	C&M Agrmt	
B	15		- 3	0	Svc Contract	
C	0	0	- 4	0	Easements	
D	0	0	U5 - 7	2	Rights of Entry	
			- 8	0	Clauses	
Total	17		- 9	1		

Areas:

				Misc. R/W Work	
R/W:	9.47 Ac.			RAP Displ	N/A
Excess:	N/A	No. Excess Pcls:	0	Clear/Demo	N/A
Mitigation:	N/A			Const Permits	N/A
				Condemnation	0
				USA Involvement	No

4. Are there any major items of construction contract work?
Yes _____ No __X__

5. Provide a general description of the right of way and excess lands required (zoning, use, major improvements, critical or sensitive parcels, etc.).

The zoning of the parcels on this route include a combination of RR & RL (160). Land uses include SFR's and vacant land.

6. Are any properties acquired for this project expected to be rented, leased, or sold?
Yes _____ No __X__

7. Is there an effect on assessed valuation? Yes _____ Not Significant _____
No __X__

8. Are utility facilities or rights of way affected? Yes __X__ No _____

16 Poles

9. Are railroad facilities or rights of way affected? Yes _____ No __X__

10. Were any previously unidentified sites with hazardous waste and/or material found?
Yes _____ None Evident __X__

11. Are RAP displacements required? Yes _____ No __X__

No. of single family _____ No. of business/nonprofit _____
No. of multi-family _____ No. of farms _____

Based on Draft/Final Relocation Impact Statement/Study dated N/A
it is anticipated that sufficient replacement housing (will/will not) be available without Last Resort Housing.

12. Are there material borrow and/or disposal sites required?
Yes __X__ No _____

The Greenwood Disposal Site is located nearby and will be available for an optional disposal site at $.75/ cubic yard, which is to be paid through Construction.

13. Are there potential relinquishments and/or abandonments?
Yes _____ No __X__

14. Are there any existing and/or potential airspace sites?
Yes _____ No **X**

15. What type of mitigation is required for the project?

Archeological, Biological, Wetland/ Riparian, & Cultural.

16. Indicate the anticipated Right of Way schedule and lead time requirements. (Discuss if district proposes less than PMCS lead time and/or if significant pressures for project advancement are anticipated.)

Right of Way Lead Time will require a minimum of 17 months after we receive first appraisal maps, utility conflict maps, and the necessary environmental clearance and freeway agreements have been approved and obtained. Additionally a minimum of 14 months will be required after receiving the last appraisal map to Right of way for certification.

17. Is it anticipated that Caltrans will perform all Right of Way work?
Yes **X** No _____

Evaluation Prepared By:

Right of Way: Brett Benson Date 7-14-09
Brett Benson

Reviewed By:

RW Project Coordinator: Audrey E. Oakley Date 7/15/09
Audrey Oakley

I have personally reviewed this Right of Way Data Sheet and all supporting information. I certify that the probable Highest and Best Use, estimated values, escalation rates, and assumptions are reasonable and proper, subject to the limiting conditions set forth, and I find this Data Sheet to be complete and current.

RECOMMENDED FOR APPROVAL

Mark C. Ricards
MARK C. RICARDS,
Senior Right of Way Agent
Project Delivery Branch
Eureka

7-14-09
Date

APPROVED:

WALTER E. BIRD,
North Region Right of Way Manager
Eureka/Redding

7/22/09
Date

1. **Name of Utility Companies Requiring Verification Only:**

   PG&E
   AT&T
   Comcast

2. **Name of Utility Companies Requiring Relocations:**

   AT&T

   Number of JUA's or CCUA's required for this project:

3. **Additional information concerning utility involvements on this project:**

   16 Poles

4. **PMCS Input Information**
   Total estimated cost of State's obligation for utility relocation on this project:

Potholing: $ 0

Relocation $ 0

Total: $ 0 **Escalation Rate** 5 %.

(Owner's Share: $ 240,000)

Utility Involvements

U4-1	1	**U5-7**	2
-2		**-8**	
-3		**-9**	
-4			

Prepared By:

Leota K. Lovelace

Leota Lovelace
Right of Way Utility Estimator

14 Jul 09
Date

STATE OF CALIFORNIA - DEPARTMENT OF TRANSPORTATION

MITIGATION INFORMATION SHEET

E.A. 40140k

01-MEN-01-PM 42.5/43.3

1. **Is mitigation required for the project?**
   Yes per Environmental Coordinator, Denise Gibson @ (530) 741-4570.

2. **What type of mitigation is needed for the project?**
   Archeological, Biological, Wetland/ Riparian, & Cultural.

3. **List any Resource Agency that will be involved with mitigation.**

   California Department of Fish & Game
   North Coast Regional Water Quality Control Board

4. **What is the method of Mitigation?**

   Number of fee acquisition parcels, Conservation Easements, and/or Option agmts required: _____

   Mitigation Bank: (yes/no) _____

   In-lieu payment: (yes/no) _____

   Other: (describe) _____

5. **PMCS Input Information**

   Number of Acres/Credits _____

   Estimated Cost $1,980,000

   Prepared By:

   Brett Benson

   Right of Way Mitigation Estimator

State of California
Department of Transportation

Business, Transportation and Housing Agency

Memorandum

Flex your power!
Be energy efficient!

To: Ilene Poindexter
Advanced Planning Branch Chief
Department of Transportation, District 3

Attention Jeffrey Pimentel
Project Engineer

Date: July 7, 2009

File: 01-MEN-01-PM 42.5/43.3
E.A. 40140k
Alternate No. 4 - Replace structure east of existing alignment in stages
Salmon Creek Br. # 10-0134
201.110 Bridge Replacement

From: WALTER E. BIRD,
North Region Right of Way Manager
Eureka/Redding

Subject: Current Estimated Right of Way Costs

We have completed an estimate of the right of way costs for the above referenced project based on information received from you on April 15, 2009 , and the following assumptions and limiting conditions.

The Greenwood Disposal Site is located nearby and will be available for an optional disposal site at $.75/ cubic yard, which is to be paid through Construction.

County encroachment permits will be required and are to be obtained through Design.

Right of Way Lead Time will require a minimum of 17 months after we receive project first appraisal maps, utility conflict maps, and the necessary environmental clearance and freeway agreements have been approved and obtained. Additionally a minimum of 14 months will be required after receiving the last appraisal map to Right of Way for certification. Shorter lead times will require either more right of way resources or an increased number of condemnation suits to be filed. Either of these actions may reflect adversely on the District's other programs or our public image generally.

WALTER E. BIRD,
North Region Right of Way Manager
Eureka/Redding

Attachments:
Right of Way Data Sheet

cc. Mike Yancheff

STATE OF CALIFORNIA - DEPARTMENT OF TRANSPORTATION

RIGHT OF WAY DATA SHEET

Date: July 7, 2009

01-MEN-01-PM 42.5/43.3
E.A. 40140k
Salmon Creek Br. # 10-0134 201.110 Bridge Replacement

1. **Right of Way Cost Estimate:** **Alternate No. 4 - Replace structure east of existing alignment in stages**

	Current Value Future Use	Escalation Rate	Escalated Value
A. Total Acquisition Cost	$967,708	5%	$1,394,822
B. Mitigation acquisition & credits	$1,980,000	5%	$2,853,907
C. Project Development Permit Fees	$9,000	5%	$12,972
Subtotal	$2,956,708		$4,261,701
D. Utility Relocation (State Share) (Owner's share: $210,000)	$0		$0
E. Relocation Assistance (RAP)	$0		$0
F. Clearance/Demolition	$0		$0
H. Title & Escrow	$12,000	5%	$17,296
I. Total Estimated Right of Way Cost	$2,968,708	Rounded	**$4,279,000**
J. Construction Contract Work	$0		

2. **Current Date of Right of Way Certification** January 1, 2017

3. **Parcel Data:**

Type		Dual/Appr	Utilities		RR Involvements	
X	0		U4 - 1	1	None	X
A	6		- 2	0	C&M Agrmt	
B	10		- 3	0	Svc Contract	
C	0	0	- 4	0	Easements	
D	0	0	U5 - 7	2	Rights of Entry	
			- 8	0	Clauses	
Total	16		- 9	1		

Areas:

R/W:	10.34 Ac.		
Excess:	N/A	No. Excess Pcls:	0
Mitigation:	N/A		

Misc. R/W Work

RAP Displ	N/A
Clear/Demo	N/A
Const Permits	N/A
Condemnation	0
USA Involvement	No

4. Are there any major items of construction contract work?
Yes _____ No __X__

5. Provide a general description of the right of way and excess lands required (zoning, use, major improvements, critical or sensitive parcels, etc.).

The zoning of the parcels on this route include a combination of RR & RL (160). Land uses include SFR's and vacant land.

6. Are any properties acquired for this project expected to be rented, leased, or sold?
Yes _____ No __X__

7. Is there an effect on assessed valuation? Yes _____ Not Significant _____
No __X__

8. Are utility facilities or rights of way affected? Yes __X__ No _____

14 Poles

9. Are railroad facilities or rights of way affected? Yes _____ No __X__

10. Were any previously unidentified sites with hazardous waste and/or material found?
Yes _____ None Evident __X__

11. Are RAP displacements required? Yes _____ No __X__

No. of single family _____ No. of business/nonprofit _____
No. of multi-family _____ No. of farms _____

Based on Draft/Final Relocation Impact Statement/Study dated N/A
it is anticipated that sufficient replacement housing (will/will not) be available without Last Resort Housing.

12. Are there material borrow and/or disposal sites required?
Yes __X__ No _____

The Greenwood Disposal Site is located nearby and will be available for an optional disposal site at $.75/ cubic yard, which is to be paid through Construction.

13. Are there potential relinquishments and/or abandonments?
Yes _____ No __X__

14. Are there any existing and/or potential airspace sites?
Yes _____ No __X__

15. What type of mitigation is required for the project?

Archeological, Biological, Wetland/ Riparian, & Cultural.

16. Indicate the anticipated Right of Way schedule and lead time requirements. (Discuss if district proposes less than PMCS lead time and/or if significant pressures for project advancement are anticipated.)

Right of Way Lead Time will require a minimum of 17 months after we receive first appraisal maps, utility conflict maps, and the necessary environmental clearance and freeway agreements have been approved and obtained. Additionally a minimum of 14 months will be required after receiving the last appraisal map to Right of way for certification.

17. Is it anticipated that Caltrans will perform all Right of Way work?
Yes __X__ No _____

Evaluation Prepared By:

Right of Way: Brett Benson Date 7-14-09
Brett Benson

Reviewed By:

RW Project Coordinator: Audrey E. Oakley Date 7/15/09
Audrey Oakley

I have personally reviewed this Right of Way Data Sheet and all supporting information. I certify that the probable Highest and Best Use, estimated values, escalation rates, and assumptions are reasonable and proper, subject to the limiting conditions set forth, and I find this Data Sheet to be complete and current.

RECOMMENDED FOR APPROVAL

Mark C Ricards
MARK C. RICARDS,
Senior Right of Way Agent
Project Delivery Branch
Eureka

7-14-09
Date

APPROVED:

WALTER E. BIRD,
North Region Right of Way Manager
Eureka/Redding

7/22/09
Date

1. **Name of Utility Companies Requiring Verification Only:**

   PG&E
   AT&T
   Comcast

2. **Name of Utility Companies Requiring Relocations:**

   AT&T

   Number of JUA's or CCUA's required for this project:

3. **Additional information concerning utility involvements on this project:**

   14 Poles

4. **PMCS Input Information**
   Total estimated cost of State's obligation for utility relocation on this project:

Potholing: $ 0

Relocation $ 0

Total: $ 0 **Escalation Rate** 5 %.

(Owner's Share: $ 210,000)

Utility Involvements

U4-1	1	**U5-7**	2
-2		**-8**	
-3		**-9**	
-4			

Prepared By:

LKLovelace

Leota Lovelace
Right of Way Utility Estimator

14 Jun 09
Date

STATE OF CALIFORNIA - DEPARTMENT OF TRANSPORTATION

MITIGATION INFORMATION SHEET

E.A. 40140k

01-MEN-01-PM 42.5/43.3

1. **Is mitigation required for the project?**
   Yes per Environmental Coordinator, Karen Thomas @ (916) 274-0568.

2. **What type of mitigation is needed for the project?**
   Archeological, Biological, Wetland/ Riparian, & Cultural.

3. **List any Resource Agency that will be involved with mitigation.**

   California Department of Fish & Game
   North Coast Regional Water Quality Control Board

4. **What is the method of Mitigation?**

   Number of fee acquisition parcels, Conservation Easements, and/or Option agmts required: _____

   Mitigation Bank: (yes/no) _____

   In-lieu payment: (yes/no) _____

   Other: (describe) _____

5. **PMCS Input Information**

   Number of Acres/Credits _____

   Estimated Cost $1,980,000

   Prepared By:

   Brett Benson

   Right of Way Mitigation Estimator

ATTACHMENT L

TRANSPORTATION MANAGEMENT PLAN
(TMP)

TRANSPORTATION MANAGEMENT PLAN
UPDATE # 1

To: Johnathon Jackson
Transportation Engineer

Date: 3 April 2009
File: MEN-1 PM 42.5/43.3
EA: 01-40140K
Bridge replacement.

From: Troy Arseneau, Chief
District 1 Office of Traffic Operations

Project Information

Location:	In Mendocino County near Albion from Salmon Creek Bridge #10-134 to 0.1 miles north of Salmon Creek Bridge #10-134.	
Type of Work:	Replace existing structure with realignment of the approaching highway. Shoulder widening, construct new structural sections, installation and modification of culverts and ditches, and earthwork.	
Anticipated Traffic Control:	One-way reversible traffic control. Shoulder closure.	
Estimated Maximum Delay:	5 minutes.	
Peak Hour Traffic Volumes:	500 vph (2014 Projection).	
Lane Requirement Charts Included:	Yes.	
Number of Working Days:	TBD.	
Next Major Milestone and Date:	PSR - March/2009	
RTL Date:	December/2013	
District Traffic Manager/ TMP Manager:	Troy Arseneau	(707) 445-6377
TMP Coordinator:	Paul Hailey	(707) 445-5213

Anticipated Traffic Impacts

Significant traffic impacts are not anticipated provided that the following recommendations are incorporated into the project. In conformance with Deputy Directive-60, District Lane Closure Review Committee approval is not required for projects with anticipated traffic delay less than 30 minutes.

Recommendation

A request for an updated Transportation Management Plan shall be made during the design phase once the preferred selection from the four alternatives under consideration has been determined.

Hours of Work

- See attached Lane Requirements Chart No. 1.

Public Notice

- Upon receipt of notice that the roadway width (including paved shoulder) for a direction of travel will be narrowed to less than 14 ft, the Resident Engineer shall promptly notify the District Permits Engineer.

- The District Public Information Office, (707) 445-6444, shall be contacted two weeks in advance of the start of construction.

- Any emergency service agency whose ability to respond to incidents will be affected by any lane closure must be notified prior to that closure. Because the Salmon Creek Bridge is the only access over the Salmon Creek, emergency vehicle access should be a primary consideration in all temporary closures or traffic controls. All emergency vehicles shall be accommodated and given priority during emergency response situations. Table 1 lists the main emergency contacts

- Work shall be coordinated with the local busing system (including school buses and public systems) to minimize impact on their bus schedules.

- The Resident Engineer shall provide information to residents and businesses before and during project work that may represent a negative impact on commerce and travel surrounding the zone of construction.

- Include in a memo to the Resident Engineer that at least 5 days in advance of excavation work in the vicinity of possible Caltrans facilities, that Maintenance-Electrical Supervisor (825-0233) shall be contacted to locate existing Caltrans underground electrical facilities.

Table 1: Emergency Contacts

Agency	Address	Phone No.
Mendocino Coast District Hospital	700 River Drive Fort Bragg, Ca 95437	(707)-961-1234
CA Dept. of Forestry	802 N. Main Fort Bragg, Ca 95437	(707)-964-5673
Mendocino County Sheriff's Department	700 S. Franklin St. Fort Bragg, Ca 95437	(707)-964-6308

Traffic Control - General

- One closure is permitted within the project limits.
- A shoulder closure consisting of at least one Shoulder Work Ahead advance warning sign and channelizing devices shall be used when work occurs within 6 ft of the edge of traveled way. Channelizing devices shall be placed 200 ft in advance of, and adjacent to the work zone with a maximum distance of 50 ft between channelizers.

Traffic Control – Roadway Tie-In

- A shoulder closure consisting of at least one Shoulder Work Ahead advance warning sign and channelizing devices shall be used when work occurs within 6 ft of the edge of traveled way. Channelizing devices shall be placed 200 ft in advance of, and adjacent to the work zone with a maximum distance of 50 ft between channelizers.
- One-way traffic control shall be in conformance with the Caltrans Standard Plan T-13, "TRAFFIC CONTROL SYSTEM FOR LANE CLOSURE ON TWO LANE CONVENTIONAL HIGHWAYS."
  - A minimum of 14 ft of paved roadway shall be open for use by public traffic.
  - In the event the design calls for the roadway to be reduced to less than 14 feet of paved width, a memo requesting an updated TMP with the reasoning for the change of the lane width restriction shall be submitted to District 1 Traffic Operations.
  - The maximum length of one-way traffic control closure is 1,700 ft.
  - During one-way traffic control, additional advance flaggers will be required. All flaggers shall have continuous radio contact with personnel in the work area.

- "Watch for Bicycles" signs shall be placed, in each direction of travel, prior to the construction zone.

- A minimum of one PCMS in advance of both ends of the construction site shall be required in order to notify the public of the closures related to this project.

- Access to side roads and residences shall be maintained at all times. When work or traffic queues extend through an intersection, additional traffic control will be required at the intersection.

- This section of Highway 1 is part of the Pacific Coast Bike Route. Bicycles shall be accommodated through the work zone.

- If persons with disabilities (e.g. hearing, visual, or mobility) are found to use this facility, the temporary traffic control measures mentioned in the California MUTCD Chapter 6D shall be incorporated to accommodate disabled pedestrians through the work zone.

- COZEEP is recommended for this project based on risk factors associated with this project and the COZEEP Guidelines (CA DOT Construction Manual Section 2-215A). The associated risk factors include: lane closure with one-way traffic control, workers exposed to traffic, end of queue management, and speed management.

- The following project is anticipated to have closures near this project and shall be used to assess cumulative corridor delay: *01-40110.*

Contingency Plan

The contractor shall prepare a contingency plan for reopening closures to public traffic. The Contractor shall submit the contingency plan for a given operation to the Engineer within one working day of the Engineer's request. Contingencies for unanticipated delays, emergencies, etc. shall be coordinated between the RE and the Contractor.

Approval

Approved by: _____
Transportation Management Plan Coordinator

Approved by: _____
District Traffic/ TMP Manager

TAA/cwk

CC: 1)TAArseneau, 2)JCandalot
1)RMMartinelli, 2) JJZimmerer, 3)MGDavenport
IDPoindexter
JPimental
MLYancheff
HLQuintrell
RLingford
AJones

Chart No. 1
Lane Requirements

County: Mendocino | Route: 1 | PM: 42.5/43.3

FROM HOUR TO HOUR	24	1	2	3	4	5	6	7	8	9	10	11	12	13	14	15	16	17	18	19	20	21	22	23	24
Mondays through Thursdays	1	1	1	1	1	1	1	1	1	1	1	1	1	1	1	1	1	1	1	1	1	1	1	1	
Fridays	1	1	1	1	1	1	1	1	1	1	1	1	1	1	1										
Saturdays																									
Sundays																					1	1	1	1	
Day before designated legal holiday																									
Designated legal holidays																									

Legend:

1	A minimum of 16 ft of paved roadway shall be open for use by public traffic. The maximum lane closure length is 1,700 ft.
	No closures allowed.

- The full width of the traveled way shall be open for use by public traffic when construction operations are not actively in progress.
- If a legal holiday falls on a Monday, the full width of the traveled way shall be open on the preceding Friday.
- No work shall take place on the day preceding a 3-day weekend.

ATTACHMENT M

PRELIMINARY ENVIRONMENTAL
ASSESSMENT REPORT (PEAR)

Preliminary Environmental Analysis Report (PEAR)

Salmon Creek Bridge (#10-0134) Replacement Project

01-MEN-1 PM 42.5-43.3

01-40140K

April 2009

Prepared By: Denise Gibson, Associate Environmental Planner, Coordinator
Office of Environmental Management, M3
530-741-4570

For individuals with sensory disabilities, this document can be made in Braille, large print, on audiocassette, or computer disk. To obtain a copy in one of these alternate formats, please call or write to Caltrans, Attn: Kendall Schinke, Office of Environmental Management M3, 703 B Street, Marysville, CA 95901; 530-741-4591 (Voice) or use the California Relay Service TTY number, 530-741-4509.

DEPARTMENT OF TRANSPORTATION UNITED STATES OF AMERICA

Caltrans

PRELIMINARY ENVIRONMENTAL ANALYSIS REPORT

1. Project Information

District	County	Route	PM	EA
1	MEN	1	42.5/43.3	01-40140K
Project Title: Salmon Creek Bridge Replacement				
Project Manager Mike Yancheff			Phone # (707) 441-2097	
Project Engineer Johnathon Jackson			Phone # (707) 441-2059	
Environmental Office Chief/Manager Kendall Schinke			Phone # (530) 741-4591	
PEAR Preparer Denise Gibson			Phone # (530) 741-4570	

2. Project Description

Purpose and Need

This project was initiated because the Office of Structures Maintenance and Investigations and the Structure Replacement and Improvement Needs (STRAIN) Report (dated 08/08) has identified the Salmon Creek Bridge, as a structurally deficient and functionally obsolete bridge with a sufficiency rating of 49.70 percent. The Salmon Creek Bridge and the approaching alignment have a number of structural and geometric deficiencies.

The purpose of this project is to replace this functionally obsolete and structurally deficient structure with a structure that will improve geometrics and structural integrity to ensure uninterrupted traffic movements in the event of a vehicular breakdown, seismic event, or other catastrophic failure. There is no interim retrofit work that can reduce the geometric and structural deficiencies of the existing structure.

Description of work

Advance Planning is preparing a Project Study Report (PSR) for the Salmon Creek Bridge Replacement Project. The Salmon Creek Bridge is located in Mendocino County, from PM 43.00 to PM 43.13, near the town of Albion, 2.7 miles north of the Route128 junction. This project proposes to replace the existing structure (32-foot width by 685-foot length) with realignment of the approaching highway.

The structure is fracture critical due to a lack of redundancy of the steel truss deck members and is designated as structurally deficient due to the condition of the deck. The structure currently requires painting every 4 to 5 years at a cost of $2,500,000, and was

last painted in 2004/2005. The paint coat is already starting to corrode at numerous lateral brace, floor beam, and gusset plate locations.
The horizontal beam on the left side of tower 3-4 has severe section loss, and various members throughout both trusses have minor section loss. The structure currently requires spot preparation and painting at a cost of $100,000. The Peer Review Fact Sheet (dated 08/15/07) recommends stripping the existing coat to allow for fracture critical inspection. The existing rail has been recommended for replacement because it currently does not meet standards. To eliminate potential seismic vulnerability, strengthening of the steel truss members will need to be performed at a cost $1,018,000. There are several work recommendations to repair spalls and delaminations in the deck and substructure at a cost of $86,000. The life cycle economic cost of maintenance ($ 5.2 million) does not compare favorably with the cost of replacement ($35 million) with a structure type better suited to the environment.The Salmon Creek Bridge is on the STRAIN Report as "Functionally Obsolete" due to a non-standard deck width.

Alternatives
The following alternatives are being evaluated to replace the Salmon Creek Bridge. All proposed replacement structures consist of two 12-foot travel lanes, two 8-foot shoulders, and one 5-foot pedestrian walkway with barrier on the west side of the structure. The proposed roadway cross-section for all alternatives include two 12-foot lanes and 4-foot shoulders, as specified by the *Route Concept Report* for this segment of highway.

Alternative 1
This alignment is located on the west side of the existing Salmon Creek Bridge. The replacement structure is 800 feet long, 130 to 160 feet high, and is located on a 1,000-foot vertical sag curve. This alternative will likely allow two traffic lanes to remain open during most of the construction. To the south of the existing structure, Nonella Lane and Navarro Ridge Road will be minimally affected by the realignment of the roadway with incorporation of a proposed 10,000-foot horizontal curve at PM 42.54. Pacific Reefs Road will also be minimally affected by the realignment.

Alternative 2
This alternative is located on the east side of the existing Salmon Creek Bridge. The replacement structure is 700 feet long, 130 to 160 feet high, and is located on a 1,000-foot vertical sag curve. This alternative will likely allow two traffic lanes to remain open during most of the construction. To the south of the existing structure, Nonella Lane and Navarro Ridge Road will be minimally affected by the realignment of the roadway with incorporation of a proposed 6,000-foot horizontal curve at PM 42.54. Pacific Reefs Road will also be minimally affected by the realignment.

Alternative 3
This alternative is located on the west side of the existing Salmon Creek Bridge. The proposed replacement structure will be constructed in stages. The replacement structure is 685 feet long, 130 to 160 feet high, and is located on a 1,000-foot vertical sag curve. This alternative will likely require one-way reversible traffic for the second stage of construction. The proposed centerline for the third alternative is 17 feet offset left (west)

and parallels the existing alignment. To the south of the existing structure, Nonella Lane and Navarro Ridge Road will be minimally affected by the realignment of the roadway with incorporation of a proposed 10,000-foot horizontal curve at PM 42.54. Pacific Reefs Road will also be minimally affected by the realignment.

Alternative 4

This alternative is located on the east side of the existing Salmon Creek Bridge. The proposed replacement structure will be constructed in stages. The replacement structure is 685 feet long, 130 to 160 feet high, and is located on a 1,000-foot vertical sag curve. This alternative will likely require one-way reversible traffic for the second stage of construction. The proposed centerline for the fourth alternative is 23 feet offset right (east) and parallels the existing alignment.

To the south of the existing structure, Nonella Lane and Navarro Ridge Road will be minimally affected by the realignment of the roadway with incorporation of a proposed 10,000-foot horizontal curve at PM 42.54. Pacific Reefs Road will also be minimally affected by the realignment. The proposed roadway cross-section includes two 12-foot lanes and 4-foot paved shoulders as specified by the Route Concept Report for this segment of highway. The proposed structure cross-section is two 12-foot lanes, 8-foot shoulders, and one 5-foot pedestrian walkway on the west side of the bridge separated from traffic with a barrier.

The proposed horizontal alignment of the structure is located on a tangent and spans roughly 600 to 750 feet across Salmon Creek. Alternatives incorporate shoulder widening, new structural sections, retaining walls, and installation and modification of culverts and ditches. Proposed culvert and drainage work includes the following: new pipe culvert placement, pipe culvert relocation and modification, drainage ditch modification to accommodate proposed alignment, and earthwork.

3. Anticipated Environmental Approval

CEQA		NEPA	
Environmental Determination			
Statutory Exemption	☐		
Categorical Exemption	☐	Categorical Exclusion	☐
Environmental Document			
Initial Study or Focused Initial Study with Negative Declaration or Mitigated ND	☒	Environmental Assessment with Finding of No Significant Impact	☒
Environmental Impact Report	☐	Environmental Impact Statement	☐
CEQA Lead Agency (if determined):		Caltrans	
Estimated length of time (months) to obtain environmental approval:		48	
Estimated person hours to complete identified tasks:		10,764	

4. *Special Environmental Considerations*

All of the alternatives require the same seasonal constraints. The biological surveys will require surveys during the appropriate blooming period and nesting season.

All of the alternatives will require State, Federal and local Coastal permits.

All of the alternatives will require Section 7 consultation for species protected under the Federally Endangered Species Act (FESA) that may be located and/or impacted within the project area.

Consultation with appropriate agencies will be required, once the extent of the project impacts and design are identified. Environmental Management would prepare a Biological Assessment (BA) for approval by these outside agencies. Based on the BA, the outside agencies render a Biological opinion (BO), which is required to achieve project delivery.

5. *Anticipated Environmental Commitments*

All of the alternatives would have similar environmental commitments. Mitigation for temporary and permanent impacts to sensitive biological resources will be required.

Wetland impacts would require approximately $280,000 in mitigation costs which are compensation for wetlands that will be impacted by the proposed project.
Migratory Bird impacts would require approximately $50,000 in mitigation costs related to the implimentation of exclusionary methods used to prevent the birds from nesting on the bridge.

6. *Permits and Approvals*

- Consultation with the United States Coast Guard - six months
- Consultation with the National Marine Fisheries Service – one year.
- A Coastal Development Permit will need to be obtained from Mendocino County.
- Consultation with the U.S. Army Corps of Engineers will be required to obtain a Clean Water Act (CWA) section 404 permit. It is likely that a CWA nationwide permit will be sufficient but an individual permit may be required. Consultation with the Coast Guard will be required to obtain a Rivers and Harbors Act Section 10 permit in conjunction with the 404 permit.
- Consultation with the North Coast Regional Water Quality Control Board will be required to obtain a CWA 401 permit.

- Consultation with the California Department of Fish and Game (CDFG) will be required to obtain a California Fish and Game code 1602 Lake and Streambed Alteration Agreement.

- Consultation under Section 7 of the Federal Endangered Species Act (FESA) may be required through U.S. Fish and Wildlife Service for the western snowy plover, Behren's silverspot butterfly, and Howell's spineflower, as well as the National Marine Fisheries Service for the tidewater goby, Coho salmon, Chinook salmon, and Steelhead.

Table 1: Anticipated Environmental Permit Timelines and Costs

Permit	Anticipated Timeline	Anticipated Cost
CWA Section 404	One year	None
Coastal Development Permit – Mendocino County	One – two years	None
CWA Section 401	One year	Dependant on project impacts, unlikely to exceed $5000
CDFG 1602 Streambed Alteration Agreement	One year	$4000
FESA Section 7	9-16 months	None

7. Level of Effort: Risks and Assumptions

Several threatened and/or endangered species may be impacted by this project, which will require consultation with the US Fish and Wildlife Service and U.S. Army Corps of Engineers Section 404 Permit, historically, has required more than one year, for each one, to obtain.

8. PEAR Technical Summaries

8.1 **Land Use**: At this time, it appears that there is the potential for impacts to the local economy as a result of the proposed project. If, upon design refinement, it is determined there will be impacts to local businesses, including land acquisition, access restrictions, or temporary construction impacts, these issues will need to be considered in depth in a Community Impact Assessment.

8.2 **Growth:** The proposed project is not expected to induce growth. Without more quantifiable data at this time on any potential direct impacts it is difficult to identify any indirect impacts with accuracy. Further research and study on indirect impacts, including any potential growth-inducing impacts is required.

8.3 **Farmlands/Timberlands**: No farmland has been identified in the project area. The proposed project is not expected to impact farmland.

8.4 **Community Impacts**: A complete Community Impact Assessment (CIA) will be necessary to properly analyze the temporary and permanent impacts to the surrounding community. There are two residences below the bridge structure along Salmon Creek and the adjacent bluffs. If the property owners are displaced as a result of the proposed project, a Relocation Impact Study prepared by Right of Way staff would be necessary

8.5 **Visual/Aesthetics**: A complete Visual Impacts Assessment (VIA) will be required to include potential project effects and appropriate mitigation. Elements of the bridge architectural structure, as well as adjacent cut and fill slopes, should be designed to blend in and complement the scenic nature of the coast. Vegetation removal should be minimized to reduce the effect on the environmental and visual setting. Revegetation will be required to minimize long term visual impacts to the roadside viewshed.

8.6 **Cultural Resources**: A record search of the Environmental Study Limits (ESL) for the proposed project was not performed at the California Historical Resources Information System, however, background research from previous reports were consulted. As identified in these resorts, portions of the proposed project's ESL and locations within 1-mile of the ESL were previously surveyed for cultural resources. These previous surveys identified no cultural resources within the proposed project's ESL. However, two prehistoric archaeological sites were identified within 1-mile of the proposed project's ESL.

Additionally, a field review of the proposed project's ESL was conducted by Caltrans cultural resources staff. As a result of the field review, two old road segments were identified (one presently in use), and a structural foundation, and pilings were noted within the proposed project's ESL.

The area is highly sensitive for prehistoric and historical archaeological deposits and cultural resources identification efforts, and possible evaluation and mitigation efforts, must be conducted and documented in compliance with Section 106 of the National Historic Preservation Act (NHPA) and the California Environmental Quality Act (CEQA). These studies and resulting consultation with the State Historic Preservation Office (SHPO) will take between 6 months to 3 years dependent on the identification of archaeological deposits, whether, if identified, they are determined eligible for listing on the National Register of Historic Places (NRHP) or listing on the California Register of Historical Resources, and whether project related impacts must then be mitigated through a Memorandum of Agreement with the SHPO.

8.7 **Hydrology and Floodplain**: A Preliminary Hydraulics Report (PHR) A Floodplain Evaluation Summary (FERS) was prepared on November 24, 2008. No significant impacts or increases in floodwater elevations are expected due to the project scope. A more detailed hydraulic study will be prepared in the Final Hydraulics Report

(FHR). In selecting the center span length and new pier locations (to span the waterway), it is conservatively recommended to use the longest span length that is practical. This would provide additional protection against unknown or unpredictable future site conditions or for potential events due to the bridge site's proximity to the Pacific Ocean. In addition, locating the piers further away from the waterway would also decrease the potential effect of any future lateral channel migration.

8.8 **Water Quality and Storm Water Runoff**: Given that the project will increase the impervious surface in the project area, treatment Best Management Practices (BMPs) will be required to address pollutant loading and hydromodification. Scuppers could be eliminated from the bridge, if at all possible. If not, it is recommended the scuppers be drained to land rather than the active channel. Offset treatment could be required, if treatment BMPs are not feasible on site. The need for additional Right of Way should be evaluated early during project development so that there is adequate space for incorporation of treatment BMPs. If Caltrans is unable to commit to placement of treatment BMPs, the additional sources of polluted runoff should be identified as an impact that would require mitigation to a less than significant level. A water quality study will be prepared for this project.

8.9 **Geology, Soils, Seismic and Topography**: On December 11, 2008, a Preliminary Geotechnical Report was completed. The project is not expected to have any effects on geology, soils, seismic or topography. A Foundation Report, will be required, which will include a field investigation, Cone Penetrometer Test(CPT) borings and a geophysical investigation to define the bedrock profile on both sides of Salmon Creek.

8.10 **Paleontology:** The proposed project is not expected to have any impacts on paleontology resources.

8.11 **Hazardous Waste/Materials**: Based on the Initial Site Assessment, excess material may need to be disposed of offsite. A preliminary site investigation is required.

8.12 **Air Quality:** The Preliminary Environmental Assessment for Air Quality revealed that this project is exempt from air quality conformity analysis.

8.13 **Noise and Vibration**: The project is not anticipated to meet the definition of a Type I project as defined by Caltrans' Traffic Noise Analysis Protocol for New Highway Construction and Reconstruction Projects.

8.14 **Energy and Climate Change:** The proposed project is not expected to have any impacts on Energy or Climate Change.

8.15 **Biological Environment**: A preliminary biological survey was conducted for this current scope of work. The project site should be further reviewed to identify specific habitat types and species within the Environmental Study Limits (ESL) and

project impact area. Emphasis should be placed on the state and federally listed and special status species that may occur in the project vicinity.

Endangered Species The potential to encounter endangered species within the project footprint is high. Field surveys will be necessary to locate and identify plant species located within the ESL. Surveys to determine the presence of any special status wildlife species must be conducted if sensitive species or habitats are located within the project footprint, consultation with the US Fish and Wildlife Service (USFWS), California Department of Fish and Game (CDFG), or other agencies with jurisdiction will be required.

Wetlands It is anticipated that both, Coastal wetlands and federal jurisdictional waters, which are identified within the project area, will be impacted. A delineation of Wetlands and Other Waters of the United States, Waters of the State, and Coastal Wetlands using the the methods provided in the *1987 Corps of Engineers Wetland Delineation Manual* and the *Interim regional supplement to the Corps of Engineers Wetland Delineation Manual: Western Mountains, Valleys, and Coast Region* (U.S. Army Research and Development Center 2008) as well as State and Coastal Commission guidance will need to be conducted as part of this project. A Wetland Delineation Report will be required to address the features which meet the USACE defined criteria of wetlands and other waters of the U.S. A separate report will be necessary to describe the Coastal wetlands.

Mitigation Mitigation are required if impacts are identified and unavoidable. Mitigation cost may vary depending on the level of impacts, as well as the resource(s) (species and/or habitat) identified. Mitigation in the form of minimization, avoidance, and compensatory measures are required for any impacts to wetlands or Waters of the U.S. and threatened, endangered or other special status species habitat within the project area. Additional mitigation may be required for impacts to Waters of the State and Coastal wetlands. Mitigation will be required for any impacts to federally jurisdictional wetlands at a ratio of at least 1:1.

Based on the existing alternatives, impacts to wetlands are anticipated. Impacts may be an acre or greater due to the bridge replacement, culvert, and ditch work. Mitigation will likely be revegetation of temporary impacts and creation or enhancement of features for permanent impacts. A 2:1 ratio was used to estimate mitigation costs. Costs for this work are currently estimated at $140,000 an acre.

Mitigation will be required for impacts to special status plants and animals. This will also involve minimization and avoidance measures that would reduce impacts to sensitive species, including but not limited to tidewater goby, Coho salmon, Chinook salmon, Steelhead, western snowy plover, Behren's silverspot butterfly, and purple martin. Impacts to Behren's silverspot butterfly are unknown at this stage. Depending on project impacts, if any, mitigation could include restoration of habitat.

Based on the existing alternatives, impacts to listed salmoniods, the tidewater goby, and the western snowy plover will be avoided with proper scheduling and staging. If there are significant impacts to the riverbed, restoration will likely be required. Additional mitigation is not anticipated.

To minimize risk to birds nesting within the ESL close to the time of construction, vegetation removal will be conducted outside of the bird nesting season (February 15 through August 31). If vegetation is not removed the year prior to construction, further preconstruction nest surveys for native and migratory birds will be required. Additionally, the staged alternatives (Alternatives 3 and 4) may require that exclusionary devices be used at the existing bridge structure to prevent impacts to nesting and migratory birds. If an active nest is found, then coordination with USFWS and/or CDFG, as appropriate, will be required to determine the appropriate course of action.

8.16 **Cumulative Impacts**: Cumulative impacts will be addressed under each specific subject of the Environmental Document.

8.17 **Context Sensitive Solutions**: Context Sensitive Solutions will be addressed in the Visual Impact Analysis and Design.

9. Summary Statement for PSR or PSR-PDS

In order to identify environmental issues, constraints, costs and resource needs, the North Region Office of Environmental Planning Branch (M-3) prepared a Preliminary Environmental Analysis Report (PEAR) for the project. Preliminary studies consisted of field surveys and a review of records and databases. Based on current information, it is anticipated that the environmental document is an Initial Study/Negative Declaration pursuant to the California Environmental Quality Act (CEQA) and a Routine Environmental Assessment/Finding of No Significant Impact (FONSI) pursuant to the National Environmental Policy Act (NEPA).

Potential impacts requiring further study include:

- Biological Resources
- Cultural Resources
- Community Impacts
- Water Quality
- Hazardous Waste
- Visual Quality
- Floodplain Hydrology Report
- Geotechnical Study and Report

Permission to enter permits will be necessary to enter properties for environmental surveys. It is estimated that completion of the environmental process will require up to 48 months from the submittal date of the Environmental Study Request, which is currently scheduled for September 2010. It should be noted that because of unforeseen delays and

issues that may occur during coordination with federal resource agencies, the time required to attain environmental approval could change considerably. A matrix identifying resources needed to complete environmental studies is included (see Attachment B).

Field surveys for sensitive plant and wildlife species must be conducted between February 15 and August 15. Formal consultation and/or coordination with the California Fish and Game, Army Corp of Engineers and the Regional Water Quality Control Board permits could take up to 12 months to obtain.

It will take between 6-15 months to comply with Section 106 of the National Historic Preservation Act, if required. If archaeological resources are identified and found to be eligible for National Historic listing, the schedule for completing Section 106, the timeline could be extended another two years.

A Water Quality Analysis is needed and coordination with the State Resources Control Board may be required. A Visual Impact Assessment will be required to determine impacts to scenic resources.

10. Disclaimer

This Preliminary Environmental Analysis Report (PEAR) provides information to support programming of the proposed project. It is not an environmental determination or document. Preliminary analysis, determinations, and estimates of mitigation costs are based on the project description provided in the Project Study Report (PSR). The estimates and conclusions in the PEAR are approximate and are based on cursory analyses of probable effects. A reevaluation of the PEAR will be needed for changes in project scope or alternatives, or in environmental laws, regulations, or guidelines.

11. List of Preparers

Cultural Resources specialist Erick Wulf	Date: 4-13-09
Biologist Rebecca Loeffler	Date: 4-14-09
Community Impacts specialist Alicia Boomer	Date: 1/29/09
Noise and Vibration specialist Saied Zandian	Date: 1-8-09
Air Quality specialist Sharon Tang	Date: 2/4/09
Paleontology specialist/liaison N/A	Date: N/A
Water Quality specialist Alex Arevalo D-1	Date: 3-5-09
Hydrology and Floodplain specialist Nicole Braafladt D-1	Date: 2-18-09

Hazardous Waste/Materials specialist Mark Melani	Date: 11-14-09
Visual/Aesthetics specialist Jim Hibbert D-1	Date: 2/10/09
Energy and Climate Change specialist Sharon Tang	Date: 2/4/09
PEAR Preparer (Name and Title) Denise Gibson, Associate Environmental Planner	Date: 4/10/09

12. Review and Approval

I confirm that environmental cost, scope, and schedule have been satisfactorily completed and that the PEAR meets all Caltrans requirements. Also, if the project is scoped as an EA or EIS, I verify that the HQ DEA Coordinator has concurred in the Class of Action.

Kendall Schuler
Environmental Branch Chief

Date: 4/20/09

Project Manager
for Mike Yancheff

Date: 4/20/09

REQUIRED ATTACHMENTS:

Attachment A: PEAR Environmental Studies Checklist
Attachment B: Estimated Resources by WBS Code
Attachment C: Schedule (Gantt Chart) - Unable to obtain at this time
Attachment D: PEAR Environmental Commitments Cost Estimate (Standard PSR)

Attachment A: PEAR Environmental Studies Checklist

Attachment A: PEAR Environmental Studies Checklist

Rev. 11/08

Environmental Studies for PA&ED Checklist					
	Not anticipated	Memo to file	Report required	Risk* L M H	Comments
Land Use	☒	☐	☐	L	
Growth	☒	☐	☐	L	
Farmlands/Timberlands	☒	☐	☐	L	
Community Impacts	☐	☐	☒	L	
Community Character and Cohesion	☐	☐	☒	L	
Relocations	☒	☐	☐	L	
Environmental Justice	☒	☐	☐	L	
Utilities/Emergency Services	☒	☐	☐	L	
Visual/Aesthetics	☐	☐	☒	M	
Cultural Resources:	☐	☐	☒	M	
Archaeological Survey Report	☐	☐	☒	L	
Historic Resources Evaluation Report	☐	☐	☒	L	
Historic Property Survey Report	☐	☒	☐	L	
Historic Resource Compliance Report	☒	☐	☐	L	
Section 106 / PRC 5024 & 5024.5	☐	☒	☐	L	
Native American Coordination	☒	☐	☐	L	
Finding of Effect	☒	☐	☐	L	
Data Recovery Plan	☒	☐	☐	L	
Memorandum of Agreement	☒	☐	☐	L	
Other: if needed	☐	☐	☒	L	
Hydrology and Floodplain	☐	☐	☒	L	
Water Quality and Stormwater Runoff	☐	☐	☒	L	
Geology, Soils, Seismic and Topography	☐	☐	☒	L	
Paleontology	☒	☐	☐	L	
PER	☒	☐	☐	L	
PMP	☒	☐	☐	L	
Hazardous Waste/Materials:	☐	☐	☒	M	
ISA (Additional)	☐	☐	☒	L	
PSI	☐	☐	☒	L	
Other:	☒	☐	☐	L	
Air Quality	☐	☒	☐	L	
Noise and Vibration	☐	☒	☐	L	
Energy and Climate Change	☐	☒	☐	L	
Biological Environment	☐	☐	☒	M	
Natural Environment Study	☐	☐	☒	L	
Section 7:	☐	☐	☒	M	
Formal	☐	☐	☒	M	
Informal	☐	☒	☐	L	
No effect	☐	☒	☐	L	
Section 10	☐	☐	☒	L	
USFWS Consultation	☐	☐	☒	M	
NMFS Consultation	☐	☐	☒	M	
Species of Concern (CNPS, USFS, BLM, S, F)	☐	☐	☒	L	

Environmental Studies for PA&ED Checklist					
	Not anticipated	Memo to file	Report required	Risk* L M H	Comments
Wetlands & Other Waters/Delineation	☐	☐	☒	M	
404(b)(1) Alternatives Analysis	☐	☐	☒	L	
Invasive Species	☐	☒	☐	L	
Wild & Scenic River Consistency	☐	☒	☐	L	
Coastal Management Plan	☐	☒	☐	L	
HMMP	☒	☐	☐	L	
DFG Consistency Determination	☒	☐	☐	L	
2081	☒	☐	☐	L	
Other:	☐	☐	☐	L	
Cumulative Impacts	☐	☒	☐	L	
Context Sensitive Solutions	☐	☐	☒	M	
Section 4(f) Evaluation	☒	☐	☐	L	
Permits:					
401 Certification Coordination	☐	☐	☒	M	Cert
404 Permit Coordination, IP, NWP, or LOP	☐	☐	☒	H	NWP
1602 Agreement Coordination	☐	☐	☒	M	Agreement
Local Coastal Development Permit Coordination	☐	☐	☒	H	Permit
State Coastal Development Permit Coordination	☐	☐	☒	H	
NPDES Coordination	☐	☐	☒	L	
US Coast Guard (Section 10)	☐	☒	☐	L	
TRPA	☒	☐	☐	L	
BCDC	☒	☐	☐	L	

Attachment B: Estimated Resources by WBS Code

ATTACHMENT B - Resources by WBS Code
PERT Calculation

EA: 01-40140K
Description: Salmon Creek Br Reconstruction

WBS Task Activity Code	Division Chief	Office Chief	Senior	Coord	Biology	Cultural	Haz Waste	Socio-Economic	Storm Water	Noise/Air	Sup Svcs	Design	Hydraulics	Landscape	Planning	Right of Way	Surveys	Total	Begin Date	End Date	Duration (Calendar Days)
Assigned Unit	177	157	173	173	173	174	349	170	349	174	183										
Project Management																					
100.10.05 – PA&ED Init. & Plng.	11	11	11	11	11	12	11	11	7	11	11	-	-	30	-	-	-	148			-
100.10.10 – PA&ED Exec. & Ctrl.	-	-	20	20	-	-	-	-	-	-	6	-	-	30	-	-	-	76			-
100.10.15 – PA&ED Closeout	-	-	-	-	-	-	-	-	-	-	-	-	-	-	-	-	-	-			-
100.10.20 – PA&ED Project Shelving	-	-	5	-	-	-	-	-	-	-	-	-	-	-	-	-	-	5			-
100.10.25 – PA&ED Project Unshelving	-	-	-	-	-	-	-	-	-	-	-	-	-	-	-	-	-	-			-
100.10.30 – PA&ED Update Admin Record	-	-	-	-	-	-	-	-	-	-	6	-	-	-	-	-	-	6			-
100.10.35 – PA&ED Cooperative Agreement	-	-	-	-	-	-	-	-	-	-	-	-	-	-	-	-	-	-			-
100.10.99 - PA&ED Other Proj. Mgmt Products	-	-	-	-	-	-	-	-	-	-	-	-	-	-	-	-	-	-			-
100.15.05 – PS&E Init. & Plng.	11	11	11	11	11	-	11	-	7	11	11	-	-	-	-	-	-	95			-
100.15.10 – PS&E Exec. & Ctrl.	-	-	-	-	-	-	-	-	-	-	-	-	-	-	-	-	-	-			-
100.15.15 – PS&E Closeout	-	-	-	-	-	-	-	-	-	-	-	-	-	-	-	-	-	-			-
100.15.20 – PS&E Project Shelving	-	-	5	-	-	-	-	-	-	-	-	-	-	-	-	-	-	5			-
100.15.25 – PS&E Project Unshelving	-	-	-	-	-	-	-	-	-	-	-	-	-	-	-	-	-	-			-
100.15.30 – PS&E Update Admin Record	-	-	-	-	-	-	-	-	-	-	-	-	-	-	-	-	-	-			-
100.15.35 – PS&E Cooperative Agreement	-	-	-	-	-	-	-	-	-	-	-	-	-	-	-	-	-	-			-
100.15.99 – PS&E Other Proj. Mgmt. Products	-	-	-	-	-	-	-	-	-	-	-	-	-	-	-	-	-	-			-
100.20.05 – Const. Init. & Plng.	11	11	11	11	11	12	11	11	7	11	11	-	-	-	-	-	-	118			-
100.20.10 – Const. Exec. & Ctrl.	-	-	-	-	-	-	-	-	-	-	-	-	-	-	-	-	-	-			-
100.20.15 – Const. Closeout	-	-	-	-	-	-	-	-	-	-	-	-	-	-	-	-	-	-			-
100.20.20 – Const. Project Shelving	-	-	5	-	-	-	-	-	-	-	-	-	-	-	-	-	-	5			-
100.20.25 – Const. Project Unshelving	-	-	-	-	-	-	-	-	-	-	-	-	-	-	-	-	-	-			-
100.20.30 – Const. Update Admin Record	-	-	-	-	-	-	-	-	-	-	-	-	-	-	-	-	-	-			-
100.20.35 – Const. Cooperative Agreement	-	-	-	-	-	-	-	-	-	-	-	-	-	-	-	-	-	-			-
100.20.99 – Const. Other Proj. Mgmt. Products	-	-	-	-	-	-	-	-	-	-	-	-	-	-	-	-	-	-			-
100.25.05 – RW Init. & Plng.	-	-	-	-	-	-	-	-	-	-	-	-	-	-	-	-	-	-			-
100.25.10 – RW Exec. & Ctrl.	-	-	-	-	-	-	-	-	-	-	-	-	-	-	-	-	-	-			-
100.25.15 – RW Closeout	-	-	-	-	-	-	-	-	-	-	-	-	-	-	-	-	-	-			-
100.25.20 – RW Project Shelving	-	-	5	-	-	-	-	-	-	-	-	-	-	-	-	-	-	5			-
100.25.25 – RW Project Unshelving	-	-	-	-	-	-	-	-	-	-	-	-	-	-	-	-	-	-			-
100.25.30 – RW Update Admin Record	-	-	-	-	-	-	-	-	-	-	-	-	-	-	-	-	-	-			-
100.25.35 – RW Cooperative Agreement	-	-	-	-	-	-	-	-	-	-	-	-	-	-	-	-	-	-			-
100.25.50 – RW Ex. Coop. Agree. Relinquish	-	-	-	-	-	-	-	-	-	-	-	-	-	-	-	-	-	-			-
100.25.99 – RW Other Proj. Mgmt. Products	-	-	-	-	-	-	-	-	-	-	-	-	-	-	-	-	-	-			-
Total Project Management	33	33	73	53	33	24	33	22	22	33	45	-	-	60	-	-	-	484			-
Preliminary Engineering Studies and Draft Project Report																					
160.05.05 – Approved PID Review	-	10	9	9	-	-	-	-	-	-	5	-	-	40	-	-	-	73			-
160.05.10 – Geotechnical Information Review	-	-	-	-	-	-	-	-	-	-	-	-	-	-	-	-	-	-			-
160.05.20 – Traffic Data & Forecasts Review	-	-	-	-	-	-	-	-	-	-	-	-	-	-	-	-	-	-			-
160.05.30 – Project Scope Review	-	-	9	9	-	-	-	-	-	-	-	-	-	-	-	-	-	18			-
160.05.99 – Other Updated Project Info Products	-	-	-	-	-	-	-	-	-	-	-	-	-	-	-	-	-	-			-
160.10.20 – Value Analysis	-	-	9	9	-	-	-	-	-	-	-	-	-	-	-	-	-	18			-
160.10.25 – Hydraulics/Hydrology Study	-	-	-	-	-	-	-	-	-	-	-	-	-	-	-	-	-	-			-
160.10.30 – Hwy Planting Design Concepts	-	-	-	-	-	-	-	-	-	-	-	-	-	-	-	-	-	-			-
160.10.40 – Updated Right of Way Data Sheets	-	-	-	-	-	-	-	-	-	-	-	-	-	-	-	-	-	-			-
160.10.99 – Other Engineering Studies	-	-	-	-	-	-	-	-	-	-	-	-	-	-	-	-	-	-			-
160.15.20 – Draft Project Report	-	-	-	-	-	-	-	-	-	-	-	-	-	-	-	-	-	-			-
160.15.25 – Draft PR Circ., Review & Approval	-	-	5	16	-	-	4	-	4	-	-	-	-	44	-	-	-	74			-
160.30.05 – Maps for ESR	-	-	5	10	-	-	-	-	-	-	-	-	-	-	-	-	-	15			-
160.30.10 – Surveys & Mapping for ESR	-	-	-	10	-	-	-	-	-	-	-	-	-	-	-	-	-	10			-
160.30.15 – Prop. Access Rights - Env/Eng Studies	-	-	-	-	-	-	-	-	-	-	-	-	-	-	-	-	-	-			-
160.40 – NEPA Delegation	-	-	10	20	-	-	-	-	-	-	-	-	-	-	-	-	-	30			-
Total Pre. Eng. Studies & Draft PR	-	10	48	84	-	-	4	-	4	-	5	-	-	84	-	-	-	239			-

WBS Task Activity Code	Division Chief	Office Chief	Senior	Coord	Biology	Cultural	Haz Waste	Socio-Economic	Storm Water	Noise/Air	Sup Svcs	Design	Hydraulics	Landscape	Planning	Right of Way	Surveys	Total	Begin Date	End Date	Duration (Calendar Days)
Assigned Unit	177	157	173	173	173	174	349	170	349	174	183										
Environmental Studies and Draft Environmental Document - Task Management Activities																					
165.05.05 – Project Information Review	10	10	7	10	-	-	-	-	-	-	5	-	-	40	-	-	-	82			-
165.05.10 – Pub & Agency Scoping Process	-	-	7	10	10	-	-	-	-	-	-	-	-	-	-	-	-	27			-
165.05.15 – Alternatives for Further Study	-	-	7	10	-	-	-	-	-	-	-	-	-	-	-	-	-	17			-
165.05.99 – Other Env Scoping Alt ID in PID	-	-	-	-	-	-	-	-	-	-	-	-	-	-	-	-	-	-			-
165.10.15 – CIA, Land Use & Growth Studies	-	-	-	-	-	-	-	546	-	-	-	-	-	-	-	-	-	546			-
165.10.20 – VIA & Scenic Resource Evaluation	-	-	-	-	-	-	-	-	-	-	-	-	-	40	-	-	-	40			-
165.10.25 – Noise Study	-	-	-	-	-	-	-	-	-	50	-	-	-	-	-	-	-	50			-
165.10.30 – Air Quality Study	-	-	-	-	-	-	-	-	-	50	-	-	-	-	-	-	-	50			-
165.10.35 – Water Quality Studies	-	-	-	-	-	-	-	-	76	-	-	-	-	-	-	-	-	76			-
165.10.40 – Energy Studies	-	-	-	-	-	-	-	-	-	-	-	-	-	-	-	-	-	-			-
165.10.45 – Summary Geotech Report	-	-	-	-	-	-	-	-	-	-	-	-	-	-	-	-	-	-			-
165.10.50 – Hazardous Waste PSI	-	-	-	-	-	-	117	-	-	-	-	-	-	-	-	-	-	117			-
165.10.55 – Draft RW Relocation Impact Doc.	-	-	-	-	-	-	-	-	-	-	-	-	-	-	-	-	-	-			-
165.10.60 – Loc. Hyd. & Floodplain Stdy Rpts.	-	-	-	-	-	-	-	-	-	-	-	-	-	-	-	-	-	-			-
165.10.65 – Paleontology Study	-	-	-	-	-	-	-	-	-	-	-	-	-	-	-	-	-	-			-
165.10.70 – Wild and Scenic Rivers Coordination	-	-	-	-	-	-	-	-	-	-	-	-	-	-	-	-	-	-			-
165.10.75 – Environmental Commitments Record	-	-	10	12	-	-	-	-	-	-	-	-	-	-	-	-	-	22			
165.10.99 – Other Environmental Studies	-	-	-	-	-	-	-	-	-	-	-	-	-	-	-	-	-	-			
165.15.05 – Biological Assessment	-	-	-	-	78	-	-	-	-	-	-	-	-	-	-	-	-	78			-
165.15.10 – Wetlands Study	-	-	-	-	50	-	-	-	-	-	-	-	-	-	-	-	-	50			-
165.15.15 – Resource Agcy Permit Related Coord	-	-	-	-	73	-	-	-	-	-	-	-	-	-	-	-	-	73			-
165.15.20 – NES Report	-	-	-	-	73	-	-	-	-	-	-	-	-	-	-	-	-	73			-
165.15.99 – Other Biological Studies	-	-	-	-	47	-	-	-	-	-	-	-	-	-	-	-	-	47			-
165.20.05 – Archaeological Survey	-	-	-	-	-	-	-	-	-	-	-	-	-	-	-	-	-	-			-
165.20.05.05 – APE/Study Area Map(s)	-	-	-	-	-	41	-	-	-	-	-	-	-	-	-	-	-	41			-
165.20.05.10 – Native American Consultation	-	-	-	-	-	84	-	-	-	-	-	-	-	-	-	-	-	84			-
165.20.05.15 – Records & Literature Search	-	-	-	-	-	75	-	-	-	-	-	-	-	-	-	-	-	75			-
165.20.05.20 – Field Survey	-	-	-	-	-	168	-	-	-	-	-	-	-	-	-	-	-	168			-
165.20.05.25 – ASR	-	-	-	-	-	253	-	-	-	-	-	-	-	-	-	-	-	253			-
165.20.05.99 – Other Archy Survey Products	-	-	-	-	-	41	-	-	-	-	-	-	-	-	-	-	-	41			-
165.20.10 – Extended Phase I Archy Studies	-	-	-	-	-	-	-	-	-	-	-	-	-	-	-	-	-	-			-
165.20.10.05 – Native American Consultation	-	-	-	-	-	80	-	-	-	-	-	-	-	-	-	-	-	80			-
165.20.10.10 – Extended Phase I Proposal	-	-	-	-	-	80	-	-	-	-	-	-	-	-	-	-	-	80			-
165.20.10.15 – Extended Phase I Field Inv.	-	-	-	-	-	80	-	-	-	-	-	-	-	-	-	-	-	80			-
165.20.10.20 – Extended Phase I Mat. Analysis	-	-	-	-	-	80	-	-	-	-	-	-	-	-	-	-	-	80			-
165.20.10.25 – Extended Phase I Report	-	-	-	-	-	120	-	-	-	-	-	-	-	-	-	-	-	120			-
165.20.10.99 – Other Ext Phase I Arcy Prod	-	-	-	-	-	80	-	-	-	-	-	-	-	-	-	-	-	80			-
165.20.15 – Phase II Archy Studies	-	-	-	-	-	-	-	-	-	-	-	-	-	-	-	-	-	-			-
165.20.15.05 – Native American Consultation	-	-	-	-	-	160	-	-	-	-	-	-	-	-	-	-	-	160			-
165.20.15.10 – Phase II Proposal	-	-	-	-	-	160	-	-	-	-	-	-	-	-	-	-	-	160			-
165.20.15.15 – Phase II Field Investigation	-	-	-	-	-	160	-	-	-	-	-	-	-	-	-	-	-	160			-
165.20.15.20 – Phase II Materials Analysis	-	-	-	-	-	80	-	-	-	-	-	-	-	-	-	-	-	80			-
165.20.15.25 – Phase II Report	-	-	-	-	-	160	-	-	-	-	-	-	-	-	-	-	-	160			-
165.20.15.99 – Other Ext Phase II Archy Study	-	-	-	-	-	40	-	-	-	-	-	-	-	-	-	-	-	40			-
165.20.20 – Hist & Architect Resource Studies	-	-	-	-	-	-	-	-	-	-	-	-	-	-	-	-	-	-			-
165.20.20.05 – Prelim APE/SAM for Arch.	-	-	-	-	-	41	-	-	-	-	-	-	-	-	-	-	-	41			-
165.20.20.10 – HRER - Archaeology	-	-	-	-	-	240	-	-	-	-	-	-	-	-	-	-	-	240			-
165.20.20.15 – HRER - Architecture	-	-	-	-	-	267	-	-	-	-	-	-	-	-	-	-	-	267			-
165.20.20.20 – Bridge Evaluation	-	-	-	-	-	-	-	-	-	-	-	-	-	-	-	-	-	-			-
165.20.20.99 – Other Hist and Arch Resource Prod	-	-	-	-	-	40	-	-	-	-	-	-	-	-	-	-	-	40			-
165.20.25 – Cultural Res. Comp. Cons. Docs.	-	-	-	-	-	-	-	-	-	-	-	-	-	-	-	-	-	-			-
165.20.25.05 – Final APE/Study Area Maps	-	-	-	-	-	81	-	-	-	-	-	-	-	-	-	-	-	81			-
165.20.25.10 – PRC 5024.5 Consultation	-	-	-	-	-	80	-	-	-	-	-	-	-	-	-	-	-	80			-
165.20.25.15 – HPSR/HRCR	-	-	-	-	-	167	-	-	-	-	-	-	-	-	-	-	-	167			-
165.20.25.20 – Finding of Effect (FOE)	-	-	-	-	-	80	-	-	-	-	-	-	-	-	-	-	-	80			-
165.20.25.25 – Archy Data Rec. Pln./Treat. Pln	-	-	-	-	-	730	-	-	-	-	-	-	-	-	-	-	-	730			-
165.20.25.30 – MOA	-	-	-	-	-	160	-	-	-	-	-	-	-	-	-	-	-	160			-
165.20.25.99 – Other CR Compliance Consult Prod	-	-	-	-	-	81	-	-	-	-	-	-	-	-	-	-	-	81			-
165.25.05 – DED Analysis	10	10	9	23	-	-	-	-	-	-	40	-	-	-	-	-	-	93			-
165.25.10 – Section 4(f) Evaluation	-	-	9	23	-	-	-	-	-	-	-	-	-	-	-	-	-	33			-
165.25.15 – CE/CE Determination	-	-	-	-	-	-	-	-	-	-	-	-	-	-	-	-	-	-			-
165.25.20 – Env. Quality Ctrl. & Other Reviews	10	10	9	37	78	43	-	-	-	37	5	-	-	-	-	-	-	229			-
165.25.25 – Approval to Circulate Resolution	8	8	-	40	-	-	-	-	-	-	-	-	-	-	-	-	-	56			-
165.25.30 – Environmental Coordination	-	-	-	350	-	-	-	-	-	-	-	-	-	-	-	-	-	350			-
165.25.99 – Other Draft ED Products	-	-	-	47	-	-	-	-	-	-	-	-	-	-	-	-	-	47			-
165.30 – NEPA Delegation	2	2	12	40	37	41	-	-	-	-	-	-	-	-	-	-	-	134			-
Total Environmental Studies & DED	40	40	69	602	447	3,994	117	546	76	137	50	-	-	80	-	-	-	6,197			-
Permits, Agreements, and Route Adoptions during PA&ED Componenet - Task Management Activities																					
170.05 – Required Permits	-	-	-	8	20	-	-	-	-	-	-	-	-	-	-	-	-	28			-
170.10.05 – USACE Permit (404)	-	-	-	10	40	-	-	-	-	-	-	-	-	-	-	-	-	50			-
170.10.10 – US Forest Service Permit(s)	-	-	-	-	-	-	-	-	-	-	-	-	-	-	-	-	-	-			-
170.10.15 – US Coast Guard Permit	-	-	-	-	-	-	-	-	-	-	-	-	-	-	-	-	-	-			-
170.10.20 – DFG 1600 Agreement(s)	-	-	-	-	37	-	-	-	-	-	-	-	-	-	-	-	-	37			-
170.10.25 – Coastal Zone Development Permit	-	-	-	-	-	-	-	-	-	-	-	-	-	-	-	-	-	-			-
170.10.30 – Local Agency Concurrence/Permit	-	-	-	-	-	-	-	-	-	-	-	-	-	-	-	-	-	-			-
170.10.40 – Waste Discharge (NPDES) Permit(s)	-	-	-	-	-	-	-	-	-	-	-	-	-	-	-	-	-	-			-
170.10.45 – USFWS Approval	-	-	-	9	37	-	-	-	-	-	-	-	-	-	-	-	-	45			-
170.10.50 – RWQCB 401 Permit	-	-	-	-	37	-	-	-	-	-	-	-	-	-	-	-	-	37			-
170.10.60 – Environmental Commitments Record	-	-	-	20	9	21	-	-	-	-	-	-	-	-	-	-	-	50			-

WBS Task Activity Code	Division Chief	Office Chief	Senior	Coord	Biology	Cultural	Haz Waste	Socio-Economic	Storm Water	Noise/Air	Sup Svcs	Design	Hydraulics	Landscape	Planning	Right of Way	Surveys	Total	Begin Date	End Date	Duration (Calendar Days)
Assigned Unit	177	157	173	173	173	174	349	170	349	174	183										
170.10.95 – Other Permits	-	-	-	-	-	-	-	-	-	-	-	-	-	-	-	-	-	-			-
170.45 – MOU from TERO	-	-	-	-	-	-	-	-	-	-	-	-	-	-	-	-	-	-			-
170.10.55 – NEPA Delegation	-	-	10	37	37	-	-	-	-	-	-	-	-	-	-	-	-	83			-
Total Permits, Agreements & Route Adoptions	-	-	10	84	216	21	-	-	-	-	-	-	-	-	-	-	-	330			-

WBS Task Activity Code	Division Chief	Office Chief	Senior	Coord	Biology	Cultural	Haz Waste	Socio-Economic	Storm Water	Noise/Air	Sup Svcs	Design	Hydraulics	Landscape	Planning	Right of Way	Surveys	Total	Begin Date	End Date	Duration (Calendar Days)
Assigned Unit	177	157	173	173	173	174	349	170	349	174	183										
Draft Environmental Document Circulation and Preferred Project Alternative Identification - Task Management Activities																					
175.05.05 – Master Dist & Inv Lists	-	-	-	20	-	-	-	-	-	-	-	-	-	-	-	-	-	20			-
175.05.10 – Notices Regarding Hearing & DED	-	-	-	20	-	-	-	-	-	-	-	-	-	-	-	-	-	20			-
175.05.15 – DED Publication & Circulation	-	-	-	40	-	83	-	-	-	-	8	-	-	-	-	-	-	131			-
175.05.20 – Federal Consistency Det. (Coastal)	-	-	-	-	-	-	-	-	-	-	-	-	-	-	-	-	-	-			-
175.05.99 – Other DED Circulation Products	-	-	-	20	-	-	-	-	-	-	-	-	-	-	-	-	-	20			-
175.10.05 – Need for Public Hearing Det.	-	-	-	20	-	-	-	-	-	-	-	-	-	-	-	-	-	20			-
175.10.10 – Public Hearing Logistics	-	-	-	20	-	-	-	-	-	-	-	-	-	-	-	-	-	20			-
175.10.15 – Displays for Public Hearing	-	-	-	20	-	-	-	-	-	-	8	-	-	-	-	-	-	28			-
175.10.20 – 2nd Not. Pub. Hear. & Avail. of DED	-	-	-	-	-	-	-	-	-	-	-	-	-	-	-	-	-	-			-
175.10.25 – Map Display & Pub. Hearing Plan	-	-	-	20	-	-	-	-	-	-	8	-	-	-	-	-	-	28			-
175.10.30 – Display Public Hearing Maps	-	-	-	20	-	-	-	-	-	-	-	-	-	-	-	-	-	20			-
175.10.35 – Public Hearing	-	-	-	20	-	-	-	40	-	18	-	-	-	-	-	-	-	78			-
175.10.40 – Record of Public Hearing	-	-	-	20	-	-	-	-	-	-	-	-	-	-	-	-	-	20			-
175.10.99 – Other Public Hearing Products	-	-	-	20	-	-	-	-	-	-	-	-	-	-	-	-	-	20			-
175.15 – Public Comment Res. & Corr.	10	10	20	47	-	-	-	40	-	-	-	-	-	-	-	-	-	127			-
175.20 – Project Preferred Alternative	2	2	-	20	-	-	-	-	-	-	8	-	-	-	-	-	-	32			-
175.25 – NEPA Delegation	2	2	-	43	-	-	-	-	-	-	-	-	-	-	-	-	-	47			-
Total DED & Preferred Proj. Alt. Identification	14	14	20	370	-	83	-	80	-	18	32	-	-	-	-	-	-	631			-
Project Report and Final Environmental Document																					
180.05.05 – Updated Draft Project Report	-	-	-	40	-	-	-	-	-	-	-	-	-	-	-	-	-	40			-
180.05.10 – Approved Project Report	-	-	-	-	-	-	1	-	1	-	-	-	-	-	-	-	-	3			-
180.05.15 – Updated Storm Water Data Report	-	-	-	-	-	-	-	-	-	-	-	-	-	-	-	-	-	-			-
180.05.99 – Other Final Project Report Products	-	-	-	10	-	-	-	-	-	-	-	-	-	-	-	-	-	10			-
180.10.05 – Approved FED	-	-	20	47	-	-	-	-	-	-	-	-	-	-	-	-	-	67			-
180.10.05.05 – Draft FED Review	-	-	-	20	-	83	-	-	-	-	-	-	-	-	-	-	-	103			-
180.10.05.10 – Revised Draft FED	-	-	-	20	-	-	-	-	-	-	-	-	-	-	-	-	-	20			-
180.10.05.15 – Section 4(f) Evaluation	-	-	-	20	-	-	-	-	-	-	-	-	-	-	-	-	-	20			-
180.10.05.20 – Findings	-	-	-	10	-	-	-	-	-	-	-	-	-	-	-	-	-	10			-
180.10.05.25 – Statement of Overriding Consid.	-	-	-	9	-	-	-	-	-	-	-	-	-	-	-	-	-	9			-
180.10.05.30 – CEQA Certification	-	-	-	9	-	-	-	-	-	-	-	-	-	-	-	-	-	9			-
180.10.05.35 – FHWA Approval	-	-	-	-	-	-	-	-	-	-	-	-	-	-	-	-	-	-			-
180.10.05.40 – Section 106 Cons. & MOA	-	-	-	-	-	160	-	-	-	-	-	-	-	-	-	-	-	160			-
180.10.05.45 – Section 7 Consult	-	-	-	-	73	-	-	-	-	-	-	-	-	-	-	-	-	73			-
180.10.05.50 – Final Section 4(f) Statement	-	-	-	-	-	-	-	-	-	-	-	-	-	-	-	-	-	-			-
180.10.05.55 – Floodplain Only PAF	-	-	-	-	-	-	-	-	-	-	-	-	-	-	-	-	-	-			-
180.10.05.60 – Wetlands Only PAF	-	-	-	-	-	-	-	-	-	-	-	-	-	-	-	-	-	-			-
180.10.05.65 – Section 404 Compliance	-	-	-	-	-	-	-	-	-	-	-	-	-	-	-	-	-	-			-
180.10.05.70 – Mitigation Measures	-	-	-	-	37	-	-	-	-	-	-	-	-	-	-	-	-	37			-
180.10.10 – Public Dist of FED, Resp to Comments	8	8	20	43	-	-	-	-	-	28	16	-	-	-	-	-	-	123			-
180.10.99 – Other FED Products	-	-	10	23	-	-	-	-	-	-	-	-	-	-	-	-	-	33			-
180.15.05 – ROD (NEPA)	-	2	-	10	-	-	-	-	-	-	-	-	-	-	-	-	-	12			-
180.15.10 – NOD (CEQA)	-	2	-	10	-	-	-	-	-	-	-	-	-	-	-	-	-	12			-
180.15.20 – Environmental Commitments Record	-	-	-	22	10	10	4	-	4	9	-	-	-	-	-	-	-	59			-
180.15.99 – Other Completed ED Products	-	-	-	10	-	-	-	-	-	-	-	-	-	-	-	-	-	10			-
180.20 – NEPA Delegation	-	-	-	38	-	41	-	-	-	-	-	-	-	-	-	-	-	80			-
Total PR & FED	8	12	50	341	120	294	5	-	5	37	16	-	-	-	-	-	-	889			-
Base Maps and Plan Sheets during PS&E Development																					
185.05.05 – Project Concept Review	-	-	-	-	-	-	-	-	-	-	-	-	-	-	-	-	-	-			-
185.05.10 – Updated Project Information	-	-	-	6	-	-	-	-	-	-	-	-	-	-	-	-	-	6			-
185.05.99 – Other Updated Project Info Products	-	-	-	-	-	-	-	-	-	-	-	-	-	-	-	-	-	-			-
185.15.20 – Value Analysis	-	-	-	10	-	-	-	-	-	-	-	-	-	-	-	-	-	10			-
Total Base Maps and Plan Sheets during PS&E	-	-	-	16	-	-	-	-	-	-	-	-	-	-	-	-	-	16			-
Right of Way Property Management and Excess Land																					
195.40.20 – Property Maint. & Rehab (Rentable)	-	-	-	-	-	-	-	-	-	-	-	-	-	-	-	-	-	-			-
195.40.25 – Prop. Maint. & Rehab (Non-Rentable)	-	-	-	-	-	-	-	-	-	-	-	-	-	-	-	-	-	-			-
195.40.30 – HW & Hazardous Materials	-	-	-	-	-	-	-	-	-	-	-	-	-	-	-	-	-	-			-
195.40.35 – Transfer of Prop to Clearance Status	-	-	-	-	-	-	-	-	-	-	-	-	-	-	-	-	-	-			-
195.40.99 – Other Property Mgmt Products	-	-	-	-	-	-	-	-	-	-	-	-	-	-	-	-	-	-			-
195.45.05 – Excess Lands Inventory	-	-	-	-	-	-	-	-	-	-	-	-	-	-	-	-	-	-			-
195.45.20 – Property Disposal up to $15K	-	-	-	-	-	-	-	-	-	-	-	-	-	-	-	-	-	-			-
195.45.25 – Property Disposal from $15K to $500K	-	-	-	-	-	-	-	-	-	-	-	-	-	-	-	-	-	-			-
195.45.30 – Property Disposal over $500K	-	-	-	-	-	-	-	-	-	-	-	-	-	-	-	-	-	-			-
195.45.99 – Other Excess Land Products	-	-	-	-	-	-	-	-	-	-	-	-	-	-	-	-	-	-			-
Total Base RW Property Mgmt and Excess Land	-	-	-	-	-	-	-	-	-	-	-	-	-	-	-	-	-	-			-
Utility Coordination																					
200.15 – Approved Utility Relocation Plan	-	-	-	-	-	-	-	-	-	-	-	-	-	-	-	-	-	-			-
200.20 – Utility Relocation Package	-	-	-	-	-	-	-	-	-	-	-	-	-	-	-	-	-	-			-
Total Utility Coordination	-	-	-	-	-	-	-	-	-	-	-	-	-	-	-	-	-	-			-

WBS Task Activity Code	Division Chief	Office Chief	Senior	Coord	Biology	Cultural	Haz Waste	Socio-Economic	Storm Water	Noise/Air	Sup Svcs	Design	Hydraulics	Landscape	Planning	Right of Way	Surveys	Total	Begin Date	End Date	Duration (Calendar Days)
Assigned Unit	177	157	173	173	173	174	349	170	349	174	183										
Permits, Agreements & Route Adoptions during PS&E Component - Task Management Activities																					
205.05 – Reqired Permits	-	-	-	23	18	-	-	-	24	-	8	-	-	-	-	-	-	74			-
205.10.05 – USACE Permit (404)	-	-	-	-	83	-	-	-	-	-	-	-	-	-	-	-	-	83			-
205.10.10 – US Forest Service Permit(s)	-	-	-	-	-	-	-	-	-	-	-	-	-	-	-	-	-	-			-
205.10.15 – US Coast Guard Permit	-	-	-	-	-	-	-	-	-	-	-	-	-	-	-	-	-	-			-
205.10.20 – DFG 1600 Agreement(s)	-	-	-	-	73	-	-	-	-	-	-	-	-	-	-	-	-	73			-
205.10.25 – Coastal Zone Development Permit	-	-	-	-	-	-	-	-	-	-	-	-	-	-	-	-	-	-			-
205.10.30 – Local Agency Concurrence/Permit	-	-	-	-	-	-	-	-	-	-	-	-	-	-	-	-	-	-			-
205.10.40 – Waste Discharge (NPDES) Permit(s)	-	-	-	-	-	-	-	-	-	-	-	-	-	-	-	-	-	-			-
205.10.45 – USFWS Approval	-	-	-	-	73	-	-	-	-	-	-	-	-	-	-	-	-	73			-
205.10.50 – RWQCB 401 Permit	-	-	-	-	37	-	-	-	-	-	-	-	-	-	-	-	-	37			-
205.10.60 – Updated ECR	-	-	-	-	-	10	-	-	-	-	-	-	-	-	-	-	-	10			-
205.10.95 – Other Permits	-	-	-	-	-	-	-	-	-	-	-	-	-	-	-	-	-	-			-
205.20.05 – Draft Freeway Agreement	-	-	-	-	-	-	-	-	-	-	-	-	-	-	-	-	-	-			-
205.20.10 – Draft Freeway Agreement Review	-	-	-	-	-	-	-	-	-	-	-	-	-	-	-	-	-	-			-
205.20.15 – Final Freeway Agreement	-	-	-	-	-	-	-	-	-	-	-	-	-	-	-	-	-	-			-
205.20.20 – Executed Freeway Agreement	-	-	-	-	-	-	-	-	-	-	-	-	-	-	-	-	-	-			-
205.25 – Agreement for Material Sites	-	-	-	-	-	-	-	-	-	-	-	-	-	-	-	-	-	-			-
205.40.99 – Other Route Adoption Products	-	-	-	-	-	-	-	-	-	-	-	-	-	-	-	-	-	-			-
205.45 – MOU from TERO	-	-	-	-	-	-	-	-	-	-	-	-	-	-	-	-	-	-			-
205.55 – NEPA Delegation	2	2	-	-	-	-	-	-	-	-	-	-	-	-	-	-	-	4			-
Total Agreements & Route Adoptions	2	2	-	23	285	10	-	-	24	-	8	-	-	-	-	-	-	354			-
Right of Way Interests for Project Right of Way Certification																					
225.55.20 – Right of Way Clearance	-	-	-	-	-	-	-	-	-	-	-	-	-	-	-	-	-	-			-
Total RW Interests for Project RW Certification	-	-	-	-	-	-	-	-	-	-	-	-	-	-	-	-	-	-			-
Draft PS&E																					
230.05.45 – Noise Barrier Plans	-	-	-	-	-	-	-	-	-	-	-	-	-	-	-	-	-	-			-
230.05.65 – Water Pollution Control Plans	-	-	-	-	-	-	-	-	8	-	-	-	-	-	-	-	-	8			-
230.10.05 – Highway Planting Plans	-	-	-	-	-	-	-	-	-	-	-	-	-	480	-	-	-	480			-
230.10.15 – Plant List	-	-	-	-	-	-	-	-	-	-	-	-	-	-	-	-	-	-			-
230.30 – Draft Drainage Plans	-	-	-	-	-	-	-	-	-	-	-	-	-	-	-	-	-	-			-
230.35.10 – Highway Planting Specifications	-	-	-	-	-	-	-	-	-	-	-	-	-	-	-	-	-	-			-
230.35.35 – Water Pollution Control Specs	-	-	-	-	-	-	-	-	23	-	-	-	-	-	-	-	-	23			-
230.35.40 – Erosion Control Specifications	-	-	-	-	-	-	-	-	-	-	-	-	-	40	-	-	-	40			-
230.35.99 – Other Draft Specificiation Products	-	-	-	-	-	-	-	-	-	-	-	-	-	80	-	-	-	80			-
230.60.05 – Updated Storm Water Data Report	-	-	-	-	-	-	-	-	5	-	-	-	-	-	-	-	-	5			-
230.60.10 – Other PS&E Reviews & Update PR	-	-	-	-	-	-	5	-	23	-	-	-	-	40	-	-	-	68			-
230.99 – Other Draft PS&E Products	-	-	-	-	-	-	-	-	-	-	-	-	-	-	-	-	-	-			-
Total Draft PS&E	-	-	-	-	-	-	-	-	-	-	-	-	-	-	-	-	-	-			-
Environmental Impact Mitigation and Hazardous Waste Clean-up - Task Management Actitivities																					
235.05.05 – Historical Structures Mitigation	-	-	-	-	-	-	-	-	-	-	-	-	-	-	-	-	-	-			-
235.05.10 – Archaeological & Cultural Mitigation	-	-	-	3	-	480	-	-	-	-	-	-	-	-	-	-	-	483			-
235.05.15 – Biological Mitigation	-	-	-	3	31	-	-	-	-	-	-	-	-	-	-	-	-	33			-
235.05.20 – Environmental Mitigation R/W Work	-	-	-	-	-	-	-	-	-	-	-	-	-	-	-	-	-	-			-
235.05.25 – Paleontology Mitigation	-	-	-	-	-	-	-	-	-	-	-	-	-	-	-	-	-	-			-
235.05.99 – Other Env. Mitigation Products	-	-	-	-	-	-	-	-	-	-	-	-	-	-	-	-	-	-			-
235.10.05 – Right or Permit for HW Site Inv.	-	-	-	-	-	-	-	-	-	-	-	-	-	-	-	-	-	-			-
235.10.10 – HW Sites Survey	-	-	-	-	-	-	-	-	-	-	-	-	-	-	-	-	-	-			-
235.10.15 – Detailed HW Site Investigation	-	-	-	-	-	-	73	-	-	-	-	-	-	-	-	-	-	73			-
235.15 – HW Management Plan	-	-	-	-	-	-	-	-	-	-	-	-	-	-	-	-	-	-			-
235.20 – HW PS&E	-	-	-	-	-	-	-	-	-	-	-	-	-	-	-	-	-	-			-
235.25 – HW Clean-up	-	-	-	-	-	-	-	-	-	-	-	-	-	-	-	-	-	-			-
235.30 – Certificate of Sufficiency	-	-	-	-	-	-	7	-	-	-	-	-	-	-	-	-	-	7			-
235.35 – Long Term Mitigation Monitoring	-	-	-	-	21	-	-	-	-	-	-	-	-	-	-	-	-	21			-
235.40 – Updated Environmental Commit. (ECR)	-	-	-	10	-	10	-	-	-	-	-	-	-	-	-	-	-	20			-
235.45 – NEPA Delegation	2	2	-	20	-	-	-	-	-	-	-	-	-	-	-	-	-	24			-
Total Env. Impact Mitigation & HW Clean-up	2	2	-	35	52	490	80	-	-	-	-	-	-	-	-	-	-	661			-

WBS Task Activity Code	Division Chief	Office Chief	Senior	Coord	Biology	Cultural	Haz Waste	Socio-Economic	Storm Water	Noise/Air	Sup Svcs	Design	Hydraulics	Landscape	Planning	Right of Way	Surveys	Total	Begin Date	End Date	Duration (Calendar Days)
Assigned Unit	177	157	173	173	173	174	349	170	349	174	183										
Post Right of Way Certification Work																					
245.55.20 – Right of Way Clearance	-	-	-	-	-	-	-	-	-	-	-	-	-	-	-	-	-	-			-
Total Post RW Clearance Work	-	-	-	-	-	-	-	-	-	-	-	-	-	-	-	-	-	-			-
Final District PS&E Package																					
255.05 – Circ. & Rev. Draft Dist PS&E	-	-	-	20	-	83	4	-	8	2	16	-	-	-	-	-	-	133			-
255.10.25 - Updated Technical Reports	-	-	-	-	-	-	-	-	4	-	-	-	-	40	-	-	-	44			-
255.15 – Environmental Reevaluation	-	-	-	10	-	347	-	-	-	-	-	-	-	-	-	-	-	357			-
255.20.05 – Rev. Plans for Drafting Stds. Comp	-	-	-	-	-	-	-	-	-	-	-	-	-	-	-	-	-	-			-
255.40 – Resident Engineer's Pending File	-	-	-	10	-	-	-	-	-	-	-	-	-	-	-	-	-	10			-
255.45 – NEPA Delegation	-	-	-	10	-	-	-	-	-	-	-	-	-	-	-	-	-	10			-
Total Final District PS&E Package	-	-	-	50	-	429	4	-	12	2	16	-	-	40	-	-	-	554			-
Contract Bid Documents "Ready to List"																					
260.75 - Env Cert at RTL	-	-	2	10	-	-	4	-	4	-	8	-	-	-	-	-	-	29			-
Total Contract Bid Documents "RTL"	-	-	2	10	-	-	4	-	4	-	8	-	-	-	-	-	-	29			-
Construction Engineering and General Contract Administration																					
270.15.50 – Miscellaneous Stakes	-	-	-	-	-	-	-	-	-	-	-	-	-	-	-	-	-	-			-
270.20.05 – Resident Engineer File Review	-	-	-	-	-	-	-	-	-	-	-	-	-	-	-	-	-	-			-
270.20.10 – Proj. Plans, Spec. Prov. & Est. Rev.	-	-	-	-	-	-	-	-	-	-	-	-	-	-	-	-	-	-			-
270.20.45 – Cont. WPCP Review	-	-	-	-	-	-	-	-	15	-	-	-	-	-	-	-	-	15			-
270.20.50 – Technical Support	-	-	-	-	-	-	-	-	-	2	200	-	-	40	-	-	-	242			-
270.25.15 – Pre-Construction Meeting	-	-	-	-	-	-	-	-	-	-	5	-	-	-	-	-	-	5			-
270.30.10 – Inspection of Const. Work for Comp.	-	-	-	-	-	-	-	-	-	-	8	-	-	-	-	-	-	8			-
270.55 – Final Inspection & Acceptance Recom.	-	-	-	-	-	-	-	-	-	-	8	-	-	-	-	-	-	8			-
270.70 – Updated ECR	-	-	-	12	-	-	-	-	-	-	2	-	-	-	-	-	-	14			-
270.75 – Resource Agency Permit Ren. & Ext.	-	-	-	-	-	-	-	-	-	-	2	-	-	-	-	-	-	2			-
270.80 – Long Term Env Mit/Mont during Const	-	-	-	-	-	-	-	-	-	-	2	-	-	-	-	-	-	2			-
Total Const Engineering & Gen. Contract Admin.	-	-	-	12	-	-	-	-	15	2	227	-	-	40	-	-	-	295			-
Construction Contract Change Orders																					
285.05.05 – Need for CCO Determination	-	-	-	-	-	-	1	-	1	-	2	-	-	-	-	-	-	3			-
285.10.15 – "Other" Functional Support	-	-	-	-	-	-	12	-	15	-	2	-	-	12	-	-	-	41			-
Total Construction CCOs	-	-	-	-	-	-	13	-	15	-	4	-	-	12	-	-	-	44			-
Construction Contract Claims																					
290.35 – Techinical Support	-	-	-	-	-	-	-	-	-	-	2	-	-	-	-	-	-	2			-
Total Construction Contract Claims	-	-	-	-	-	-	-	-	-	-	2	-	-	-	-	-	-	2			-
Contract Acceptance, Final Construction Estimate and Final Report																					
295.35 – Certificate of Environmental Compliance	-	-	-	10	-	41	-	-	-	-	10	-	-	-	-	-	-	61			-
295.40 – Long Term Env Mit/Mont after CCA	-	-	-	-	-	-	-	-	-	-	-	-	-	-	-	-	-	-			-
Total Final Construction	-	-	-	10	-	41	-	-	-	-	10	-	-	-	-	-	-	61			-
Total Project Hours	99	113	272	1,689	1,152	5,385	260	648	178	229	423	-	-	316	-	-	-	10,704			-

Form Updated 8.28.08

Attachment D: PEAR Environmental Commitments Cost Estimate (Standard PSR)

Attachment D: PEAR Environmental Commitments Cost Estimate

Standard PSR Only

(Prepare a separate form for each viable alternative described in the Project Study Report)

PART 1 PROJECT INFORMATION *rev. 11/08*

District-County-Route-Post Mile 01-MEN-1-42.5/43.3	EA: 01-40140K
Project Description: Salmon Creek Bridge Replacement and Highway Realignment.	
Form completed by (Name/District Office): Denise Gibson / District 3 -Marysville	
Project Manager: Mike Yancheff	Phone Number: (707) 441-2097
Date: April 1, 2009	

PART 2 PERMITS AND AGREEMENTS

	Permits and Agreements ($$)
☒ Fish and Game 1602 Agreement	4000
☒ Coastal Development Permit	0
☐ State Lands Agreement	0
☒ Section 401 Water Quality Certification	5000
☒ Section 404 Permit – Nationwide (U.S. Army Corps)	0
☐ Section 404 Permit – Individual (U.S. Army Corps)	0
☐ Section 10 Navigable Waters Permit (U.S. Army Corps)	0
☐ Section 9 Permit (U.S. Coast Guard)	0
☒ Other: Section 7 FESA	0
Total (enter zeros if no cost)	9000

PART 3. ENVIRONMENTAL COMMITMENTS FOR PERMANENT IMPACTS

To complete the following information:

- Report costs in $1,000s.
- Include all costs to complete the commitment:
  - Capital outlay and staff support. Refer to Estimated Resources by WBS Code. For example, if you estimated 80 hours for biological monitoring (WBS 235.35 Long Term Mitigation Monitoring), convert those hours to a dollar amount for this entry. For current conversion rates from PY to dollars, see the Project Manager.
  - Cost of right of way or easements.
  - If compensatory mitigation is anticipated (for wetlands, for example), insert a range for purchasing credits in a mitigation bank.
  - Long-term monitoring and reporting
  - Any follow-up maintenance
  - Use current costs; the Project Manager will add an appropriate escalation factor.
  - This is an estimating tool, so a range is not only acceptable, but advisable.

Environmental Commitments Alternative All (1-4)		
	Estimated Cost in $1,000's	Notes
Noise abatement or mitigation	0	
Special landscaping	0	
Archaeological resources	700	If needed (Phase 1.5/2)
Biological resources	300	Purple Martin Bird Exclusion - $50,000. Also if restoration is needed for the following resources based on federal consultation - FESA Salmonid - $50,000 Tidewater goby -$50,000 Behren's siversport butterfly - $50,000-$100,000
Historical resources	0	
Scenic resources	0	
Wetland/riparian resources	280	
Res./bus. relocations	0	
Other: Cultural	700	Cultural mitigation, if needed
Total (enter zeros if no cost)	1980	

ATTACHMENT N

PROGRAMMING SHEET

PROGRAMMING SHEET

Project Manager:	MIKE YANCHEFF	01-MEN-001 PM R43.0/R43.1
		EA 01-40140K
Date:	25-Aug-09	201.110 SHOPP

PROJECT SCHEDULE

MILESTONE	DATE
Begin Environmental Document (M020)	9/1/2010
Begin Project Report (M040) (Begin Design of Project)	7/1/2010
Circulate Environmental Document (M120)	6/1/2014
Project Approval & Environmental Document (M200)	10/1/2014
District Submits Bridge Site Data to Structures (M221)	2/1/2015
Right of Way Maps (M224)	2/1/2015
Regular Right of Way (M225)	3/1/2015
District Plans, Specifications & Estimates to DOE(M377)	4/1/2016
Draft Structures Plans, Specifications & Estimate (M378)	5/1/2016
Project Plans, Specifications & Estimate (M380)	7/1/2016
Right of Way Certification (M410)	1/1/2017
Ready to List (M460)	1/15/2017
HQ Advertise (M480)	4/1/2017
Approve Construction Contract (M500)	7/15/2017
Contract Acceptance (M600)	8/1/2019

Escalation Factors Used: Capital: 3.5%
Support:1.5%

2009 COSTS
Const: $ 44,210
R/W: $ 2,969

PROJECT COSTS BY SB45 CATEGORY

Costs are in thousands of dollars

CAPITAL COSTS	09/10	10/11	11/12	12/13	13/14	14/15	FUTURE	TOTAL
Right of Way	$ -	$ -	$ -	$ -	$ -	$ -	$ 4,279	$ 4,279
Construction	$ -	$ -	$ -	$ -	$ -	$ -	$ 55,041	$ 55,041
							CAPITAL TOTAL	$ 59,320
SUPPORT COSTS								
Environmental	$ -	$ 635	$ 696	$ 708	$ 826	$ 840	$ 688	$ 4,392
Design	$ -	$ -	$ -	$ -	$ 172	$ 2,684	$ 2,737	$ 5,593
Right of Way	$ -	$ -		$ -	$ -	$ 267	$ 481	$ 748
Construction	$ -	$ -	$ -	$ -	$ -	$ -	$ 4,320	$ 4,320
							SUPPORT COSTS	$ 15,053
							TOTAL PROJECT COSTS	$ 74,373
							SUPPORT TO CAPITAL RATIO/%	25%
	$ -	$ -	$ -	$ -	$ -	$ -	$ -	$ -

SUPPORT PY'S by DIVISION
Number of Hours in a PY: 1758

PROJECT SUPPORT IN PYS

	09/10	10/11	11/12	12/13	13/14	14/15	FUTURE	TOTAL
Transportation Planning	0.00	1.72	2.04	2.03	2.86	4.42	3.09	16.15
District Design	0.00	2.19	2.24	2.24	3.05	12.63	11.16	33.5
Right of Way	0.00	0.07	0.07	0.07	0.08	0.71	2.80	3.8
District Construction	0.00	0.01	0.01	0.01	0.03	0.12	7.23	7.4
DES Design	0.00	0.14	0.14	0.14	0.20	3.82	10.29	14.7
DES Construction	0.00	0.01	0.01	0.01	0.01	0.04	10.44	10.5
TOTAL	0.00	4.14	4.51	4.50	6.23	21.74	45.02	86.1

Comments: