State of California
DEPARTMENT OF TRANSPORTATION

Business, Transportation and Housing Agency

Memorandum

Flex your power!
Be energy efficient!

To: **NASAR FORMOLI**
Chief, Design Branch S-1
Office of Design South
NR Div of Engineering
District 3

Date: October 31, 2012
File: 03-Sac-5-PM 16.70
I-5 HOV Project
Various Structures
EA: 03-3C0000

Attn: Jerry Cagle

From: **JOSEPH E. DOWNING**
Chief
Bridge Design Branch 3
Office of Bridge Design West
Division of Engineering Services

Subject: Updated Cost Estimate

Below please find the updated cost estimate for the Advance Planning Study (APS) package previously prepared by this office for the above mentioned project.

Please contact Eric Burgeson, Structures Project Engineer, at (916) 227-8446 if you may have any questions or concerns.

The updated estimate, including 5% time-related overhead, 8% mobilization and 25% contingencies, are as follows:

3C0000 I-5 HOV/WIDENING SUMMARY OF STRUCTURE COSTS				
Structure Name	Structure No.	Description	Previous Estimate (5/9/2011)	**Updated Cost Estimate**
Sutterville Rd O.C.	24-0256	Remove abutment slope	$ 2,356,000	$ 2,267,000
Gloria Drive O.C.	24-0258	Remove abutment slope	$ 648,000	$ 570,000
Beach Lake Bridge	24-0262R/L	Widen Structure to Median	$ 2,989,000	$ 3,069,000
Rte 5/160 Sep & O.H.	24-02296R/L	Widen Structure to Median	$ 5,245,000	$ 5,605,000
Casilada Ped O.C. Alternative 1	24-0254	Replace Structure	$ 3,832,000	$ 3,478,000
Casilada Ped O.C. Alternative 2	24-0254	Replace Structure		$ 2,769,000
Land Park UP	24-0226	Modify Slope Paving		$ 57,000

Escalated Budget Estimate to Assumed Midpoint of Construction

Years Beyond Midpoint	Escalation Rate	Sutterville Rd OC	Gloria Drive OC	Beach Lake Bridge	Rte5-160 SEP OH	Casilada Pedestrian OC Alt 1	Casilada Pedestrian OC Alt 1
1	2.3%	$2,320,000	$583,000	$3,139,000	$5,734,00	$3,558,000	$2,833,000
2	3.0%	$2,390,000	$600,000	$3,233,000	$5,906,000	$3,665,000	$2,915,000
3	4.0%	$2,486,000	$624,000	$3,362000	$6,142,000	$3,812,000	$3,017,000
4	3.8%	$2,580,000	$648,000	$3,490,000	$6,375,000	$3,957,000	$3,123,000
5	2.7%	$2,650,000	$665,000	$3,584,000	$6,547,000	$4,064,000	$3,195,000

Years Beyond Midpoint	Escalation Rate	Land Park UP
1	2.3%	$58,000
2	2.9%	$60,000
3	3.5%	$62,000
4	3.5%	$64,000
5	2.3%	$65,000

STATE OF CALIFORNIA - DEPARTMENT OF TRANSPORTATION - DIVISION OF STRUCTURES

DIST	COUNTY	ROUTE	POST MILE
03	Sac	5	20.53

Caltrans now has a web site! To get to the web site, go to: http://www.dot.ca.gov

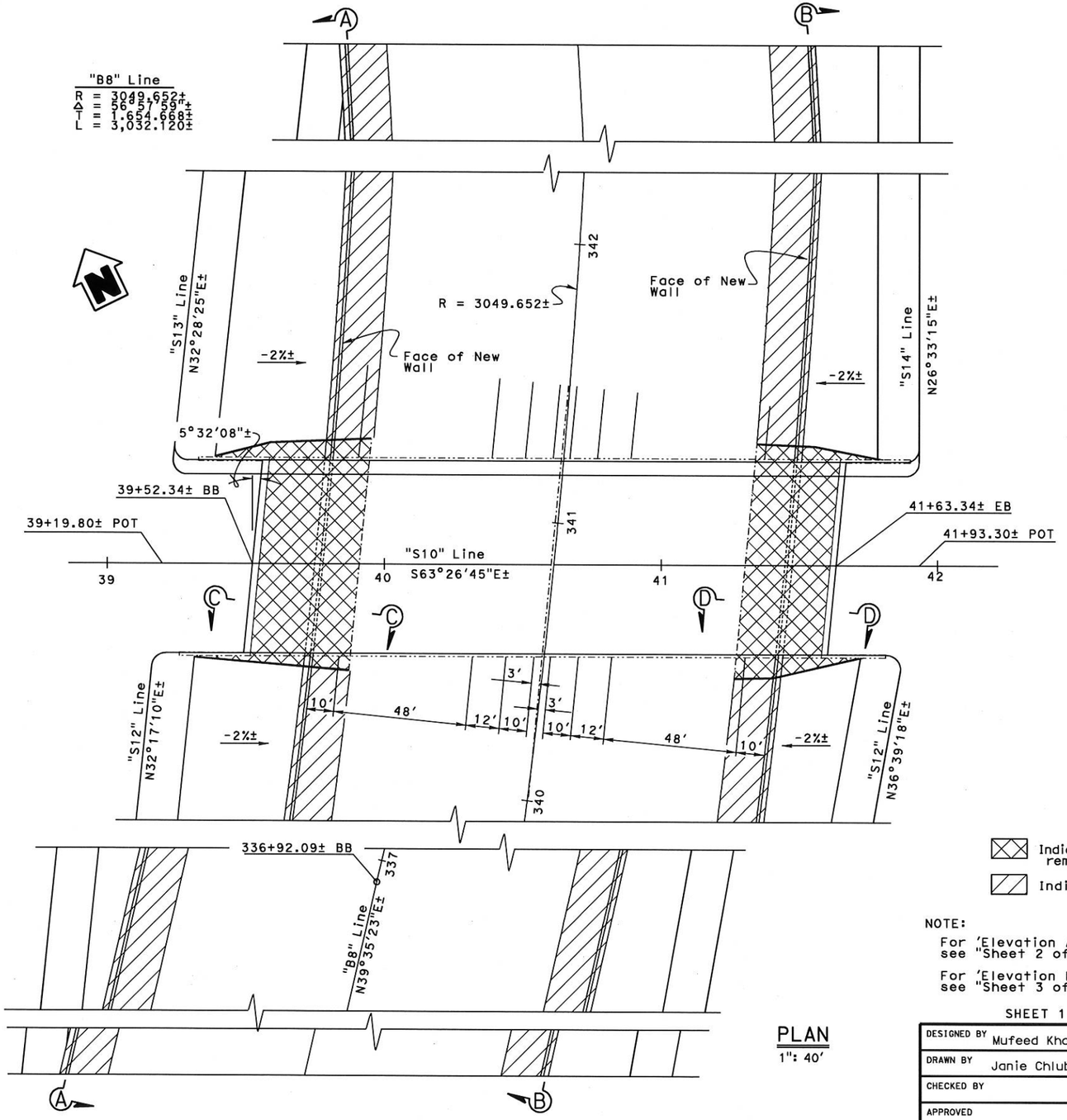

PLAN
1": 40'

Indicates Slope Paving removal and excavation

Indicates excavation

NOTE:

For 'Elevation A' and 'Section C-C' see "Sheet 2 of 3"

For 'Elevation B' and 'Section D-D' see "Sheet 3 of 3"

SHEET 1 OF 3

DESIGNED BY Mufeed Khalaf	DATE 12-1-05	STRUCTURE DESIGN BRANCH 3
DRAWN BY Janie Chlubna	DATE 12-1-05	
CHECKED BY	DATE	
APPROVED	DATE	

PLANNING STUDY

SUTTERVILLE ROAD OVERCROSSING (WIDEN)

BRIDGE NO. 24-0256	CU 03
SCALE: As Shown	EA 3C000k

USERNAME => s136540 DATE PLOTTED => 24-JAN-2013 TIME PLOTTED => 11:39

STRUCTURES DESIGN ADVANCE PLANNING STUDY SHEET (ENGLISH) (REV.2/4/05)

FILE => 03-3c000k-sutterville.dgn

STATE OF CALIFORNIA - DEPARTMENT OF TRANSPORTATION - DIVISION OF STRUCTURES

DIST	COUNTY	ROUTE	POST MILE
03	Sac	5	20.53

Caltrans now has a web site! To get to the web site, go to: http://www.dot.ca.gov

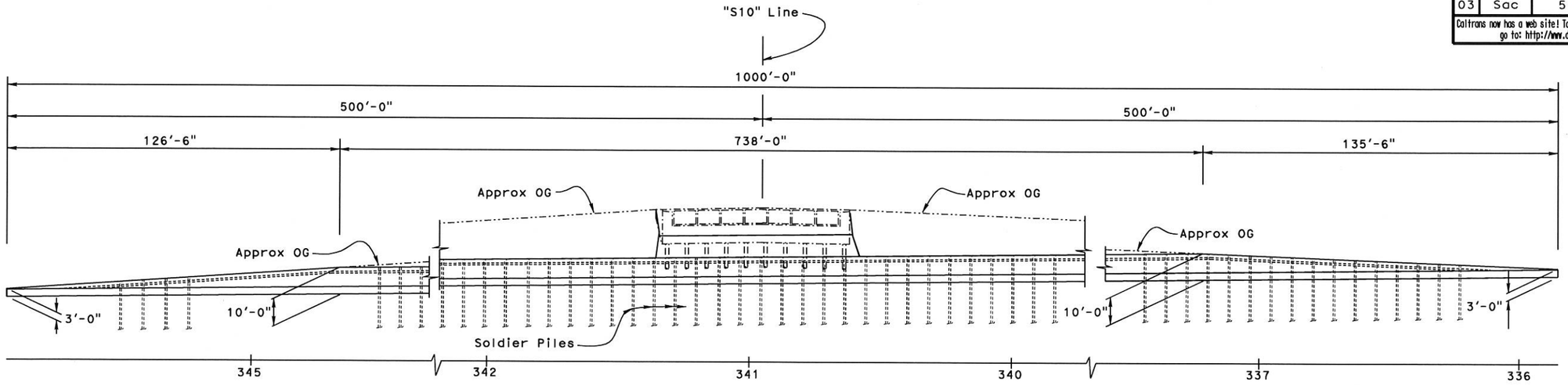

ELEVATION A-A
1" : 40'

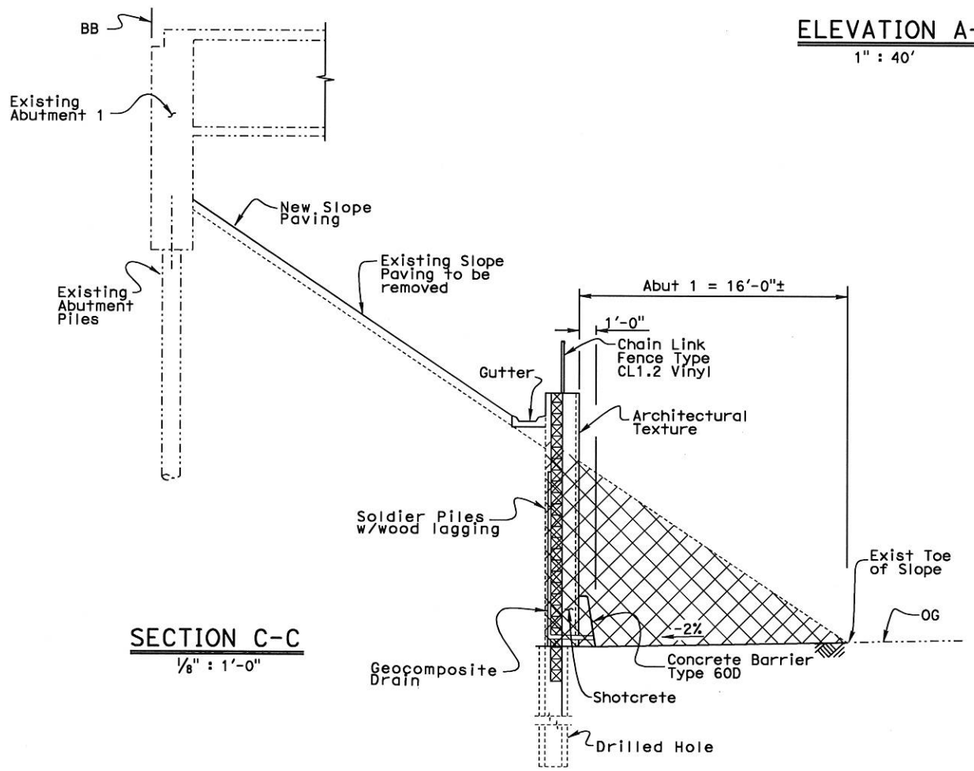

SECTION C-C
1/8" : 1'-0"

NOTE:
For location of 'Elevation A-A' and 'Section C-C' see "Planning Study (Sheet 1 of 3)"

Indicates Slope Paving removal and excavation

SHEET 2 OF 3

DESIGNED BY	Mufeed Khalaf	DATE	12-1-05
DRAWN BY	Janie Chlubna	DATE	12-1-05
CHECKED BY		DATE	
APPROVED		DATE	

STRUCTURE DESIGN BRANCH 3

PLANNING STUDY

SUTTERVILLE ROAD OVERCROSSING (WIDEN)

BRIDGE NO. 24-0256	CU 03
SCALE: As Shown	EA 3C000k

USERNAME => s136540 DATE PLOTTED => 24-JAN-2013 TIME PLOTTED => 11:39

STRUCTURES DESIGN ADVANCE PLANNING STUDY SHEET (ENGLISH) (REV.2/4/05)

FILE => 03-3c000k-sutterville-abut1.dgn

STATE OF CALIFORNIA - DEPARTMENT OF TRANSPORTATION - DIVISION OF STRUCTURES

DIST	COUNTY	ROUTE	POST MILE
03	Sac	5	20.53

Caltrans now has a web site! To get to the web site, go to: http://www.dot.ca.gov

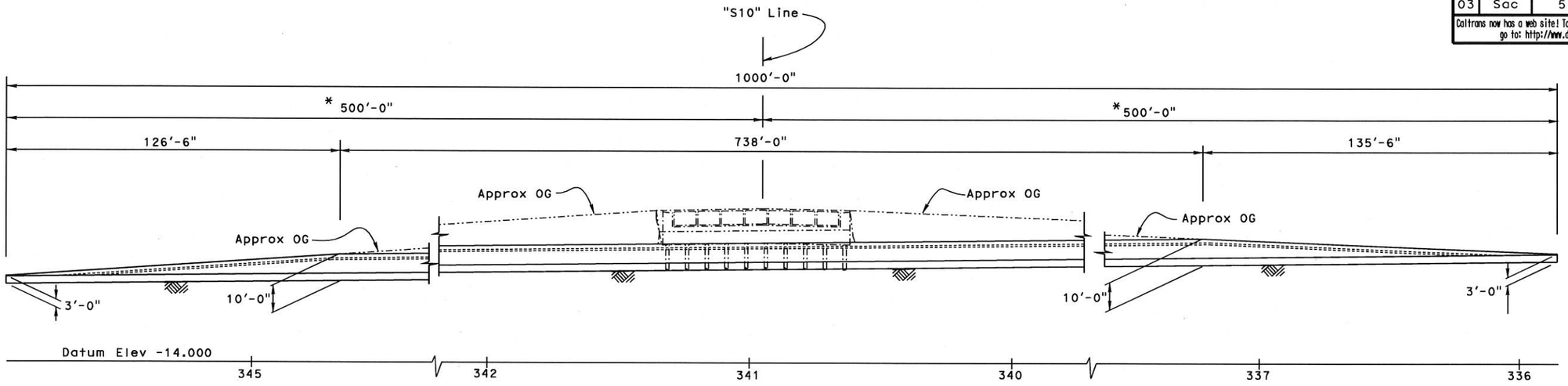

ELEVATION B-B

1" : 40'

* Tiebacks to be placed between existing abutment piles.

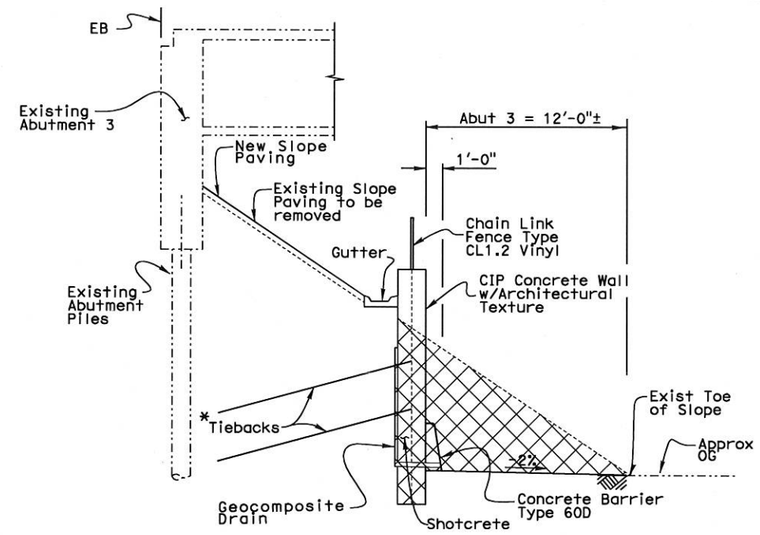

SECTION D-D

1/8" : 1'-0"

NOTE:

For location of 'Elevation B-B' and 'Section D-D' see "Planning Study (Sheet 1 of 3)"

Indicates Slope Paving removal and excavation

SHEET 3 OF 3

DESIGNED BY Mufeed Khalaf	DATE 12-1-05	STRUCTURE DESIGN BRANCH 3	PLANNING STUDY
DRAWN BY Janie Chlubna	DATE 12-1-05		SUTTERVILLE ROAD OVERCROSSING (WIDEN)
CHECKED BY	DATE		BRIDGE NO. 24-0256 / CU 03
APPROVED	DATE		SCALE: As Shown / EA 3C000k

USERNAME => s136540 DATE PLOTTED => 24-JAN-2013 TIME PLOTTED => 11:40

STRUCTURES DESIGN ADVANCE PLANNING STUDY SHEET (ENGLISH) (REV.2/4/05)

FILE => 03-3c000k-sutterville-abut3.dgn

STATE OF CALIFORNIA - DEPARTMENT OF TRANSPORTATION - DIVISION OF STRUCTURES

DIST	COUNTY	ROUTE	POST MILE
03	Sac	5	18.19

Caltrans now has a web site! To get to the web site, go to: http://www.dot.ca.gov

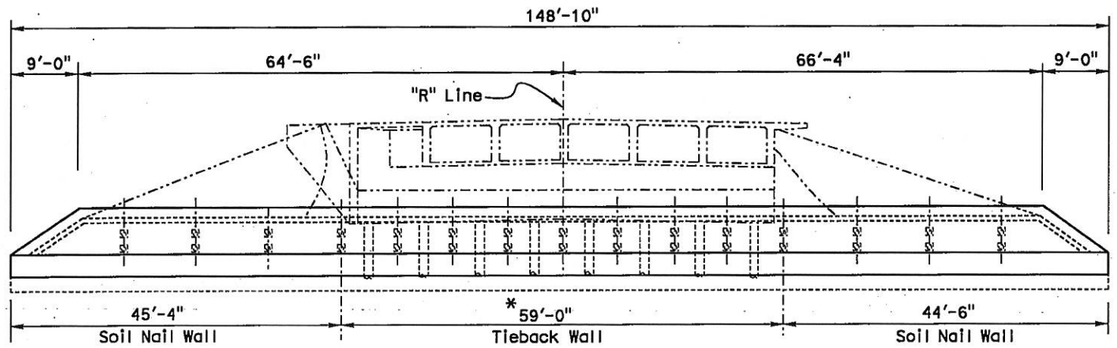

ELEVATION A-A

1": 20'

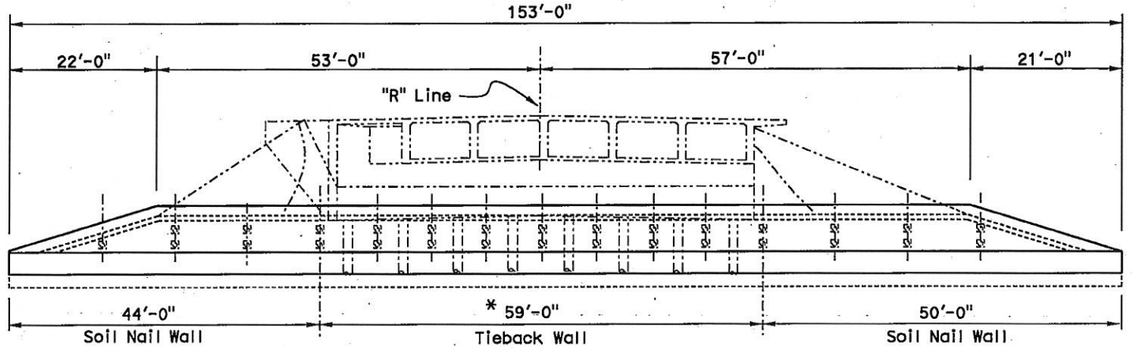

ELEVATION B-B

1": 20'

* Tiebacks to be placed between the existing abutment piles.

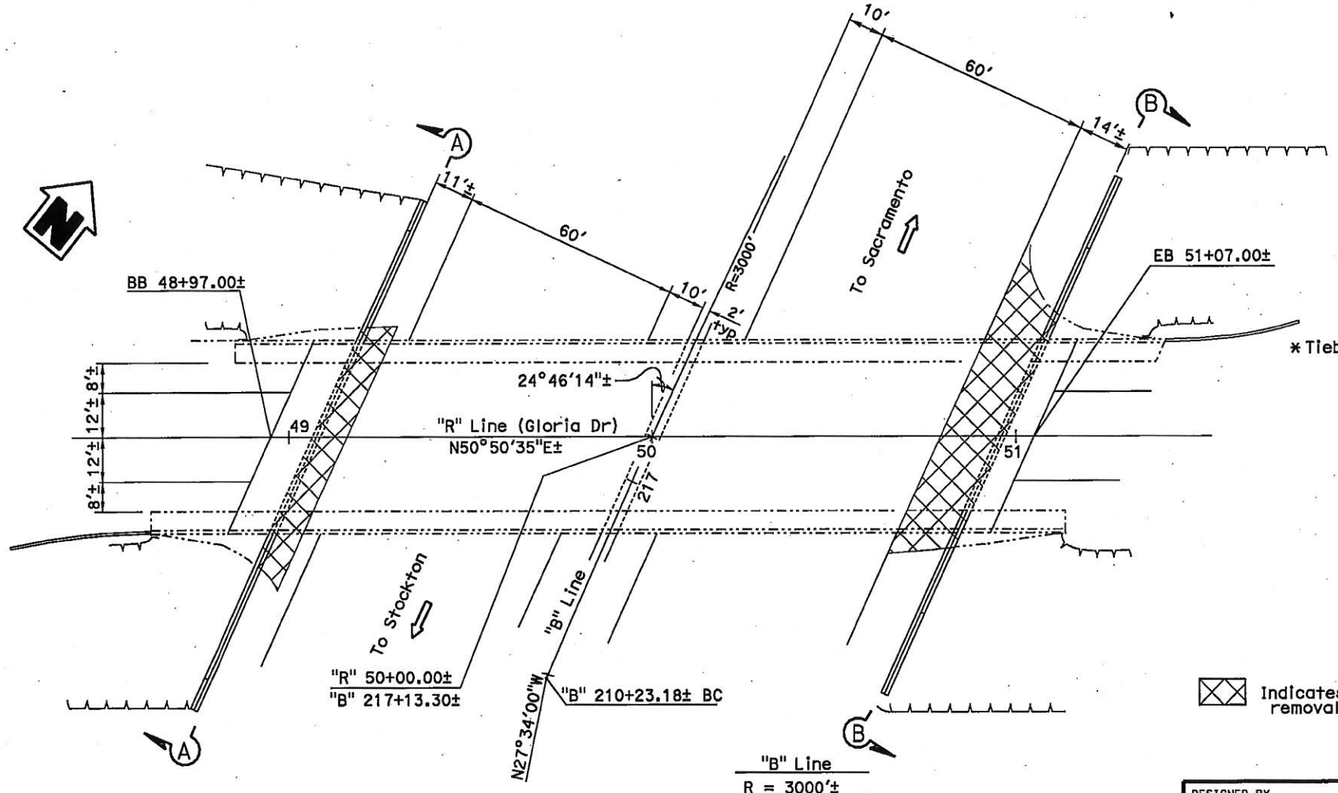

PLAN

1": 40'

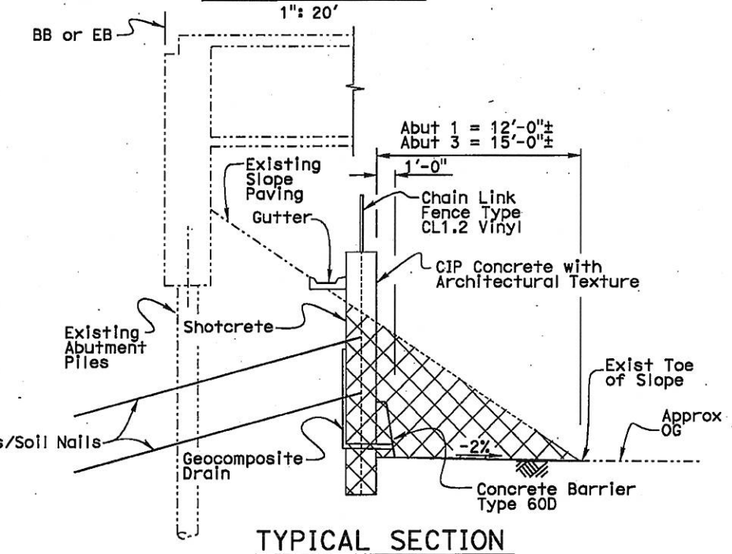

TYPICAL SECTION

1/8" : 1'-0"

Indicates Slope Paving removal and excavation

DESIGNED BY Mufeed Khalaf	DATE 12-1-05	STRUCTURE DESIGN BRANCH 3	PLANNING STUDY
DRAWN BY Janie Chiubna	DATE 12-1-05		GLORIA DRIVE OC (WIDEN)
CHECKED BY X	DATE X		BRIDGE NO. 24-0258 / CU 03
APPROVED X	DATE X		SCALE: As Shown / EA 3C000k

USERNAME => s136540 DATE PLOTTED => 24-JAN-2013 TIME PLOTTED => 13:22

STRUCTURES DESIGN ADVANCE PLANNING STUDY SHEET (ENGLISH) (REV.2/4/05)

FILE => 03-3c000k-24-0258-gloria2-english.dgn

STATE OF CALIFORNIA - DEPARTMENT OF TRANSPORTATION - DIVISION OF STRUCTURES

DIST	COUNTY	ROUTE	POST MILE
03	Sac	5	

To get to the Caltrans web site, go to: http://www.dot.ca.gov

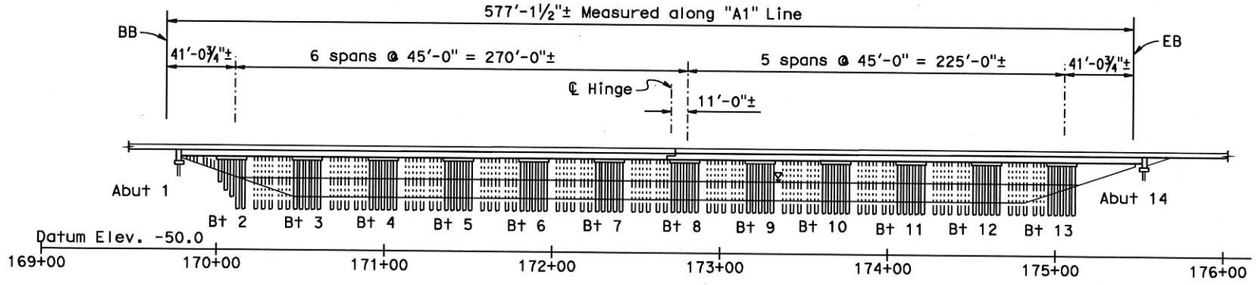

ELEVATION A-A
1"=40'

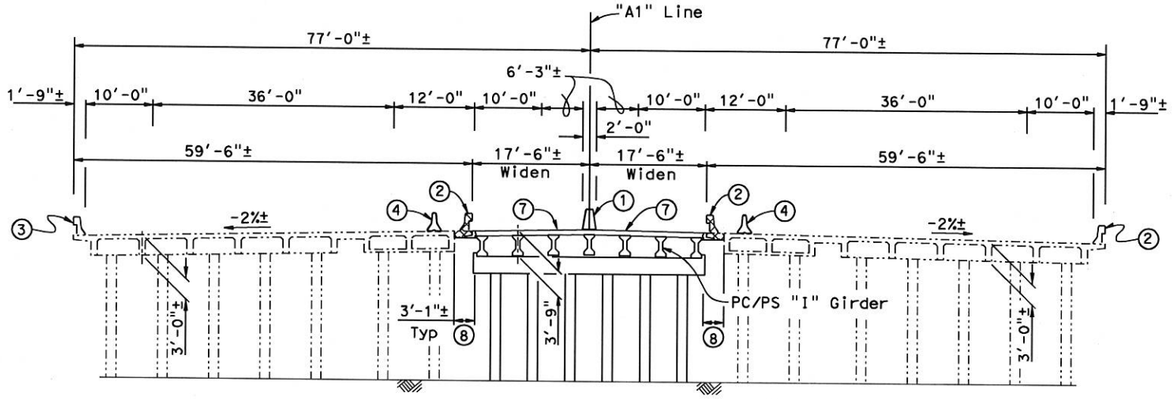

TYPICAL SECTION
1"=10'

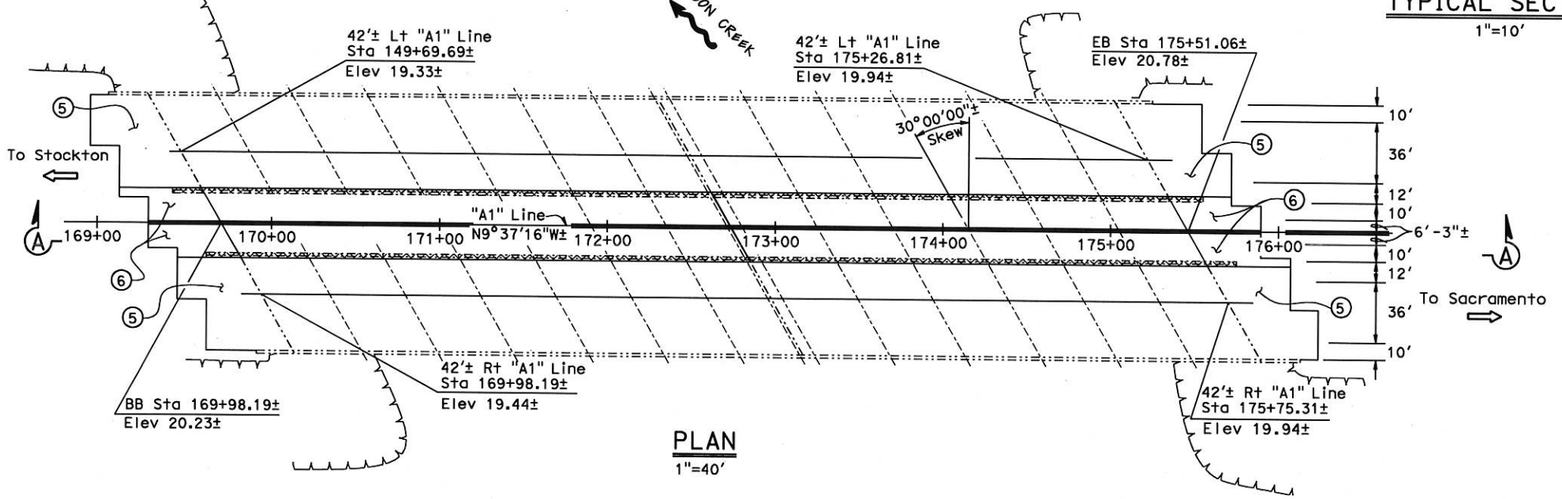

PLAN
1"=40'

NOTES:

- Indicates Bridge Removal
- (1) Concrete Barrier Type 60
- (2) Remove Existing Concrete Barrier Type 25
- (3) Existing Concrete Barrier Type 25R
- (4) Temporary Railing (Type K), see "ROAD PLANS"
- (5) Structure Approach Type R(30D)
- (6) Structure Approach Type N(30D)
- (7) Match Existing Slope
- (8) Closure Pour

DESIGNED BY Eric G Burgeson	DATE 6-24-08	STRUCTURE DESIGN BRANCH 3	PLANNING STUDY
DRAWN BY SZheng/JChiubna	DATE 6-24-08		BEACH LAKE BRIDGE (WIDEN)
CHECKED BY X	DATE X		BRIDGE NO. 24-0262 R/L | CU 03
APPROVED X	DATE X		SCALE: As Shown | EA 3C0000

FILE => 24-0262-aps.dgn

USERNAME => s136540 DATE PLOTTED => 24-JAN-2013 TIME PLOTTED => 11:35

STRUCTURES DESIGN ADVANCE PLANNING STUDY SHEET (ENGLISH) (REV. 10/25/05)

STATE OF CALIFORNIA - DEPARTMENT OF TRANSPORTATION - DIVISION OF STRUCTURES

DIST	COUNTY	ROUTE	POST MILE
03	Sac	5	15.6

Caltrans now has a web site! To get to the web site, go to: http://www.dot.ca.gov

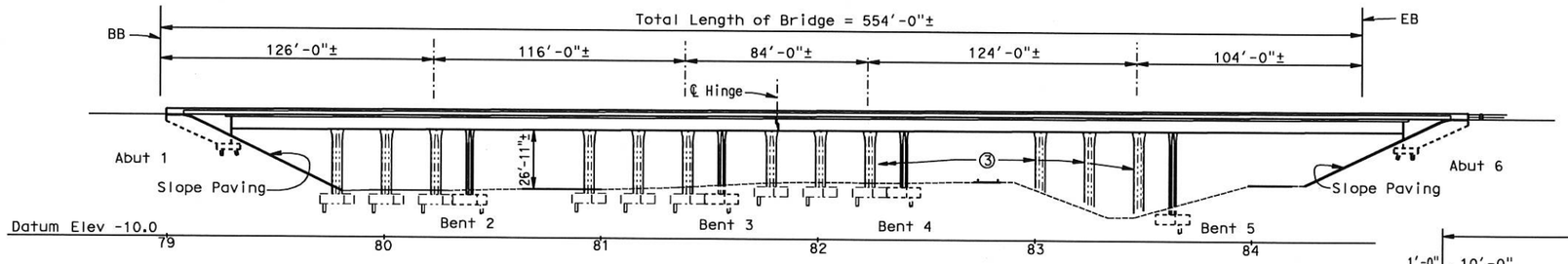

ELEVATION A - A

1" = 60'

Notes:

① - Structure Approach Type N(30S)
② - Structure Approach Type R(30S)
③ - Steel Column Casing on existing
④ - Remove exist MBGR
⑤ - New MBGR

Traffic will pass through construction falsework opening required

✳ - The railroad appears abondoned. No falsework opening is required over the railroad, but the permanent structure will maintain the current min vertical clearance over the railroad tracks

▨ - Indicates concrete removal

-·-·- - Indicates existing

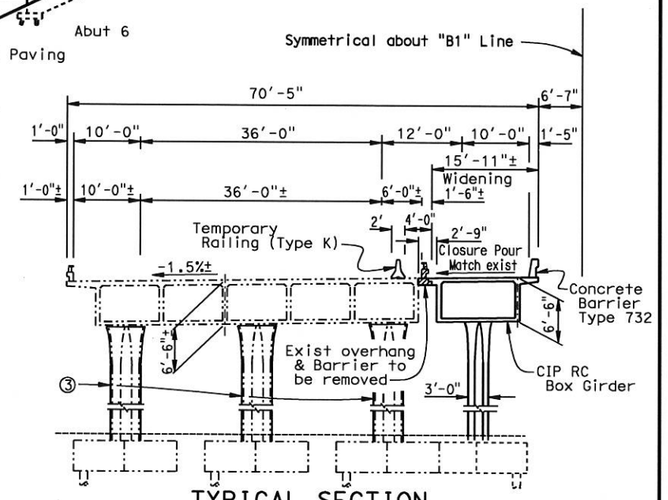

TYPICAL SECTION

1" = 20'

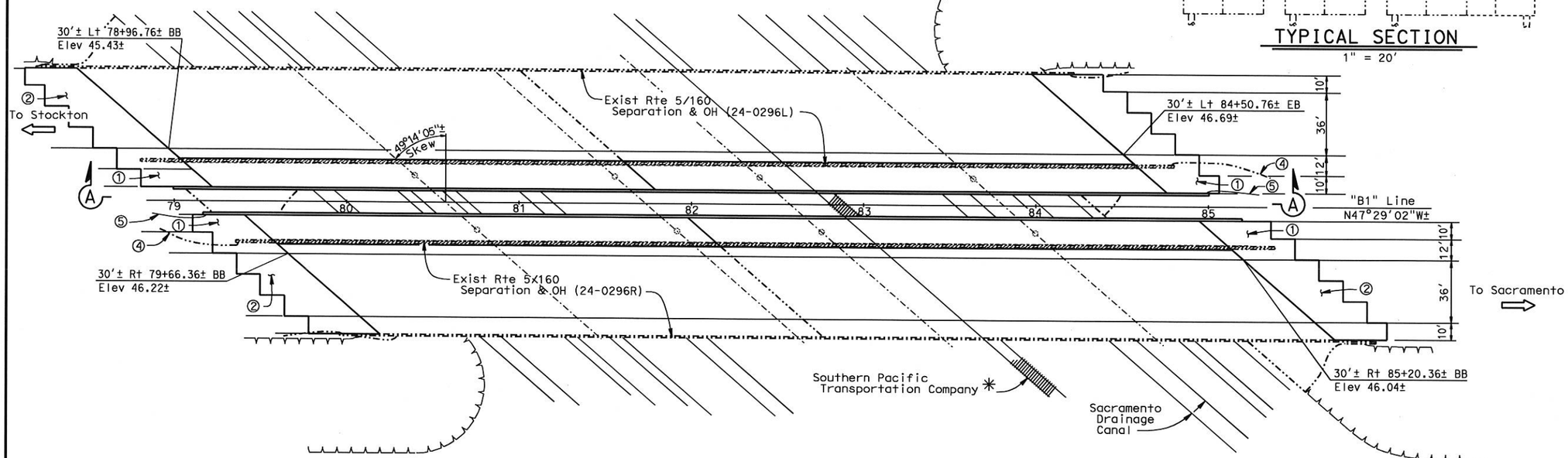

PLAN

1" = 60'

ALTERNATIVE NO. 1

DESIGNED BY Mufeed Khalaf	DATE 11-17-05	STRUCTURE DESIGN BRANCH 3	PLANNING STUDY
DRAWN BY Nancy C Gwynn	DATE 11-17-05		ROUTE 5/160 SEP & OH (WIDEN)
CHECKED BY	DATE		BRIDGE NO. 24-0296 R/L — CU 03
APPROVED	DATE		SCALE: as noted — EA 3C000K

STRUCTURES DESIGN ADVANCE PLANNING STUDY SHEET (ENGLISH) (REV.2/4/05)

FILE => 03-3c000k-24-0296-rte5-160a.dgn

USERNAME => s136540 DATE PLOTTED => 24-JAN-2013 TIME PLOTTED => 11:08

STATE OF CALIFORNIA - DEPARTMENT OF TRANSPORTATION - DIVISION OF STRUCTURES

DIST	COUNTY	ROUTE	POST MILE
03	Sac	5	15.6

Caltrans now has a web site! To get to the web site, go to: http://www.dot.ca.gov

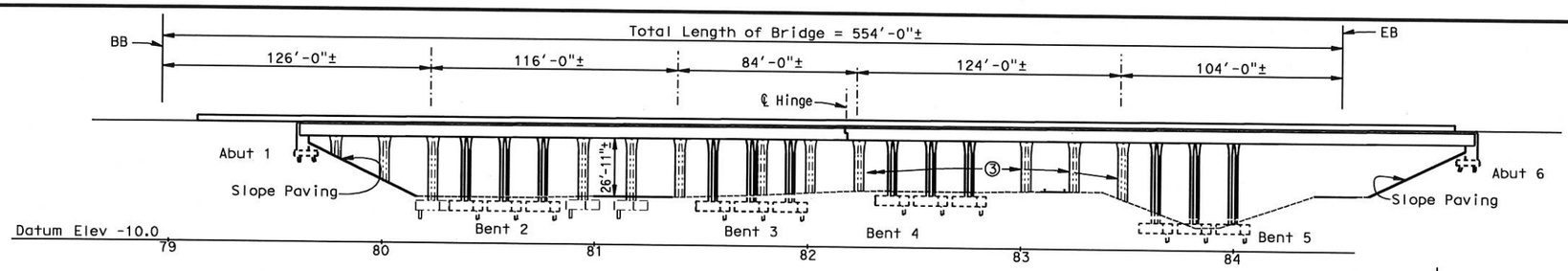

ELEVATION A - A

1" = 60'

Notes:

① - Structure Approach Type N(30S)
② - Structure Approach Type R(30S)
③ - Steel Column Casing on existing
④ - Remove exist MBGR

Traffic will pass through construction falsework opening required

✳ - The railroad appears abondoned. No falsework opening is required over the railroad, but the permanent structure will maintain the current min vertical clearance over the railroad tracks

▨ - Indicates concrete removal

---- - Indicates existing

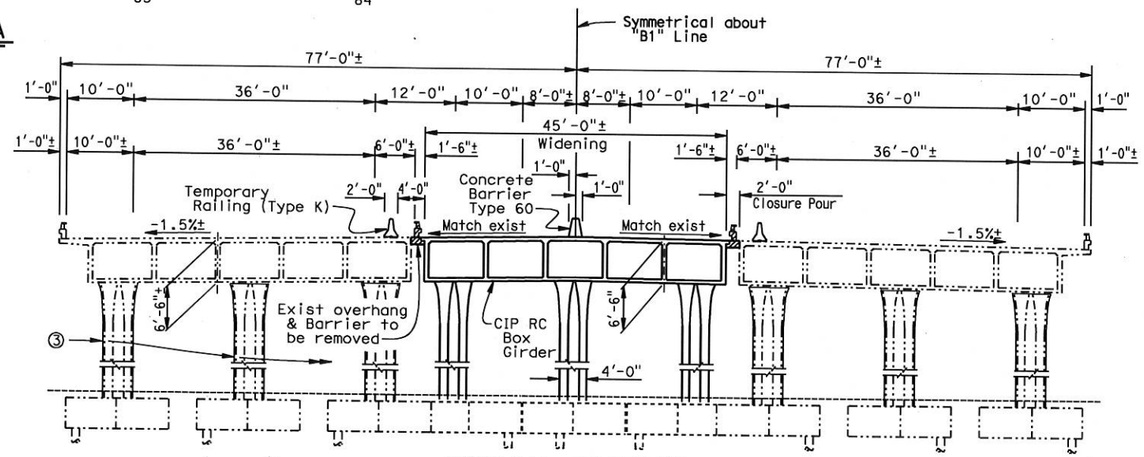

TYPICAL SECTION

1" = 20'

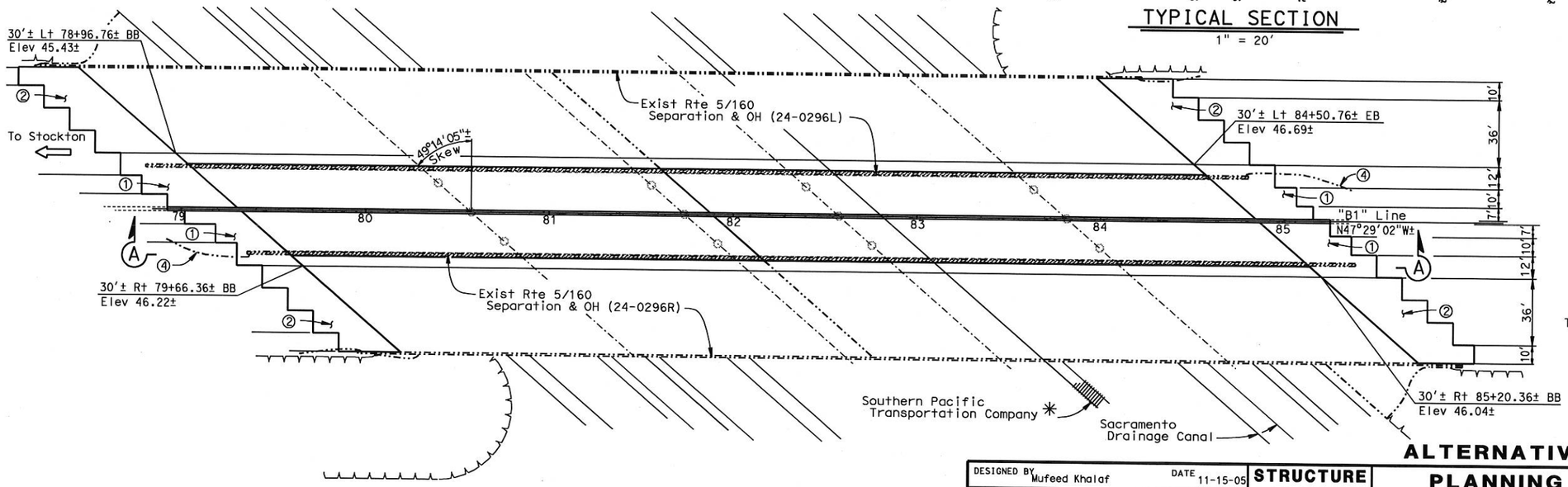

PLAN

1" = 60'

ALTERNATIVE NO. 2

DESIGNED BY Mufeed Khalaf	DATE 11-15-05	STRUCTURE DESIGN BRANCH 3	PLANNING STUDY
DRAWN BY Nancy C Gwynn	DATE 11-15-05		RTE 5/160 SEP & OH (WIDEN)
CHECKED BY	DATE		BRIDGE NO. 24-0296 R/L — CU 03
APPROVED	DATE		SCALE: as noted — EA 3C000K

USERNAME => s136540 DATE PLOTTED => 24-JAN-2013 TIME PLOTTED => 11:08

STRUCTURES DESIGN ADVANCE PLANNING STUDY SHEET (ENGLISH) (REV.2/4/05)

FILE => 03-3c000k-24-0296-rte5-160b.dgn

STATE OF CALIFORNIA - DEPARTMENT OF TRANSPORTATION - DIVISION OF STRUCTURES

DIST	COUNTY	ROUTE	POST MILE
03I	Sac	5	19.30

Caltrans now has a web site! To get to the web site, go to: http://www.dot.ca.gov

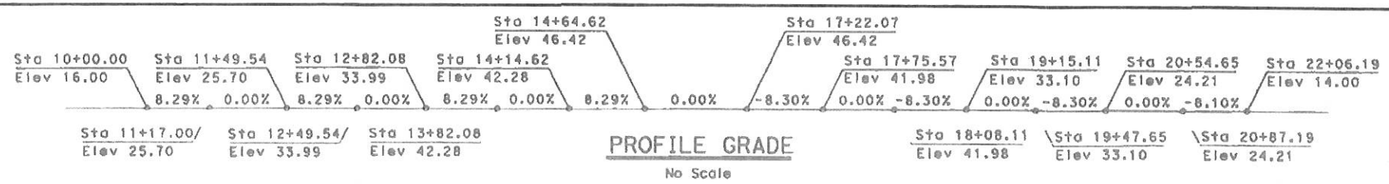

PROFILE GRADE

No Scale

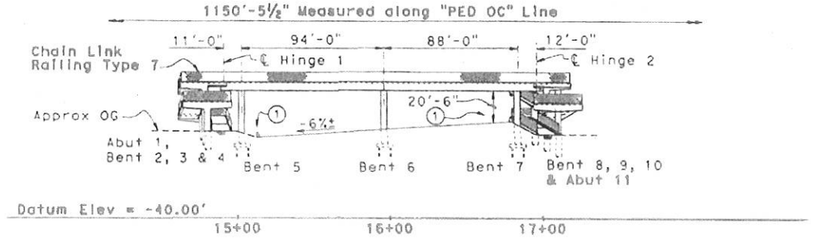

ELEVATION

1"=40'

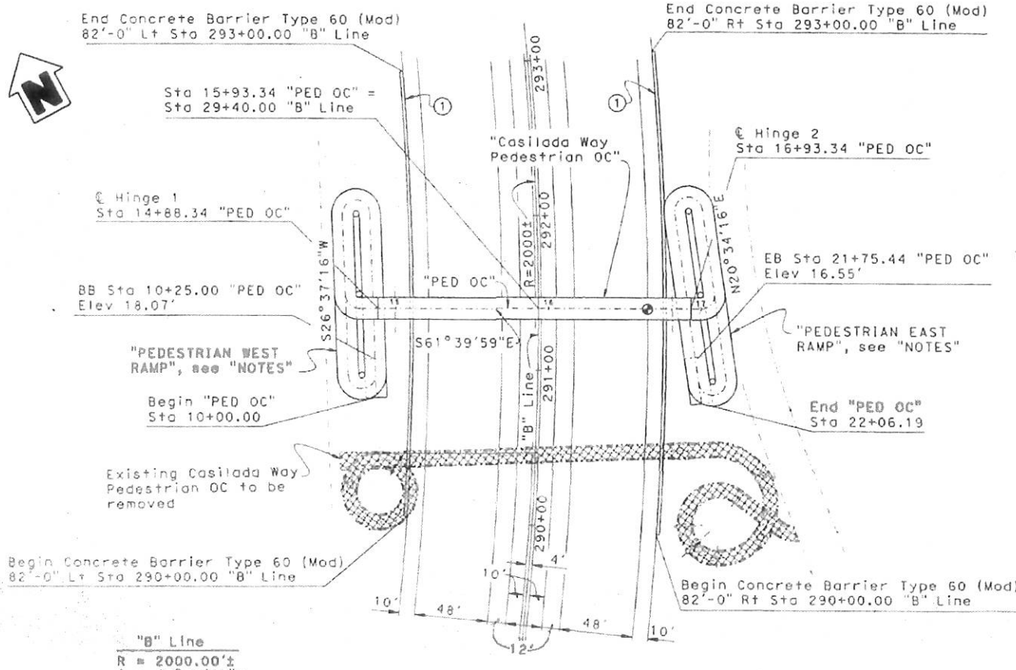

"B" Line
R = 2000.00'±
Δ = 36°29'55"±
T = 659.47'±
L = 1274.04'±

PLAN

1" = 40

ASSUMPTIONS

1. Locations of the proposed "Ped OC" Ramp entrance/egress have been maintained in the general location of the existing structure.
2. Ramp lengths were determined based on allowable maximum slopes, ground elevations and required "Ped OC" deck elevation.
3. As-Built ground elevations at the existing structure were used, as no current survey information was available.
4. The "Ped OC" elevation was determined based on a minimum vertical clearance of two feet greater than required for vehicle structures and assumption No. 3 stated above.
5. A level (0% slope) profile was used at the "Ped OC".
6. A 6% super elevation for Rte I-5 underneath the "Ped OC" was used.
7. Locations of the "Ped OC" ramps were determined from scaling of the aerial photograph provided with the original APS request package.
8. Profile Grade and Horizontal Alignment Geometry and Data were developed by DES Structures Design.
9. District to verify R/W (Temporary & Permanent) Profile Grade, Alignment and ADA requirements.
10. No Aesthetic recommendations at this time.

NOTES:

For details on "PEDESTRIAN WEST RAMP" and "PEDESTRIAN EAST RAMP", see "SHEET 2 of 4"

For "TYPICAL SECTION" views see "SHEET 4 of 4"

Indicates Existing Structure

Indicates New Structure

Indicates Removal of Existing Structure

① Concrete Barrier Type 60 (Mod)

② Point of Minimum Vertical Clearance

PEDESTRIAN WEST RAMP

DATE OF ESTIMATE	=	- -
BRIDGE REMOVAL	=	See Below
STRUCTURE DEPTH	=	2'-2"
LENGTH	=	463'-4¼"
WIDTH	=	14'-2"
AREA	=	6563.98 ft²

PEDESTRIAN OVERCROSSING

DATE OF ESTIMATE	=	- -
BRIDGE REMOVAL	=	See Below
STRUCTURE DEPTH	=	4'-6"
LENGTH	=	205'-0"
		14'-2"
AREA	=	2904.41 ft²

PEDESTRIAN EAST RAMP

DATE OF ESTIMATE	=	- -
BRIDGE REMOVAL	=	See Below
STRUCTURE DEPTH	=	2'-2"
LENGTH	=	482'-1¼"
WIDTH	=	14'-2"
AREA	=	6829.75 ft²

COST/ ☐ft INCLUDING 10% MOBILIZATION & 25% CONTINGENCY	=	$270.10
TOTAL COST	=	$4,616,000
Exist Ped OC Removal	=	$50,000

SHEET 1 of 4

DESIGNED BY	Eric Burgeson	DATE	1-28-08
DRAWN BY	Janie Chlubno	DATE	1-28-08
CHECKED BY		DATE	
APPROVED		DATE	

STRUCTURE DESIGN BRANCH 3

ALTERNATIVE 1A

PLANNING STUDY

CASILADA WAY PEDESTRIAN OVERCROSSING (REPLACE)

BRIDGE NO. 24-0254	CU 03
SCALE: As Shown	EA 3C0000

STRUCTURES DESIGN ADVANCE PLANNING STUDY SHEET (ENGLISH) REV.2/4/05)

FILE =\ 24-0253-ped-aps01.dgn

TIME PLOTTED

USERNAME =\ hgwyman

STATE OF CALIFORNIA - DEPARTMENT OF TRANSPORTATION DIVISION OF STRUCTURES

DIST.	COUNTY	ROUTE	POST MILE
03	Sac	5	19.30

Caltrans now has a web site! To get to the web site, go to: http://www.dot.ca.gov

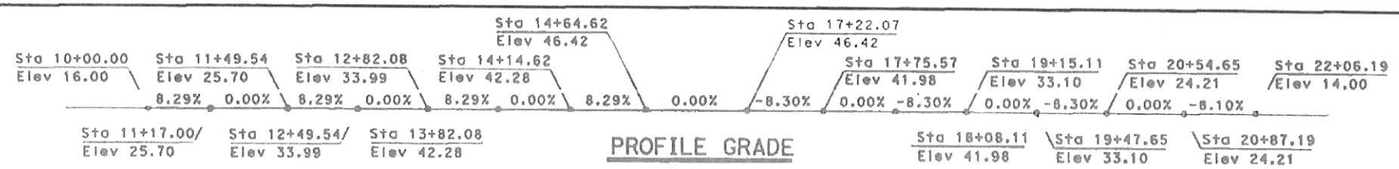

PROFILE GRADE

No Scale

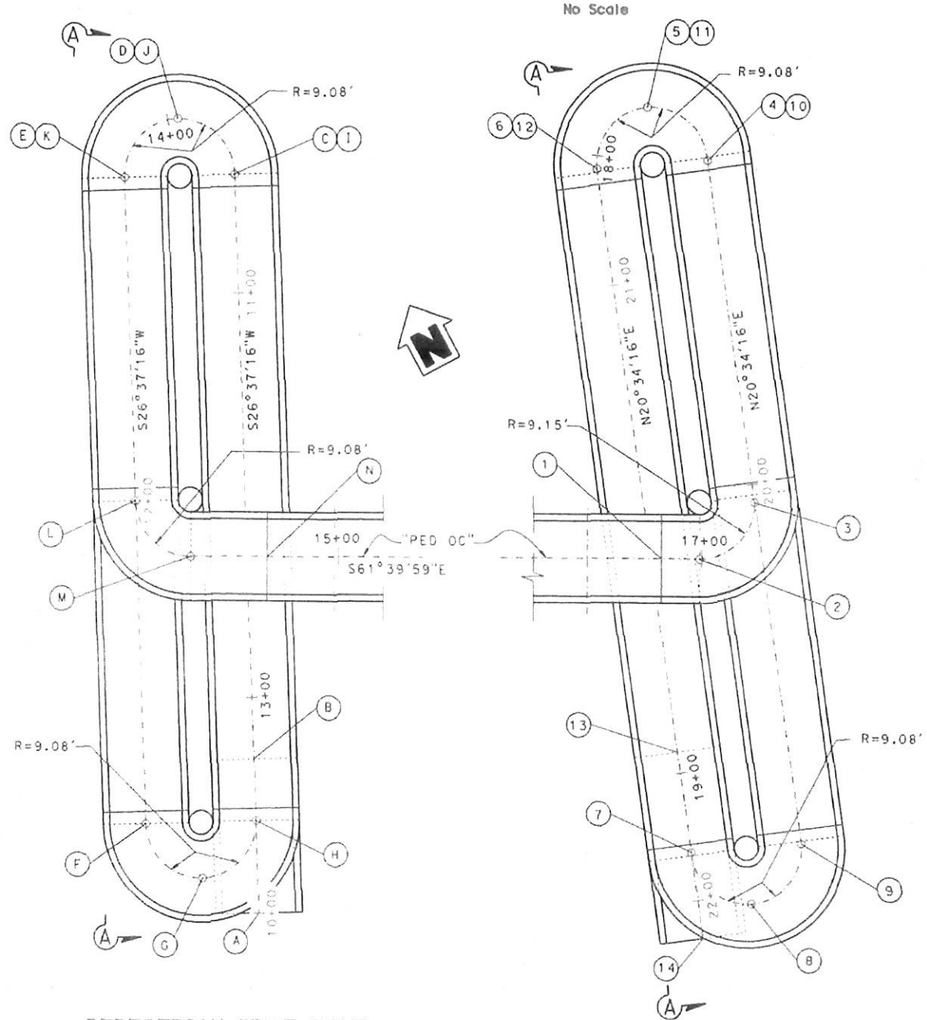

PEDESTRIAN WEST RAMP

1" = 10'

PEDESTRIAN EAST RAMP

1" = 10'

NOTE:

For "ELEVATION" view, see "SHEET 1 OF 4"

For "ELEVATION A-A", see "SHEET 3 OF 4"

(A) Begin "Ped OC" Sta 10+00.00
102.77' Lt Sta 290+79.25 "B" Line
Elev 16.00'

(B) Begin Structure BB Sta 10+25.00= Begin Pedestrian West Ramp "Ped OC"

(C) BC Sta 11+19.00 "Ped OC" (1)

(D) PCC Sta 11+33.27 "Ped OC" (2)

(E) EC Sta 11+47.54 "Ped OC"

(F) BC Sta 12+51.54 "Ped OC" (3)

(G) PCC Sta 12+67.41 "Ped OC" (4)

(H) EC Sta 12+80.08 "Ped OC"

(I) BC Sta 13+84.08 "Ped OC" (5)

(J) PCC Sta 13+98.35 "Ped OC" (6)

(K) EC Sta 14+12.62 "Ped OC"

(L) BC Sta 14+64.62 "Ped OC" (7)

(M) EC Sta 14+78.62 "Ped OC"

(N) ℄ Hinge 1 Sta 14+88.34 "Ped OC"
= End Pedestrian West Ramp
= Begin Casilada Way Pedestrian OC

(1) ℄ Hinge 2 Sta 16+93.34 "Ped OC"
= End Casilada Way Pedestrian OC
= Begin Pedestrian East Ramp

(2) BC Sta 17+02.52 "Ped OC" (8)

(3) EC Sta 17+18.07 "Ped OC"

(4) BC Sta 17+73.57 "Ped OC" (9)

(5) PCC Sta 17+87.84 "Ped OC" (10)

(6) EC Sta 18+02.11 "Ped OC"

(7) BC Sta 19+13.11 "Ped OC" (11)

(8) PCC Sta 19+27.38 "Ped OC" (12)

(9) EC Sta 19+41.64 "Ped OC"

(10) BC Sta 20+02.65 "Ped OC" (13)

(11) PCC Sta 20+66.92 "Ped OC" (14)

(12) EC Sta 20+81.19 "Ped OC"

(13) End Structure EB Sta 21+75.44 "Ped OC"
= End Pedestrian East Ramp

(14) End "Ped OC" Sta 22+06.19 "Ped OC"
Elev 14.00'

"Ped" West Ramp Curves (1) thru (6)

R = 9.08'
Δ = 90°00'00"
T = 9.08'
L = 14.27'

"Ped" West Ramp Curve (7)

R = 9.08'
Δ = 88°17'14"
T = 8.82'
L = 14.00'

"Ped" East Ramp Curve (8)

R = 9.15'
Δ = 97°22'32"
T = 10.41'
L = 15.55'

"Ped" East Ramp Curves (9) thru (14)

R = 9.08'
Δ = 90°00'00"
T = 9.08'
L = 14.27'

SHEET 2 of 4

DESIGNED BY Eric Burgeson	DATE 1-28-08	STRUCTURE DESIGN BRANCH 3	ALTERNATIVE 1A
DRAWN BY Janie Chiubna	DATE 1-28-08		PLANNING STUDY
CHECKED BY	DATE		CASILADA WAY PEDESTRIAN OVERCROSSING (REPLACE)
APPROVED	DATE		BRIDGE NO. 24-0254 / CU 03
			SCALE: As Shown / EA 3C0000

FILE => 24-0253-ped-ope02.dgn

USERNAME => ngwynn

STATE OF CALIFORNIA - DEPARTMENT OF TRANSPORTATION - DIVISION OF STRUCTURES

DIST	COUNTY	ROUTE	POST MILE
03	Sac	5	19.30

Caltrans now has a web site! To get to the web site, go to: http://www.dot.ca.gov

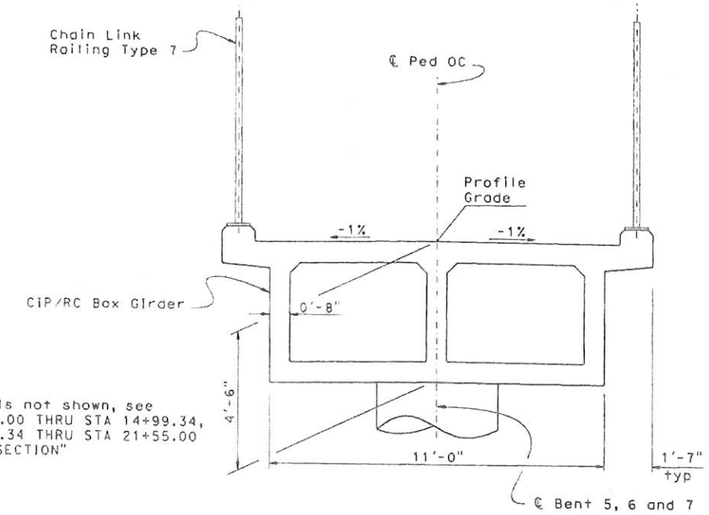

NOTE:
For details not shown, see STA 10+45.00 THRU STA 14+99.34, STA 16+93.34 THRU STA 21+55.00 "TYPICAL SECTION"

STA 14+88.34 THRU STA 16+93.34

TYPICAL SECTION

½" = 1'-0"

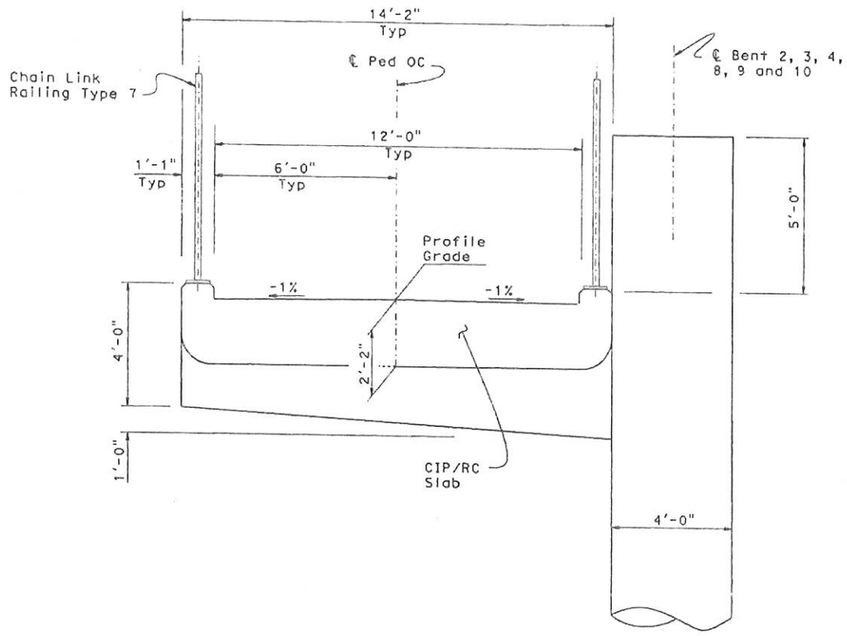

STA 10+45.00 THRU STA 14+99.34
STA 16+93.34 THRU STA 21+55.00

TYPICAL SECTION

½" = 1'-0"

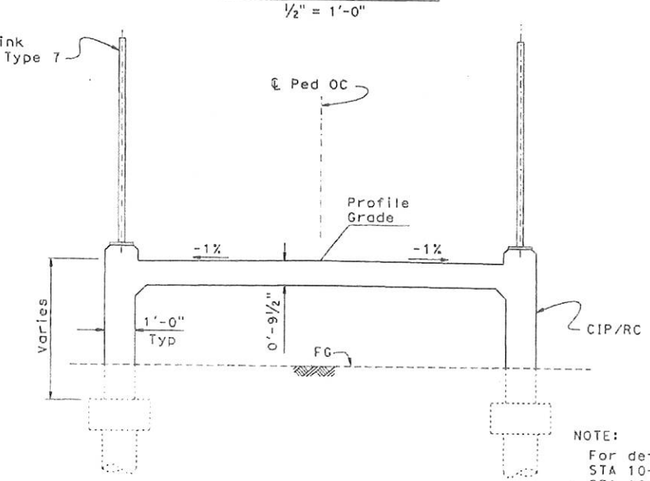

NOTE:
For details not shown, see STA 10+45.00 THRU STA 14+99.34, STA 16+93.34 THRU STA 21+55.00 "TYPICAL SECTION"

STA 10+25.00 THRU STA 10+45.00
STA 21+55.00 THRU STA 21+75.44

TYPICAL SECTION

½" = 1'-0"

SHEET 4 of 4

DESIGNED BY Eric Burgeson	DATE 1-28-08	STRUCTURE DESIGN BRANCH 3	ALTERNATIVE 1A
DRAWN BY Janie Chlubna	DATE 1-28-08		PLANNING STUDY
CHECKED BY	DATE		CASILADA WAY PEDESTRIAN OVERCROSSING (REPLACE)
APPROVED	DATE		BRIDGE NO. 24-0254 / CU 03
			SCALE: As Shown / EA 3C0000

FILE => 24-0253-ped-ops04.dgn

USERNAME => ngwynn DATE PLOTTED => 15-FEB-2008 TIME PLOTTED => 08:36

STRUCTURES DESIGN ADVANCE PLANNING STUDY SHEET (ENGLISH) (REV.2/4/05)

STATE OF CALIFORNIA - DEPARTMENT OF TRANSPORTATION - DIVISION OF STRUCTURES

DIST	COUNTY	ROUTE	POST MILE
03	Sac	5	20.8

Caltrans now has a web site! To get to the web site, go to: http://www.dot.ca.gov

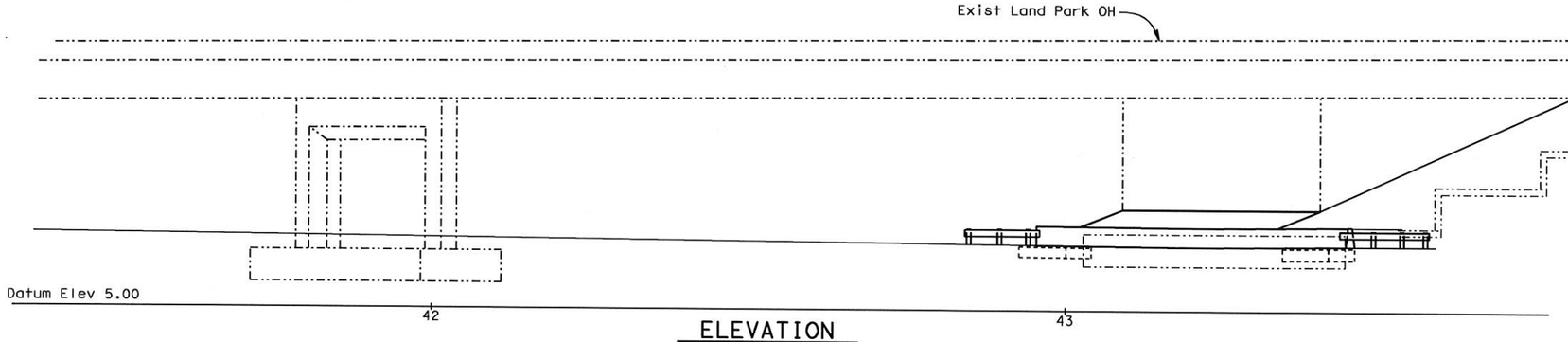

ELEVATION
1" = 20'

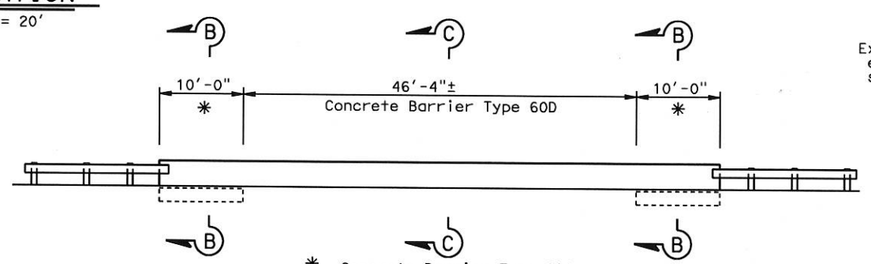

*- Concrete Barrier Type 60A

ELEVATION A - A
1/8" = 1'

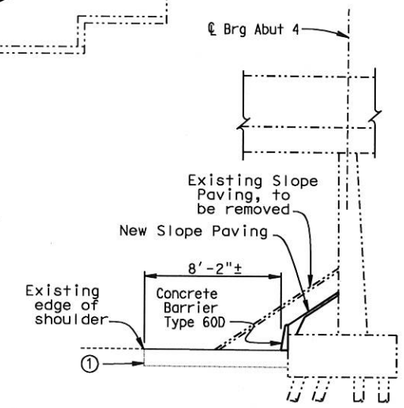

SECTION C - C
1/8" = 1'

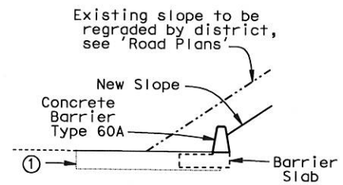

SECTION B - B
1/8" = 1'

① - Roadway pavement design by District, see 'Road Plans'

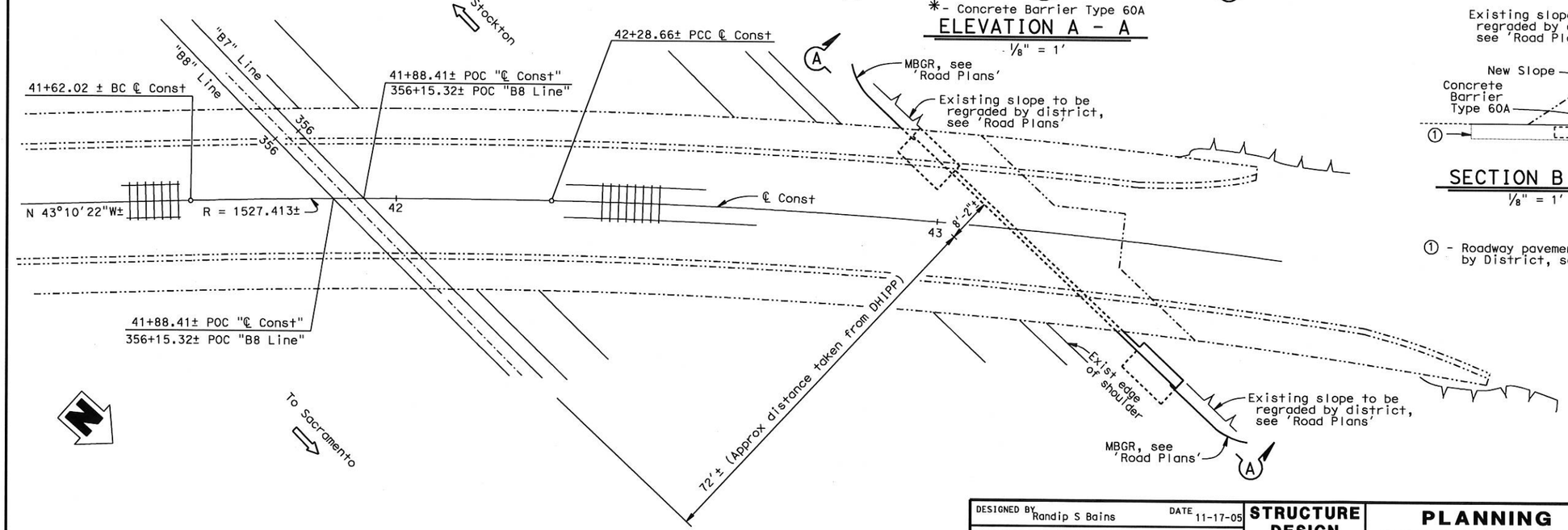

PLAN
1" = 20'

DESIGNED BY Randip S Bains	DATE 11-17-05	STRUCTURE DESIGN BRANCH 3	PLANNING STUDY
DRAWN BY Nancy C Gwynn	DATE 11-17-05		LAND PARK UNDERPASS
CHECKED BY	DATE		BRIDGE NO. 24-0226 / CU 03
APPROVED	DATE		SCALE: as noted / EA 3C000K

FILE => 03-3c000k-24-0226-landpk.dgn

USERNAME => s136540 DATE PLOTTED => 24-JAN-2013 TIME PLOTTED => 11:15

STRUCTURES DESIGN ADVANCE PLANNING STUDY SHEET (ENGLISH) (REV.2/4/05)