Dist	COUNTY	ROUTE	POST MILES TOTAL PROJECT	SHEET No.	TOTAL SHEETS

REGISTERED CIVIL ENGINEER DATE

PLANS APPROVAL DATE

REGISTERED PROFESSIONAL ENGINEER No. Exp. CIVIL STATE OF CALIFORNIA

THE STATE OF CALIFORNIA OR ITS OFFICERS OR AGENTS SHALL NOT BE RESPONSIBLE FOR THE ACCURACY OR COMPLETENESS OF SCANNED COPIES OF THIS PLAN SHEET.

NOTES:

1. DIMENSIONS OF THE PAVEMENT STRUCTURES (STRUCTURAL SECTIONS) ARE SUBJECT TO THE TOLERANCES SPECIFIED IN THE STANDARD SPECIFICATIONS.
2. SUPERELEVATION AS SHOWN OR AS DIRECTED BY THE ENGINEER.
3. FOR LOCATIONS OF HMA DIKE SEE LAYOUT SHEETS.

DESIGN DESIGNATION (Rte 222)

2010 ADT = 3055 D = 60%
2030 ADT = 4957 T = 18.0%
DHV = 714 V = 60 MPH
TI = 11.5
ESAL = 8,000,000
CLIMATE REGION = NORTH COAST

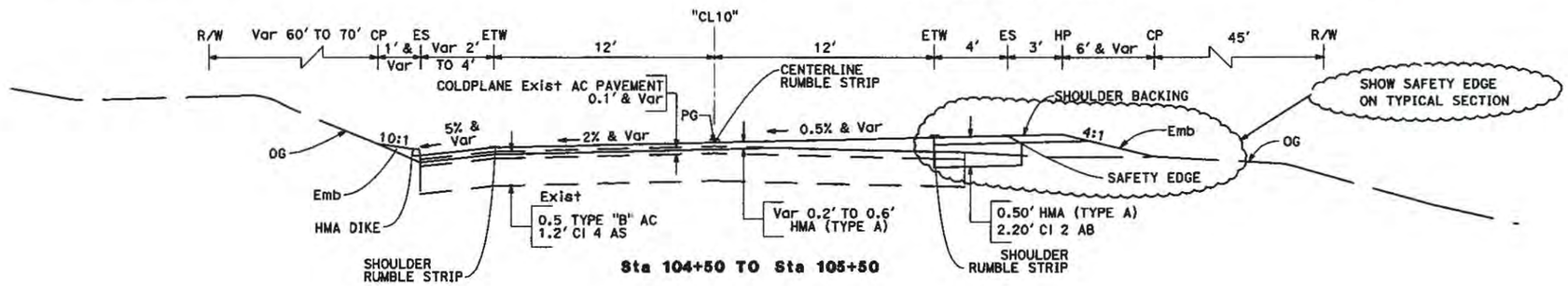

Sta 104+50 TO Sta 105+50

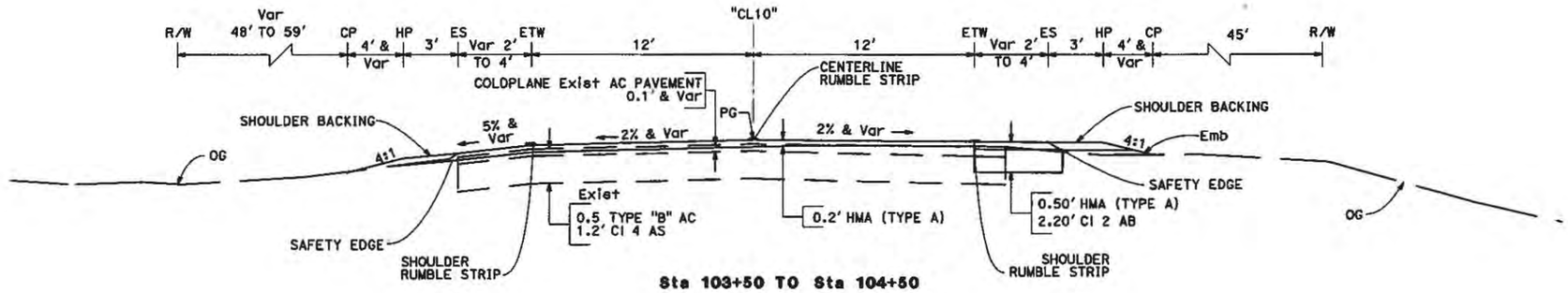

Sta 103+50 TO Sta 104+50

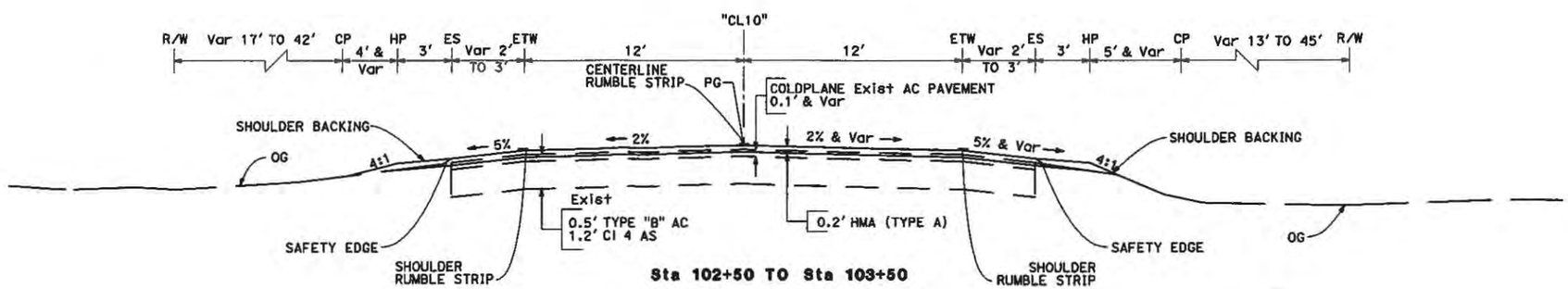

Sta 102+50 TO Sta 103+50
Sta 123+50 TO Sta 124+50

ROUTE 222

TYPICAL CROSS SECTIONS

NO SCALE

X-1

REVISED BY	DATE REVISED

CALCULATED-DESIGNED BY	CHECKED BY

FUNCTIONAL SUPERVISOR

STATE OF CALIFORNIA - DEPARTMENT OF TRANSPORTATION

Caltrans

LAST REVISION 00-00-00 DATE PLOTTED => #DATE TIME PLOTTED => #TIME

BORDER LAST REVISED 7/2/2010 | USERNAME => #USER DGN FILE => #REQUEST | RELATIVE BORDER SCALE IS IN INCHES 0 1 2 3 | UNIT 0000 | PROJECT NUMBER & PHASE 00000000001

\Safety Edge Typical Section 2.dgn 1/25/2012 12:21:12 PM

Dist	COUNTY	ROUTE	POST MILES TOTAL PROJECT	SHEET No.	TOTAL SHEETS

REGISTERED CIVIL ENGINEER DATE

PLANS APPROVAL DATE

REGISTERED PROFESSIONAL ENGINEER No. Exp. CIVIL STATE OF CALIFORNIA

THE STATE OF CALIFORNIA OR ITS OFFICERS OR AGENTS SHALL NOT BE RESPONSIBLE FOR THE ACCURACY OR COMPLETENESS OF ELECTRONIC COPIES OF THIS PLAN SHEET.

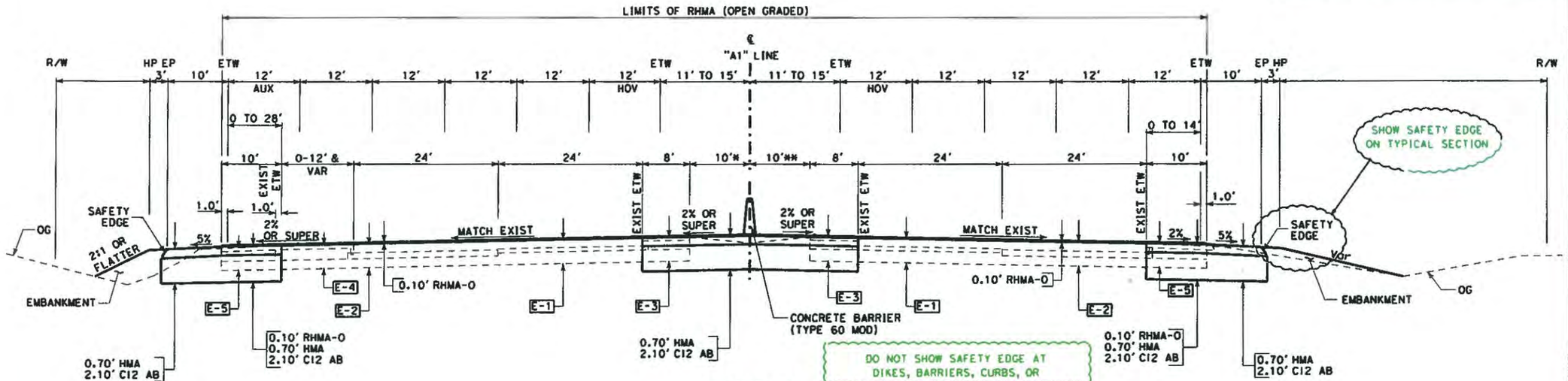

DO NOT SHOW SAFETY EDGE AT DIKES, BARRIERS, CURBS, OR OTHER LOCATION SPECIFIED IN MEMORANDUM

ROUTE 11

STA "A1" 706+75.22 TO 780+37.12

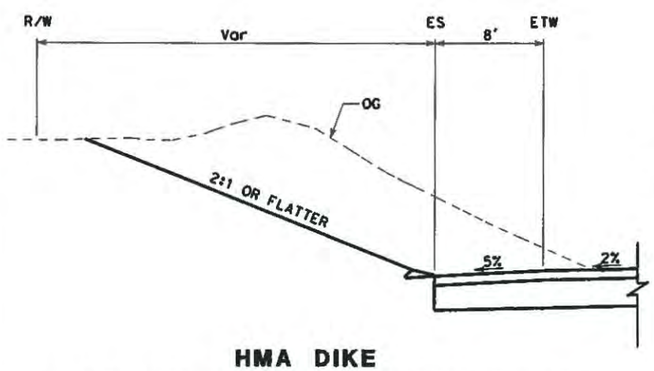

HMA DIKE

STA "A1" 622+00.00 LT TO STA "A1" 634+13.11 LT

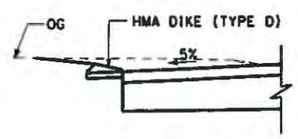

HMA DIKE

STA "A1" 574+50 TO 582+50
STA "A1" 612+15 TO "M2" 38+50

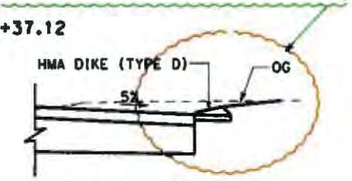

HMA DIKE

STA "A1" 580+75 TO 592+50.51
STA "A1" 624+00 TO 630+43
STA "A1" 655+00 TO 663+50
STA "A1" 728+00 TO 734+50
STA "A1" 741+00 TO 753+50
STA "A1" 625+44.90 TO "M3" 35+40
STA "M4" 50+09.79 TO "M3" 662+50

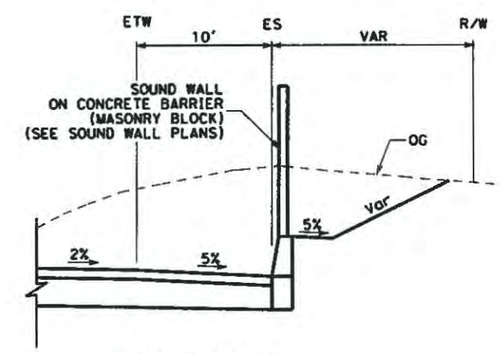

SOUND WALL

STA "A1" 621+54.96 RT TO STA "A1" 632+53.79 RT

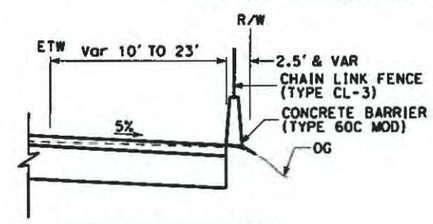

CONCRETE BARRIER

STA "A1" 680+04 TO 707+11.82

TYPICAL CROSS SECTIONS

NO SCALE

X-3

REVISED BY | DATE REVISED

CALCULATED-DESIGNED BY | CHECKED BY

FUNCTIONAL SUPERVISOR

STATE OF CALIFORNIA - DEPARTMENT OF TRANSPORTATION

Caltrans

DESIGN

LAST REVISION 03-13-09 | DATE PLOTTED => $DATE | TIME PLOTTED => $TIME

USERNAME => $USER

RELATIVE BORDER SCALE IS IN INCHES 0 1 2 3

UNIT

PROJECT NUMBER & PHASE

...\Safety Edge Typical Section 1.dgn 1/24/2012 5:18:33 PM

Dist	COUNTY	ROUTE	POST MILES TOTAL PROJECT	SHEET No.	TOTAL SHEETS

REGISTERED CIVIL ENGINEER DATE

PLANS APPROVAL DATE

THE STATE OF CALIFORNIA OR ITS OFFICERS OR AGENTS SHALL NOT BE RESPONSIBLE FOR THE ACCURACY OR COMPLETENESS OF SCANNED COPIES OF THIS PLAN SHEET.

REGISTERED PROFESSIONAL ENGINEER No. Exp. CIVIL STATE OF CALIFORNIA

PAVEMENT STRUCTURE

LOCATION	HMA (TYPE A)	CLASS 2 AGGREGATE BASE	IMPORTED BORROW	ROADWAY EXCAVATION	SHOULDER BACKING	IMPORTED TOPSOIL	COLD PLANE AC PAVEMENT	TACK COAT
	TON	CY	CY	CY	TON	CY	SOYD	TON
Sta 102+50 to 105+50	117	119	29	137	18		907	0.4
Sta 105+50 to 113+29	1749	2184	5996	2600	24	567		1.3
Sta 113+29 to 114+12			362	2039				
Sta 114+12 TO 118+00	1307	1130	361	2315		752		0.8
Sta 118+00 TO 123+50	746	1369	482	1066	18			0.6
Sta 123+50 TO 124+50	42				10		311	0.2
"DWY2" Sta 10+00 TO 11+28	37		85	8				
SAFETY EDGE	17							
HMA DIKE	90							
TOTAL	4105	4802	7315	8165	70	1319	1218	3.3

PLACE HMA DIKE

LOCATION				TYPE			HMA* (TYPE A)
				A	D	F	
SHEET	STATION	L↑	R↑	LF	LF	LF	TON
L-1	104+50 TO 109+00	X		450			
L-1	109+00 TO 111+50	X			250		
L-2	112+85 TO 113+10		X			25	
L-2	114+27 TO 114+52		X			25	
L-2	114+35 TO 114+60	X				25	
L-2	115+48 TO 121+00	X			544		
L-2	115+48 TO 121+00		X		552		
C-1	"DWY2" 10+00 TO 10+80		X	80			
			TOTAL	530	1346	75	90

* - QUANTITY INCLUDED IN PAVEMENT STRUCTURE TABLE

METAL BEAM GUARD RAILING AND END TREATMENTS

LOCATION				TRANSITION RAILING (TYPE WB)	REMOVE MBGR	A1↑ FLARED TERMINAL SYSTEM	A1↑ CRASH CUSHION SYSTEM
SHEET	STATION	L↑	R↑	EA	LF	EA	EA
L-2	112+47 TO 113+10		X	1		1	
L-2	112+97	X					1
L-2	114+27 TO 114+52		X	1		1	
L-2	114+35 TO 114+60	X		1		1	
L-2	112+97 TO 113+60		X		63		
L-2	112+30 TO 112+55	X			37		
L-2	114+12 TO 115+66		X		155		
L-2	113+30 TO 116+27	X			200		
			TOTAL	3	455	3	1

SAFETY EDGE

LOCATION				(N) SAFETY EDGE
SHEET	STATION	L↑	R↑	LF
L-1	102+50 TO 104+50	X		200
L-1	102+50 TO 112+00		X	950
L-2	112+00 TO 112+50		X	50
L-2	121+00 TO 124+50	X		350
L-2	121+00 TO 124+50		X	350
			TOTAL	1900

← OR →

SAFETY EDGE

LOCATION				(N) SAFETY EDGE
SHEET	STATION	L↑	R↑	LF
L-1	102+50 TO 112+00	X		200
			X	950
L-2	112+00 TO 124+50		X	50
		X		350
			X	350
			TOTAL	1900

← OR →

SAFETY EDGE

LOCATION		(N) SAFETY EDGE
SHEET	STATION	LF
L-1	102+50 TO 112+00	1150
L-2	112+00 TO 124+50	750
	TOTAL	1900

(N) - NOT A SEPARATE PAY ITEM, FOR INFORMATION ONLY

SUMMARY OF QUANTITIES
Q-1

REVISED BY | DATE REVISED

CALCULATED-DESIGNED BY | CHECKED BY

FUNCTIONAL SUPERVISOR

STATE OF CALIFORNIA - DEPARTMENT OF TRANSPORTATION

LAST REVISION 00-00-00 | DATE PLOTTED => %DATE | TIME PLOTTED => %TIME

BORDER LAST REVISED 7/2/2010 | USERNAME => %USER | DGN FILE => %REQUEST | RELATIVE BORDER SCALE IS IN INCHES 0 1 2 3 | UNIT 0000 | PROJECT NUMBER & PHASE 00000000001

...\Safety Edge Quantity Sample.dgn 1/24/2012 4:06:53 PM

Dist	COUNTY	ROUTE	POST MILES TOTAL PROJECT	SHEET No.	TOTAL SHEETS

REGISTERED CIVIL ENGINEER DATE

PLANS APPROVAL DATE

REGISTERED PROFESSIONAL ENGINEER No. Exp. CIVIL STATE OF CALIFORNIA

THE STATE OF CALIFORNIA OR ITS OFFICERS OR AGENTS SHALL NOT BE RESPONSIBLE FOR THE ACCURACY OR COMPLETENESS OF ELECTRONIC COPIES OF THIS PLAN SHEET.

* ADDITIONAL QUANTITIES SHOWN ELSEWHERE, SEE SHEET Q-4 AND Q-5 FOR TOTAL QUANTITY.

INCLUDE SAFETY EDGE QUANTITY IN APPROPRIATE PAVING ITEM OF WORK

DOCUMENT SAFETY EDGE QUANTITY AS NON PAY ITEM FOR INFO ONLY IN THE QUANTITY TABLE

ROADWAY ITEMS

STATION	LOCATION	COLD PLANE ASPHALT CONCRETE PAVEMENT	REMOVE CONCRETE	ROADWAY EXCAVATION	ROADWAY EMBANKMENT (N)	IMPORTED MATERIAL (SHOULDER BACKING)	CLASS 2 AGGREGATE BASE	ASPHALT TREATED PERMEABLE BASE: ROADWAY	ASPHALT TREATED PERMEABLE BASE: EDGEDRAIN (N)	SEAL RANDOM CRACKS	HOT MIX ASPHALT (TYPE A)	RUBBERIZED HOT MIX ASPHALT (OPEN GRADED)	SAFETY EDGE (N)	PLACE HOT MIX ASPHALT DIKE (TYPE D): ROADWAY	PLACE HOT MIX ASPHALT DIKE (TYPE D): DRAINAGE (N)	PLACE HOT MIX ASPHALT DIKE (TYPE F)	PLACE HOT MIX ASPHALT (MISCELLANEOUS AREA)	TACK COAT	DOWEL BAR RETROFIT	GRIND EXISTING CONCRETE PAVEMENT	PLACE STAMPED ASPHALT	3" PLASTIC PIPE (EDGE DRAIN)	6" PLASTIC PIPE (EDGE DRAIN)	CLEANOUT ASSEMBLY (EDGE DRAIN)	6" PLASTIC PIPE (EDGE DRAIN OUTLET)	FILTER FABRIC: ROADWAY	FILTER FABRIC: EDGEDRAIN UNDERDRAIN (N)	CLASS 1 PERMEABLE MATERIAL	ROCK SLOPE PROTECTION (BACKING No. 3, METHOD B)	ROCK SLOPE PROTECTION FABRIC	MINOR CONCRETE (CURB AND GUTTER)	MINOR CONCRETE (SIDEWALK)
	LT/RT/CL	SQYD	CY	CY	CY	TON	CY	CY		LNMI	TON	TON	TON	LF		LF	SQYD	TON	EA	SQYD	SQYD	LF	LF	EA	LF	SQYD		CY	CY	SQYD	CY	CY
STAGE 1																																	
"A1" 713+88.34 TO "A1" 784+61.07	LT			10872	21755	947	13384	23			8657		220				150	5			521					3410		1453					
"A1" 706+75.22 TO "A1" 780+37.12	RT			12568	11200	972	12212	79			8823		127	2210				5			657												
"Z4" 23+32.84 TO "Z4" 28+00.00	RT			2215	483						502			257								107	911	4	77		354						
"Z5" 22+09.55 TO "Z5" 29+90.74	LT	342		764	296		501		17		371						176					65	904	4	68		352						
"Z6" 15+78.20 TO "Z6" 22+50.00	LT			1684	32		705	149	11		748		35	13	15	25						40	554	3	56		216		1	4			
STAGE 2																																	
"A1" 634+08.49 TO "A1" 727+23.37	LT	1364		9487	423	410	8045	147			5854						96	3			525												
"A1" 631+63.82 TO "A1" 723+32.66	RT			13083	219	478	8495	213			6215			850			119	3			380					2050		342					
"M4" 38+52.32 TO "M4" 55+00.00	RT	398		11989	24		2259				1631		27	780		27	117	1											1	4	10		
"M5" 47+21.06 TO "M5" 55+50.00	LT	427		2223			715				550			829																			
"M6" 39+91.59 TO "M6" 53+50.00	LT		52	3576	350		2062				1524		23	743	15	25					543								1	4	38	15
"WR2" 8+00.42 TO "WR2" 16+67.00	RT		10	69			281				54						194														24	57
"Z2" 8+69.71 TO "Z2" 17+88.14	LT			1587	127		1381	123	15		648											49	891	3	57		347						
"Z3" 4+30.60 TO "Z3" 12+50.00	RT			1181	68		898	156	17		325			198	15							28	781	3	66		304						
"Z4" 15+73.30 TO "Z4" 23+32.84	RT			3677	789		1349		18		993			703			131														3		
"Z7" 5+73.25 TO "Z7" 18+09.82	RT		29	4679	307		2423	272	18		1190		21	650	30	26	136				328	63	843	5	86		328		1	4	30	16
STAGE 3																																	
"A1" 570+20.00 TO "A1" 652+88.02	LT			21902	2006	521	11451				8301		125	2401				4															
"A1" 570+20.00 TO "A1" 648+93.91	RT			25365	1850	1137	12507				9090			1819	15			5															
"M2" 28+50.00 TO "M2" 37+50.00	LT			5634	6		699				543			900																			
"M3" 30+43.27 TO "M3" 35+40.00	LT			4281			480				371			497																			
"M7" 32+67.73 TO "M7" 45+50.00	RT	263	24	4052	783		2504				1828		68	817		25		1			382								1	4	21		
STAGE 4																																	
"A1" 428+62.48 TO "A1" 436+83.50	CL		17	50984			43416				30518			3852	15	90	1382	16													307		
"ML1" 11+74.68 TO "ML1" 22+44.07	RT			5	29		13				2						8																8
STAGE 5																																	
"A1" 423+36.60 TO "A1" 821+04.69	LT/CL/RT									56		45987							61112	393564													
"M2" 35+90.65 TO "M2" 44+42.40	LT/CL/RT	112										156																					
"M3" 33+14.25 TO "M2" 40+92.95	LT/CL/RT	168										215																					
"M4" 38+52.32 TO "M2" 48+66.29	LT/CL/RT	112										308																					
"M5" 42+18.00 TO "M2" 52+79.36	LT/CL/RT	168										277																					
"M6" 44+93.40 TO "M2" 53+50.00	LT/CL/RT	75										215																					
"M7" 32+67.73 TO "M2" 40+35.43	LT/CL/RT	23										300																					
"Z2" 14+02.52 TO "M2" 22+74.00	LT/CL/RT	112										195																					
"Z3" 7+00.00 TO "M2" 12+50.00	LT/CL/RT	280										128																					
"Z4" 15+73.30 TO "M2" 21+43.61	LT/CL/RT	112										278																					
"Z5" 18+92.00 TO "M2" 27+20.11	LT/CL/RT	224										70																					
"Z6" 20+86.00 TO "M2" 26+00.00	LT/CL/RT	168										146																					
"Z7" 5+73.25 TO "Z7" 18+09.82	LT/CL/RT	9										320																					
TOTAL		4357	132*	191877	40747	4465	125780	1162	96	56	88738*	18595*	646	17519	105	218*	2509*	43	61112	393564	3336	352	4884	22	410	5460*	1900	1795*	5*	20*	433	96

(N) NOT A SEPERATE PAY ITEM, FOR INFORMATION ONLY

SUMMARY OF QUANTITIES

Q-1

REVISED BY | DATE REVISED

CALCULATED/DESIGNED BY | CHECKED BY

FUNCTIONAL SUPERVISOR

STATE OF CALIFORNIA - DEPARTMENT OF TRANSPORTATION

Caltrans

DESIGN

#REQUEST

REVISION DATE PLOTTED => \$DATE TIME PLOTTED => \$TIME 03-23-09

...\SAMPLE PLANS\Quantity.dgn 1/24/2012 5:03:51 PM

USERNAME => \$USER

RELATIVE BORDER SCALE IS IN INCHES 0 1 2 3

UNIT

PROJECT NUMBER & PHASE