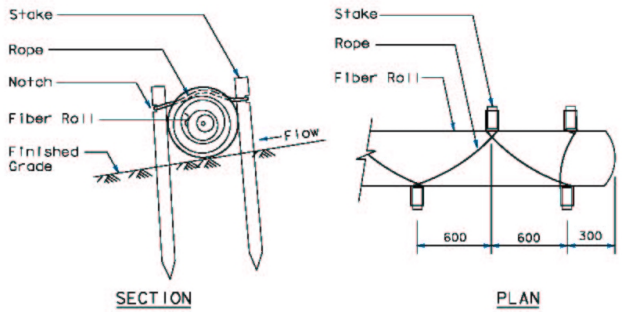

STAKING AND LASHING DETAIL

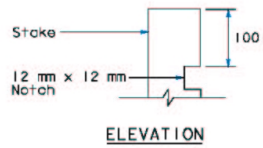

NOTCH DETAIL

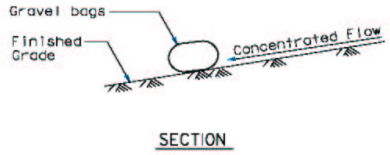

NOTE

1. Spillway depth 'd' shall be maintained to prevent flanking of concentrated flow around the ends of check dam.

TEMPORARY CHECK DAM (TYPE 2)

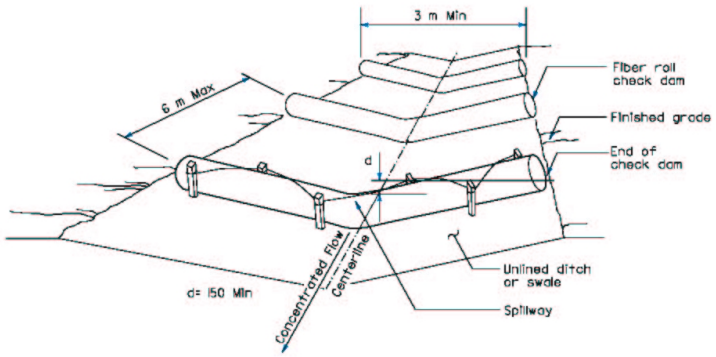

PERSPECTIVE
TEMPORARY CHECK DAM (TYPE 1)

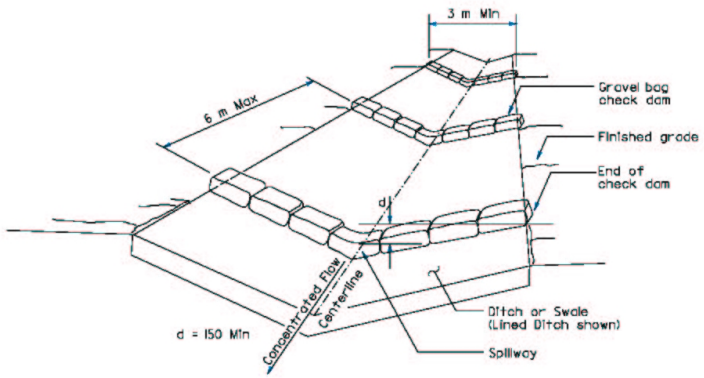

PERSPECTIVE
TEMPORARY CHECK DAM (TYPE 2)