Dist	COUNTY	ROUTE	POST MILES TOTAL PROJECT	SHEET No.	TOTAL SHEETS

REGISTERED CIVIL ENGINEER DATE

PLANS APPROVAL DATE

REGISTERED PROFESSIONAL ENGINEER No. Exp. CIVIL STATE OF CALIFORNIA

THE STATE OF CALIFORNIA OR ITS OFFICERS OR AGENTS SHALL NOT BE RESPONSIBLE FOR THE ACCURACY OR COMPLETENESS OF SCANNED COPIES OF THIS PLAN SHEET.

ABBREVIATIONS:

DTWM DOUBLE TWISTED WIRE MESH

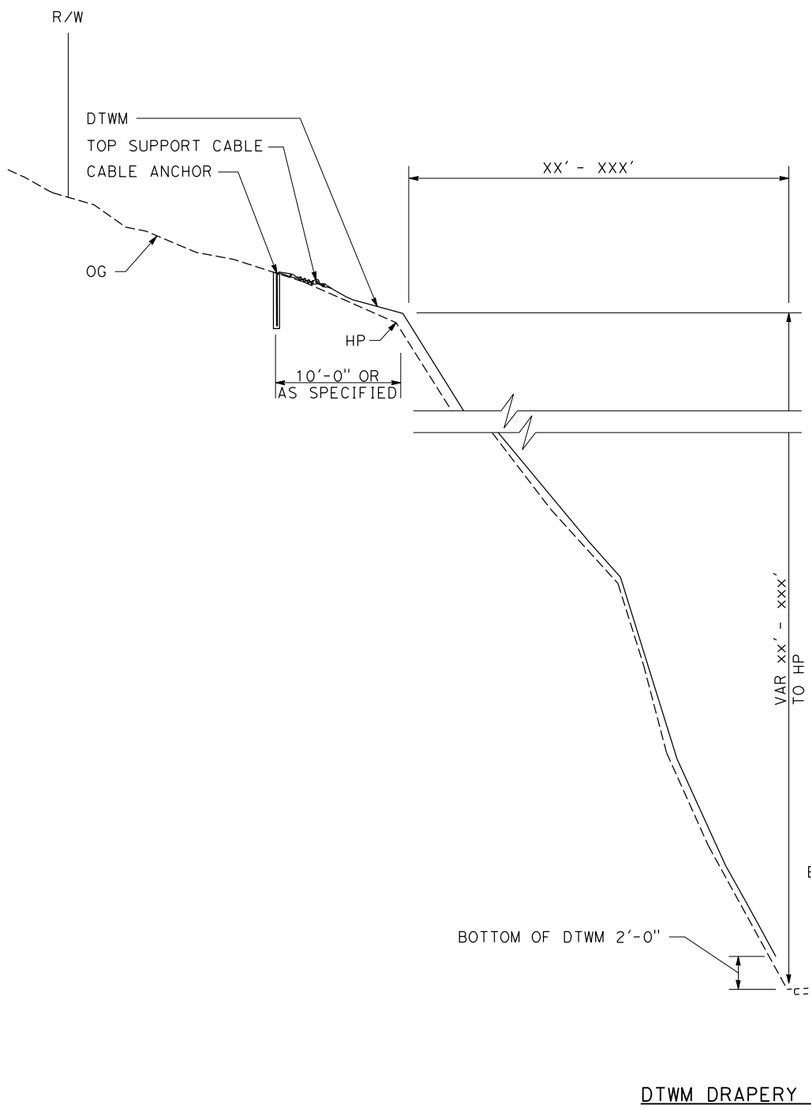

DTWM DRAPERY SYSTEM

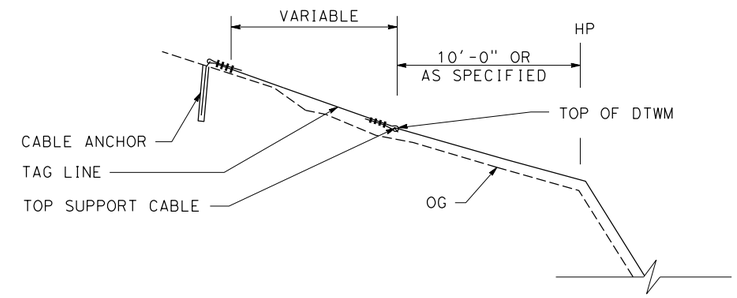

DTWM DRAPERY SYSTEM WITH TAG LINE

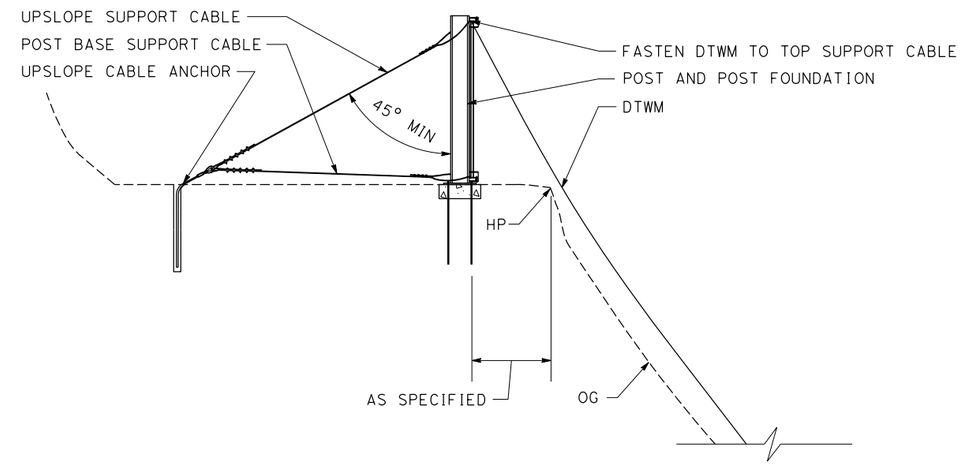

ELEVATED DTWM DRAPERY SYSTEM WITH POSTS

CONSTRUCTION DETAILS
TYPICAL CROSS SECTIONS
DOUBLE TWISTED WIRE MESH DRAPERY SYSTEM

NO SCALE

C-1

STATE OF CALIFORNIA - DEPARTMENT OF TRANSPORTATION

Caltrans® GEOTECHNICAL

FUNCTIONAL SUPERVISOR

CALCULATED-DESIGNED BY

CHECKED BY

REVISED BY

DATE REVISED

LAST REVISION 07-07-15

DATE PLOTTED => 7/20/2015
TIME PLOTTED => 1:49:09 PM

Dist	COUNTY	ROUTE	POST MILES TOTAL PROJECT	SHEET No.	TOTAL SHEETS

REGISTERED CIVIL ENGINEER DATE

PLANS APPROVAL DATE

REGISTERED PROFESSIONAL ENGINEER No. Exp. CIVIL STATE OF CALIFORNIA

THE STATE OF CALIFORNIA OR ITS OFFICERS OR AGENTS SHALL NOT BE RESPONSIBLE FOR THE ACCURACY OR COMPLETENESS OF SCANNED COPIES OF THIS PLAN SHEET.

NOTES:

1. CABLE ANCHOR LOCATIONS TO BE STAKED IN THE FIELD BY THE ENGINEER.
2. DOUBLE TWISTED WIRE MESH DRAPERY SYSTEM LIMITS TO BE LAID OUT BY THE ENGINEER.
3. CABLE ANCHOR MINIMUM ALLOWABLE DESIGN LOAD IS 5 TONS.

LEGEND

= DOUBLE TWISTED WIRE MESH PANEL

= CABLE ANCHOR LOCATION/NUMBER

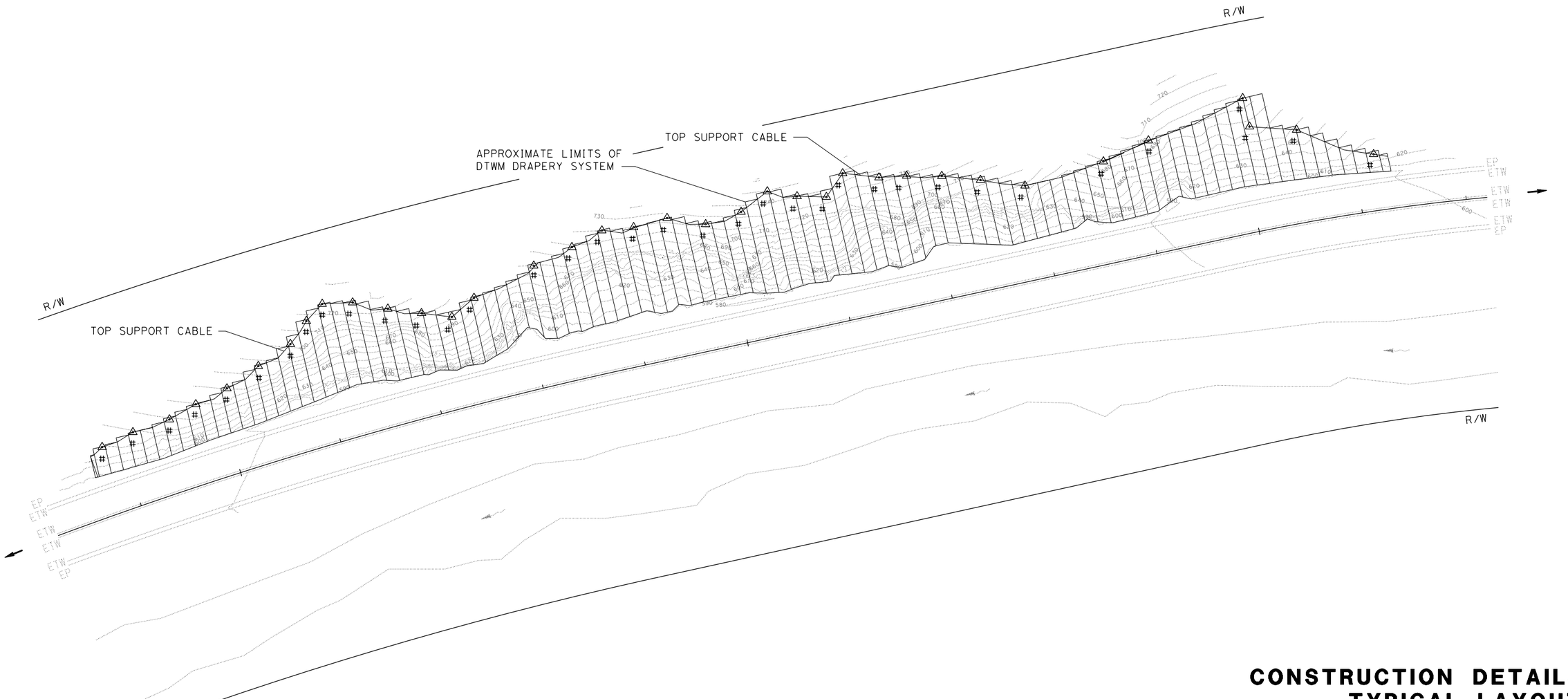

CONSTRUCTION DETAILS
TYPICAL LAYOUT
DOUBLE TWISTED WIRE MESH DRAPERY SYSTEM

NO SCALE

C-2A

STATE OF CALIFORNIA - DEPARTMENT OF TRANSPORTATION

Caltrans® GEOTECHNICAL

FUNCTIONAL SUPERVISOR

CALCULATED-DESIGNED BY

CHECKED BY

REVISED BY

DATE REVISED

LAST REVISION 07-07-15

DATE PLOTTED => 7/20/2015
TIME PLOTTED => 1:50:48 PM

Dist	COUNTY	ROUTE	POST MILES TOTAL PROJECT	SHEET No.	TOTAL SHEETS

REGISTERED CIVIL ENGINEER DATE

PLANS APPROVAL DATE

REGISTERED PROFESSIONAL ENGINEER No. Exp. CIVIL STATE OF CALIFORNIA

THE STATE OF CALIFORNIA OR ITS OFFICERS OR AGENTS SHALL NOT BE RESPONSIBLE FOR THE ACCURACY OR COMPLETENESS OF SCANNED COPIES OF THIS PLAN SHEET.

NOTES:

1. CABLE ANCHOR AND POST FOUNDATION LOCATIONS TO BE STAKED IN THE FIELD BY THE ENGINEER.
2. POSTS MAY BE REQUIRED TO LIFT THE TOP SUPPORT CABLE OF THE DTWM DRAPERY SYSTEM OR TO SPAN A CHUTE OR OBSTACLE.
3. DTWM DRAPERY SYSTEM LIMITS TO BE LAID OUT BY THE ENGINEER.
4. CABLE ANCHOR MINIMUM ALLOWABLE DESIGN LOAD IS 5 TONS.

LEGEND

= DOUBLE TWISTED WIRE MESH PANEL

= CABLE ANCHOR LOCATION/NUMBER

= POST LOCATION/NUMBER

= UPSLOPE CABLE ANCHOR FOR POST

= LATERAL CABLE ANCHOR FOR POST

POST FOUNDATION	
#	TYPE

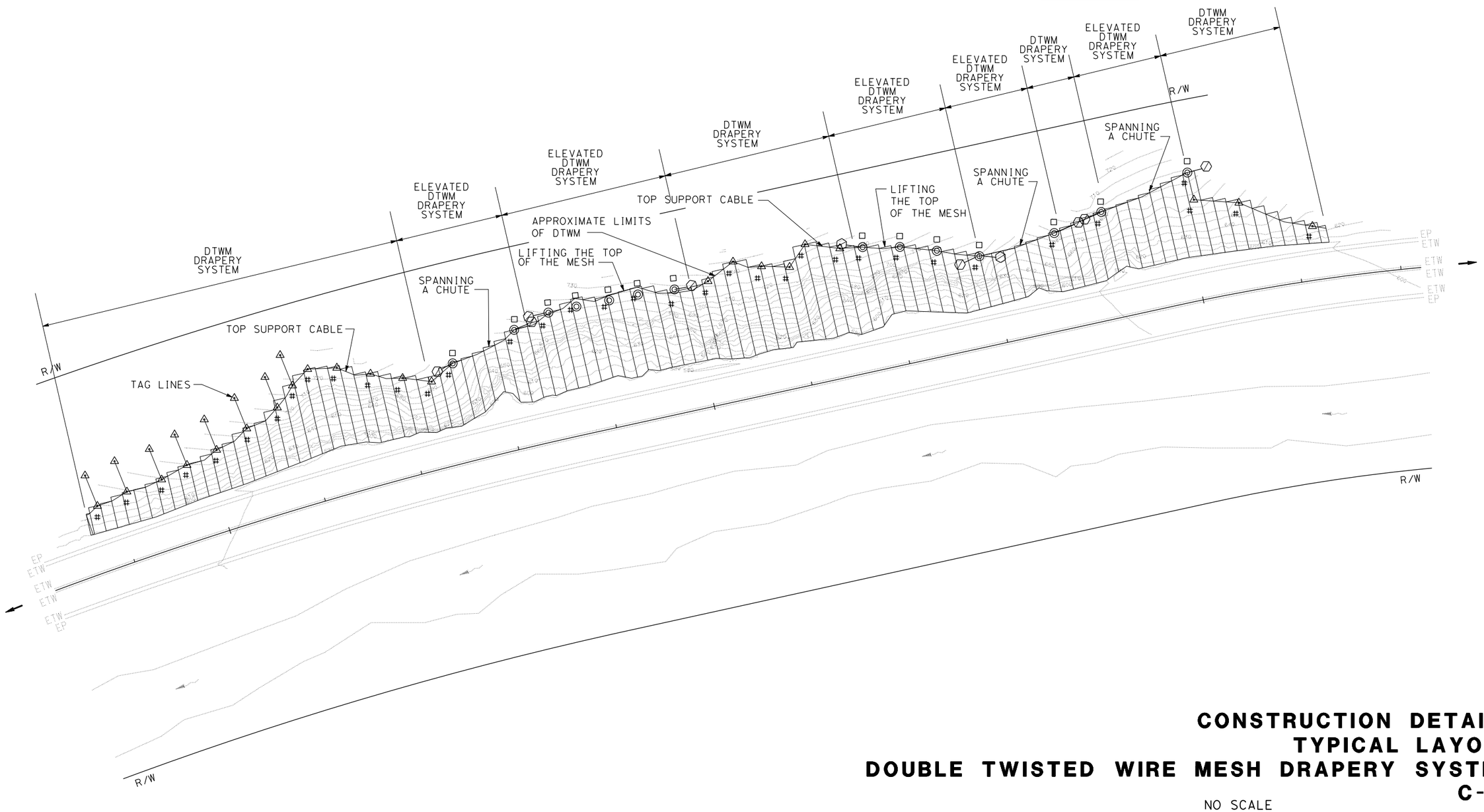

CONSTRUCTION DETAILS
TYPICAL LAYOUT
DOUBLE TWISTED WIRE MESH DRAPERY SYSTEM
C-2B

NO SCALE

STATE OF CALIFORNIA - DEPARTMENT OF TRANSPORTATION

Caltrans® GEOTECHNICAL

FUNCTIONAL SUPERVISOR

CALCULATED-DESIGNED BY | CHECKED BY

REVISED BY | DATE REVISED

LAST REVISION 07-07-15 | DATE PLOTTED => 7/20/2015 TIME PLOTTED => 1:51:32 PM

Dist	COUNTY	ROUTE	POST MILES TOTAL PROJECT	SHEET No.	TOTAL SHEETS

REGISTERED CIVIL ENGINEER DATE

PLANS APPROVAL DATE

REGISTERED PROFESSIONAL ENGINEER No. Exp. CIVIL STATE OF CALIFORNIA

THE STATE OF CALIFORNIA OR ITS OFFICERS OR AGENTS SHALL NOT BE RESPONSIBLE FOR THE ACCURACY OR COMPLETENESS OF SCANNED COPIES OF THIS PLAN SHEET.

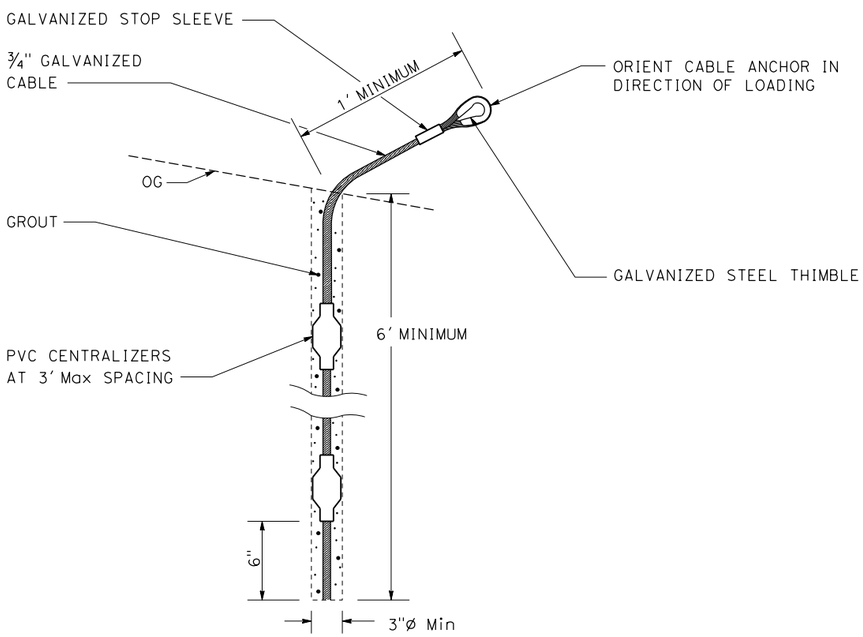

CONTINUOUS ¾" CABLE ANCHOR

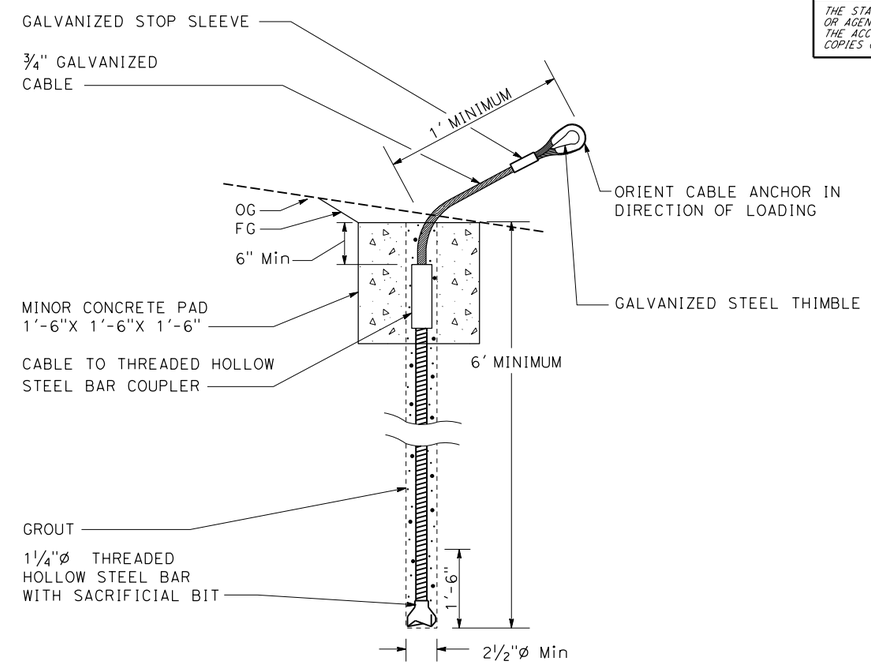

TWO COMPONENT CABLE ANCHOR

DOUBLE TWISTED WIRE MESH DRAPERY SYSTEM CONSTRUCTION DETAILS CABLE ANCHOR DETAILS

NO SCALE

C-3

STATE OF CALIFORNIA - DEPARTMENT OF TRANSPORTATION

Caltrans® GEOTECHNICAL

FUNCTIONAL SUPERVISOR

CALCULATED-DESIGNED BY

CHECKED BY

REVISED BY

DATE REVISED

LAST REVISION 07-07-15

DATE PLOTTED => 7/20/2015
TIME PLOTTED => 1:52:06 PM

Dist	COUNTY	ROUTE	POST MILES TOTAL PROJECT	SHEET No.	TOTAL SHEETS

REGISTERED CIVIL ENGINEER DATE

PLANS APPROVAL DATE

REGISTERED PROFESSIONAL ENGINEER No. Exp. CIVIL STATE OF CALIFORNIA

THE STATE OF CALIFORNIA OR ITS OFFICERS OR AGENTS SHALL NOT BE RESPONSIBLE FOR THE ACCURACY OR COMPLETENESS OF SCANNED COPIES OF THIS PLAN SHEET.

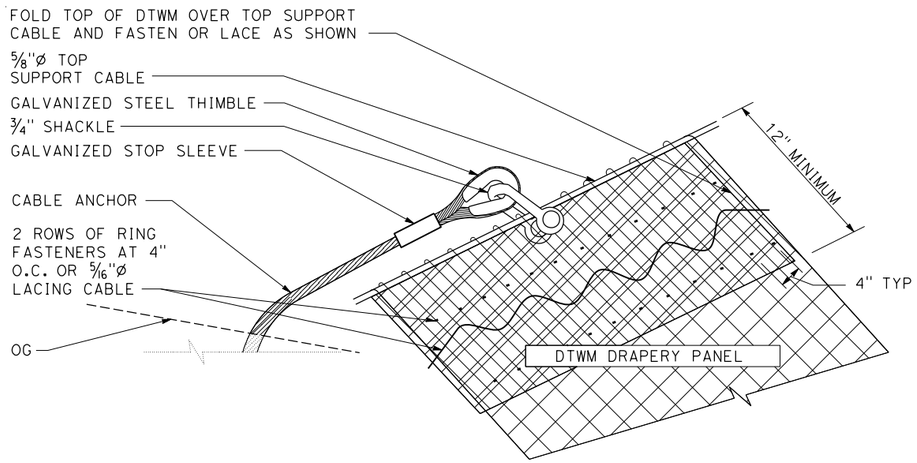

TOP CONNECTION DETAIL

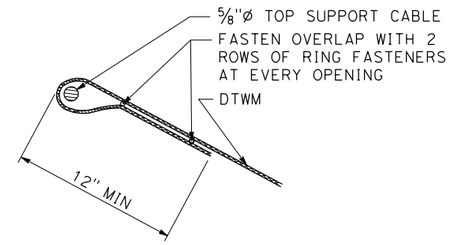

RING FASTENER DETAIL
ALTERNATE A

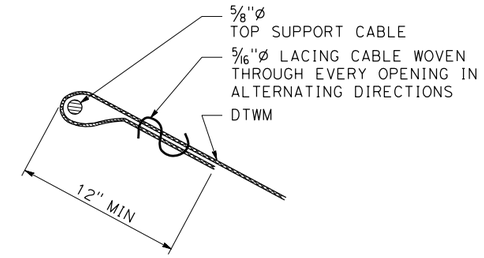

LACING CABLE DETAIL
ALTERNATE B

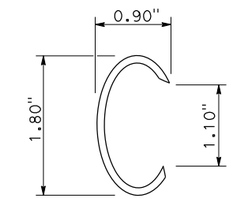

BEFORE CLOSURE

WIRE DIAMETER 0.120"

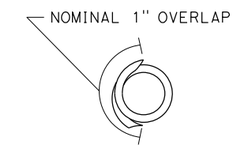

AFTER CLOSURE

RING FASTENER DETAIL

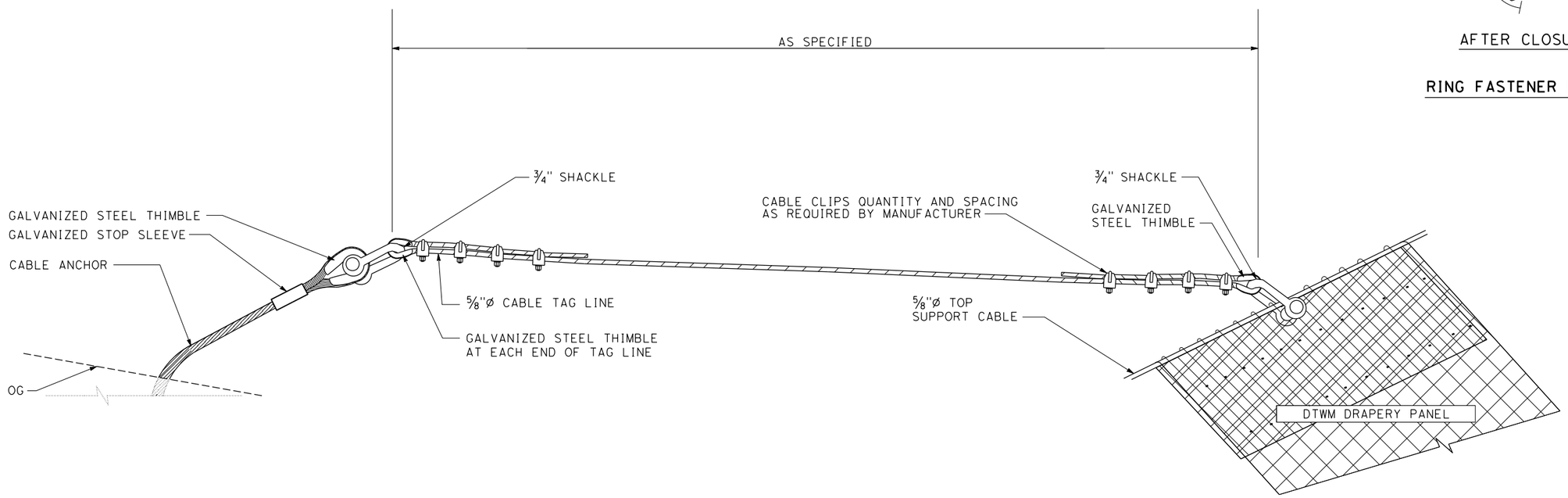

TAG LINE DETAIL

DOUBLE TWISTED WIRE MESH DRAPERY SYSTEM CONSTRUCTION DETAILS CONNECTION DETAILS

C-4

NO SCALE

STATE OF CALIFORNIA - DEPARTMENT OF TRANSPORTATION

Caltrans® GEOTECHNICAL

FUNCTIONAL SUPERVISOR

CALCULATED-DESIGNED BY

CHECKED BY

REVISED BY

DATE REVISED

LAST REVISION 07-07-15

DATE PLOTTED => 7/20/2015
TIME PLOTTED => 11:53:02 PM

Dist	COUNTY	ROUTE	POST MILES TOTAL PROJECT	SHEET No.	TOTAL SHEETS

REGISTERED CIVIL ENGINEER DATE

PLANS APPROVAL DATE

REGISTERED PROFESSIONAL ENGINEER No. Exp. CIVIL STATE OF CALIFORNIA

THE STATE OF CALIFORNIA OR ITS OFFICERS OR AGENTS SHALL NOT BE RESPONSIBLE FOR THE ACCURACY OR COMPLETENESS OF SCANNED COPIES OF THIS PLAN SHEET.

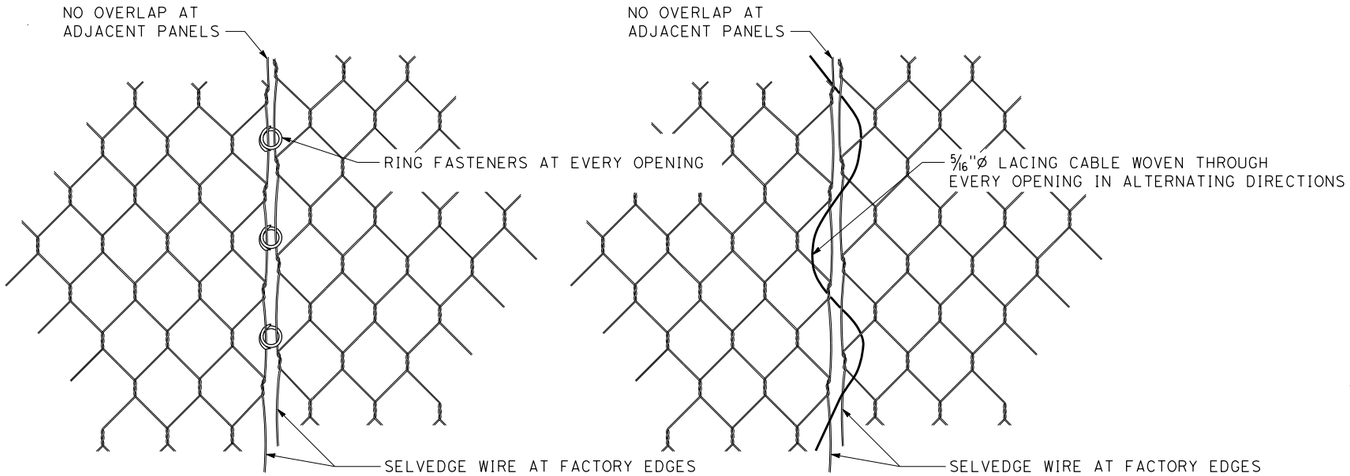

RING FASTENER ALTERNATE

LACING CABLE ALTERNATE

DTWM PANEL VERTICAL CONNECTION DETAIL

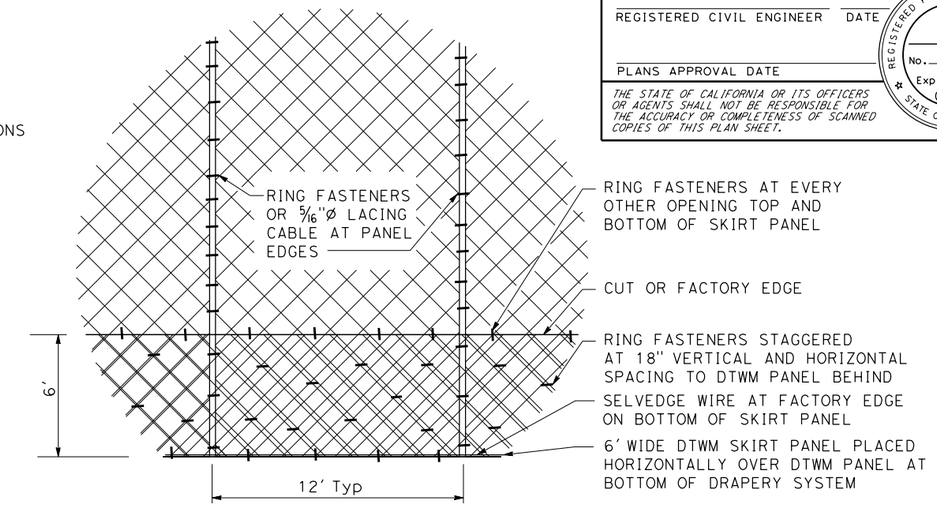

SKIRT PANEL DETAIL

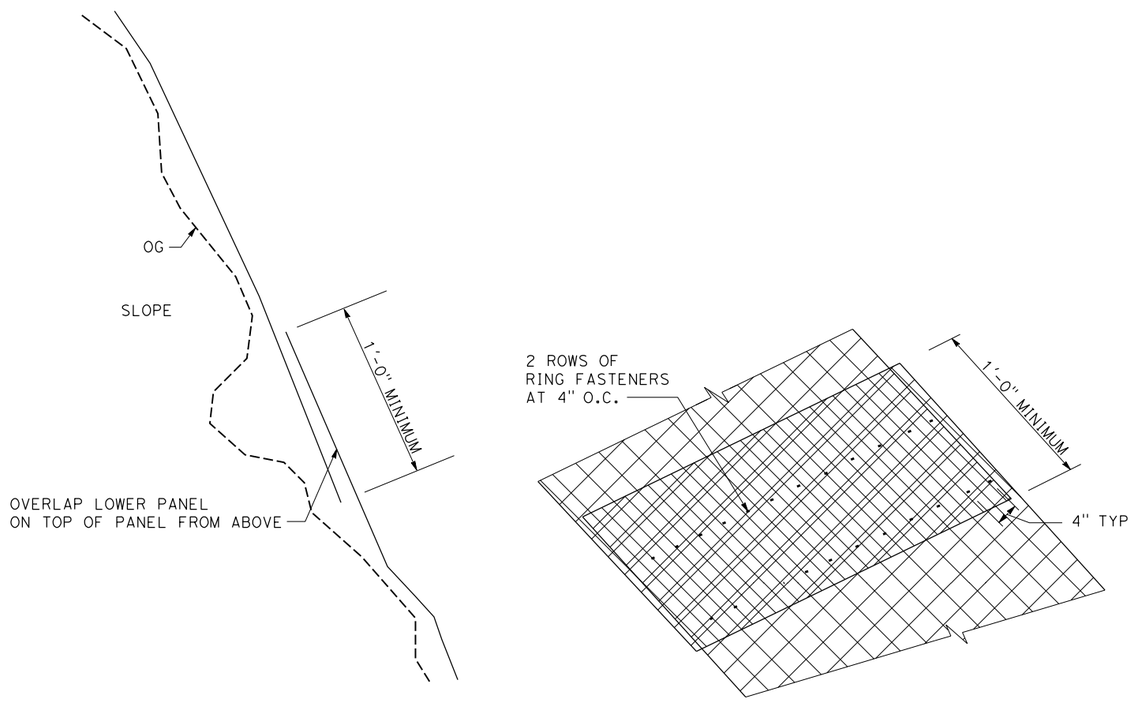

CROSS SECTION

RING FASTENER DETAIL

DTWM PANEL HORIZONTAL CONNECTION DETAIL

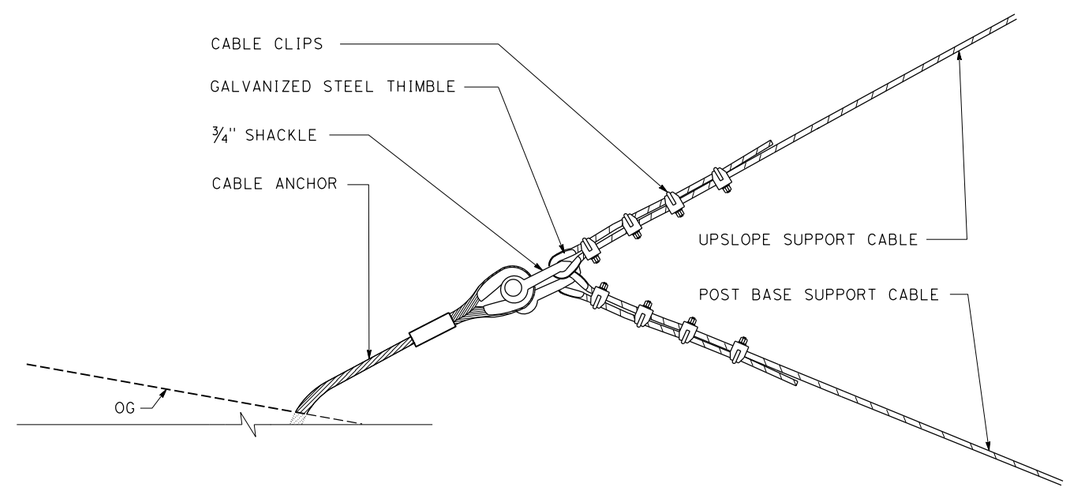

UPSLOPE ANCHOR CONNECTION DETAIL

CONSTRUCTION DETAILS
DOUBLE TWISTED WIRE MESH DRAPERY SYSTEM
C-5

NO SCALE

STATE OF CALIFORNIA - DEPARTMENT OF TRANSPORTATION

Caltrans® GEOTECHNICAL

FUNCTIONAL SUPERVISOR

CALCULATED-DESIGNED BY

CHECKED BY

REVISED BY

DATE REVISED

LAST REVISION 07-09-15

DATE PLOTTED => 7/20/2015
TIME PLOTTED => 1:53:40 PM

Dist	COUNTY	ROUTE	POST MILES TOTAL PROJECT	SHEET No.	TOTAL SHEETS

REGISTERED CIVIL ENGINEER DATE

PLANS APPROVAL DATE

REGISTERED PROFESSIONAL ENGINEER No. Exp. CIVIL STATE OF CALIFORNIA

THE STATE OF CALIFORNIA OR ITS OFFICERS OR AGENTS SHALL NOT BE RESPONSIBLE FOR THE ACCURACY OR COMPLETENESS OF SCANNED COPIES OF THIS PLAN SHEET.

NOTES:

1. CABLE ANCHOR AND POST FOUNDATION LOCATIONS TO BE STAKED IN THE FIELD BY THE ENGINEER.
2. LATERAL SUPPORT CABLE, UPSLOPE SUPPORT CABLE AND POST BASE SUPPORT CABLE SHALL BE SEPARATE, INDEPENDENT CABLES.

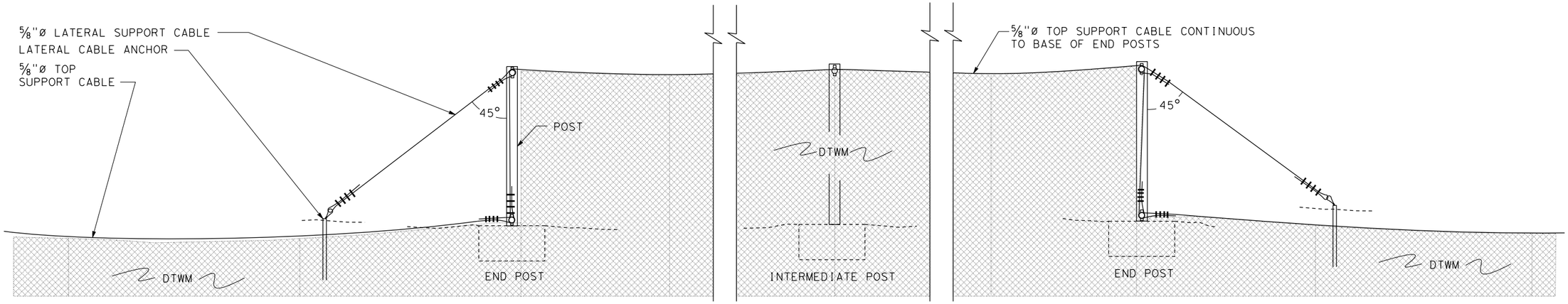

ELEVATION VIEW

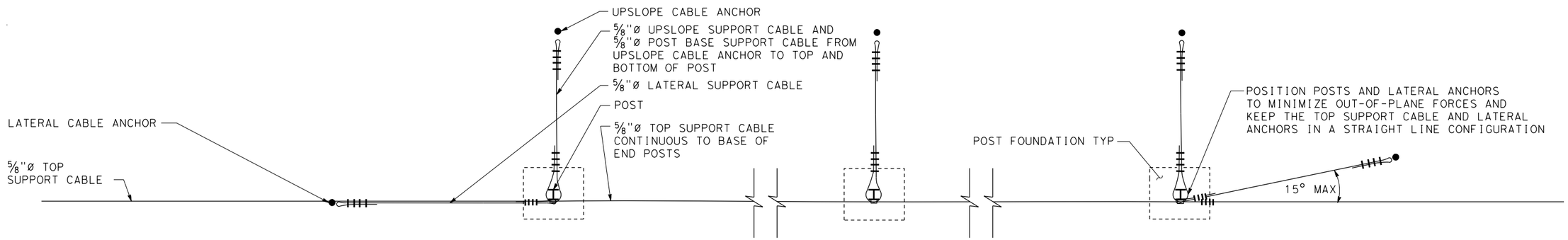

PLAN VIEW

CONSTRUCTION DETAILS
ELEVATED DOUBLE TWISTED WIRE MESH DRAPERY SYSTEM
C-6

NO SCALE

STATE OF CALIFORNIA - DEPARTMENT OF TRANSPORTATION

Caltrans® GEOTECHNICAL

FUNCTIONAL SUPERVISOR

CALCULATED-DESIGNED BY

CHECKED BY

REVISED BY

DATE REVISED

LAST REVISION 07-09-15

DATE PLOTTED => 7/20/2015
TIME PLOTTED => 1:54:14 PM

Dist	COUNTY	ROUTE	POST MILES TOTAL PROJECT	SHEET No.	TOTAL SHEETS

REGISTERED CIVIL ENGINEER DATE

PLANS APPROVAL DATE

REGISTERED PROFESSIONAL ENGINEER No. Exp. CIVIL STATE OF CALIFORNIA

THE STATE OF CALIFORNIA OR ITS OFFICERS OR AGENTS SHALL NOT BE RESPONSIBLE FOR THE ACCURACY OR COMPLETENESS OF SCANNED COPIES OF THIS PLAN SHEET.

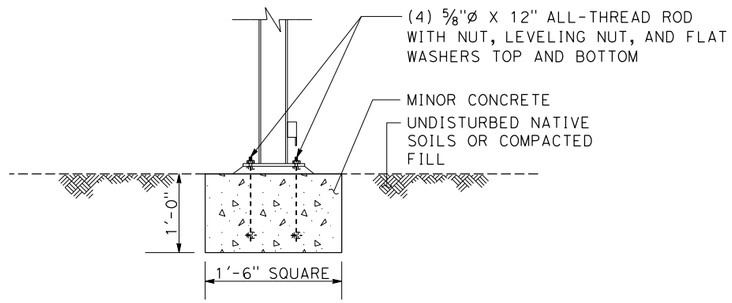

TYPE 1 - POST FOUNDATION

FOUNDATION IN SOIL

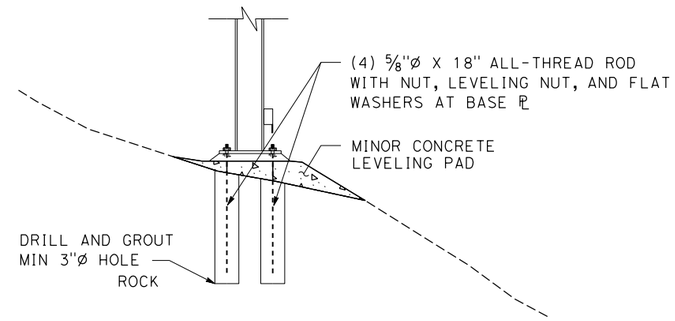

TYPE 2 - POST FOUNDATION

FOUNDATION IN ROCK

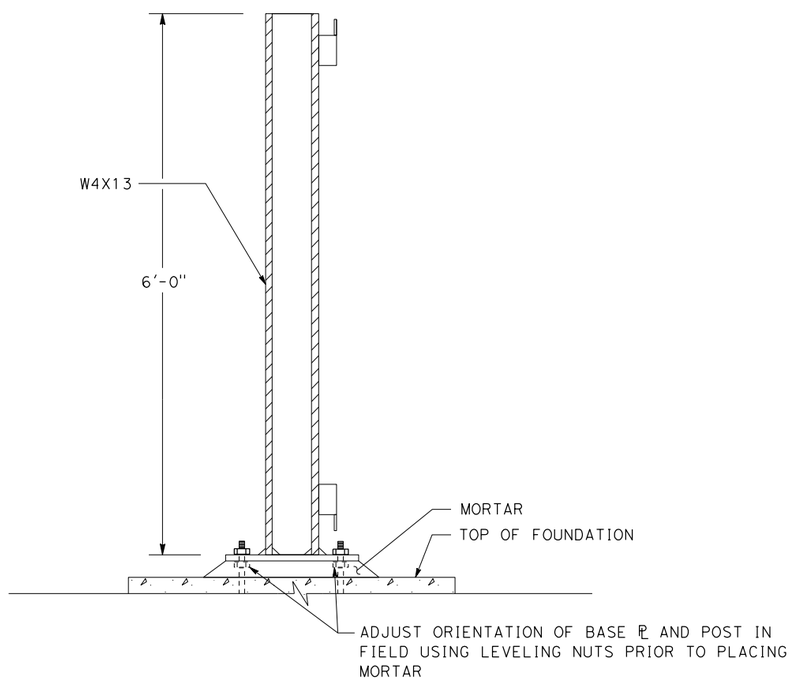

POST BASE DETAIL

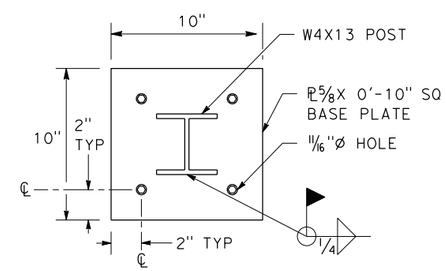

BASE PLATE

CONSTRUCTION DETAILS
ELEVATED DOUBLE TWISTED WIRE MESH DRAPERY SYSTEM
POST FOUNDATION DETAILS

NO SCALE

C-7

STATE OF CALIFORNIA - DEPARTMENT OF TRANSPORTATION

Caltrans® GEOTECHNICAL

FUNCTIONAL SUPERVISOR

CALCULATED-DESIGNED BY

CHECKED BY

REVISED BY

DATE REVISED

LAST REVISION 07-09-15

DATE PLOTTED => 7/20/2015

TIME PLOTTED => 1:54:48 PM

Dist	COUNTY	ROUTE	POST MILES TOTAL PROJECT	SHEET No.	TOTAL SHEETS

REGISTERED CIVIL ENGINEER DATE

PLANS APPROVAL DATE

REGISTERED PROFESSIONAL ENGINEER No. Exp. CIVIL STATE OF CALIFORNIA

THE STATE OF CALIFORNIA OR ITS OFFICERS OR AGENTS SHALL NOT BE RESPONSIBLE FOR THE ACCURACY OR COMPLETENESS OF SCANNED COPIES OF THIS PLAN SHEET.

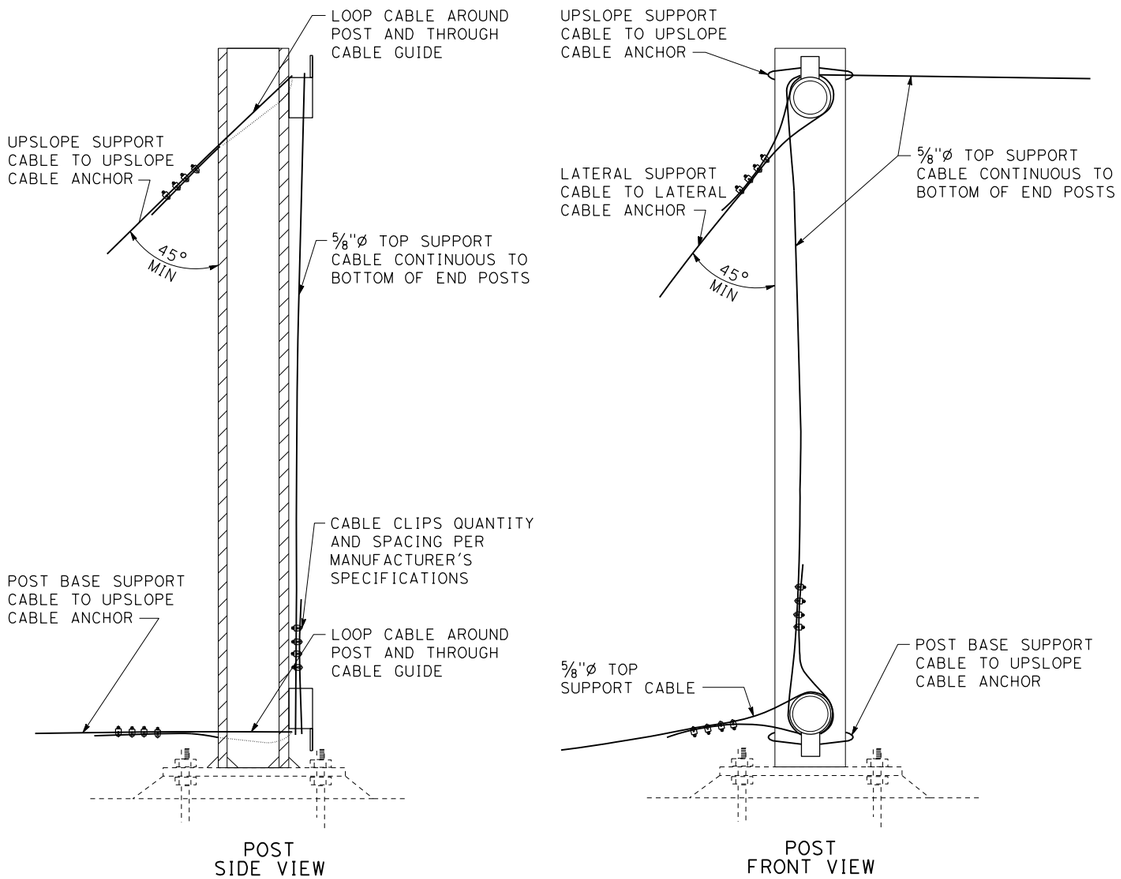

END POST CONNECTION DETAILS
(INTERMEDIATE POST SIMILAR)

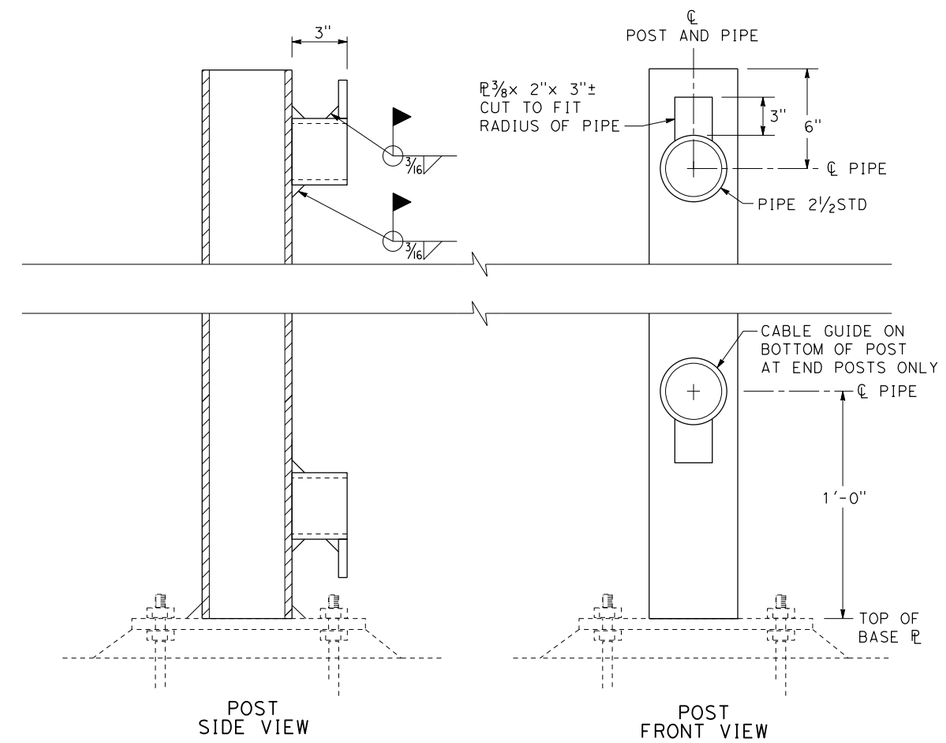

CABLE GUIDE DETAILS

CONSTRUCTION DETAILS
ELEVATED DOUBLE TWISTED WIRE MESH DRAPERY SYSTEM
POST FOUNDATION DETAILS

NO SCALE

C-8

STATE OF CALIFORNIA - DEPARTMENT OF TRANSPORTATION

Caltrans®

GEOTECHNICAL

FUNCTIONAL SUPERVISOR

CALCULATED-DESIGNED BY

CHECKED BY

REVISED BY

DATE REVISED

LAST REVISION 07-09-15

DATE PLOTTED => 7/20/2015
TIME PLOTTED => 1:55:17 PM