INFORMATION HANDOUT

For Contract No. 02-0E24U4
At 02-Plu-89-20.0/20.6

Identified by
Project ID 0215000146

MATERIALS INFORMATION

Optional Stockpile Sites

Decorative Street Lighting Guidance

Underground Conduit Installation

Water Source Information

Greenville Streetscape - 02-0E240

Proposed County Yard Stockpile Location

Greenville Streetscape - 02-0E240

Proposed Hideaway Rd. Stockpile Location

Prepared by: ABB1

DECORATIVE STREETLIGHTING

029690

Asset Type:	Electric Distribution	**Function:**	Construction and Maintenance
Issued by:	C. A. Partridge (CAP4)	**Date:**	06-28-13

Rev. #04: This document replaces PG&E Document 029690, Rev. #03. For a description of the changes, see Page 21.

Purpose and Scope

This document provides guidance for the selection, material ordering, and installation of decorative streetlighting systems.

Description

This document contains coded luminaires, posts and poles, bracket arm assemblies, and manufactured foundations. Information for cast-in-place foundations and embedded posts is also included. Information is found in these sections:

- Post-Top Luminaires (Table 1 – Table 13)
- Posts, Embedded (Table 14 – Table 17)
- Posts, Foundation Mounted (Table 18 – Table 25)
- Decorative Poles, Foundation Mounted, Including Optional Crossarms (Table 26 – Table 30)
- Foundation Systems (Table 31 – Table 33)

General Notes

1. All posts must include a 3” diameter (+0”/–1/8”) tenon suitable for mounting post-top luminaires with a 3” slip fitter.

   Exception: The brackets used for mounting the Epic pendant luminaire mount directly on a 4” diameter straight, round post.
2. Posts are not designed to support loads, such as banners, other than their luminaires.
3. All luminaires, except the Epic and Memphis pendant style luminaires, are designed for mounting on a 3” diameter tenon and may be installed on any of the posts listed in this document. They may also be installed in pairs on some posts, using the crossarm listed in the Decorative Posts section.
4. Photocontrols are not included in the luminaire code. One photocontrol must be ordered for each luminaire ordered; use Code 350870.
5. Older luminaires may be equipped with the button-type photocontrols. Replacement photocontrols are: 120 V – Code 356103; 208/240/277 V – Code 356104.
6. The distribution of light from each luminaire is identified by the IES number associated with the luminaire. IES light distribution patterns are illustrated below:

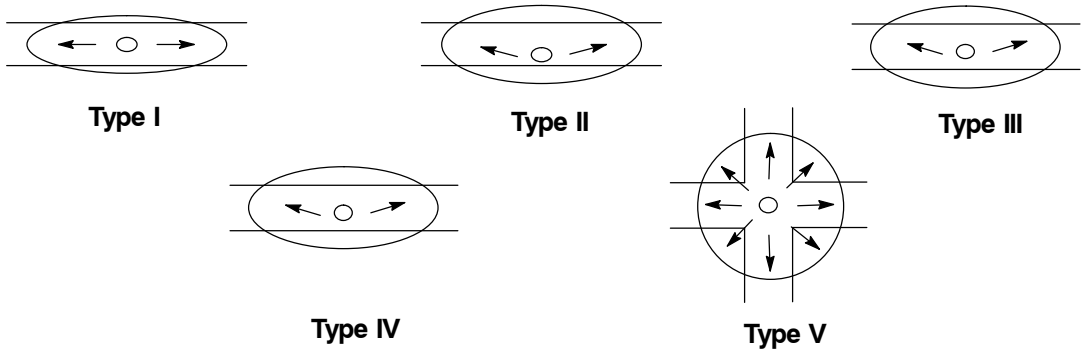

Figure 1
Light Distribution Classifications

Decorative Streetlighting

Luminaires

Table 1 Pictorial Index to Luminaires Approved for Purchase

American Revolution
Cutoff (AEL)
Table 2 on Page 3

American Revolution
(AEL)
Table 2 on Page 3

Traditionaire
(Cooper)
Table 3 on Page 3

Town and Country
(GE)
Table 4 on Page 4

Vandermore
(GE)
Table 5 on Page 4

Vandermore
With Spikes (GE)
Table 5 on Page 4

ACN Retractive Acorn
(Cooper)
Table 6 on Page 5

Granville (Acorn)
(Holophane)
Table 7 on Page 5

Granville (Acorn) With
Grill and Finial
(Holophane)
Table 8 on Page 5

Contempo
AEL
Table 9 on Page 6

Woodbridge
(Cooper)
Table 10 on Page 6

P17M
(GE)
Table 11 on Page 6

Epic Medium and Large
(Cooper)
Table 12 on Page 7

Memphis (Teardrop)
(Holophane)
Table 13 on Page 7

Decorative Streetlighting

Post-Top Luminaires

Table 2 American Revolution – American Electric Lighting (black only)

Lamp Size (watts)	IES Light Pattern	Catalog Number	Code
70	II	247 07S RN 120 R2 FC SS	350452
	III	247 07S RN 120 R3 AY SS	350335
	V	247 07S RN 120 R5 AY SS	350336
100	II	247 10S RN 120 R2 FC SS	350453
	III	247 10S RN 120 R3 AY SS	350366
	V	247 10S RN 120 R5 AY SS	350367
150	II	247 15S RN 120 R2 FC SS	350454
	III	247 15S RN 120 R3 AY SS	350372
	V	247 15S RN 120 R5 AY SS	350373

Note: Luminaires with IES Light Pattern II are equipped with full cutoff optics.

IES II Full Cutoff

IES III & V

Table 3 AVP/Traditionaire (black only)

Lamp Size (watts)	IES Light Pattern	Catalog Number		Code
		American Electric	Cooper	Code
70	III	AVP07SRN120R3AYTL	UTR70SR2334	350327
	V	AVP07SRN120R5AYTL	UTR70SR2554	350328
100	III	AVP10TSRN120R3AYTL	UTR10SR2334	350331
	V	AVP10SRN120R5AYTL	UTR10SR2554	350332
150	III	AVP15SRN120R3AYTL	UTR15SR2334	350360
	V	AVP15SRN120R5AYTL	UTR15SR2554	350361

Post-Top Luminaires (continued)

Table 4 Town and Country - General Electric (black only)

Lamp Size (watts)	IES Light Pattern	Catalog Number	Code
70	III	T10R07S1N2LMS3BL	350179
	V	T10C07S1N2LMS5BL	350315
100	III	T10R10S1N2LMS3BL	350178
	V	T10C10S1N2LMS5BL	350317
150	V	T10C15S1N2LMS5BL	350352

Note: Luminaires are equipped with semi-cutoff optics.

Table 5 Vandermore - General Electric (black only)

Lamp Size (watts)	IES Light Pattern	Catalog Number	Code
Without Spikes			
70	III	V8AD07S1N2X3BLB	350895
	V	V8SD07S1N2X3BLB	350889
100	III	V8AD10S1N2X3BLB	350896
	V	V8SD10S1N2X3BLB	350890
150	III	V8AD15S1N2X3BLB	350897
	V	V8SD15S1N2X3BLB	350891
With Spikes			
70	III	V9AD07S1N2J3BLB	350892
	V	V9SD07S1N2J3BLB	350877
100	III	V9AD10S1N2J3BLB	350893
	V	V9SD10S1N2J3BLB	350887
150	III	V9AD15S1N2J3BLB	350894
	V	V9SD15S1N2J3BLB	350888

Note: Luminaires are equipped with house-side shields.

Post-Top Luminaires (continued)

Table 6 ACN Acorn - Cooper (streetworks generation series)

Lamp Size (watts)	IES Light Pattern	Color	Catalog Number	Code
70	III	Black	ACN70SR233X1X4R	350319
	V		ACN70SR255X1X4R	350321
100	III		ACN10SR233X1X4R	350323
	V		ACN10SR233X1X4R	350325
150	III		ACN15SR233X1X4R	350339
	V		ACN15SR255X1X4R	350341
70	III	Green	ACN70SR233X1X4HR	350320
	V		ACN70SR255X1X4HR	350322
100	III		ACN10SR233X1X4HR	350324
	V		ACN10SR255X1X4HR	350326
150	III		ACN15SR233X1X4HR	350340
	V		ACN15SR255X1X4HR	350342

Note: All luminaires are equipped with full downright reflector.

Table 7 Granville Acorn Holophane

Lamp Size (watts)	IES Light Pattern	Color	Catalog Number	Code
70	III	Black	GVU070HP12B6NNUH	350385
	V		GVU070HP12B8NNUH	350387
100	III		GVU100HP12B6NNUH	350389
	V		GVU100HP12B8NNUH	350391
150	III		GVU150HP12B6NNUH	350393
	V		GVU150HP12B8NNUH	350395
70	III	Green	GVU070HP12N6NNUH	350386
	V		GVU070HP12N8NNUH	350388
100	III		GVU100HP12N6NNUH	350390
	V		GVU100HP12N8NNUH	350392
150	III		GVU150HP12N6NNUH	350394
	V		GVU150HP12N8NNUH	350396

Note: Luminaires are equipped with cutoff optics.

Table 8 Decorative Bands and Top Finial Option for Granville Holophane

Color	Catalog Number	Code
Black	DEC-RBF-BLK	350450
Gold	DEC-RBF-GLD	350451

Note: Bands and finials **must** be ordered at the same time as the luminaires.
A special facilities charge applies to all applications of the decorative bands and finials.

Post-Top Luminaires (continued)

Table 9 Contempo – American Electric Lighting (grey only)

Lamp Size (watts)	IES Light Pattern	Catalog Number	Code
70	III	245 07S RN 120 R3 AY SD SS	350337
	V	245 07S RN 120 R5 AY SD SS	350338
100	III	245 10S RN 120 R3 AY SD SS	350368
	V	245 10S RN 120 R5 AY SD SS	350369
150	III	245 15S RN 120 R3 AY SD SS	350374
	V	245 15S RN 120 R5 AY SD SS	350375

Table 10 Woodbridge – Cooper (grey only)

Lamp Size (watts)	IES Light Pattern	Catalog Number	Code
70	III	MPW70SR2334	350329
	V	MPW70SR2554	350330
100	III	MPW10SR2334	350333
	V	MPW10SR2554	350334
150	III	MPW15SR2334	350362
	V	MPW15SR2554	350363

Table 11 P17M – General Electric (grey only)

Lamp Size (watts)	IES Light Pattern	Catalog Number	Code
70	III	P17M07S1N2AMN3GR	350180
	V [1]	P17M07S1N2AMS5GR	350316
100	V [1]	P17M10S1N2AMS5GR	350318
150	V [1]	P17M15S1N2AMS5GR	350353

[1] IES V luminaires are equipped with semi-cutoff optics.

Post-Top Luminaires (continued)

Table 12 Epic – Cooper (black only)

Lamp Size (watts)	IES Light Pattern	Type	Catalog Number	Code
70	III	Medium	CEM 70SNW3SXBLBK	350898
100		Medium	CEM 10SNW3SXBLBK	350899
150		Medium	CEM 15SPW3SXBLBK	350900
250		Large	CEL 25SNW3SXBLBK	350901
400		Large	CEL 40SNW3SXBLBK	350902

Notes

1. Luminaires are equipped with full cutoff optics.
2. Single and double-arm assemblies for the Epic are found on Table 30 on Page 17.
3. Luminaires are to be mounted on round (smooth) 4” diameter, 18’ poles, or taller. Refer to Table 27 on Page 15.

Table 13 Memphis (Teardrop) – Holophane

Lamp Size (watts)	IES Light Pattern	Type	Catalog Number	Code
70	III	Black	MSP070HP12B4TDSDP120	350358
100			MSP100HP12B4TDSDP120	350381
150			MSP150HP12B4TDSDP120	350398
70		Dark Green	MSP070HP12N4TDSDP120	350359
100			MSP100HP12N4TDSDP120	350397
150			MSP150HP12N4TDSDP120	350399

Notes

1. Luminaires are equipped with cutoff optics and house-side shields.
2. Single and double-arm assemblies for the Memphis (teardrop) are found on Table 29 on Page 16.
3. Luminaires are to be mounted on round (smooth) 5” diameter, 16’ posts, or taller. Refer to Table 26 on Page 15 through Table 25 on Page 14.
4. Follow manufacturer instructions for installation. Sealant must be used to prevent water intrusion.

Decorative Streetlighting

Embedded Posts

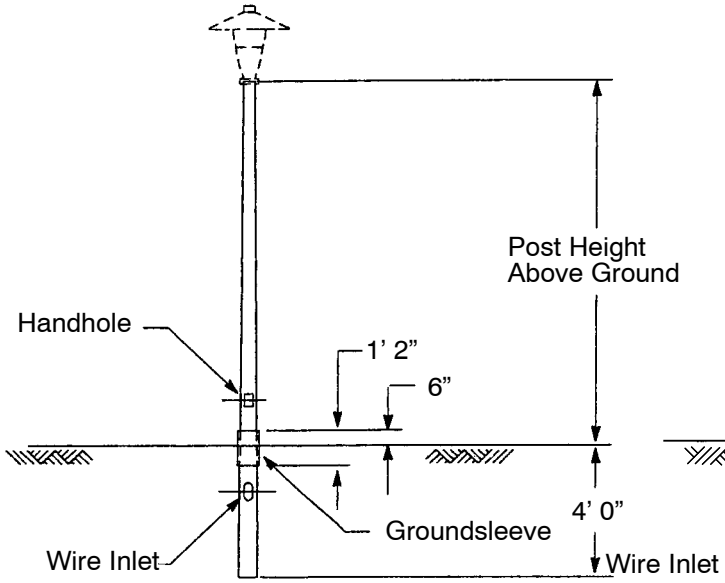

Figure 2
Embedded Steel Posts

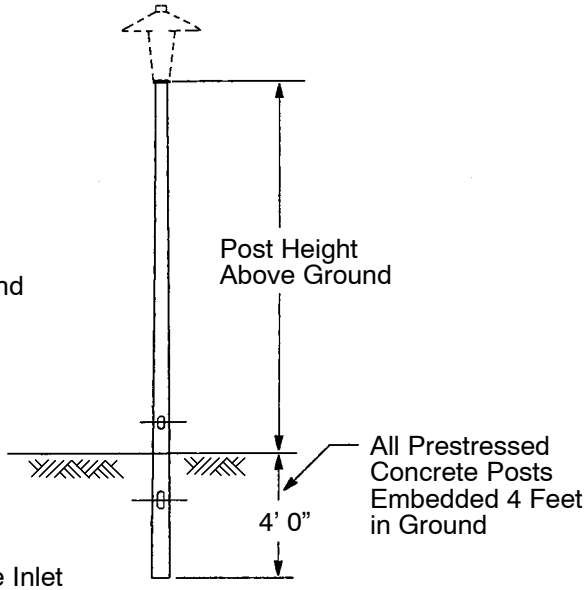

Figure 3
Prestressed Concrete Post

Table 14 Embedded Steel Posts (galvanized) (10 or 11 gage) Figure 2

Height Above Ground	Post Size	Manufacturer	Catalog Number	Code
12'	2-7/8" x 5-1/4" x 16'	Ameron	1PGF–120–10–(136)	357248
	3" x 5.24" x 16'	Valmont	DB 00755 (12')	
14'	2-7/8" x 5-1/4" x 18'	Ameron	1PGF–140–10–(136)	357249
	3" x 5.52" x 18'	Valmont	DB 00755 (14')	
16'	2-7/8" x 5-1/4" x 20'	Ameron	1PGF–160–10–(136)	357250
	3" x 5.80" x 20'	Valmont	DB 00755 (16')	

Table 15 Embedded Prestressed Concrete Posts (Figure 3) (Gray Terrazo exposed aggregate)

Height Above Ground	Post Size	Manufacturer	Catalog Number	Code
12'	5" x 7.2" x 16' 0"	Ameron	SER4-123A-T	357132
	5" x 7' x 16' 0"	Traditional Concrete	D312-SG-EA-3T	
14'	5" x 7.45" x 18' 0"	Ameron	SER4.3-123A-T	357133
	5" x 7-1/4" x 18' 0"	Traditional Concrete	D314-SG-EA-3T	
16'	5" x 7.75" x 20' 0"	Ameron	SER5-123A-T	357134
	5" x7-1/2" x 20' 0"	Traditional Concrete	D316-SG-EA-3T	

Embedded Posts (continued)

Table 16 Embedded Fiberglass Posts (minimum wall thickness: 5/32”) (similar to Figure 3 on Page 8)

Color	Post Size	Manufacturer	Catalog Number	Code
12” Post Height				
Gray	3-1/4” x 6-1/2” x 16’	W. J. Whatley	RT34–12–DE–GRY–TXT–30–35	357245
	3-1/2” x 7” x 16’	Shakespeare	BS16–01N2BE12	
Brown	3-1/2” x 7” x 16’	Shakespeare	BS16–01N3BE12	357246
Bronze	3-1/4” x 6-1/2” x 16’	W. J. Whatley	RT34–12–DE–DBZ–TXT–30–35	357253
	3-1/2” x 7” x 16’	Shakespeare	BS16–01N5BE12	
Green	3-1/4” x 6-1/2” x 16’	W. J. Whatley	RT34–12–DE–DGR–TXT–30–35	357255
	3-1/2” x 7” x 16’	Shakespeare	BS16–01N4BE12	
Black	3-1/4” x 6-1/2” x 16’	W. J. Whatley	RT34–12–DE–DGR–TXT–30–35	357256
	3-1/2” x 7” x 16’	Shakespeare	BS16–01N1BE12	
14’ Post Height				
Gray	3-1/4” x 7” x 18’	W. J. Whatley	RT34–14–DE–GRY–TXT–30–35	357257
	3-1/2” x 8” x 18’	Shakespeare	BS18–01N2BE12	
Brown	3-1/2” x 8” x 18’	Shakespeare	BS18–01N3BE12	357258
Bronze	3-1/4” x 7” x 18’	W. J. Whatley	RT34–14–DE–DBZ–TXT–30–35	357259
	3-1/2” x 8” x 18’	Shakespeare	BS18–01N5BE12	
Green	3-1/4” x 7” x 18’	W. J. Whatley	RT34–14–DE–DGR–TXT–30–35	357260
	3-1/2” x 8” x 18’	Shakespeare	BS18–01N4BE12	
Black	3-1/4” x 7” x 18’	W. J. Whatley	RT34–14–DE–BLK–TXT–30–35	357261
	3-1/2” x 8” x 18’	Shakespeare	BS18–01N1BE12	
16’ Post Height				
Gray	3-1/4” x 7-1/4” x 20’	W. J. Whatley	RT34–16–DE–GRY–TXT–30–35	357262
	3-1/2” x 8” x 20’	Shakespeare	BS20–01N2BE12	
Brown	3-1/2” x 8” x 20’	Shakespeare	BS20–01N3BE12	357263
Bronze	3-1/4” x 7-1/4” x 20’	W. J. Whatley	RT34–16–DE–DBZ–TXT–30–35	357264
	3-1/2” x 8” x 20’	Shakespeare	BS20–01N5BE12	
Green	3-1/4” x 7-1/4” x 20’	W. J. Whatley	RT34–16–DE–DGR–TXT–30–35	357265
	3-1/2” x 8” x 20’	Shakespeare	BS20–01N4BE12	
Black	3-1/4” x 7-1/4” x 20’	W. J. Whatley	RT34–16–DE–BLK–TXT–30–35	357266
	3-1/2” x 8” x 20’	Shakespeare	BS20–01N1BE12	

Embedded Posts (continued)

Table 17 Concrete Decorative Posts – Ameron (natural gray with graffiti resistant finish)

Washington			
Post Height	Style	Catalog Number	Code
9’ 6”	Embedded	26ET10	350659
12’		26ET12	350660
14’ 6”		26ET14	350661
Washington – Base OD = 21” Diameter Embedment Depth = 4’			
Victorian III			
12’ 2”	Embedded	VE03.7	350671
14’ 9”		VE04.5	350672
15’ 9”		VE04.8	350673
Victorian – Base – OD = 18” Diameter Embedment Depth = 5’			
Corsican			
12’ 9”	Embedded	20ET12	350665
15’		20ET15	350666
Corsican – Base OD = 19-1/2” Diameter Embedment Depth = 4’ 1”			

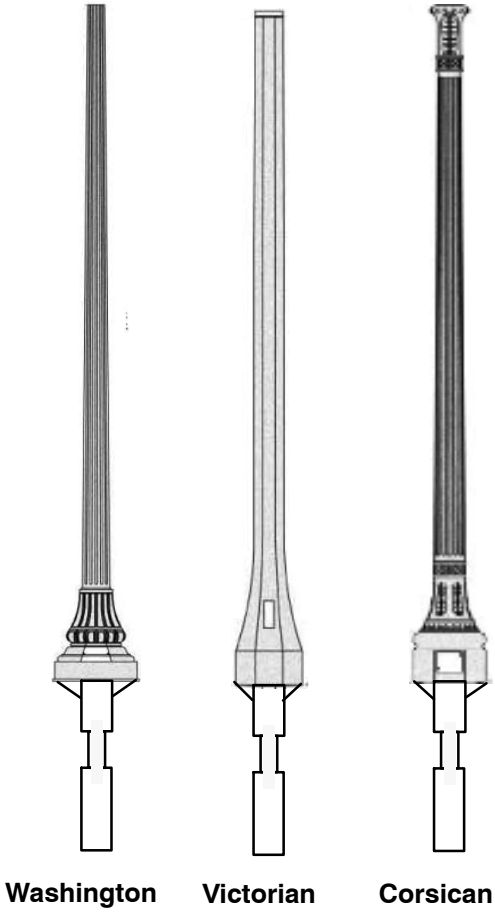

Figure 4
Concrete Decorative Posts

Foundation-Mounted Posts

Table 18 Steel Posts – (galvanized) (10 or 11 gage) (Figure 5)

Post Height	Post Size	Manufacturer	Catalog Number	Code
12’	3.575” x 5.52” x 12’ 0”	Ameron	PGF 120–10–(1315)	357135
	3” x 4.68” x 12’ 0”	Valmont	DS200–468A100–GV–HH–FBC–LAB	
14’	3.275” x 5.25” x 14’ 0”	Ameron	PGF140–(1316)	357136
	3” x 4.96” x 14’ 0”	Valmont	DS200–496A120–GV–HH–FBC–LAB	
16’	2.975” x 5.25. x 16’ 0”	Ameron	PGF160–(1317)	357137
	3” x 5.24” x 12’ 0”	Valmont	DS200–524A160–GV–HH–FBC–LAB	
Anchor Bolts: 3/4” on an 8” diameter, 3-bolt pattern				

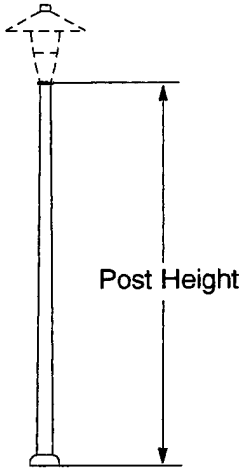

Figure 5
Steel and Aluminum Post

Table 19 Aluminum Posts – (wall thickness: 0.125”) (Figure 5)

Post Height	Post Size	Manufacturer	Catalog Number	Code
12’	3” x 5” x 12’ 0”	Valmont	120030504T3A-SBF-LAB	357138
14’	3” x 5” 14’ 0”	Valmont	140030504T3A-SBF-LAB	357139
16’	3” x 5” x 16’ 0”	Valmont	160030504T3A-SBF-LAB	357140
Anchor Bolts: 3/4” on an 8” diameter, 3-bolt pattern				

Table 20 Concrete Post (Figure 6)

Post Height	Manufacturer	Catalog Number	Code
9’ 6”	Ameron	26ST10	350662
12’		26ST12	350663
14’ 6”		26ST14	350664
Anchor Bolts: 1” on a 6-1/2” diameter, 4-bolt pattern Base OD= 21” diameter			

Washington

Figure 6
Concrete Post

Foundation-Mounted Posts (continued)

Table 21 Extruded Aluminum Posts – Cooper (black only) (Figure 7)

Washington			
Post Height	Shaft	Catalog Number	Code
12’	Round	WA31242RT5BKG	350832
	Fluted	WA31242SF5BKG	350835
14’	Round	WA31442RT5BKG	350833
	Fluted	WA31442SFBKG	350836
16’	Round	WA31642RT5BKG	350834
	Fluted	WA31642SF5BKG	350837
Anchor Bolts: 3/4” on a 10-3/4” diameter, 4-bolt pattern Base OD = 17”			

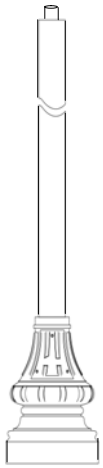

Figure 7
Washington Extruded Post

Table 22 Extruded Aluminum Posts/Poles – Cooper (black only) (Figure 8)

Broadway			
Post Height	Shaft	Catalog Number	Code
12’	Round	BWR1241RT5BKG	350838
	Fluted	BWR1241SF5BKG	350856
14’	Round	BWR1441RT5BKG	350839
	Fluted	BWR1441SF5BKG	350867
16’	Round	BWR1641RT5BKG	350840
	Fluted	BWR1641SF5BKG	350868
Anchor Bolts: 3/4” on a 12” diameter, 4-bolt pattern			

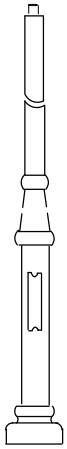

Figure 8
Broadway Extruded Post

Table 23 Extruded Aluminum Posts With Decorative Bases – Cooper (black only) (Figure 9)

Chesapeake			
Post Height	Shaft	Catalog Number	Code
12’	Round	CPR1242RT5BKG	350674
	Fluted	CPR1242SF5BKG	350835
14’	Round	CPR1442RT5BKG	350675
	Fluted	CPR1442SF5BKG	350816
16’	Round	CPR1642RT5BKG	350720
	Fluted	CPR1642SF5BKG	350831
Anchor Bolts: 3/4” on a 13-1/4” diameter, 4-bolt pattern Base OD = 12” square			

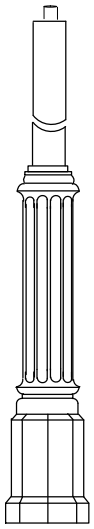

Figure 9
Chesapeake Extruded Aluminum Post with Decorative Base

Foundation-Mounted Posts (continued)

Table 24 Extruded Aluminum Posts – Holophane (Figure 10)

Charleston					
Post Height	Shaft Diam.	Shaft Style	Color	Catalog Number	Code
12’	4”	Fluted	Black	CH12F412CABKHLAB	350402
			Green	CH12F412CADGHLAB	350401
		Smooth	Black	CH12S412CABKHLAB	350403
			Green	CH12S412CADGHLAB	350404
	5”	Fluted	Black	CH12F512CABKHLAB	350405
			Green	CH12F512CADGHLAB	350406
		Smooth	Black	CH12S512CABKHLAB	350407
			Green	CH12S512CADGHLAB	350408
14’	4”	Fluted	Black	CH14F412CABKHLAB	350409
			Green	CH14F412CADGHLAB	350410
		Smooth	Black	CH14S412CABKHLAB	350411
			Green	CH14S412CADGHLAB	350412
	5”	Fluted	Black	CH14F512CABKHLAB	350413
			Green	CH14F512CADGHLAB	350414
		Smooth	Black	CH14S512CABKHLAB	350415
			Green	CH14S512CADGHLAB	350416
16’	5”	Fluted	Black	CH16F512CABKHLAB	350417
			Green	CH16F512CADGHLAB	350418
		Smooth	Black	CH16S512CABKHLAB	350419
			Green	CH16S512CADGHLAB	350420
Use 5” diameter shaft posts when a crossarm is used. Anchor Bolts: 3/4” on a 7” diameter, 4–bolt pattern Base OD = 11–1/2”					

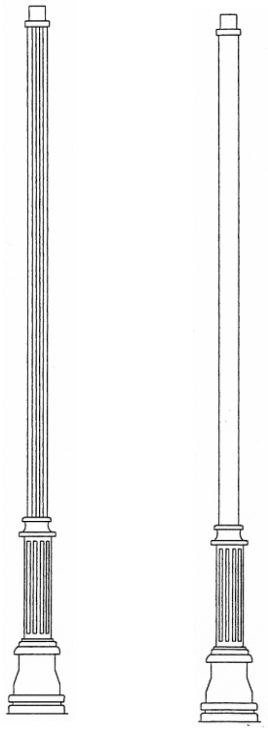

Figure 10
Charleston Extruded Aluminum Post

Decorative Posts

Table 25 Extruded Aluminum Posts – Holophane (Figure 11)

Hamilton					
Post Height	Shaft Diam.	Shaft Style	Color	Catalog Number	Code
12’	4”	Fluted	Black	H12F416CABKHLAB	350421
			Green	H12F416CADGHLAB	350422
		Smooth	Black	H12S416CABKHLAB	350423
			Green	H12S416CADGHLAB	350424
	5”	Fluted	Black	H12F516CABKHLAB	350425
			Green	H12F516CADGHLAB	350426
		Smooth	Black	H12S516CABKHLAB	350427
			Green	H12S516CADGHLAB	350428
14’	4”	Fluted	Black	H14F416CABKHLAB	350429
			Green	H14F416CADGHLAB	350430
		Smooth	Black	H14S416CABKHLAB	350431
			Green	H14S416CADGHLAB	350432
	5”	Fluted	Black	H14F516CABKHLAB	350433
			Green	H14F516CADGHLAB	350434
		Smooth	Black	H14S516CABKHLAB	350435
			Green	H14S516CADGHLAB	350436
16’	5”	Fluted	Black	H16F516CABKHLAB	350437
			Green	H16F516CADGHLAB	350438
		Smooth	Black	H16S516CABKHLAB	350439
			Green	H16S516CADGHLAB	350440
Use 5” posts when a crossarm is used. Anchor Bolts: 3/4” on an 11” diameter, 4–bolt pattern Base OD = 16”					

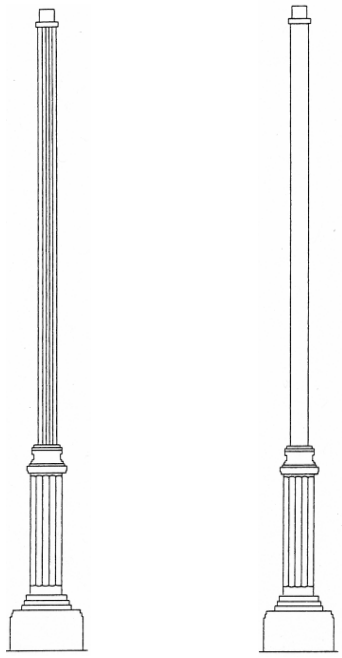

Figure 11
Hamilton Extruded Aluminum Post

Decorative Poles

Table 26 Cast Iron and Steel Pole – Holophane (black only) (Figure 12)

Columbia and Delaware			
Post Height	Style	Catalog Number	Code
20’	Columbia	C20/20–CIS/BKH	350907
20’ 6”	Delaware	D21/15–CIS/BKH	350908

Columbia – Anchor Bolts: 3/4” on a 15” diameter, 4-bolt pattern
Base OD = 20”

Delaware – Anchor Bolts: 3/4” on a 10” diameter, 4-bolt pattern
Base OD = 15”

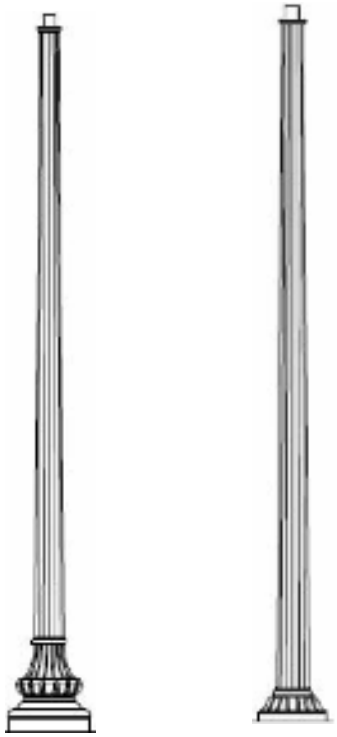

Figure 12
Cast Iron and Steel Pole Holophane

Table 27 Extruded Aluminum Poles – Cooper (black only) (Figure 13)

Broadway			
Post Height	Shaft	Catalog Number	Code
18’	Round	BWR1852RT5BKG	350841
20’	Round	BWR2062RT5BKG	350842
25’	Round	BWR2563RT5BKG	350843
30’	Round	BWR3063RT5BKG	350844
Anchor Bolts: 1” on a 12” diameter, 4-bolt pattern The Broadway pole is for use with the epic luminaire mounts.			

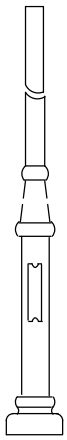

Figure 13
Broadway
Extruded Pole

Luminaire Mounts

Table 28 Twin Fixture Crossarm (use with Acorn or other luminaires)(Figure 14)

Color	Catalog Number	Code
Black	PCP36-CABK	350442
Green	PCP36-CADG	350441

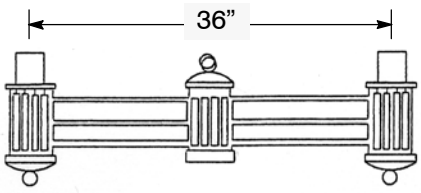

Figure 14
Twin Fixture Crossarm

Table 29 Twin and Single Fixture Crossarms – for Pendant Style Luminaires (Figure 15)

Twin Fixture Crossarms		
Color	Catalog Number	Code
Black	PCP36(INV)–BK	350448
Green	PCP36(INV)–DG	350449
Single Fixture Crossarm		
Black	PCP18(INV)–BK	350446
Green	PCP18(INV)–DG	350447

Note: Use with Memphis (Teardrop) luminaires; **use only** with 16’ posts, or taller.

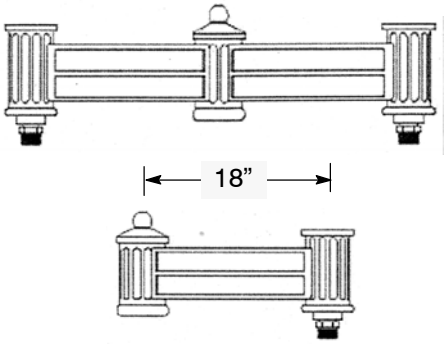

Figure 15
Twin and Single Fixture Crossarm

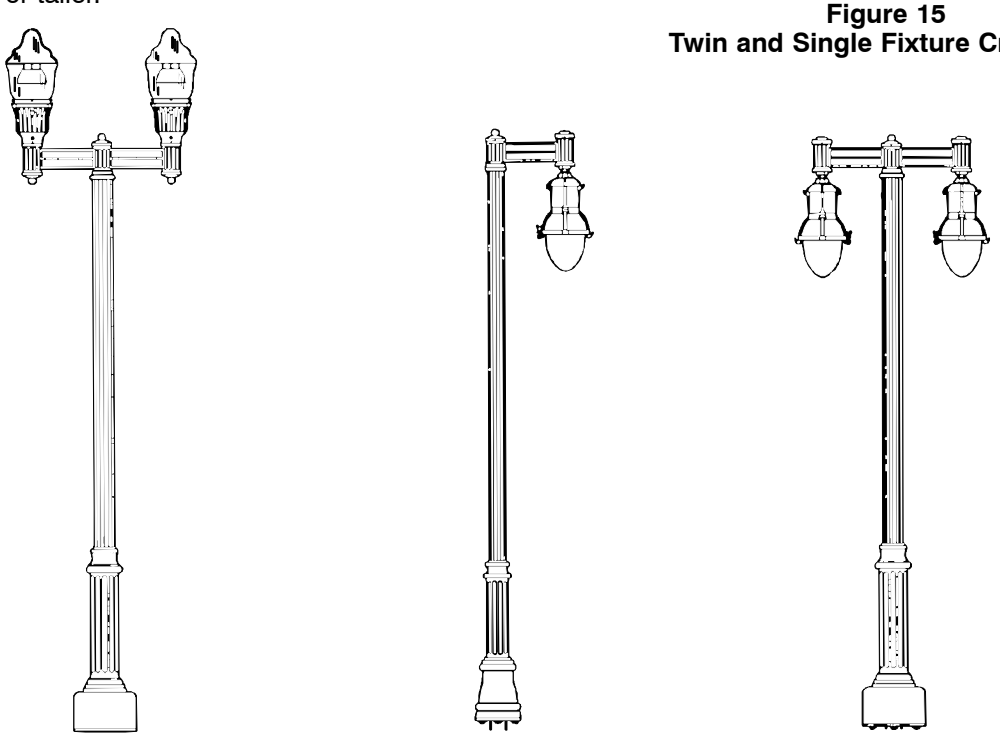

Figure 16
Typical Crossarm Installations

Notes

1. Photocontrol orientation– with twin fixtures, for proper operation of both lights, neither photocontrol can face the other light. This may mean turning one or both controls in a more easterly or westerly direction instead of the normal northerly direction.

Luminaire Mounts (continued)

Table 30 Single and Twin-Arm Pole Mounts for Epic Luminaire – Cooper

Arm	Luminaire	Catalog Number	Code
Single	Epic – Medium	SA6154–BK–4	350903
	Epic – Large	SA6054–BK–4	350904
Twin	Epic – Medium	SA6156–BK–4	350905
	Epic – Large	SA6056–BK–4	350906

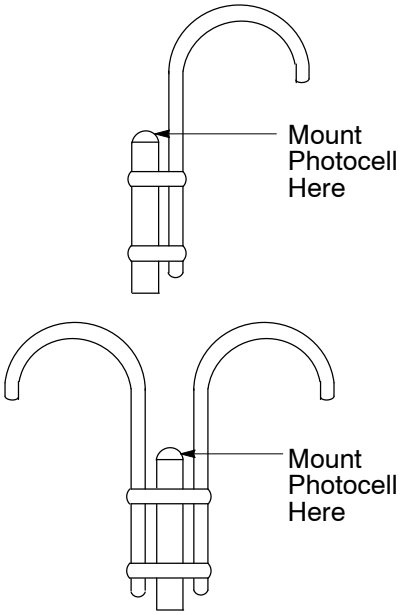

Figure 17
Single and Twin-Arm Pole Mounts

Notes

1. Single and twin-arm pole mounts for the Epic luminaire are designed for slip fit on a 4” diameter cylindrical pole (Broadway pole).
2. **Use Only** on 16’ pole, or taller.
3. Complete with photocell kit.

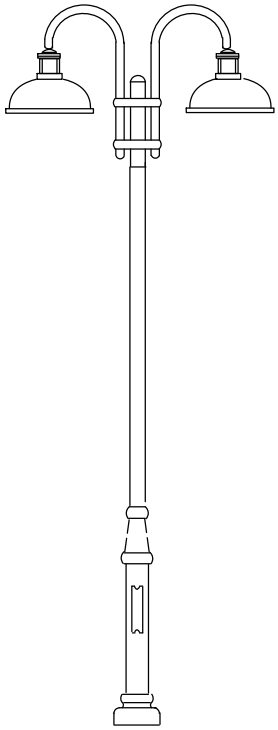

Figure 18
Typical Epic Installation

Foundations

Embedded Posts

Installation Notes for all Embedded Posts

1. The bottom of the post holes shall be well tamped before installing the post. Judgment, based on experience and local soil conditions, should be used to determine if “rocking-in” of the post is required. All backfill is to be tamped thoroughly.
2. To transition from 2” conduit into the 2” wire inlet on most embedded posts and the direct burial base, use a 2” to 1-1/2” swedge reducer, code 360080. Use a short piece of 1-1/2” conduit to enter the base.

Table 31 Direct Burial Galvanized Steel Base

Item	Manufacturer	Catalog Number	Code
4’ Direct Burial Galvanized Foundation	Holophane	AOL-11726–02	350445

Note: The direct burial foundation is designed with a 4-bolt pattern and has slotted holes that will accommodate posts with bolt circles from 7” diameter to 11” diameter (see Figure 19 below). The foundation is suitable for use with Holophane Charleston and Hamilton posts and Cooper Broadway post (see Figure 20 below). Install post similar to embedded posts. In some cases, such as with replacement of centerbored wood poles, dry-mix concrete at the base of the foundation may be useful.

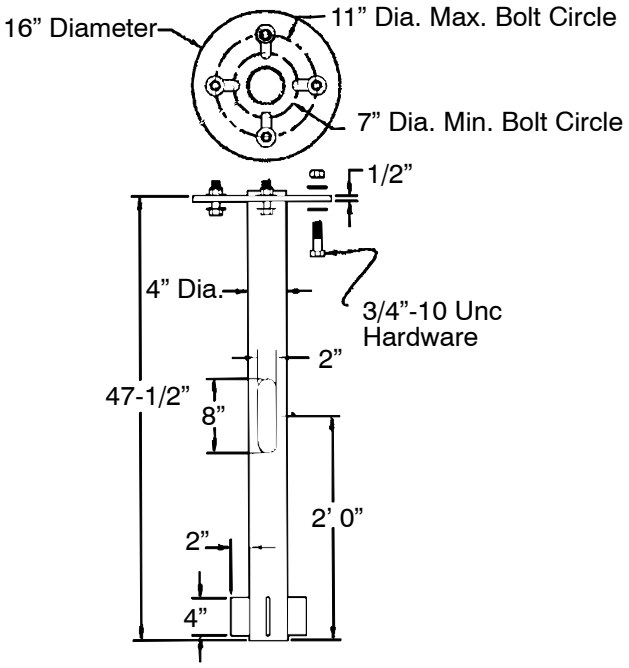

Figure 19
Details of Steel Direct Burial Base

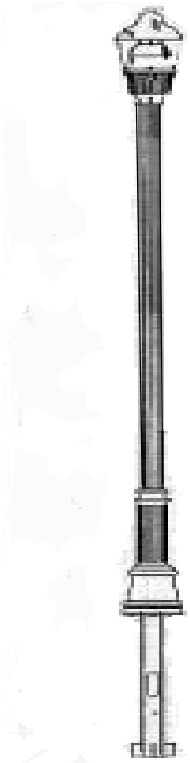

Figure 20
Typical Direct Burial Base Installation

Foundations (continued)

Precast Concrete Foundation

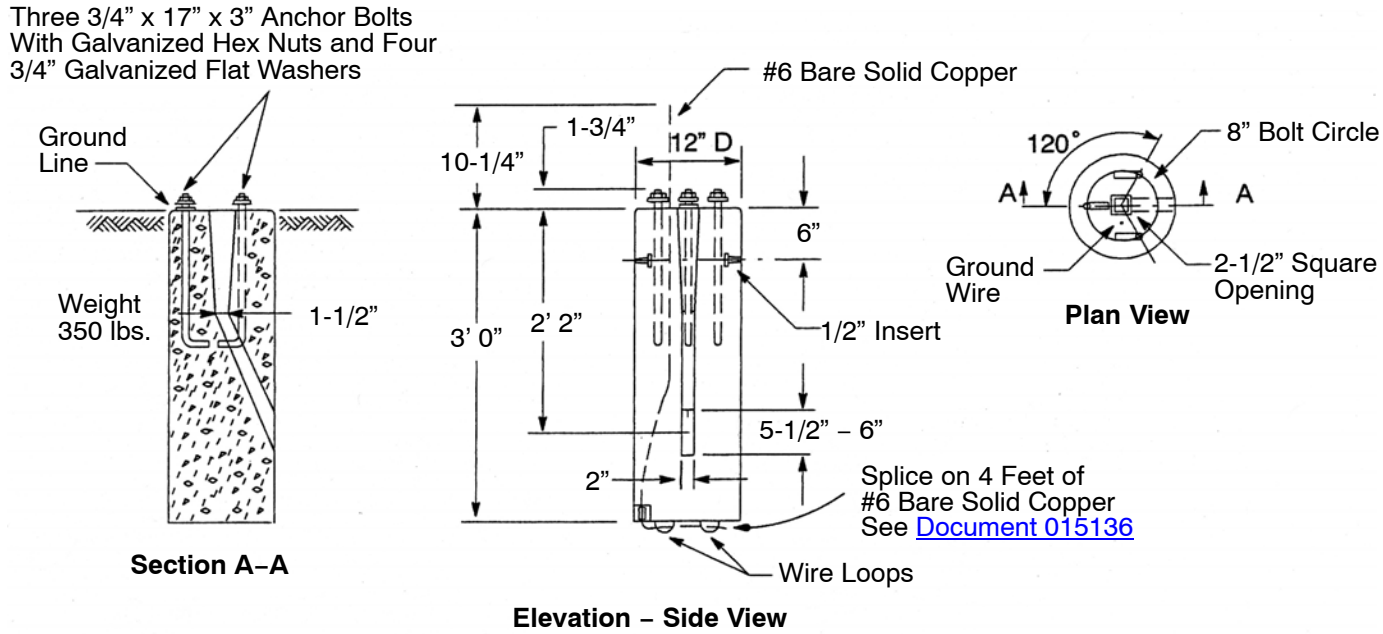

Figure 21
Precast Concrete Foundation for 3-Bolt Streetlight Posts
Code 043351

Table 32 Anchor Bolts With Templates – for Cast-In-Place 4-Bolt Installations (see Figure 22 on Page 20)

Item	Catalog Number	Code
Anchor Bolts (3/4" x 17" x 3") With 8" Dia. Template	ANBOLT–8	350443
Anchor Bolts (3/4" x 17" x 3") With 11" Dia. Template	ANBOLT–11	350444

Table 33 Anchor Bolts [1] Without Templates – for Cast-In-Place Installations

Size	Code
3/4" x 17" x 3"	190081
1" x 36" x 4"	190076

[1] Hot-dipped galvanized, with two galvanized regular hex nuts and two galvanized round washers. 6" minimum thread length.

Foundations (continued)

Typical Cast-In-Place Foundations

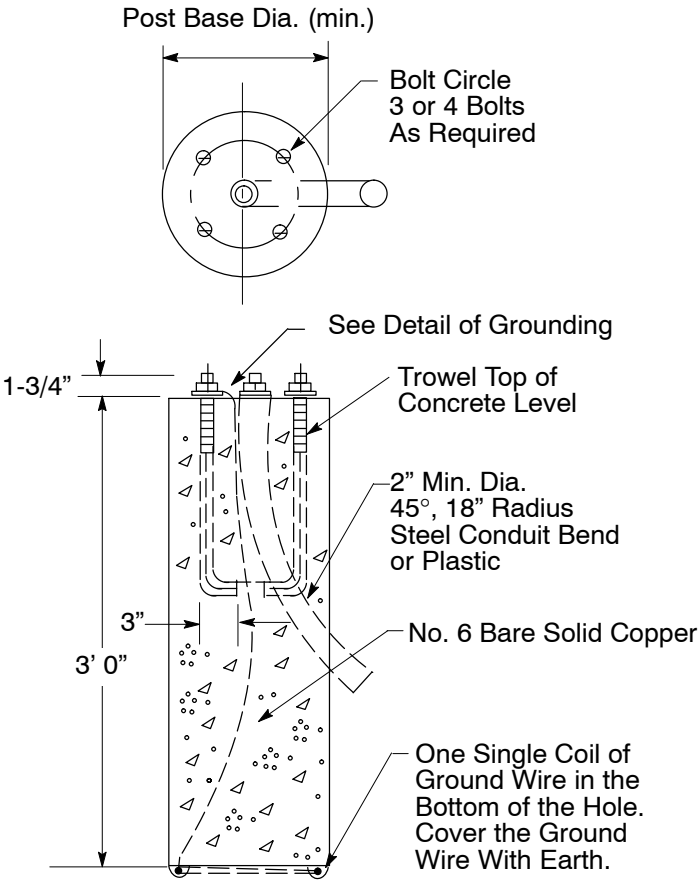

Foundation With 3/4” Anchor Bolts

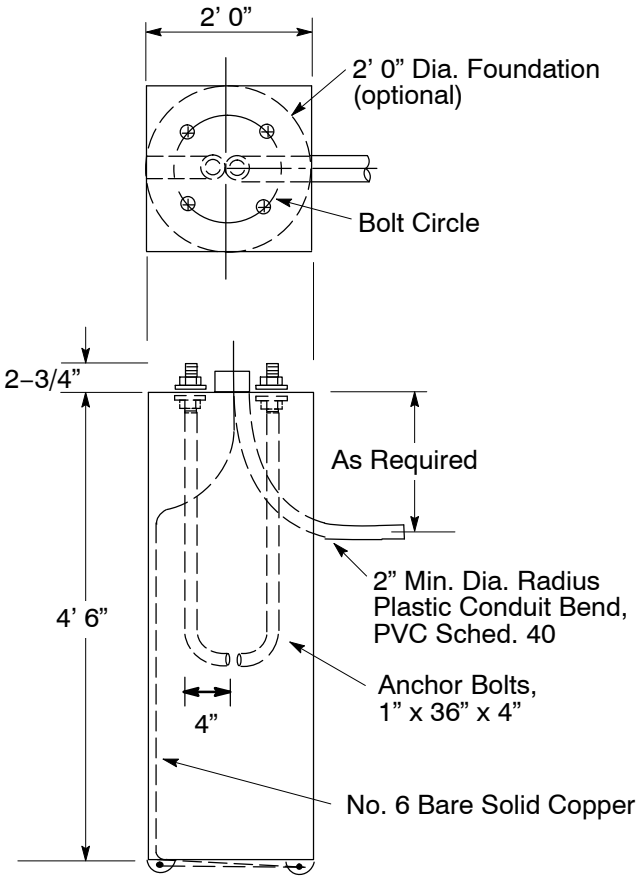

**Foundation (square or round)
With 1” Anchor Bolts**

**Figure 22
Typical Foundation Details for Cast-In-Place Foundations**

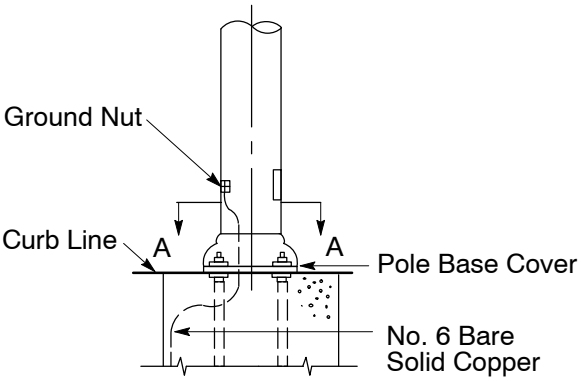

Grounding Details

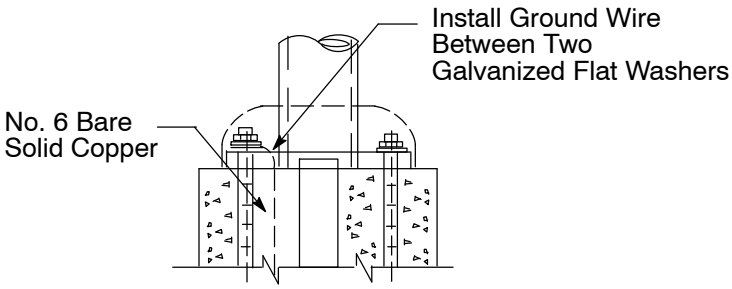

**Detail of Grounding for Steel
and Aluminum Posts
(alternate)**

Base Adapter – 3-Bolt to 4-Bolt

Use

This adapter can be used to mount a Charleston post with a 3/4” 4-bolt pattern on a 7” diameter bolt circle to a 3/4” 3-bolt 120° pattern on an 8” diameter bolt circle.

Materials

All steel construction consisting of four spacer blocks sandwiched by two 12-1/2” diameter by 1/2” adapter plates. A steel concealment cover is provided. 3/4” base mounting hardware shall be hot-dip galvanized steel. Concealment cover hardware shall be tamper-resistant stainless steel.

Dimensions

12-1/2” diameter by 4” tall with a 5” diameter wireway opening.

Finish

Black powder coat finish.

Ordering Information

Manufacturer: Holophane

Part Number ADPT3BOLTU6136

Material Code: 350357

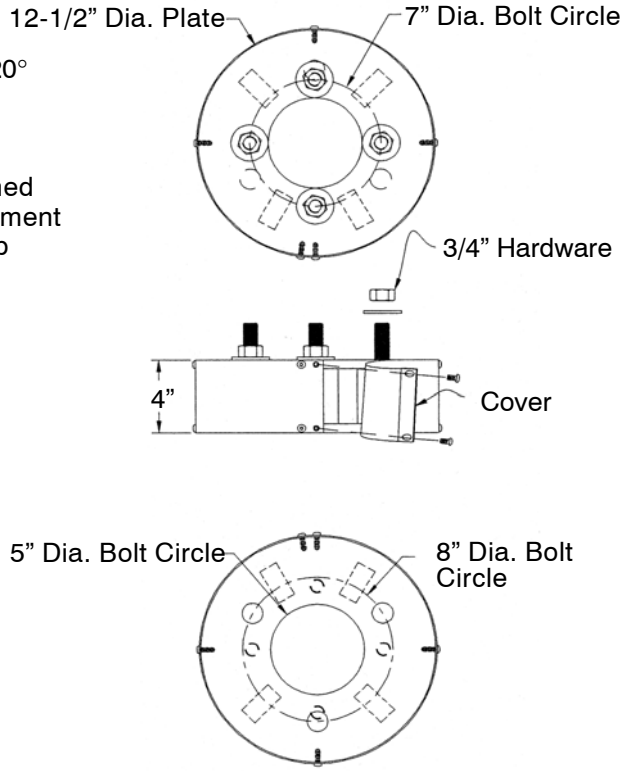

Figure 23
3-Bolt/4-Bolt Base Adapter

Revision Notes

Revision 04 has the following changes:

1. Revised Table 12 on Page 7.
2. Revised Table 30 on Page 17.
3. Added Note 3 on Page 17.
4. Added note to Figure 17 on Page 17.

Prepared by: ABB1

PG&E	**UNDERGROUND CONDUITS**	**062288**

Asset Type:	Electric Distribution	**Function:**	Design and Construction
Issued by:	Lisseth Villareal (LDV2)	**Date:**	07-01-14

Rev. #14: This document replaces PG&E Document 062288, Rev. #13 For a description of the changes, see Page 22.

Purpose and Scope

This document covers steel and plastic conduit for underground installations, with or without concrete encasement.

General Information

1. Applications for underground conduit are as follows:
   A. Residential: All residential installations requiring conduit should be made without concrete encasement.
   B. Light Commercial, Industrial, and Underground Residential Distribution (URD) Feeder: Installation of circuits of this type, which are three-way or less, should normally be made without concrete encasement. In densely populated urban areas, conduit banks involving more than three primary conduits will normally require concrete encasement.
   C. Severe exposure to “dig-ins” and other hazards may require concrete encasement of conduit lines.
2. When conduit, including service conduit, is to be installed for PG&E by others, the following are acceptable alternatives to the American Society of Testing and Materials (ASTM) F512 (DB120) conduits listed in this document:
   A. PVC Schedule 40 or 80 UL 651 conduit that is so marked.
   B. Hot-dip galvanized rigid steel conduit conforming to American National Standards Institute (ANSI) Specification C80.1.

   It is the installer’s responsibility to use the proper fitting to join conduits. This transition may involve changes in both conduit type and size. If equal diameter conduits of different wall thicknesses are joined, the inside edge of the spigot end must be chamfered.
3. The current carrying capacity of an insulated cable is reduced if it is surrounded by other loaded cables. For this reason, conduit banks should be arranged so that each conduit is in an outside position.
4. Every effort should be made to obtain a straight, watertight conduit line.
5. In commercial distribution systems, consideration should be given to providing one or more spare conduits in the original construction for future load growth requirements. The addition of such conduits at a later time is much more costly.
6. A mandrel shall be used to prove that all conduits are free and clear of dirt, rocks, and other debris.
7. A pulling tape with sequential footage markings (code 560154) shall be installed in all conduits and attached to an end cap. The tape shall be proven free and not glued or caught on joints.
8. All conduits shall be capped. All conduits not terminating in a subsurface enclosure, pedestal, or vault are to be capped with unglued rigid caps (see Table 12 on Page 7). Conduits terminating in a subsurface enclosure, pedestal, or vault shall be capped with temporary plugs (see Table 12 on Page 7).
9. When the intrusion of water into buildings can be reasonably expected through lateral service ducts, PG&E is responsible for sealing both ends of the conduit (refer to Document 063927 and Document 063928). The Rayflate Duct Sealing System (RDSS) conduit sealing system can be ordered for this purpose with approval from electric standards personnel.

Material Specifications

10. Plastic conduits and fittings shall comply with the latest revision of ASTM Standard F512 for PVC. In addition, the conduit shall also meet the following specific requirements:
    A. Conduit cell classification of 12164-B or 12264-B, tensile modulus of 500,000 psi.
    B. Fittings cell classification of 12234-B.
    C. Marking shall conform to ASTM Standard F512 requirements.
    D. The inside edge of conduit ends (spigot-end only in the case of belled-end conduit) shall be beveled to eliminate sharp edges and minimize the possibility of cable damage.
    E. PVC conduit and fittings will be gray in color.

Application

11. Plastic conduit may be cut with a hacksaw or a fine-toothed wood saw. Clean off burrs. Bevel the inside to eliminate sharp edges.
12. Apply a thin, uniform coat of cement to both surfaces to be glued. Avoid excessive use of cement to prevent the formation of a bead of cement on the interior shoulder of the joint since, when hardened, the bead can cause cable damage during installation. Immediately after applying the coat of cement to the conduit, insert the conduit into the fitting socket until it bottoms at the fitting shoulder. Turn the conduit 1/4 turn during insertion to distribute the cement evenly. Hold the conduit in place for about 1 minute to prevent backing out in case of tight interference fit joints. Wipe any excess cement away from the outside of the joint. Weather conditions may vary the curing time. When using cement in confined areas, adequate ventilation must be provided.

Table 1 Cement for Use With Plastic Conduits

Application	Quantity	Code	Manufacturer	Part Number
PVC to PVC	1 Quart	490157	Oatey	30886
	1 Pint	490151	Oatey	30885

13. Backfill containing large rock, paving material, cinders, large amounts of sharply angular substance, or corrosive material shall not be placed in excavations where such material may damage conduits, prevent adequate compaction of the fill, or contribute to corrosion of the conduits.
14. End bells are to be used to terminate all conduits, unless the conduit has been terminated in an enclosure equipped with duct terminators. Cable protectors are to be used on reconstruction projects only, when end bells cannot be installed.
15. In applications where a conduit dead-ends, cap the end of the conduit and place a marker ball (material code 374947) at the location.
16. Conduits shown in Table 10 (HDPE) and Table 11 (Bore-Gard) on Page 6 are for directional boring applications only.
17. **Caution:** When pulling conduits in boring applications, be certain to cut the conduits allowing sufficient extra length for the conduit to relax. It may take as long as 72 hours for an excessively stretched conduit to fully relax.
18. **Caution:** Snap-N-Stac Combo Spacers should be used in concrete encased application.
19. Conduit shown on Table 19 through Table 27 (flexible conduit) on Page 10 through Page 16 are for use in areas with minor soil settlement issues, and for large radius sweeps or re-routes.

Underground Conduits

References	Location	Document
Underground Duct Lines Concrete Encased	FRO: UG Conduit	031792A
Underground Conduit Without Concrete Encasement	FRO: UG Conduit	031793A
Methods and Requirements for Installing Residential Underground Electric Services 0–600 V to Customer-Owned Facilities	UG-1: Services/Greenbook	063927
Methods and Requirements for Installing Commercial Underground Electric Services 0-600 Volts to Customer-Owned Facilities	UG-1: Services/Greenbook	063928
Engineering Material Specification 64, “Polyvinyl Chloride (PVC), Conduits, and Fittings”	TIL	EMS64
Engineering Material Specification 99, “Underground Electric Duct System (installed by applicant)”	TIL	EMS99
Engineering Material Specification 4123, “Backfill Sand”	TIL	EMS4123

Rigid Steel Conduit and Fittings

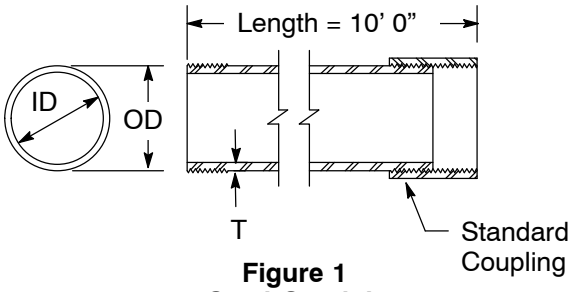

Figure 1
Steel Conduit

Table 2 Codes for Rigid Steel Conduit

Conduit Size (inches)	Dimensions (inches)			Weight (lbs.)[1]	Code
	OD	ID	T		
2	2.4	2.06	0.154	33	362103
3	3.5	3.06	0.216	69	362092
4	4.5	4.02	0.237	98	362093
5	5.6	5.04	0.258	134	362104
6	6.6	6.06	0.280	177	362141

[1] Weight for one 10-foot length, including one standard coupling furnished with each length.

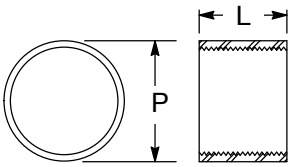

Figure 2
Steel Coupling

Table 3 Codes for Standard Steel Coupling

Conduit Size (inches)	Dimensions (inches)		Code
	P	L	
2	2.73	2.18	362105
3	4.00	3.25	362094
4	5.00	3.50	362095
5	6.29	3.75	362106
6	7.39	4.00	362142

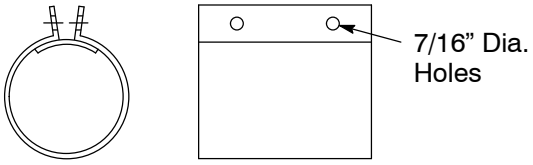

Figure 3
Split Coupling

Table 4 Codes for Galvanized Steel Split Coupling

Conduit Size (inches)	Code
2	362019
3	362021
4	362023
5	362107
6	362143

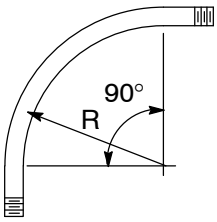

Figure 4
Conduit Sweep
Threaded Both Ends

Table 5 Codes for 90° Steel Conduit Sweeps, TBE

Conduit Size (inches)	Radius (inches)	Code
2	24	360081
3	36	362091
4	36	362090
	60	360812
5	36	362109
6	36	362144
	48	362145
	60	360813

Plastic Conduit and Fittings

Notes

1. The depth of all couplings, adapters, swedge reducers, and bell ends shall conform to the requirements listed in Table 2 of ASTM Standard F–512.

Table 6 Data and Codes for Rigid Plastic Conduit DB120 [1]

Conduit Size (inches)	Dimensions (inches)				Code
	Outside Diameter	Minimum ID	Wall Thickness		
			Minimum	Maximum	
2	2.375	2.161	0.077	0.107	016468
3	3.500	3.204	0.118	0.148	016471
4	4.500	4.132	0.154	0.184	016472
5	5.563	5.121	0.191	0.221	016473
6	6.625	6.111	0.227	0.257	016474

[1] See Note 10 on Page 2 for material specifications.

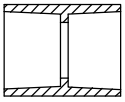

Figure 5
Standard Coupling

Table 7 Codes for Standard Couplings [1]

Standard Coupling		
Conduit Size (inches)	Code	Minimum Socket Depth
2	360321	1.75
3	360322	2.875
4	360323	3.375
5	360401	4.0
6	360482	5.0

[1] Standard couplings made from DB-60 conduit are acceptable.

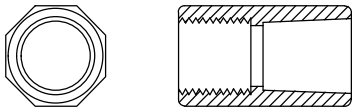

Figure 6
Plastic-to-Steel Adapter

Table 8 Codes for Plastic-to-Steel Adapters

Conduit Size (inches)	Code
2	360324
3	360325
4	360326
5	360402
6	360489

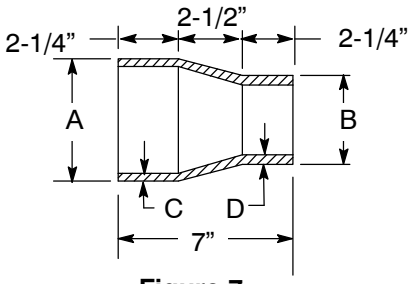

Figure 7
Swedge Reducer

Table 9 Data and Codes for Swedge Reducers

Reducer Size (inches)	Dimensions (inches)				Code
	OD		Min. Wall Thickness		
	A	B [1]	C	D	
3 x 2	3.500	2.375	0.60	0.60	018585
4 x 3	4.500	3.500	0.60	0.60	018584
4 x 2	4.500	2.375	0.60	0.60	018586
5 x 4	5.563	4.742	0.60	0.60	360777
6 x 5	6.625	5.563	0.60	0.60	360778
6 x 4	6.625	4.812	0.60	0.60	016476

[1] Dimensions shown are for a swedge reducer with a spigot end. A belled end may be substituted.

Plastic Conduit and Fittings (continued)

Table 10 High Density Polyethlene (HDPE) Conduit Directional Boring Conduit [1]

Conduit				Mechanical Couplings [2, 3]	
Size	Length (feet)	Description	Code	Size (inches)	Code
2” Sch 80	500	Coil [4]	360511	2	360690
2” Sch 80	40	Stick	360017		
3” Sch 80	500	Coil [4]	360644	3	360691
3” Sch 80	40	Stick	360018		
4” Sch 80	625	Coil [4]	360687	4	360692
4” Sch 80	625	Coil [5]	360014		
4” Sch 80	40	Stick	360015		
5” SDR 13.5	450	Coil [4]	360688	5	360694
5” SDR 13.5	450	Coil [5]	360012		
5” SDR 13.5	40	Stick	360013		
6” SDR 13.5	450	Coil [4]	360689	6	360695
6” SDR 13.5	450	Coil [5]	360010		
6” SDR 13.5	40	Stick	360011		

1 Color shall be black with at least 3 red longitudinal strips.
2 May be used to connect PE conduit to PVC conduit (except in directional drilling apps.)
3 Mechanical couplings are not designed for directional drilling. Fusion joints are required.
4 No reel.
5 With reel.

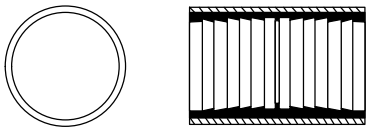

Figure 8
HDPE Coupling

Table 11 PVC (Bore-Gard) Directional Boring Conduit

Size (inches)	Description	Code
3	Conduit 10’, Schedule 40	360055
3	Conduit 20’, Schedule 40	360056
3	Replacement Locking Straps [1]	360058
3	Replacement Seal Gaskets [1]	360057
4	Conduit 10’, Schedule 40	360026
4	Conduit 20’, Schedule 40	360025
4	Replacement Locking Straps [1]	360031
4	Replacement Seal Gaskets [1]	360029
6	Conduit 10’, Schedule 40	360027
6	Conduit 20’, Schedule 40	360028
6	Replacement Locking Straps [1]	360032
6	Replacement Seal Gaskets [1]	360030

1 Package of 10.

Plastic Conduit and Fittings (continued)

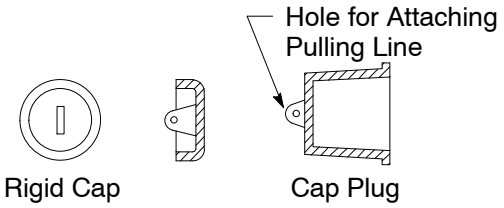

Figure 9
Plastic Conduit Caps

Table 12 Codes for Rigid Conduit Caps and Cap Plugs

Conduit Size (inches)	Codes	
	Rigid Cap	Cap Plug
2	360425	360440
3	360426	360441
4	360428	360443
5	360429	360444
6	360488	360494

Figure 10
End Bell

Table 13 Codes for End Bells

Conduit Size (inches)	Code
2	360420
3	360421
4	360423
5	360424
6	360487

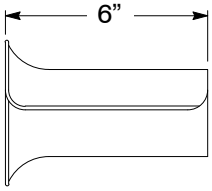

Figure 11
Cable Protector

Table 14 Codes for Cable Protectors [1]

Conduit Size (inches)	Code
2	382034
3	382032
4	
5	
6	

[1] Not for new installations; for replacement only.

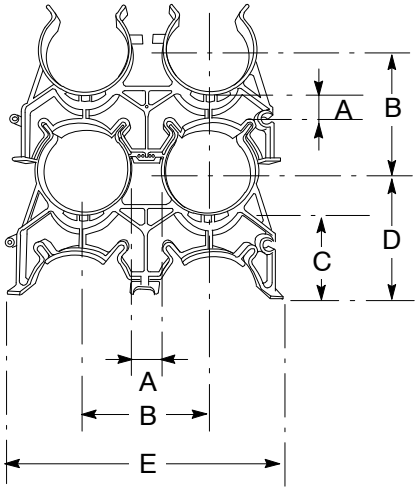

Figure 12
Snap-N-Stac Combo Spacers

Table 15 Codes for Snap-N-Stack Combo Spacers [1]

Conduit Size (inches)	Duct OD (inches)	Horizontal Duct Positions	Dimensions (inches)					Material Codes
			A	B	C	D	E	
3	3.5	2	2	5.5	3.63	5.38	11	360459
4	4.5	2	2	6.5	3.88	6.06	13	360460
5	5.5	2	2	7.56	4.38	7.25	15.12	360461
6	6.625	2	2	8.62	4.13	7.38	17.25	360491

[1] Cable spacers allow only for 2” separation between conduits. Cable spacers are used only where is required to route around existing obstructions. Thus, locations where cable spacers are needed are exempt from the requirement of maintaining 3” separation between 600 A distribution circuits.

Plastic Conduit and Fittings (continued)

Figure 13
5° Coupling

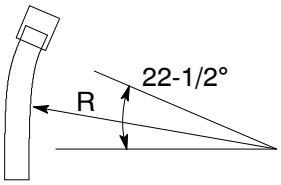

Figure 14
22-1/2° PVC Conduit Bend

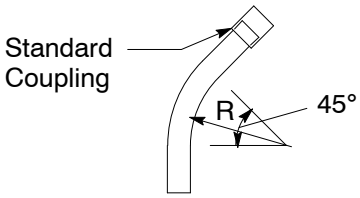

Figure 15
45° PVC Conduit Bend

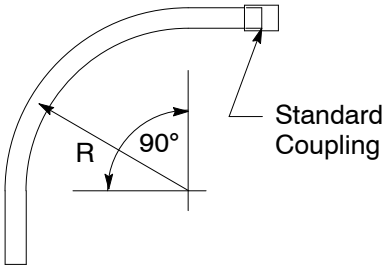

Figure 16
90° PVC Conduit Bend

Table 16 Codes for DB120 PVC Conduit Bends (sweeps)

Conduit Size (inches)	Sweep		Code
	Degree	Radius (inches)	
2	5	30	360458
	11-1/4	24	360797
		36	360798
	22-1/2	24	360795
		36	360796
	45	24	360391
		36	360794
	90	24	360393
		36	026491
3	5	36	360399
	11-1/4	36	360801
	22-1/2	36	360800
	45	36	360403
	90	24	360405
		36	360328
4	5	36	360400
	11-1/4	36	360804
		60	360805
	22-1/2	36	360760
		60	360761
	45	36	360412
		60	360413
	90	36	360414
		60	360415
5	5	48	360407
	11-1/4	36	360808
		60	360809
	22-1/2	36	360806
		60	360763
	45	36	360416
		60	360417
	90	36	360418
		60	360419
6	5	60	360495
	11-1/4	60	360811
	22-1/2	60	360765
	45	36	360485
		60	360486
	90	36	360483
		60	360484

Large Radius Sweeps

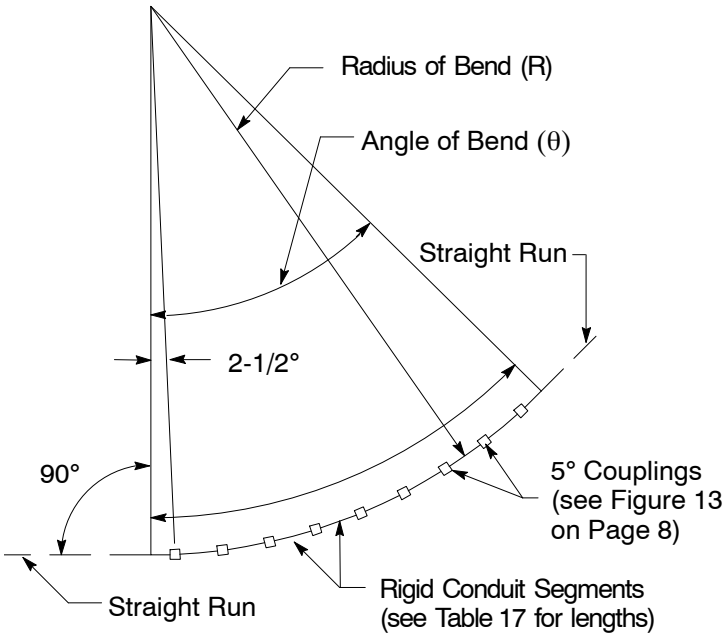

Figure 17
Typical Application of 5° Couplings

Table 17 Length of Rigid PVC Conduit Segments

Approximate Radius of Bend (R)	Length of Rigid Conduit Segments (feet)
11’ 6”	1
17’ 3”	1.5
23’ 0”	2
28’ 9”	2.5
34’ 6”	3
40’ 3”	3.5
46’ 0”	4
51’ 9”	4.5
57’ 6”	5
69’ 0”	6
80’ 6”	7
92’ 0”	8

Example

Radius Bend (R) = 60 Feet
Angle of Bend (θ) = 45°

From Table 17 The nearest value to 60-foot radius is 57’ 6”.
The length of conduit segments = 5 feet.

From Table 18 For a 45° angle bend:
The number of 5° couplings required = 9.
The number of conduit segments required = 8.

Table 18 Number of Couplings and Conduit Segments Required

Angle of Bend (θ)	Number of Couplings and Outside Diameter Conduit Segments Required	
	Coupling	Conduit
15°	3	2
30°	6	5
45°	9	8
60°	12	11
75°	15	14
90°	18	17

Flexible (HDPE) Conduit and Fittings

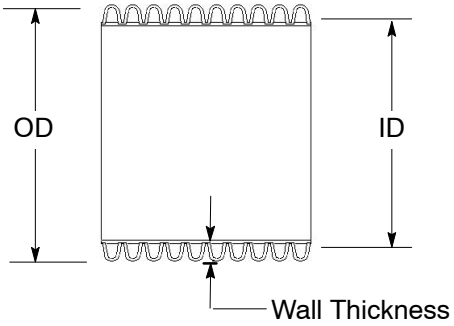

Figure 18
Smooth-Core Conduit

Table 19 Data and Codes for Smooth-Core Conduit w/Couplers (20' length) [1, 2]

Conduit Size (inches)	Dimension (inches)			Minimum Bending Radius (feet)	Code
	Outside Diameter	Inside Diameter	Wall Thickness		
3	3.5	2.975	.263	6	360094
4	4.965	4.124	.420	8	360335
6	6.890	5.860	.515	12	360128

1 Conduit can be used in areas with minor soil settlement issues or for large radius sweeps.
2 Inside wall is smooth.

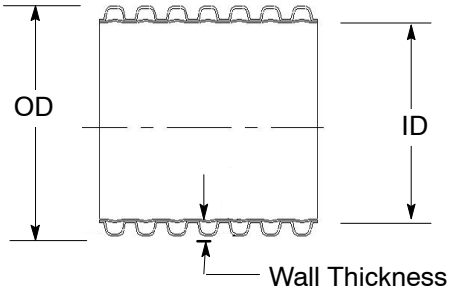

Figure 19
Corrugated Core Flex Conduit

Table 20 Data and Codes for Corrugated Core Flex Conduit With Couplers (250' coil) [1 2 3]

Conduit Size (inches)	Dimension (inches)			Code
	Outside Diameter	Inside Diameter	Wall Thickness	
2	2.375	2.050	.163	360095
3	3.500	2.950	.275	360096
4	4.750	3.975	.387	360097

1 Conduit can be used in areas minor soil settlement issues or for re-routes.
2 Inside wall is corrugated.
3 Minimum bending radius is 24 inches for all sizes.

Flexible (HDPE) Conduit and Fittings (continued)

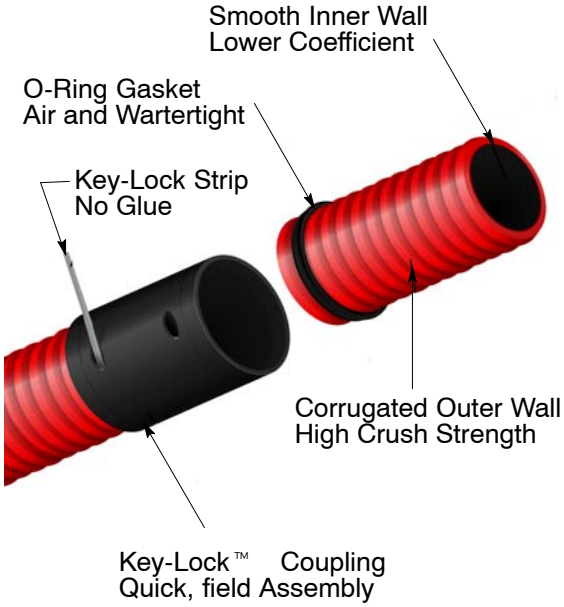

Table 21 Data and Codes for Key-Lock™ Couplers [1]

Conduit Size (inches)	Insertion Lengths (inches)	Code
2	2.725	360102
3	3.125	360103
4 [2]	2.875	360129
4 [3]	3.00	360104
4 [4]	2.875	360105
4	4.205	360130

1 Kit has coupler, two locks and two gaskets.
2 Coupler to connect smooth-core to smooth-core conduit.
3 Coupler to connect smooth-core to corrugated core flex conduit.
4 Coupler to connect corrugated core flex to corrugated core flex.

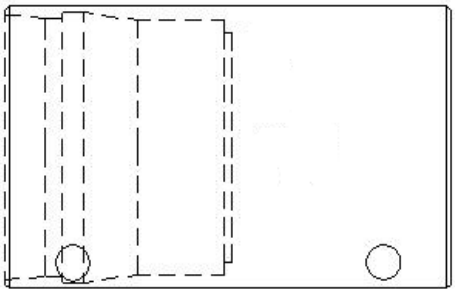

Figure 20
Key-Lock™ Couplers

Flexible (HDPE) Conduit and Fittings (continued)

Install the Key-Lock Coupler Following the Procedure Below

1. Make certain the elastomeric gasket is seated in the second corrugation on 4” conduit and the first corrugation on 6” conduit. Be sure the gasket is positioned as shown on Figure 21.

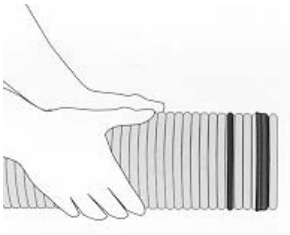

Figure 21
Key-Lock™ Couplers Gasket Position

2. Use only a water-based lubricant. Apply the lubricant to the outside surface of the gasket. A light coating of lubricant should also be applied to the chamfered leading edge of the coupler as shown on Figure 22.

Figure 22
Key-Lock™ Couplers Lubricant Application

3. Insert the gasketed end of the Smooth-Cor® conduit into the coupler. Note the black home-mark, which is used to identify proper coupling as shown on Figure 23.

Figure 23
Key-Lock™ Couplers Insertion

Flexible (HDPE) Conduit and Fittings (continued)

Install the Key-Lock Coupler Following the Procedure Below (continued)

4. Use a mallet and wood block to seat the coupler until the home-mark is covered. Note that the small lock ring on the inside surface of the coupler snaps into a matching corrugation as shown on Figure 24.

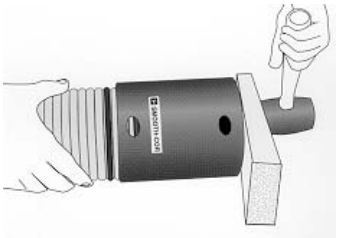

Figure 24
Key-Lock™ Couplers Locked in Place

5. Insert the Key-Lock™ strip following the directional arrow into the pre-drilled hole in the coupler. Apply a small amount of lubricant to aid in the insertion. Push the Key-Lock™ strip (in the direction of the arrow on the label) around the entire circumference, locking the grooves in the conduit and coupler securely together. Trim the excess Key-Lock™ strip material from the coupler (optional). See Figure 25 below.

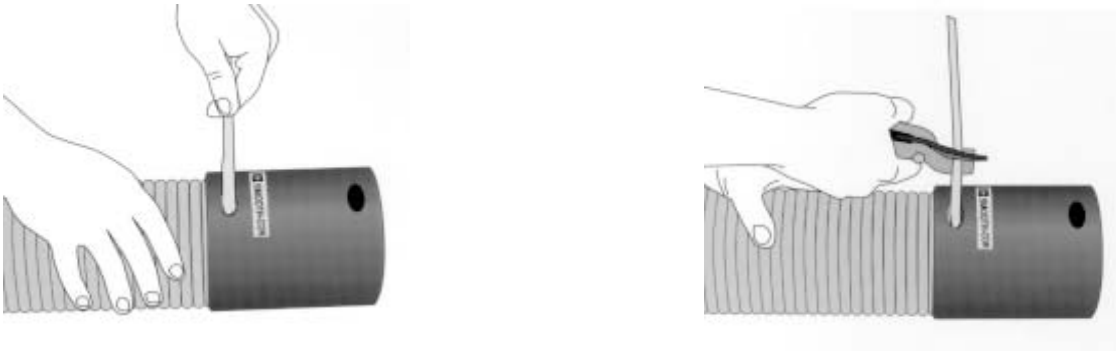

Figure 25
Key-Lock™ Couplers Strip Insertion

Flexible (HDPE) Conduit and Fittings (continued)

Install the Key-Lock Coupler Following the Procedure Below (continued)

Note: When cutting the Smooth-Cor® conduit in the field to a custom length, it necessary to follow the steps below:

1. Cut the conduit at the selected corrugation valley.
2. Place the gasket over the newly cut and cleaned end, making certain to seat the gasket on the second corrugation for 4” conduit and on the 6” conduit. The higher ridge of the elastomeric seal is positioned toward the body of the conduit and the lower ridge toward the end of the conduit. Using a felt marker, place a home-mark on the conduit to achieve proper coupling. When using 4” conduit, place the home-mark on the seventh corrugation; for the 6” conduit, place the home-mark on the fourth corrugation. Repeat steps 2-5 as shown on Page 12 and 13 to complete coupling. See Figure 26.

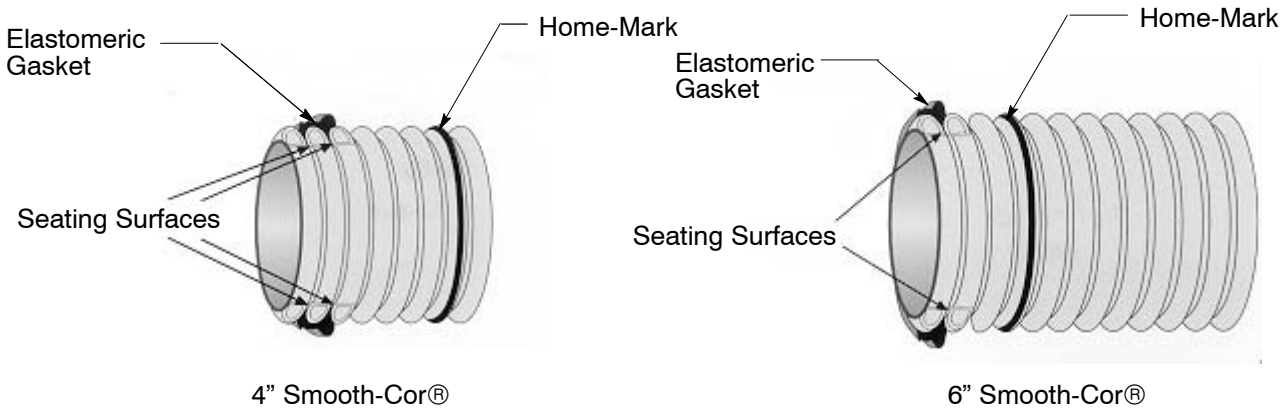

Figure 26
Key-Lock™ Couplers Cut at Customized Length

Flexible (HDPE) Conduit and Fittings (continued)

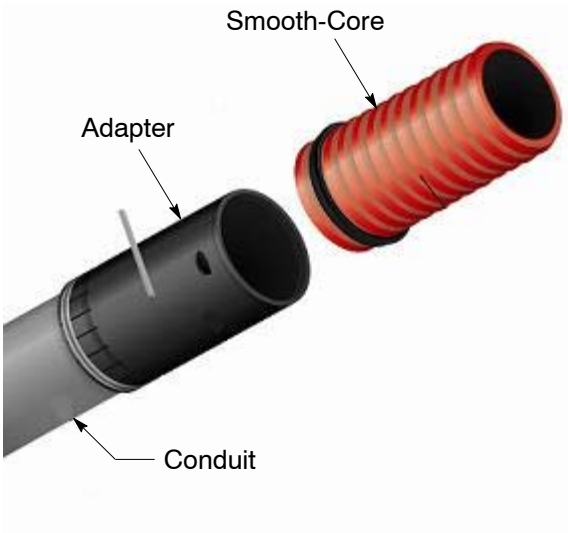

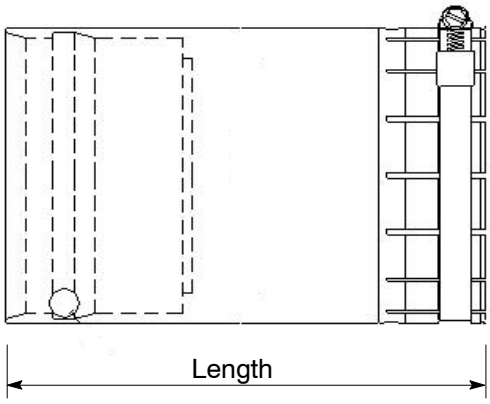

Figure 27
Key-Lock™ Adapter

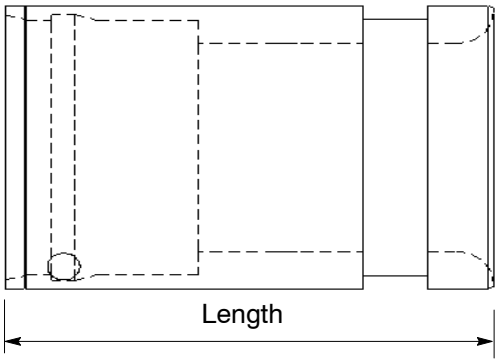

Figure 28
Key-Lock™ Bell End Adapter

Table 22 Data and Codes for Key-Lock™ Adapter Smooth-Core-Shur-Lock Kit™ [1]

Conduit Size (inches)	Dimension (inches)	Code
	Length	
2	6.7	360106
3	6.63	360107
4 [2]	8.0	360131
4 [3]	8.0	360108
6	11.63	360132

1 Kit has adapter, two locks, and two gaskets.
2 Adapter to connect smooth-core to smooth-core conduit.
3 Adapter to connect corrugated core flex to corrugated core flex conduit.

Table 23 Required Rigid PVC stub out length

Conduit Size (inches)	PVC Stub Out (inches)
2	14.8
3	14.5
4	15
6	17.5

1 Stub out length needed to provide enough space for the adapter to connect rigid PVC to flexible conduit.

Table 24 Data and Codes for Key-Lock™ Bell End Adapters Smooth-Core Bell

Conduit Size (inches)	Dimension (inches)	Code
	Length	
2	7.38	360109
3	7.25	360110
4 [1]	7.5	360133
4 [2]	7.5	360111
6	8.75	360134

1 Adapter to connect to smooth-core to smooth-core conduit.
2 Adapter to connect corrugated core flex to corrugated core flex conduit.

Flexible (HDPE) Conduit and Fittings (continued)

Figure 29
Tapered Plugs

Table 25 Codes for Tapered Plugs

Tapered Plug (inches)	Code
2	360112
3	360113
4	360114
6	360115

Table 26 Codes for Key-Lock™ Strip Replacement [1]

Key-Lock Strip (inches)	Color	Length (inches)	Bell Diameter (inches)	Code
2	Lime	12	2.75	360121
3	Lavender	16.5	4.37	360122
4	Gray	19.5	4.82	360123
6	Blue	28.5	7.0	360124

[1] See Figure 21 for Key-Lock™ picture.

Table 27 Codes for O-Ring Gasket Seals [1]

Tapered Plug (inches)	Code
2	360125
3	360126
4	360135
6	360136

[1] See Figure 21 for O-Ring Gasket Picture.

Figure 30
Pre-Formed Sweeps

Table 28 Pre-Formed Sweeps Smooth Wall HDPE

Conduit Size (inches)	Degree	Radius (inches)	Code
2	90	36	360116
3	90	36	360117
4	90	36	360118
4	90	48	360119
6	90	60	360120

Trench Requirements

Notes

1. Field conditions may require a minimum depth greater than shown.
2. Maintain 3-inch separation between ducts for primary and secondary distribution circuits.
3. Sharp turns, bends, or other irregularities in the conduit must be avoided.
4. If the bottom of a trench which will contain plastic conduit is rocky, use backfill material conforming to the requirements of Engineering Material Specification 4123. Before tamping in the area of plastic conduit, apply at least 6 inches of backfill over the top of the conduit to avoid breakage. Final backfill may then be placed in the trench and tamping employed to finish grade. In order to reduce costs, the soil originally removed from the trench should be used as backfill wherever possible (see Note 13 on Page 2).
5. Do not use salt-water sand backfill with steel conduit.
6. Other utility practices may require a greater minimum conduit separation.
7. Refer to state of California, Department of Industrial Relations; *Trench Construction Safety Orders* for trench construction requirements. These orders are issued by the Department of Occupational Safety and Health.
8. When crossing obstructions, such as shown in Figure 34 and Figure 35 on Page 18, maintain 6-inch minimum separation.

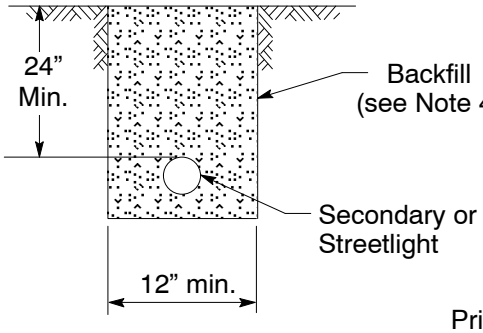

Figure 31
Secondary/Service or Streetlight Trench

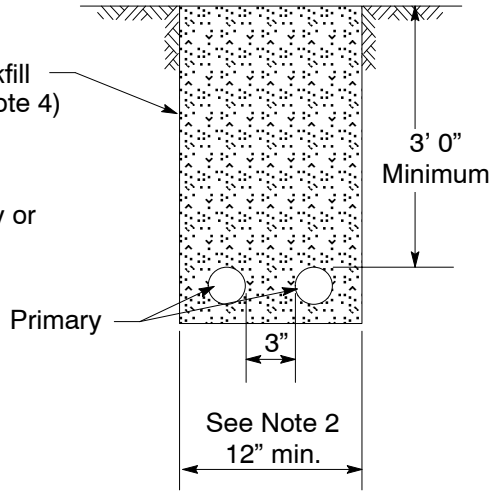

Figure 32
Primary Trench

Conduit Construction, Built-up Method

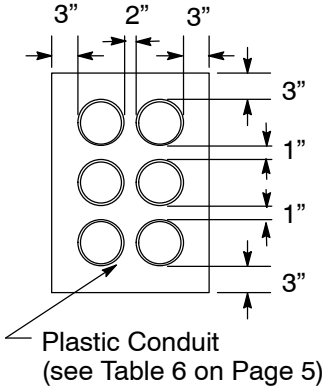

Section A-A

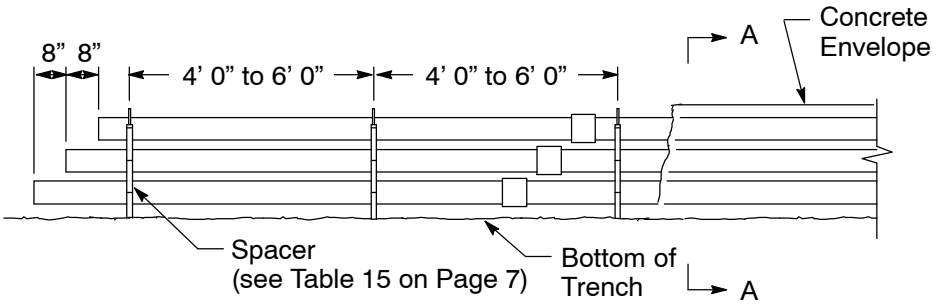

Figure 33
Typical Straight Run Installation
(5” conduit, 6-way shown)

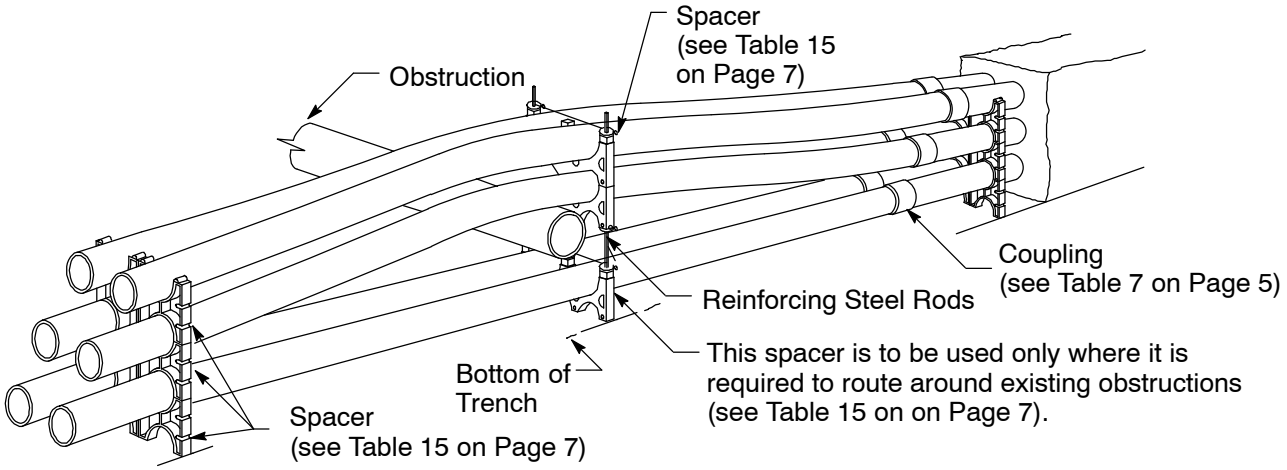

Figure 34
Typical Perspective View of
Installation Around Obstruction

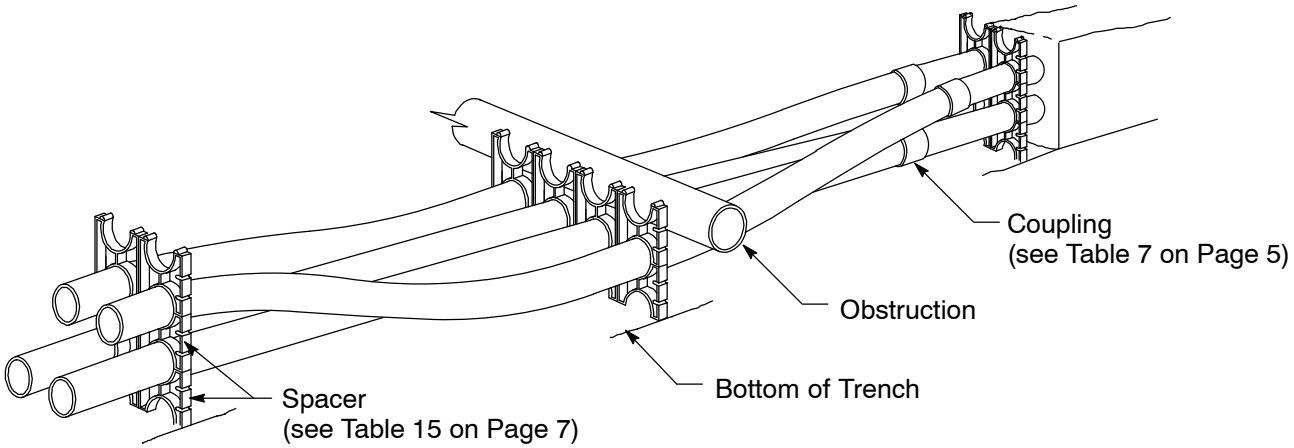

Figure 35
Typical Perspective View of
Installation Under Obstruction

Construction and Termination of Conduit Line

Notes

1. Slope the conduit sufficiently to provide adequate drainage. On level ground, slope the duct line from the center to each manhole.
2. Local city ordinances may require a minimum cover greater than PG&E's requirements of 24" for conduits containing circuits energized at 750 volts or less, and 36" for conduits containing circuits energized in excess of 750 volts. Depth may be reduced in either case if adequate mechanical protection – as defined in Section 3.3.6 of the Greenbook – is provided.
3. Where required, the depth of the conduit window may be increased. Where this is necessary, tie the conduit envelope concrete into the manhole reinforcing steel.
4. Vertical staggering of conduits at entrance shown in Detail A will assist in arranging for cable crossover if required.

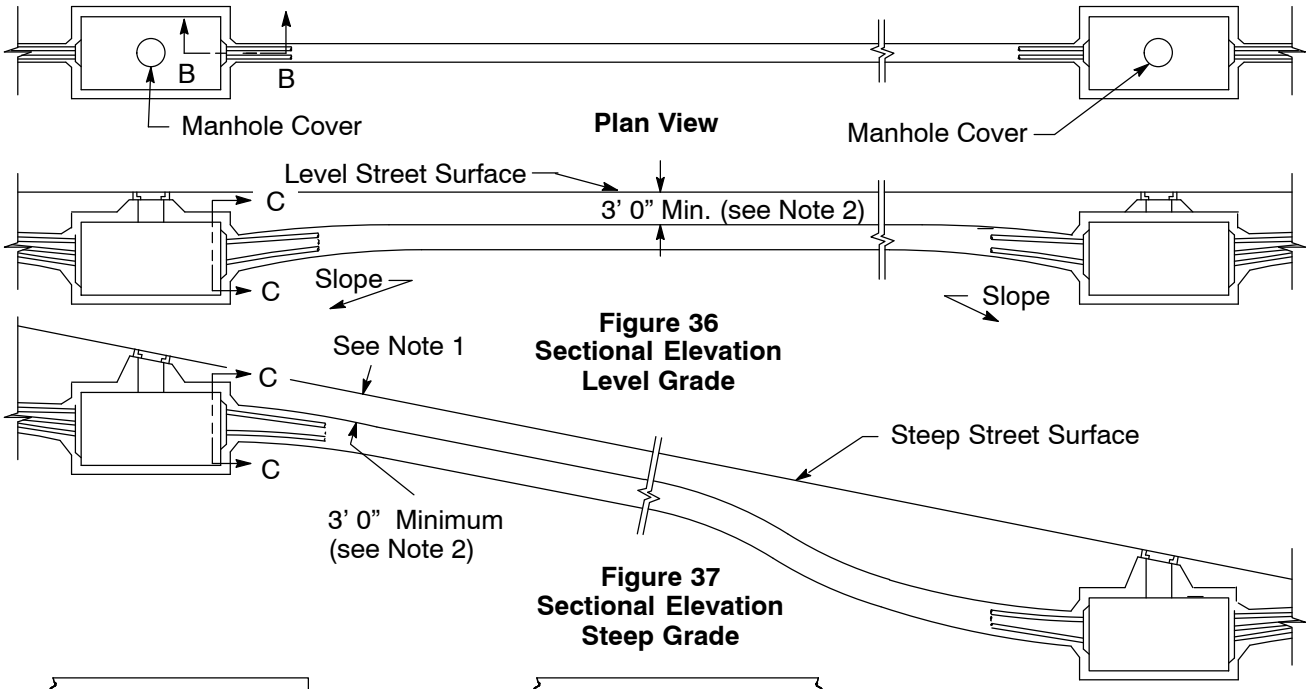

Figure 36
Sectional Elevation
Level Grade

Figure 37
Sectional Elevation
Steep Grade

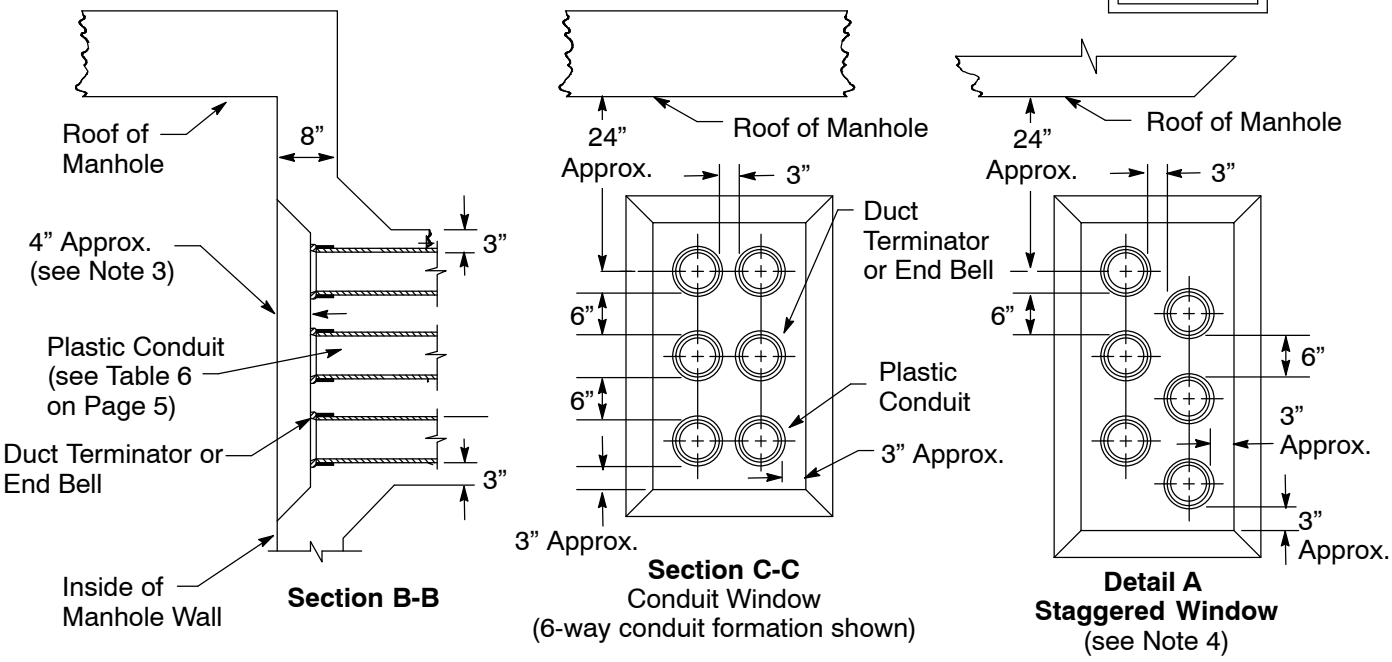

Conduit Configuration Tables

Notes

1. For conduit lines four-way and larger in fill areas or areas of known differential ground settlement, install #4 reinforcing bars in all four corners of the conduit envelope. Overlap bars 15 inches and install a minimum of 3 inches from the top or bottom and 1 inch from the side of the envelope.
2. Where the width of the trench is greater than the required width of the envelope, the horizontal spacing between conduits may be increased as long as 3-inch spacing between the conduit and the outside edge of the envelope is maintained.

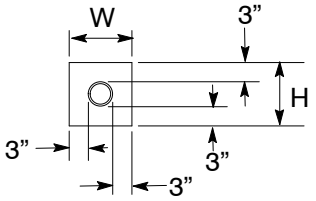

Figure 38
Single Conduit Configuration

Table 29 Dimensions for Single Conduit Configurations

Conduit		Envelope Dim.		Concrete Reqd. Cubic Yards per 100 ft. [1]
Description	Size	W	H	
Single	2”	8-1/2”	8-1/2”	1.9
	3”	9-1/2”	9-1/2”	2.3
	4”	10-1/2”	10-1/2”	2.8
	5”	11-1/2”	11-1/2”	3.1
	6”	12-1/2”	12-1/2”	3.4

[1] Quantities are approximate and include 10% added for variations encountered in construction.

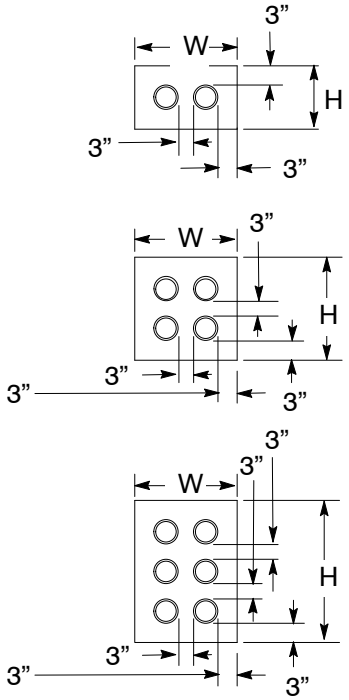

Figure 39
Two, Four, and Six-Way Conduit Configuration

Table 30 Dimensions for Multiple Conduit Configurations

Conduit		Envelope Dim.		Concrete Reqd. Cubic Yards per 100 ft. [1]
Description	Size	W	H	
2-way	3”	14-1/2”	9-1/2”	3.4
	4”	17”	10-1/2”	4.0
	5”	19”	11-1/2”	5.2
	6”	23-1/2”	12-1/2”	6.4
4-way	4”	17”	17”	6.2
	5”	19”	19”	8.2
	6”	23-1/2”	23-1/2”	11.7
6-way	4”	16-1/2”	24”	7.8
	5”	19”	27”	11.0
	6”	23-1/2”	30”	12.7
8-way	4”	17”	31”	9.7
	5”	19”	35”	13.8
	6”	23-1/2”	39”	15.1

[1] Quantities are approximate and include 10% added for variations encountered in construction.

Instructions for Sealing Conduit

Notes

1. Within minutes, polyurethane foam expands to form a water and gas barrier that can be easily removed in the future.
2. Consult the manufacturer's instructions included in each kit.

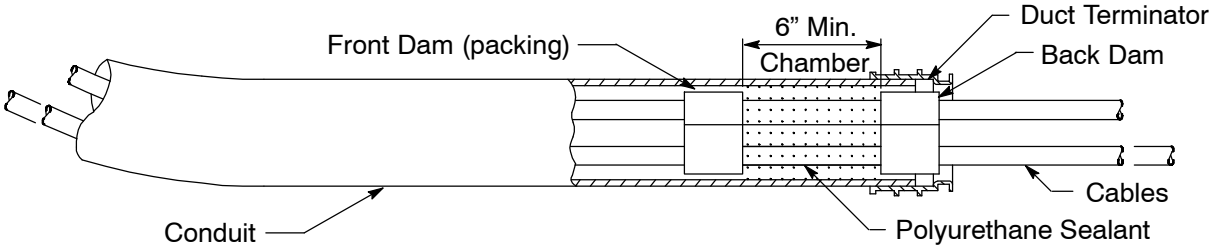

Figure 40
Details of a Polyurethane Seal

Step 1 Wipe off loose dirt and grime from cables.

Step 2 Install front dam (packing). Wind a strip of packing around each cable. Push the dam approximately 6 inches to 8 inches into the conduit. Install the back dam in the same manner as the front dam, and push it into the conduit until the dam is flush with the duct terminator.

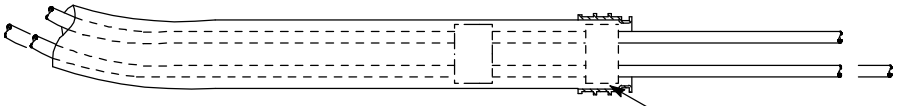

Figure 41

Step 3 Insert the nozzle into the chamber between the dams and inject polyurethane.

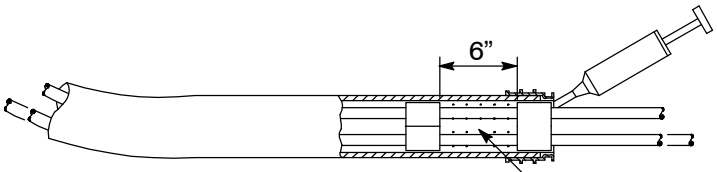

Figure 42

Table 31 Codes for Polyurethane Conduit Seal Kits

Conduit Size	Code	Manufacturer	Catalog Number
2" Through 6"	019178	Dura-Line (Arnco) Hydro Seal	S-60-C6P
	490813	Polywater	FST-250KIT-PGE

Instructions for Sealing Conduit (continued)

Termination Enclosure Riser Seal Method

Step 1 Place the residential riser seal on the cable and slowly push it into the mouth of the riser conduit. Turn the Allen screw until the neoprene gasket expands to form a tight seal.

Step 2 This riser seal is to be used to seal the riser conduit at the customer's service termination enclosure only. The top of the service riser is the preferred location. Belowground use is approved if an alternative to foam is needed.

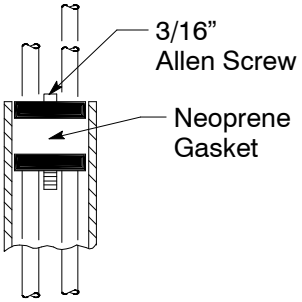

Figure 43
Termination Enclosure Riser Seal

Table 32 Codes for Termination Enclosure Riser Seals

Conduit Size	Cable Size	Code	Manufacturer and Catalog No. Environmental Solutions Cat.
2"	1/0 Triplex	019179	ESC – 103
	4/0 Triplex	019180	ESC – 403

Revision Notes

Revision 14 has the following changes:

1. Revised Note 19 on Page 2.
2. Revised Note 2 on Page17.
3. Revised table Footnote 1 for Table 19 and Table 20 on Page 10.
4. Added Table 23 on Page 15.
5. Revised Table 31 on Page 21.

Potential Water Sources

It is the responsibility of the contractor to acquire an adequate and reliable source of water for construction activities for this project. Potential sources of water near the project location are included in, but not limited to, the following list.

Non-Potable:
Indian Valley Community Services District
(530) 284-7224