Dist	COUNTY	ROUTE	POST MILES TOTAL PROJECT	SHEET No.	TOTAL SHEETS
02	Las, Sie,Las	70, 395	3.5/3.9 R0.0/R3.1,R0.0/R5.6	101	236

REGISTERED CIVIL ENGINEER 06-10-16 DATE

06-15-16
PLANS APPROVAL DATE

REGISTERED PROFESSIONAL ENGINEER FRANK RIVAS No. C53592 Exp. 6/30/17 CIVIL STATE OF CALIFORNIA

THE STATE OF CALIFORNIA OR ITS OFFICERS OR AGENTS SHALL NOT BE RESPONSIBLE FOR THE ACCURACY OR COMPLETENESS OF SCANNED COPIES OF THIS PLAN SHEET.

NOTE:

1. (N) - NOT A SEPARATE PAY ITEM, FOR INFORMATION ONLY

ROADSIDE SIGNS

SHEET No.	SIGN No.	SIGN CODE	PANEL SIZE	SIGN MESSAGE	"H" DIM	(N) POST SIZE AND LENGTH						ROADSIDE SIGN		INSTALL ROADSIDE SIGN (LAMINATED WOOD BOX POST)	INSTALL SIGN (SSBM)	REMOVE ROADSIDE SIGN	TREATED WOOD WASTE	REMARKS
						METAL	WOOD			LAMINATED WOOD BOX POST		ONE POST	TWO POST					
			in x in		ft	2½" x 2½"	4" x 6"	6" x 6"	6" x 8"	TYPE M	TYPE L	EA	EA	EA	EA	EA	LB	
PD-31	31-3	G92 (CA)	48 x 30	FREEWAY ENTRANCE												1	65	
		G26-2 (CA)	25 x 28	US 395														
		M3-3	24 x 12	SOUTH														
		M6-2	21 x 15	RIGHT ARROW														
	31-4	G92 (CA)	48 x 30	FREEWAY ENTRANCE														
		G26-2 (CA)	25 x 28	US 395														
		M3-3	24 x 12	SOUTH														
		M6-2	21 x 15	RIGHT ARROW	2		15.7					1						"H" TO THE BOTTOM OF SIGN M6-2
PD-32	32-1	W4-1R	36 x 36	MERGE												1	65	
	32-2	W4-1R	48 x 48	MERGE	7			18.7				1						
	32-3	W13-2	36 x 48	EXIT 25 MPH												1	65	
	32-4	W13-2	48 x 60	EXIT 25 MPH	7										1			STRAP TO LIGHT POLE
	32-5	G84-2 (CA)	54 x 48	EXIT 8 RIGHT												1	65	
	32-6	E5-1A	78 x 60	EXIT 8 RIGHT	7			17.5,18.0					1					
	32-7	G70-2	36 x 12	EXIT 8												1	65	
		G85-3 (CA)	120 x 138	JCT 70, PORTOLA, QUINCY														
		D9-11	24 x 24	DIESEL FUEL														
		G81-52 (CA)	24 x 6	LP GAS														
		G33-1 (CA)	24 x 6	LEFT ARROW														
	32-8	G85-3 (CA)	108 x 138	JCT 70, PORTOLA, QUINCY	7						27.5,28.0			1				
	32-9	W4-2	48 x 48	LANE DROP												1	65	
	32-10	W9-1	48 x 48	RIGHT LANE ENDS	7		17.7					1						
	32-11	W9-2L	48 x 48	LANE ENDS MERGE LEFT												1	65	
	32-12	W9-1	48 x 48	RIGHT LANE ENDS	7		17.7					1						
	32-13	G47 (CA)	24 x 12	NORTH												1	65	
		G26-2 (CA)	21 x 18	US 395														
	32-14	G47 (CA)	24 x 12	NORTH	7										1			
		G26-2 (CA)	21 x 18	US 395														
											TOTAL THIS SHEET	4	1	1	2	8	520	

FRANK RIVAS — REVISED BY — DATE REVISED
DAN FISHER — CALCULATED-DESIGNED BY — CHECKED BY
ROB STINGER — FUNCTIONAL SUPERVISOR

STATE OF CALIFORNIA - DEPARTMENT OF TRANSPORTATION
Caltrans® TRAFFIC OPS.

P:\proj1\02\4E420_plans\pse\24e420od009.dgn

SIGN QUANTITIES

SQ-9

LAST REVISION 02-25-16 | DATE PLOTTED => 28-JUL-2016 TIME PLOTTED => 13:51

Dist	COUNTY	ROUTE	POST MILES TOTAL PROJECT	SHEET No.	TOTAL SHEETS
02	Las, Sie,Las	70, 395	3.5/3.9 R0.0/R3.1,R0.0/R5.6	102	236

Frank J. Rivas 06-10-16
REGISTERED CIVIL ENGINEER DATE

06-15-16
PLANS APPROVAL DATE

REGISTERED PROFESSIONAL ENGINEER FRANK RIVAS No. C53592 Exp. 6/30/17 CIVIL STATE OF CALIFORNIA

THE STATE OF CALIFORNIA OR ITS OFFICERS OR AGENTS SHALL NOT BE RESPONSIBLE FOR THE ACCURACY OR COMPLETENESS OF SCANNED COPIES OF THIS PLAN SHEET.

NOTE:

1. (N) - NOT A SEPARATE PAY ITEM, FOR INFORMATION ONLY

ROADSIDE SIGNS

SHEET No.	SIGN No.	SIGN CODE	PANEL SIZE	SIGN MESSAGE	"H" DIM	(N) POST SIZE AND LENGTH						ROADSIDE SIGN		INSTALL ROADSIDE SIGN (LAMINATED WOOD BOX POST)	INSTALL SIGN (SSBM)	REMOVE ROADSIDE SIGN	TREATED WOOD WASTE	REMARKS
						METAL	WOOD			LAMINATED WOOD BOX POST		ONE POST	TWO POST					
			in x in		ft	2½" x 2½"	4" x 6"	6" x 6"	6" x 8"	TYPE M	TYPE L	EA	EA	EA	EA	EA	LB	
PD-33	33-1	W4-2	36 x 36	RIGHT LANE ENDS SYMBOL												1	65	
	33-2	W4-2	48 x 48	RIGHT LANE ENDS SYMBOL	7		18.2					1						
	33-3	S30-5 (CA)	84 x 42	CHECK HEADLIGHTS												1	65	
	33-4	S30-5 (CA)	84 x 42	CHECK HEADLIGHTS	7		15.5,15.0						1					
	33-5	W4-2	36 x 36	RIGHT LANE ENDS SYMBOL												1	65	
	33-6	W4-2	48 x 48	RIGHT LANE ENDS SYMBOL	7		16.7					1						
	33-7	S30-5	84 x 42	CHECK HEADLIGHTS												1	65	
	33-8	S30-5	84 x 42	CHECK HEADLIGHTS	7		16.0,15.5						1					
	33-9	R4-1	24 x 30	DO NOT PASS												1	65	
	33-10	R4-1	36 x 48	DO NOT PASS	7	12.7						1						
	33-11	R4-1	24 x 30	DO NOT PASS												1	65	
	33-12	R4-1	36 x 48	DO NOT PASS	7	11.7						1						
	33-13	S30-1 (CA)	84 x 54	DAYLIGHT HEADLIGHT SECTION												1	65	
	33-14	S30-1 (CA)	84 x 54	DAYLIGHT HEADLIGHT SECTION	7			18.5,18.0					1					
	33-15	S30-1 (CA)	84 x 54	DAYLIGHT HEADLIGHT SECTION												1	65	
	33-16	S30-1 (CA)	84 x 54	DAYLIGHT HEADLIGHT SECTION	7			15.0,14.5					1					
	33-17	S30-2 (CA)	108 x 54	TURN ON HEADLIGHTS NEXT 36 MILES												1	65	
	33-18	S30-2 (CA)	108 x 54	TURN ON HEADLIGHTS NEXT 36 MILES	7			17.0,17.0					1					
	33-19	S30-2 (CA)	108 x 54	TURN ON HEADLIGHTS NEXT 36 MILES												1	65	
	33-20	S30-2 (CA)	108 x 54	TURN ON HEADLIGHTS NEXT 36 MILES	7			16.5,16.0					1					
	33-21	S30-3 (CA)	84 x 66	END DAYLIGHT HEADLIGHT SECTION												1	65	
	33-22	S30-3 (CA)	84 x 66	END DAYLIGHT HEADLIGHT SECTION	7				19.0,19.5				1					
PD-34	34-1	W6-3	36 x 36	TWO WAY TRAFFIC SYMBOL												1	65	
	34-2	W6-3	36 x 36	TWO WAY TRAFFIC SYMBOL	7	12.0						1						
	34-3	W6-1	36 x 36	DIVIDED TRAFFIC AHEAD SYMBOL												1	65	
	34-4	W6-1	36 x 36	DIVIDED TRAFFIC AHEAD SYMBOL	7	13.0						1						
	34-5	R2-1	36 x 48	SPEED LIMIT 65												1	65	
		R48 (CA)	24 x 30	SPEED ENFORCED BY RADAR														
	34-6	R2-1	48 x 60	SPEED LIMIT 65	5			17.5				1						"H" TO BOTTOM OF R48 (CA)
		R48 (CA)	48 x 24	SPEED ENFORCED BY RADAR														
PD-35	35-1	R4-1	24 x 30	DO NOT PASS												1	65	
	35-2	R4-1	24 x 30	DO NOT PASS	7	11.2						1						
											TOTAL THIS SHEET	8	7			15	975	

SIGN QUANTITIES

SQ-10

FRANK RIVAS | REVISED BY | DATE REVISED
DAN FISHER | CALCULATED-DESIGNED BY | CHECKED BY
ROB STINGER | FUNCTIONAL SUPERVISOR
STATE OF CALIFORNIA - DEPARTMENT OF TRANSPORTATION
Caltrans® TRAFFIC OPS.

P:\proj1\02\4E420_plans\pse\24e420od010.dgn

LAST REVISION 02-25-16 | DATE PLOTTED => 28-JUL-2016 TIME PLOTTED => 13:51

Dist	COUNTY	ROUTE	POST MILES TOTAL PROJECT	SHEET No.	TOTAL SHEETS
02	Las, Sie,Las	70, 395	3.5/3.9 R0.0/R3.1,R0.0/R5.6	103	236

Frank J. Rivas 06-10-16
REGISTERED CIVIL ENGINEER DATE

06-15-16
PLANS APPROVAL DATE

REGISTERED PROFESSIONAL ENGINEER FRANK RIVAS No. C53592 Exp. 6/30/17 CIVIL STATE OF CALIFORNIA

THE STATE OF CALIFORNIA OR ITS OFFICERS OR AGENTS SHALL NOT BE RESPONSIBLE FOR THE ACCURACY OR COMPLETENESS OF SCANNED COPIES OF THIS PLAN SHEET.

NOTE:

1. (N) - NOT A SEPARATE PAY ITEM, FOR INFORMATION ONLY

ROADSIDE SIGNS

SHEET No.	SIGN No.	SIGN CODE	PANEL SIZE	SIGN MESSAGE	"H" DIM	(N) POST SIZE AND LENGTH						ROADSIDE SIGN		INSTALL ROADSIDE SIGN (LAMINATED WOOD BOX POST)	INSTALL SIGN (SSBM)	REMOVE ROADSIDE SIGN	TREATED WOOD WASTE	REMARKS
						METAL	WOOD			LAMINATED WOOD BOX POST		ONE POST	TWO POST					
			in x in		ft	2½" x 2½"	4" x 6"	6" x 6"	6" x 8"	TYPE M	TYPE L	EA	EA	EA	EA	EA	LB	
PD-35	35-3	R6-3 (CA)	36 x 48	TRUCKS 3 AXELS OR MORE 55												1	65	
	35-4	R6-3 (CA)	48 x 60	TRUCKS 3 AXELS OR MORE 55	7			16.5				1						
	35-5	SW17-1 (CA)	132 x 48	GUSTY WIND AREA NEXT 56 MILES												1	65	
	35-6	SW17-1 (CA)	132 x 48	GUSTY WIND AREA NEXT 56 MILES	7			13.0,12.5					1					
PD-36	36-1	R6-4 (CA)	36 x 48	ALL VEHICLES WHEN TOWING 55												1	65	
	36-2	R6-4 (CA)	48 x 60	ALL VEHICLES WHEN TOWING 55	7		17.5					1						
	36-3	G70-2 (CA)	96 X 24	EXIT 8												1	65	
		G83 (CA)	144 x 138	JCT 70, PORTOLA, QUINCY														
		D9-1	24 x 24	PHONE SYMBOL														
		G30 (CA)		SCENIC BYWAY														SAVE PANEL FOR REUSE ON SIGN No. 36-4
		G66-56	24 x 24	TERMINAL ROUTE														
	36-4	G83 (CA)	108 x 138	JCT 70, PORTOLA, QUINCY	5						26.0,26.0							"H" TO BOTTOM OF SIGN D9-1
		D9-1	24 x 24	PHONE SYMBOL														
		G30 (CA)		SCENIC BYWAY														REUSE SAVED PANEL FROM SIGN No. 36-3
		G66-56	24 x 24	TERMINAL ROUTE														
PD-37	37-1	G84-2 (CA)	54 x 48	EXIT RIGHT												1	65	
	37-2	G92 (CA)	48 x 30	FREEWAY ENTRANCE	2		14.1					1						
		G26-2 (CA)	25 x 28	US 395														
		M3-3	24 x 12	SOUTH														
		M6-2	21 x 15	RIGHT ARROW														
	37-3	G92 (CA)	48 x 30	FREEWAY ENTRANCE	2		14.6											
		G26-2 (CA)	25 x 28	US 395														
		M3-3	24 x 12	SOUTH														
		M6-2	21 x 15	LEFT ARROW														
	37-4	R20H (CA)	36 x 48	TRUCK LENGTH LIMIT												1	65	
		SPL-6	36 x 30	65 MILES AHEAD														
	37-5	R20H (CA)	36 x 48	TRUCK LENGTH LIMIT	4			16.0				1						"H" TO BOTTOM OF SIGN W34A (CA)
		SPL-6	36 x 30	65 MILES AHEAD														
	37-6	G77A (CA)	132 x 84	RENO, 395, SUSANVILLE												1	65	
	37-7	G77A (CA)	120 x 120	RENO, SOUTH, 395, NORTH, SUSANVILLE	5					22.0,22.0				1				
											TOTAL THIS SHEET	4	1	1		7	455	
											GRAND TOTAL	74	24	10	6	110	7150*	

* INCLUDED IN SUMMARY OF QUANTITIES SHT Q-1

SIGN QUANTITIES

SQ-11

REVISED BY | DATE REVISED
FRANK RIVAS | DAN FISHER
CALCULATED-DESIGNED BY | CHECKED BY
FUNCTIONAL SUPERVISOR: ROB STINGER

STATE OF CALIFORNIA - DEPARTMENT OF TRANSPORTATION
Caltrans® TRAFFIC OPS.

P:\proj1\02\4E420_plans\pse\24e420od011.dgn

LAST REVISION 02-25-16 | DATE PLOTTED => 28-JUL-2016 | TIME PLOTTED => 13:51

Dist	COUNTY	ROUTE	POST MILES TOTAL PROJECT	SHEET No.	TOTAL SHEETS
02	Las, Sie,Las	70, 395	3.5/3.9 R0.0/R3.1,R0.0/R5.6	104	236

Frank J. Rivas 06-10-16
REGISTERED CIVIL ENGINEER DATE

06-15-16
PLANS APPROVAL DATE

REGISTERED PROFESSIONAL ENGINEER FRANK RIVAS No. C53592 Exp. 6/30/17 CIVIL STATE OF CALIFORNIA

THE STATE OF CALIFORNIA OR ITS OFFICERS OR AGENTS SHALL NOT BE RESPONSIBLE FOR THE ACCURACY OR COMPLETENESS OF SCANNED COPIES OF THIS PLAN SHEET.

ROADSIDE SIGN PANEL QUANTITIES

SHEET No.	SIGN No.	SIGN CODE	SIGN MESSAGE/DESCRIPTION	PANEL SIZE L x D INCHES	SINGLE FACED	SIGN FACING MATERIAL: BACKGROUND SHEETING COLOR	BACKGROUND RETROREFLECTIVE ASTM TYPE	LEGEND SHEETING COLOR	LEGEND RETROREFLECTIVE ASTM TYPE	PROTECTIVE FILM (PREMIUM)	FURNISH SINGLE SHEET ALUMINUM SIGN (0.063"- UNFRAMED) SQFT	FURNISH SINGLE SHEET ALUMINUM SIGN (0.080"-UNFRAMED) SQFT	FURNISH SINGLE SHEET ALUMINUM SIGN (0.080"-FRAMED) SQFT	FURNISH SINGLE SHEET ALUMINUM SIGN FOR RETROREFLECTIVE SHEETING (TYPE XI) (0.063" - UNFRAMED) SQFT	FURNISH SINGLE SHEET ALUMINUM SIGN FOR RETROREFLECTIVE SHEETING (TYPE XI) (0.063" - FRAMED) SQFT	FURNISH SINGLE SHEET ALUMINUM SIGN FOR RETROREFLECTIVE SHEETING (TYPE XI) (0.080" - UNFRAMED) SQFT	FURNISH SINGLE SHEET ALUMINUM SIGN FOR RETROREFLECTIVE SHEETING (TYPE XI) (0.080" - FRAMED) SQFT	FURNISH LAMINATED PANEL SIGN FOR RETROREFLECTIVE SHEETING (TYPE XI) (1" - TYPE B) SQFT	RETROREFLECTIVE SHEETING (TYPE XI) SQFT
PD-2	2-3	W11-3	DEER CROSSING SYMBOL	48 x 48	X	FY	XI	BLACK								16.0			16.0
	2-3	W7-3a	NEXT 9 MILES	24 x 36	X	FY	XI	BLACK						6.0					6.0
	2-5	G66-56 (CA)	TERMINAL ROUTE SYMBOL	24 x 24	X	BLUE	XI	WHITE	XI					4.0					4.0
	2-7	R2-1	SPEED LIMIT 65	48 x 60	X	WHITE	IX	BLACK				20.0							
	2-9	R6-3 (CA)	TRUCKS 3 AXLES OR MORE 55	48 x 60	X	WHITE	IX	BLACK				20.0							
PD-3	3-2	G5 (CA)	RENO 17, CARSON CITY 47	120 x 42	X	GREEN	XI	WHITE	XI	X							35.0		35.0
	3-4	SG42-7 (CA)	EXIT 83, CAMPING, FOOD	138 x 90	X	BLUE	XI	WHITE	XI									86.3	86.3
	3-6	R6-4 (CA)	ALL VEHICLES WHEN TOWING 55	48 x 60	X	WHITE	IX	BLACK				20.0							
PD-4	4-2	SG42-2 (CA)	FUEL EXIT 83	180 x 72	X	BLUE	XI	WHITE	XI									90.0	90.0
	4-4	R4-16	KEEP RIGHT EXCEPT TO PASS	48 x 60	X	WHITE	IX	BLACK				20.0							
PD-5	5-2	G83 (CA)	BORDERTOWN 1 MILE	144 x 78	X	GREEN	XI	WHITE	XI	X								78.0	78.0
	5-4	SR15 (CA)	SEATBELT SYMBOL	24 x 36	X	WHITE	IX	BLACK			6.0								
	5-4	SR15a (CA)	SAFETY BELT LAW ENFORCED	18 x 18	X	WHITE	IX	BLACK			2.3								
PD-9	9-2	G11-4.1 (CA)	LONG VALLEY UC, BRIDGE 13-18L, 395 SIE R2.24	44 x 18	X	WHITE	XI	BLACK								5.5			5.5
	9-4	G11-4.1 (CA)	LONG VALLEY UC, BRIDGE 13-18R, 395 SIE R2.19	44 x 18	X	WHITE	XI	BLACK								5.5			5.5
PD-10	10-2	R3-7L	LEFT LANE MUST TURN LEFT	30 x 30	X	WHITE	IX	BLACK			6.3								
	10-4	R1-1	STOP	36 x 36	X	RED	IX	WHITE	IX		9.0								
	10-4	R3-2	LEFT TURN PROHIBITED SYMBOL	30 x 30	X	WHITE	IX	BLACK			6.3								
	10-6	R1-1	STOP	36 x 36	X	RED	IX	WHITE	IX		9.0								
	10-6	R3-2	LEFT TURN PROHIBITED SYMBOL	30 x 30	X	WHITE	IX	BLACK			6.3								
	10-8	R1-1	STOP	36 x 36	X	RED	IX	WHITE	IX		9.0								
	10-8	R3-1	RIGHT TURN PROHIBITED SYMBOL	30 x 30	X	WHITE	IX	BLACK			6.3								
	10-10	R3-7R	RIGHT LANE MUST TURN RIGHT	30 x 30	X	WHITE	IX	BLACK			6.3								
	10-12	R3-7L	LEFT LANE MUST TURN LEFT	30 x 30	X	WHITE	IX	BLACK			6.3								
	10-14	R1-1	STOP	36 x 36	X	RED	IX	WHITE	IX		9.0								
	10-14	R3-1	RIGHT TURN PROHIBITED SYMBOL	36 x 36	X	WHITE	IX	BLACK			9.0								
										TOTAL THIS SHEET	90.8	80.0		10.0		27.0	35.0	254.3	326.3

SIGN QUANTITIES

SQ-12

REVISED BY	DATE REVISED
FRANK RIVAS	DAN FISHER

CALCULATED-DESIGNED BY | CHECKED BY

FUNCTIONAL SUPERVISOR: ROB STINGER

STATE OF CALIFORNIA - DEPARTMENT OF TRANSPORTATION
Caltrans® TRAFFIC OPS.

P:\proj\02\4E420_plans\pse\24e420od012.dgn

LAST REVISION 02-25-16 | DATE PLOTTED => 28-JUL-2016 | TIME PLOTTED => 13:51

Dist	COUNTY	ROUTE	POST MILES TOTAL PROJECT	SHEET No.	TOTAL SHEETS
02	Las, Sie,Las	70, 395	3.5/3.9 R0.0/R3.1,R0.0/R5.6	105	236

REGISTERED CIVIL ENGINEER 06-10-16 DATE

06-15-16
PLANS APPROVAL DATE

REGISTERED PROFESSIONAL ENGINEER FRANK RIVAS No. C53592 Exp. 6/30/17 CIVIL STATE OF CALIFORNIA

THE STATE OF CALIFORNIA OR ITS OFFICERS OR AGENTS SHALL NOT BE RESPONSIBLE FOR THE ACCURACY OR COMPLETENESS OF SCANNED COPIES OF THIS PLAN SHEET.

ROADSIDE SIGN PANEL QUANTITIES

SHEET No.	SIGN No.	SIGN CODE	SIGN MESSAGE/DESCRIPTION	PANEL SIZE L x D	SINGLE FACED	SIGN FACING MATERIAL					FURNISH SINGLE SHEET ALUMINUM SIGN (0.063"- UNFRAMED)	FURNISH SINGLE SHEET ALUMINUM SIGN (0.080"-UNFRAMED)	FURNISH SINGLE SHEET ALUMINUM SIGN (0.080"-FRAMED)	FURNISH SINGLE SHEET ALUMINUM SIGN FOR RETROREFLECTIVE SHEETING (TYPE XI) (0.063" - UNFRAMED)	FURNISH SINGLE SHEET ALUMINUM SIGN FOR RETROREFLECTIVE SHEETING (TYPE XI) (0.063" - FRAMED)	FURNISH SINGLE SHEET ALUMINUM SIGN FOR RETROREFLECTIVE SHEETING (TYPE XI) (0.080" - UNFRAMED)	FURNISH SINGLE SHEET ALUMINUM SIGN FOR RETROREFLECTIVE SHEETING (TYPE XI) (0.080" - FRAMED)	FURNISH LAMINATED PANEL SIGN FOR RETROREFLECTIVE SHEETING (TYPE XI) (1" - TYPE B)	RETROREFLECTIVE SHEETING (TYPE XI)
						BACKGROUND		LEGEND											
				INCHES		SHEETING COLOR	RETROREFLECTIVE ASTM TYPE	SHEETING COLOR	RETROREFLECTIVE ASTM TYPE	PROTECTIVE FILM (PREMIUM)	SQFT	SQFT	SQFT	SQFT	SQFT	SQFT	SQFT	SQFT	SQFT
PD-13	13-2	G10 (CA)	SIERRA COUNTY LINE	36 x 24	X	GREEN	XI	WHITE	XI	X				6.0					6.0
	13-4	G10 (CA)	LASSEN COUNTY LINE	36 x 24	X	GREEN	XI	WHITE	XI	X				6.0					6.0
	13-6	G11-4.1 (CA)	EVANS CANYON UC, BRIDGE 7-72R, 395 LAS R0.10	44 x 18	X	WHITE	XI	BLACK								5.5			5.5
	13-8	G11-4.1 (CA)	EVANS CANYON UC, BRIDGE 7-72L, 395 LAS R0.11	44 x 18	X	WHITE	XI	BLACK								5.5			5.5
PD-14	14-1	Spl-A	INSPECTION STATION 1 MILE	162 x 84	X	GREEN	XI	WHITE	XI	X								94.5	94.5
	14-1	SPl-B	ALL VEHICLES PREPARE TO STOP	162 x 42	X	FY	XI	BLACK		X								47.3	47.3
PD-15	15-1	W20-3	FREEWAY CLOSED AHEAD	48 x 48	X	FY	XI	BLACK								16.0			16.0
	15-2	W20-3	FREEWAY CLOSED AHEAD	48 x 48	X	FY	XI	BLACK								16.0			16.0
PD-16	16-1	W9-3L	LEFT LANE CLOSED AHEAD	48 x 48	X	FY	XI	BLACK								16.0			16.0
	16-2	W9-3L	LEFT LANE CLOSED AHEAD	48 x 48	X	FY	XI	BLACK								16.0			16.0
PD-17	17-1	W4-2L	LEFT LANE ENDS	48 x 48	X	FY	XI	BLACK								16.0			16.0
	17-2	W4-2L	LEFT LANE ENDS	48 x 48	X	FY	XI	BLACK								16.0			16.0
	17-4	G11-4.1 (CA)	SCOTT UNDERCROSSING, BRIDGE 7-75R, 395 LAS R1.09	44 x 18	X	WHITE	XI	BLACK								5.5			5.5
	17-6	G11-4.1 (CA)	SCOTT UNDERCROSSING, BRIDGE 7-75L, 395 LAS R1.10	44 x 18	X	WHITE	XI	BLACK								5.5			5.5
	17-7	G11-4.1 (CA)	DETOUR AHEAD	48 x 48	X	YELLOW	XI	BLACK								16.0			16.0
	17-8	G11-4.1 (CA)	DETOUR AHEAD	48 x 48	X	YELLOW	XI	BLACK								16.0			16.0
PD-18	18-2	SPL-C	INSPECTION STATION	144 x 84	X	GREEN	XI	WHITE	XI	X								84.0	84.0
	18-2	SPL-D	ALL VEHICLES STOP AHEAD	144 x 42	X	FY	XI	BLACK		X								42.0	42.0
	18-4	W3-1	STOP AHEAD	48 x 48	X	FY	XI	BLACK								16.0			16.0
	18-6	D8-3	INSPECTION STATION	84 x 60	X	GREEN	XI	WHITE	XI	X							35.0		35.0
	18-7	SPL-4	TRUCK - BUS USE LEFT LANE	54 x 42	X	WHITE	IX	BLACK		X		15.8							
PD-19	19-2	R2-1	SPEED LIMIT 65	48 x 60	X	WHITE	IX	BLACK				20.0							
	19-2	R48-1 (CA)	RADAR ENFORCED	48 x 24	X	WHITE	IX	BLACK				8.0							
PD-20	20-1	G8-7 (CA)	BRINGMAN RD, COUNTRY LN	90 x 36	X	GREEN	XI	WHITE	XI	X							22.5		22.5
	20-3	R6-3 (CA)	TRUCKS 3 AXLES OR MORE 55	48 x 60	X	WHITE	IX	BLACK				20.0							
	20-5	R3-7L	LEFT LANE MUST TURN LEFT	30 x 30	X	WHITE	IX	BLACK			6.3								
										TOTAL THIS SHEET	6.3	63.8		12.0		166.0	57.5	267.8	503.3

SIGN QUANTITIES

SQ-13

REVISED BY | DATE REVISED
FRANK RIVAS | DAN FISHER
CALCULATED-DESIGNED BY | CHECKED BY
FUNCTIONAL SUPERVISOR: ROB STINGER

STATE OF CALIFORNIA - DEPARTMENT OF TRANSPORTATION
Caltrans® TRAFFIC OPS.

P:\proj1\02\4E420_plans\pse\24e420od013.dgn

LAST REVISION 02-25-16 | DATE PLOTTED => 28-JUL-2016 | TIME PLOTTED => 13:51

Dist	COUNTY	ROUTE	POST MILES TOTAL PROJECT	SHEET No.	TOTAL SHEETS
02	Las, Sie,Las	70, 395	3.5/3.9 R0.0/R3.1,R0.0/R5.6	106	236

Frank J. Rivas 06-10-16
REGISTERED CIVIL ENGINEER DATE

06-15-16
PLANS APPROVAL DATE

REGISTERED PROFESSIONAL ENGINEER FRANK RIVAS No. C53592 Exp. 6/30/17 CIVIL STATE OF CALIFORNIA

THE STATE OF CALIFORNIA OR ITS OFFICERS OR AGENTS SHALL NOT BE RESPONSIBLE FOR THE ACCURACY OR COMPLETENESS OF SCANNED COPIES OF THIS PLAN SHEET.

ROADSIDE SIGN PANEL QUANTITIES

SHEET No.	SIGN No.	SIGN CODE	SIGN MESSAGE/DESCRIPTION	PANEL SIZE L x D	SINGLE FACED	SIGN FACING MATERIAL					FURNISH SINGLE SHEET ALUMINUM SIGN (0.063"- UNFRAMED)	FURNISH SINGLE SHEET ALUMINUM SIGN (0.080"-UNFRAMED)	FURNISH SINGLE SHEET ALUMINUM SIGN (0.080"-FRAMED)	FURNISH SINGLE SHEET ALUMINUM SIGN FOR RETROREFLECTIVE SHEETING (TYPE XI) (0.063" - UNFRAMED)	FURNISH SINGLE SHEET ALUMINUM SIGN FOR RETROREFLECTIVE SHEETING (TYPE XI) (0.063" - FRAMED)	FURNISH SINGLE SHEET ALUMINUM SIGN FOR RETROREFLECTIVE SHEETING (TYPE XI) (0.080" - UNFRAMED)	FURNISH SINGLE SHEET ALUMINUM SIGN FOR RETROREFLECTIVE SHEETING (TYPE XI) (0.080" - FRAMED)	FURNISH LAMINATED PANEL SIGN FOR RETROREFLECTIVE SHEETING (TYPE XI) (1" - TYPE B)	RETROREFLECTIVE SHEETING (TYPE XI)
						BACKGROUND		LEGEND											
						SHEETING COLOR	RETROREFLECTIVE ASTM TYPE	SHEETING COLOR	RETROREFLECTIVE ASTM TYPE	PROTECTIVE FILM (PREMIUM)									
				INCHES							SQFT	SQFT	SQFT	SQFT	SQFT	SQFT	SQFT	SQFT	SQFT
PD-20	20-7	R1-1	STOP	30 x 30	X	RED	IX	WHITE	IX		6.3								
	20-7	R3-1	RIGHT TURN PROHIBITED SYMBOL	30 x 30	X	WHITE	IX	BLACK			6.3								
	20-9	R1-1	STOP	30 x 30	X	RED	IX	WHITE	IX		6.3								
	20-9	R3-2	LEFT TURN PROHIBITED SYMBOL	30 x 30	X	WHITE	IX	BLACK			6.3								
	20-11	R1-1	STOP	30 x 30	X	RED	IX	WHITE	IX		6.3								
	20-11	R3-1	RIGHT TURN PROHIBITED SYMBOL	30 x 30	X	WHITE	IX	BLACK			6.3								
	20-13	R1-1	STOP	30 x 30	X	RED	IX	WHITE	IX		6.3								
	20-13	R3-2	LEFT TURN PROHIBITED SYMBOL	30 x 30	X	WHITE	IX	BLACK			6.3								
	20-15	R3-7R	RIGHT LANE MUST TURN RIGHT	30 x 30	X	WHITE	IX	BLACK			6.3								
	20-17	R3-7L	LEFT LANE MUST TURN LEFT	30 x 30	X	WHITE	IX	BLACK			6.3								
	20-19	R6-4 (CA)	ALL VEHICLES WHEN TOWING 55	48 x 60	X	WHITE	IX	BLACK				20.0							
	20-20	G8-7 (CA)	COUNTRY LN, BRINGMAN RD	90 x 36	X	GREEN	XI	WHITE	XI	X							22.5		22.5
PD-21	21-2	W70 (CA)	CROSS TRAFFIC AHEAD	60 x 60	X	FY	XI	BLACK							25.0				25.0
	21-2	W71 (CA)	NEXT 6 MILES	54 x 28	X	FY	XI	BLACK								10.5			10.5
	21-4	W70 (CA)	CROSS TRAFFIC AHEAD	60 x 60	X	FY	XI	BLACK							25.0				25.0
	21-4	W71 (CA)	NEXT 6 MILES	54 x 28	X	FY	XI	BLACK								10.5			10.5
PD-23	23-2	D9-11	SERVICES 6 MILES AHEAD	78 x 56	X	BLUE	XI	WHITE	XI						30.3				30.3
PD-25	25-2	G83 (CA)	Jct 70, PORTOLA, QUINCY 1 MILE	108 x 132	X	GREEN	XI	WHITE	XI	X							99.0		99.0
	25-2	D9-11	PHONE SYMBOL	24 x 24	X	BLUE	XI	WHITE	XI					4.0					4.0
	25-2	G66-56	TERMINAL ROUTE SYMBOL	24 x 24	X	BLUE	XI	WHITE	XI					4.0					4.0
PD-26	26-2	R6-4 (CA)	ALL VEHICLES WHEN TOWING 55	48 x 60	X	WHITE	IX	BLACK				20.0							
	26-4	R2-1	SPEED LIMIT 65	48 x 60	X	WHITE	IX	BLACK				20.0							
	26-6	R6-3 (CA)	TRUCKS 3 AXLES OR MORE 55	48 x 60	X	WHITE	IX	BLACK				20.0							
PD-27	27-2	SG42-1 (CA)	FUEL NEXT RIGHT	168 x 96	X	BLUE	XI	WHITE	XI									112.0	112.0
	27-4	R2-1	SPEED LIMIT 65	48 x 60	X	WHITE	IX	BLACK				20.0							
										TOTAL THIS SHEET	62.5	100.0		8.0	80.3	21.0	121.5	112.0	342.8

SIGN QUANTITIES

SQ-14

REVISED BY | DATE REVISED
FRANK RIVAS | DAN FISHER
CALCULATED-DESIGNED BY | CHECKED BY
FUNCTIONAL SUPERVISOR: ROB STINGER

STATE OF CALIFORNIA - DEPARTMENT OF TRANSPORTATION
Caltrans® TRAFFIC OPS.

P:\proj1\02\4E420_plans\pse\24e420od014.dgn

LAST REVISION 02-25-16 | DATE PLOTTED => 28-JUL-2016 TIME PLOTTED => 13:51

Dist	COUNTY	ROUTE	POST MILES TOTAL PROJECT	SHEET No.	TOTAL SHEETS
02	Las, Sie,Las	70, 395	3.5/3.9 R0.0/R3.1,R0.0/R5.6	107	236

Frank J. Rivas 06-10-16
REGISTERED CIVIL ENGINEER DATE

06-15-16
PLANS APPROVAL DATE

REGISTERED PROFESSIONAL ENGINEER FRANK RIVAS No. C53592 Exp. 6/30/17 CIVIL STATE OF CALIFORNIA

THE STATE OF CALIFORNIA OR ITS OFFICERS OR AGENTS SHALL NOT BE RESPONSIBLE FOR THE ACCURACY OR COMPLETENESS OF SCANNED COPIES OF THIS PLAN SHEET.

ROADSIDE SIGN PANEL QUANTITIES

SHEET No.	SIGN No.	SIGN CODE	SIGN MESSAGE/DESCRIPTION	PANEL SIZE L x D	SINGLE FACED	SIGN FACING MATERIAL					FURNISH SINGLE SHEET ALUMINUM SIGN (0.063"- UNFRAMED)	FURNISH SINGLE SHEET ALUMINUM SIGN (0.080"-UNFRAMED)	FURNISH SINGLE SHEET ALUMINUM SIGN (0.080"-FRAMED)	FURNISH SINGLE SHEET ALUMINUM SIGN FOR RETROREFLECTIVE SHEETING (TYPE XI) (0.063" - UNFRAMED)	FURNISH SINGLE SHEET ALUMINUM SIGN FOR RETROREFLECTIVE SHEETING (TYPE XI) (0.063" - FRAMED)	FURNISH SINGLE SHEET ALUMINUM SIGN FOR RETROREFLECTIVE SHEETING (TYPE XI) (0.080" - UNFRAMED)	FURNISH SINGLE SHEET ALUMINUM SIGN FOR RETROREFLECTIVE SHEETING (TYPE XI) (0.080" - FRAMED)	FURNISH LAMINATED PANEL SIGN FOR RETROREFLECTIVE SHEETING (TYPE XI) (1" - TYPE B)	RETROREFLECTIVE SHEETING (TYPE XI)
						BACKGROUND		LEGEND											
				INCHES		SHEETING COLOR	RETROREFLECTIVE ASTM TYPE	SHEETING COLOR	RETROREFLECTIVE ASTM TYPE	PROTECTIVE FILM (PREMIUM)	SQFT	SQFT	SQFT	SQFT	SQFT	SQFT	SQFT	SQFT	SQFT
PD-27	27-6	R6-3 (CA)	TRUCKS 3 AXLES OR MORE 55	48 x 60	X	WHITE	IX	BLACK				20.0							
	27-8	G5	RENO 24, CARSON CITY 54	120 x 42	X	GREEN	XI	WHITE	XI	X							35.0		35.0
	27-10	R6-4 (CA)	ALL VEHICLES WHEN TOWING 55	48 x 60	X	WHITE	IX	BLACK				20.0							
PD-28	28-2	G85 (CA)	Jct 70, PORTOLA, QUINCY	108 x 138	X	GREEN	XI	WHITE	XI	X							103.5		103.5
	28-2	D9-1	PHONE SYMBOL	30 x 30	X	BLUE	XI	WHITE	XI					6.3					6.3
	28-4	W13-2	EXIT 50 MPH	48 x 60	X	FY	XI	BLACK								20.0			20.0
	28-6	W3-1	STOP AHEAD SYMBOL	48 x 48	X	FY	XI	BLACK								16.0			16.0
	28-8	E5-1A	EXIT 8	78 x 60	X	GREEN	XI	WHITE	XI	X					32.5				32.5
PD-29	29-2	W4-1	MERGE FROM RIGHT SYMBOL	48 x 48	X	FY	XI	BLACK								16.0			16.0
	29-4	SG42-5 (CA)	FUEL RIGHT ARROW	66 x 36	X	BLUE	XI	WHITE	XI						16.5				16.5
	29-6	W4-1	MERGE FROM LEFT ARROW	36 x 36	X	FY	XI	BLACK						9.0					9.0
	29-8	W6-2	END DIVIDED HIGHWAY	36 x 36	X	FY	XI	BLACK						9.0					9.0
	29-8	W34A (CA)	½ MILE AHEAD	36 x 30	X	FY	XI	BLACK						7.5					7.5
	29-10	G8-4 (CA)	PORTOLA QUINCY LEFT	102 x 42	X	GREEN	XI	WHITE	XI	X							29.8		29.8
	29-12	R1-2	YEILD	36 x 36	X	WHITE	IX	RED	IX		9.0								
	29-15	G77A (CA)	PORTOLA, QUINCY, RENO	78 x 78	X	GREEN	XI	WHITE	XI	X					42.3				42.3
	29-17	G11-4.1 (CA)	395/70 SEPARATION, BRIDGE 7-76L, 395 LAS R4.63	44 x 18	X	WHITE	XI	BLACK						5.5					5.5
	29-19	W1-2	CURVE	36 x 36	X	FY	XI	BLACK						9.0					9.0
	29-19	W13-1	20 MPH	24 x 24	X	FY	XI	BLACK						4.0					4.0
PD-30	30-2	W6-2	END DIVIDED HIGHWAY	48 x 48	X	FY	XI	BLACK								16.0			16.0
	30-2	W34A (CA)	½ MILE AHEAD	48 x 36	X	FY	XI	BLACK								12.0			12.0
	30-4	G11-4.1 (CA)	395/70 SEPARATION, BRIDGE 7-76R, 395 LAS R4.60	44 x 18	X	WHITE	XI	BLACK						5.5					5.5
	30-6	M4-6	END	24 x 12	X	GREEN	XI	WHITE	XI					2.0					2.0
	30-6	G28-2 (CA)	CALIFORNIA 70	25 x 28	X	GREEN	XI	WHITE	XI					4.9					4.9
	30-6	M3-1	NORTH	24 x 12	X	WHITE	XI	BLACK						2.0					2.0
	30-6	G26-2 (CA)	US 395	28 x 24	X	WHITE	XI	BLACK						4.7					4.7
	30-6	M6-1	LEFT ARROW	21 x 15	X	WHITE	XI	BLACK						2.2					2.2
										TOTAL THIS SHEET	9.0	40.0		71.5	91.3	80.0	168.3		411.0

SIGN QUANTITIES

SQ-15

REVISED BY | DATE REVISED
FRANK RIVAS | DAN FISHER
CALCULATED-DESIGNED BY | CHECKED BY
FUNCTIONAL SUPERVISOR: ROB STINGER

STATE OF CALIFORNIA - DEPARTMENT OF TRANSPORTATION
Caltrans® TRAFFIC OPS.

P:\proj1\02\4E420_plans\pse\24e420od015.dgn

LAST REVISION 02-25-16 | DATE PLOTTED => 28-JUL-2016 TIME PLOTTED => 13:51

Dist	COUNTY	ROUTE	POST MILES TOTAL PROJECT	SHEET No.	TOTAL SHEETS
02	Las, Sie,Las	70, 395	3.5/3.9 R0.0/R3.1,R0.0/R5.6	108	236

REGISTERED CIVIL ENGINEER 06-10-16 DATE

06-15-16
PLANS APPROVAL DATE

REGISTERED PROFESSIONAL ENGINEER FRANK RIVAS No. C53592 Exp. 6/30/17 CIVIL STATE OF CALIFORNIA

THE STATE OF CALIFORNIA OR ITS OFFICERS OR AGENTS SHALL NOT BE RESPONSIBLE FOR THE ACCURACY OR COMPLETENESS OF SCANNED COPIES OF THIS PLAN SHEET.

ROADSIDE SIGN PANEL QUANTITIES

SHEET No.	SIGN No.	SIGN CODE	SIGN MESSAGE/DESCRIPTION	PANEL SIZE L x D INCHES	SINGLE FACED	SIGN FACING MATERIAL: BACKGROUND SHEETING COLOR	BACKGROUND RETROREFLECTIVE ASTM TYPE	LEGEND SHEETING COLOR	LEGEND RETROREFLECTIVE ASTM TYPE	PROTECTIVE FILM (PREMIUM)	FURNISH SINGLE SHEET ALUMINUM SIGN (0.063"- UNFRAMED) SQFT	FURNISH SINGLE SHEET ALUMINUM SIGN (0.080"-UNFRAMED) SQFT	FURNISH SINGLE SHEET ALUMINUM SIGN (0.080"-FRAMED) SQFT	FURNISH SINGLE SHEET ALUMINUM SIGN FOR RETROREFLECTIVE SHEETING (TYPE XI) (0.063" - UNFRAMED) SQFT	FURNISH SINGLE SHEET ALUMINUM SIGN FOR RETROREFLECTIVE SHEETING (TYPE XI) (0.063" - FRAMED) SQFT	FURNISH SINGLE SHEET ALUMINUM SIGN FOR RETROREFLECTIVE SHEETING (TYPE XI) (0.080" - UNFRAMED) SQFT	FURNISH SINGLE SHEET ALUMINUM SIGN FOR RETROREFLECTIVE SHEETING (TYPE XI) (0.080" - FRAMED) SQFT	FURNISH LAMINATED PANEL SIGN FOR RETROREFLECTIVE SHEETING (TYPE XI) (1" - TYPE B) SQFT	RETROREFLECTIVE SHEETING (TYPE XI) SQFT
PD-30	30-8	G92 (CA)	FREEWAY ENTRANCE	48 x 30	X	GREEN	XI	WHITE	XI							10.0			10.0
	30-8	M3-1	NORTH	24 x 12	X	WHITE	XI	BLACK						2.0					2.0
	30-8	G26-2 (CA)	US 395	25 x 28	X	WHITE	XI	BLACK						4.9					4.9
	30-8	M6-2	RIGHT ARROW	21 x 15	X	WHITE	XI	BLACK						2.2					2.2
	30-10	G92 (CA)	FREEWAY ENTRANCE	48 x 30	X	GREEN	XI	WHITE	XI							10.0			10.0
	30-10	M3-1	NORTH	24 x 12	X	WHITE	XI	BLACK						2.0					2.0
	30-10	G26-2 (CA)	US 395	25 x 28	X	WHITE	XI	BLACK						4.9					4.9
	30-10	M6-2	LEFT ARROW	21 x 15	X	WHITE	XI	BLACK						2.2					2.2
	30-12	G77A (CA)	RENO, SUSANVILLE	78 x 78	X	GREEN	XI	WHITE	XI	X					42.3				42.3
PD-31	31-2	G92 (CA)	FREEWAY ENTRANCE	48 x 30	X	GREEN	XI	WHITE	XI							10.0			10.0
	31-2	G26-2 (CA)	US 395	25 x 28	X	WHITE	XI	BLACK						4.9					4.9
	31-2	M3-3	SOUTH	24 x 12	X	WHITE	XI	BLACK						2.0					2.0
	31-2	M6-2	LEFT ARROW	21 x 15	X	WHITE	XI	BLACK						2.2					2.2
	31-4	G92 (CA)	FREEWAY ENTRANCE	48 x 30	X	GREEN	XI	WHITE	XI							10.0			10.0
	31-4	G26-2 (CA)	US 395	25 x 28	X	WHITE	XI	BLACK						4.9					4.9
	31-4	M3-3	SOUTH	24 x 12	X	WHITE	XI	BLACK						2.0					2.0
	31-4	M6-2	RIGHT ARROW	21 x 15	X	WHITE	XI	BLACK						2.2					2.2
PD-32	32-2	W4-1R	MERGE	36 x 36	X	FY	XI	BLACK						9.0					9.0
	32-4	W13-2	EXIT 25 MPH	48 x 60	X	FY	XI	BLACK								20.0			20.0
	32-6	E5-1A	EXIT 8 RIGHT	78 x 60	X	GREEN	XI	WHITE	XI						32.5				32.5
	32-8	G85-3 (CA)	JCT 70, PORTOLA, QUINCY	108 x 138	X	GREEN	XI	WHITE	XI	X							103.5		103.5
	32-8	D9-11	DIESEL FUEL	24 x 24	X	BLUE	XI	WHITE	XI					4.0					4.0
	32-8	G81-52 (CA)	LP GAS	24 x 6	X	BLUE	XI	WHITE	XI					1.0					1.0
	32-8	G33-1 (CA)	LEFT ARROW	24 x 6	X	BLUE	XI	WHITE	XI					1.0					1.0
	32-10	W9-1	RIGHT LANE ENDS	48 x 48	X	FY	XI	BLACK								16.0			16.0
	32-12	W9-1	RIGHT LANE ENDS	48 x 48	X	FY	XI	BLACK								16.0			16.0
										TOTAL THIS SHEET				51.2	74.8	92.0	103.5		321.4

SIGN QUANTITIES

SQ-16

REVISED BY | DATE REVISED
FRANK RIVAS | DAN FISHER
CALCULATED-DESIGNED BY | CHECKED BY
FUNCTIONAL SUPERVISOR: ROB STINGER

STATE OF CALIFORNIA - DEPARTMENT OF TRANSPORTATION
Caltrans® TRAFFIC OPS.

P:\proj1\02\4E420_plans\pse\24e420od016.dgn

LAST REVISION 02-25-16 | DATE PLOTTED => 28-JUL-2016 | TIME PLOTTED => 13:51

Dist	COUNTY	ROUTE	POST MILES TOTAL PROJECT	SHEET No.	TOTAL SHEETS
02	Las, Sie,Las	70, 395	3.5/3.9 R0.0/R3.1,R0.0/R5.6	109	236

Frank J. Rivas 06-10-16
REGISTERED CIVIL ENGINEER DATE

06-15-16
PLANS APPROVAL DATE

REGISTERED PROFESSIONAL ENGINEER FRANK RIVAS No. C53592 Exp. 6/30/17 CIVIL STATE OF CALIFORNIA

THE STATE OF CALIFORNIA OR ITS OFFICERS OR AGENTS SHALL NOT BE RESPONSIBLE FOR THE ACCURACY OR COMPLETENESS OF SCANNED COPIES OF THIS PLAN SHEET.

ROADSIDE SIGN PANEL QUANTITIES

SHEET No.	SIGN No.	SIGN CODE	SIGN MESSAGE/DESCRIPTION	PANEL SIZE L x D	SINGLE FACED	SIGN FACING MATERIAL					FURNISH SINGLE SHEET ALUMINUM SIGN (0.063"- UNFRAMED)	FURNISH SINGLE SHEET ALUMINUM SIGN (0.080"-UNFRAMED)	FURNISH SINGLE SHEET ALUMINUM SIGN (0.080"-FRAMED)	FURNISH SINGLE SHEET ALUMINUM SIGN FOR RETROREFLECTIVE SHEETING (TYPE XI) (0.063" - UNFRAMED)	FURNISH SINGLE SHEET ALUMINUM SIGN FOR RETROREFLECTIVE SHEETING (TYPE XI) (0.063" - FRAMED)	FURNISH SINGLE SHEET ALUMINUM SIGN FOR RETROREFLECTIVE SHEETING (TYPE XI) (0.080" - UNFRAMED)	FURNISH SINGLE SHEET ALUMINUM SIGN FOR RETROREFLECTIVE SHEETING (TYPE XI) (0.080" - FRAMED)	FURNISH LAMINATED PANEL SIGN FOR RETROREFLECTIVE SHEETING (TYPE XI) (1" - TYPE B)	RETROREFLECTIVE SHEETING (TYPE XI)
						BACKGROUND		LEGEND											
						SHEETING COLOR	RETROREFLECTIVE ASTM TYPE	SHEETING COLOR	RETROREFLECTIVE ASTM TYPE	PROTECTIVE FILM (PREMIUM)									
				INCHES							SQFT	SQFT	SQFT	SQFT	SQFT	SQFT	SQFT	SQFT	SQFT
PD-32	32-14	G47 (CA)	NORTH	24 x 12	X	WHITE	XI	BLACK						2.0					2.0
	32-14	G26-2 (CA)	US 395	21 x 18	X	WHITE	XI	BLACK						2.6					2.6
PD-33	33-2	W4-2	RIGHT LANE ENDS SYMBOL	48 x 48	X	FY	XI	BLACK								16.0			16.0
	33-4	S30-5 (CA)	CHECK HEADLIGHTS	84 x 42	X	WHITE	IX	BLACK					24.5						
	33-6	W4-2	RIGHT LANE ENDS SYMBOL	48 x 48	X	FY	XI	BLACK								16.0			16.0
	33-8	S30-5	CHECK HEADLIGHTS	84 x 42	X	WHITE	IX	BLACK					24.5						
	33-10	R4-1	DO NOT PASS	36 x 48	X	WHITE	IX	BLACK			12.0								
	33-12	R4-1	DO NOT PASS	36 x 48	X	WHITE	IX	BLACK			12.0								
	33-14	S30-1 (CA)	DAYLIGHT HEADLIGHT SECTION	84 x 54	X	WHITE	IX	BLACK					31.5						
	33-16	S30-1 (CA)	DAYLIGHT HEADLIGHT SECTION	84 x 54	X	WHITE	IX	BLACK					31.5						
	33-18	S30-2 (CA)	TURN ON HEADLIGHTS NEXT 36 MILES	108 x 54	X	WHITE	IX	BLACK					40.5						
	33-20	S30-2 (CA)	TURN ON HEADLIGHTS NEXT 36 MILES	108 x 54	X	WHITE	IX	BLACK					40.5						
	33-22	S30-3 (CA)	END DAYLIGHT HEADLIGHT SECTION	84 x 66	X	WHITE	IX	BLACK					38.5						
PD-34	34-2	W6-3	TWO WAY TRAFFIC SYMBOL	36 x 36	X	FY	XI	BLACK						9.0					9.0
	34-4	W6-1	DIVIDED TRAFFIC AHEAD SYMBOL	36 x 36	X	FY	XI	BLACK						9.0					9.0
	34-6	R2-1	SPEED LIMIT 65	48 x 60	X	WHITE	IX	BLACK				20.0							
	34-6	R48 (CA)	SPEED ENFORCED BY RADAR	48 x 24	X	WHITE	IX	BLACK				8.0							
PD-35	35-2	R4-1	DO NOT PASS	24 x 30	X	WHITE	IX	BLACK			5.0								
	35-4	R6-3 (CA)	TRUCKS 3 AXLES OR MORE 55	48 x 60	X	WHITE	IX	BLACK				20.0							
	35-6	SW17-1 (CA)	GUSTY WIND AREA NEXT 56 MILES	132 x 48	X	FY	XI	BLACK									44.0		44.0
PD-36	36-2	R6-4 (CA)	ALL VEHICLES WHEN TOWING 55	48 x 60	X	WHITE	IX	BLACK				20.0							
	36-4	G70-2 (CA)	EXIT 8	78 x 60	X	GREEN	XI	WHITE	XI						32.5				32.5
	36-4	G83-1 (CA)	JCT 70, PORTOLA, QUINCY	144 x 138	X	GREEN	XI	WHITE	XI									138.0	138.0
	36-4	D9-1	PHONE SYMBOL	24 x 24	X	BLUE	XI	WHITE	XI					4.0					4.0
	36-4	G66-56	TERMINAL ROUTE	24 x 24	X	BLUE	XI	WHITE	XI					4.0					4.0
										TOTAL THIS SHEET	29.0	68.0	231.5	30.6	32.5	32.0	44.0	138.0	277.1

SIGN QUANTITIES

SQ-17

REVISED BY	DATE REVISED
FRANK RIVAS	DAN FISHER

CALCULATED-DESIGNED BY / CHECKED BY

FUNCTIONAL SUPERVISOR: ROB STINGER

STATE OF CALIFORNIA - DEPARTMENT OF TRANSPORTATION
Caltrans® TRAFFIC OPS.

P:\proj\02\4E420_plans\pse\24e420od017.dgn

LAST REVISION 02-25-16 | DATE PLOTTED => 28-JUL-2016 | TIME PLOTTED => 13:52

Dist	COUNTY	ROUTE	POST MILES TOTAL PROJECT	SHEET No.	TOTAL SHEETS
02	Las, Sie,Las	70, 395	3.5/3.9 R0.0/R3.1,R0.0/R5.6	110	236

Frank J. Rivas 06-10-16
REGISTERED CIVIL ENGINEER DATE

06-15-16
PLANS APPROVAL DATE

REGISTERED PROFESSIONAL ENGINEER FRANK RIVAS No. C53592 Exp. 6/30/17 CIVIL STATE OF CALIFORNIA

THE STATE OF CALIFORNIA OR ITS OFFICERS OR AGENTS SHALL NOT BE RESPONSIBLE FOR THE ACCURACY OR COMPLETENESS OF SCANNED COPIES OF THIS PLAN SHEET.

ROADSIDE SIGN PANEL QUANTITIES

SHEET No.	SIGN No.	SIGN CODE	SIGN MESSAGE/DESCRIPTION	PANEL SIZE L x D	FACED	SIGN FACING MATERIAL					FURNISH SINGLE SHEET ALUMINUM SIGN (0.063"- UNFRAMED)	FURNISH SINGLE SHEET ALUMINUM SIGN (0.080"-UNFRAMED)	FURNISH SINGLE SHEET ALUMINUM SIGN (0.080"-FRAMED)	FURNISH SINGLE SHEET ALUMINUM SIGN FOR RETROREFLECTIVE SHEETING (TYPE XI) (0.063" - UNFRAMED)	FURNISH SINGLE SHEET ALUMINUM SIGN FOR RETROREFLECTIVE SHEETING (TYPE XI) (0.063" - FRAMED)	FURNISH SINGLE SHEET ALUMINUM SIGN FOR RETROREFLECTIVE SHEETING (TYPE XI) (0.080" - UNFRAMED)	FURNISH SINGLE SHEET ALUMINUM SIGN FOR RETROREFLECTIVE SHEETING (TYPE XI) (0.080" - FRAMED)	FURNISH LAMINATED PANEL SIGN FOR RETROREFLECTIVE SHEETING (TYPE XI) (1" - TYPE B)	RETROREFLECTIVE SHEETING (TYPE XI)
						BACKGROUND		LEGEND											
						SHEETING COLOR	RETROREFLECTIVE ASTM TYPE	SHEETING COLOR	RETROREFLECTIVE ASTM TYPE	PROTECTIVE FILM (PREMIUM)									
				INCHES	SINGLE						SQFT	SQFT	SQFT	SQFT	SQFT	SQFT	SQFT	SQFT	SQFT
	37-2	G92 (CA)	FREEWAY ENTRANCE	48 x 30	X	GREEN	XI	WHITE	XI							10.0			10.0
	37-2	G26-2 (CA)	US 395	25 x 28	X	GREEN	XI	WHITE	XI					4.9					4.9
	37-2	M3-3	SOUTH	24 x 12	X	WHITE	XI	BLACK						2.0					2.0
	37-2	M6-2	RIGHT ARROW	21 x 15	X	WHITE	XI	BLACK						2.2					2.2
	37-3	G92 (CA)	FREEWAY ENTRANCE	48 x 30	X	GREEN	XI	WHITE	XI							10.0			10.0
PD-37	37-3	G26-2 (CA)	US 395	25 x 28	X	WHITE	XI	BLACK						4.9					4.9
	37-3	M3-3	SOUTH	24 x 12	X	WHITE	XI	BLACK						2.0					2.0
	37-3	M6-2	LEFT ARROW	21 x 15	X	WHITE	XI	BLACK						2.2					2.2
	37-5	R20H (CA)	TRUCK LENGTH LIMIT HWY 70	36 x 48	X	WHITE	IX	BLACK			12.0								
	37-5	SPL-6	65 MILES AHEAD	36 x 30	X	WHITE	IX	BLACK			7.5								
	37-7	G77 (CA)	SUSANVILLE NORTH 395 SOUTH RENO	120 x 120	X	GREEN	XI	WHITE	XI								100.0		100.0
								TOTAL THIS SHEET			19.5			18.1		20.0	100.0		138.1
SQ-18	29-B	G78 (CA)	395 NORTH, SUSANVILLE	168 x 80	X	GREEN	XI	WHITE	XI	X									
FROM OVERHEAD SIGN PANEL QUANTITIES SHEET SQ-19																			93.3
GRAND TOTAL											217.0	351.8	231.5	201.4	278.8	438.0	629.8	772.0	2413.9

SIGN QUANTITIES

SQ-18

STATE OF CALIFORNIA - DEPARTMENT OF TRANSPORTATION
Caltrans TRAFFIC OPS.

FUNCTIONAL SUPERVISOR: ROB STINGER
CALCULATED-DESIGNED BY: FRANK RIVAS
CHECKED BY: DAN FISHER
REVISED BY
DATE REVISED

P:\proj\02\4E420_plans\pse\24e420od018.dgn

LAST REVISION 02-25-16 | DATE PLOTTED => 28-JUL-2016 | TIME PLOTTED => 13:52

Dist	COUNTY	ROUTE	POST MILES TOTAL PROJECT	SHEET No.	TOTAL SHEETS
02	Las, Sie,Las	70, 395	3.5/3.9 R0.0/R3.1,R0.0/R5.6	111	236

Frank J. Rivas 06-10-16
REGISTERED CIVIL ENGINEER DATE

06-15-16
PLANS APPROVAL DATE

REGISTERED PROFESSIONAL ENGINEER FRANK RIVAS No. C53592 Exp. 6/30/17 CIVIL STATE OF CALIFORNIA

THE STATE OF CALIFORNIA OR ITS OFFICERS OR AGENTS SHALL NOT BE RESPONSIBLE FOR THE ACCURACY OR COMPLETENESS OF SCANNED COPIES OF THIS PLAN SHEET.

OVERHEAD SIGNS

SHEET No.	SIGN No.	SIGN CODE	SIGN MESSAGE/DESCRIPTION	PANEL SIZE L x D	REMOVE SIGN FROM SIGN FRAME	INSTALL SIGN PANEL ON EXISTING FRAME
				INCHES	EA	SQFT
PD-29	29-A	G78 (CA)	395 NORTH, SUSANVILLE	168 x 80	1	
	29-B	G78 (CA)	395 NORTH, SUSANVILLE	168 x 80		93.3
				GRAND TOTAL	1	93.3

OVERHEAD SIGN PANEL QUANTITIES

SHEET No.	SIGN No.	SIGN CODE	SIGN MESSAGE/DESCRIPTION	PANEL SIZE L x D	SINGLE FACED	SIGN FACING MATERIAL					FURNISH LAMINATED PANEL SIGN FOR RETROREFLECTIVE SHEETING (TYPE XI) (1" - TYPE A)	RETROREFLECTIVE SHEETING (TYPE XI)
						BACKGROUND		LEGEND				
						SHEETING COLOR	RETROREFLECTIVE ASTM TYPE	SHEETING COLOR	RETROREFLECTIVE ASTM TYPE	PROTECTIVE FILM (PREMIUM)		
				INCHES							SQFT	SQFT
PD-29	29-B	G78 (CA)	395 NORTH, SUSANVILLE	168 x 80	X	GREEN	XI	WHITE	XI	X	93.3	93.3*
										GRAND TOTAL	93.3	93.3*

* INCLUDED IN SUMMARY OF QUANTITIES SHEET SQ-18

SIGN QUANTITIES

SQ-19

REVISED BY	DATE REVISED

FRANK RIVAS — DAN FISHER — CALCULATED-DESIGNED BY — CHECKED BY — FUNCTIONAL SUPERVISOR: ROB STINGER

STATE OF CALIFORNIA - DEPARTMENT OF TRANSPORTATION
Caltrans® TRAFFIC OPS.

P:\proj1\02\4E420_plans\pse\24e420od019.dgn

LAST REVISION 02-25-16 | DATE PLOTTED => 28-JUL-2016 | TIME PLOTTED => 13:52

Dist	COUNTY	ROUTE	POST MILES TOTAL PROJECT	SHEET No.	TOTAL SHEETS
02	Las, Sie,Las	70, 395	3.5/3.9 R0.0/R3.1,R0.0/R5.6	112	218

REGISTERED CIVIL ENGINEER 06-12-16 DATE

06-15-16
PLANS APPROVAL DATE

REGISTERED PROFESSIONAL ENGINEER BYRON STANLEY No. C60161 Exp. 6-30-18 CIVIL STATE OF CALIFORNIA

THE STATE OF CALIFORNIA OR ITS OFFICERS OR AGENTS SHALL NOT BE RESPONSIBLE FOR THE ACCURACY OR COMPLETENESS OF SCANNED COPIES OF THIS PLAN SHEET.

ROADWAY QUANTITIES

LOCATION	TREATED WOOD WASTE	COLD PLANE ASPHALT CONCRETE PAVEMENT	ROADWAY EXCAVATION	SHOULDER BACKING	IMPORTED BORROW	CLASS 2 AGGREGATE BASE	HOT MIX ASPHALT (TYPE A)	RUBBERIZED HOT MIX ASPHALT (GAP GRADED)	12" RUMBLE STRIP (ASPHALT CONCRETE PAVEMENT)	PLACE HOT MIX ASPHALT (MISCELLANEOUS AREA)	TACK COAT	RECONSTRUCT CHAIN LINK FENCE	CRASH CUSHION, SAND FILLED	REMOVE CRASH CUSHION (SAND FILLED)	MINOR CONCRETE (Misc CONSTRUCTION)	COMMENTS/DESCRIPTION
	LB	SQYD	CY	TON	CY	CY	TON	TON	STA	SQYD	TON	LF	EA	EA	CY	
"S1" 9+47.6 TO 127+35	3190	992.8		1346.3				5529.2	228.0		21.8					Beg PROJECT TO LONG VALLEY UC
"S1" 128+12 TO 179+56	3980	693.6		579.0	18.0			2463.2	90.3		9.8					LONG VALLEY UC TO EVANS CANYON UC
"S1" 180+28 TO 231+59	3030	697.8		590.0				2399.7	101.6		9.6					EVANS CANYON UC TO SCOTT UC
"S1" 232+21 TO 417+22	3820	690.6		2062.9				8654.25	344.7		34.2					SCOTT UC TO 395/70 Sep
"S1" 418+74 TO 454+31		339.2		360.0				1656.2	63.5		6.6					395/70 Sep TO "A1"
"N1" 99+50 TO 215+49	2950	768.8		1331.1				5536.6	230.7		21.9					Beg PROJECT TO LONG VALLEY UC
"N1" 216+21 TO 266+42	3980	699.1		561.0				2413.8	88.5		9.6					LONG VALLEY UC TO EVANS CANYON UC
"N1" 267+17 TO 318+42	2710	688.7		588.7				2375.6	101.4		9.5					EVANS CANYON UC TO SCOTT UC
"N1" 319+10 TO 503+68	2550	687.7	38.4	1555.7	273.7			8557.5	328.1		33.7					SCOTT UC TO 395/70 Sep
"N1" 505+05 TO 541+32		355.9		365.5				1711.6	62.7		6.8					395/70 Sep TO "A1"
"A1" 600+06 TO 612+00		492.6		132.9				652.2	23.9		2.6					END PROJECT
"B1" 89+00 TO 109+15		3012.0		146.3				1372.0			5.4					ROUTE 70
"R1" AND "R2"			772.3	286.9	2632.3	67.0	92.0	678.0			3.0					
"R3"		311.6	632.4	166.1	2088.3	521.0	113.0	830.0			1.7					
"R4"		208.1	2015.0	173.4	61.8	373.0	96.0	711.0			1.7					
"R5" AND "R6"			536.2	340.9	228.4	464.0	336.0	1165.0			3.5					
"S1" 15+04		661.4					71.4									LONG VALLEY Rd INTERSECTION
"N1" 125+66 TO 129+78, R+			410.0	48.0		245.0	202.6	86.8		115.0						CHAIN ON AREA
"N1" 501+50 TO 503+70, L+			200.0	36.0	100.0	82.0	40.0									MAINTENANCE PULLOUT COUNT STATION
"N1" 171+17, "S1" 82+98				19.2				17.6			0.1					MAINTENANCE CROSSOVER
"S1" 136+31, L+		46.8		28.3				56.8			0.2					SCOTT ROAD LEFT
"S1" 136+31, "N1" 224+37				25.1				63.8			0.3					SCOTT ROAD MEDIAN
"N1" 224+37, R+		44.4		24.6				43.5			0.2					SCOTT ROAD RIGHT
"S1" 159+60.3 TO 160+44.9			13.3		49.8	25.6	18.4	12.3								MAINTENANCE PULLOUT COUNT STATION
"N1" 337+95 TO 345+22	1632	3316.5	30.0	* 150.6		17.1	629.1			102.5	1.8		22.0	22.0		INSPECTION STATION, U-11 ARRAY
"N1" 342+24, "S1" 255+15				28.6		238.3	402.6				0.3					MEDIAN CROSSOVER INSPECTION STATION
"S1" 281+60 L+		81.0		29.4				61.7			0.3					BRINGMAN ROAD LEFT
"N1" 368+68, "S1" 281+60				27.1				59.2			0.2					BRINGMAN Rd/COUNTRY Ln MEDIAN
"N1" 368+68 R+		42.6		30.2				50.8			0.2					COUNTRY Ln RIGHT
HALLELUJAH JUNCTION												300.0				
DRAINAGE QUANTITIES SHEET						22.4									22.4	
GUARDRAIL VEGETATION CONTROL					1514.0	252.3	327.0			1513.8						
SIGN QUANTITIES SHEET	7150															
CONCRETE WALKWAYS						7.6									7.6	
TOTAL	34,992	14,831.2	4647.3	11033.8	6966.3	2315.3	2328.1	47158.4	1663.4	1731.3	185.0	300.0	22.0	22.0	30.0	

* INCLUDES RAMPS

SUMMARY OF QUANTITIES

Q-1

WILL LESLIE — REVISED BY
BYRON STANLEY — DATE REVISED
CALCULATED-DESIGNED BY
CHECKED BY
FUNCTIONAL SUPERVISOR
STEVE TOPAL

STATE OF CALIFORNIA - DEPARTMENT OF TRANSPORTATION
Caltrans
DESIGN

P:\proj1\02\4E420_plans\pse\24e420pa001.dgn

LAST REVISION | DATE PLOTTED => 29-AUG-2016
06-10-16 | TIME PLOTTED => 10:58

Dist	COUNTY	ROUTE	POST MILES TOTAL PROJECT	SHEET No.	TOTAL SHEETS
02	Las, Sie,Las	70, 395	3.5/3.9 R0.0/R3.1,R0.0/R5.6	113	236

REGISTERED CIVIL ENGINEER 06-12-16 DATE

06-15-16
PLANS APPROVAL DATE

REGISTERED PROFESSIONAL ENGINEER BYRON STANLEY No. C60161 Exp. 6-30-18 CIVIL STATE OF CALIFORNIA

THE STATE OF CALIFORNIA OR ITS OFFICERS OR AGENTS SHALL NOT BE RESPONSIBLE FOR THE ACCURACY OR COMPLETENESS OF SCANNED COPIES OF THIS PLAN SHEET.

NOTE:

1. (N) - NOT A SEPARATE PAY ITEM, FOR INFORMATION ONLY.

REPLACE ASPHALT CONCRETE SURFACING QUANTITIES

LOCATION	(N) Approx No. OF DIGOUTS	(N) Ave LENGTH	(N) WIDTH	(N) DEPTH	REPLACE ASPHALT CONCRETE SURFACING	COMMENTS/DESCRIPTION
	EA	LF	LF	LF	CY	
"S1" 9+47.6 TO 127+35	40	100	6	0.33	296.0	Beg PROJECT TO LONG VALLEY UC
"S1" 128+12 TO 179+56	17	100	6	0.33	125.5	LONG VALLEY UC TO EVANS CANYON UC
"S1" 180+28 TO 231+59	17	100	6	0.33	125.5	EVANS CANYON UC TO SCOTT UC
"S1" 232+21 TO 417+22	63	100	6	0.33	466.2	SCOTT UC TO 395/70 Sep
"S1" 418+74 TO 454+31	12	100	6	0.33	88.8	395/70 Sep TO "A1"
"N1" 99+50 TO 215+49	39	100	6	0.33	288.6	Beg PROJECT TO LONG VALLEY UC
"N1" 216+21 TO 266+42	17	100	6	0.33	125.5	LONG VALLEY UC TO EVANS CANYON UC
"N1" 267+17 TO 318+42	17	100	6	0.33	125.5	EVANS CANYON UC TO SCOTT UC
"N1" 319+10 TO 503+68	62	100	6	0.33	458.8	SCOTT UC TO 395/70 Sep
"N1" 505+05 TO 541+32	12	100	6	0.33	88.8	395/70 Sep TO "A1"
"A1" 600+06 TO 612+00	5	100	6	0.33	37.0	177+90 TO 181+15
"B1" 89+50 TO 109+65	7	100	6	0.33	51.8	177+90 TO 181+15
RAMPS	6	100	6	0.33	44.4	RAMPS AT 70/395 INTERCHANGE
				TOTAL	2,322.4	

STORMWATER QUANTITIES

	Temp HYDRAULIC MULCH (BONDED FIBER MATRIX)	Temp CHECK DAM	Temp DRAINAGE INLET PROTECTION	Temp FIBER ROLL	Temp GRAVEL BAG BERM
	SQYD	LF	EA	LF	LF
TOTAL	2100	100	4	2500	45

METAL BEAM GUARD RAILING QUANTITIES

STRUCTURE	BRIDGE APPROACH/ DEPARTURE/ QUADRANT	REMOVE GUARDRAIL	MIDWEST GUARDRAIL SYSTEM (STEEL POST)	MIDWEST GUARDRAIL SYSTEM (9'STEEL POST)	CONTROLLED LOW STRENGTH MATERIAL	TRANSITION RAILING (TYPE WB-31)	END ANCHOR ASSEMBLY (TYPE SFT)	ALTERNATIVE IN-LINE TERMINAL SYSTEM	ALTERNATIVE FLARED TERMINAL SYSTEM	GUARDRAIL VEGETATION CONTROL: HOT MIX ASPHALT (TYPE A)	GUARDRAIL VEGETATION CONTROL: CLASS 2 AGGREGATE BASE	GUARDRAIL VEGETATION CONTROL: PLACE HOT MIX ASPHALT (MISC AREA)	GUARDRAIL VEGETATION CONTROL: IMPORTED BORROW	COMMENTS/DESCRIPTION
		LF	LF	LF	CY	EA	EA	EA	EA	TON	CY	SQYD	CY	
13-0018 L+	APPROACH/NW	64		75	1	1			1	20.2	15.6	93.5	93	SOUTH BOUND LONG VALLEY UC
13-0018 L+	APPROACH/NE	65		75	1	1			1	20.9	16.1	96.6	97	SOUTH BOUND LONG VALLEY UC
13-0018 R+	APPROACH/SW	52		75	1	1			1	21.7	16.7	100.4	100	NORTH BOUND LONG VALLEY UC
13-0018 R+	APPROACH/SE	72		75	1	1			1	19.3	14.9	89.1	89	NORTH BOUND LONG VALLEY UC
07-0072 L+	APPROACH/NW	63		75	1	1			1	20.1	15.5	93.0	93	SOUTH BOUND EVANS CANYON UC
07-0072 L+	APPROACH/NE	64		75	1	1			1	20.9	16.1	96.8	97	SOUTH BOUND EVANS CANYON UC
07-0072 R+	APPROACH/SW	65		75	1	1			1	19.9	15.4	92.1	92	NORTH BOUND EVANS CANYON UC
07-0072 R+	APPROACH/SE	65		75	1	1			1	22.3	17.2	103.2	103	NORTH BOUND EVANS CANYON UC
07-0075 L+	APPROACH/NW	72		75	1	1			1	18.5	14.3	85.6	86	SOUTH BOUND SCOTT UC
07-0075 L+	APPROACH/NE	72		75	1	1			1	21.8	16.8	100.9	101	SOUTH BOUND SCOTT UC
07-0075 R+	APPROACH/SW	65		75	1	1			1	20.1	15.5	93.0	93	NORTH BOUND SCOTT UC
07-0075 R+	APPROACH/SE	70		75	1	1				18.7	14.4	86.4	86	NORTH BOUND SCOTT UC
		153	91				1	1		22.1	17.1	102.4	102	INSPECTION STATION
CMS		116	75		1		1		1	0.0				SR 395 CMS AT INSPECTION STATION
07-0076 L+	APPROACH/NW	85		75	1	1			1	20.0	15.5	92.7	93	SOUTH BOUND SR 70 UC
07-0076 L+	APPROACH/NE	128		75	1	1		1		21.4	16.5	98.9	99	SOUTH BOUND SR 70 UC REDO VEG MAT
07-0076 R+	APPROACH/SW	63		75	1	1		1		0.0				NORTH BOUND SR 70 UC
07-0076 R+	APPROACH/SE	63		75	1	1			1	19.2	14.9	89.1	89	NORTH BOUND SR 70 UC
	TOTAL	1397	166	1200	17	16	2	3	14	* 327.1	* 252.5	* 1513.7	* 1513	

* GUARDRAIL VEGETATION CONTROL QUANTITIES INCLUDED IN ROADWAY QUANTITIES SHEET Q-1

PLACE HOT MIX ASPHALT DIKE

SHEET	TYPE D	TYPE F	DESCRIPTION
	LF	LF	
C-10		56.4	GUARDRAIL DIKE
D-5, D-6	36.0		ASPHALT APRON
TOTAL	36.0	56.4	

CONCRETE WALKWAYS

SHEET	MINOR CONCRETE (Misc CONSTRUCTION)	CLASS 2 AGGREGATE BASE	DESCRIPTION
	CY	CY	
C-12	6.3	6.3	CENSUS WALKWAY
C-14	1.3	1.3	CCTV WALKWAY
TOTAL	7.6*	7.6*	

* INCLUDED ON SUMMARY OF QUANTITIES SHEET Q-1

SUMMARY OF QUANTITIES

Q-2

REVISED BY | DATE REVISED
WILL LESLIE | BYRON STANLEY
CALCULATED-DESIGNED BY | CHECKED BY
FUNCTIONAL SUPERVISOR: STEVE TOPAL
STATE OF CALIFORNIA - DEPARTMENT OF TRANSPORTATION
Caltrans DESIGN

P:\proj1\02\4E420_plans\pse\24e420pa002.dgn

LAST REVISION 06-10-16 | DATE PLOTTED => 28-JUL-2016 | TIME PLOTTED => 13:52

Dist	COUNTY	ROUTE	POST MILES TOTAL PROJECT	SHEET No.	TOTAL SHEETS
02	Las, Sie,Las	70, 395	3.5/3.9 R0.0/R3.1,R0.0/R5.6	114	236

LICENSED LANDSCAPE ARCHITECT

06-15-16
PLANS APPROVAL DATE

LICENSED LANDSCAPE ARCHITECT J. PATRICK SULLIVAN #3125 Signature 07/31/16 Renewal Date 05/23/16 Date STATE OF CALIFORNIA

THE STATE OF CALIFORNIA OR ITS OFFICERS OR AGENTS SHALL NOT BE RESPONSIBLE FOR THE ACCURACY OR COMPLETENESS OF SCANNED COPIES OF THIS PLAN SHEET.

NOTES:

1. FOR ACCURATE RIGHT OF WAY DATA, CONTACT RIGHT OF WAY ENGINEERING AT THE DISTRICT OFFICE.
2. SEE CONSTRUCTION DETAILS FOR ADDITIONAL INFORMATION.
3. UNDERGROUND UTILITIES HAVE NOT BEEN POSITIVELY LOCATED.

LEGEND:

BONDED FIBER MATRIX

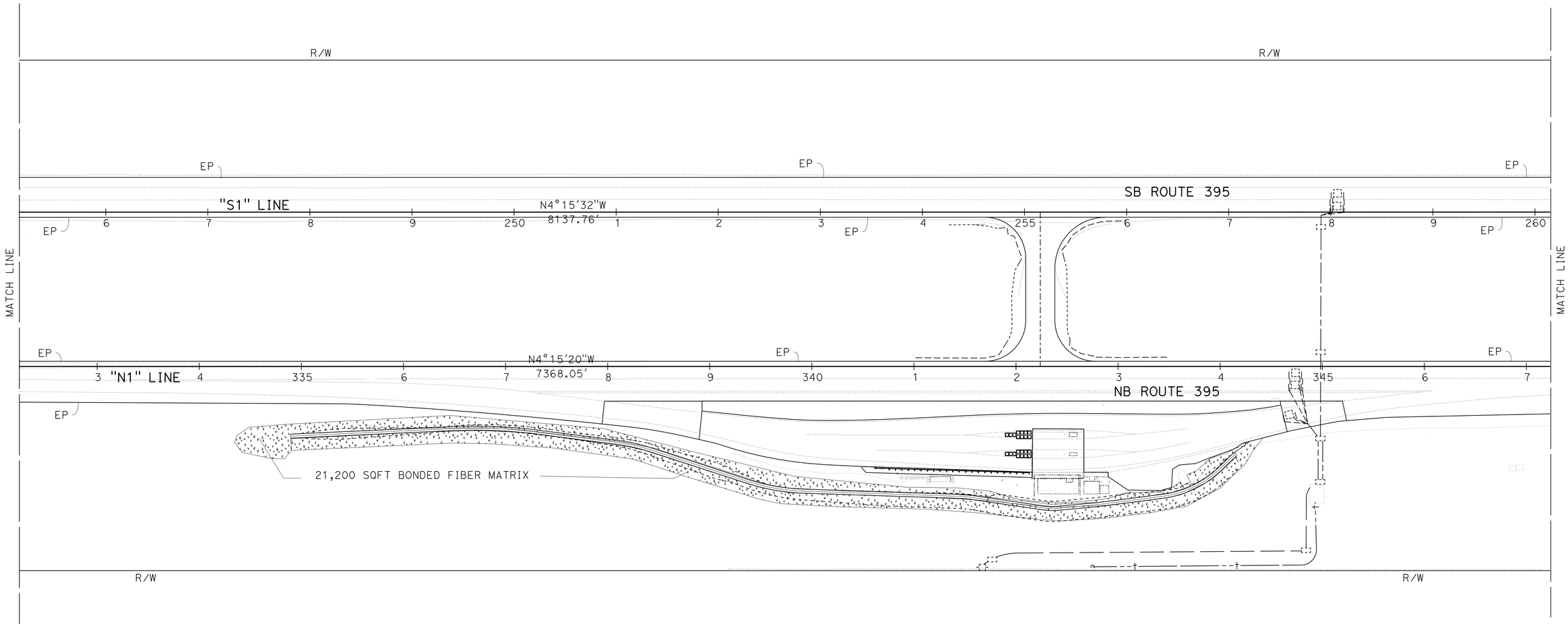

LONG VALLEY INSPECTION STATION

EROSION CONTROL PLAN

SCALE: 1" = 50'

EC-1

APPROVED FOR EROSION CONTROL WORK ONLY

STATE OF CALIFORNIA - DEPARTMENT OF TRANSPORTATION
Caltrans® LANDSCAPE ARCHITECTURE

DESIGN UNIT SENIOR: STEVE THORNE
CALCULATED-DESIGNED BY: J. PATRICK SULLIVAN
CHECKED BY: LOGAN MOORE
REVISED BY / DATE REVISED

P:\proj1\02\4E420_plans\pse\24e420te001.dgn

LAST REVISION 06-10-16 | DATE PLOTTED => 28-JUL-2016 | TIME PLOTTED => 13:52

BORDER LAST REVISED 7/2/2010 | USERNAME => s115152 | DGN FILE => 24e420te001.dgn | RELATIVE BORDER SCALE IS IN INCHES 0 1 2 3 | UNIT 0382 | PROJECT NUMBER & PHASE 02 0002 0283 1

Dist	COUNTY	ROUTE	POST MILES TOTAL PROJECT	SHEET No.	TOTAL SHEETS
02	Las, Sie,Las	70, 395	3.5/3.9 R0.0/R3.1,R0.0/R5.6	115	236

LICENSED LANDSCAPE ARCHITECT

06-15-16
PLANS APPROVAL DATE

LICENSED LANDSCAPE ARCHITECT J. PATRICK SULLIVAN #3125 Signature 07/31/16 Renewal Date 05/23/16 Date STATE OF CALIFORNIA

THE STATE OF CALIFORNIA OR ITS OFFICERS OR AGENTS SHALL NOT BE RESPONSIBLE FOR THE ACCURACY OR COMPLETENESS OF SCANNED COPIES OF THIS PLAN SHEET.

NOTES:

1. FOR ACCURATE RIGHT OF WAY DATA, CONTACT RIGHT OF WAY ENGINEERING AT THE DISTRICT OFFICE.
2. EXISTING UTILITY FACILITIES HAVE NOT BEEN PLOTTED ON THESE PLANS.
3. SEE CONSTRUCTION DETAILS FOR ADDITIONAL INFORMATION.

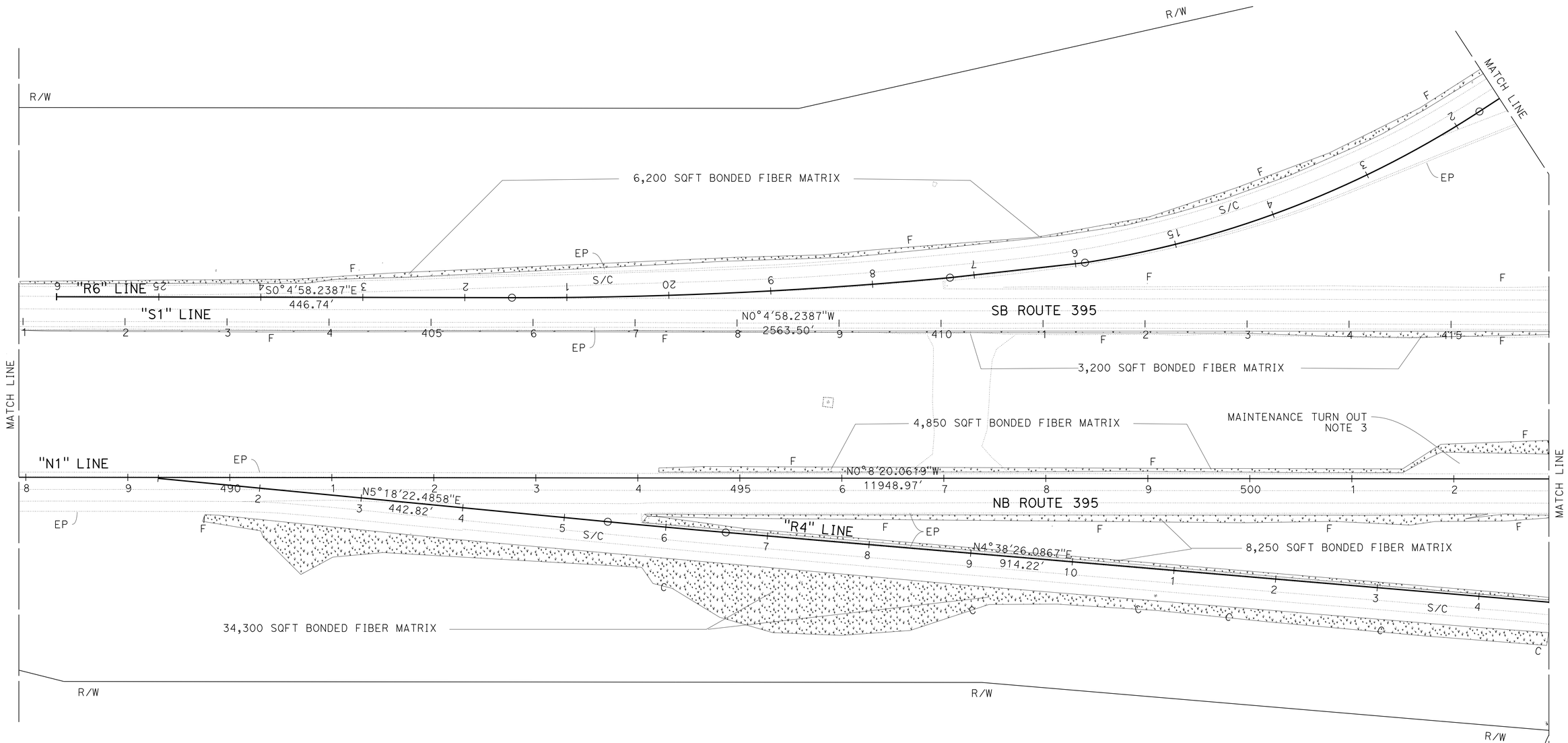

EROSION CONTROL PLAN

SCALE: 1" = 50'

EC-2

APPROVED FOR EROSION CONTROL WORK ONLY

STATE OF CALIFORNIA - DEPARTMENT OF TRANSPORTATION
Caltrans® LANDSCAPE ARCHITECTURE

DESIGN UNIT SENIOR: STEVE THORNE
CALCULATED-DESIGNED BY: J. PATRICK SULLIVAN
CHECKED BY: LOGAN MOORE
REVISED BY / DATE REVISED

P:\proj1\02\4E420_plans\pse\24e420te002.dgn

LAST REVISION 06-10-16
DATE PLOTTED => 28-JUL-2016
TIME PLOTTED => 13:52

Dist	COUNTY	ROUTE	POST MILES TOTAL PROJECT	SHEET No.	TOTAL SHEETS
02	Las, Sie,Las	70, 395	3.5/3.9 R0.0/R3.1,R0.0/R5.6	116	236

LICENSED LANDSCAPE ARCHITECT

06-15-16
PLANS APPROVAL DATE

LICENSED LANDSCAPE ARCHITECT J. PATRICK SULLIVAN #3125 Signature 07/31/16 Renewal Date 05/23/16 Date STATE OF CALIFORNIA

THE STATE OF CALIFORNIA OR ITS OFFICERS OR AGENTS SHALL NOT BE RESPONSIBLE FOR THE ACCURACY OR COMPLETENESS OF SCANNED COPIES OF THIS PLAN SHEET.

NOTES:

1. FOR ACCURATE RIGHT OF WAY DATA, CONTACT RIGHT OF WAY ENGINEERING AT THE DISTRICT OFFICE.
2. EXISTING UTILITY FACILITIES HAVE NOT BEEN PLOTTED ON THESE PLANS.
3. SEE CONSTRUCTION DETAILS FOR ADDITIONAL INFORMATION.

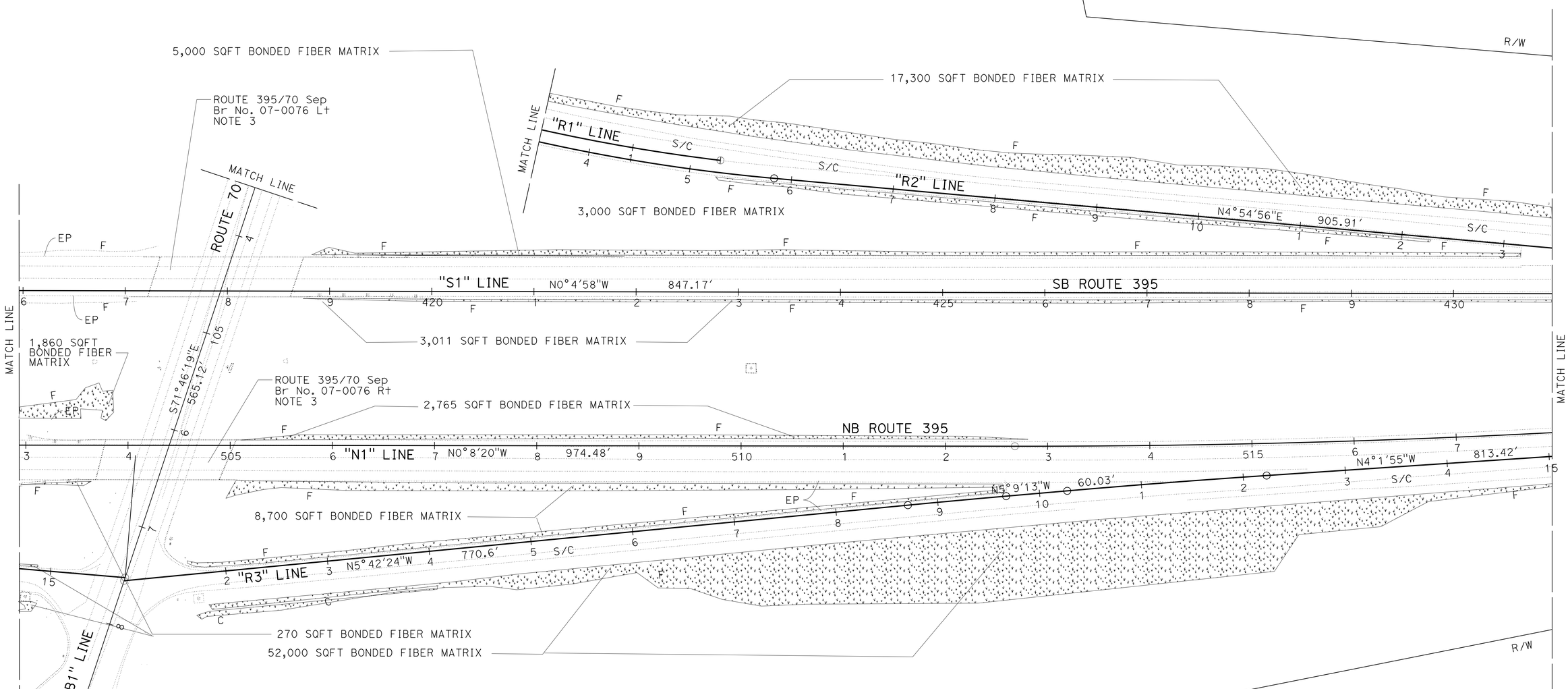

EROSION CONTROL PLAN

SCALE: 1" = 50'

EC-3

APPROVED FOR EROSION CONTROL WORK ONLY

STATE OF CALIFORNIA - DEPARTMENT OF TRANSPORTATION
Caltrans® LANDSCAPE ARCHITECTURE

DESIGN UNIT SENIOR: STEVE THORNE
CALCULATED-DESIGNED BY: J. PATRICK SULLIVAN
CHECKED BY: LOGAN MOORE
REVISED BY / DATE REVISED

P:\proj1\02\4E420_plans\pse\24e420te003.dgn

LAST REVISION: 06-10-16
DATE PLOTTED => 28-JUL-2016
TIME PLOTTED => 13:52

BORDER LAST REVISED 7/2/2010 | USERNAME => s115152 | DGN FILE => 24e420te003.dgn | RELATIVE BORDER SCALE IS IN INCHES 0 1 2 3 | UNIT 0382 | PROJECT NUMBER & PHASE 02 0002 0283 1

Dist	COUNTY	ROUTE	POST MILES TOTAL PROJECT	SHEET No.	TOTAL SHEETS
02	Las, Sie,Las	70, 395	3.5/3.9 R0.0/R3.1,R0.0/R5.6	117	236

LICENSED LANDSCAPE ARCHITECT

06-15-16
PLANS APPROVAL DATE

LICENSED LANDSCAPE ARCHITECT J. PATRICK SULLIVAN #3125 Signature 07/31/16 Renewal Date 05/23/16 Date STATE OF CALIFORNIA

THE STATE OF CALIFORNIA OR ITS OFFICERS OR AGENTS SHALL NOT BE RESPONSIBLE FOR THE ACCURACY OR COMPLETENESS OF SCANNED COPIES OF THIS PLAN SHEET.

NOTES:

1. FOR ACCURATE RIGHT OF WAY DATA, CONTACT RIGHT OF WAY ENGINEERING AT THE DISTRICT OFFICE.
2. EXISTING UTILITY FACILITIES HAVE NOT BEEN PLOTTED ON THESE PLANS.
3. SEE CONSTRUCTION DETAILS FOR ADDITIONAL INFORMATION.

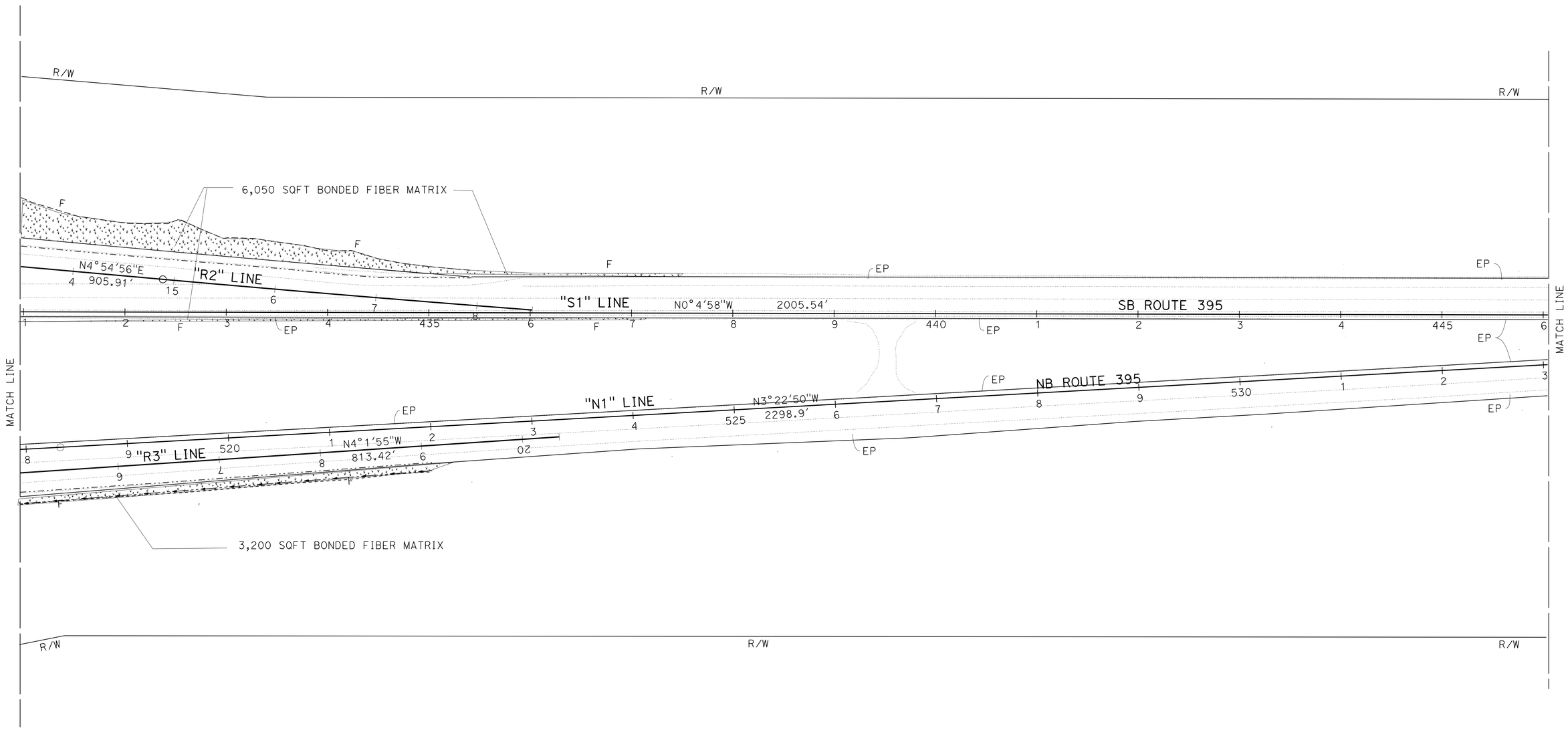

EROSION CONTROL PLAN

SCALE: 1" = 50'

EC-4

APPROVED FOR EROSION CONTROL WORK ONLY

STATE OF CALIFORNIA - DEPARTMENT OF TRANSPORTATION
Caltrans® LANDSCAPE ARCHITECTURE

DESIGN UNIT SENIOR: STEVE THORNE
CALCULATED-DESIGNED BY: J. PATRICK SULLIVAN
CHECKED BY: LOGAN MOORE
REVISED BY / DATE REVISED

P:\proj1\02\4E420_plans\pse\24e420te004.dgn

LAST REVISION 06-10-16 | DATE PLOTTED => 28-JUL-2016 | TIME PLOTTED => 13:52

Dist	COUNTY	ROUTE	POST MILES TOTAL PROJECT	SHEET No.	TOTAL SHEETS
02	Las, Sie,Las	70, 395	3.5/3.9 R0.0/R3.1,R0.0/R5.6	118	236

LICENSED LANDSCAPE ARCHITECT

06-15-16
PLANS APPROVAL DATE

LICENSED LANDSCAPE ARCHITECT #3125 J. PATRICK SULLIVAN Signature 07/31/16 Renewal Date 05/23/16 Date STATE OF CALIFORNIA

THE STATE OF CALIFORNIA OR ITS OFFICERS OR AGENTS SHALL NOT BE RESPONSIBLE FOR THE ACCURACY OR COMPLETENESS OF SCANNED COPIES OF THIS PLAN SHEET.

NOTE:

1. FOR ACCURATE RIGHT OF WAY DATA, CONTACT RIGHT OF WAY ENGINEERING AT THE DISTRICT OFFICE.

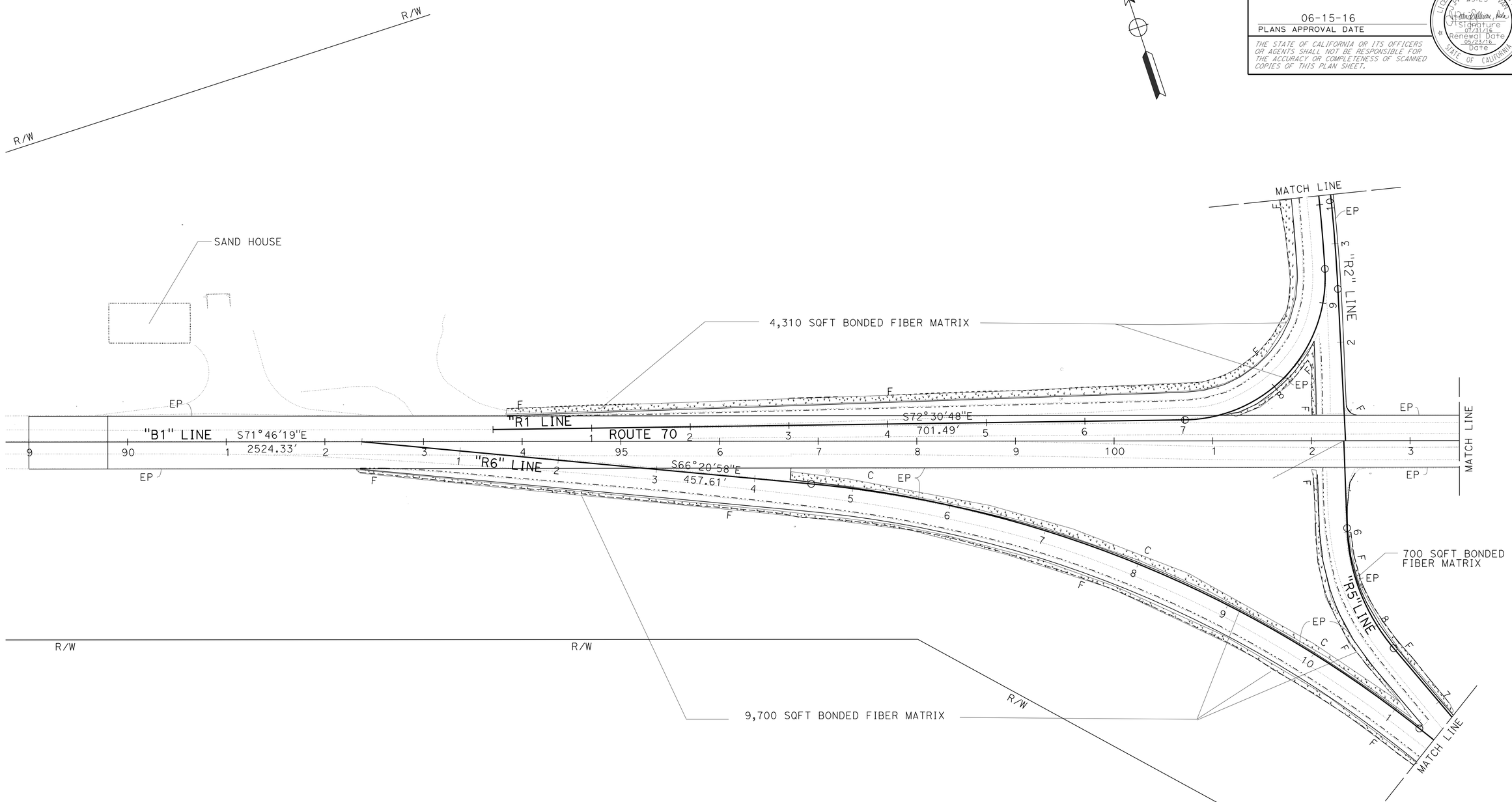

EROSION CONTROL PLAN

SCALE: 1" = 50'

EC-5

APPROVED FOR EROSION CONTROL WORK ONLY

REVISED BY	DATE REVISED

J. PATRICK SULLIVAN	LOGAN MOORE
CALCULATED-DESIGNED BY	CHECKED BY
DESIGN UNIT SENIOR	STEVE THORNE

STATE OF CALIFORNIA - DEPARTMENT OF TRANSPORTATION
Caltrans® LANDSCAPE ARCHITECTURE

P:\proj1\02\4E420_plans\pse\24e420te005.dgn

LAST REVISION 06-10-16 | DATE PLOTTED => 28-JUL-2016 | TIME PLOTTED => 13:52

Dist	COUNTY	ROUTE	POST MILES TOTAL PROJECT	SHEET No.	TOTAL SHEETS
02	Las, Sie,Las	70, 395	3.5/3.9 R0.0/R3.1,R0.0/R5.6	119	236

LICENSED LANDSCAPE ARCHITECT

06-15-16
PLANS APPROVAL DATE

LICENSED LANDSCAPE ARCHITECT J. PATRICK SULLIVAN #3125 Signature 07/31/16 Renewal Date 05/23/16 Date STATE OF CALIFORNIA

THE STATE OF CALIFORNIA OR ITS OFFICERS OR AGENTS SHALL NOT BE RESPONSIBLE FOR THE ACCURACY OR COMPLETENESS OF SCANNED COPIES OF THIS PLAN SHEET.

NOTES:

1. (N) - NOT A SEPARATE PAY ITEM, FOR INFORMATION ONLY
2. REFER TO INDIVIDUAL EC SHEETS FOR LOCATIONS & SLOPE AREA QUANTITIES.
3. TOTAL BONDED FIBER ACREAGE EQUALS 4.3 ACRES FOR ALL AREAS (N)
4. ALL SLOPE SQFT QUANTITIES INCLUDE SLOPE FACTORS.

SEED MIX (N)

BOTANICAL NAME (COMMON NAME)	PERCENT GERMINATION (MINIMUM)	POUNDS PURE LIVE SEED PER ACRE (N) (SLOPE MEASUREMENT)
ACHILLEA MILLEFOLIUM (COMMON YARROW)	50	1
BROMUS CARINATUS (CALIFORNIA BROME)	70	15
ELYMUS ELYMIODES (SQUIREL TAIL WILDRYE)	70	8
ELYMUS GLAUCUS (CALIFORNIA WILDRYE)	70	15
FESTUCA IDAHOENSIS (WESTERN FESCUE)	70	15
HORDEUM VULGARE UC 937 (ANNUAL BARLEY -COVER CROP)	80	20
LOTUS PURSHIANUS (PURSHING)	60	6
LUPINUS BICOLOR (SKY LUPINES)	60	4
VULPIA MICROSTACHYS (SMALL FESCUE)	60	10
	TOTAL	94

BONDED FIBER MATRIX SEQUENCE/APPLICATION RATES (N)

SEQUENCE	ITEM	MATERIAL DESCRIPTION	MATERIAL TYPE	APPLICATION RATE (N)
STEP 1	BONDED FIBER MATRIX	PURE LIVE SEED	MIX	94 LB/ACRE
		FIBER	ALTERNATE	1400 LB/ACRE
		SLOW RELEASE FERTLIZER	GRANULAR (16-16-16)	200 LB/ACRE
STEP 2	BONDED FIBER MATRIX	COMPOST	RECYCLED WOOD PRODUCTS	1.2 CUYDS/ACRE
		FIBER	ALTERNATE	1200 LB/ACRE
STEP 3	BONDED FIBER MATRIX	FIBER	ALTERNATE	1400 LB/ACRE

EROSION CONTROL (BONDED FIBER MATRIX) FOR EACH SHEET TOTALS

SHEET No.	MATERIAL	TOTALS
EC-1	BONDED FIBER MATRIX	21,200
EC-2	BONDED FIBER MATRIX	56,800
EC-3	BONDED FIBER MATRIX	85,206
EC-4	BONDED FIBER MATRIX	9,250
EC-5	BONDED FIBER MATRIX	14,700
	TOTAL SQFT	187,156

BONDED FIBER MATRIX MATERIALS TOTALS

MATERIAL DESCRIPTION	MATERIAL TYPE	TOTALS
PURE LIVE SEED	MIX	404.2 LBS (N)
FIBER	ALTERNATE	17,200 LBS (N)
SLOW RELEASE FERTLIZER	GRANULAR (16-16-16)	860 LBS (N)
COMPOST	RECYCLED WOOD PRODUCTS	5.16 CY (N)

EROSION CONTROL QUANTITIES

ECQ-1

REVISED BY | DATE REVISED
J. PATRICK SULLIVAN | LOGAN MOORE
CALCULATED-DESIGNED BY | CHECKED BY
DESIGN UNIT SENIOR | STEVE THORNE

STATE OF CALIFORNIA - DEPARTMENT OF TRANSPORTATION
Caltrans® LANDSCAPE ARCHITECTURE

P:\proj\02\4E420_plans\pse\24e420tg001.dgn

LAST REVISION 06-10-16 | DATE PLOTTED => 28-JUL-2016 | TIME PLOTTED => 13:52

Dist	COUNTY	ROUTE	POST MILES TOTAL PROJECT	SHEET No.	TOTAL SHEETS
02	Las, Sie,Las	70, 395	3.5/3.9 R0.0/R3.1,R0.0/R5.6	120	236

ART 06-10-16
REGISTERED ELECTRICAL ENGINEER DATE

06-15-16
PLANS APPROVAL DATE

REGISTERED PROFESSIONAL ENGINEER A.P. ROBLES No. E15293 Exp. 3-31-17 ELECTRICAL STATE OF CALIFORNIA

THE STATE OF CALIFORNIA OR ITS OFFICERS OR AGENTS SHALL NOT BE RESPONSIBLE FOR THE ACCURACY OR COMPLETENESS OF SCANNED COPIES OF THIS PLAN SHEET.

NOTE:

1. FOR ACCURATE RIGHT OF WAY DATA, CONTACT RIGHT OF WAY ENGINEERING AT THE DISTRICT OFFICE.

LEGEND:

EXISTING AXLE SENSOR
AXLE SENSOR

ABBREVIATIONS;

ITS	INTELLIGENT TRANSPORTATION SYSTEM
Cab	CABINET
TC	TELEPHONE CABLE
STC	SCREENED TRANSMISSION CABLE
PSREC	PLUMAS-SIERRA RURAL ELECTRIC COOPERATIVE

LEGEND (THIS SHEET):

1 RS LED Lum.

2 RC Exist Lum. INSTALL LED Lum (ROADWAY 2).

3 LED Lum (ROADWAY 2).

4 1½" C, 2#8, 1#8 G.

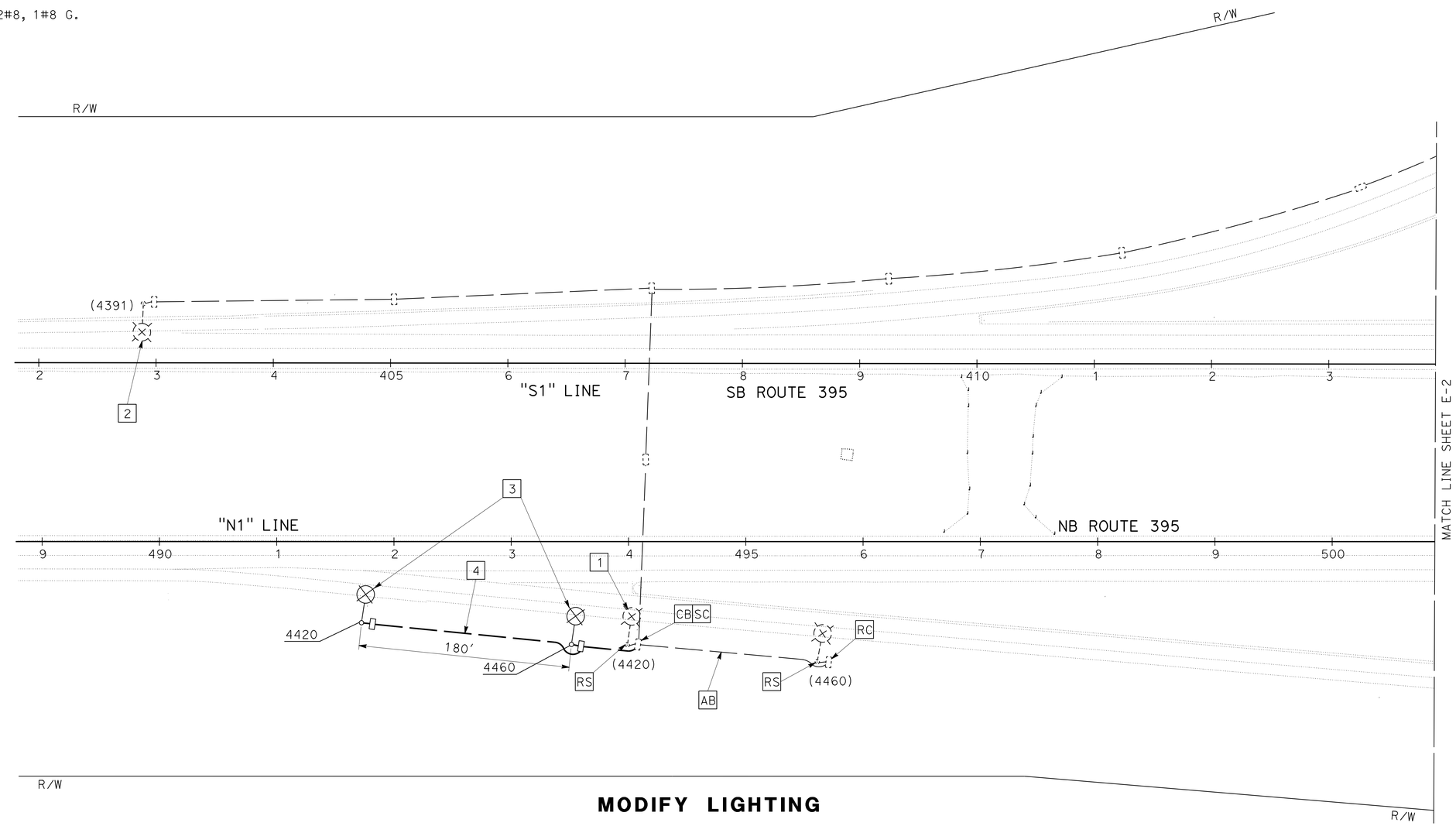

MODIFY LIGHTING

APPROVED FOR ELECTRICAL WORK ONLY

MODIFYING EXISTING ELECTRICAL SYSTEMS

SCALE: 1" = 50'

E-1

REVISED BY | DATE REVISED
ARTURO P. ROBLES | JIM HANNIGAN
CALCULATED-DESIGNED BY | CHECKED BY
FUNCTIONAL SUPERVISOR: ROB STINGER

STATE OF CALIFORNIA - DEPARTMENT OF TRANSPORTATION
Caltrans® ELECTRICAL DESIGN

P:\proj1\02\4E420_plans\pse\24e420ua001.dgn

LAST REVISION 06-10-16 | DATE PLOTTED => 28-JUL-2016 | TIME PLOTTED => 13:52

Dist	COUNTY	ROUTE	POST MILES TOTAL PROJECT	SHEET No.	TOTAL SHEETS
02	Las, Sie,Las	70, 395	3.5/3.9 R0.0/R3.1,R0.0/R5.6	121	236

REGISTERED ELECTRICAL ENGINEER 06-10-16 DATE

06-15-16
PLANS APPROVAL DATE

REGISTERED PROFESSIONAL ENGINEER A.P. ROBLES No. E15293 Exp. 3-31-17 ELECTRICAL STATE OF CALIFORNIA

THE STATE OF CALIFORNIA OR ITS OFFICERS OR AGENTS SHALL NOT BE RESPONSIBLE FOR THE ACCURACY OR COMPLETENESS OF SCANNED COPIES OF THIS PLAN SHEET.

NOTE:

1. FOR ACCURATE RIGHT OF WAY DATA, CONTACT RIGHT OF WAY ENGINEERING AT THE DISTRICT OFFICE.

LEGEND (THIS SHEET):

1 RC Exist Lum. INSTALL LED Lum (ROADWAY 2).

2 RC Exist Lum. INSTALL LED Lum (ROADWAY 1).

3 RC Exist SIGN LIGHTING FIXTURE.

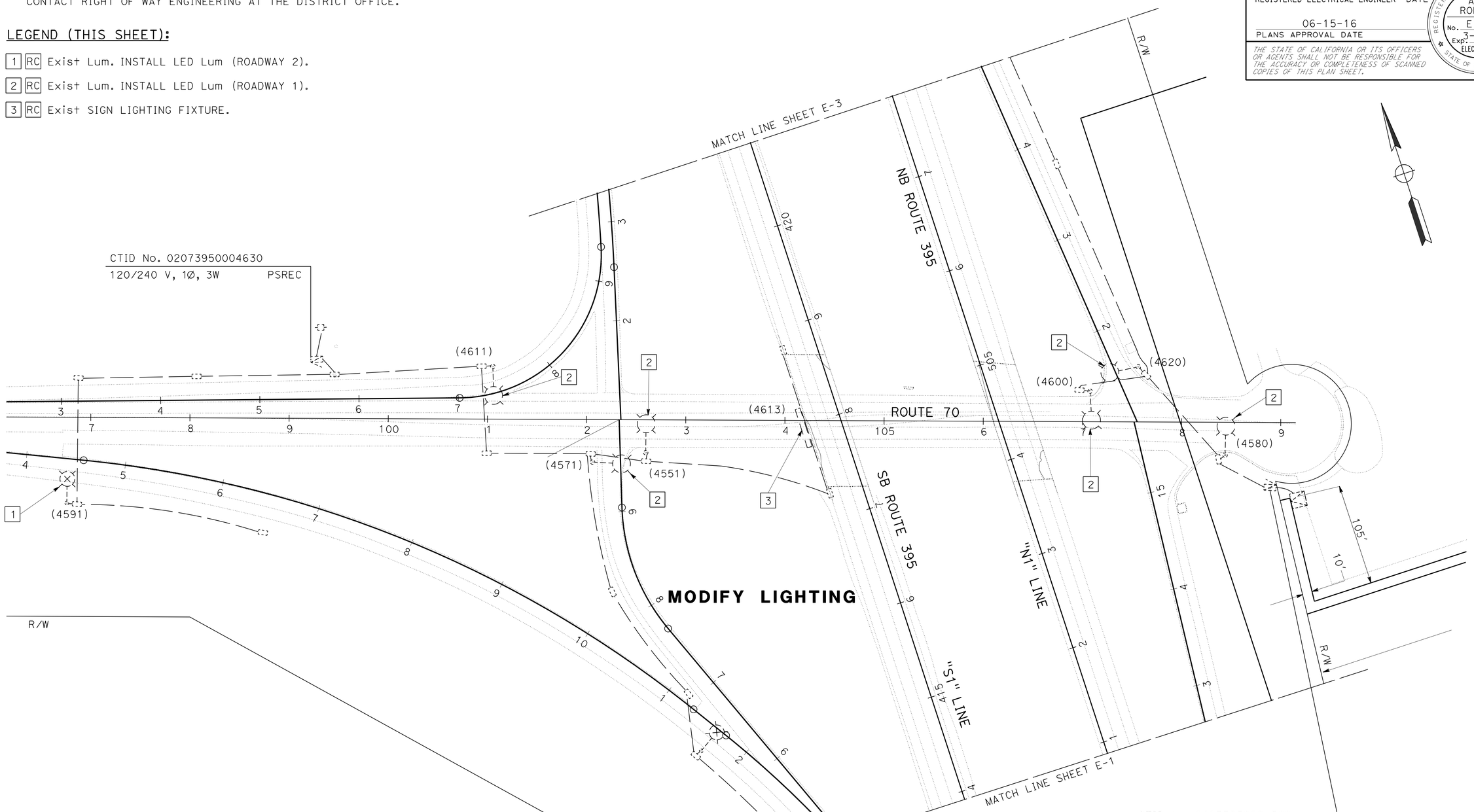

MODIFYING EXISTING ELECTRICAL SYSTEMS

SCALE: 1" = 50'

E-2

APPROVED FOR ELECTRICAL WORK ONLY

STATE OF CALIFORNIA - DEPARTMENT OF TRANSPORTATION
Caltrans® ELECTRICAL DESIGN

FUNCTIONAL SUPERVISOR: ROB STINGER
CALCULATED-DESIGNED BY: ARTURO P. ROBLES
CHECKED BY: JIM HANNIGAN
REVISED BY / DATE REVISED

P:\proj1\02\4E420_plans\pse\24e420ua002.dgn

LAST REVISION 06-10-16 | DATE PLOTTED => 28-JUL-2016 | TIME PLOTTED => 13:52

BORDER LAST REVISED 7/2/2010 | USERNAME => s115152 | DGN FILE => 24e420ua002.dgn | RELATIVE BORDER SCALE IS IN INCHES 0 1 2 3 | UNIT 0147 | PROJECT NUMBER & PHASE 02 0002 0283 1

Dist	COUNTY	ROUTE	POST MILES TOTAL PROJECT	SHEET No.	TOTAL SHEETS
02	Las, Sie,Las	70, 395	3.5/3.9 R0.0/R3.1,R0.0/R5.6	122	236

REGISTERED ELECTRICAL ENGINEER 06-10-16 DATE

06-15-16
PLANS APPROVAL DATE

REGISTERED PROFESSIONAL ENGINEER A.P. ROBLES No. E15293 Exp. 3-31-17 ELECTRICAL STATE OF CALIFORNIA

THE STATE OF CALIFORNIA OR ITS OFFICERS OR AGENTS SHALL NOT BE RESPONSIBLE FOR THE ACCURACY OR COMPLETENESS OF SCANNED COPIES OF THIS PLAN SHEET.

NOTE:

1. FOR ACCURATE RIGHT OF WAY DATA, CONTACT RIGHT OF WAY ENGINEERING AT THE DISTRICT OFFICE.

LEGEND (THIS SHEET):

1 LED Lum (ROADWAY 2) TO REMAIN.

2 LED Lum (ROADWAY 2).

3 1½"C, 2#8, 1#8 G.

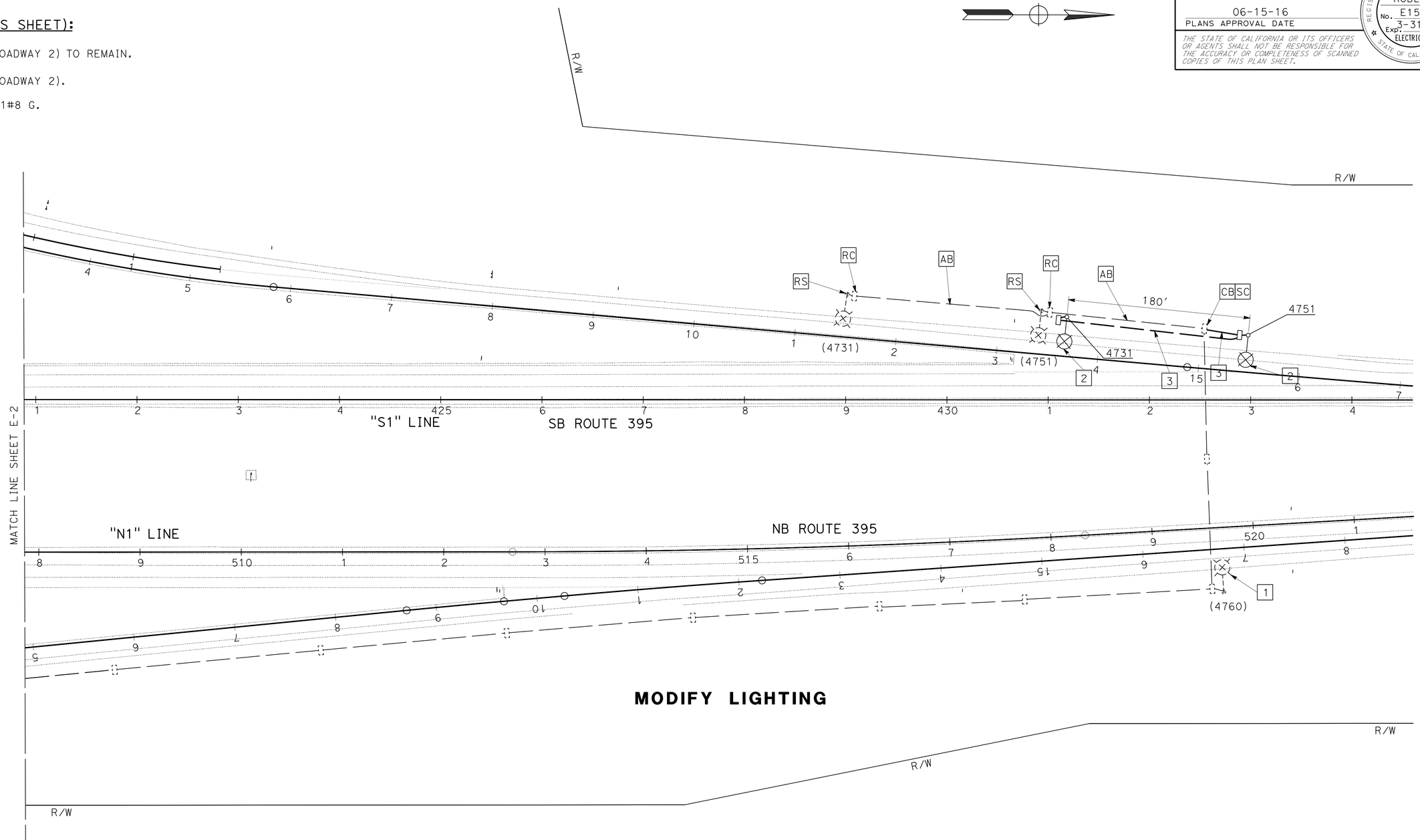

MODIFY LIGHTING

MODIFYING EXISTING ELECTRICAL SYSTEMS

SCALE: 1" = 50'

E-3

APPROVED FOR ELECTRICAL WORK ONLY

STATE OF CALIFORNIA - DEPARTMENT OF TRANSPORTATION
Caltrans® ELECTRICAL DESIGN

FUNCTIONAL SUPERVISOR: ROB STINGER
CALCULATED-DESIGNED BY: ARTURO P. ROBLES
CHECKED BY: JIM HANNIGAN
REVISED BY / DATE REVISED

P:\proj\02\4E420_plans\pse\24e420ua003.dgn

LAST REVISION 06-10-16 | DATE PLOTTED => 28-JUL-2016 | TIME PLOTTED => 13:52

BORDER LAST REVISED 7/2/2010 | USERNAME => s115152 | DGN FILE => 24e420ua003.dgn | RELATIVE BORDER SCALE IS IN INCHES 0 1 2 3 | UNIT 0147 | PROJECT NUMBER & PHASE 02 0002 0283 1

Dist	COUNTY	ROUTE	POST MILES TOTAL PROJECT	SHEET No.	TOTAL SHEETS
02	Las, Sie,Las	70, 395	3.5/3.9 R0.0/R3.1,R0.0/R5.6	123	236

ART 06-10-16
REGISTERED ELECTRICAL ENGINEER DATE

06-15-16
PLANS APPROVAL DATE

REGISTERED PROFESSIONAL ENGINEER A.P. ROBLES No. E15293 Exp. 3-31-17 ELECTRICAL STATE OF CALIFORNIA

THE STATE OF CALIFORNIA OR ITS OFFICERS OR AGENTS SHALL NOT BE RESPONSIBLE FOR THE ACCURACY OR COMPLETENESS OF SCANNED COPIES OF THIS PLAN SHEET.

NOTES:

1. FOR ACCURATE RIGHT OF WAY DATA, CONTACT RIGHT OF WAY ENGINEERING AT THE DISTRICT OFFICE.
2. SEE SHEET E-7 FOR AXLE SENSOR INSTALLATION DETAIL.

LEGEND (THIS SHEET):

1. 3" SCHEDULE 40 PVC CONDUIT, 48" DEEP, WITH SCHEDULE 80 PVC 36" SWEEPS. INSTALL PT.
2. 2" C, 2#8, 1#8 G.
3. 2-3"C, 8 DLC, 4 STC.
4. 2"C, 8 DLC, 4 STC.
5. 2"C, 4 DLC, 2 STC.
6. TYPE III-AF SERVICE EQUIPMENT ENCLOSURE. SEE SHEET E-9 FOR WIRING DIAGRAM.
7. RELOCATED TRAFFIC MONITORING STATION Cab. SEE SHEET E-9.

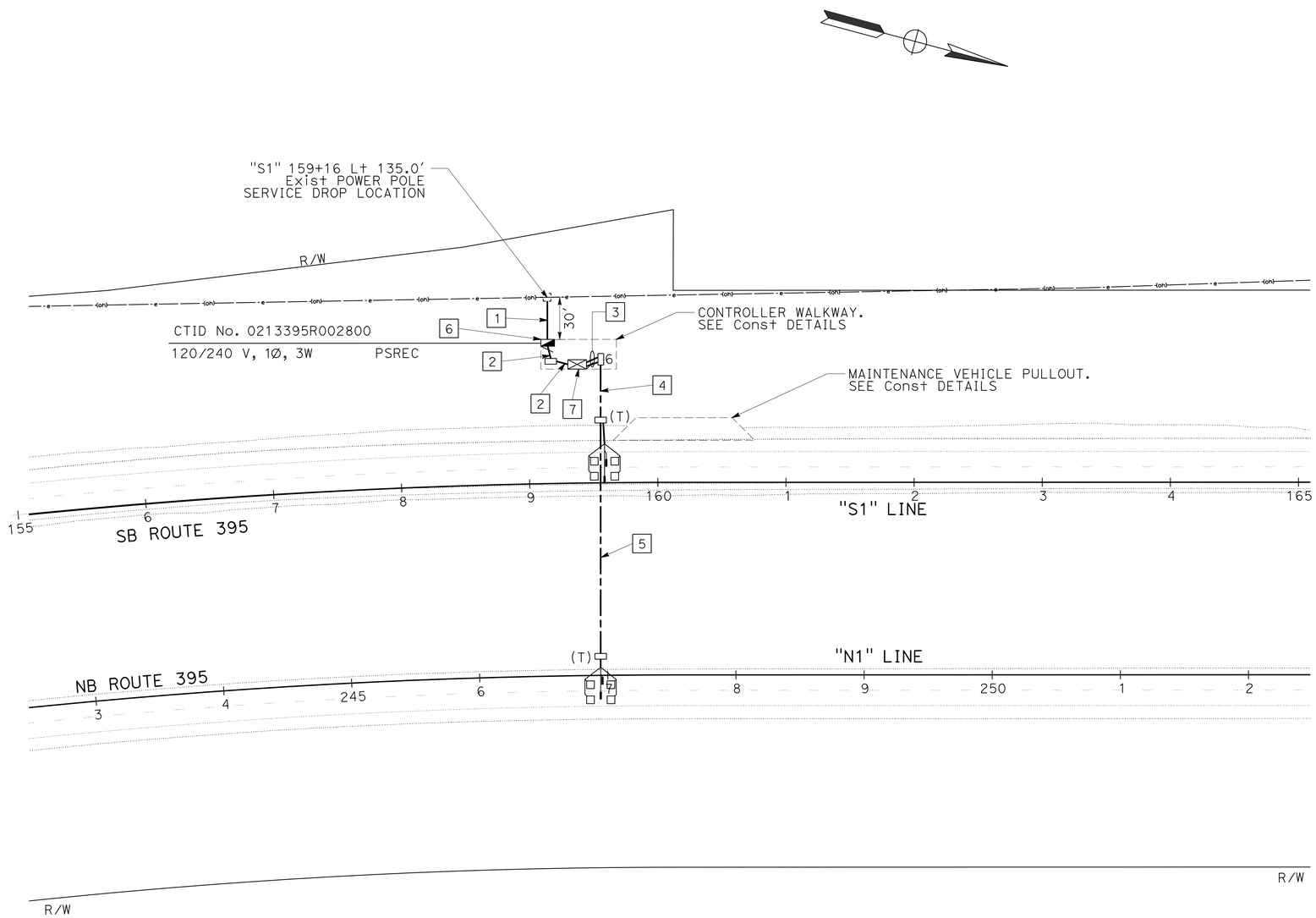

TCS NO. 215
PM 2.80

TRAFFIC MONITORING STATION SYSTEM

SCALE: 1" = 50'

E-4

APPROVED FOR ELECTRICAL WORK ONLY

REVISED BY | DATE REVISED
ARTURO P. ROBLES | KAREN LAW
CALCULATED-DESIGNED BY | CHECKED BY
FUNCTIONAL SUPERVISOR: ROB STINGER

STATE OF CALIFORNIA - DEPARTMENT OF TRANSPORTATION
Caltrans® ELECTRICAL DESIGN

P:\proj1\02\4E420_plans\pse\24e420ua004.dgn

LAST REVISION 06-10-16 | DATE PLOTTED => 28-JUL-2016 TIME PLOTTED => 13:52

BORDER LAST REVISED 7/2/2010 | USERNAME => s115152 DGN FILE => 24e420ua004.dgn | RELATIVE BORDER SCALE IS IN INCHES 0 1 2 3 | UNIT 0147 | PROJECT NUMBER & PHASE 02 0002 0283 1

Dist	COUNTY	ROUTE	POST MILES TOTAL PROJECT	SHEET No.	TOTAL SHEETS
02	Las, Sie,Las	70, 395	3.5/3.9 R0.0/R3.1,R0.0/R5.6	124	236

ART 06-10-16
REGISTERED ELECTRICAL ENGINEER DATE

06-15-16
PLANS APPROVAL DATE

REGISTERED PROFESSIONAL ENGINEER A.P. ROBLES No. E15293 Exp. 3-31-17 ELECTRICAL STATE OF CALIFORNIA

THE STATE OF CALIFORNIA OR ITS OFFICERS OR AGENTS SHALL NOT BE RESPONSIBLE FOR THE ACCURACY OR COMPLETENESS OF SCANNED COPIES OF THIS PLAN SHEET.

NOTE:

1. FOR ACCURATE RIGHT OF WAY DATA, CONTACT RIGHT OF WAY ENGINEERING AT THE DISTRICT OFFICE.

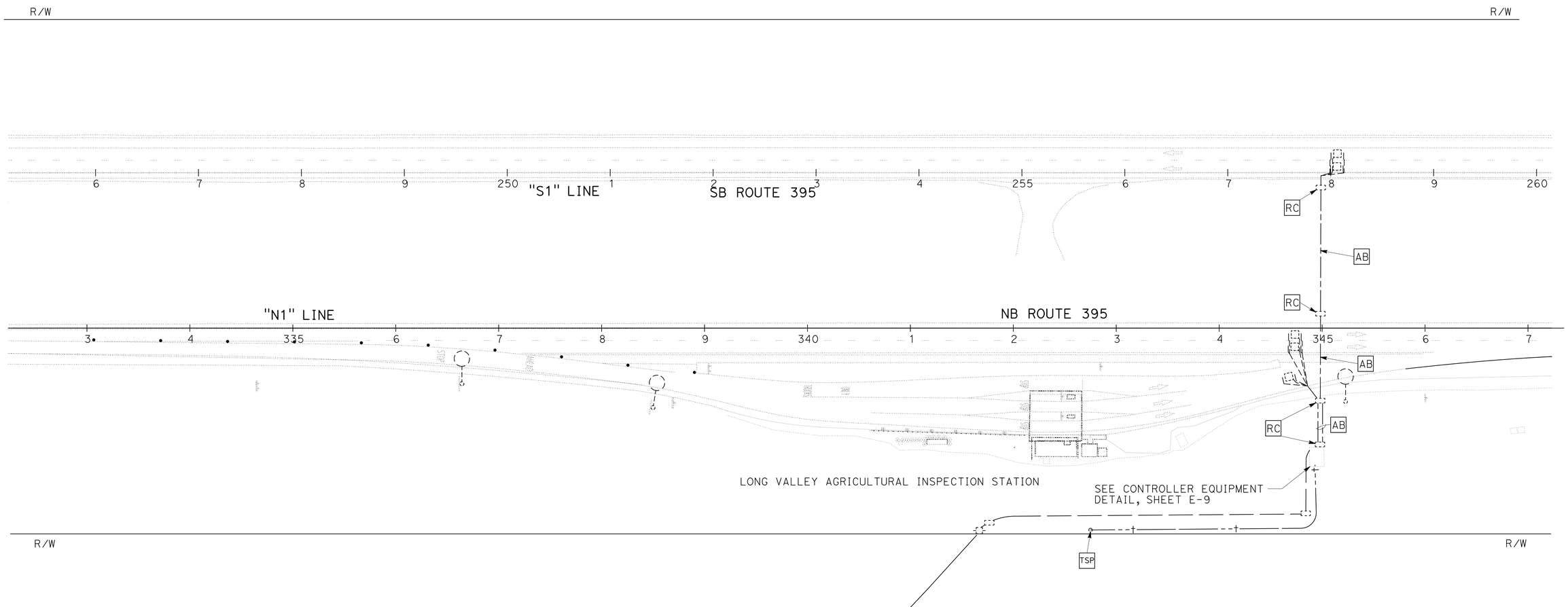

TRAFFIC MONITORING STATION SYSTEM

SCALE: 1" = 50'

E-5

APPROVED FOR ELECTRICAL WORK ONLY

REVISED BY	DATE REVISED

CALCULATED-DESIGNED BY: ARTURO P. ROBLES
CHECKED BY: KAREN LAW
FUNCTIONAL SUPERVISOR: ROB STINGER

STATE OF CALIFORNIA - DEPARTMENT OF TRANSPORTATION
Caltrans® ELECTRICAL DESIGN

P:\proj1\02\4E420_plans\pse\24e420ua005.dgn

LAST REVISION 06-10-16
DATE PLOTTED => 28-JUL-2016
TIME PLOTTED => 13:52

Dist	COUNTY	ROUTE	POST MILES TOTAL PROJECT	SHEET No.	TOTAL SHEETS
02	Las, Sie,Las	70, 395	3.5/3.9 R0.0/R3.1,R0.0/R5.6	125	236

ART 06-10-16
REGISTERED ELECTRICAL ENGINEER DATE

06-15-16
PLANS APPROVAL DATE

REGISTERED PROFESSIONAL ENGINEER A.P. ROBLES No. E15293 Exp. 3-31-17 ELECTRICAL STATE OF CALIFORNIA

THE STATE OF CALIFORNIA OR ITS OFFICERS OR AGENTS SHALL NOT BE RESPONSIBLE FOR THE ACCURACY OR COMPLETENESS OF SCANNED COPIES OF THIS PLAN SHEET.

NOTE:

1. FOR ACCURATE RIGHT OF WAY DATA, CONTACT RIGHT OF WAY ENGINEERING AT THE DISTRICT OFFICE.

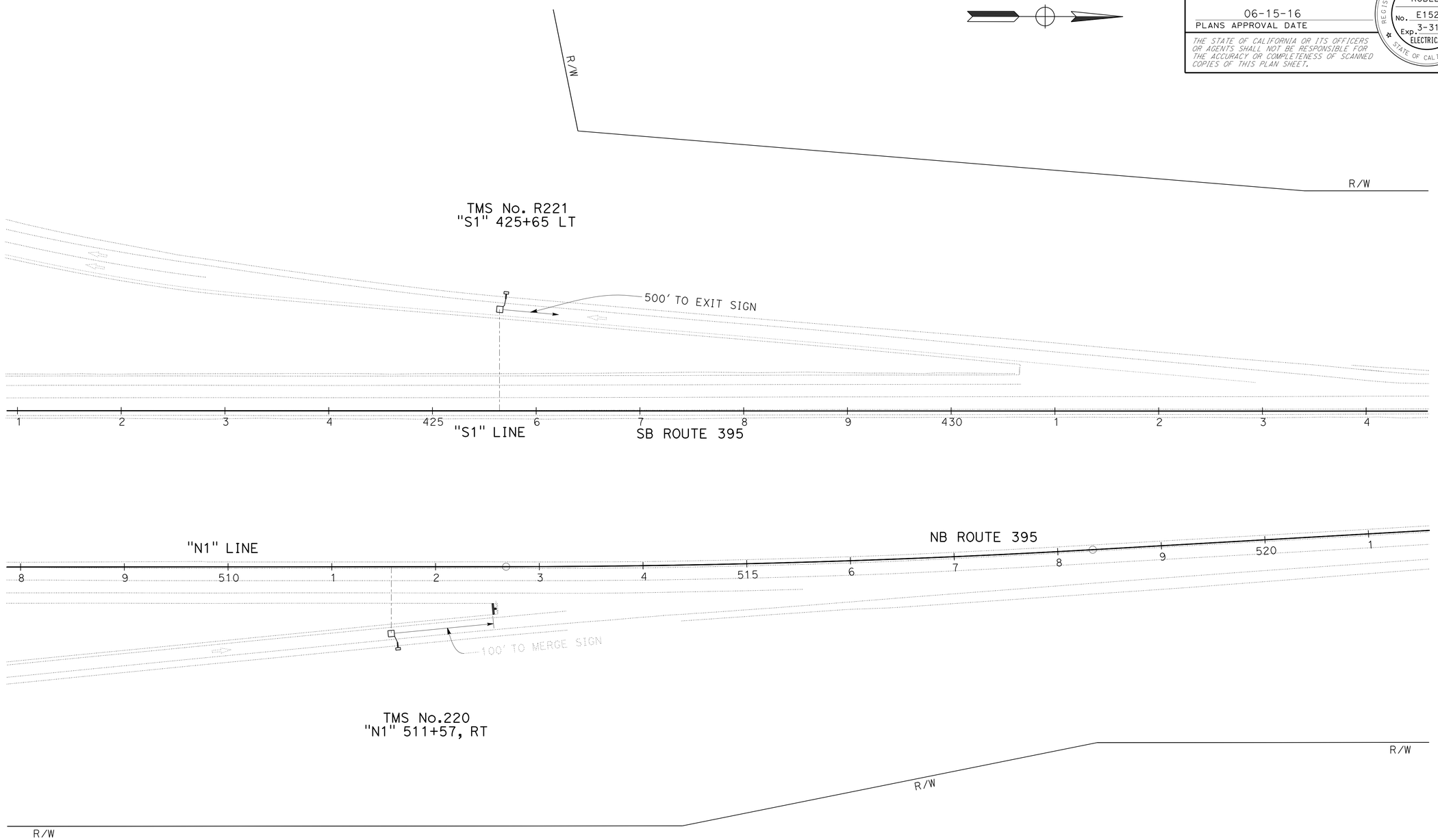

TRAFFIC MONITORING STATION SYSTEM

SCALE: 1" = 50'

E-6

APPROVED FOR ELECTRICAL WORK ONLY

STATE OF CALIFORNIA - DEPARTMENT OF TRANSPORTATION
Caltrans® ELECTRICAL DESIGN

FUNCTIONAL SUPERVISOR: ROB STINGER
CALCULATED-DESIGNED BY: ARTURO P. ROBLES
CHECKED BY: KAREN LAW
REVISED BY
DATE REVISED

P:\proj1\02\4E420_plans\pse\24e420ua006.dgn

LAST REVISION 06-10-16
DATE PLOTTED => 28-JUL-2016
TIME PLOTTED => 13:52

BORDER LAST REVISED 7/2/2010
USERNAME => s115152
DGN FILE => 24e420ua006.dgn
RELATIVE BORDER SCALE IS IN INCHES 0 1 2 3
UNIT 0147
PROJECT NUMBER & PHASE 02 0002 0283 1

Dist	COUNTY	ROUTE	POST MILES TOTAL PROJECT	SHEET No.	TOTAL SHEETS
02	Las, Sie,Las	70, 395	3.5/3.9 R0.0/R3.1,R0.0/R5.6	126	236

ART 06-10-16
REGISTERED ELECTRICAL ENGINEER DATE

06-15-16
PLANS APPROVAL DATE

REGISTERED PROFESSIONAL ENGINEER A.P. ROBLES No. E15293 Exp. 3-31-17 ELECTRICAL STATE OF CALIFORNIA

THE STATE OF CALIFORNIA OR ITS OFFICERS OR AGENTS SHALL NOT BE RESPONSIBLE FOR THE ACCURACY OR COMPLETENESS OF SCANNED COPIES OF THIS PLAN SHEET.

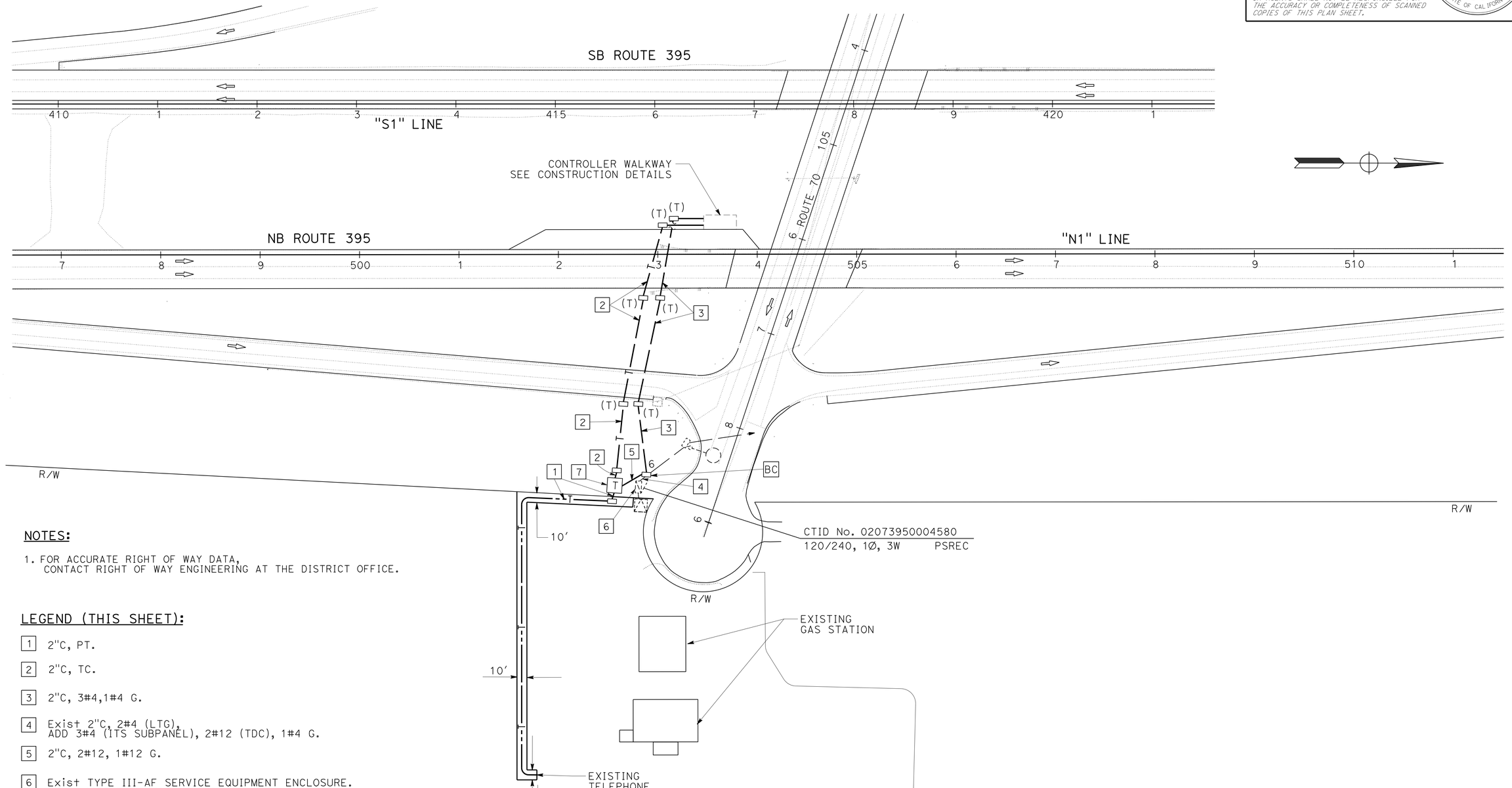

NOTES:

1. FOR ACCURATE RIGHT OF WAY DATA, CONTACT RIGHT OF WAY ENGINEERING AT THE DISTRICT OFFICE.

LEGEND (THIS SHEET):

1. 2"C, PT.
2. 2"C, TC.
3. 2"C, 3#4,1#4 G.
4. Exist 2"C, 2#4 (LTG), ADD 3#4 (ITS SUBPANEL), 2#12 (TDC), 1#4 G.
5. 2"C, 2#12, 1#12 G.
6. Exist TYPE III-AF SERVICE EQUIPMENT ENCLOSURE. SEE SHEET E-10 FOR WIRING DIAGRAM.
7. TYPE B TDC.

APPROVED FOR ELECTRICAL WORK ONLY

CLOSED CIRCUIT TELEVISION SYSTEM

SCALE: 1" = 50′

E-7

REVISED BY	DATE REVISED

CALCULATED-DESIGNED BY	CHECKED BY
ARTURO P. ROBLES	JIM HANNIGAN

FUNCTIONAL SUPERVISOR: ROB STINGER

STATE OF CALIFORNIA - DEPARTMENT OF TRANSPORTATION
Caltrans® ELECTRICAL DESIGN

P:\proj1\02\4E420_plans\pse\24e420ua007.dgn

LAST REVISION 06-10-16 | DATE PLOTTED => 28-JUL-2016 | TIME PLOTTED => 13:52

Dist	COUNTY	ROUTE	POST MILES TOTAL PROJECT	SHEET No.	TOTAL SHEETS
02	Las, Sie,Las	70, 395	3.5/3.9 R0.0/R3.1,R0.0/R5.6	127	236

ART 06-10-16
REGISTERED ELECTRICAL ENGINEER DATE

06-15-16
PLANS APPROVAL DATE

REGISTERED PROFESSIONAL ENGINEER A.P. ROBLES No. E15293 Exp. 3-31-17 ELECTRICAL STATE OF CALIFORNIA

THE STATE OF CALIFORNIA OR ITS OFFICERS OR AGENTS SHALL NOT BE RESPONSIBLE FOR THE ACCURACY OR COMPLETENESS OF SCANNED COPIES OF THIS PLAN SHEET.

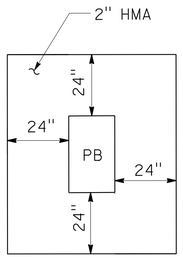

PULL BOX PAVING

FOR ALL PULL BOXES IN UNPAVED AREAS

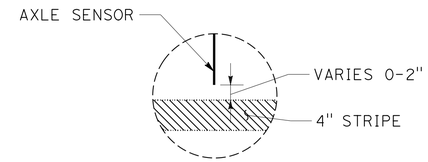

DETAIL A

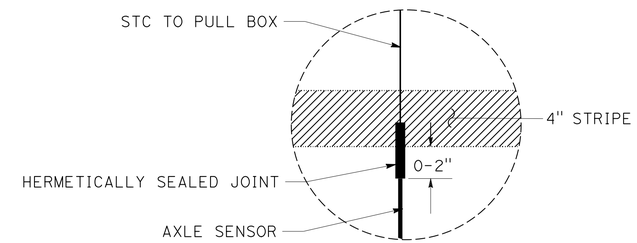

DETAIL B

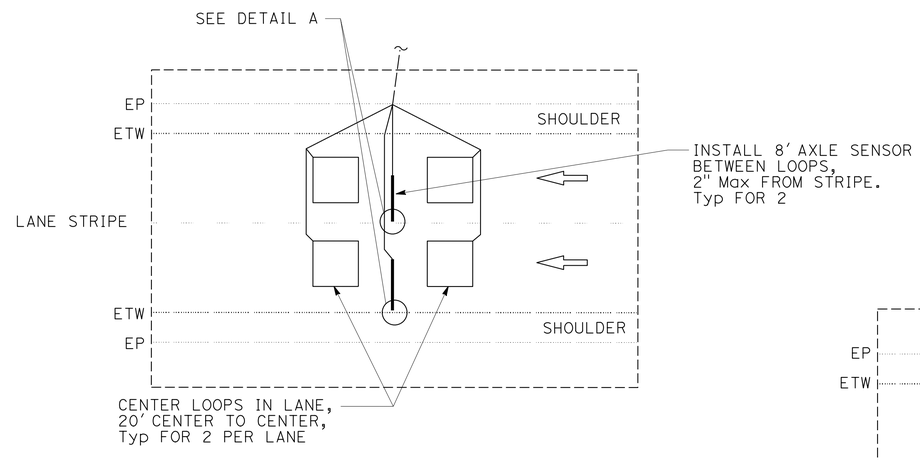

SOUTHBOUND ROUTE 395

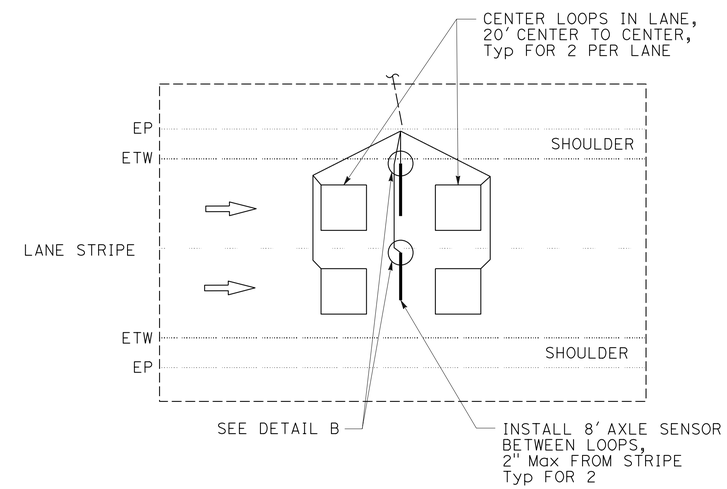

NORTHBOUND ROUTE 395

AXLE SENSOR INSTALLATION

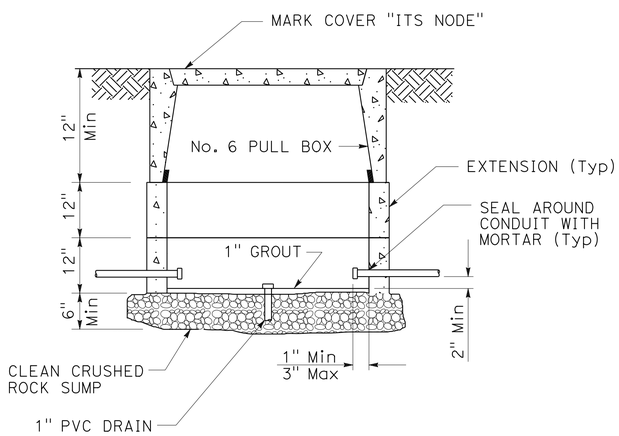

ITS NODE PULL BOX

ELECTRICAL DETAILS

NO SCALE

E-8

REVISED BY	DATE REVISED
ARTURO P. ROBLES	JIM HANNIGAN

CALCULATED-DESIGNED BY / CHECKED BY

FUNCTIONAL SUPERVISOR: ROB STINGER

STATE OF CALIFORNIA - DEPARTMENT OF TRANSPORTATION
Caltrans® ELECTRICAL DESIGN

P:\proj1\02\4E420_plans\pse\24e420ua008.dgn

LAST REVISION 06-10-16 | DATE PLOTTED => 28-JUL-2016 | TIME PLOTTED => 13:52

Dist	COUNTY	ROUTE	POST MILES TOTAL PROJECT	SHEET No.	TOTAL SHEETS
02	Las, Sie,Las	70, 395	3.5/3.9 R0.0/R3.1,R0.0/R5.6	128	236

ART 06-10-16
REGISTERED ELECTRICAL ENGINEER DATE

06-15-16
PLANS APPROVAL DATE

REGISTERED PROFESSIONAL ENGINEER A.P. ROBLES No. E15293 Exp. 3-31-17 ELECTRICAL STATE OF CALIFORNIA

THE STATE OF CALIFORNIA OR ITS OFFICERS OR AGENTS SHALL NOT BE RESPONSIBLE FOR THE ACCURACY OR COMPLETENESS OF SCANNED COPIES OF THIS PLAN SHEET.

LEGEND (THIS SHEET):

1. Exist 2"C, 3#1 (SUBPANEL), 2#8 (HAR), 2#8 (TCS), 2#12 (TDC), 1#1 G. REMOVE 2#8 (TCS).
2. Exist 2"C, 3#1 (SUBPANEL), 2#8 (HAR), 2#8 (TCS), 1#1 G. REMOVE 2#8 (TCS).
3. Exist 2"C, 4 TC. REMOVE 1 TC.
4. Exist 2"C, 2 TC (CMS AND FB).
5. 2"C, 2#12, 1#8 G.
6. 2"C, 2#12, 1#12 G.
7. 2"C, PT.
8. 3"C (TYPE 1), PT.
9. 2"C, PT.
10. STUB CONDUIT UP THROUGH FOUNDATION AND CAP FOR FUTURE USE.
11. FA AND REPAIR WALKWAY.
12. ITS SUBPANEL-TYPE III-AF SERVICE EQUIPMENT ENCLOSURE WITHOUT METERING SECTION. SEE SHEET E-10 FOR WIRING DIAGRAM.
13. 4"C (TYPE 1), PT.

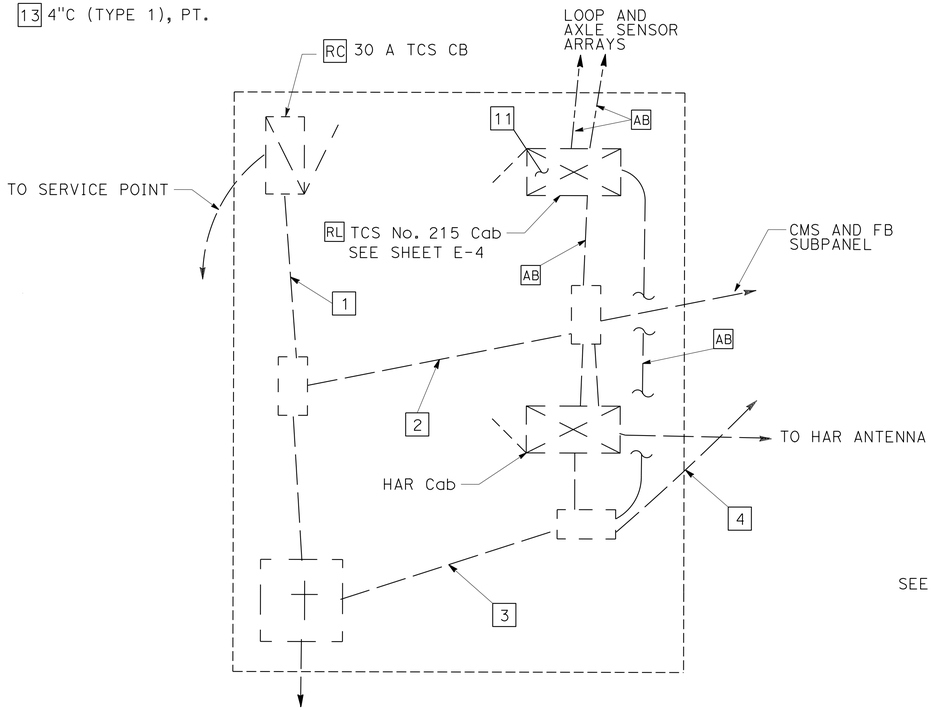

EXISTING ELECTRICAL EQUIPMENT AT AGRICULTURAL INSPECTION STATION

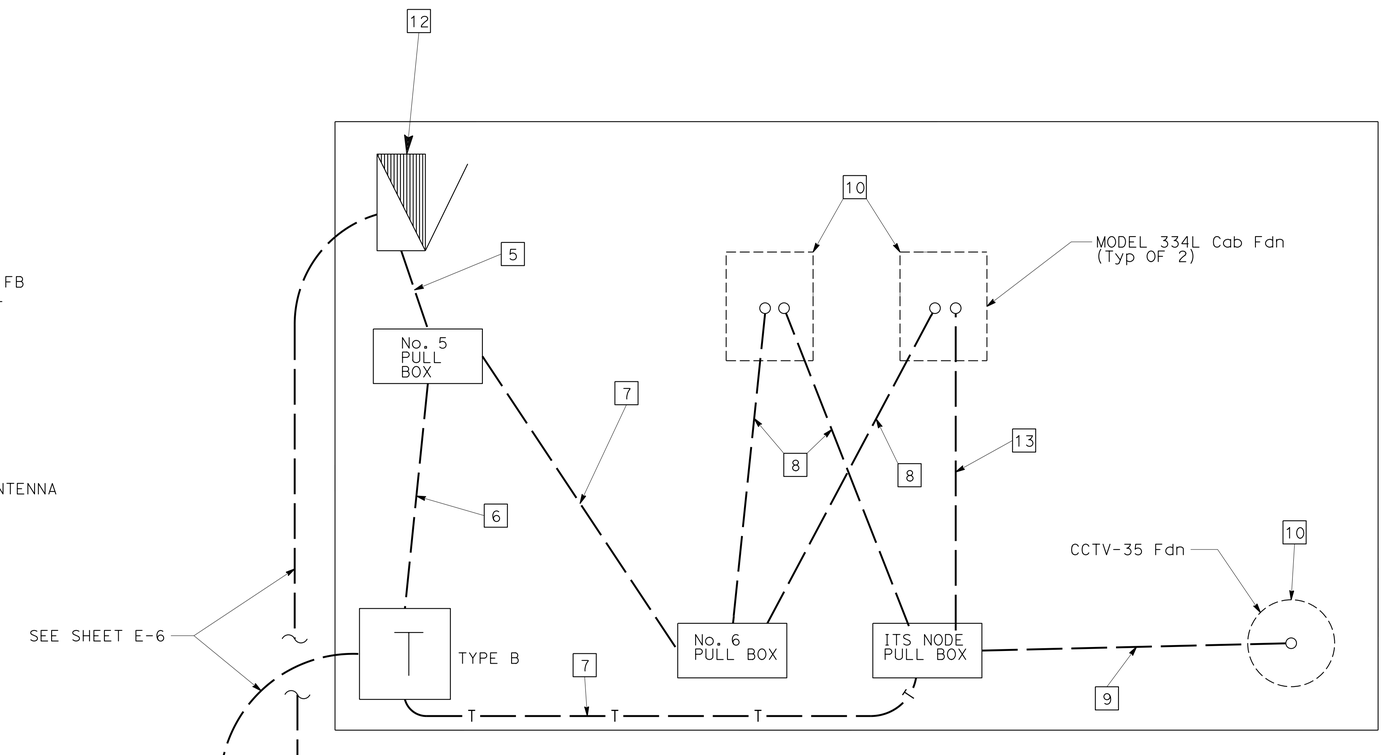

ITS NODE CONTROLLER EQUIPMENT DETAIL

ELECTRICAL DETAILS

NO SCALE

E-9

REVISED BY	DATE REVISED

CALCULATED-DESIGNED BY: ARTURO P. ROBLES
CHECKED BY: JIM HANNIGAN
FUNCTIONAL SUPERVISOR: ROB STINGER

STATE OF CALIFORNIA - DEPARTMENT OF TRANSPORTATION
Caltrans® ELECTRICAL DESIGN

P:\proj1\02\4E420_plans\pse\24e420ua009.dgn

LAST REVISION 06-10-16 | DATE PLOTTED => 28-JUL-2016 | TIME PLOTTED => 13:52

Dist	COUNTY	ROUTE	POST MILES TOTAL PROJECT	SHEET No.	TOTAL SHEETS
02	Las, Sie,Las	70, 395	3.5/3.9 R0.0/R3.1,R0.0/R5.6	129	236

ART 06-10-16
REGISTERED ELECTRICAL ENGINEER DATE

06-15-16
PLANS APPROVAL DATE

REGISTERED PROFESSIONAL ENGINEER A.P. ROBLES No. E15293 Exp. 3-31-17 ELECTRICAL STATE OF CALIFORNIA

THE STATE OF CALIFORNIA OR ITS OFFICERS OR AGENTS SHALL NOT BE RESPONSIBLE FOR THE ACCURACY OR COMPLETENESS OF SCANNED COPIES OF THIS PLAN SHEET.

NOTE:

1. FOR DETAILS NOT SHOWN, SEE RSP ES-2D.

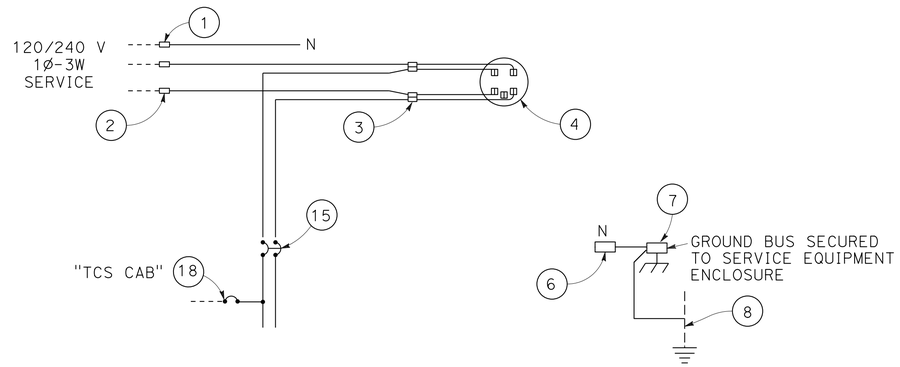

TRAFFIC COUNT STATION 120/240 V SERVICE

CTID No. 0213395R002800

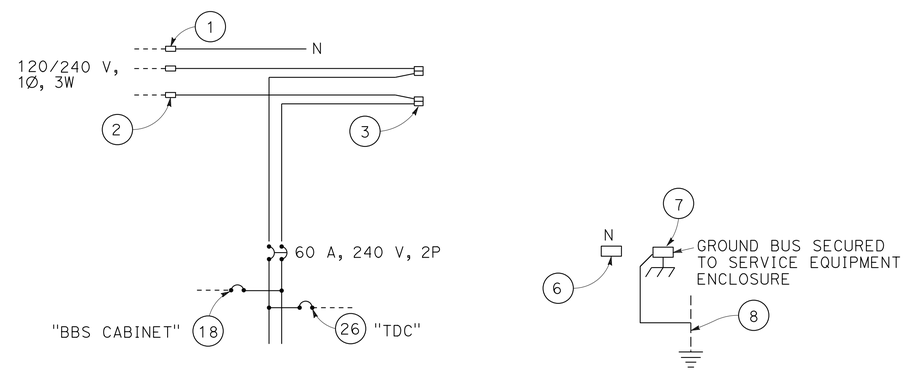

ITS SUBPANEL

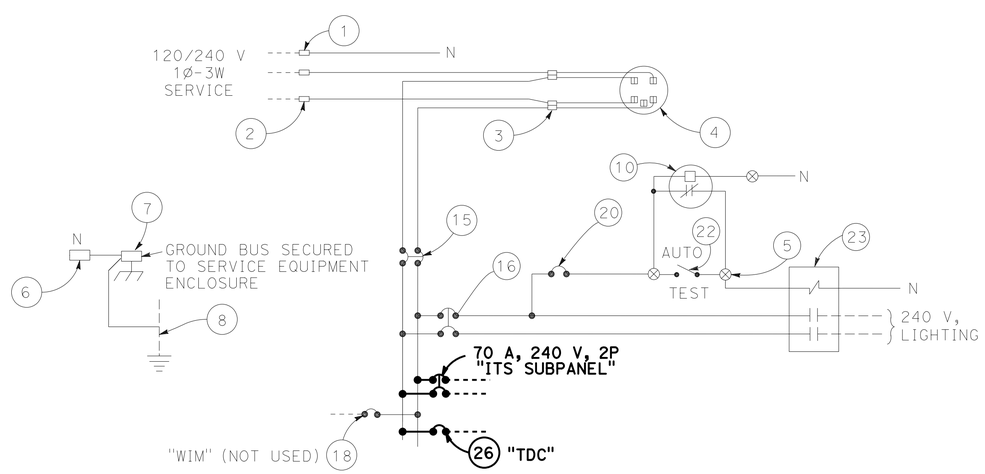

JCT 70/395 LIGHTING 120/240 V SERVICE

CTID No. 02073950004580

ELECTRICAL DETAILS

NO SCALE

E-10

REVISED BY	DATE REVISED
ARTURO P. ROBLES	JIM HANNIGAN
CALCULATED-DESIGNED BY	CHECKED BY
FUNCTIONAL SUPERVISOR	ROB STINGER

STATE OF CALIFORNIA - DEPARTMENT OF TRANSPORTATION
Caltrans® ELECTRICAL DESIGN

P:\proj1\02\4E420_plans\pse\24e420ua010.dgn

LAST REVISION 06-10-16 | DATE PLOTTED => 28-JUL-2016 | TIME PLOTTED => 13:52

Dist	COUNTY	ROUTE	POST MILES TOTAL PROJECT	SHEET No.	TOTAL SHEETS
02	Las, Sie,Las	70, 395	3.5/3.9 R0.0/R3.1,R0.0/R5.6	130	236

ART 06-10-16
REGISTERED ELECTRICAL ENGINEER DATE

06-15-16
PLANS APPROVAL DATE

REGISTERED PROFESSIONAL ENGINEER A.P. ROBLES No. E15293 Exp. 3-31-17 ELECTRICAL STATE OF CALIFORNIA

THE STATE OF CALIFORNIA OR ITS OFFICERS OR AGENTS SHALL NOT BE RESPONSIBLE FOR THE ACCURACY OR COMPLETENESS OF SCANNED COPIES OF THIS PLAN SHEET.

NOTE:

1. (N) - NOT A SEPARATE PAY ITEM. FOR INFORMATION ONLY.

MAINTAINING EXISTING TRAFFIC MANAGEMENT SYSTEM ELEMENTS DURING CONSTRUCTION

TYPE	LOCATION		DESCRIPTION
HAR	Las-395-R1.58	"N1" 346+82.9, R+	N OF AGRICULTURAL INSPECTION STATION
HAR FB	Las-395-R1.70	"N1" 350+00.0, R+	FACING NORTHBOUND TRAFFIC
HAR FB	Las-395-R1.70	"S1" 263+13.2, L+	FACING SOUTHBOUND TRAFFIC
CMS	Las-395-R1.70	"N1" 350+56.0, R+	FACING NORTHBOUND TRAFFIC

MODIFYING EXISTING ELECTRICAL SYSTEMS

	SHEET No.	(N) LED LUMINAIRE-ROADWAY 1	(N) LED LUMINAIRE-ROADWAY 2	(N) ISL SIGN LIGHTING
		EA	EA	EA
MODIFY LIGHTING	E-1		2	
	E-2	6	1	1
	E-3		2	

TRAFFIC MONITORING STATION SYSTEM

SHEET No.	(N) 2" CONDUIT	(N) 3" CONDUIT	(N) No. 8 CONDUCTOR	(N) No. 8 GROUND	(N) PULL TAPE	(N) No. 5 PULL BOX	(N) No. 5(T) PULL BOX	(N) No. 6 PULL BOX	(N) TYPE III-AF SERVICE EQUIPMENT ENCLOSURE	(N) RELOCATE TMS CABINET	(N) TYPE A LOOP DETECTORS	(N) DETECTOR LEAD-IN CABLE	(N) PIEZOELECTRIC AXLE SENSORS	(N) SCREENED TRANSMISSION CABLE
	LF	LF	LF	LF	LF	EA	EA	EA	EA	EA	EA	EA	EA	LF
E-4	250	40	40	20	40	1	2	1	1		8	1000	4	500
E-5										1				
E-6						2					2			

CLOSED CIRCUIT TELEVISION SYSTEM

SHEET No.	(N) 2" CONDUIT	(N) 3" CONDUIT	(N) No. 4 CONDUCTOR	(N) No. 8 GROUND	(N) No. 12 CONDUCTOR	(N) No. 12 GROUND	(N) TELEPHONE CABLE	(N) PULL TAPE	(N) No. 5 PULL BOX	(N) No. 5(T) PULL BOX	(N) No. 6 PULL BOX	(N) ITS NODE PULL BOX	(N) ITS SUBPANEL	(N) TELEPHONE DEMARCATION CABINET	(N) MODEL 334L Fdn	(N) CCTV-35 Fdn
	LF	LF	LF	LF	LF	LF	LF	LF	EA	EA	EA	EA	EA	EA	EA	EA
E-7	600	50	600	300	20	10	300	425	4	6	2	1	1	1	2	1

ELECTRICAL QUANTITIES

E-11

REVISED BY | DATE REVISED
ARTURO P. ROBLES | JIM HANNIGAN
CALCULATED-DESIGNED BY | CHECKED BY
FUNCTIONAL SUPERVISOR: ROB STINGER

STATE OF CALIFORNIA - DEPARTMENT OF TRANSPORTATION
Caltrans® ELECTRICAL DESIGN

P:\proj1\02\4E420_plans\pse\24e420ua011.dgn

LAST REVISION 06-10-16 | DATE PLOTTED => 28-JUL-2016 TIME PLOTTED => 13:52

M

Maint	MAINTENANCE
Max	MAXIMUM
MB	METAL BEAM
MBB	METAL BEAM BARRIER
MBGR	METAL BEAM GUARD RAILING
Med	MEDIAN
MGS	MIDWEST GUARDRAIL SYSTEM
MH	MANHOLE
Min	MINIMUM
Misc	MISCELLANEOUS
Misc I & S	MISCELLANEOUS IRON AND STEEL
Mkr	MARKER
Mod	MODIFIED, MODIFY
Mon	MONUMENT
MP	METAL PLATE
MPGR	METAL PLATE GUARD RAILING
MR	MOVEMENT RATING
MSE	MECHANICALLY STABILIZED EMBANKMENT
Mt	MOUNTAIN, MOUNT
Mtl	MATERIAL
MVP	MAINTENANCE VEHICLE PULLOUT

N

N	NORTH
NB	NORTHBOUND
No.	NUMBER (MUST HAVE PERIOD)
Nos.	NUMBERS (MUST HAVE PERIOD)
NPS	NOMINAL PIPE SIZE
NS	NEAR SIDE
NSP	NEW STANDARD PLAN
NTS	NOT TO SCALE

O

Oblr	OBLITERATE
OC	OVERCROSSING
OD	OUTSIDE DIAMETER
OF	OUTSIDE FACE
OG	ORIGINAL GROUND
OGAC	OPEN GRADED ASPHALT CONCRETE
OGFC	OPEN GRADED FRICTION COURSE
OH	OVERHEAD
OHWM	ORDINARY HIGH WATER MARK
O-O	OUT TO OUT
Opp	OPPOSITE
OSD	OVERSIDE DRAIN

P

P	PAGE
PAP	PERFORATED ALUMINUM PIPE
PB	PULL BOX
PC	POINT OF CURVATURE, PRECAST
PCC	POINT OF COMPOUND CURVE, PORTLAND CEMENT CONCRETE
PCMS	PORTABLE CHANGEABLE MESSAGE SIGN
PCP	PERFORATED CONCRETE PIPE, PRESTRESSED CONCRETE PIPE
PCVC	POINT OF COMPOUND VERTICAL CURVE
PEC	PERMIT TO ENTER AND CONSTRUCT
Ped	PEDESTRIAN
Ped OC	PEDESTRIAN OVERCROSSING
Ped UC	PEDESTRIAN UNDERCROSSING
Perm Mtl	PERMEABLE MATERIAL

P continued

PG	PROFILE GRADE
PI	POINT OF INTERSECTION
PJP	PARTIAL JOINT PENETRATION
Pkwy	PARKWAY
ℙ,PL	PLATE
P/L	PROPERTY LINE
PM	POST MILE, TIME FROM NOON TO MIDNIGHT
PN	PAVING NOTCH
POC	POINT OF HORIZONTAL CURVE
POT	POINT OF TANGENT
POVC	POINT OF VERTICAL CURVE
PP	PIPE PILE, PLASTIC PIPE, POWER POLE
PPL	PREFORMED PERMEABLE LINER
PPP	PERFORATED PLASTIC PIPE
PRC	POINT OF REVERSE CURVE
PRF	PAVEMENT REINFORCING FABRIC
PRVC	POINT OF REVERSE VERTICAL CURVE
PS&E	PLANS, SPECIFICATIONS AND ESTIMATES
PS, P/S	PRESTRESSED
PSP	PERFORATED STEEL PIPE
PT	POINT OF TANGENCY
PVC	POLYVINYL CHLORIDE
Pvmt	PAVEMENT

Q

Qty	QUANTITY

R

R	RADIUS
R & D	REMOVE AND DISPOSE
R & S	REMOVE AND SALVAGE
R/C	RATE OF CHANGE
RCA	REINFORCED CONCRETE ARCH
RCB	REINFORCED CONCRETE BOX
RCP	REINFORCED CONCRETE PIPE
RCPA	REINFORCED CONCRETE PIPE ARCH
Rd	ROAD
Reinf	REINFORCED, REINFORCEMENT, REINFORCING
Rel	RELOCATE
Repl	REPLACEMENT
Ret	RETAINING
Rev	REVISED, REVISION
Rdwy	ROADWAY
RHMA	RUBBERIZED HOT MIX ASPHALT
Riv	RIVER
RM	ROAD-MIXED
RP	RADIUS POINT, REFERENCE POINT
RR	RAILROAD
RSP	ROCK SLOPE PROTECTION, REVISED STANDARD PLAN
Rt	RIGHT
Rte	ROUTE
RW	REDWOOD, RETAINING WALL
R/W	RIGHT OF WAY
Rwy	RAILWAY

S

S	SOUTH, SUPPLEMENT
SAE	STRUCTURE APPROACH EMBANKMENT
Salv	SALVAGE
SAPP	STRUCTURAL ALUMINUM PLATE PIPE
SB	SOUTHBOUND
SC	SAND CUSHION
SCSP	SLOTTED CORRUGATED STEEL PIPE
SD	STORM DRAIN
Sec	SECOND, SECTION
Sep	SEPARATION
SG	SUBGRADE
Shld	SHOULDER
Sht	SHEET
Sim	SIMILAR
℄	STATION LINE
SM	SELECTED MATERIAL
Spec	SPECIAL, SPECIFICATIONS
SPP	SLOTTED PLASTIC PIPE
SS	SLOPE STAKE
SSBM	STRAP AND SADDLE BRACKET METHOD
SSD	STRUCTURAL SECTION DRAIN
SSPA	STRUCTURAL STEEL PLATE ARCH
SSPP	STRUCTURAL STEEL PLATE PIPE
SSPPA	STRUCTURAL STEEL PLATE PIPE ARCH
SSRP	STEEL SPIRAL RIB PIPE
St	STREET
Sta	STATION
STBB	SINGLE THRIE BEAM BARRIER
Std	STANDARD
Str	STRUCTURE
Surf	SURFACING
SW	SIDEWALK, SOUND WALL
Swr	SEWER
Sym	SYMMETRICAL
S4S	SURFACE 4 SIDES

T

T	SEMI-TANGENT
Tan	TANGENT
TBB	THRIE BEAM BARRIER
Tbr	TIMBER
TC	TOP OF CURB
TCB	TRAFFIC CONTROL BOX
TCE	TEMPORARY CONSTRUCTION EASEMENT
Tel	TELEPHONE
Temp	TEMPORARY
TG	TOP OF GRADE
Tot	TOTAL
TP	TELEPHONE POLE
TPB	TREATED PERMEABLE BASE
TPM	TREATED PERMEABLE MATERIAL
Trans	TRANSITION

T continued

TS	TRANSVERSE, TRAFFIC SIGNAL, TUBULAR STEEL
Typ	TYPICAL

U

UC	UNDERCROSSING
UD	UNDERDRAIN
UG	UNDERGROUND
UON	UNLESS OTHERWISE NOTED
UP	UNDERPASS

V

V	VALVE, DESIGN SPEED
Var	VARIABLE, VARIES
VC	VERTICAL CURVE
VCP	VITRIFIED CLAY PIPE
Vert	VERTICAL
Via	VIADUCT
Vol	VOLUME

W

W	WEST, WIDTH
WB	WESTBOUND
WH	WEEP HOLE
WM	WIRE MESH
WS	WATER SURFACE
WSP	WELDED STEEL PIPE
Wt	WEIGHT
WV	WATER VALVE
WW	WINGWALL
WWLOL	WINGWALL LAYOUT LINE

X

X Sec	CROSS SECTION
Xing	CROSSING

Y

Yr	YEAR
Yrs	YEARS

Dist	COUNTY	ROUTE	POST MILES TOTAL PROJECT	SHEET No.	TOTAL SHEETS
02	Las, Sie,Las	70, 395	3.5/3.9 R0.0/R3.1,R0.0/R5.6	131	236

Grace M. Tsushima
REGISTERED CIVIL ENGINEER

July 19, 2013
PLANS APPROVAL DATE

REGISTERED PROFESSIONAL ENGINEER Grace M. Tsushima No. C49814 Exp. 9-30-14 CIVIL STATE OF CALIFORNIA

THE STATE OF CALIFORNIA OR ITS OFFICERS OR AGENTS SHALL NOT BE RESPONSIBLE FOR THE ACCURACY OR COMPLETENESS OF SCANNED COPIES OF THIS PLAN SHEET.

TO ACCOMPANY PLANS DATED 06-15-16

UNIT OF MEASUREMENT SYMBOLS:

Some of the symbols used in the project plan quantity tables and in the Bid Item List are:

TABLE A

SYMBOL USED	DEFINITIONS
ACRE	ACRE
CF	CUBIC FOOT
CY	CUBIC YARD
EA	EACH
GAL	GALLON
LB	POUND
LF	LINEAR FOOT
SQFT	SQUARE FOOT
SQYD	SQUARE YARD
STA	100 FEET
TAB	TABLET
TON	2,000 POUNDS

Some of the symbols used in the plans other than in the project plan quantity tables are:

TABLE B

SYMBOL USED	DEFINITIONS
ksi	KIPS PER SQUARE INCH
ksf	KIPS PER SQUARE FOOT
psi	POUNDS PER SQUARE INCH
psf	POUNDS PER SQUARE FOOT
lb/ft^3, pcf	POUNDS PER CUBIC FOOT
tsf	TONS PER SQUARE FOOT
mph, MPH *	MILES PER HOUR
ø	NOMINAL DIAMETER
oz	OUNCE
lb	POUND
kip	1,000 POUNDS
cal	CALORIE
ft	FOOT OR FEET
gal	GALLON

* For use on a sign panel only

STATE OF CALIFORNIA
DEPARTMENT OF TRANSPORTATION

ABBREVIATIONS (SHEET 2 OF 2)

NO SCALE

RSP A10B DATED JULY 19, 2013 SUPERSEDES STANDARD PLAN A10B DATED MAY 20, 2011 - PAGE 2 OF THE STANDARD PLANS BOOK DATED 2010.

REVISED STANDARD PLAN RSP A10B

2010 REVISED STANDARD PLAN RSP A10B

DATE PLOTTED => 28-JUL-2016
TIME PLOTTED => 13:52

Dist	COUNTY	ROUTE	POST MILES TOTAL PROJECT	SHEET No.	TOTAL SHEETS
02	Las, Sie,Las	70, 395	3.5/3.9 R0.0/R3.1,R0.0/R5.6	132	236

REGISTERED CIVIL ENGINEER

July 19, 2013
PLANS APPROVAL DATE

REGISTERED PROFESSIONAL ENGINEER Roberta L. McLaughlin No. C40375 Exp. 3-31-15 CIVIL STATE OF CALIFORNIA

THE STATE OF CALIFORNIA OR ITS OFFICERS OR AGENTS SHALL NOT BE RESPONSIBLE FOR THE ACCURACY OR COMPLETENESS OF SCANNED COPIES OF THIS PLAN SHEET.

TO ACCOMPANY PLANS DATED 06-15-16

EXIT RAMP NEUTRAL AREA (GORE) TREATMENT

DETAIL 36

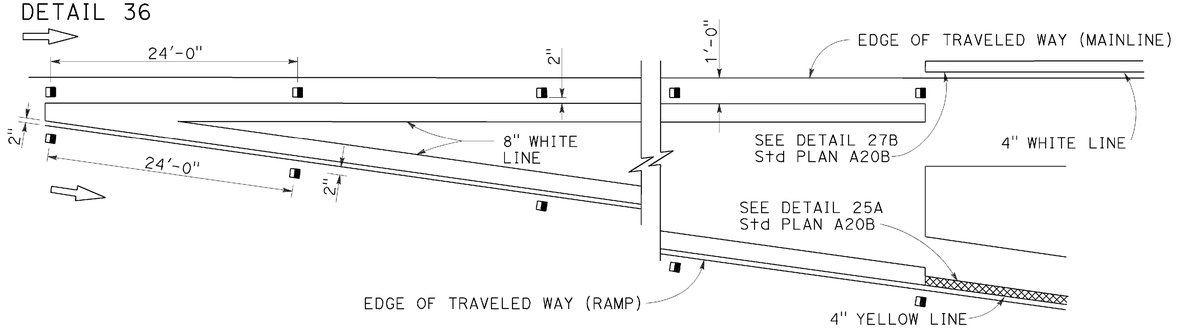

ENTRANCE RAMP NEUTRAL AREA (MERGE) TREATMENT

DETAIL 36A

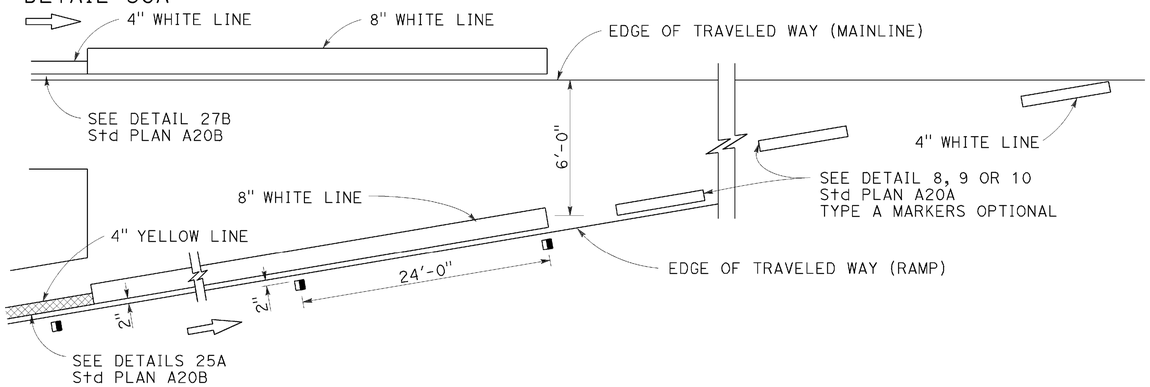

ENTRANCE RAMP NEUTRAL AREA (ACCELERATION LANE) TREATMENT

DETAIL 36B

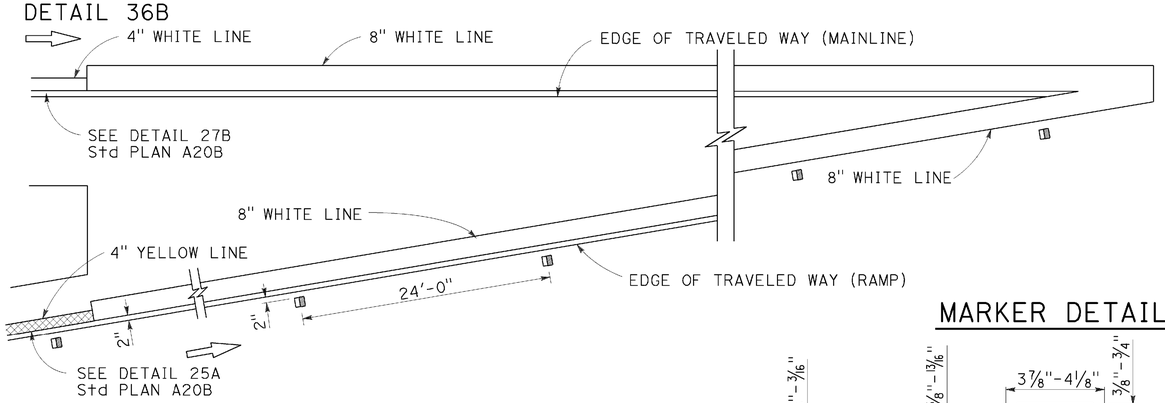

MARKER DETAILS

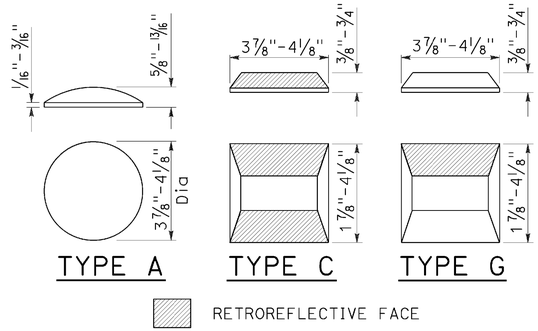

LEGEND:

MARKERS

- ○ TYPE A WHITE NON-REFLECTIVE
- ⊟ TYPE C RED-CLEAR RETROREFLECTIVE
- ◨ TYPE G ONE-WAY CLEAR RETROREFLECTIVE

LANE DROP AT EXIT RAMPS

DETAIL 37

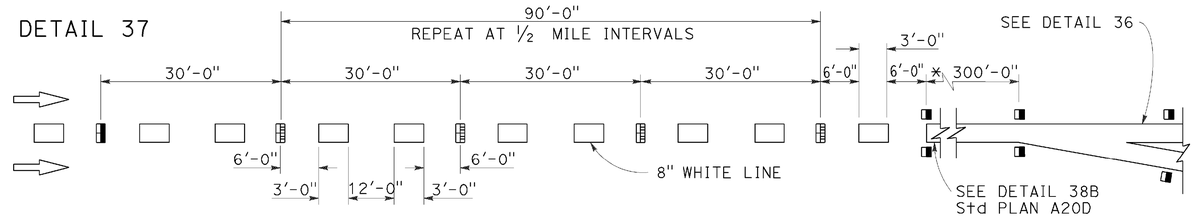

DETAIL 37A

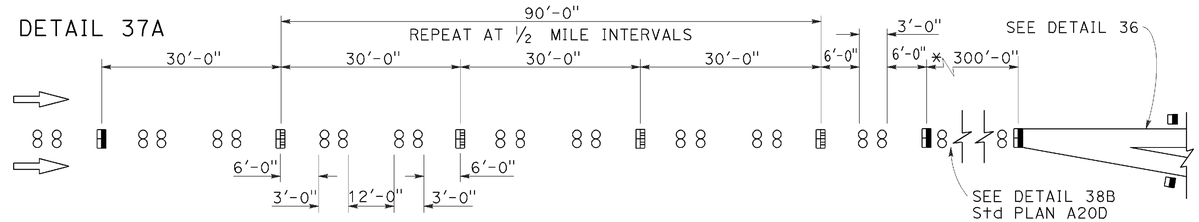

* The solid channelizing line shown may be omitted on short auxiliary lanes where weaving length is critical.

LANE DROP AT INTERSECTIONS

DETAIL 37B

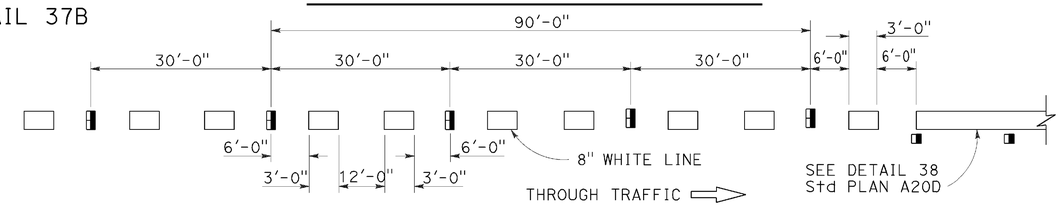

DETAIL 37C

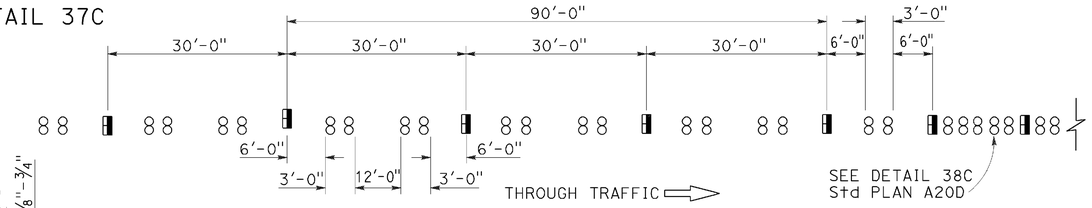

STATE OF CALIFORNIA
DEPARTMENT OF TRANSPORTATION

PAVEMENT MARKERS AND TRAFFIC LINE TYPICAL DETAILS

NO SCALE

RSP A20C DATED JULY 19, 2013 SUPERSEDES STANDARD PLAN A20C DATED MAY 20, 2011 - PAGE 11 OF THE STANDARD PLANS BOOK DATED 2010.

REVISED STANDARD PLAN RSP A20C

2010 REVISED STANDARD PLAN RSP A20C

DATE PLOTTED => 28-JUL-2016
TIME PLOTTED => 13:53

Dist	COUNTY	ROUTE	POST MILES TOTAL PROJECT	SHEET No.	TOTAL SHEETS
02	Las, Sie,Las	70, 395	3.5/3.9 R0.0/R3.1,R0.0/R5.6	133	236

REGISTERED CIVIL ENGINEER

April 20, 2012
PLANS APPROVAL DATE

REGISTERED PROFESSIONAL ENGINEER Roberta L. McLaughlin No. C40375 Exp. 3-31-13 CIVIL STATE OF CALIFORNIA

THE STATE OF CALIFORNIA OR ITS OFFICERS OR AGENTS SHALL NOT BE RESPONSIBLE FOR THE ACCURACY OR COMPLETENESS OF SCANNED COPIES OF THIS PLAN SHEET.

TO ACCOMPANY PLANS DATED 06-15-16

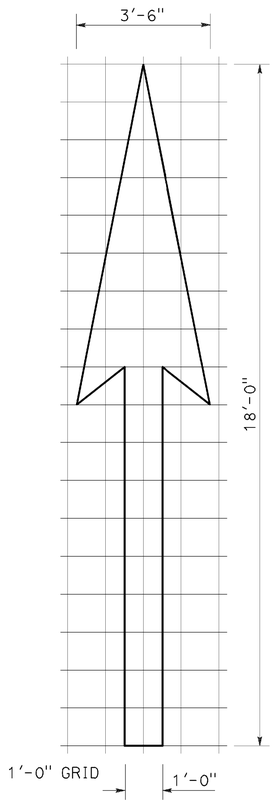

A=25 ft^2

TYPE I 18'-0" ARROW

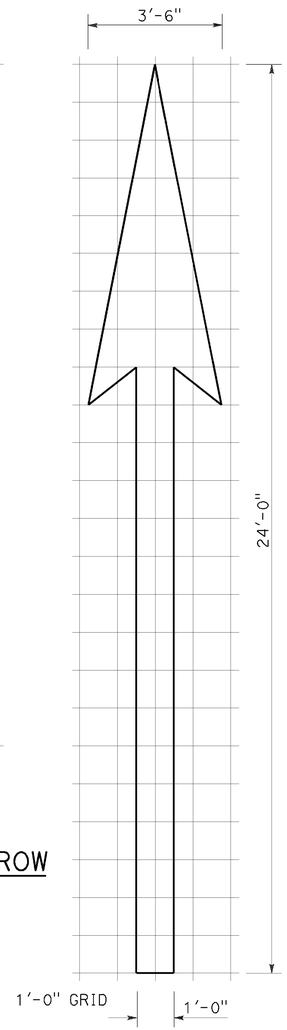

A=31 ft^2

TYPE I 24'-0" ARROW

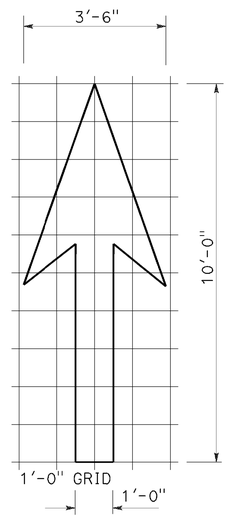

A=14 ft^2

TYPE I 10'-0" ARROW

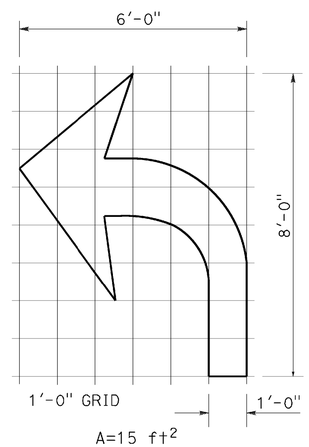

A=15 ft^2

TYPE IV (L) ARROW

(For Type IV (R) arrow, use mirror image)

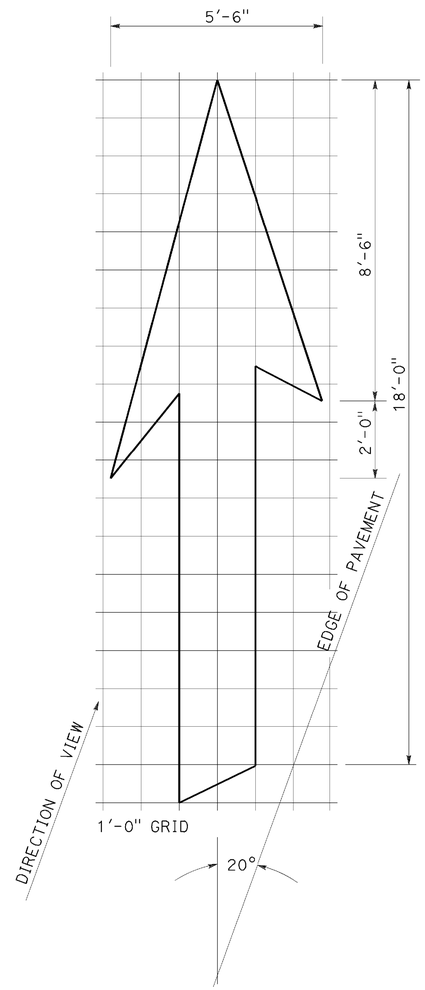

A=42 ft^2

TYPE VI ARROW

Right lane drop arrow
(For left lane, use mirror image)

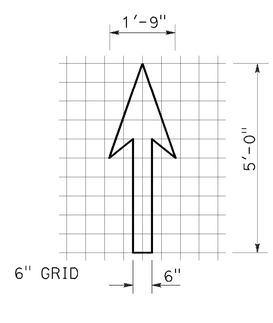

A=3.5 ft^2

BIKE LANE ARROW

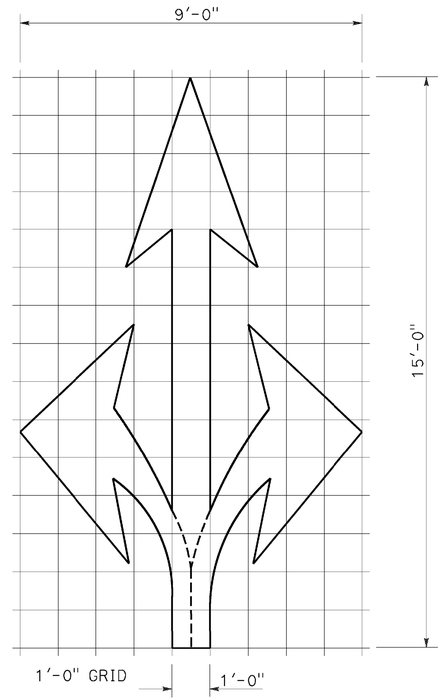

A=36 ft^2

TYPE VIII ARROW

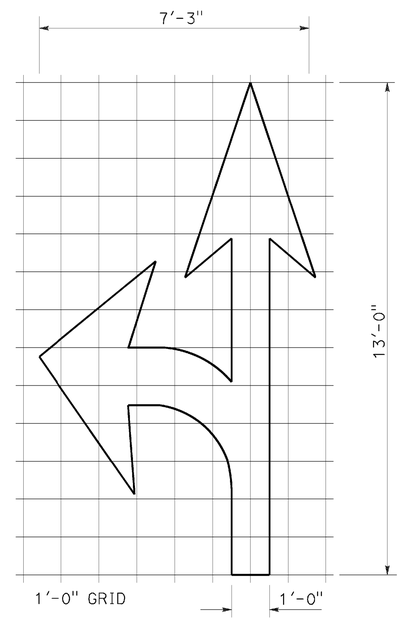

A=27 ft^2

TYPE VII (L) ARROW

(For Type VII (R) arrow, use mirror image)

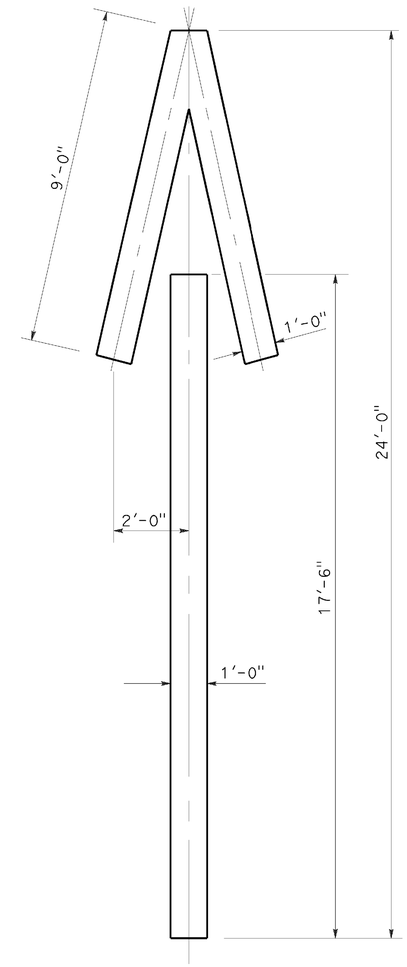

A=33 ft^2

TYPE V ARROW

NOTE:
Minor variations in dimensions may be accepted by the Engineer.

STATE OF CALIFORNIA
DEPARTMENT OF TRANSPORTATION

PAVEMENT MARKINGS ARROWS

NO SCALE

RSP A24A DATED APRIL 20, 2012 SUPERSEDES STANDARD PLAN A24A DATED MAY 20, 2011 - PAGE 13 OF THE STANDARD PLANS BOOK DATED 2010.

REVISED STANDARD PLAN RSP A24A

2010 REVISED STANDARD PLAN RSP A24A

DATE PLOTTED => 28-JUL-2016
TIME PLOTTED => 13:53

Dist	COUNTY	ROUTE	POST MILES TOTAL PROJECT	SHEET No.	TOTAL SHEETS
02	Las, Sie,Las	70, 395	3.5/3.9 R0.0/R3.1,R0.0/R5.6	134	236

REGISTERED CIVIL ENGINEER

October 19, 2012
PLANS APPROVAL DATE

REGISTERED PROFESSIONAL ENGINEER Roberta L. McLaughlin No. C40375 Exp. 3-31-13 CIVIL STATE OF CALIFORNIA

THE STATE OF CALIFORNIA OR ITS OFFICERS OR AGENTS SHALL NOT BE RESPONSIBLE FOR THE ACCURACY OR COMPLETENESS OF SCANNED COPIES OF THIS PLAN SHEET.

NOTE: TO ACCOMPANY PLANS DATED 06-15-16

Minor variations in dimensions may be accepted by the Engineer.

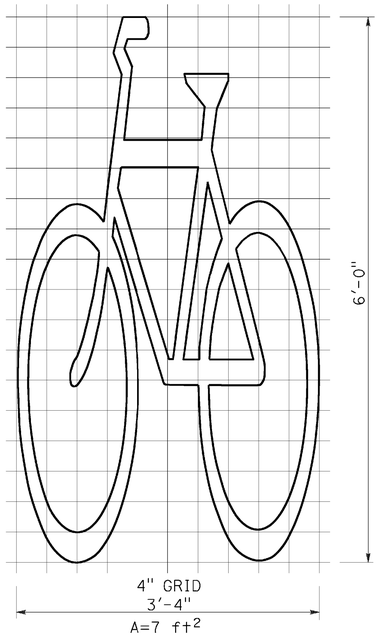

BIKE LANE SYMBOL WITHOUT PERSON

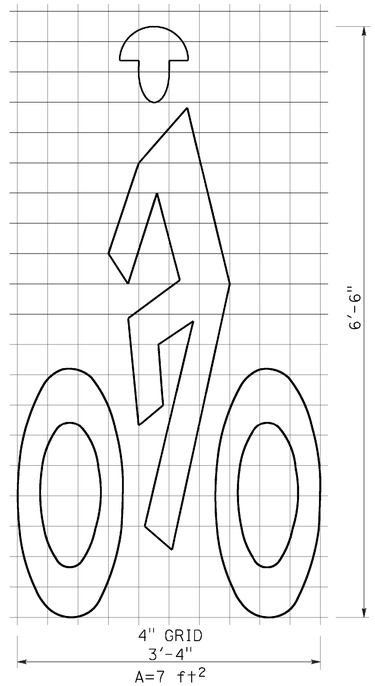

BIKE LANE SYMBOL WITH PERSON

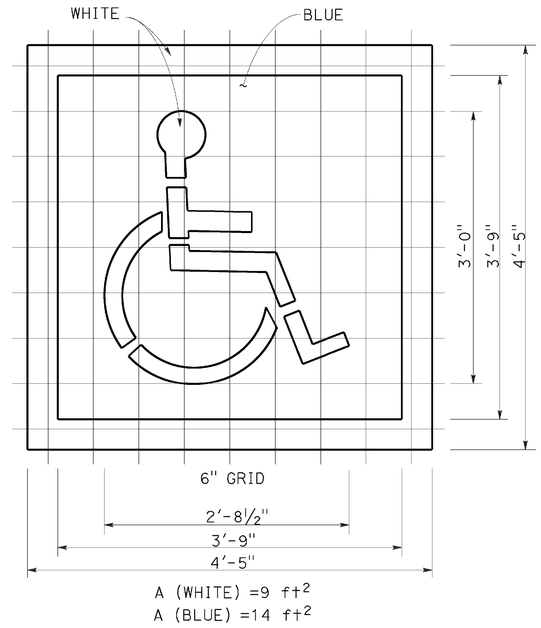

INTERNATIONAL SYMBOL OF ACCESSIBILITY (ISA) MARKING

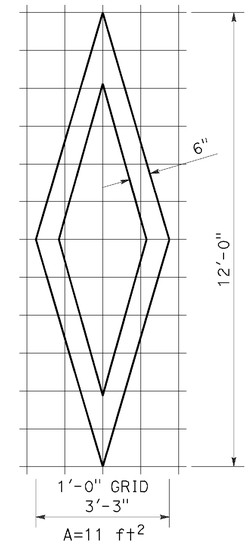

DIAMOND SYMBOL

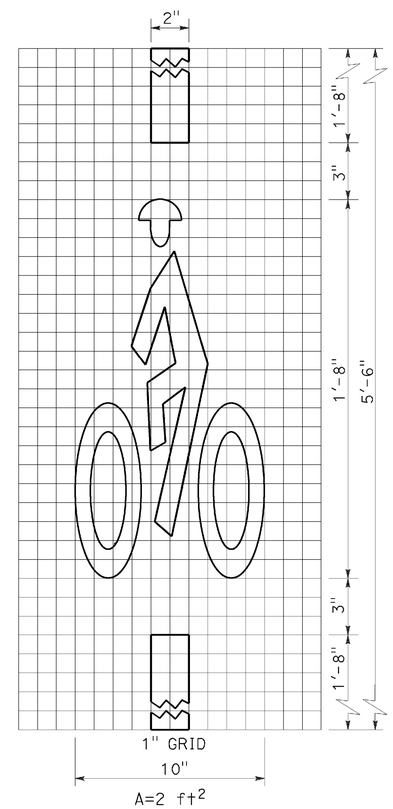

BICYCLE LOOP DETECTOR SYMBOL

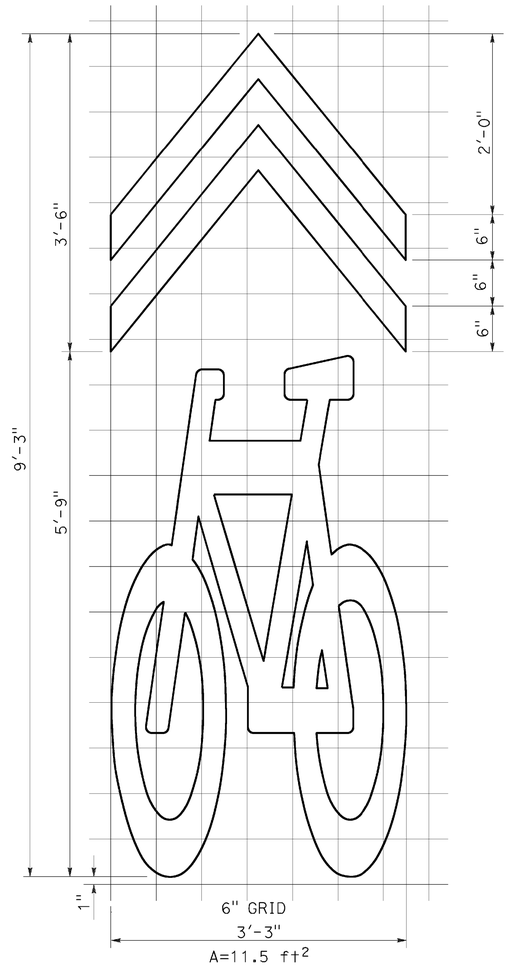

SHARED ROADWAY BICYCLE MARKING

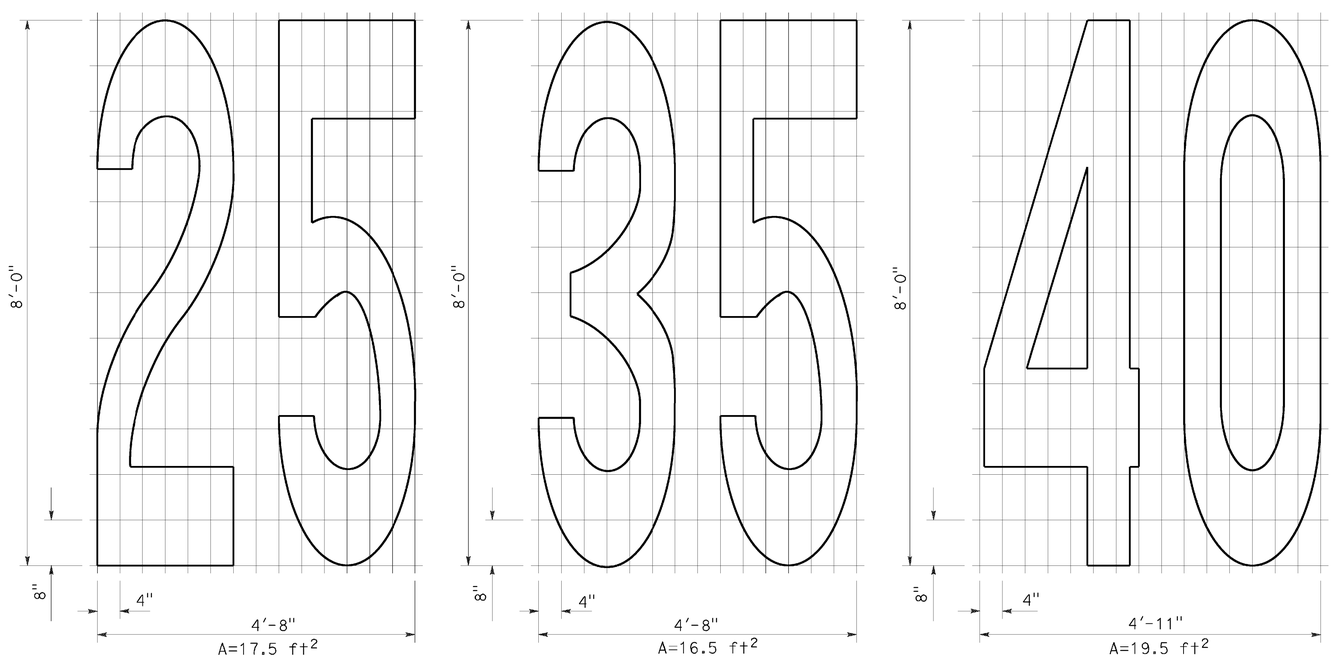

NUMERALS

STATE OF CALIFORNIA
DEPARTMENT OF TRANSPORTATION

PAVEMENT MARKINGS SYMBOLS AND NUMERALS

NO SCALE

RSP A24C DATED OCTOBER 19, 2012 SUPERSEDES STANDARD PLAN A24C DATED MAY 20, 2011 - PAGE 15 OF THE STANDARD PLANS BOOK DATED 2010.

REVISED STANDARD PLAN RSP A24C

2010 REVISED STANDARD PLAN RSP A24C

DATE PLOTTED => 28-JUL-2016
TIME PLOTTED => 13:53

Dist	COUNTY	ROUTE	POST MILES TOTAL PROJECT	SHEET No.	TOTAL SHEETS
02	Las, Sie,Las	70, 395	3.5/3.9 R0.0/R3.1,R0.0/R5.6	135	236

REGISTERED CIVIL ENGINEER

July 20, 2012
PLANS APPROVAL DATE

REGISTERED PROFESSIONAL ENGINEER Roberta L. McLaughlin No. C40375 Exp. 3-31-13 CIVIL STATE OF CALIFORNIA

THE STATE OF CALIFORNIA OR ITS OFFICERS OR AGENTS SHALL NOT BE RESPONSIBLE FOR THE ACCURACY OR COMPLETENESS OF SCANNED COPIES OF THIS PLAN SHEET.

TO ACCOMPANY PLANS DATED 06-15-16

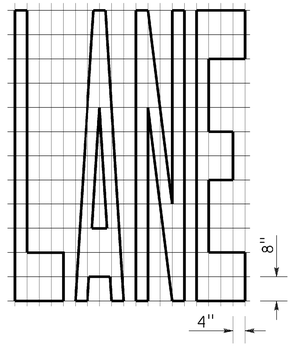

A=24 ft²

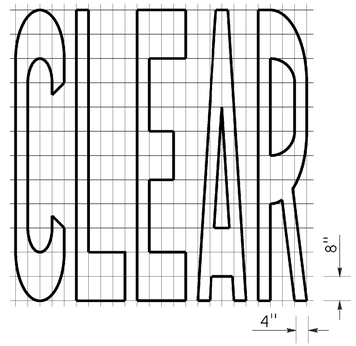

A=27 ft²

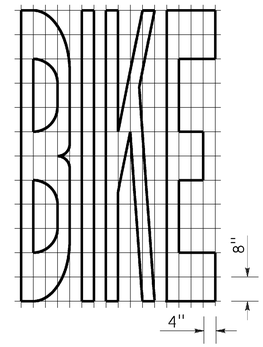

A=21 ft²

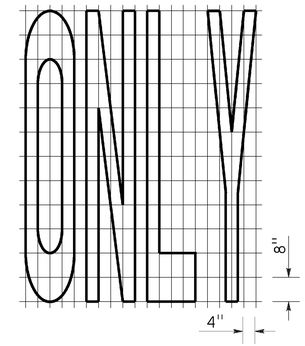

A=22 ft²

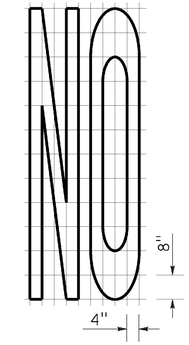

A=14 ft²

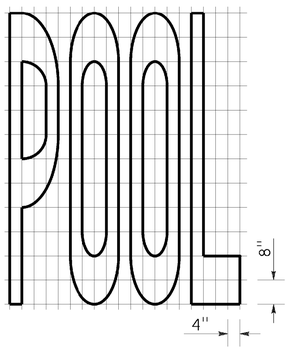

A=23 ft²

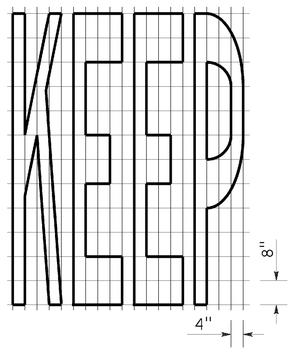

A=24 ft²

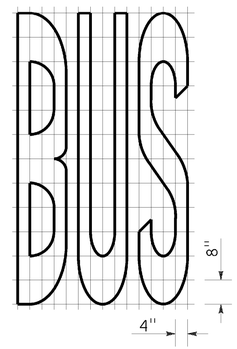

A=20 ft²

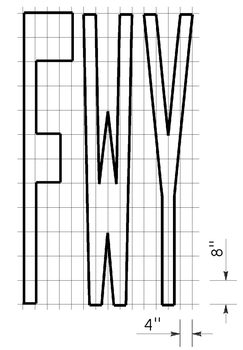

A=16 ft²

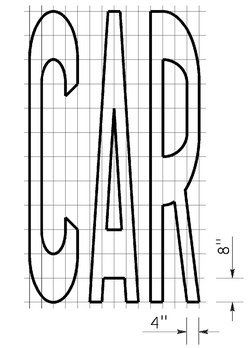

A=17 ft²

WORD MARKINGS			
ITEM	ft²	ITEM	ft²
LANE	24	NO	14
POOL	23	BIKE	21
CAR	17	BUS	20
CLEAR	27	ONLY	22
KEEP	24	FWY	16

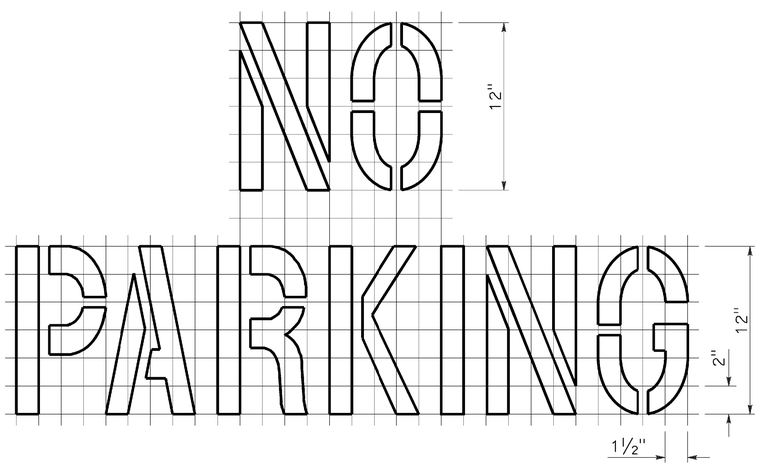

A=2 ft²

See Notes 6 and 7

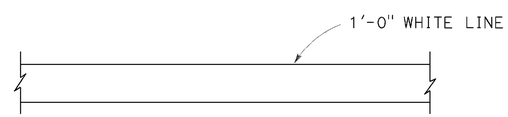

LIMIT LINE (STOP LINE)

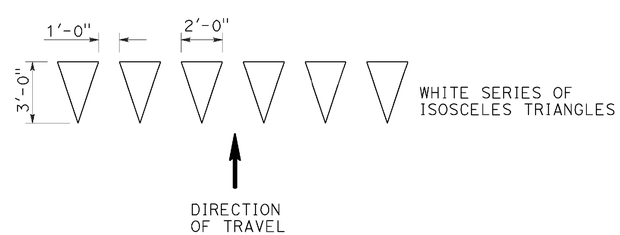

YIELD LINE

NOTES:

1. If a message consists of more than one word, it should read "UP", i.e., the first word should be nearest the driver.
2. The space between words should be at least four times the height of the characters for low speed roads, but not more than ten times the height of the characters. The space may be reduced appropriately where there is limited space because of local conditions.
3. Minor variations in dimensions may be accepted by the Engineer.
4. Portions of a letter, number or symbol may be separated by connecting segments not to exceed 2" in width.
5. The words "NO PARKING" pavement marking is to be used for parking facilities. For typical locations of markings, see Standard Plans A90A and A90B.
6. The words "NO PARKING", shall be painted in white letters no less than 1'-0" high on a contrasting background and located so that it is visible to traffic enforcement officials.

STATE OF CALIFORNIA
DEPARTMENT OF TRANSPORTATION

PAVEMENT MARKINGS WORDS, LIMIT AND YIELD LINES

NO SCALE

RSP A24E DATED JULY 20, 2012 SUPERSEDES STANDARD PLAN A24E
DATED MAY 20, 2011 - PAGE 17 OF THE STANDARD PLANS BOOK DATED 2010.

REVISED STANDARD PLAN RSP A24E

2010 REVISED STANDARD PLAN RSP A24E

DATE PLOTTED => 28-JUL-2016
TIME PLOTTED => 13:54

Dist	COUNTY	ROUTE	POST MILES TOTAL PROJECT	SHEET No.	TOTAL SHEETS
02	Las, Sie,Las	70, 395	3.5/3.9 R0.0/R3.1,R0.0/R5.6	136	236

REGISTERED CIVIL ENGINEER

October 30, 2015
PLANS APPROVAL DATE

REGISTERED PROFESSIONAL ENGINEER Carl M. Duan No. C59976 Exp. 6-30-16 CIVIL STATE OF CALIFORNIA

THE STATE OF CALIFORNIA OR ITS OFFICERS OR AGENTS SHALL NOT BE RESPONSIBLE FOR THE ACCURACY OR COMPLETENESS OF SCANNED COPIES OF THIS PLAN SHEET.

TO ACCOMPANY PLANS DATED 06-15-16

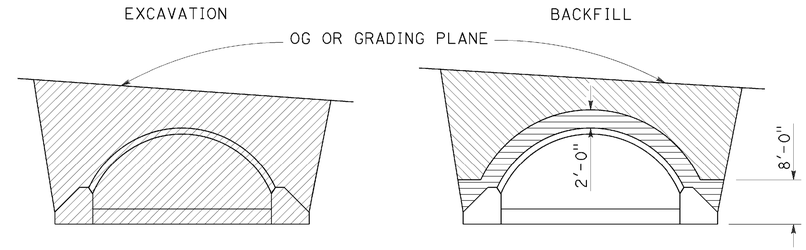

IN TRENCH

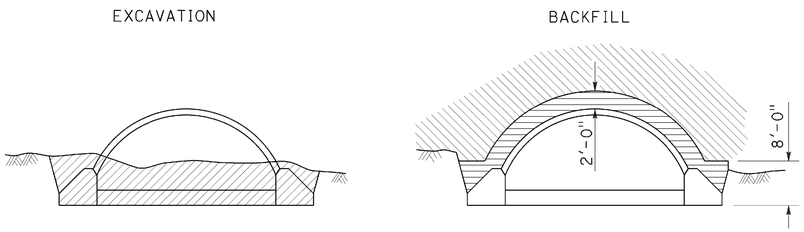

IN EMBANKMENT

STRUCTURAL STEEL PLATE ARCHES

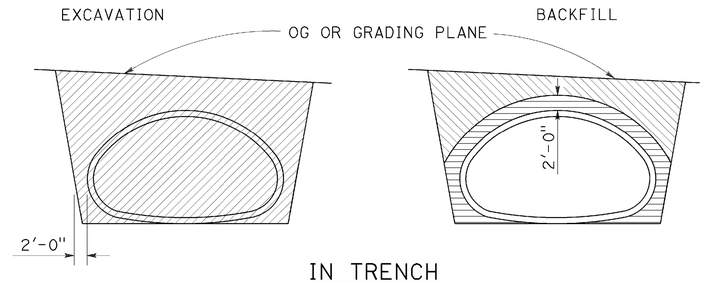

IN TRENCH

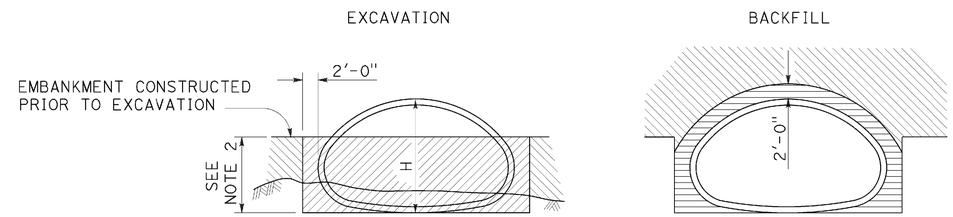

IN EMBANKMENT

STRUCTURAL STEEL PLATE PIPE ARCHES AND VEHICULAR UNDERCROSSING

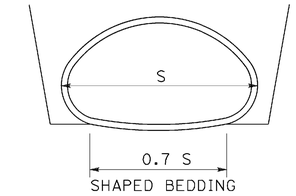

SHAPED BEDDING

S = Larger than 84"

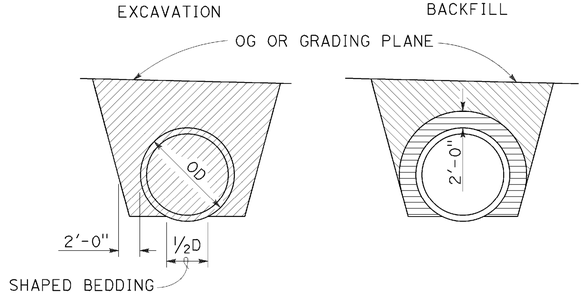

IN TRENCH

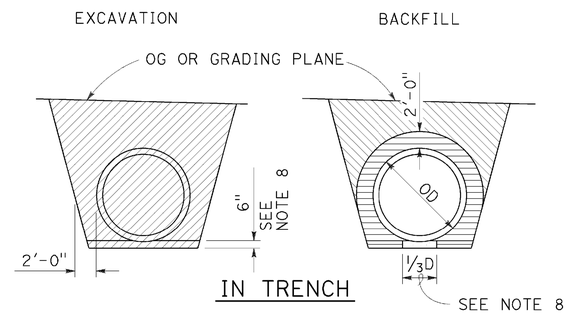

IN TRENCH

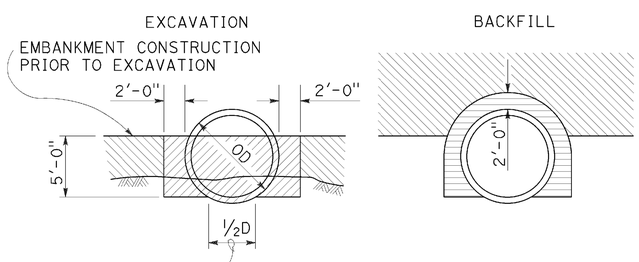

IN EMBANKMENT

PIPES

Larger than 84"

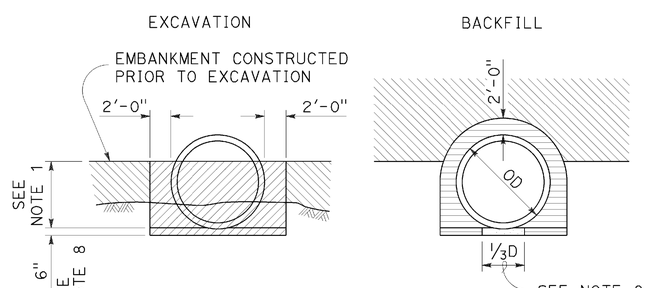

IN EMBANKMENT

METAL AND PLASTIC PIPES AND CORRUGATED METAL PIPE ARCHES

84" or Smaller

NOTES:

1. PIPES: 30" minimum for diameters up to and including 42" then ⅔ diameter but no more than 60" required. CORRUGATED METAL PIPE ARCHES: 30" maximum.
2. ⅔ H up to 60" maximum.
3. Slope or shore excavation sides as necessary.
4. Backfill shall be placed full width of excavation except as noted.
5. Diagrams do not apply to overside drains.
6. Dimensions shown are minimum.
7. Construction strutting of structural steel plate pipe, arches and vehicular undercrossing to be used when shown on the project plans. When shown, see Standard Plan D88A for strutting requirements.
8. Excavation below pipe and 80% relative compaction requirements for plastic pipes only.
9. D is the inside diameter (ID) of the pipe.

LEGEND

- STRUCTURE EXCAVATION (CULVERT)
- ROADWAY EMBANKMENT
- STRUCTURE BACKFILL (CULVERT) 95% RELATIVE COMPACTION
- STRUCTURE BACKFILL (CULVERT) 80% RELATIVE COMPACTION

STATE OF CALIFORNIA
DEPARTMENT OF TRANSPORTATION

EXCAVATION AND BACKFILL METAL AND PLASTIC CULVERTS

NO SCALE

RSP A62F DATED OCTOBER 30, 2015 SUPERSEDES STANDARD PLAN A62F DATED MAY 20, 2011 - PAGE 26 OF THE STANDARD PLANS BOOK DATED 2010.

REVISED STANDARD PLAN RSP A62F

2010 REVISED STANDARD PLAN RSP A62F

DATE PLOTTED => 28-JUL-2016
TIME PLOTTED => 13:54

Dist	COUNTY	ROUTE	POST MILES TOTAL PROJECT	SHEET No.	TOTAL SHEETS
02	Las, Sie,Las	70, 395	3.5/3.9 R0.0/R3.1,R0.0/R5.6	137	236

Randell D. Hiatt
REGISTERED CIVIL ENGINEER

July 19, 2013
PLANS APPROVAL DATE

REGISTERED PROFESSIONAL ENGINEER Randell D. Hiatt No. C50200 Exp. 6-30-15 CIVIL STATE OF CALIFORNIA

THE STATE OF CALIFORNIA OR ITS OFFICERS OR AGENTS SHALL NOT BE RESPONSIBLE FOR THE ACCURACY OR COMPLETENESS OF SCANNED COPIES OF THIS PLAN SHEET.

TO ACCOMPANY PLANS DATED 06-15-16

2010 REVISED STANDARD PLAN RSP A77L1

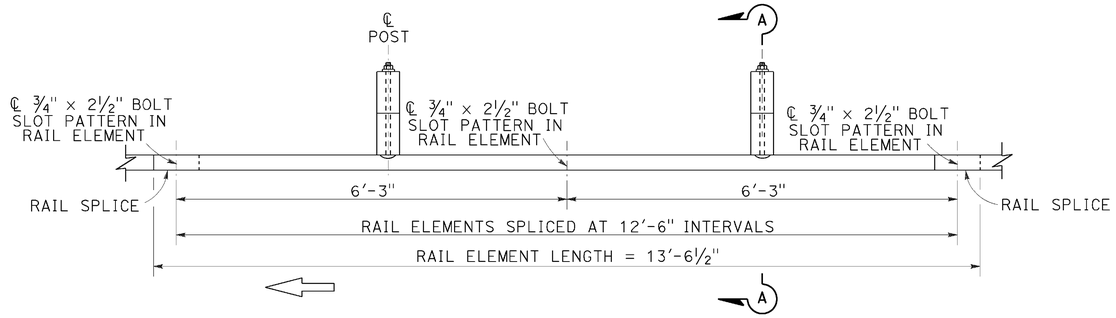

PLAN

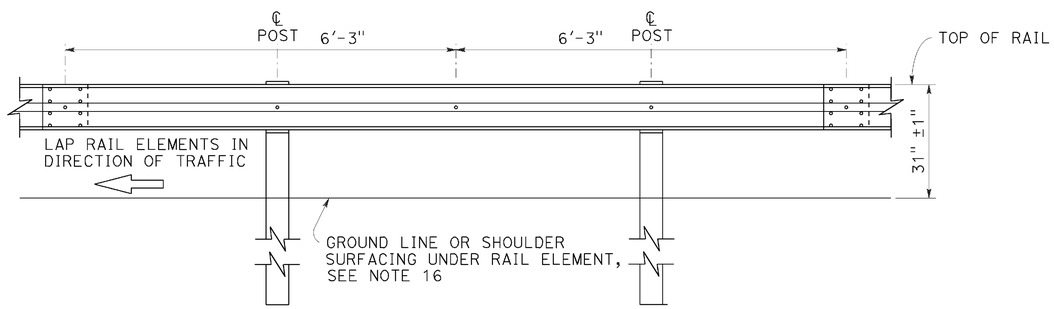

ELEVATION

MIDWEST GUARDRAIL SYSTEM WITH WOOD POST AND BLOCKS

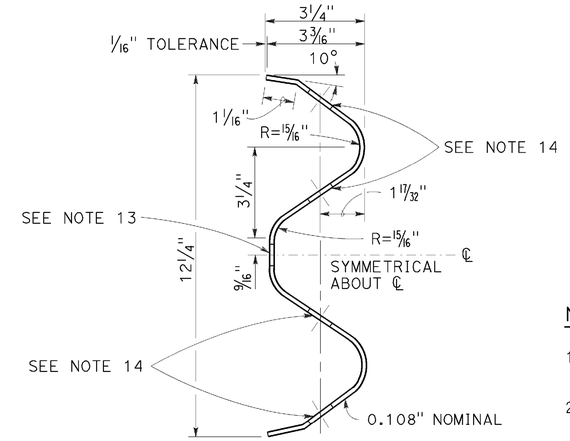

SECTION THRU RAIL ELEMENT

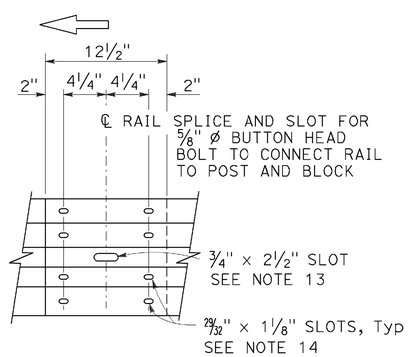

ELEVATION

RAIL ELEMENT SPLICE DETAIL

a) Connect the over lapped end of the rail elements with ⅝" ø × 1⅜" button head oval shoulder splice bolts inserted into the 29/32" × 1⅛" slots and bolted together with ⅝" ø recessed hex nuts. Recess of hex nut points toward rail element. A total of 8 bolts and nuts are to be used at each rail splice connection.

b) The ends of the rail elements are to be overlapped in the direction of traffic (see details).

c) Where end cap is to be attached to the end of a rail element, a total of 4 of the above described splice bolts and nuts are to be used.

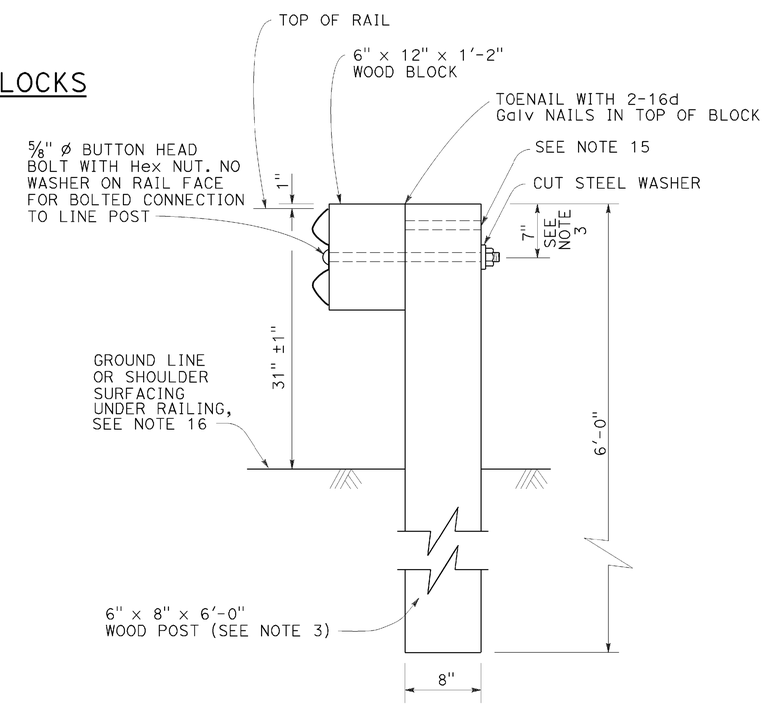

SECTION A-A

TYPICAL WOOD LINE POST INSTALLATION

See Note 4

NOTES:

1. For details of steel post installations, see Revised Standard Plan RSP A77L2.
2. For details of standard hardware used to construct MGS, see Revised Standard Plan RSP A77M1.
3. For details of wood posts and wood blocks used to construct MGS, see Revised Standard Plan RSP A77N1.
4. For additional installation details, see Revised Standard Plan RSP A77N3.
5. MGS post spacing to be 6'-3" center to center, except as otherwise noted.
6. For MGS typical layouts, see the A77P, A77Q and A77R Series of Standard Plans.
7. If railing is connected to terminal system end treatment, use 31" height terminal system end treatment.
8. For MGS end anchor details, see Revised Standard Plans RSP A77S1 and RSP A77T2.
9. For details of MGS transition to bridge railing, see Revised Standard Plan RSP A77U4.
10. For additional details of MSG connection to bridge railing, see Revised Standard Plans RSP A77U1, RSP A77U2 and RSP A77V1.
11. For MGS connection details to abutments and walls, see Revised Standard Plan RSP A77U3.
12. For typical MGS delineation and dike positioning details, see Revised Standard Plan RSP A77N4.
13. Slotted hole for bolted connection of rail element to block and post. See "Section Thru Rail Element".
14. Slotted holes for splice bolts to overlap ends of rail element. See "Section Thru Rail Element".
15. Additional hole in uppermost portion of line post is for potential future adjustments of railing height. See Revised Standard Plan RSP A77N1.
16. Install posts in soil.

STATE OF CALIFORNIA
DEPARTMENT OF TRANSPORTATION

MIDWEST GUARDRAIL SYSTEM STANDARD RAILING SECTION (WOOD POST WITH WOOD BLOCK)

NO SCALE

RSP A77L1 DATED JULY 19, 2013 SUPPLEMENTS STANDARD PLANS BOOK DATED 2010.

REVISED STANDARD PLAN RSP A77L1

DATE PLOTTED => 28-JUL-2016
TIME PLOTTED => 13:54

Dist	COUNTY	ROUTE	POST MILES TOTAL PROJECT	SHEET No.	TOTAL SHEETS
02	Las, Sie,Las	70, 395	3.5/3.9 R0.0/R3.1,R0.0/R5.6	138	236

Randell D. Hiatt
REGISTERED CIVIL ENGINEER

July 19, 2013
PLANS APPROVAL DATE

REGISTERED PROFESSIONAL ENGINEER Randell D. Hiatt No. C50200 Exp. 6-30-15 CIVIL STATE OF CALIFORNIA

THE STATE OF CALIFORNIA OR ITS OFFICERS OR AGENTS SHALL NOT BE RESPONSIBLE FOR THE ACCURACY OR COMPLETENESS OF SCANNED COPIES OF THIS PLAN SHEET.

TO ACCOMPANY PLANS DATED 06-15-16

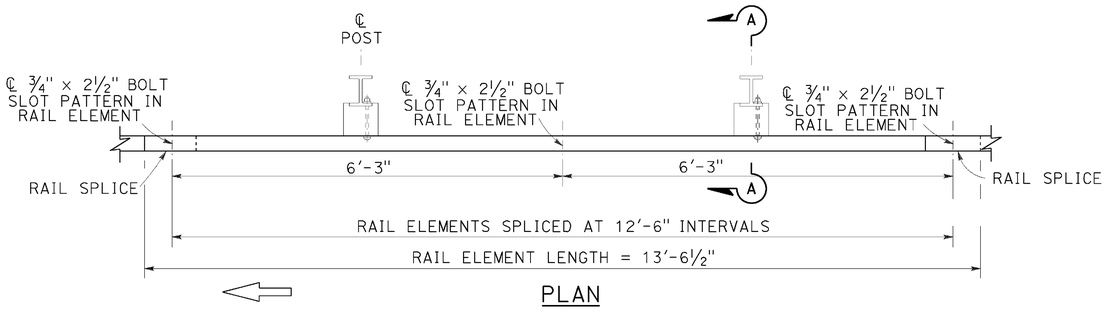

PLAN

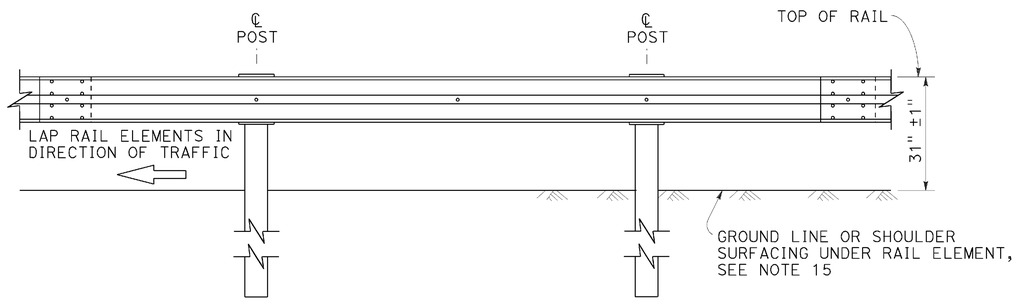

ELEVATION

MIDWEST GUARDRAIL SYSTEM WITH STEEL POSTS AND NOTCHED WOOD OR NOTCHED RECYCLED PLASTIC BLOCKS

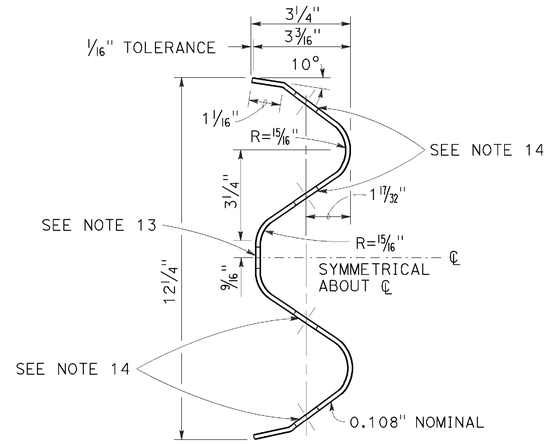

SECTION THRU RAIL ELEMENT

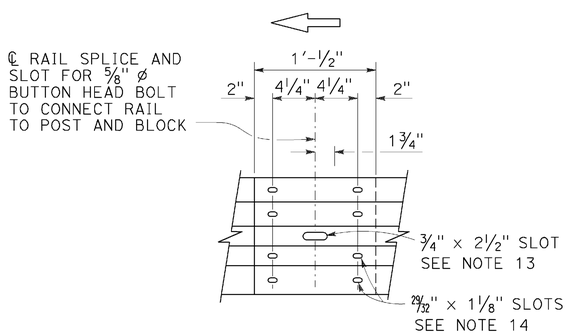

ELEVATION

RAIL ELEMENT SPLICE DETAIL

a) Connect the over lapped end of the rail elements with ⅝" ø × 1⅜" button head oval shoulder splice bolts inserted into the 29/32" × 1⅛" slots and bolted together with ⅝" ø recessed hex nuts. Recess of hex nut points toward rail element. A total of 8 bolts and nuts are to be used at each rail splice connection.

b) The ends of the rail elements are to be overlapped in the direction of traffic (see details).

c) Where end cap is to be attached to the end of a rail element, a total of 4 of the above described splice bolts and nuts are to be used.

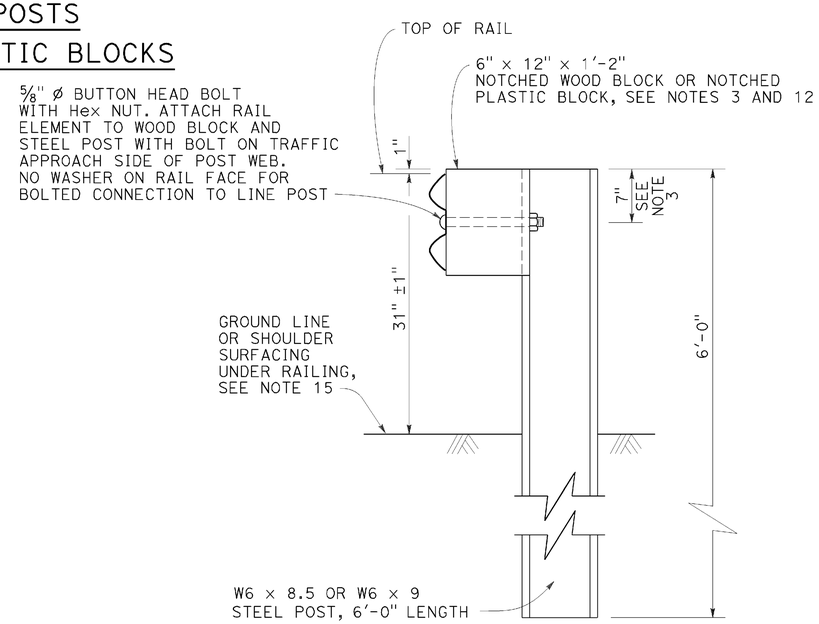

SECTION A-A

TYPICAL STEEL LINE POST INSTALLATION

See Note 4

NOTES:

1. For details of wood post installations, see Revised Standard Plan RSP A77L1.
2. For details of standard hardware used to construct MGS, see Revised Standard Plan RSP A77M1.
3. For details of steel posts and notched wood blocks used to construct MGS, see Revised Standard Plan RSP A77N2.
4. For additional installation details, see Revised Standard Plan RSP A77N3.
5. MGS post spacing to be 6'-3" center to center, except as otherwise noted.
6. For MGS typical layouts, see the A77P, A77Q and A77R Series of Standard Plans.
7. If railing is connected to terminal system end treatment, use 31" height terminal system end treatment.
8. For MGS end anchor details, see Revised Standard Plans RSP A77S1 and RSP A77T2.
9. For details of MGS transition to bridge railing, see Revised Standard Plan RSP A77U4.
10. For additional details of MGS connection to bridge railings, see Revised Standard Plans RSP A77U1, RSP A77U2 and RSP A77V1.
11. For dike positioning and MGS delineation details, see Revised Standard Plan RSP A77N4.
12. Notched face of block faces steel post.
13. Slotted hole for bolted connection of rail element to block and post. See "Section Thru Rail Element".
14. Slotted holes for splice bolts to overlap ends of rail element. See "Section Thru Rail Element".
15. Install posts in soil.

STATE OF CALIFORNIA
DEPARTMENT OF TRANSPORTATION

MIDWEST GUARDRAIL SYSTEM STANDARD RAILING SECTION (STEEL POST WITH NOTCHED WOOD OR NOTCHED RECYCLED PLASTIC BLOCK)

NO SCALE

RSP A77L2 DATED JULY 19, 2013 SUPPLEMENTS THE STANDARD PLANS BOOK DATED 2010.

REVISED STANDARD PLAN RSP A77L2

2010 REVISED STANDARD PLAN RSP A77L2

DATE PLOTTED => 28-JUL-2016
TIME PLOTTED => 13:55

Dist	COUNTY	ROUTE	POST MILES TOTAL PROJECT	SHEET No.	TOTAL SHEETS
02	Las, Sie,Las	70, 395	3.5/3.9 R0.0/R3.1,R0.0/R5.6	139	236

Randell D. Hiatt
REGISTERED CIVIL ENGINEER

July 19, 2013
PLANS APPROVAL DATE

REGISTERED PROFESSIONAL ENGINEER Randell D. Hiatt No. C50200 Exp. 6-30-15 CIVIL STATE OF CALIFORNIA

THE STATE OF CALIFORNIA OR ITS OFFICERS OR AGENTS SHALL NOT BE RESPONSIBLE FOR THE ACCURACY OR COMPLETENESS OF SCANNED COPIES OF THIS PLAN SHEET.

TO ACCOMPANY PLANS DATED 06-15-16

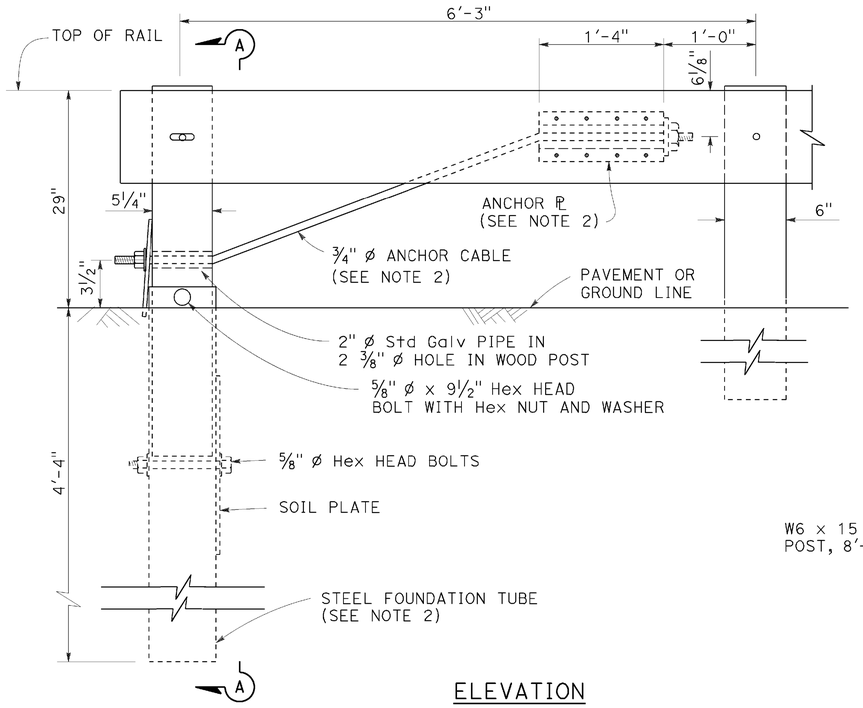

ELEVATION
END ANCHOR
ASSEMBLY (TYPE SFT)

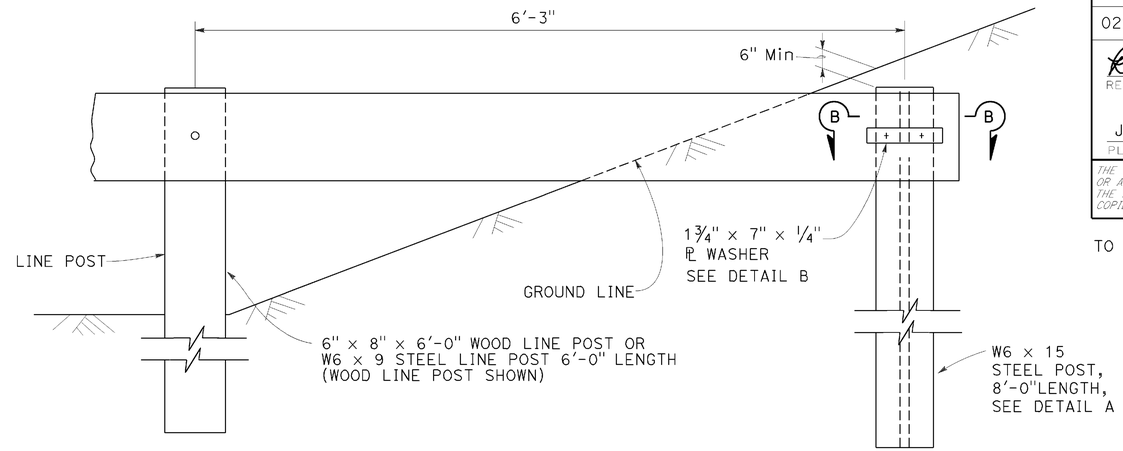

BURIED POST END ANCHOR

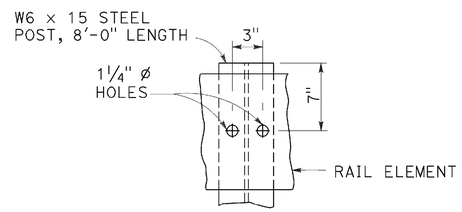

DETAIL A

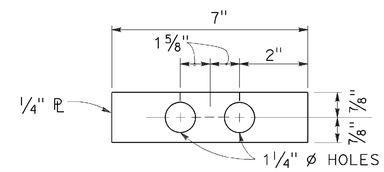

DETAIL B

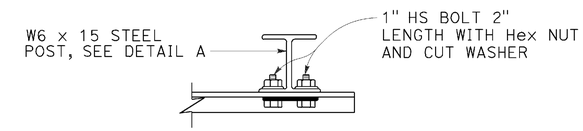

SECTION B-B

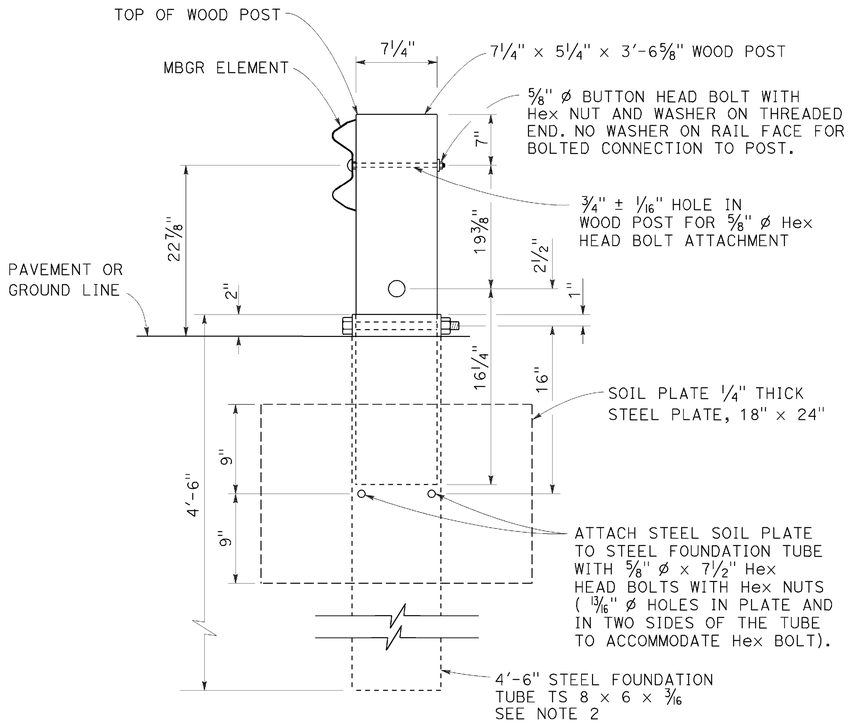

SECTION A-A

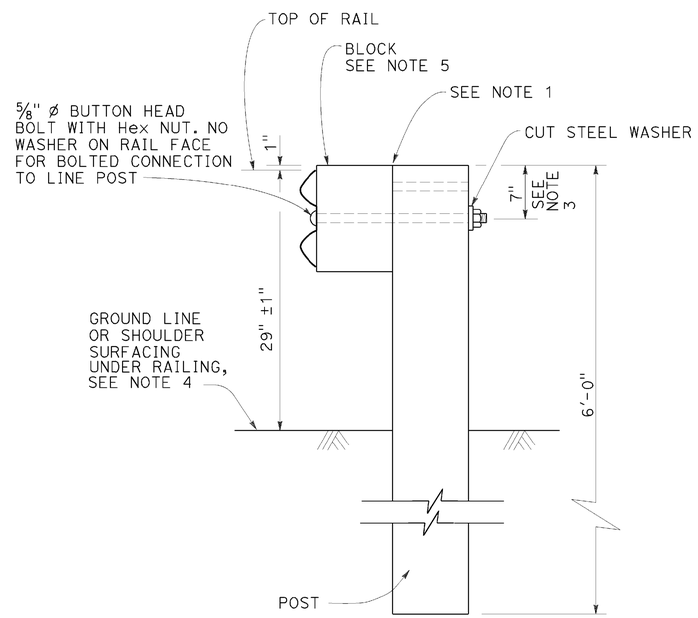

TYPICAL LINE
POST INSTALLATION

NOTES:

1. For wood post and wood block, toenail with 2-16d Galv nails in top of block. For steel post and notched wood or plastic block, notched face of block faces steel post.
2. A 6'-0" Length steel foundation tube, TS 8 x 6 x 3/16, without a soil plate, may be furnished and installed in place of the 4'-6" length steel foundation tube and soil plate shown, Minimum embadment of the 6'-0" length tube shall be 5'-9". A 5/8" ø Hex head bolt and nut shall be installed in the hole in the 6'-0" length tube to keep the wood post from dropping into the tube.
3. To connect railing to 27" terminal system end treatment, transition the top of railing height at a ratio of 120:1 to terminal system end treatment height plus one 12'-6" standard railing section at the transitioned height for a horizontal connection to the end treatment.
4. Install posts in soil.
5. See Revised Standard Plans RSP A77N1 and RSP A77N2 for details.
6. Holes excavation in the slope to construct the buried post end anchor shall be backfilled with selected earth, placed in layers approximately 1'-0" thick. Each layer shall be moistened and thoroughly compacted.

STATE OF CALIFORNIA
DEPARTMENT OF TRANSPORTATION

METAL BEAM GUARD RAILING RECONSTRUCT INSTALLATION

NO SCALE

RSP A77L3 DATED JULY 19, 2013 SUPPLEMENTS THE STANDARD PLANS BOOK DATED 2010.

REVISED STANDARD PLAN RSP A77L3

2010 REVISED STANDARD PLAN RSP A77L3

DATE PLOTTED => 28-JUL-2016
TIME PLOTTED => 13:55

Dist	COUNTY	ROUTE	POST MILES TOTAL PROJECT	SHEET No.	TOTAL SHEETS
02	Las, Sie,Las	70, 395	3.5/3.9 R0.0/R3.1,R0.0/R5.6	140	236

Randell D. Hiatt
REGISTERED CIVIL ENGINEER

July 19, 2013
PLANS APPROVAL DATE

REGISTERED PROFESSIONAL ENGINEER
Randell D. Hiatt
No. C50200
Exp. 6-30-15
CIVIL
STATE OF CALIFORNIA

THE STATE OF CALIFORNIA OR ITS OFFICERS OR AGENTS SHALL NOT BE RESPONSIBLE FOR THE ACCURACY OR COMPLETENESS OF SCANNED COPIES OF THIS PLAN SHEET.

TO ACCOMPANY PLANS DATED 06-15-16

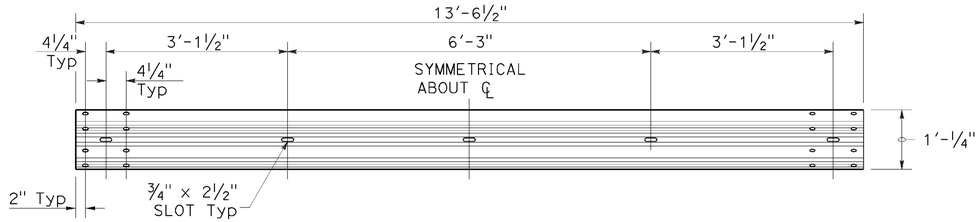

TYPICAL RAIL ELEMENT

NOTE:

1. Slotted holes for splice bolts to overlap ends of rail element.

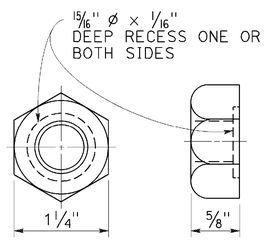

⅝" Ø RECESS NUT

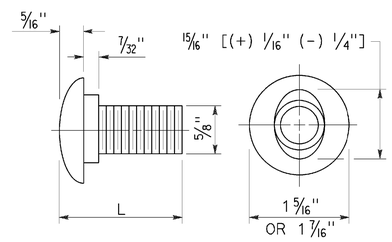

⅝" Ø BUTTON HEAD BOLT

BUTTON HEAD BOLT

L	THREAD LENGTH
1⅜"	FULL THREAD LENGTH
2"	FULL THREAD LENGTH
10"	4" Min THREAD LENGTH
18"	4" Min THREAD LENGTH
20"	4" Min THREAD LENGTH
22"	4" Min THREAD LENGTH
26"	4" Min THREAD LENGTH
36"	4" Min THREAD LENGTH
** 2¾"	2" Min THREAD LENGTH
** 19"	4" Min THREAD LENGTH

** For nested rail applications.

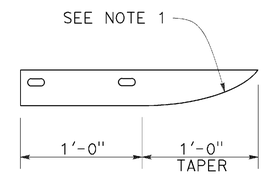

PLAN

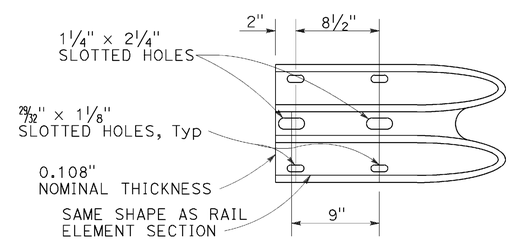

ELEVATION

END CAP
(TYPE A)

STATE OF CALIFORNIA
DEPARTMENT OF TRANSPORTATION

MIDWEST GUARDRAIL SYSTEM STANDARD HARDWARE

NO SCALE

RSP A77M1 DATED JULY 19, 2013 SUPPLEMENTS THE STANDARD PLANS BOOK DATED 2010.

REVISED STANDARD PLAN RSP A77M1

2010 REVISED STANDARD PLAN RSP A77M1

DATE PLOTTED => 28-JUL-2016
TIME PLOTTED => 13:55

Dist	COUNTY	ROUTE	POST MILES TOTAL PROJECT	SHEET No.	TOTAL SHEETS
02	Las, Sie,Las	70, 395	3.5/3.9 R0.0/R3.1,R0.0/R5.6	141	236

Randell D. Hiatt
REGISTERED CIVIL ENGINEER

July 19, 2013
PLANS APPROVAL DATE

REGISTERED PROFESSIONAL ENGINEER
Randell D. Hiatt
No. C50200
Exp. 6-30-15
CIVIL
STATE OF CALIFORNIA

THE STATE OF CALIFORNIA OR ITS OFFICERS OR AGENTS SHALL NOT BE RESPONSIBLE FOR THE ACCURACY OR COMPLETENESS OF SCANNED COPIES OF THIS PLAN SHEET.

TO ACCOMPANY PLANS DATED 06-15-16

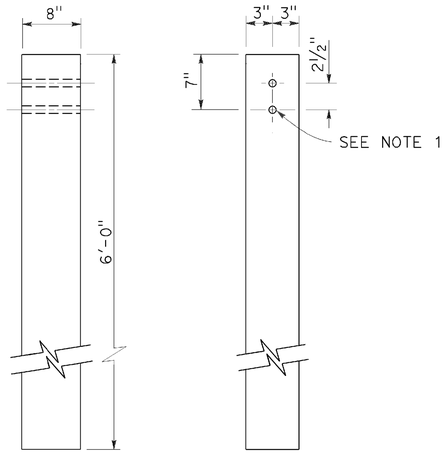

SIDE FRONT

6" x 8" WOOD POST
See Note 3

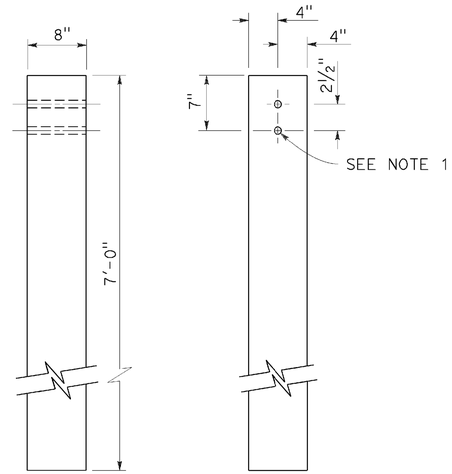

SIDE FRONT

8" x 8" WOOD POST
See Note 4

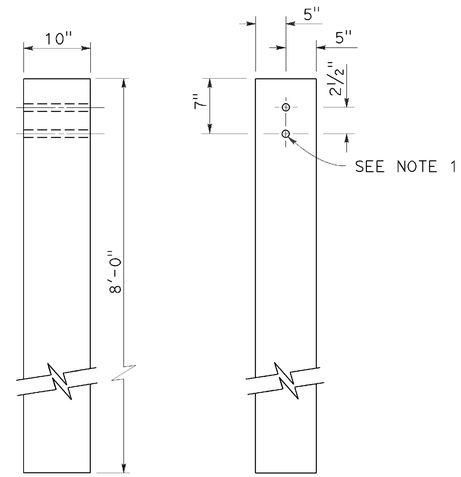

SIDE FRONT

10" x 10" WOOD POST
See Note 5

NOTES:

1. All holes in wood posts and blocks shall be 3/4" Dia ± 1/16".
2. Dimensions shown for wood post are nominal.
3. This post and block combination used for standard line post sections of MGS.
4. This post and 8" x 12" block combination used for line post sections of MGS on narrow roadways.
5. This post and 8" x 12" block combination is typically used where strengthened line post sections of MGS are warranted to shield fixed objects.
6. See Revised Standard Plan RSP A77L3 for use of 6" x 8" and 8" x 8" wood blocks.

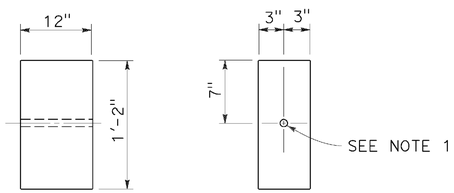

SIDE FRONT

6" x 12" WOOD BLOCK
See Note 3

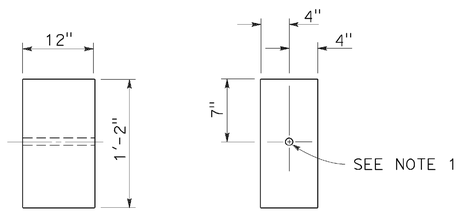

SIDE FRONT

8" x 12" WOOD BLOCK

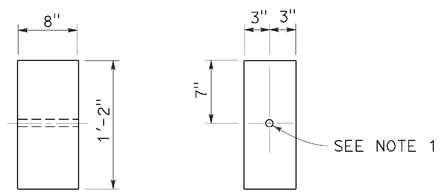

SIDE FRONT

6" x 8" WOOD BLOCK
Only for use with metal beam guard rail see Note 6

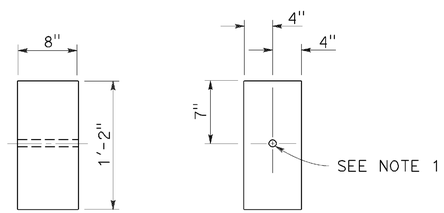

SIDE FRONT

8" x 8" WOOD BLOCK
Only for use with metal beam guard rail see Note 6

STATE OF CALIFORNIA
DEPARTMENT OF TRANSPORTATION

MIDWEST GUARDRAIL SYSTEM WOOD POST AND WOOD BLOCK DETAILS

NO SCALE

RSP A77N1 DATED JULY 19, 2013 SUPPLEMENTS THE STANDARD PLANS BOOK DATED 2010.

REVISED STANDARD PLAN RSP A77N1

2010 REVISED STANDARD PLAN RSP A77N1

DATE PLOTTED => 28-JUL-2016
TIME PLOTTED => 13:56

Dist	COUNTY	ROUTE	POST MILES TOTAL PROJECT	SHEET No.	TOTAL SHEETS
02	Las, Sie,Las	70, 395	3.5/3.9 R0.0/R3.1,R0.0/R5.6	142	236

Randell D. Hiatt
REGISTERED CIVIL ENGINEER

November 15, 2013
PLANS APPROVAL DATE

REGISTERED PROFESSIONAL ENGINEER
Randell D. Hiatt
No. C50200
Exp. 6-30-15
CIVIL
STATE OF CALIFORNIA

THE STATE OF CALIFORNIA OR ITS OFFICERS OR AGENTS SHALL NOT BE RESPONSIBLE FOR THE ACCURACY OR COMPLETENESS OF SCANNED COPIES OF THIS PLAN SHEET.

TO ACCOMPANY PLANS DATED 06-15-16

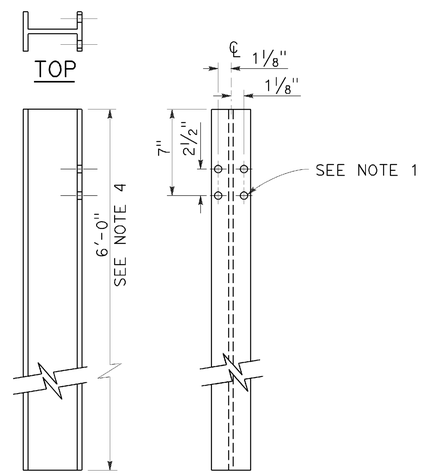

SIDE FRONT

W6 x 9 OR W6 x 8.5
STEEL POST
See Note 4

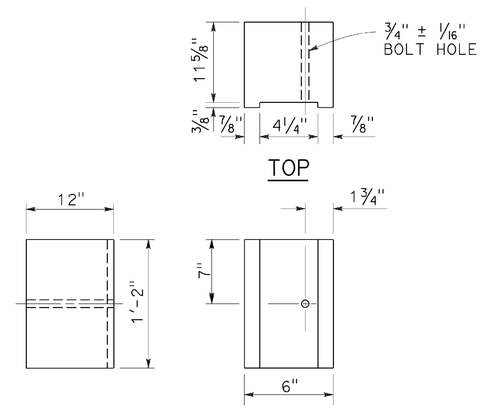

SIDE FRONT

6" x 12"
NOTCHED WOOD BLOCK
See Notes 2 and 3

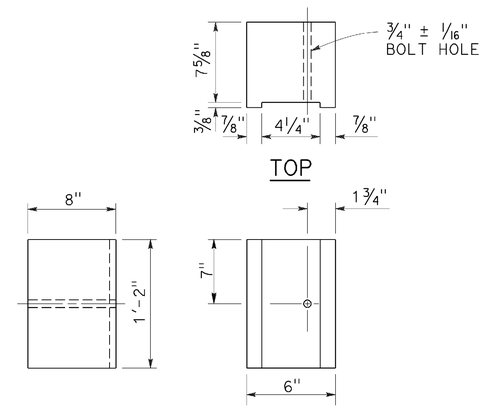

SIDE FRONT

6" x 8"
NOTCHED WOOD BLOCK
Only for use with metal beam guard railing. See Note 5

NOTES:

1. All holes in steel post shall be 13/16" Dia maximum.
2. Dimensions shown for wood block are nominal.
3. Notched face of block faces steel post.
4. 6'-0" length posts to be used for typical roadway installation. See Revised Standard Plan RSP A77N3.
5. See Revised Standard Plan RSP A77L3 for use of 6" x 8" and 8" x 8" notched wood blocks.
6. This post and 8" x 12" block combination to be used for line post sections of MGS on narrow roadways and where strengthened line post sections of MGS are warranted to shield fixed objects.

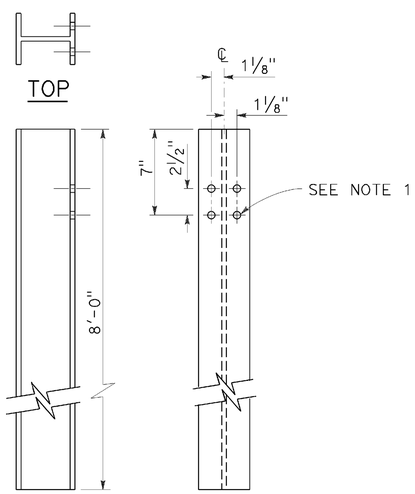

SIDE FRONT

W6 x 15
STEEL POST
See Note 6

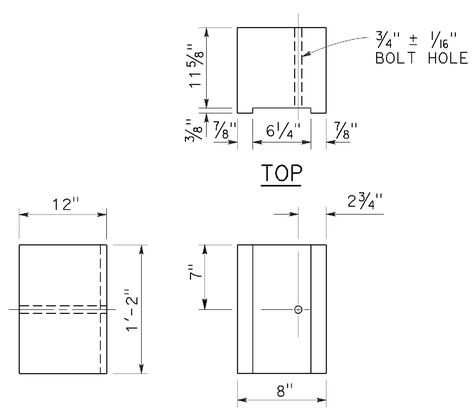

SIDE FRONT

8" x 12"
NOTCHED WOOD BLOCK
See Notes 2 and 3

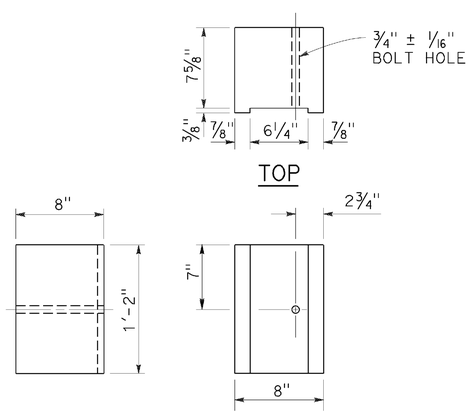

SIDE FRONT

8" x 8"
NOTCHED WOOD BLOCK
Only for use with metal beam guard railing. See Note 5

STATE OF CALIFORNIA
DEPARTMENT OF TRANSPORTATION

MIDWEST GUARDRAIL SYSTEM STEEL POST AND NOTCHED WOOD BLOCK DETAILS

NO SCALE

RSP A77N2 DATED NOVEMBER 15, 2013 SUPERSEDES RSP A77N2
DATED JULY 19, 2013 THAT SUPPLEMENTS THE STANDARD PLANS BOOK DATED 2010.

REVISED STANDARD PLAN RSP A77N2

2010 REVISED STANDARD PLAN RSP A77N2

DATE PLOTTED => 28-JUL-2016
TIME PLOTTED => 13:56

Dist	COUNTY	ROUTE	POST MILES TOTAL PROJECT	SHEET No.	TOTAL SHEETS
02	Las, Sie,Las	70, 395	3.5/3.9 R0.0/R3.1,R0.0/R5.6	143	236

Randell D. Hiatt
REGISTERED CIVIL ENGINEER

November 15, 2013
PLANS APPROVAL DATE

REGISTERED PROFESSIONAL ENGINEER
Randell D. Hiatt
No. C50200
Exp. 6-30-15
CIVIL
STATE OF CALIFORNIA

THE STATE OF CALIFORNIA OR ITS OFFICERS OR AGENTS SHALL NOT BE RESPONSIBLE FOR THE ACCURACY OR COMPLETENESS OF SCANNED COPIES OF THIS PLAN SHEET.

TO ACCOMPANY PLANS DATED 06-15-16

2010 REVISED STANDARD PLAN RSP A77N3

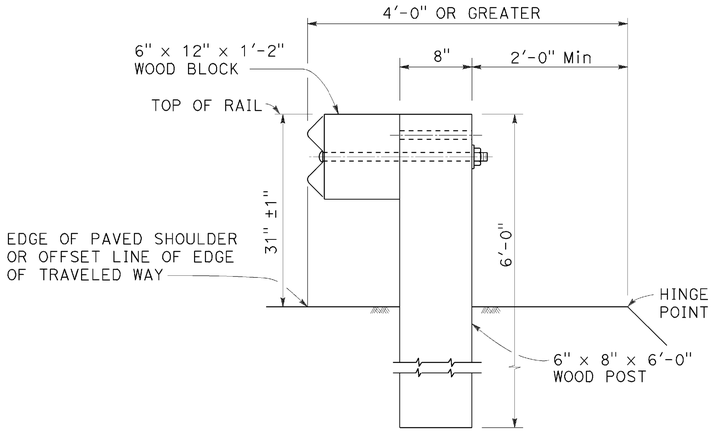

DETAIL A
TYPICAL ROADWAY INSTALLATION
See Note 1

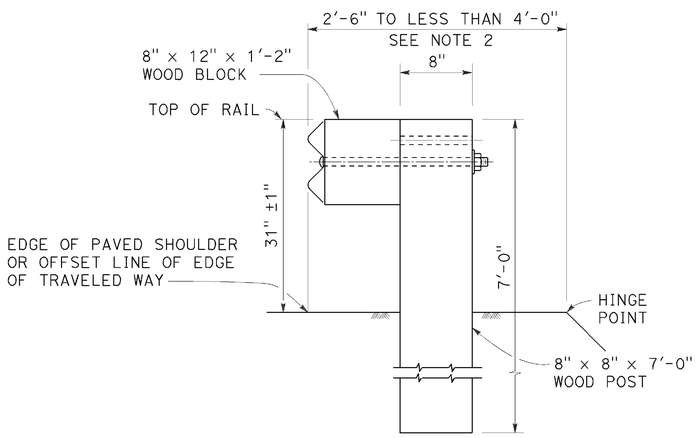

DETAIL B
NARROW ROADWAY INSTALLATION
See Note 1

POST EMBEDMENT

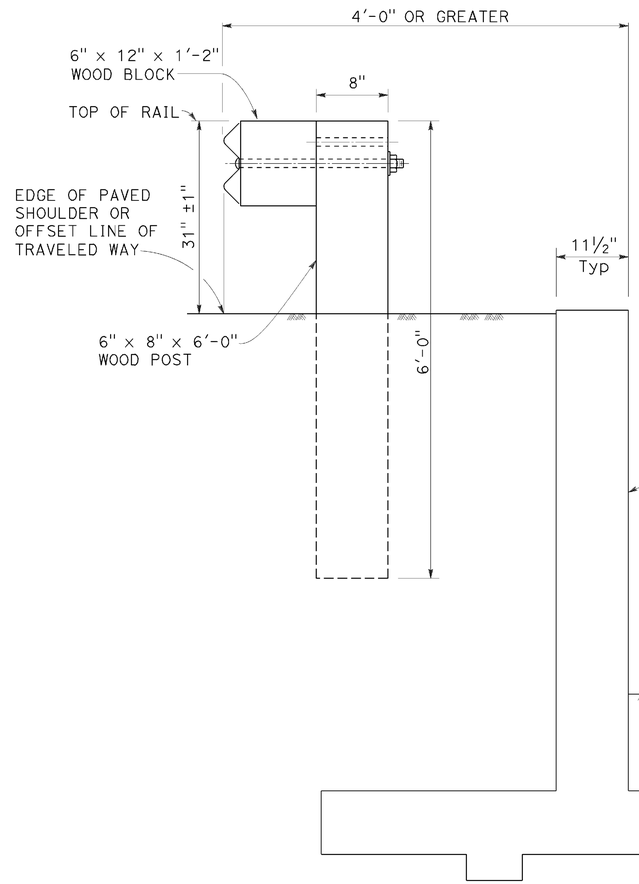

DETAIL C

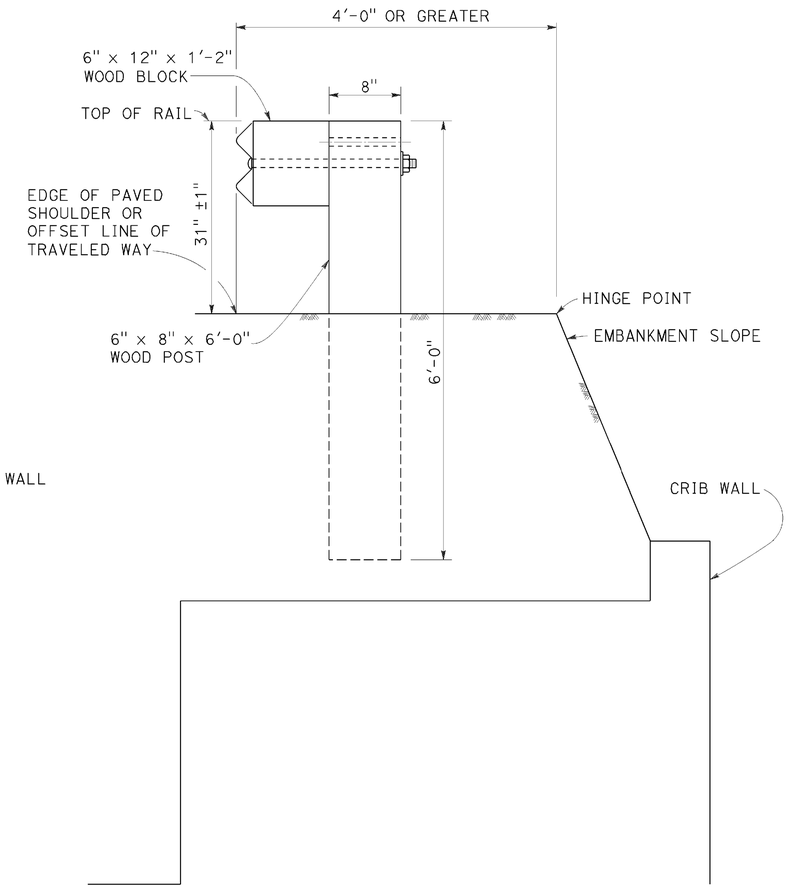

DETAIL D

INSTALLATION AT EARTH RETAINING WALLS

NOTES:

1. These installation details also applicable to steel line post installations. For Detail A, C, and D, where steel line post installations are constructed, W6 x 8.5 or W6 x 9 steel post, 6'-0" in length, with 6" x 12" x 1'-2" notched wood blocks or notched recycled plastic blocks are to be used in place of the size of wood post and wood block shown. For Detail B, where steel line post installations are constructed, W6 x 15 steel post, 8'-0" in length, with 8" x 12" x 1'-2" notched wood blocks or notched recycled plastic blocks are to be used in place of the size of wood post and wood block shown. For additional installation details, see Revised Standard Plan RSP A77L1 and RSP A77L2.
2. Where the distance between the face of the rail and the hinge point is less than 2'-6", see the Project Plans for special details.
3. For dike positioning with MGS installations, see Revised Standard Plan RSP A77N4.

STATE OF CALIFORNIA
DEPARTMENT OF TRANSPORTATION

MIDWEST GUARDRAIL SYSTEM TYPICAL LINE POST EMBEDMENT AND HINGE POINT OFFSET DETAILS

NO SCALE

RSP A77N3 DATED NOVEMBER 15, 2013 SUPERSEDES RSP A77N3 DATED JULY 19, 2013 THAT SUPPLEMENTS THE STANDARD PLANS BOOK DATED 2010.

REVISED STANDARD PLAN RSP A77N3

DATE PLOTTED => 28-JUL-2016
TIME PLOTTED => 13:56

Dist	COUNTY	ROUTE	POST MILES TOTAL PROJECT	SHEET No.	TOTAL SHEETS
02	Las, Sie,Las	70, 395	3.5/3.9 R0.0/R3.1,R0.0/R5.6	144	236

Randell D. Hiatt
REGISTERED CIVIL ENGINEER

July 19, 2013
PLANS APPROVAL DATE

REGISTERED PROFESSIONAL ENGINEER
Randell D. Hiatt
No. C50200
Exp. 6-30-15
CIVIL
STATE OF CALIFORNIA

THE STATE OF CALIFORNIA OR ITS OFFICERS OR AGENTS SHALL NOT BE RESPONSIBLE FOR THE ACCURACY OR COMPLETENESS OF SCANNED COPIES OF THIS PLAN SHEET.

TO ACCOMPANY PLANS DATED 06-15-16

NOTES:

1. When necessary to place dike more than 7" in front of face of MGS, only Type C dike may be used. For dike details, see Revised Standard Plan RSP A87B.
2. For standard railing post embedment, see Revised Standard Plan RSP A77N3.
3. MGS delineation to be used where shown on the Project Plans.
4. When dike or curb is placed under MGS, the maximum height of the dike or curb shall be 6". Mountable dike should not be used. For dike and curb details, see Revised Standard Plans RSP A87A and RSP A87B.
5. For details of typical distance between the face of rail and hinge point, see Revised Standard Plan RSP A77N3.
6. For steel line posts, use 1/4 - 20 self-tapping screws in 0.22" diameter holes or 1/4" bolts in 9/32" diameter holes.

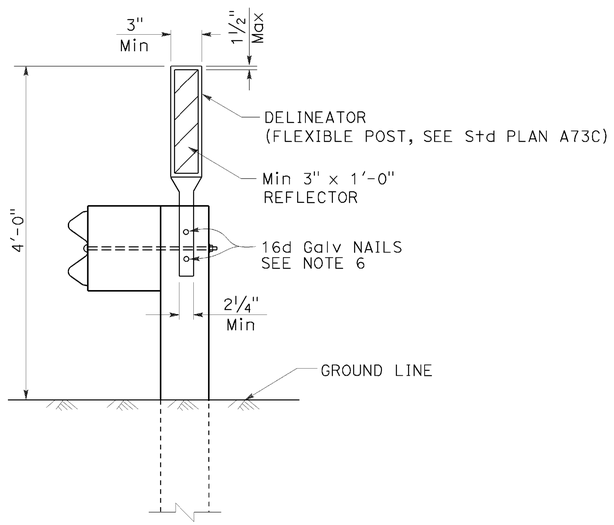

MGS DELINEATION

See Note 3

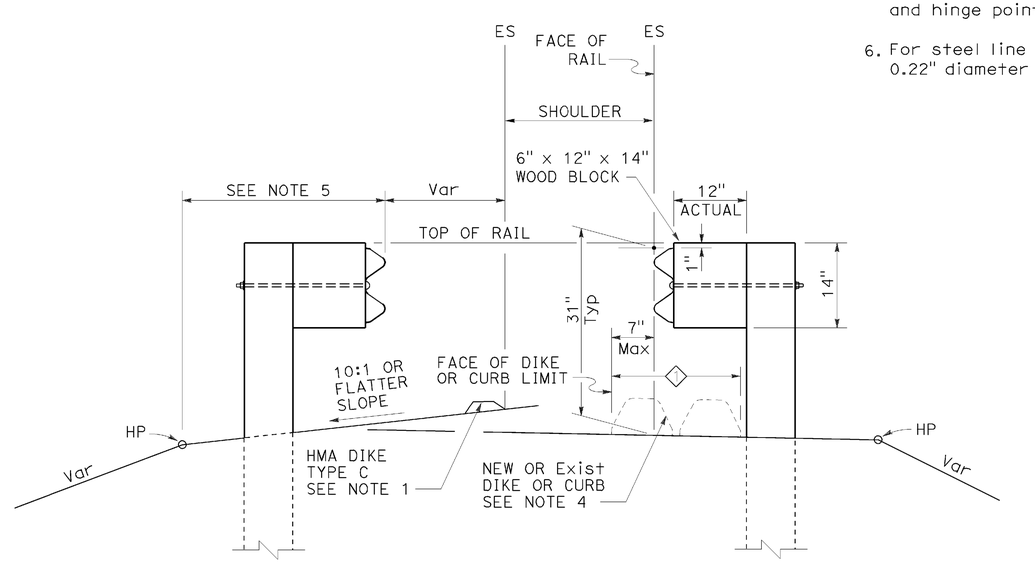

DIKE POSITIONING

See Note 1

1 PERMISSIBLE DIKE OR CURB PLACEMENT AREA

STATE OF CALIFORNIA
DEPARTMENT OF TRANSPORTATION

MIDWEST GUARDRAIL SYSTEM TYPICAL RAILING DELINEATION AND DIKE POSITIONING DETAILS

NO SCALE

RSP A77N4 DATED JULY 19, 2013 SUPPLEMENTS THE STANDARD PLANS BOOK DATED 2010.

REVISED STANDARD PLAN RSP A77N4

2010 REVISED STANDARD PLAN RSP A77N4

DATE PLOTTED => 28-JUL-2016
TIME PLOTTED => 13:57

Dist	COUNTY	ROUTE	POST MILES TOTAL PROJECT	SHEET No.	TOTAL SHEETS
02	Las, Sie,Las	70, 395	3.5/3.9 R0.0/R3.1,R0.0/R5.6	145	236

Randell D. Hiatt
REGISTERED CIVIL ENGINEER

July 19, 2013
PLANS APPROVAL DATE

REGISTERED PROFESSIONAL ENGINEER
Randell D. Hiatt
No. C50200
Exp. 6-30-15
CIVIL
STATE OF CALIFORNIA

THE STATE OF CALIFORNIA OR ITS OFFICERS OR AGENTS SHALL NOT BE RESPONSIBLE FOR THE ACCURACY OR COMPLETENESS OF SCANNED COPIES OF THIS PLAN SHEET.

TO ACCOMPANY PLANS DATED 06-15-16

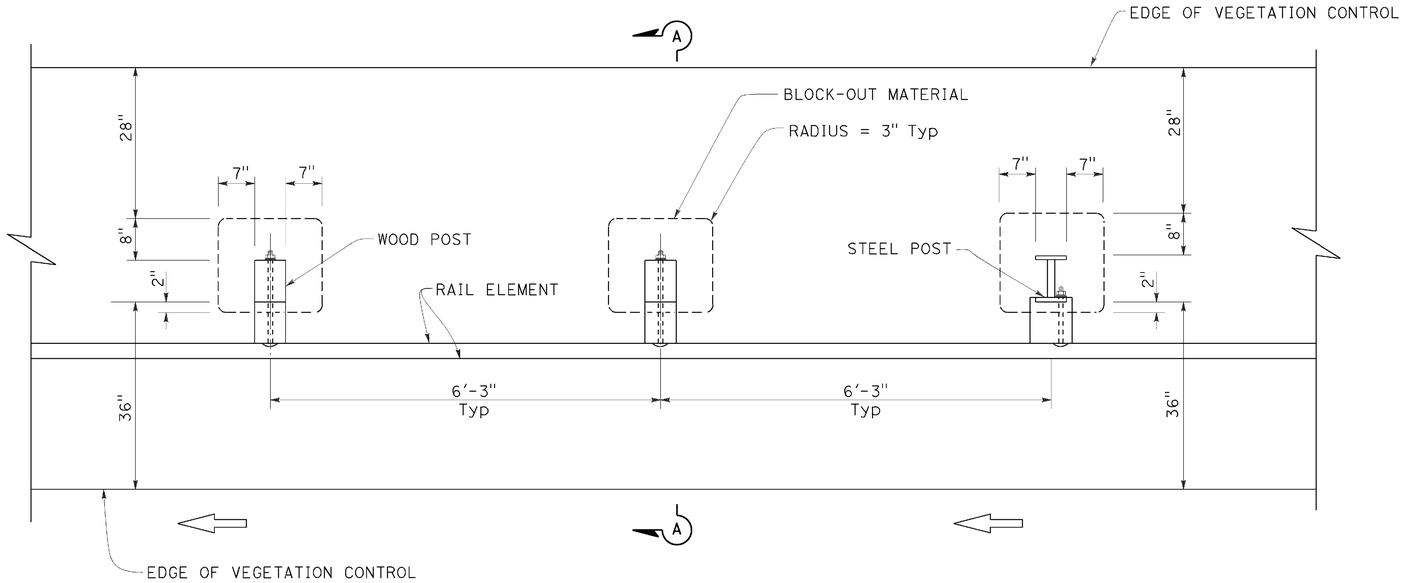

PLAN

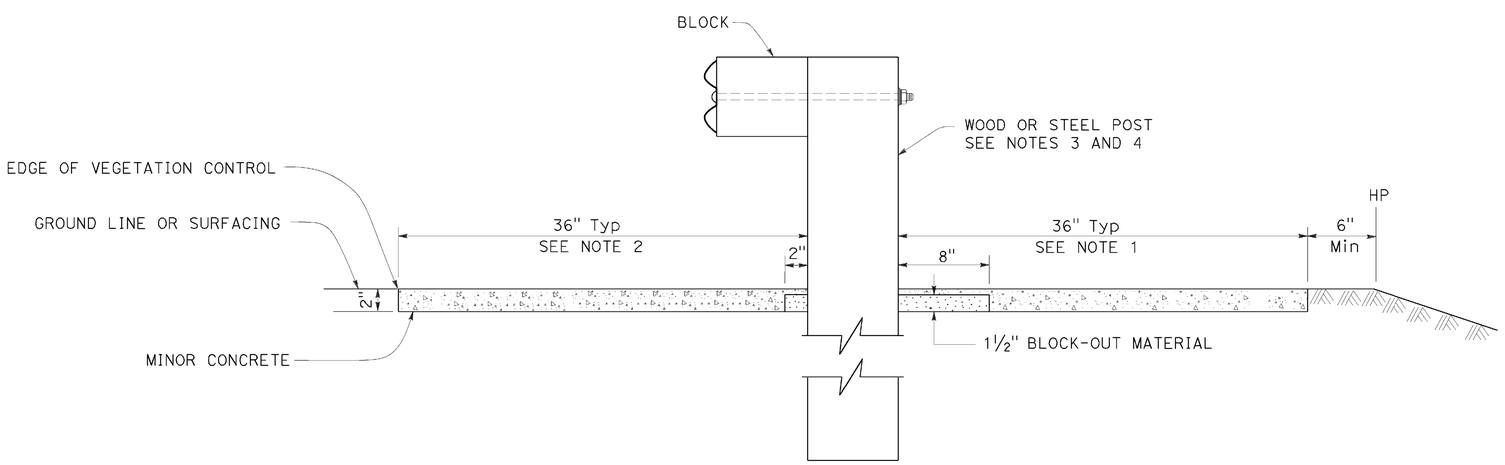

SECTION A-A

NOTES:

1. Where the distance between back of post and hinge point is less than 42", construct vegetation control to 6" from hinge point while maintaining the 8" block-out at back of post. If the 8" block-out at back of post can not be maintained, construct vegetation control flush with the back edge of post.
2. Where dike is constructed under railing, construct vegetation control to back edge of dike. Where paved shoulder is constructed within 36" in front of the post, construct vegetation control to the edge of paved shoulder.
3. For wood post sizes, see Revised Standard Plan RSP A77N1.
4. For steel post sizes, see Revised Standard Plan RSP A77N2.
5. For details not shown, see Revised Standard Plans RSP A77L1 and RSP A77L2.

STATE OF CALIFORNIA
DEPARTMENT OF TRANSPORTATION

MIDWEST GUARDRAIL SYSTEM TYPICAL VEGETATION CONTROL STANDARD RAILING SECTION

NO SCALE

RSP A77N5 DATED JULY 19, 2013 SUPPLEMENTS THE STANDARD PLANS BOOK DATED 2010.

REVISED STANDARD PLAN RSP A77N5

2010 REVISED STANDARD PLAN RSP A77N5

DATE PLOTTED => 28-JUL-2016
TIME PLOTTED => 13:57

Dist	COUNTY	ROUTE	POST MILES TOTAL PROJECT	SHEET No.	TOTAL SHEETS
02	Las, Sie,Las	70, 395	3.5/3.9 R0.0/R3.1,R0.0/R5.6	146	236

Randell D. Hiatt
REGISTERED CIVIL ENGINEER

July 19, 2013
PLANS APPROVAL DATE

REGISTERED PROFESSIONAL ENGINEER
Randell D. Hiatt
No. C50200
Exp. 6-30-15
CIVIL
STATE OF CALIFORNIA

THE STATE OF CALIFORNIA OR ITS OFFICERS OR AGENTS SHALL NOT BE RESPONSIBLE FOR THE ACCURACY OR COMPLETENESS OF SCANNED COPIES OF THIS PLAN SHEET.

TO ACCOMPANY PLANS DATED 06-15-16

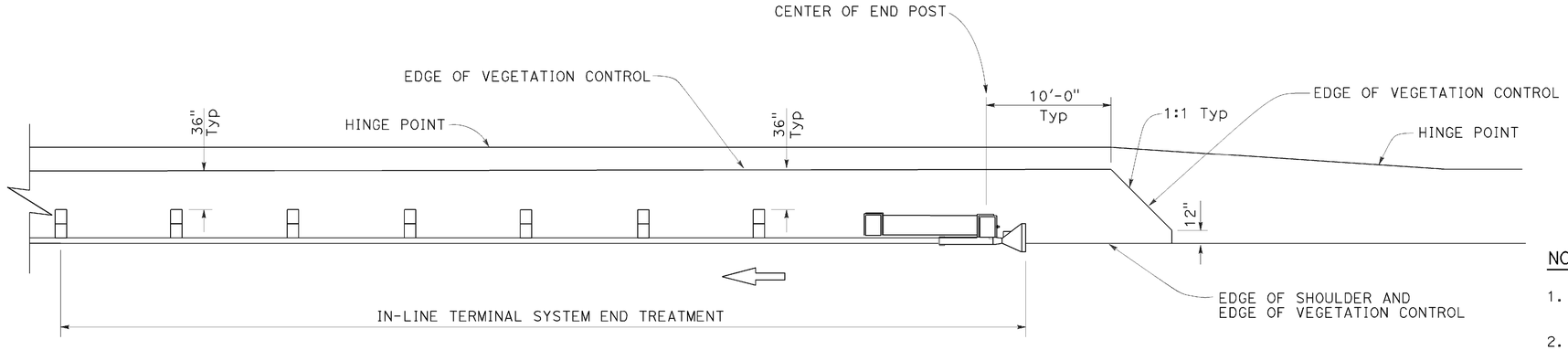

PLAN

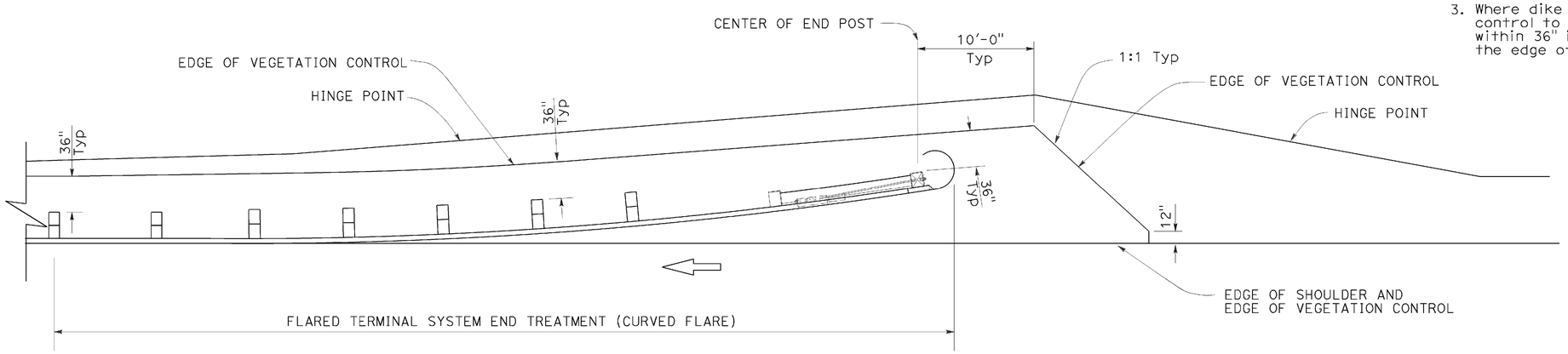

PLAN

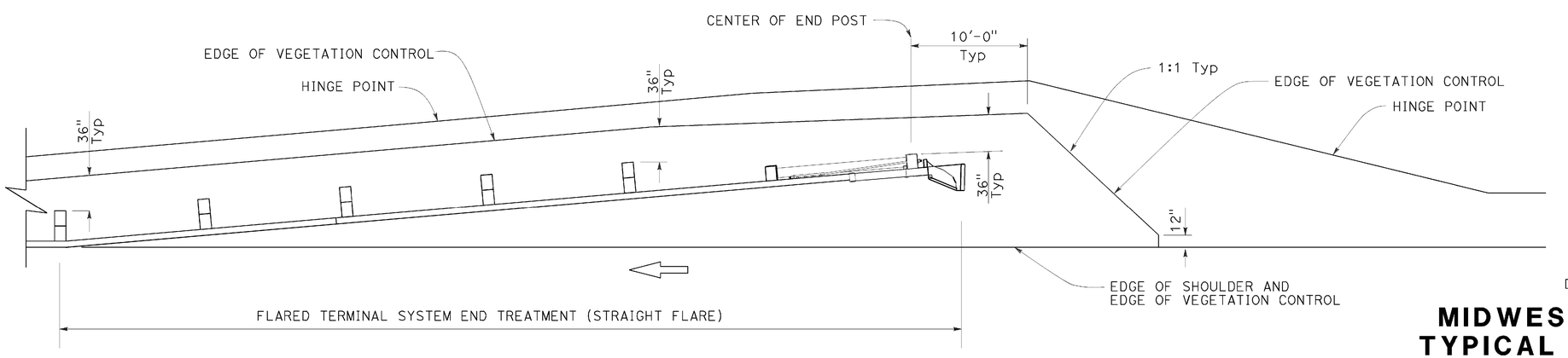

PLAN

NOTES:

1. See Revised Standard Plan RSP A77N5 for additional vegetation control details.
2. Where the distance between back of post and hinge point is less than 42", construct vegetation control to 6" from hinge point while maintaining the 8" block-out at back of post. If the 8" block-out at back of post can not be maintained, construct vegetation control flush with the back edge of post.
3. Where dike is constructed under railing, construct vegetation control to back edge of dike. Where paved shoulder is constructed within 36" in front of the post, construct vegetation control to the edge of paved shoulder.

STATE OF CALIFORNIA
DEPARTMENT OF TRANSPORTATION

MIDWEST GUARDRAIL SYSTEM TYPICAL VEGETATION CONTROL FOR TERMINAL SYSTEM END TREATMENTS

NO SCALE

RSP A77N6 DATED JULY 19, 2013 SUPPLEMENTS THE STANDARD PLANS BOOK DATED 2010.

REVISED STANDARD PLAN RSP A77N6

2010 REVISED STANDARD PLAN RSP A77N6

DATE PLOTTED => 28-JUL-2016
TIME PLOTTED => 13:58

Dist	COUNTY	ROUTE	POST MILES TOTAL PROJECT	SHEET No.	TOTAL SHEETS
02	Las, Sie,Las	70, 395	3.5/3.9 R0.0/R3.1,R0.0/R5.6	147	236

Randell D. Hiatt
REGISTERED CIVIL ENGINEER

July 19, 2013
PLANS APPROVAL DATE

REGISTERED PROFESSIONAL ENGINEER
Randell D. Hiatt
No. C50200
Exp. 6-30-15
CIVIL
STATE OF CALIFORNIA

THE STATE OF CALIFORNIA OR ITS OFFICERS OR AGENTS SHALL NOT BE RESPONSIBLE FOR THE ACCURACY OR COMPLETENESS OF SCANNED COPIES OF THIS PLAN SHEET.

TO ACCOMPANY PLANS DATED 06-15-16

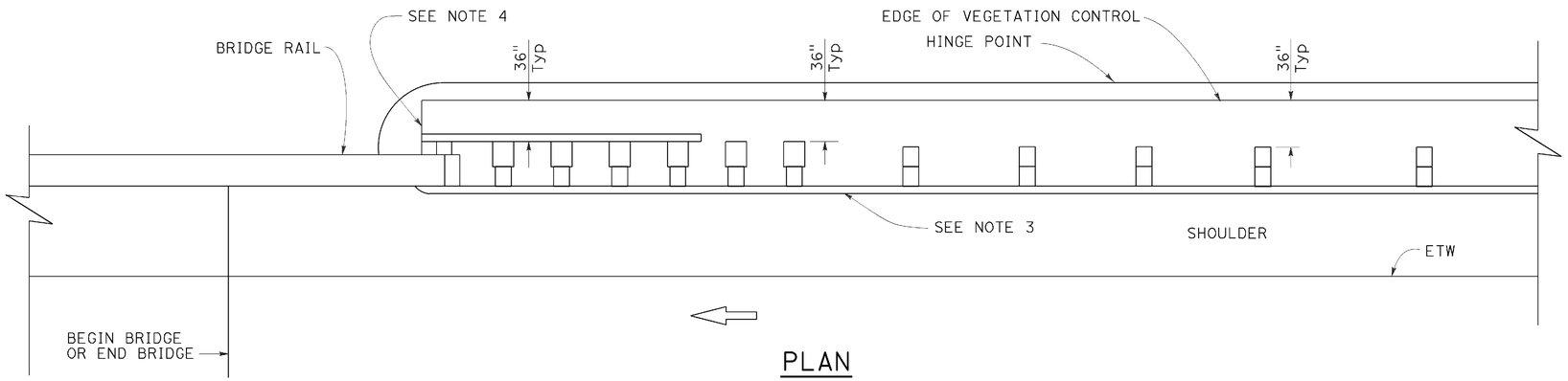

PLAN

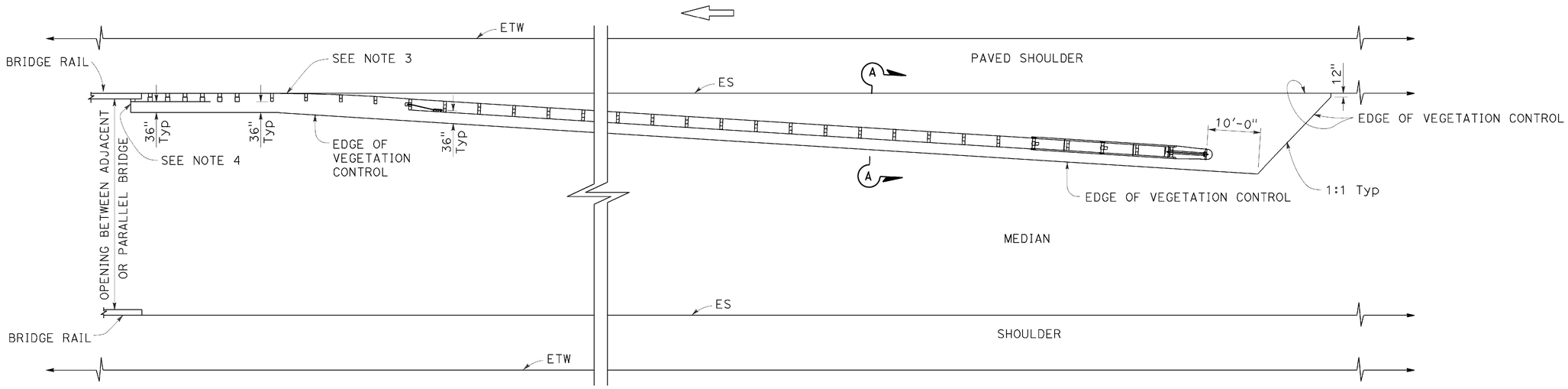

PLAN

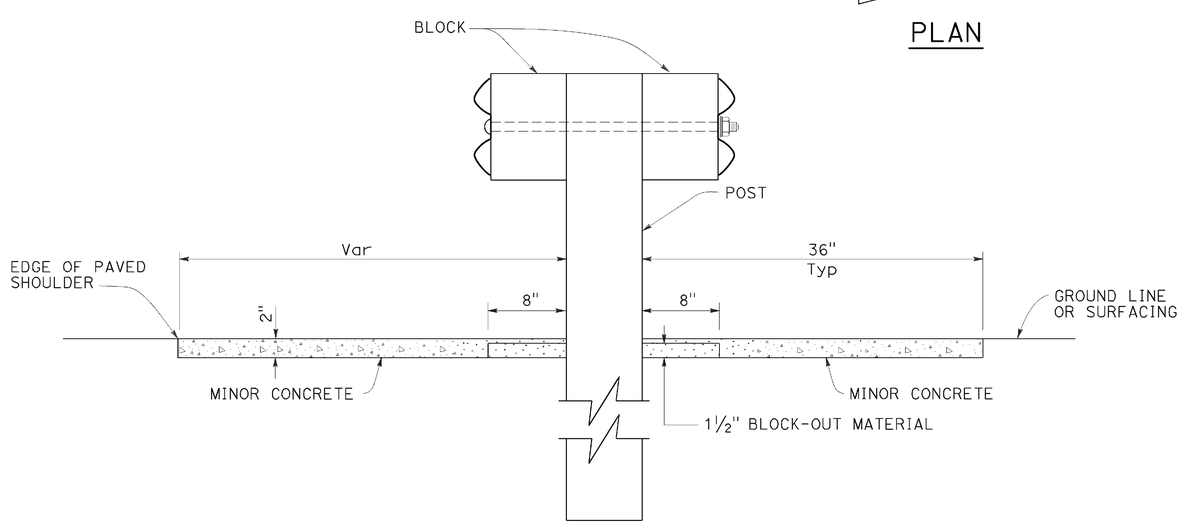

SECTION A-A

NOTES:

1. See Revised Standard Plan RSP A77N5 for additional vegetation control details.
2. Where the distance between back of post and hinge point is less than 42", construct vegetation control to 6" from hinge point while maintaining the 8" block-out at back of post. If the 8" block-out at back of post can not be maintained, construct vegetation control flush with the back edge of post.
3. Where dike is constructed under railing, construct vegetation control to back edge of dike. Where paved shoulder is constructed within 36" in front of the post, construct vegetation control to the edge of paved shoulder.
4. End vegetation control at end of backside rail element.

STATE OF CALIFORNIA
DEPARTMENT OF TRANSPORTATION

MIDWEST GUARDRAIL SYSTEM TYPICAL VEGETATION CONTROL AT STRUCTURE APPROACH

NO SCALE

RSP A77N7 DATED JULY 19, 2013 SUPPLEMENTS THE STANDARD PLANS BOOK DATED 2010.

REVISED STANDARD PLAN RSP A77N7

2010 REVISED STANDARD PLAN RSP A77N7

DATE PLOTTED => 28-JUL-2016
TIME PLOTTED => 13:58

Dist	COUNTY	ROUTE	POST MILES TOTAL PROJECT	SHEET No.	TOTAL SHEETS
02	Las, Sie,Las	70, 395	3.5/3.9 R0.0/R3.1,R0.0/R5.6	148	236

Randell D. Hiatt
REGISTERED CIVIL ENGINEER

July 19, 2013
PLANS APPROVAL DATE

REGISTERED PROFESSIONAL ENGINEER
Randell D. Hiatt
No. C50200
Exp. 6-30-15
CIVIL
STATE OF CALIFORNIA

THE STATE OF CALIFORNIA OR ITS OFFICERS OR AGENTS SHALL NOT BE RESPONSIBLE FOR THE ACCURACY OR COMPLETENESS OF SCANNED COPIES OF THIS PLAN SHEET.

TO ACCOMPANY PLANS DATED 06-15-16

NOTES:

1. See Revised Standard Plan RSP A77N5 for additional vegetation control details.
2. Where the distance between back of post and hinge point is less than 42", construct vegetation control to 6" from hinge point while maintaining the 8" block-out at back of post. If the 8" block-out at back of post can not be maintained, construct vegetation control flush with the back edge of post.
3. Where dike is constructed under railing, construct vegetation control to back edge of dike. Where paved shoulder is constructed within 36" in front of the post, construct vegetation control to the edge of paved shoulder.

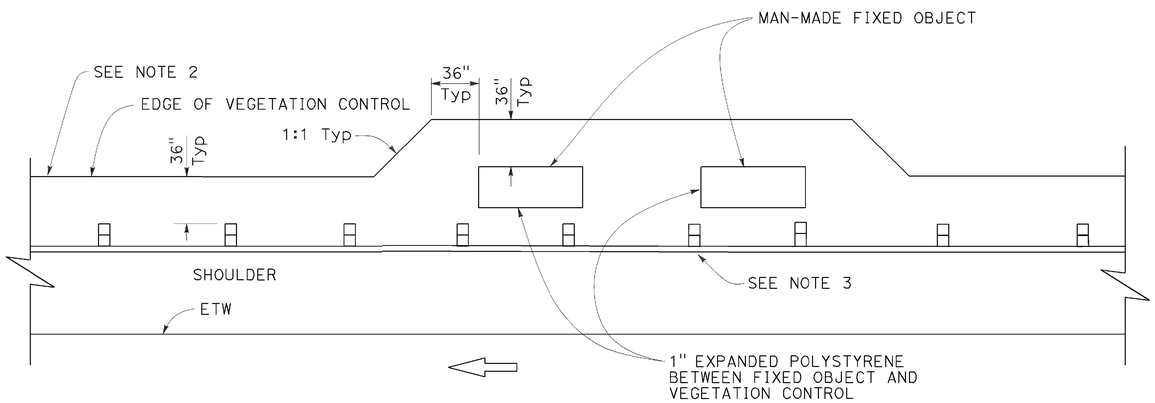

PLAN

Fixed object(s) on shoulder

STATE OF CALIFORNIA
DEPARTMENT OF TRANSPORTATION

MIDWEST GUARDRAIL SYSTEM TYPICAL VEGETATION CONTROL AT FIXED OBJECT

NO SCALE

RSP A77N8 DATED JULY 19, 2013 SUPPLEMENTS THE STANDARD PLANS BOOK DATED 2010.

REVISED STANDARD PLAN RSP A77N8

2010 REVISED STANDARD PLAN RSP A77N8

DATE PLOTTED => 28-JUL-2016
TIME PLOTTED => 13:59

Dist	COUNTY	ROUTE	POST MILES TOTAL PROJECT	SHEET No.	TOTAL SHEETS
02	Las, Sie,Las	70, 395	3.5/3.9 R0.0/R3.1,R0.0/R5.6	149	236

Randell D. Hiatt
REGISTERED CIVIL ENGINEER

July 19, 2013
PLANS APPROVAL DATE

REGISTERED PROFESSIONAL ENGINEER
Randell D. Hiatt
No. C50200
Exp. 6-30-15
CIVIL
STATE OF CALIFORNIA

THE STATE OF CALIFORNIA OR ITS OFFICERS OR AGENTS SHALL NOT BE RESPONSIBLE FOR THE ACCURACY OR COMPLETENESS OF SCANNED COPIES OF THIS PLAN SHEET.

TO ACCOMPANY PLANS DATED 06-15-16

2010 REVISED STANDARD PLAN RSP A77N9

NOTES:

1. See Revised Standard Plan RSP A77N5 for additional vegetation control details.
2. Where dike is constructed under railing, construct vegetation control to back edge of dike. Where paved shoulder is constructed within 36" in front of the post, construct vegetation control to the edge of paved shoulder.

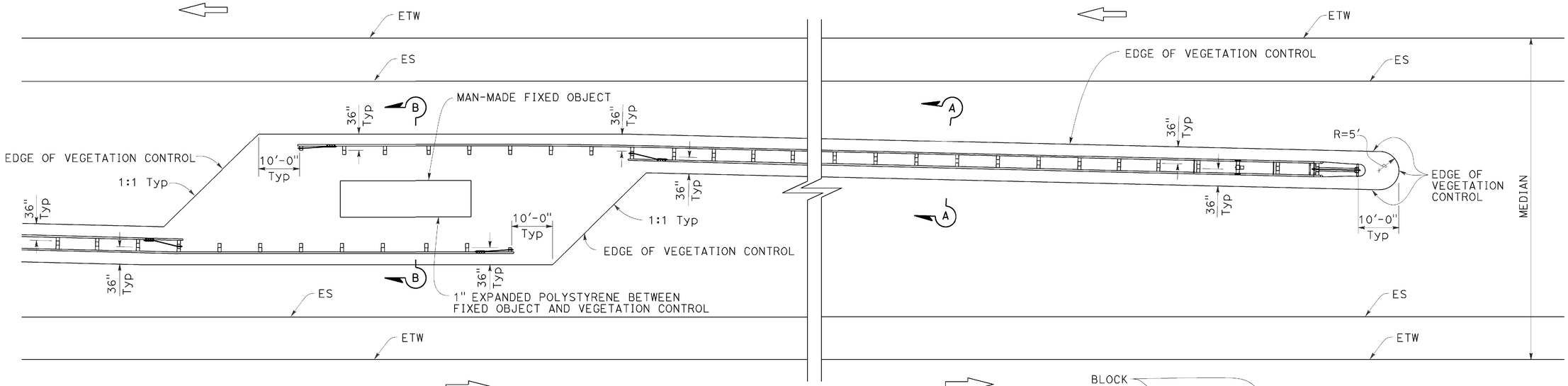

PLAN

Fixed object(s) in median

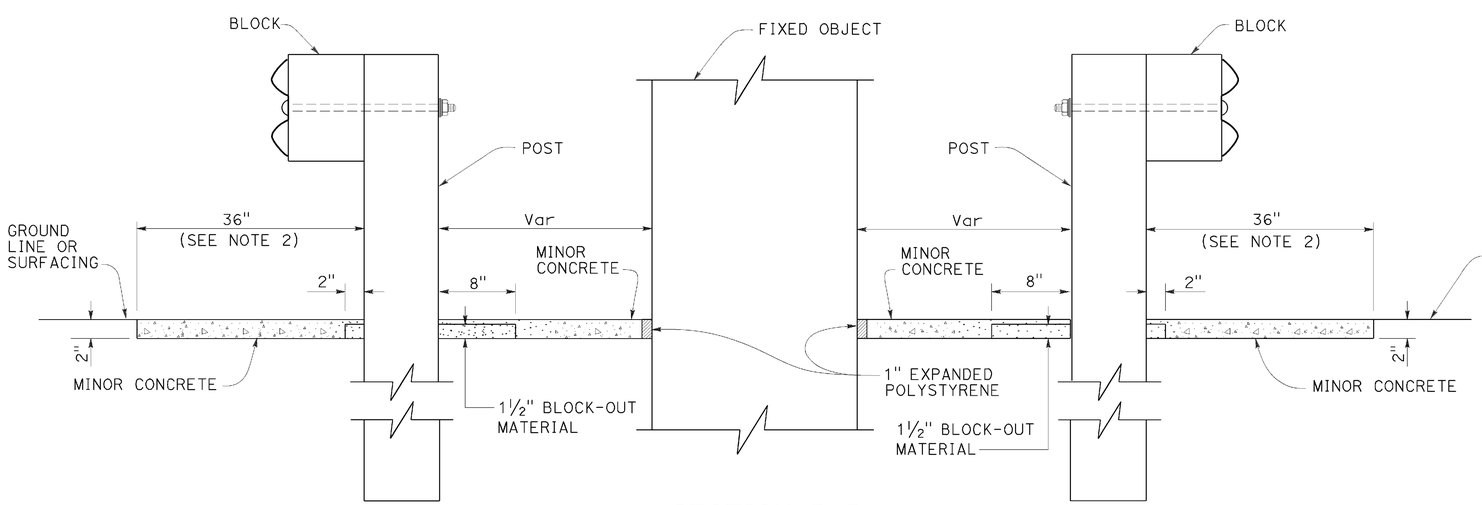

SECTION B-B

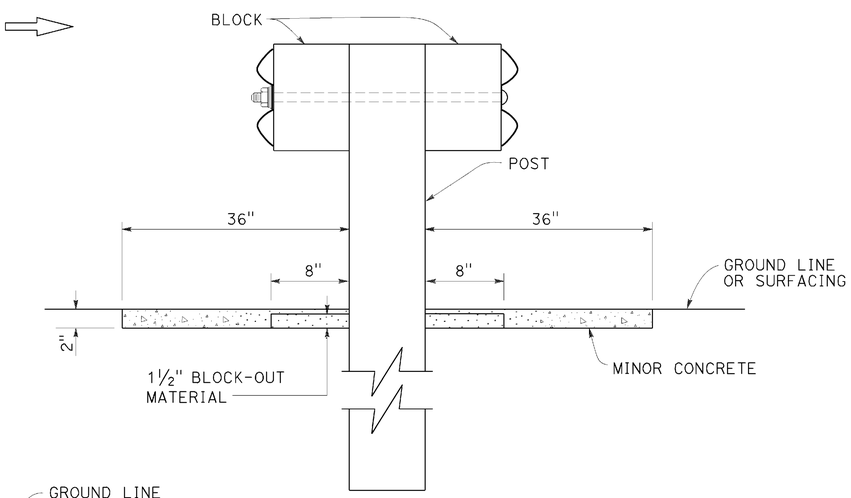

SECTION A-A

STATE OF CALIFORNIA
DEPARTMENT OF TRANSPORTATION

MIDWEST GUARDRAIL SYSTEM TYPICAL VEGETATION CONTROL AT FIXED OBJECT

NO SCALE

RSP A77N9 DATED JULY 19, 2013 SUPPLEMENTS THE STANDARD PLANS BOOK DATED 2010.

REVISED STANDARD PLAN RSP A77N9

DATE PLOTTED => 28-JUL-2016
TIME PLOTTED => 13:59

Dist	COUNTY	ROUTE	POST MILES TOTAL PROJECT	SHEET No.	TOTAL SHEETS
02	Las, Sie,Las	70, 395	3.5/3.9 R0.0/R3.1,R0.0/R5.6	150	236

Randell D. Hiatt
REGISTERED CIVIL ENGINEER

July 19, 2013
PLANS APPROVAL DATE

REGISTERED PROFESSIONAL ENGINEER Randell D. Hiatt No. C50200 Exp. 6-30-15 CIVIL STATE OF CALIFORNIA

THE STATE OF CALIFORNIA OR ITS OFFICERS OR AGENTS SHALL NOT BE RESPONSIBLE FOR THE ACCURACY OR COMPLETENESS OF SCANNED COPIES OF THIS PLAN SHEET.

TO ACCOMPANY PLANS DATED 06-15-16

2010 REVISED STANDARD PLAN RSP A77N10

NOTES:

1. See Revised Standard Plan RSP A77N5 for additional vegetation control details.
2. Where dike is constructed under railing, construct vegetation control to back edge of dike. Where paved shoulder is constructed within 36" in front of the post, construct vegetation control to the edge of paved shoulder.

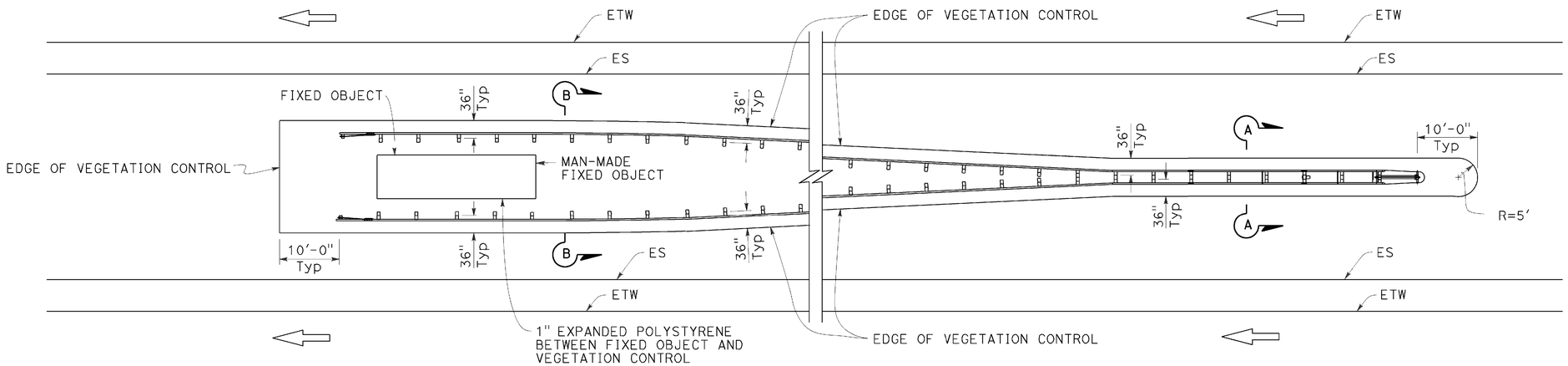

PLAN

Fixed object(s) between separate roadbeds
(One-Way Traffic)

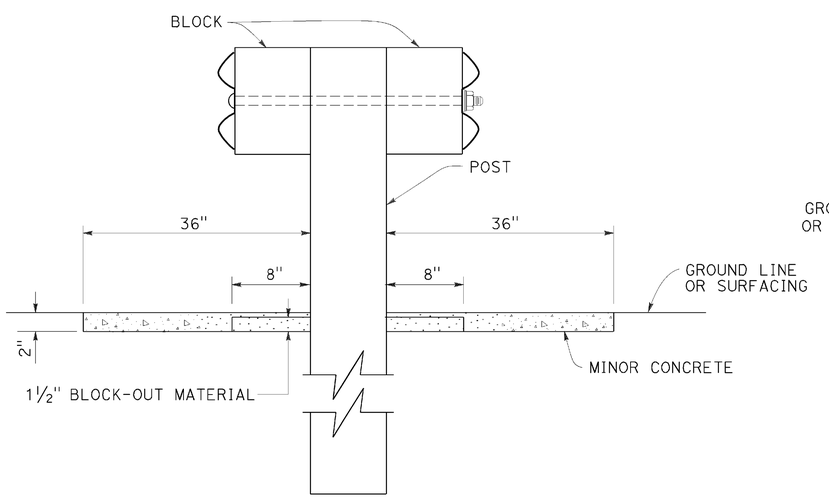

SECTION A-A

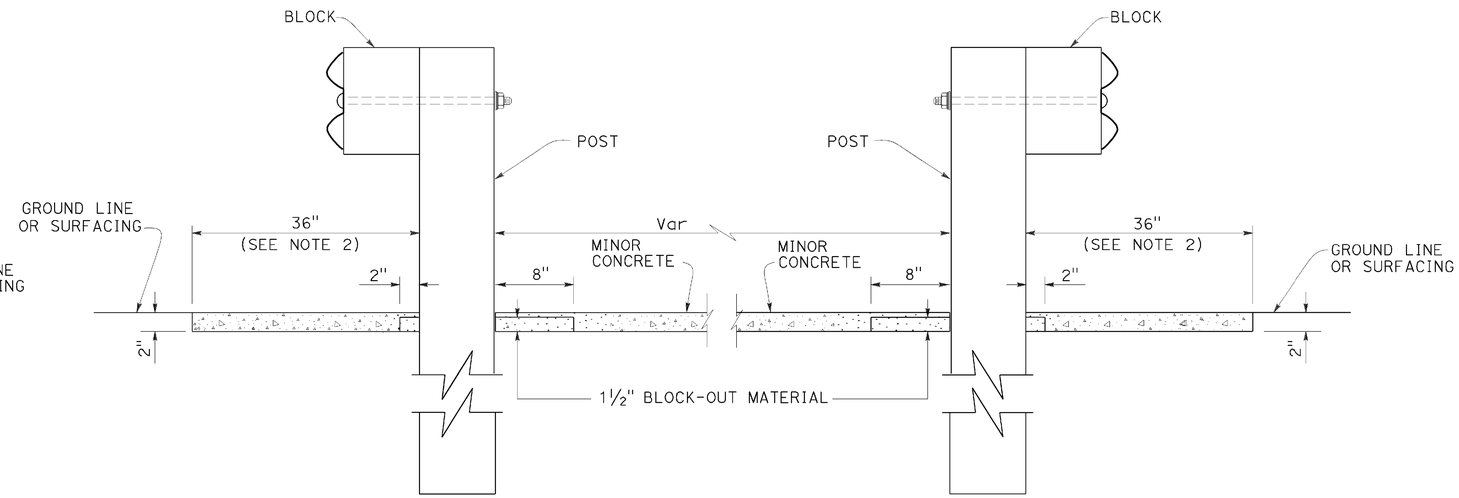

SECTION B-B

STATE OF CALIFORNIA
DEPARTMENT OF TRANSPORTATION

MIDWEST GUARDRAIL SYSTEM TYPICAL VEGETATION CONTROL AT FIXED OBJECT

NO SCALE

RSP A77N10 DATED JULY 19, 2013 SUPPLEMENTS THE STANDARD PLANS BOOK DATED 2010.

REVISED STANDARD PLAN RSP A77N10

DATE PLOTTED => 28-JUL-2016
TIME PLOTTED => 14:00

Dist	COUNTY	ROUTE	POST MILES TOTAL PROJECT	SHEET No.	TOTAL SHEETS
02	Las, Sie,Las	70, 395	3.5/3.9 R0.0/R3.1,R0.0/R5.6	151	236

Randell D. Hiatt
REGISTERED CIVIL ENGINEER

August 14, 2015
PLANS APPROVAL DATE

REGISTERED PROFESSIONAL ENGINEER
Randell D. Hiatt
No. C50200
Exp. 6-30-17
CIVIL
STATE OF CALIFORNIA

THE STATE OF CALIFORNIA OR ITS OFFICERS OR AGENTS SHALL NOT BE RESPONSIBLE FOR THE ACCURACY OR COMPLETENESS OF SCANNED COPIES OF THIS PLAN SHEET.

TO ACCOMPANY PLANS DATED 06-15-16

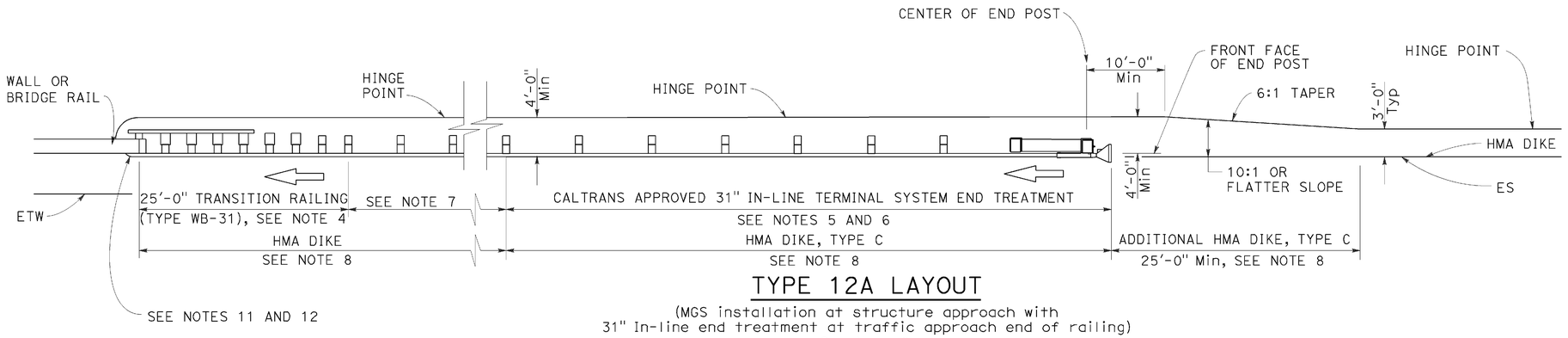

TYPE 12A LAYOUT

(MGS installation at structure approach with
31" In-line end treatment at traffic approach end of railing)
See Note 9

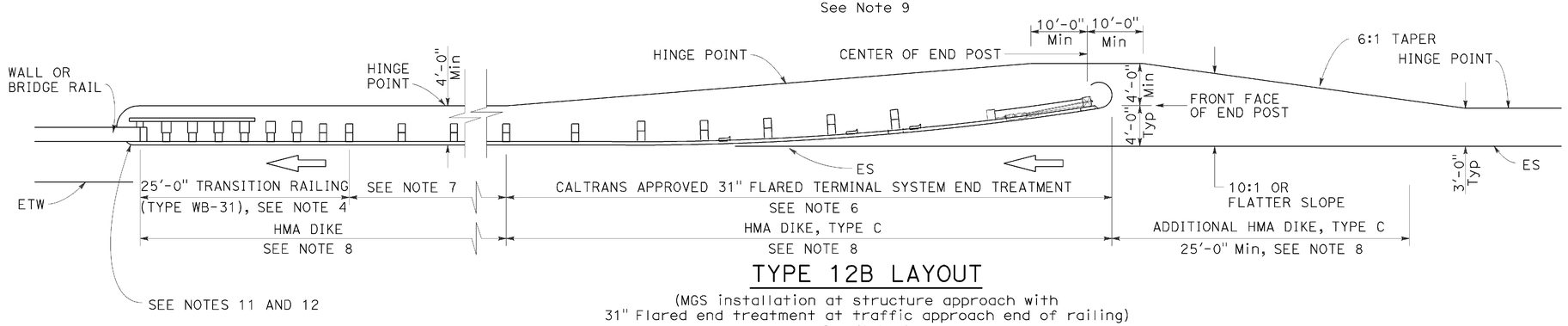

TYPE 12B LAYOUT

(MGS installation at structure approach with
31" Flared end treatment at traffic approach end of railing)
See Note 9

NOTES:

1. Line post, blocks and hardware to be used are shown on Revised Standard Plans RSP A77L1, RSP A77L2, RSP A77M1, RSP A77N1 and RSP A77N2.
2. MGS post spacing to be 6'-3" center to center, except as otherwise noted.
3. Except as noted, line posts are 6" x 8" x 6'-0" wood with 6" x 12" x 1'-2" wood blocks. W6 x 8.5 or W6 x 9 steel posts, 6'-0" in length, with 6" x 12" x 1'-2" notched wood blocks or plastic blocks may be used for 6" x 8" x 6'-0" wood posts with 6" x 12" x 1'-2" wood blocks where applicable and when specified.
4. For Transition Railing (Type WB-31) details for Types 12A and 12B Layouts, see Revised Standard Plan RSP A77U4.
5. 31" in-line terminal system end treatments are used where site conditions will not accommodate a 31" flared end treatment.
6. The type of 31" terminal system end treatment to be used will be shown on the Project Plans.
7. Dependent on site conditions (embankment height, side slopes, or other fixed objects), it may be advisable to construct additional guard railing (a length equal to multiples of 12'-6" with 6'-3" post spacing) between the transition railing and end treatment. A 12.5 degree angle of departure can be drawn on the Project Plans from the edge of traveled way through the outer most point of the fixed object to determine the additional length of railing needed.
8. Where placement of dike is required with guard railing installations, see Revised Standard Plan RSP A77N4 for dike positioning details.
9. Type 12A or Type 12B Layouts are typically used:
   a. To the right of approaching traffic, at the end of a structure, on two-lane conventional highway where the roadbed width across the structure is less than 40 feet.
   b. To the left of approaching traffic, at the end of a structure, on two-lane conventional highway where the roadbed width across the structure is less than 40 feet.
   c. To the right of approaching traffic at the end of each structure on multilane freeways or expressways with separate adjacent or parallel bridges.
   d. To the right of approaching traffic at the end of the structure on multilane freeways or expressways with decked median on the bridge.
10. See Revised Standard Plan RSP A77Q3 for typical layout used left of approaching traffic at the ends of each structure on multilane freeways or expressways with separate adjacent or parallel bridges.
11. For additional details of typical connections to bridge rail, see Connection Detail AA on Revised Standard Plans RSP A77U1 and RSP A77U2 and Connection Detail FF on Revised Standard Plans RSP A77V1 and RSP A77V2.
12. For additional details of a typical connection to walls or abutments, see Revised Standard Plan RSP A77U3.

STATE OF CALIFORNIA
DEPARTMENT OF TRANSPORTATION

MIDWEST GUARDRAIL SYSTEM TYPICAL LAYOUTS FOR STRUCTURE APPROACH

NO SCALE

RSP A77Q1 DATED AUGUST 14, 2015 SUPERSEDES RSP A77Q1 DATED JULY 19, 2013 THAT SUPPLEMENTS THE STANDARD PLANS BOOK DATED 2010.

REVISED STANDARD PLAN RSP A77Q1

2010 REVISED STANDARD PLAN RSP A77Q1

DATE PLOTTED => 28-JUL-2016
TIME PLOTTED => 14:00

Dist	COUNTY	ROUTE	POST MILES TOTAL PROJECT	SHEET No.	TOTAL SHEETS
02	Las, Sie,Las	70, 395	3.5/3.9 R0.0/R3.1,R0.0/R5.6	152	236

Randell D. Hiatt
REGISTERED CIVIL ENGINEER

August 14, 2015
PLANS APPROVAL DATE

REGISTERED PROFESSIONAL ENGINEER
Randell D. Hiatt
No. C50200
Exp. 6-30-17
CIVIL
STATE OF CALIFORNIA

THE STATE OF CALIFORNIA OR ITS OFFICERS OR AGENTS SHALL NOT BE RESPONSIBLE FOR THE ACCURACY OR COMPLETENESS OF SCANNED COPIES OF THIS PLAN SHEET.

TO ACCOMPANY PLANS DATED 06-15-16

2010 REVISED STANDARD PLAN RSP A77Q2

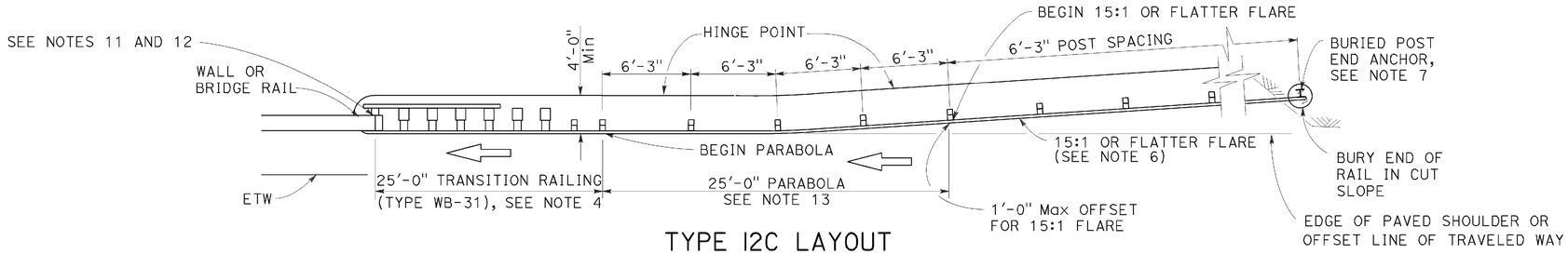

TYPE 12C LAYOUT

(MGS installation at structure approach with a Buried end anchor treatment at traffic approach end of railing)
See Notes 8 and 9

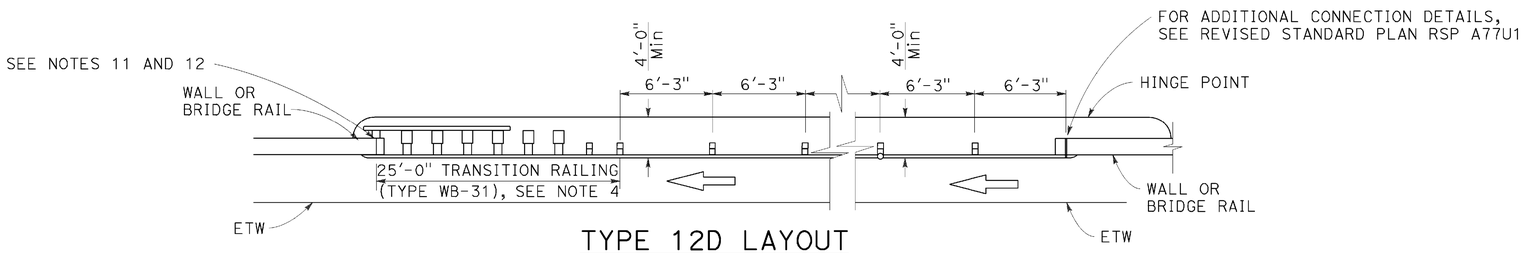

TYPE 12D LAYOUT

(Continuous MGS installation between structures)
See Notes 5 and 9

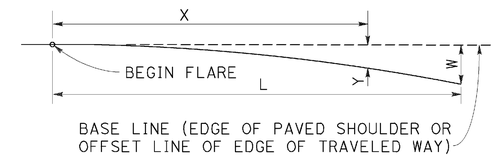

$$Y = \frac{WX^2}{L^2}$$

Y = OFFSET FROM BASE LINE
W = MAXIMUM OFFSET
X = DISTANCE ALONG BASE LINE
L = LENGTH OF FLARE

PARABOLIC FLARE OFFSETS

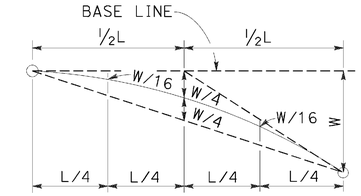

TYPICAL PARABOLIC LAYOUT

NOTES:

1. Line post, blocks and hardware to be used are shown on Revised Standard Plans RSP A77L1, RSP A77L2, RSP A77M1, RSP A77N1 and RSP A77N2.
2. MGS post spacing to be 6'-3" center to center, except as otherwise noted.
3. Except as noted, line posts are 6" x 8" x 6'-0" m wood with 6" x 12" x 1'-2" wood blocks. W6 x 8.5 or W6 x 9 steel posts, 6'-0" in length, with 6" x 12" x 1'-2" notched wood blocks or plastic blocks may be used for 6" x 8" x 6'-0" wood posts with 6" x 12" x 1'-2" wood blocks where applicable and when specified.
4. For Transition Railing (Type WB-31) details for Types 12C and 12D Layouts, see Revised Standard Plan RSP A77U4.
5. Type 12D layout is typically used where continous MGS is recommended between structures.
6. The 15:1 or flatter flare for Type 12C Layout is based on the edge of the paved shoulder or offset line of edge of the traveled way. The length of MGS with the 15:1 or flatter flare is based on site conditions and should be a length equal to multiples of 12'-6".
7. For details of the buried post end anchor used with Type 12C Layout, see Revised Standard Plan RSP A77T2.
8. Where placement of dike is required with MGS installations, see Revised Standard Plan RSP A77N4 for dike positioning details.
9. Type 12C Layout is typically used:
   a. To the right of approaching traffic, at the end of the structure, on two-lane conventional highway where the roadbed width across the structure is less than 40 feet.
   b. To the left of approaching traffic, at each of a structure, on two-lane conventional highway where the roadbed width across the structure is less than 40 feet.
   c. To the right of approaching traffic at the end of each structure on multilane freeways or expressways with separate adjacent or parallel bridges.
   d. To the right of approaching traffic at the end of the structure on multilane freeways or expressways with decked median on the bridge.
10. See Revised Standard Plan RSP A77Q3 for typical layout used left of approaching traffic at the ends of each structure on multilane freeways or expressways with separate adjacent or parallel bridges.
11. For additional details of typical connections to bridge rail, see Connection Detail AA on Revised Standard Plans RSP A77U1 and RSP A77U2 and Connection Detail FF on Revised Standard Plans RSP A77V1 and RSP A77V2.
12. For additional details of a typical connection to walls or abutments, see Revised Standard Plan RSP A77U3.
13. For typical flare offsets for 25'-0" length parabola with maximum offset of 1'-0", see Revised Standard Plan RSP A77P1.

STATE OF CALIFORNIA
DEPARTMENT OF TRANSPORTATION

MIDWEST GUARDRAIL SYSTEM TYPICAL LAYOUTS FOR STRUCTURE APPROACH AND BETWEEN STRUCTURES

NO SCALE

RSP A77Q2 DATED AUGUST 14, 2015 SUPERSEDES RSP A77Q2 DATED JULY 19, 2013 THAT SUPPLEMENTS THE STANDARD PLANS BOOK DATED 2010.

REVISED STANDARD PLAN RSP A77Q2

DATE PLOTTED => 28-JUL-2016
TIME PLOTTED => 14:01

Dist	COUNTY	ROUTE	POST MILES TOTAL PROJECT	SHEET No.	TOTAL SHEETS
02	Las, Sie,Las	70, 395	3.5/3.9 R0.0/R3.1,R0.0/R5.6	153	236

Randell D. Hiatt
REGISTERED CIVIL ENGINEER

August 14, 2015
PLANS APPROVAL DATE

REGISTERED PROFESSIONAL ENGINEER Randell D. Hiatt No. C50200 Exp. 6-30-17 CIVIL STATE OF CALIFORNIA

THE STATE OF CALIFORNIA OR ITS OFFICERS OR AGENTS SHALL NOT BE RESPONSIBLE FOR THE ACCURACY OR COMPLETENESS OF SCANNED COPIES OF THIS PLAN SHEET.

TO ACCOMPANY PLANS DATED 06-15-16

2010 REVISED STANDARD PLAN RSP A77Q3

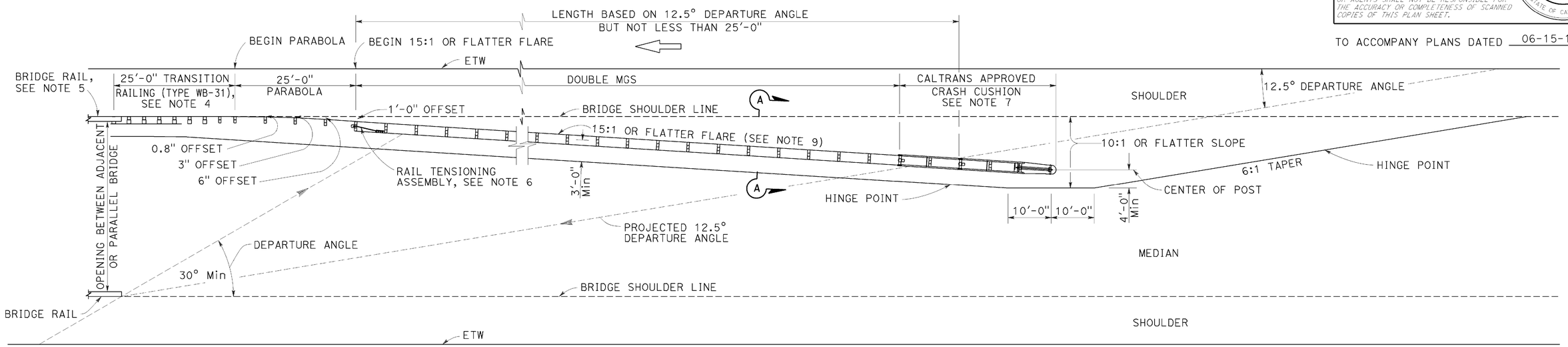

TYPE 12E LAYOUT

See Note 9

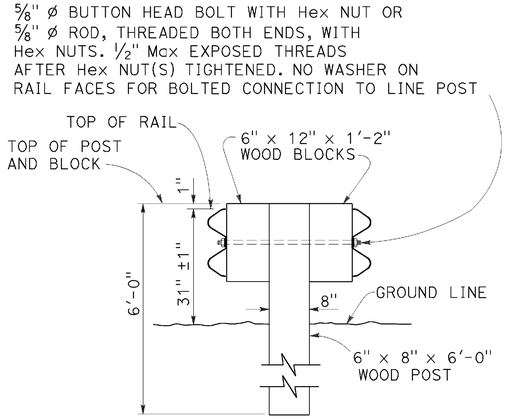

SECTION A-A
TYPICAL DOUBLE MIDWEST GUARDRAIL SYSTEM

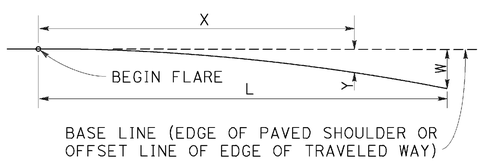

$$Y = \frac{WX^2}{L^2}$$

Y = OFFSET FROM BASE LINE
W = MAXIMUM OFFSET
X = DISTANCE ALONG BASE LINE
L = LENGTH OF FLARE

PARABOLIC FLARE OFFSETS

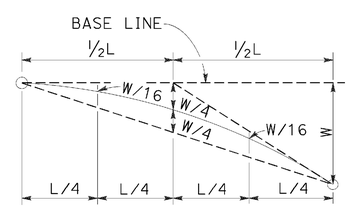

TYPICAL PARABOLIC LAYOUT

NOTES:

1. Line post, blocks and hardware to be used are shown on Revised Standard Plans RSP A77L1, RSP A77L2, RSP A77M1, RSP A77N1 and RSP A77N2.
2. MGS post spacing to be 6'-3" center to center, except as otherwise noted.
3. Except as noted, line posts are 6" x 8" x 6'-0" wood with 6" x 12" x 1'-2" wood blocks. W6 x 8.5 or W6 x 9 steel posts, 6'-0" in length, with 6" x 12" x 1'-2" notched wood blocks or notched recycled plastic blocks may be used for 6" x 8" x 6'-0" wood line posts with 6" x 12" x 1'-2" wood blocks where applicable and when specified.
4. For Transition Railing (Type WB-31) details, see Revised Standard Plan RSP A77U4.
5. For additional details of a typical connection to bridge rail, see Connection Detail AA on Revised Standard Plan RSP A77U1.
6. For Rail Tensioning Assembly details, see Revised Standard Plan RSP A77S2.
7. The type of Crash Cushion to be used will be shown on the Project Plans.
8. Type 12E Layout is typically used left of approaching traffic at the end of each structure on multilane freeways or expressways where a median type barrier is not constructed between separated roadbeds.
9. The 15:1 or flatter flare is measured off of the edge of traveled way.

STATE OF CALIFORNIA
DEPARTMENT OF TRANSPORTATION

MIDWEST GUARDRAIL SYSTEM TYPICAL LAYOUTS FOR STRUCTURE APPROACH

NO SCALE

RSP A77Q3 DATED AUGUST 14, 2015 SUPERSEDES RSP A77Q3 DATED JULY 19, 2013 THAT SUPPLEMENTS THE STANDARD PLANS BOOK DATED 2010.

REVISED STANDARD PLAN RSP A77Q3

DATE PLOTTED => 28-JUL-2016
TIME PLOTTED => 14:01

Dist	COUNTY	ROUTE	POST MILES TOTAL PROJECT	SHEET No.	TOTAL SHEETS
02	Las, Sie,Las	70, 395	3.5/3.9 R0.0/R3.1,R0.0/R5.6	154	236

Randell D. Hiatt
REGISTERED CIVIL ENGINEER

August 14, 2015
PLANS APPROVAL DATE

REGISTERED PROFESSIONAL ENGINEER
Randell D. Hiatt
No. C50200
Exp. 6-30-17
CIVIL
STATE OF CALIFORNIA

THE STATE OF CALIFORNIA OR ITS OFFICERS OR AGENTS SHALL NOT BE RESPONSIBLE FOR THE ACCURACY OR COMPLETENESS OF SCANNED COPIES OF THIS PLAN SHEET.

TO ACCOMPANY PLANS DATED 06-15-16

2010 REVISED STANDARD PLAN RSP A77Q4

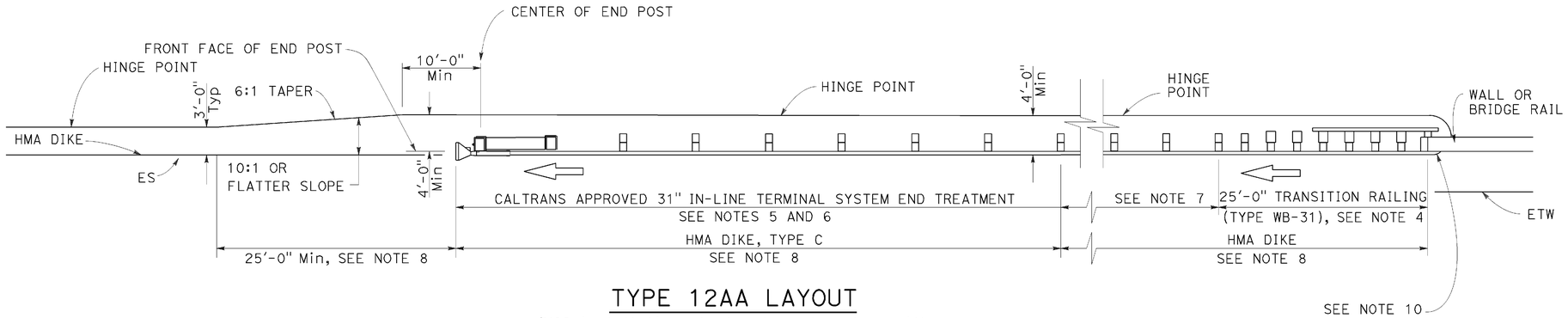

TYPE 12AA LAYOUT

(MGS installation at structure departure with
31" in-line end treatment at trailing end of railing)
See Notes 8 and 9

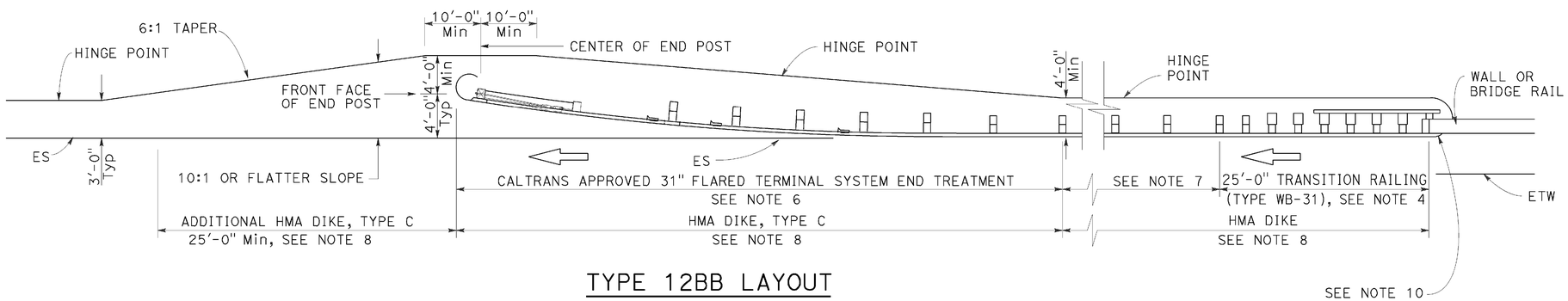

TYPE 12BB LAYOUT

(MGS installation at structure departure with
31" flared end treatment at trailing end of railing)
See Notes 8 and 9

NOTES:

1. Line post, blocks and hardware to be used are shown on Revised Standard Plans RSP A77L1, RSP A77L2, RSP A77M1, RSP A77N1 and RSP A77N2.
2. MGS post spacing to be 6'-3" center to center, except as otherwise noted.
3. Except as noted, line posts are 6" x 8" x 6'-0" wood with 6" x 12" x 1'-2" wood blocks. W6 x 8.5 or W6 x 9 steel posts, 6'-0" in length, with 6" x 12" x 1-2" notched wood blocks or notched recycled plastic blocks may be used for 6" x 8" x 6'-0" wood posts with 6" x 12" x 1'-2" wood blocks where applicable and when specified.
4. For Transition Railing (Type WB-31) details for Types 12AA and 12BB Layouts, see Revised Standard Plan RSP A77U4.
5. 31" in-line terminal system treatments are used where site conditions will not accommodate a 31" flared end treatment.
6. The type of 31" terminal system to be used will be shown on the Project Plans.
7. Dependent on site conditions (embankment height, side slopes, other fixed objects), it may be advisable to construct additional MGS (a length equal to multiples of 12'-6" with 6'-3" post spacing) between the transition railing and 31" end treatments.
8. Where placement of dike is required with MGS installations, see Revised Standard Plan RSP A77N4 for dike positioning details.
9. Type 12AA or Type 12BB Layouts are typically used to the right of traffic departing a structure on two-way conventional highways where the roadbed width across the structure is less than 40 feet.
10. For additional details of typical connections to bridge rail, see Connection Detail CC on Revised Standard Plan RSP A77U2 and Connection Detail HH on Revised Standard Plan RSP A77V2.

STATE OF CALIFORNIA
DEPARTMENT OF TRANSPORTATION

MIDWEST GUARDRAIL SYSTEM TYPICAL LAYOUTS FOR STRUCTURE DEPARTURE

NO SCALE

RSP A77Q4 DATED AUGUST 14, 2015 SUPERSEDES RSP A77Q4 DATED JULY 19, 2013 THAT SUPPLEMENTS THE STANDARD PLANS BOOK DATED 2010.

REVISED STANDARD PLAN RSP A77Q4

DATE PLOTTED => 28-JUL-2016
TIME PLOTTED => 14:01

Dist	COUNTY	ROUTE	POST MILES TOTAL PROJECT	SHEET No.	TOTAL SHEETS
02	Las, Sie,Las	70, 395	3.5/3.9 R0.0/R3.1,R0.0/R5.6	155	236

Randell D. Hiatt
REGISTERED CIVIL ENGINEER

August 14, 2015
PLANS APPROVAL DATE

REGISTERED PROFESSIONAL ENGINEER
Randell D. Hiatt
No. C50200
Exp. 6-30-17
CIVIL
STATE OF CALIFORNIA

THE STATE OF CALIFORNIA OR ITS OFFICERS OR AGENTS SHALL NOT BE RESPONSIBLE FOR THE ACCURACY OR COMPLETENESS OF SCANNED COPIES OF THIS PLAN SHEET.

TO ACCOMPANY PLANS DATED 06-15-16

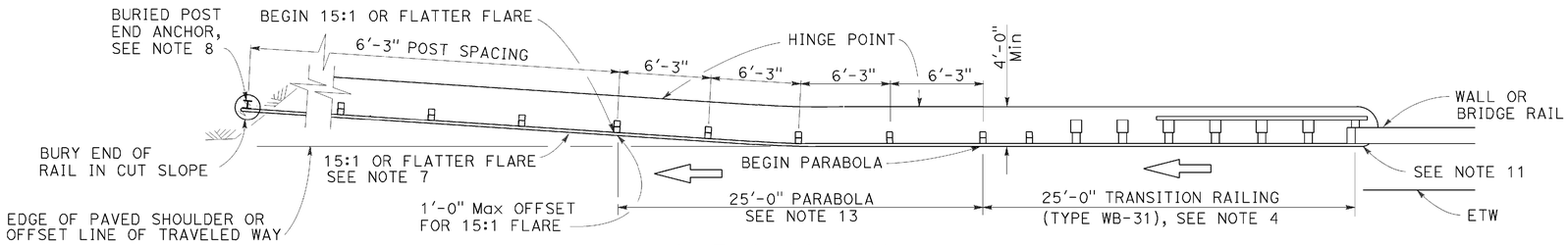

TYPE 12CC LAYOUT

(MGS installation at structure departure with a Buried end anchor treatment at trailing end of railing)
See Notes 9 and 10

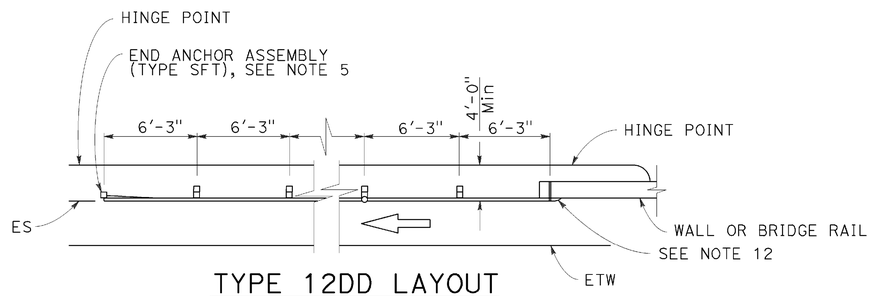

TYPE 12DD LAYOUT

(MGS installation at structure departure With end anchor assembly at trailing end of railing)
See Notes 6 and 9

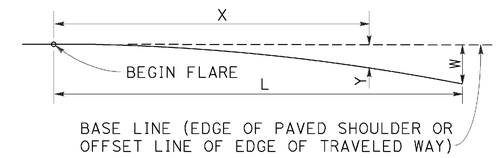

BASE LINE (EDGE OF PAVED SHOULDER OR OFFSET LINE OF EDGE OF TRAVELED WAY)

$$Y = \frac{WX^2}{L^2}$$

Y = OFFSET FROM BASE LINE
W = MAXIMUM OFFSET
X = DISTANCE ALONG BASE LINE
L = LENGTH OF FLARE

PARABOLIC FLARE OFFSETS

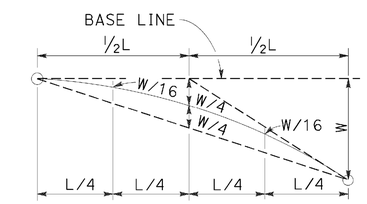

TYPICAL PARABOLIC LAYOUT

NOTES:

1. Line post, blocks and hardware to be used are shown on Revised Standard Plans RSP A77L1, RSP A77L2, RSP A77M1, RSP A77N1 and RSP A77N2.
2. MSG post spacing to be 6'-3" center to center, except as otherwise noted.
3. Except as noted, line posts are 6" x 8" x 6'-0" wood with 6" x 12" x 1'-2" wood blocks. W6 x 8.5 or W6 x 9 steel posts, 6'-0" in length, with 6" x 12" x 1'-2" notched wood blocks or notched recycled plastic blocks may be used for 6" x 8" x 6'-0" wood line posts with 6" x 12" x 1'-2" wood blocks where applicable and when specified.
4. For Transition Railing (Type WB-31) details for Type 12CC Layout, see Revised Standard Plan RSP A77U4.
5. For details of End Anchor Assembly (Type SFT) used with Type 12DD Layout, see Revised Standard Plan RSP A77S1.
6. Type 12DD layout is typically used to the right of traffic departing a structure on two-way conventional highways where the roadbed width across the structure is equal to or greater than 40 feet and MGS is recommended (embankment height, side slopes, other fixed objects). Length of railing to be equal to multiples of 12'-6". For MGS connection details to bridge rail, see Revised Standard Plans RSP A77U1 and RSP A77V1. For MGS connection details to wall, see Revised Standard Plan RSP A77U3.
7. The 15:1 or flatter flare for Type 12CC Layout is based on the edge of the paved shoulder or offset line of edge of the traveled way. The length of MGS within the 15:1 or flatter flare is based on site conditions and should be a length equal to multiples of 12'-6".
8. For details of the buried post end anchor used with Type 12CC Layout, see Revised Standard Plan RSP A77T2.
9. Where placement of dike is required with MGS installations, see Revised Standard Plan RSP A77N4 for dike positioning details.
10. Type 12CC Layout is typically used to the right of traffic departing a structure on two-way conventional highways where the roadbed width across the structure is less than 40 feet.
11. For additional details of a typical connection to bridge rail for Layout Type 12CC, see Connection Detail CC on Revised Standard Plan RSP A77U2 and Connection Detail HH on Revised Standard Plan RSP A77V2.
12. For additional details of a typical connection to bridge rail for Layout Type 12DD, see Connection Detail BB on Revised Standard Plan RSP A77U1 and Connection Detail GG on Revised Standard Plan RSP A77V1.
13. For typical flare offsets for 25'-0" length parabola with maximum offset of 1'-0", see Revised Standard Plan RSP A77P1.

STATE OF CALIFORNIA
DEPARTMENT OF TRANSPORTATION

MIDWEST GUARDRAIL SYSTEM TYPICAL LAYOUTS FOR STRUCTURE DEPARTURE

NO SCALE

RSP A77Q5 DATED AUGUST 14, 2015 SUPERSEDES RSP A77Q5 DATED JULY 19, 2013 THAT SUPPLEMENTS THE STANDARD PLANS BOOK DATED 2010.

REVISED STANDARD PLAN RSP A77Q5

2010 REVISED STANDARD PLAN RSP A77Q5

DATE PLOTTED => 28-JUL-2016
TIME PLOTTED => 14:02

Dist	COUNTY	ROUTE	POST MILES TOTAL PROJECT	SHEET No.	TOTAL SHEETS
02	Las, Sie,Las	70, 395	3.5/3.9 R0.0/R3.1,R0.0/R5.6	156	236

Randell D. Hiatt
REGISTERED CIVIL ENGINEER

July 19, 2013
PLANS APPROVAL DATE

REGISTERED PROFESSIONAL ENGINEER Randell D. Hiatt No. C50200 Exp. 6-30-15 CIVIL STATE OF CALIFORNIA

THE STATE OF CALIFORNIA OR ITS OFFICERS OR AGENTS SHALL NOT BE RESPONSIBLE FOR THE ACCURACY OR COMPLETENESS OF SCANNED COPIES OF THIS PLAN SHEET.

TO ACCOMPANY PLANS DATED 06-15-16

2010 REVISED STANDARD PLAN RSP A77R3

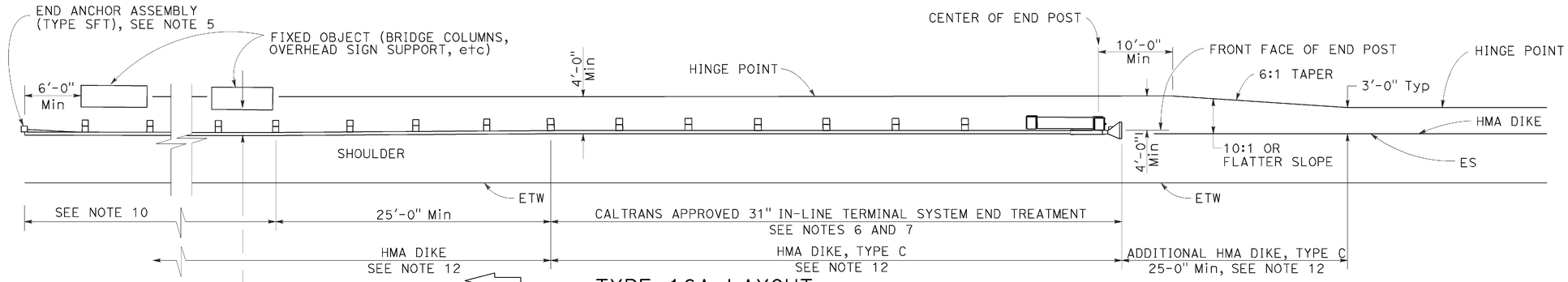

TYPE 16A LAYOUT

(MGS installation at roadside fixed object or objects with 31" in-line end treatment at traffic approach end of railing)
See Notes 11 and 12

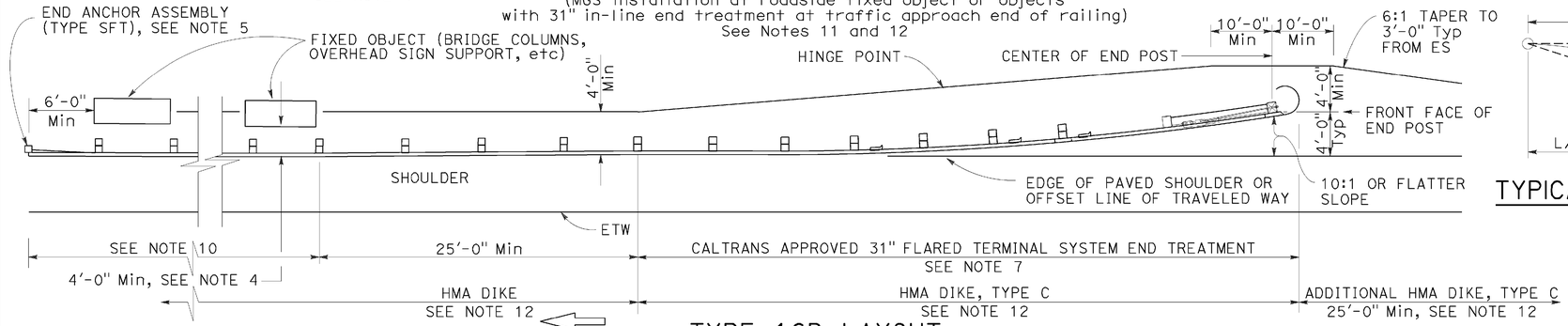

TYPE 16B LAYOUT

(MGS installation at roadside fixed object or objects with 31' flared end treatment at traffic approach end of railing)
See Notes 11 and 12

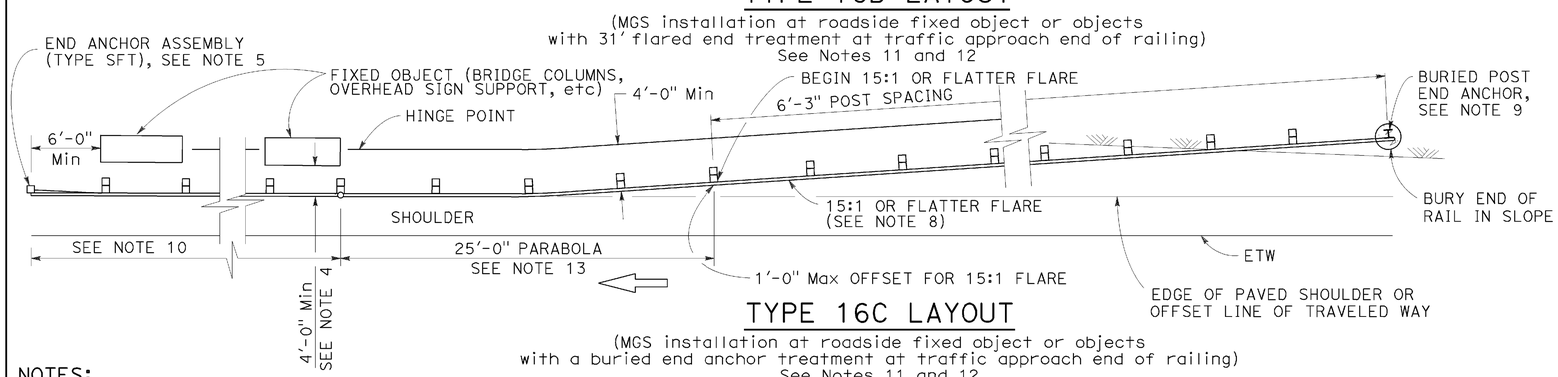

TYPE 16C LAYOUT

(MGS installation at roadside fixed object or objects with a buried end anchor treatment at traffic approach end of railing)
See Notes 11 and 12

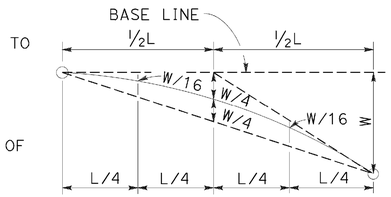

TYPIC AL PARABOLIC LAYOUT

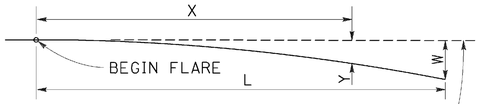

BASE LINE (EDGE OF PAVED SHOULDER OR OFFSET LINE OF EDGE OF TRAVELED WAY)

$$Y = \frac{WX^2}{L^2}$$

Y = OFFSET FROM BASE LINE
W = MAXIMUM OFFSET
X = DISTANCE ALONG BASE LINE
L = LENGTH OF FLARE

PARABOLIC FLARE OFFSETS

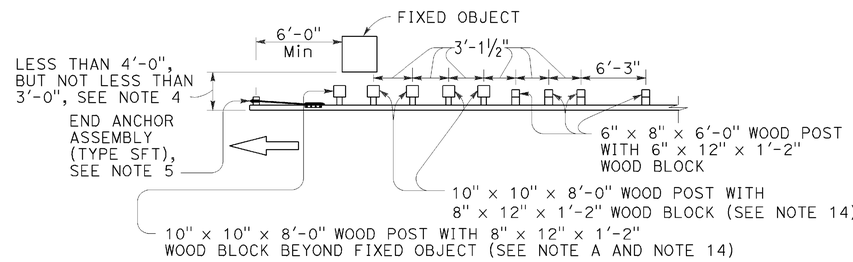

NOTE A: For a series of fixed objects (bridge columns, overhead sign supports, etc.) additional 10" x 10" x 8'-0" wood post with 8" x 12" x 1'-2" wood blocks at 3'-1½" center to center spacing are to be used between fixed objects.

STRENGTHENED MIDWEST GUARDRAIL SYSTEM SECTIONS FOR FIXED OBJECT

Use strengthened MGS sections with Types 16A, 16B or 16C layouts where minimum clearance between the face of the railing and fixed object(s) is less than 4'-0", but not less than 3'-0". See Note 4

NOTES:

1. Line post, blocks and hardware to be used are shown on Revised Standard Plans RSP A77L1, RSP A77L2, RSP A77M1, RSP A77N1 and RSP A77N2.
2. MGS post spacing to be 6'-3" center to center, except as otherwise noted.
3. Except as noted, line posts are 6" x 8" x 6'-0" wood with 6" x 12" x 1'-2" wood blocks. W6 x 8.5 or W6 x 9 steel posts, 6'-0" in length, with 6" x 12" x 1'-2" notched wood blocks or notched recycled plastic blocks may be used for 6" x 8" x 6'-0" wood line posts with 6" x 12" x 1'-2" wood blocks where applicable and when specified.
4. A 4'-0" minimum clearance is required between the face of the railing and the face of a fixed object located directly behind MGS sections with post spacing of 6'-3". Construct MGS as shown in the detail "Strengthened Midwest Guardrail System Sections for Fixed Object" on this plan, where the clearance between the face of the railing and the face of a fixed object is less than 4'-0", but not less than 3'-0". Where the clearance is less than 3'-0", a concrete wall or barrier should be constructed to shield the fixed object(s).
5. For End Anchor Assembly (Type SFT) details, see Revised Standard Plan RSP A77S1.
6. 31" in-line terminal system end treatments are used where site conditions will not accommodate a 31" flared end treatment.
7. The type of 31" terminal system to be used will be shown on the Project Plans.
8. The 15:1 or flatter flare used with Type 16C Layout is based on the edge of the paved shoulder or offset line of edge of the traveled way. The length of MGS within the 15:1 or flatter flare is based on site conditions and should be a length equal to multiples of 12'-6".
9. For details of the Buried Post End Anchor used with Type 16C Layout, see Revised Standard Plan RSP A77T2.
10. As site conditions dictate, construct additional MGS to shield fixed object(s). Additional MGS length equal to multiples of 12'-6". Post spacing at 6'-3" except as specified in Note 4.
11. Layout Types 16A, 16B or 16C are typically used where MGS is recommended to shield roadside fixed object(s) and a crashworthy 31" end treatment is required for only one direction of traffic.
12. Where placement of dike is required with MGS, see Revised Standard Plan RSP A77N4 for dike positioning details.
13. For typical flare offsets for 25'-0" length parabola with maximum offset of 1'-0", see Revised Standard Plan RSP A77P1.
14. W6 x 15 steel post, 8'-0" in length, with 8" x 12" x 1'-2" notched wood block or notched recycled plastic blocks may be used in place of the 10" x 10" x 8'-0" wood post with 8" x 12" x 1'-2" wood block shown in the detail "Strengthened Midwest Guardrail System Sections for Fixed Object".

STATE OF CALIFORNIA
DEPARTMENT OF TRANSPORTATION

MIDWEST GUARDRAIL SYSTEM TYPICAL LAYOUTS FOR ROADSIDE FIXED OBJECTS

NO SCALE

RSP A77R3 DATED JULY 19, 2013 SUPPLEMENTS THE STANDARD PLANS BOOK DATED 2010.

REVISED STANDARD PLAN RSP A77R3

DATE PLOTTED => 28-JUL-2016
TIME PLOTTED => 14:02

Dist	COUNTY	ROUTE	POST MILES TOTAL PROJECT	SHEET No.	TOTAL SHEETS
02	Las, Sie,Las	70, 395	3.5/3.9 R0.0/R3.1,R0.0/R5.6	157	236

Randell D. Hiatt
REGISTERED CIVIL ENGINEER

July 19, 2013
PLANS APPROVAL DATE

REGISTERED PROFESSIONAL ENGINEER
Randell D. Hiatt
No. C50200
Exp. 6-30-15
CIVIL
STATE OF CALIFORNIA

THE STATE OF CALIFORNIA OR ITS OFFICERS OR AGENTS SHALL NOT BE RESPONSIBLE FOR THE ACCURACY OR COMPLETENESS OF SCANNED COPIES OF THIS PLAN SHEET.

TO ACCOMPANY PLANS DATED 06-15-16

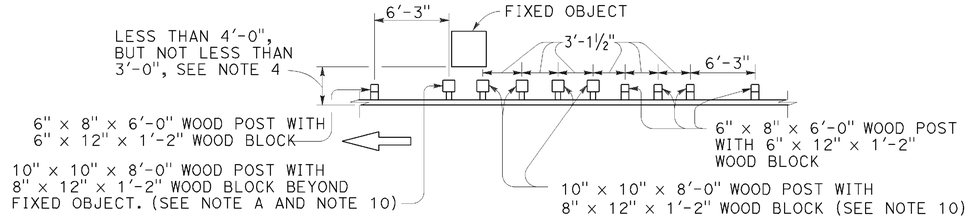

NOTE A: For a series of fixed objects (bridge columns, overhead sign supports, etc.) additional 10" x 10" x 8'-0" wood post with 8" x 12" x 1'-2" wood blocks at 3'-1½" center to center spacing are to be used between fixed object(s).

STRENGTHENED MIDWEST GUARDRAIL SYSTEM SECTIONS FOR FIXED OBJECT

Use strengthened MGS sections with layout Types 16D or 16E where minimum clearance between the face of the MGS and fixed object(s) is less than 4'-0", but not less than 3'-0". See Note 4.

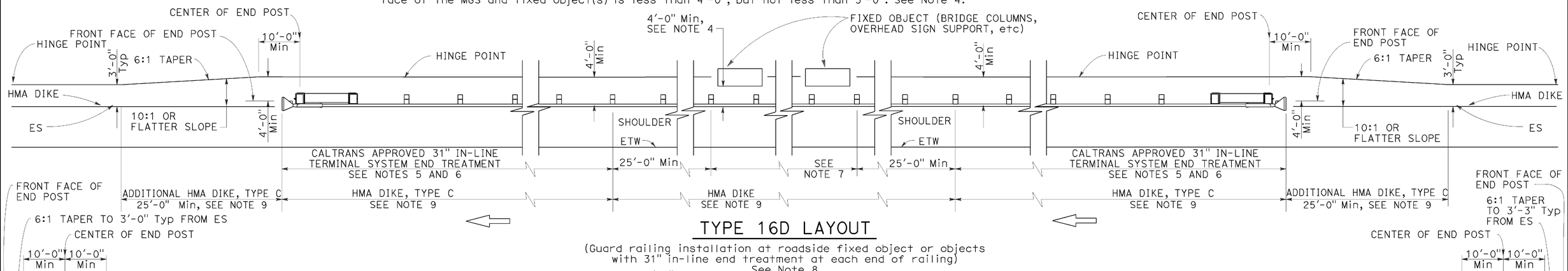

TYPE 16D LAYOUT

(Guard railing installation at roadside fixed object or objects with 31" in-line end treatment at each end of railing)
See Note 8

TYPE 16E LAYOUT

(MGS installation at roadside fixed object or objects with 31" flared end treatment at each end of railing)
See Note 8

NOTES:

1. Line post, blocks and hardware to be used are shown on Revised Standard Plans RSP A77L1, RSP A77L2, RSP A77M1, RSP A77N1 and RSP A77N2.

2. MGS post spacing to be 6'-3" center to center, except as otherwise noted.

3. Except as noted, line posts are 6" x 8" x 6'-0" wood with 6" x 12" x 1'-2" wood blocks. W6 x 8.5 or W6 x 9 steel posts, 6'-0" in length, with 6" x 12" x 1'-2" notched wood blocks or notched recycled plastic blocks may be used for 6" x 8" x 6'-0" wood line posts with 6" x 12" x 1'-2" wood blocks where applicable and when specified.

4 A 4'-0" minimum clearance is required between the face of the railing and the face of a fixed object located directly behind MGS sections with post spacing at 6'-3". Construct MGS as shown in the detail "Strengthened Midwest Guardrail System Sections for Fixed Object". on this plan, where the clearance between the face of the railing and the face of a fixed object is less than 4'-0", but not less than 3'-0". Where the clearance is less than 3'-0", a concrete wall or barrier should be constructed to shield the fixed object(s).

5. 31" in-line terminal system end treatments are used where site conditions will not accommodate a 31" flared end treatment.

6. The type of 31" terminal system to be used will be shown on the Project Plans.

7. As site conditions dictate, construct additional MGS to shield fixed object(s). Additional MGS length equal to multiples of 12'-6". Post spacing at 6'-3", except as specified in Note 4.

8. Layout Types 16D through 16L, shown on the A77R Series of Standard Plans, are typically used where MGS is recommended to shield roadside fixed object(s) and a crashworthy 31" end treatment is required for both directions of traffic.

9. Where placement of dike is required with MGS, see Revised Standard Plan RSP A77N4 for dike positioning details.

10. W6 x 15 steel post, 8'-0" in length, with 8" x 12" x 1'-2" notched wood block or notched recycled plastic block may be used in place of the 10" x 10" x 8'-0" wood post with 8" x 12" x 1'-2" wood block shown in the detail "Strengthened Midwest Guardrail System Sections for Fixed Object".

STATE OF CALIFORNIA
DEPARTMENT OF TRANSPORTATION

MIDWEST GUARDRAIL SYSTEM TYPICAL LAYOUTS FOR ROADSIDE FIXED OBJECTS

NO SCALE

RSP A77R4 DATED JULY 19, 2013 SUPPLEMENTS THE STANDARD PLANS BOOK DATED 2010.

REVISED STANDARD PLAN RSP A77R4

2010 REVISED STANDARD PLAN RSP A77R4

DATE PLOTTED => 28-JUL-2016
TIME PLOTTED => 14:02

Dist	COUNTY	ROUTE	POST MILES TOTAL PROJECT	SHEET No.	TOTAL SHEETS
02	Las, Sie,Las	70, 395	3.5/3.9 R0.0/R3.1,R0.0/R5.6	158	236

Randell D. Hiatt
REGISTERED CIVIL ENGINEER

July 19, 2013
PLANS APPROVAL DATE

REGISTERED PROFESSIONAL ENGINEER Randell D. Hiatt No. C50200 Exp. 6-30-15 CIVIL STATE OF CALIFORNIA

THE STATE OF CALIFORNIA OR ITS OFFICERS OR AGENTS SHALL NOT BE RESPONSIBLE FOR THE ACCURACY OR COMPLETENESS OF SCANNED COPIES OF THIS PLAN SHEET.

TO ACCOMPANY PLANS DATED 06-15-16

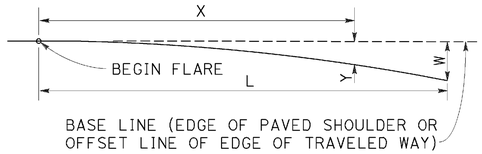

$$Y = \frac{WX^2}{L^2}$$

Y = OFFSET FROM BASE LINE
W = MAXIMUM OFFSET
X = DISTANCE ALONG BASE LINE
L = LENGTH OF FLARE

PARABOLIC FLARE OFFSETS

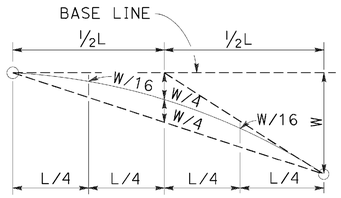

TYPICAL PARABOLIC LAYOUT

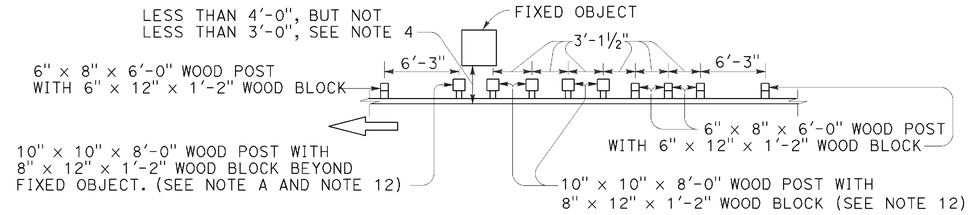

NOTE A: For a series of fixed objects (bridge columns, overhead sign supports, etc) additional 10" x 10" x 8'-0" wood post with 8" x 12" x 1'-2" wood blocks at 3'-1½" center to center spacing are to be used between fixed object(s).

STRENGTHENED MIDWEST GUARDRAIL SYSTEM SECTIONS FOR FIXED OBJECT

Use strengthened MGS sections with layout Types 16F or 16G where minimum clearance between the face of the MGS and fixed object(s) is less than 4'-0", but not less than 3'-0". See Note 4.

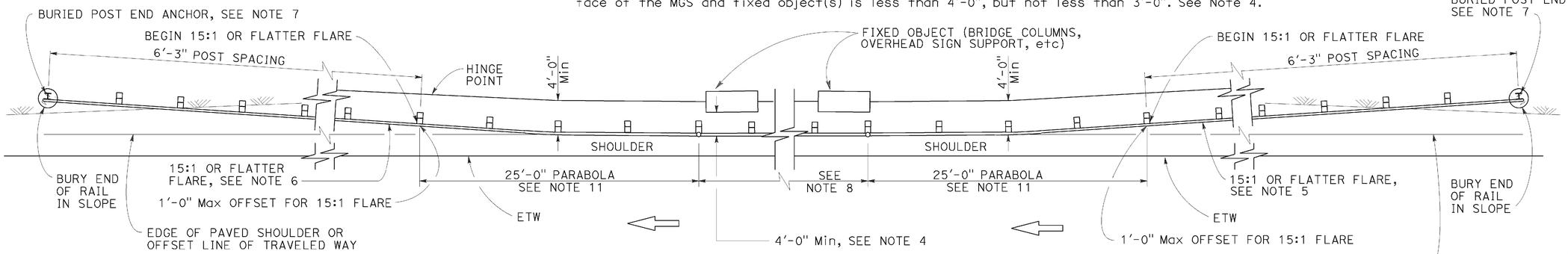

TYPE 16F LAYOUT

(MGS installation at roadside fixed object or objects With a buried end anchor treatment at each end of railing) See Notes 9 and 10

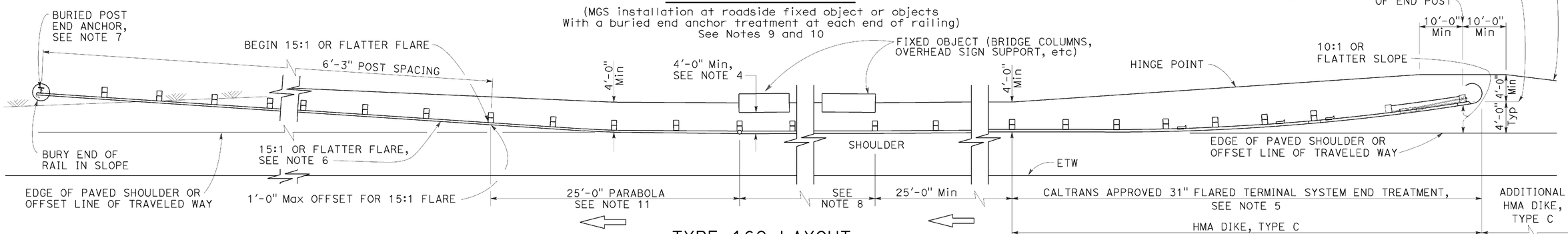

TYPE 16G LAYOUT

(MGS installation at roadside fixed object or objects with 31" flared end treatment and a buried end anchor treatment at the ends of railing) See Notes 9 and 10

NOTES:

1. Line post, blocks and hardware to be used are shown on Revised Standard Plans RSP A77L1, RSP A77L2, RSP A77M1, RSP A77N1 and RSP A77N2.
2. MGS post spacing to be 6'-3" center to center, except as otherwise noted.
3. Except as noted, line posts are 6" x 8" x 6'-0" wood with 6" x 12" x 1'-2" wood blocks. W6 x 8.5 or W6 x 9 steel posts, 6'-0" in length, with 8" x 12" x 1'-2" notched wood blocks or notched recycled plastic blocks may be used for 6" x 8" x 6'-0" wood posts with 6" x 12" x 1'-2" wood blocks where applicable and when specified.
4. A 4'-0" minimum clearance is required between the face of the railing and the face of a fixed object located directly behind MGS sections with post spacing at 6'-3". Construct MGS as shown in the detail "Strengthened Midwest Guardrail System Sections for Fixed Objects" on this plan, where the clearance between the face of the railing and the face of a fixed object is less than 4'-0", but not less than 3'-0". Where the clearance is less than 3'-0", a concrete wall or barrier should be constructed to shield the fixed object(s).
5. The type of 31" terminal system to be used will be shown on the Project Plans.
6. The 15:1 or flatter flare for the buried post anchor is based on the edge of the paved shoulder or offset line of edge of the traveled way. The length of MGS within the 15:1 or flatter flare is based on site conditions and should be a length equal to multiples of 12'-6".
7. For details of the Buried Post End Anchor, see Revised Standard Plan RSP A77T2.
8. As site conditions dictate, construct additional MGS to shield fixed object(s). Additional MGS length equal to multiples of 12'-6". Post spacing at 6'-3", except as specified in Note 4.
9. Layout Types 16D through 16L, shown on the A77R Series of Standard Plans, are typically used on highways where MGS is recommended to shield roadside fixed object(s) and a crashworthy 31" end treatment is required for both directions of traffic.
10. Where placement of dike is required with MGS, see Revised Standard Plan RSP A77N4 for dike positioning details.
11. For typical flare offsets for 25'-0" length parabola with maximum offset of 1'-0", see Revised Standard Plan RSP A77P1.
12. W6 x 15 steel post, 8'-0" in length, with 8" x 12" x 1'-2" notched wood block or notched recycled plastic blocks may be used in place of the 10" x 10" x 8'-0" wood post with 8" x 12" x 1'-2" wood block shown in the detail "Strengthened Midwest Guardrail System Sections for Fixed Object".

STATE OF CALIFORNIA
DEPARTMENT OF TRANSPORTATION

MIDWEST GUARDRAIL SYSTEM TYPICAL LAYOUTS FOR ROADSIDE FIXED OBJECTS

NO SCALE

RSP A77R5 DATED JULY 19, 2013 SUPPLEMENTS THE STANDARD PLANS BOOK DATED 2010.

REVISED STANDARD PLAN RSP A77R5

2010 REVISED STANDARD PLAN RSP A77R5

DATE PLOTTED => 28-JUL-2016
TIME PLOTTED => 14:03

Dist	COUNTY	ROUTE	POST MILES TOTAL PROJECT	SHEET No.	TOTAL SHEETS
02	Las, Sie,Las	70, 395	3.5/3.9 R0.0/R3.1,R0.0/R5.6	159	236

Randell D. Hiatt
REGISTERED CIVIL ENGINEER

July 19, 2013
PLANS APPROVAL DATE

REGISTERED PROFESSIONAL ENGINEER
Randell D. Hiatt
No. C50200
Exp. 6-30-15
CIVIL
STATE OF CALIFORNIA

THE STATE OF CALIFORNIA OR ITS OFFICERS OR AGENTS SHALL NOT BE RESPONSIBLE FOR THE ACCURACY OR COMPLETENESS OF SCANNED COPIES OF THIS PLAN SHEET.

TO ACCOMPANY PLANS DATED 06-15-16

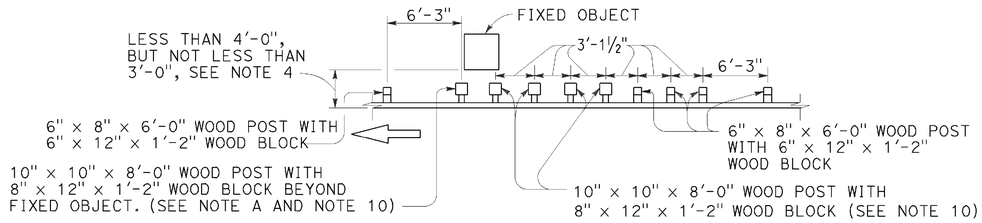

NOTE A: For a series of fixed objects (bridge columns, overhead sign supports, etc.) additional 10" x 10" x 8'-0" wood post with 8" x 12" x 1'-2" wood blocks at 3'-1½" center to center spacing are to be used between fixed object(s).

STRENGTHENED MIDWEST GUARDRAIL SYSTEM SECTIONS FOR FIXED OBJECT

Use strengthened MGS sections with layout Type 16H where minimum clearance between the face of the MGS and fixed object(s) is less than 4'-0", but not less than 3'-0". See Note 4.

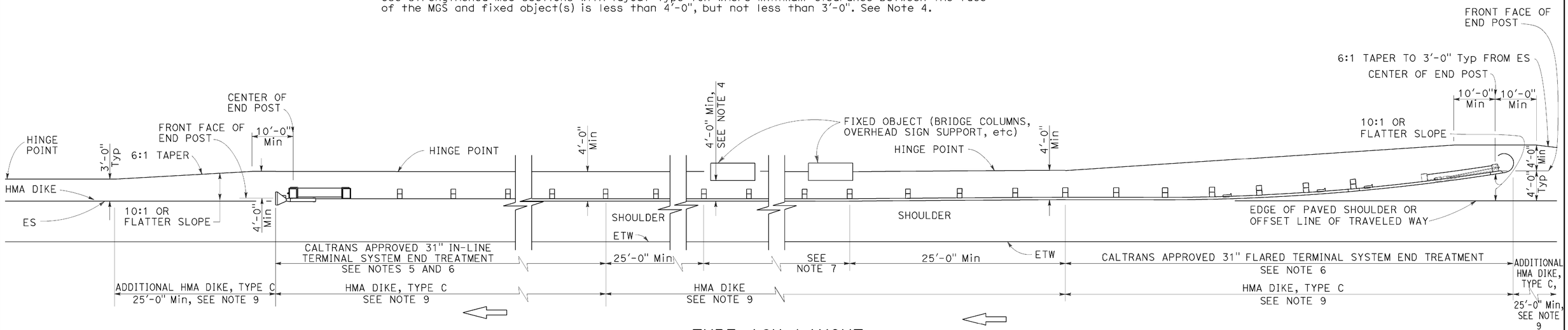

TYPE 16H LAYOUT

(MGS installation at roadside fixed object or objects with 31" flared end treatment and 31" in-line end treatment at the ends of railing)
See Note 8

NOTES:

1. Line post, blocks and hardware to be used are shown on Revised Standard Plans RSP A77L1, RSP A77L2, RSP A77M1, RSP A77N1 and RSP A77N2.
2. MGS post spacing to be 6'-3" center to center, except as otherwise noted.
3. Except as noted, line posts are 6" x 8" x 6'-0" wood with 6" x 12" x 1'-2" wood blocks. W6 x 8.5 or W6 x 9 steel posts, 6'-0" in length, with 6" x 12" x 1'-2" notched wood blocks or notched recycled plastic blocks may be used for 6" x 8" x 6'-0" wood posts with 6" x 12" x 1'-2" wood blocks where applicable and when specified.
4. A 4'-0" minimum clearance is required between the face of the railing and the face of a fixed object located directly behind MGS sections with post spacing at 6'-3". Construct MGS as shown in the detail "Strengthened Midwest Guardrail System Sections for Fixed Objects" on this plan, where the clearance between the face of the railing and the face of a fixed object is less than 4'-0", but not less than 3'-0". Where the clearance is less than 3'-0", a concrete wall or barrier should be constructed to shield the fixed object(s).
5. 31" in-line terminal system end treatments are used where site conditions will not accommodate a 31" flared end treatment.
6. The type of 31" terminal system to be used will be shown on the Project Plans.
7. As site conditions dictate, construct additional MGS to shield fixed object(s). Additional MGS length equal to multiples of 12'-6". Post spacing at 6'-3", except as specified in Note 4.
8. Layout Types 16D through 16L, shown on the A77R Series of Standard PLans, typically used where MGS is recommended to shield roadside fixed object(s) and a crashworthy 31" end treatment is required for both directions of traffic.
9. Where placement of dike is required with MGS, see Revised Standard Plan RSP A77N4 for dike positioning details.
10. W6 x 15 steel post, 8'-0" in length, with 8" x 12" x 1'-2" notched wood block or notched recycled plastic blocks may be used in place of the 10" x 10" x 8'-0" wood post with 8" x 12" x 1'-2" wood block shown in the detail "Strengthened Midwest Guardrail System Sections for Fixed Object".

STATE OF CALIFORNIA
DEPARTMENT OF TRANSPORTATION

MIDWEST GUARDRAIL SYSTEM TYPICAL LAYOUTS FOR ROADSIDE FIXED OBJECTS

NO SCALE

RSP A77R6 DATED JULY 19, 2013 SUPPLEMENTS THE STANDARD PLANS BOOK DATED 2010.

REVISED STANDARD PLAN RSP A77R6

2010 REVISED STANDARD PLAN RSP A77R6

DATE PLOTTED => 28-JUL-2016
TIME PLOTTED => 14:03

Dist	COUNTY	ROUTE	POST MILES TOTAL PROJECT	SHEET No.	TOTAL SHEETS
02	Las, Sie,Las	70, 395	3.5/3.9 R0.0/R3.1,R0.0/R5.6	160	236

Randell D. Hiatt
REGISTERED CIVIL ENGINEER

July 19, 2013
PLANS APPROVAL DATE

REGISTERED PROFESSIONAL ENGINEER Randell D. Hiatt No. C50200 Exp. 6-30-15 CIVIL STATE OF CALIFORNIA

THE STATE OF CALIFORNIA OR ITS OFFICERS OR AGENTS SHALL NOT BE RESPONSIBLE FOR THE ACCURACY OR COMPLETENESS OF SCANNED COPIES OF THIS PLAN SHEET.

TO ACCOMPANY PLANS DATED 06-15-16

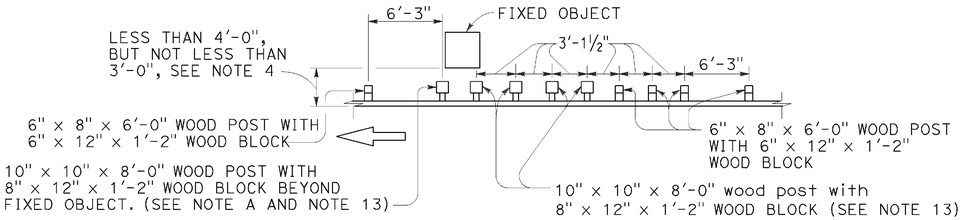

NOTE A: For a series of fixed objects (bridge columns, overhead sign supports, etc.) additional 10" x 10" x 8'-0" wood post with 8" x 12" x 1'-2" wood blocks at 3'-1½" center to center spacing are to be used between fixed object(s).

STRENGTHENED MIDWEST GUARDRAIL SYSTEM SECTIONS FOR FIXED OBJECT

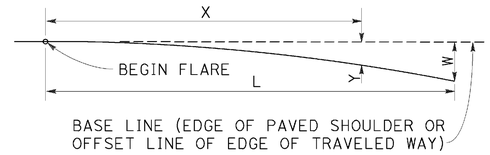

BASE LINE (EDGE OF PAVED SHOULDER OR OFFSET LINE OF EDGE OF TRAVELED WAY)

$$Y = \frac{WX^2}{L^2}$$

Y = OFFSET FROM BASE LINE
W = MAXIMUM OFFSET
X = DISTANCE ALONG BASE LINE
L = LENGTH OF FLARE

PARABOLIC FLARE OFFSETS

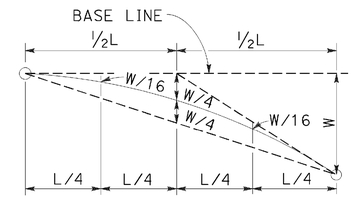

TYPICAL PARABOLIC LAYOUT

Use strengthened MGS sections with layout Types 16I or 16J Layouts where minimum clearance between the face of the MGS and fixed object(s) is less than 4'-0", but not less than 3'-0". See Note 4.

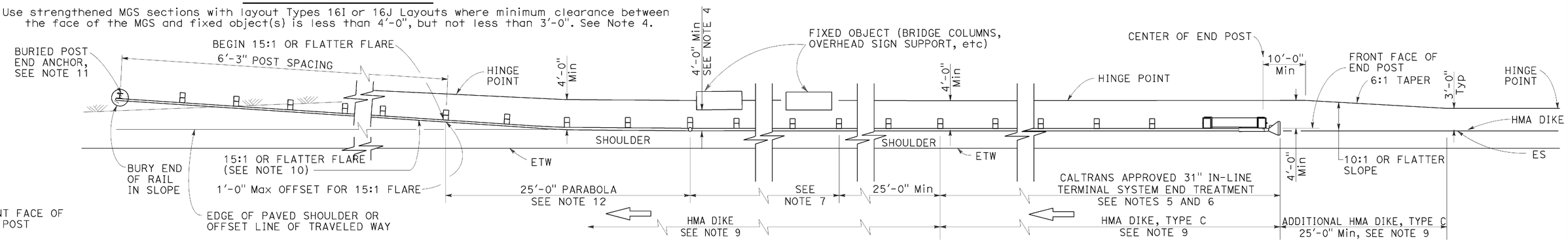

TYPE 16I LAYOUT

(MGS installation at roadside fixed object or objects with 31" in-line end treatment and a buried end anchor treatment at the ends of railing) See Note 8

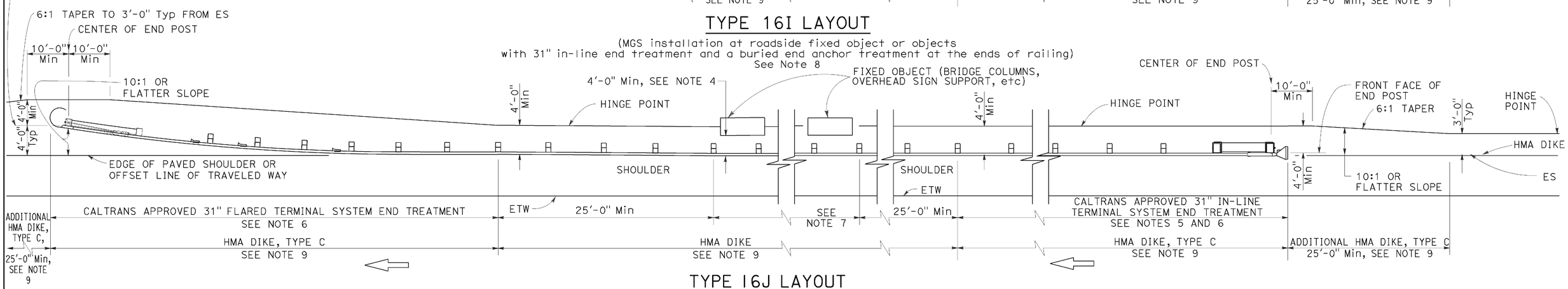

TYPE 16J LAYOUT

(MGS installation at roadside fixed object or objects With a 31" in-line end treatment and a 31" flared end treatment at the ends of railing) See Note 8

NOTES:

1. Line post, blocks and hardware to be used are shown on Revised Standard Plans RSP A77L1, RSP A77L2, RSP A77M1, RSP A77N1 and RSP A77N2.
2. MGS post spacing to be 6'-3" center to center, except as otherwise noted.
3. Except as noted, line posts are 6" x 8" x 6'-0" wood with 6" x 12" x 1'-2" wood blocks. W6 x 8.5 or W6 x 9 steel posts, 6'-0" in length, with 6" x 12" x 1'-2" notched wood blocks or notched recycled plastic blocks may be used for 6" x 8" x 6'-0" wood posts with 6" x 12" x 1'-2" wood blocks where applicable and when specified.
4. A 4'-0" minimum clearance is required between the face of the railing and the face of a fixed object located directly behind MGS sections with post spacing at 6'-3". Construct MGS as shown in the detail "Strengthened Midwest Guardrail System Sections for Fixed Objects" on this plan, where the clearance between the face of the railing and the face of a fixed object is less than 4'-0", but not less than 3'-0". Where the clearance is less than 3'-0", a concrete wall or barrier should be constructed to shield the fixed object(s).
5. 31" in-line terminal system end treatments are used where site conditions will not accommodate a 31" flared end treatment.
6. The type of 31" terminal system to be used will be shown on the Project Plans.
7. As site conditions dictate, construct additional MGS to shield fixed object(s). Additional MGS length equal to multiples of 12'-6". Post spacing at 6'-3", except as specified in Note 4.
8. Layout Types 16D through 16L, shown on the A77R Series of Standard Plans, are typically used where MGS is recommended to shield roadside fixed object(s) and a crashworthy 31" end treatment is required for both directions of traffic.
9. Where placement of dike is required with guard railing, see Revised Standard Plan RSP A77N4 for dike positioning details.
10. The 15:1 or flatter flare for the buried post anchor is based on the edge of the paved shoulder or offset line of edge of the traveled way. The length of MGS within the 15:1 or flatter flare is based on site conditions and should be a length equal to multiples of 12'-6".
11. For details of Buried Post End Anchor, see Revised Standard Plan RSP A77T2.
12. For typical flare offsets for 25'-0" length parabola with maximum offset of 1'-0", see Revised Standard Plan RSP A77P1.
13. W6 x 15 steel post, 8'-0" in length, with 8" x 12" x 1'-2" notched wood block or notched recycled plastic blocks may be used in place of the 10" x 10" x 8'-0" wood post with 8" x 12" x 1'-2" wood block shown in the detail "Strengthened Midwest Guardrail System Sections for Fixed Object".

STATE OF CALIFORNIA
DEPARTMENT OF TRANSPORTATION

MIDWEST GUARDRAIL SYSTEM TYPICAL LAYOUTS FOR ROADSIDE FIXED OBJECTS

NO SCALE

RSP A77R7 DATED JULY 19, 2013 SUPPLEMENTS THE STANDARD PLANS BOOK DATED 2010.

REVISED STANDARD PLAN RSP A77R7

2010 REVISED STANDARD PLAN RSP A77R7

DATE PLOTTED => 28-JUL-2016
TIME PLOTTED => 14:03

Dist	COUNTY	ROUTE	POST MILES TOTAL PROJECT	SHEET No.	TOTAL SHEETS
02	Las, Sie,Las	70, 395	3.5/3.9 R0.0/R3.1,R0.0/R5.6	161	236

Randell D. Hiatt
REGISTERED CIVIL ENGINEER

July 19, 2013
PLANS APPROVAL DATE

REGISTERED PROFESSIONAL ENGINEER Randell D. Hiatt No. C50200 Exp. 6-30-15 CIVIL STATE OF CALIFORNIA

THE STATE OF CALIFORNIA OR ITS OFFICERS OR AGENTS SHALL NOT BE RESPONSIBLE FOR THE ACCURACY OR COMPLETENESS OF SCANNED COPIES OF THIS PLAN SHEET.

TO ACCOMPANY PLANS DATED 06-15-16

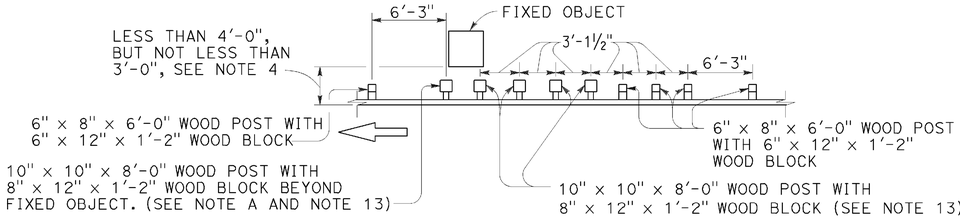

NOTE A: For a series of fixed objects (bridge columns, overhead sign supports, etc.) additional 10" x 10" x 8'-0" wood post with 8" x 12" x 1'-2" wood blocks at 3'-1½" center to center spacing are to be used between fixed object(s).

STRENGTHENED MIDWEST GUARDRAIL SYSTEM SECTIONS FOR FIXED OBJECT

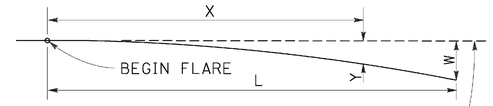

BASE LINE (EDGE OF PAVED SHOULDER OR OFFSET LINE OF EDGE OF TRAVELED WAY)

$$Y = \frac{WX^2}{L^2}$$

Y = OFFSET FROM BASE LINE
W = MAXIMUM OFFSET
X = DISTANCE ALONG BASE LINE
L = LENGTH OF FLARE

PARABOLIC FLARE OFFSETS

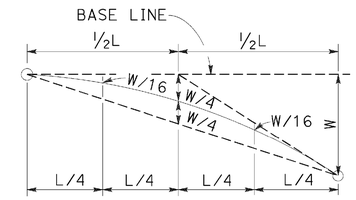

TYPICAL PARABOLIC LAYOUT

Use strengthened MGS sections with layout Types 16K or 16L layouts where minimum clearance between the face of the MGS and fixed object(s) is less than 4'-0", but not less than 3'-0". See Note 4.

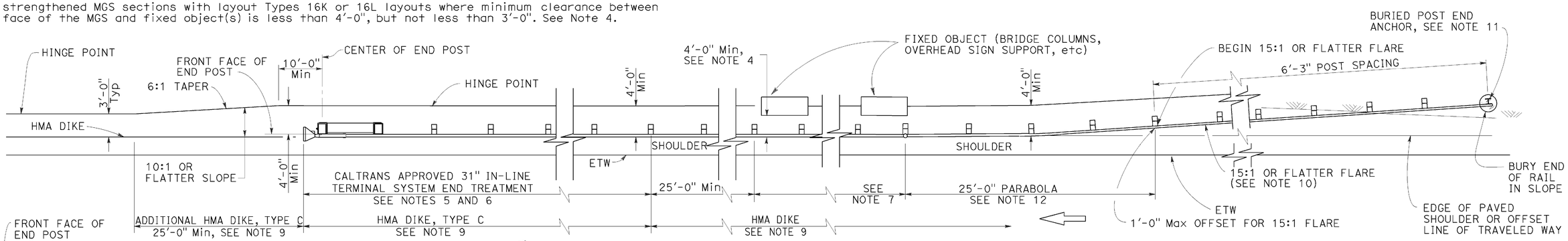

TYPE 16K LAYOUT

(MGS installation at roadside fixed object or objects with a buried end anchor treatment and a 31" in-line end treatment at the ends of railing) See Note 8

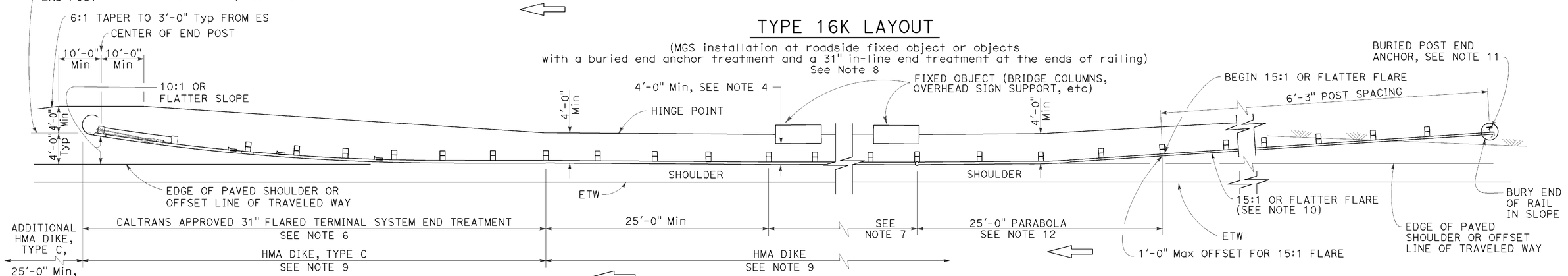

TYPE 16L LAYOUT

(MGS installation at roadside fixed object or objects with a buried end anchor treatment and a 31" flared end treatment at the ends of railing) See Note 8

NOTES:

1. Line post, blocks and hardware to be used are shown on Revised Standard Plans RSP A77L1, RSP A77L2, RSP A77M1, RSP A77N1 and RSP A77N2.
2. MGS post spacing to be 6'-3" center to center, except as otherwise noted.
3. Except as noted, line posts are 6" x 8" x 6'-0" wood with 6" x 12" x 1'-2" wood blocks. W6 x 8.5 or W6 x 9 steel posts, 6'-0" in length, with 6" x 12" x 1'-2" notched wood blocks or notched recycled plastic blocks may be used for 6" x 8" x 6'-0" wood posts with 6" x 12" x 1'-2" wood blocks where applicable and when specified.
4. A 4'-0" minimum clearance is required between the face of the railing and the face of a fixed object located directly behind MGS sections with post spacing at 6'-3". Construct MGS as shown in the detail "Strengthened Midwest Guardrail System Sections for Fixed Objects" on this plan, where the clearance between the face of the railing and the face of a fixed object is less than 4'-0", but not less than 3'-0". Where the clearance is less than 3'-0", a concrete wall or barrier should be constructed to shield the fixed object(s).
5. 31" in-line terminal system end treatments are used where site conditions will not accommodate a 31" flared end treatment.
6. The type of 31" terminal system to be used will be shown on the Project Plans.
7. As site conditions dictate, construct additional MGS to shield fixed object(s). Additional MGS length equal to multiples of 12'-6". Post spacing at 6'-3", except as specified in Note 4.
8. Layout Types 16D through 16L, shown on the A77R Series of Standard Plans are typically used where MGS is recommended to shield roadside fixed object(s) and a crashworthy 31" end treatment is required for both directions of traffic.
9. Where placement of dike is required with MGS, see Revised Standard Plan RSP A77N4 for dike positioning details.
10. The 15:1 or flatter flare for the buried post anchor is based on the edge of the paved shoulder or offset line of edge of the traveled way. The length of MGS within the 15:1 or flatter flare is based on site conditions and should be a length equal to multiples of 12'-6".
11. For details of Buried Post End Anchor, see Revised Standard Plan RSP A77T2.
12. For typical flare offsets for 25'-0" length parabola with maximum offset of 1'-0", see Revised Standard Plan RSP A77P1.
13. W6 x 15 steel post, 8'-0" in length, with 8" x 12" x 1'-2" notched wood block or notched recycled plastic blocks may be used in place of the 10" x 10" x 8'-0" wood post with 8" x 12" x 1'-2" wood block shown in the detail "Strengthened Midwest Guardrail System Sections for Fixed Object".

STATE OF CALIFORNIA
DEPARTMENT OF TRANSPORTATION

MIDWEST GUARDRAIL SYSTEM TYPICAL LAYOUTS FOR ROADSIDE FIXED OBJECTS

NO SCALE

RSP A77R8 DATED JULY 19, 2013 SUPPLEMENTS THE STANDARD PLANS BOOK DATED 2010.

REVISED STANDARD PLAN RSP A77R8

2010 REVISED STANDARD PLAN RSP A77R8

DATE PLOTTED => 28-JUL-2016
TIME PLOTTED => 14:04

Dist	COUNTY	ROUTE	POST MILES TOTAL PROJECT	SHEET No.	TOTAL SHEETS
02	Las, Sie,Las	70, 395	3.5/3.9 R0.0/R3.1,R0.0/R5.6	162	236

Randell D. Hiatt
REGISTERED CIVIL ENGINEER

November 15, 2013
PLANS APPROVAL DATE

REGISTERED PROFESSIONAL ENGINEER
Randell D. Hiatt
No. C50200
Exp. 6-30-15
CIVIL
STATE OF CALIFORNIA

THE STATE OF CALIFORNIA OR ITS OFFICERS OR AGENTS SHALL NOT BE RESPONSIBLE FOR THE ACCURACY OR COMPLETENESS OF SCANNED COPIES OF THIS PLAN SHEET.

TO ACCOMPANY PLANS DATED 06-15-16

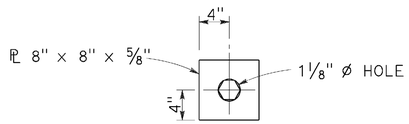

DETAIL "A"
CABLE CONNECTION
END PLATE

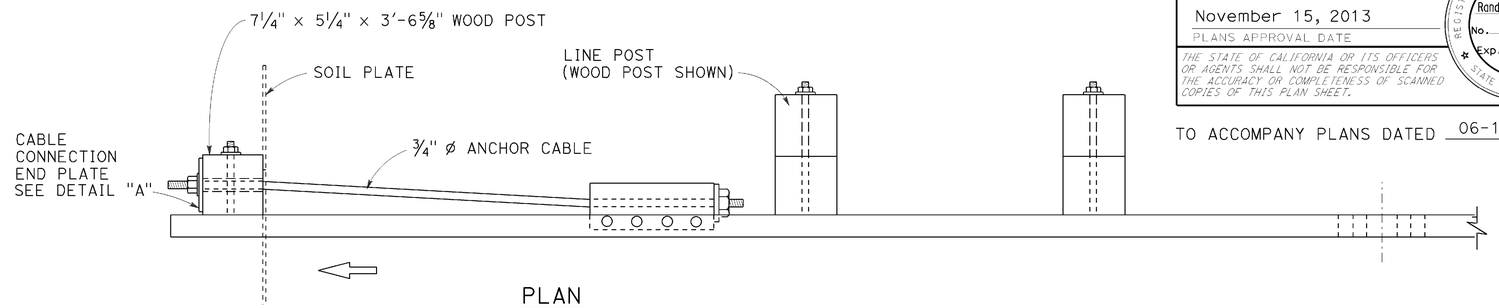

PLAN

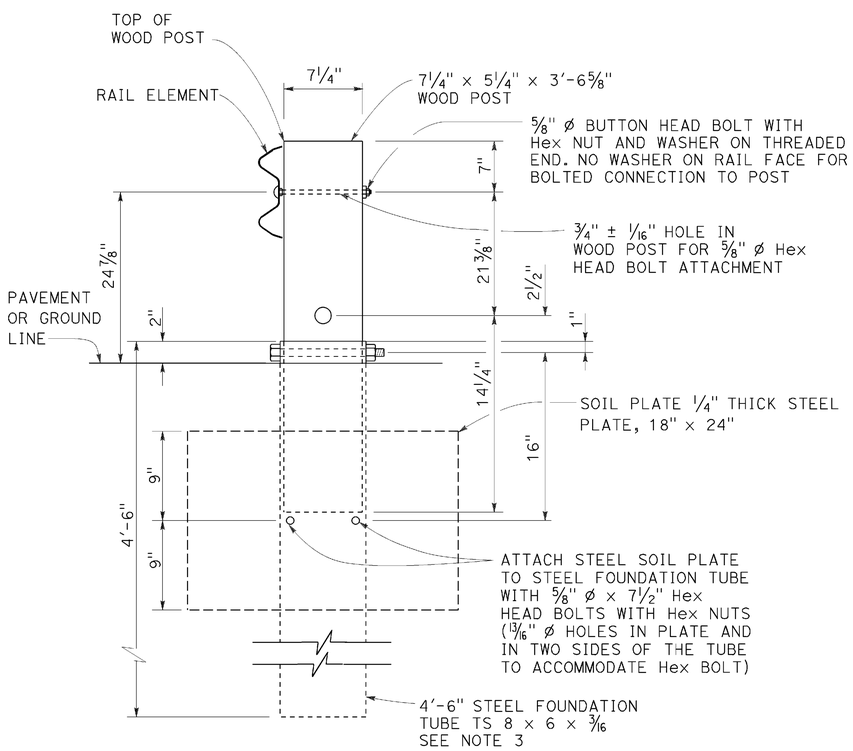

SECTION A-A

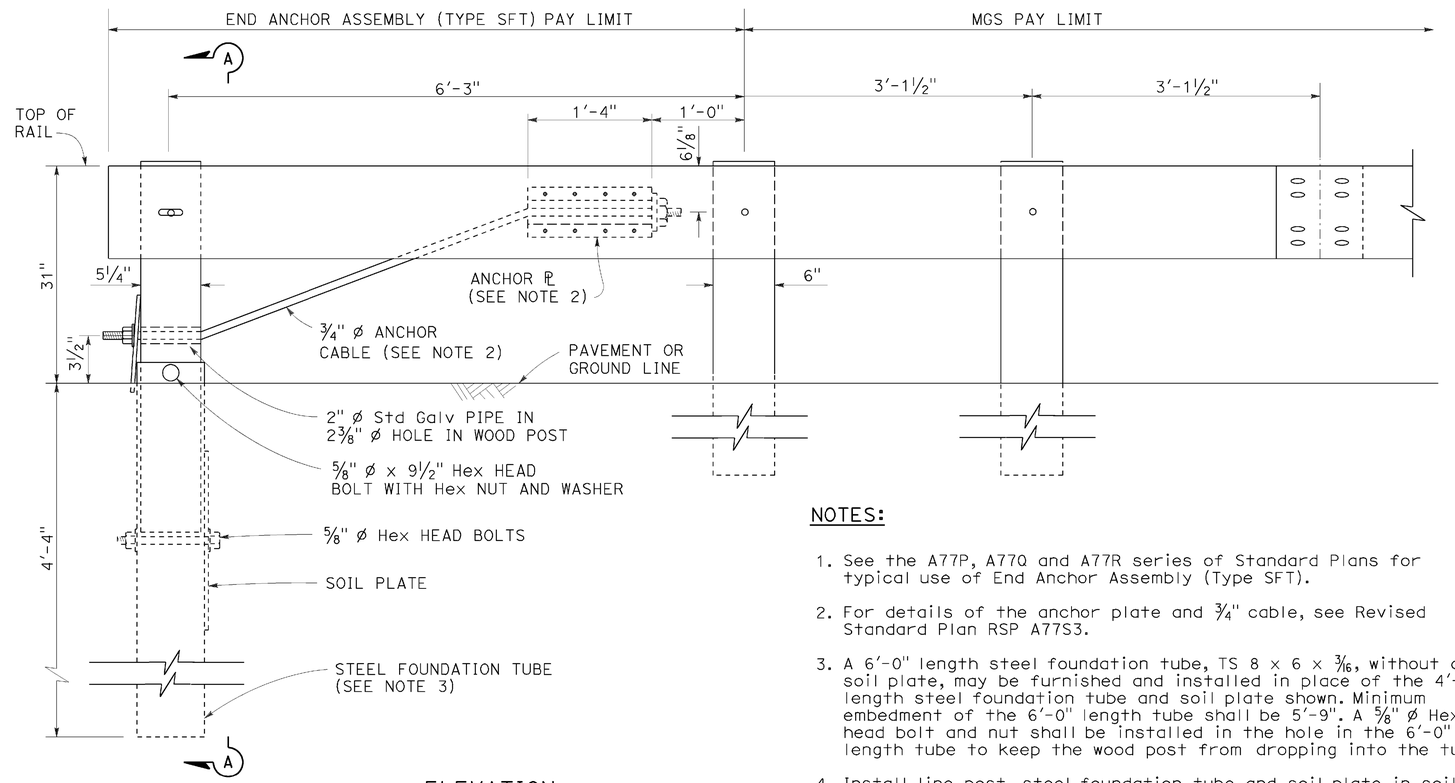

ELEVATION

END ANCHOR
ASSEMBLY (TYPE SFT)
See Note 1

NOTES:

1. See the A77P, A77Q and A77R series of Standard Plans for typical use of End Anchor Assembly (Type SFT).
2. For details of the anchor plate and 3/4" cable, see Revised Standard Plan RSP A77S3.
3. A 6'-0" length steel foundation tube, TS 8 x 6 x 3/16, without a soil plate, may be furnished and installed in place of the 4'-6" length steel foundation tube and soil plate shown. Minimum embedment of the 6'-0" length tube shall be 5'-9". A 5/8" ø Hex head bolt and nut shall be installed in the hole in the 6'-0" length tube to keep the wood post from dropping into the tube.
4. Install line post, steel foundation tube and soil plate in soil.

STATE OF CALIFORNIA
DEPARTMENT OF TRANSPORTATION

MIDWEST GUARDRAIL SYSTEM END ANCHOR ASSEMBLY (TYPE SFT)

NO SCALE

RSP A77S1 DATED NOVEMBER 15, 2013 SUPERSEDES RSP A77S1
DATED JULY 19, 2013 THAT SUPPLEMENTS THE STANDARD PLANS BOOK DATED 2010.

REVISED STANDARD PLAN RSP A77S1

2010 REVISED STANDARD PLAN RSP A77S1

DATE PLOTTED => 28-JUL-2016
TIME PLOTTED => 14:04

Dist	COUNTY	ROUTE	POST MILES TOTAL PROJECT	SHEET No.	TOTAL SHEETS
02	Las, Sie,Las	70, 395	3.5/3.9 R0.0/R3.1,R0.0/R5.6	163	236

Randell D. Hiatt
REGISTERED CIVIL ENGINEER

July 19, 2013
PLANS APPROVAL DATE

REGISTERED PROFESSIONAL ENGINEER
Randell D. Hiatt
No. C50200
Exp. 6-30-15
CIVIL
STATE OF CALIFORNIA

THE STATE OF CALIFORNIA OR ITS OFFICERS OR AGENTS SHALL NOT BE RESPONSIBLE FOR THE ACCURACY OR COMPLETENESS OF SCANNED COPIES OF THIS PLAN SHEET.

TO ACCOMPANY PLANS DATED 06-15-16

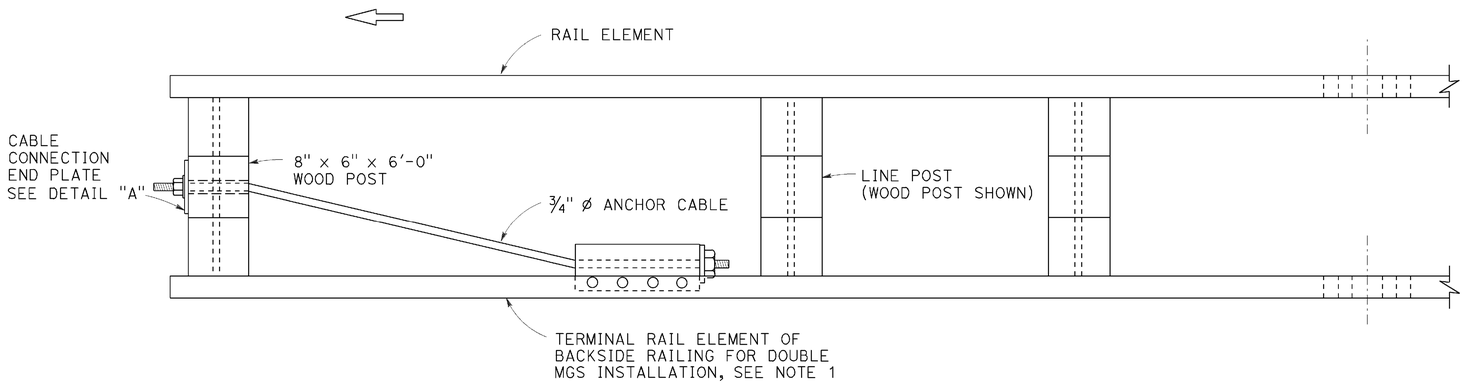

PLAN

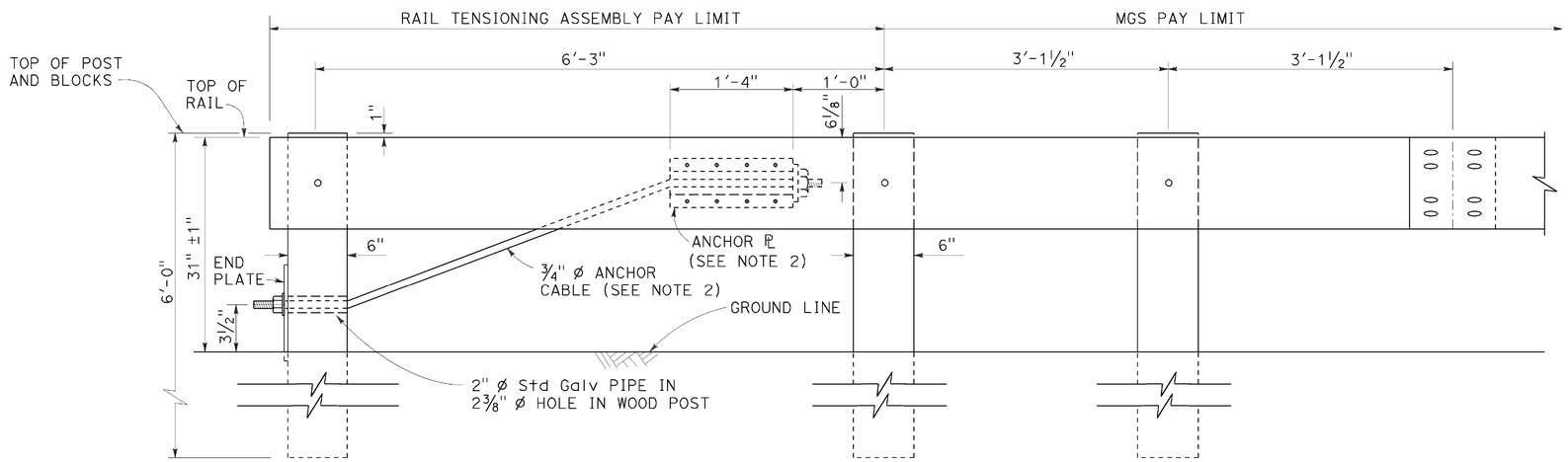

ELEVATION
RAIL TENSIONING ASSEMBLY
See Note 1

NOTES:

1. See Revised Standard Plans RSP A77Q3 and RSP A77R1 for typical use of rail tensioning assembly.
2. For details of the anchor plate and ¾" cable, see Revised Standard Plan RSP A77S3.

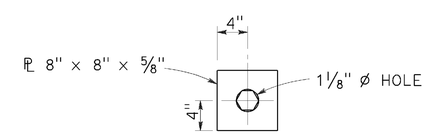

DETAIL "A"
CABLE CONNECTION END PLATE

STATE OF CALIFORNIA
DEPARTMENT OF TRANSPORTATION

MIDWEST GUARDRAIL SYSTEM RAIL TENSIONING ASSEMBLY

NO SCALE

RSP A77S2 DATED JULY 19, 2013 SUPPLEMENTS THE STANDARD PLANS BOOK DATED 2010.

REVISED STANDARD PLAN RSP A77S2

2010 REVISED STANDARD PLAN RSP A77S2

DATE PLOTTED => 28-JUL-2016
TIME PLOTTED => 14:05

Dist	COUNTY	ROUTE	POST MILES TOTAL PROJECT	SHEET No.	TOTAL SHEETS
02	Las, Sie,Las	70, 395	3.5/3.9 R0.0/R3.1,R0.0/R5.6	164	236

Randell D. Hiatt
REGISTERED CIVIL ENGINEER

November 15, 2013
PLANS APPROVAL DATE

REGISTERED PROFESSIONAL ENGINEER
Randell D. Hiatt
No. C50200
Exp. 6-30-15
CIVIL
STATE OF CALIFORNIA

THE STATE OF CALIFORNIA OR ITS OFFICERS OR AGENTS SHALL NOT BE RESPONSIBLE FOR THE ACCURACY OR COMPLETENESS OF SCANNED COPIES OF THIS PLAN SHEET.

TO ACCOMPANY PLANS DATED 06-15-16

2010 REVISED STANDARD PLAN RSP A77S3

NOTE:

See Revised Standard Plans RSP A77S1, RSP A77S2 and RSP A77T1 for typical use of anchor cable and anchor plate.

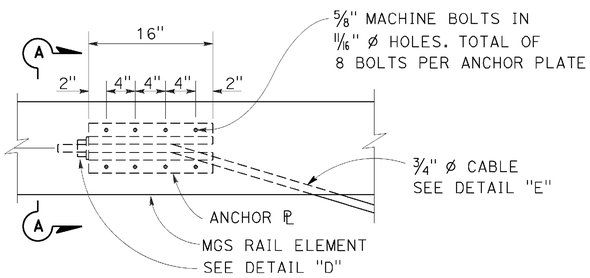

ANCHOR PLATE DETAIL
(MGS shown, TBB similar)

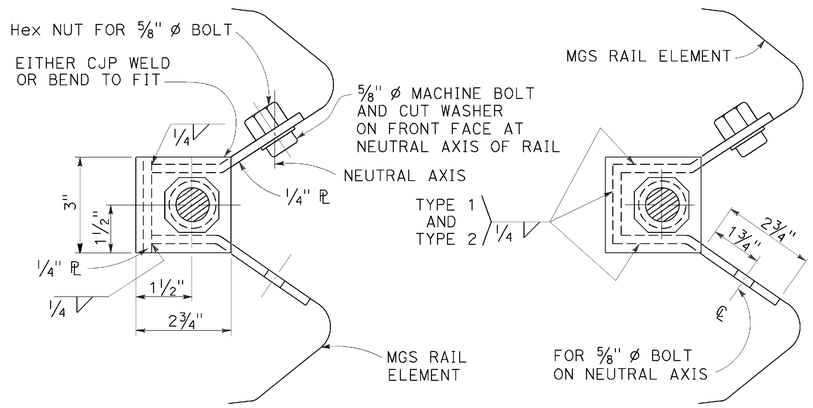

NOTE:
Dimensioning applies to both types.

SECTION A-A
(ALTERNATIVE TYPE 1)

SECTION A-A
(ALTERNATIVE TYPE 2)

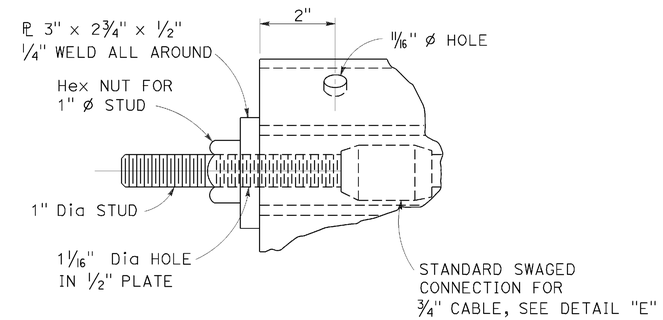

DETAIL "D"

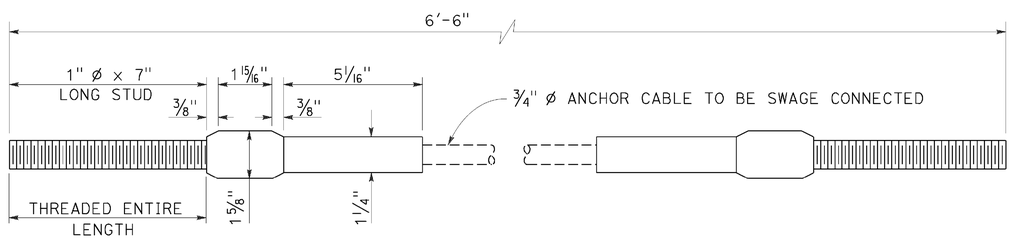

ANCHOR CABLE WITH
SWAGED FITTING AND STUD
DETAIL "E"

STATE OF CALIFORNIA
DEPARTMENT OF TRANSPORTATION

METAL RAILING ANCHOR CABLE AND ANCHOR PLATE DETAILS

NO SCALE

RSP A77S3 DATED NOVEMBER 15, 2013 SUPERSEDES RSP A77S3
DATED JULY 19, 2013 THAT SUPPLEMENTS THE STANDARD PLANS BOOK DATED 2010.

REVISED STANDARD PLAN RSP A77S3

DATE PLOTTED => 28-JUL-2016
TIME PLOTTED => 14:05

Dist	COUNTY	ROUTE	POST MILES TOTAL PROJECT	SHEET No.	TOTAL SHEETS
02	Las, Sie,Las	70, 395	3.5/3.9 R0.0/R3.1,R0.0/R5.6	165	236

Randell D. Hiatt
REGISTERED CIVIL ENGINEER

November 15, 2013
PLANS APPROVAL DATE

REGISTERED PROFESSIONAL ENGINEER Randell D. Hiatt No. C50200 Exp. 6-30-15 CIVIL STATE OF CALIFORNIA

THE STATE OF CALIFORNIA OR ITS OFFICERS OR AGENTS SHALL NOT BE RESPONSIBLE FOR THE ACCURACY OR COMPLETENESS OF SCANNED COPIES OF THIS PLAN SHEET.

TO ACCOMPANY PLANS DATED 06-15-16

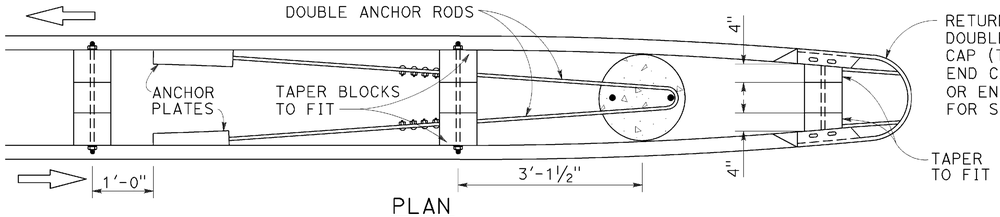

PLAN
See Note 4

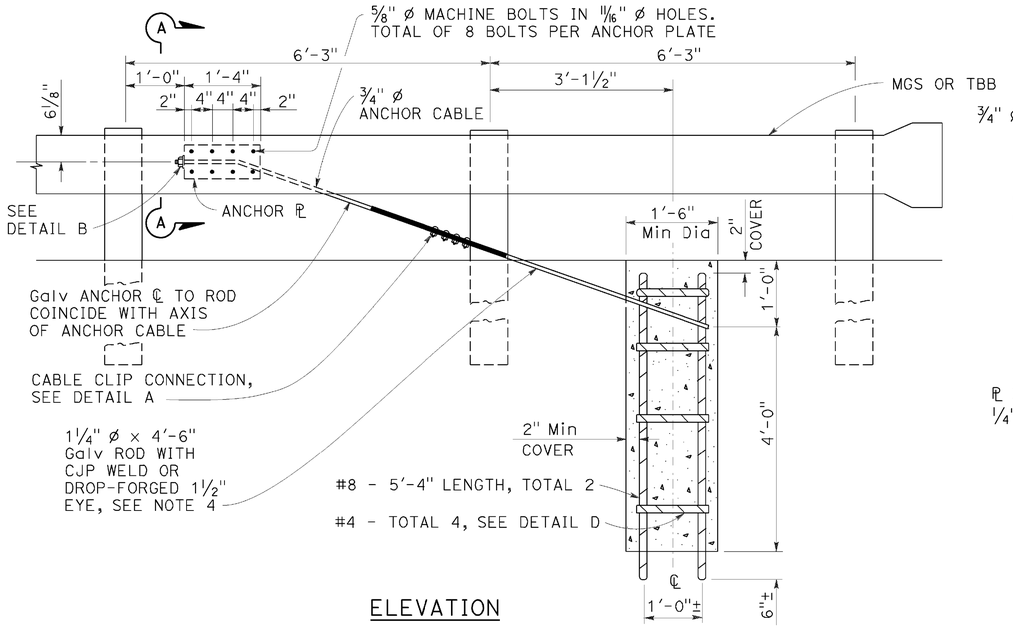

ELEVATION
END ANCHOR ASSEMBLY
(TYPE CA)
(Wood post, MGS shown, details similar for Thrie Beam Barrier.)

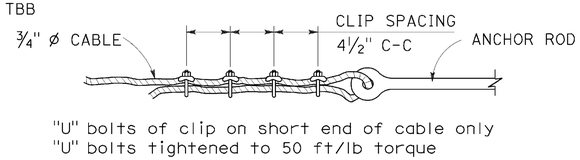

DETAIL A
CABLE CLIP CONNECTION

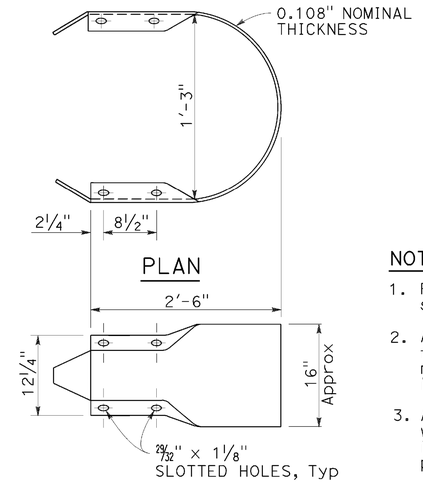

ELEVATION
RETURN CAP
(TYPE A)

NOTES:

1. For typical use of this type of end anchor, see Revised Standard Plan RSP A78E2.
2. Anchor cable to be parallel to railing for straight runs of rail. Anchor cable may have angle point at anchor plate if railing is curved.
3. Anchor rod hooks to be in contact with anchor reinforcement when concrete is placed. Wire ties may be used to position anchor rods.
4. Single sided railing installations require only one anchor plate, anchor rod and anchor cable. Single sided railing will not have a rail element or blockouts on backside of line posts as shown in the plan view.

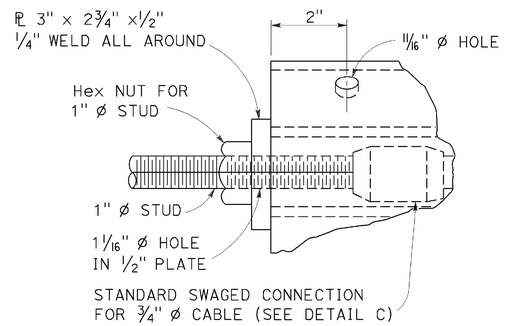

DETAIL B

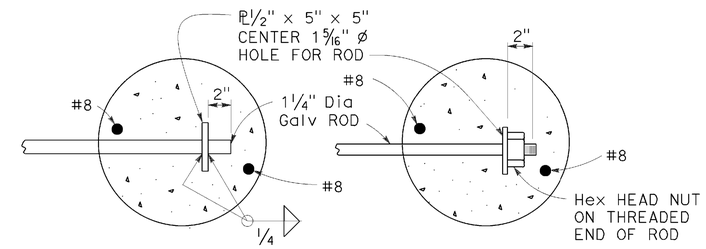

OPTIONAL ENDS ON SINGLE ANCHOR ROD
(Not to be used for double anchors)

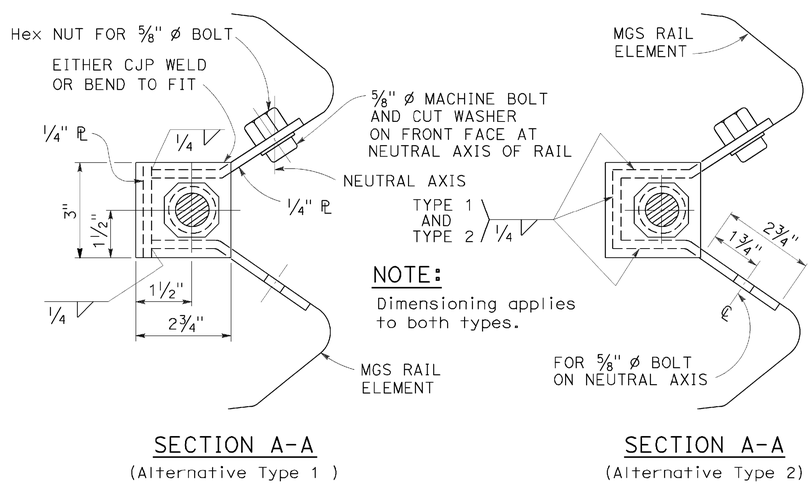

NOTE:
Dimensioning applies to both types.

SECTION A-A
(Alternative Type 1)

SECTION A-A
(Alternative Type 2)

ANCHOR PLATE DETAILS

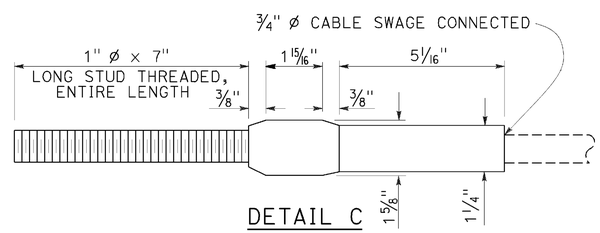

DETAIL C

ANCHOR CABLE WITH
SWAGED FITTING AND STUD

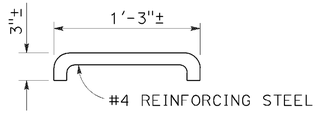

DETAIL D

NOTE:
Use two 1¼" ø Galv rods with hook and eye for double MGS anchor.

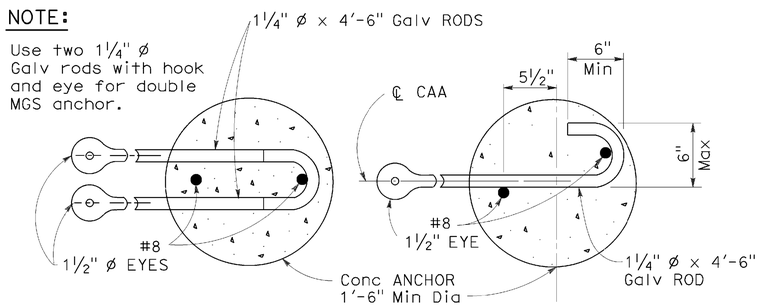

DOUBLE ANCHOR SINGLE ANCHOR

ANCHOR RODS

STATE OF CALIFORNIA
DEPARTMENT OF TRANSPORTATION

METAL RAILING END ANCHOR ASSEMBLY (TYPE CA)

NO SCALE

RSP A77T1 DATED NOVEMBER 15, 2013 SUPERSEDES RSP A77T1 DATED JULY 19, 2013 THAT SUPPLEMENTS THE STANDARD PLANS BOOK DATED 2010.

REVISED STANDARD PLAN RSP A77T1

2010 REVISED STANDARD PLAN RSP A77T1

DATE PLOTTED => 28-JUL-2016
TIME PLOTTED => 14:05

Dist	COUNTY	ROUTE	POST MILES TOTAL PROJECT	SHEET No.	TOTAL SHEETS
02	Las, Sie,Las	70, 395	3.5/3.9 R0.0/R3.1,R0.0/R5.6	166	236

Randell D. Hiatt
REGISTERED CIVIL ENGINEER

July 19, 2013
PLANS APPROVAL DATE

REGISTERED PROFESSIONAL ENGINEER Randell D. Hiatt No. C50200 Exp. 6-30-15 CIVIL STATE OF CALIFORNIA

THE STATE OF CALIFORNIA OR ITS OFFICERS OR AGENTS SHALL NOT BE RESPONSIBLE FOR THE ACCURACY OR COMPLETENESS OF SCANNED COPIES OF THIS PLAN SHEET.

TO ACCOMPANY PLANS DATED 06-15-16

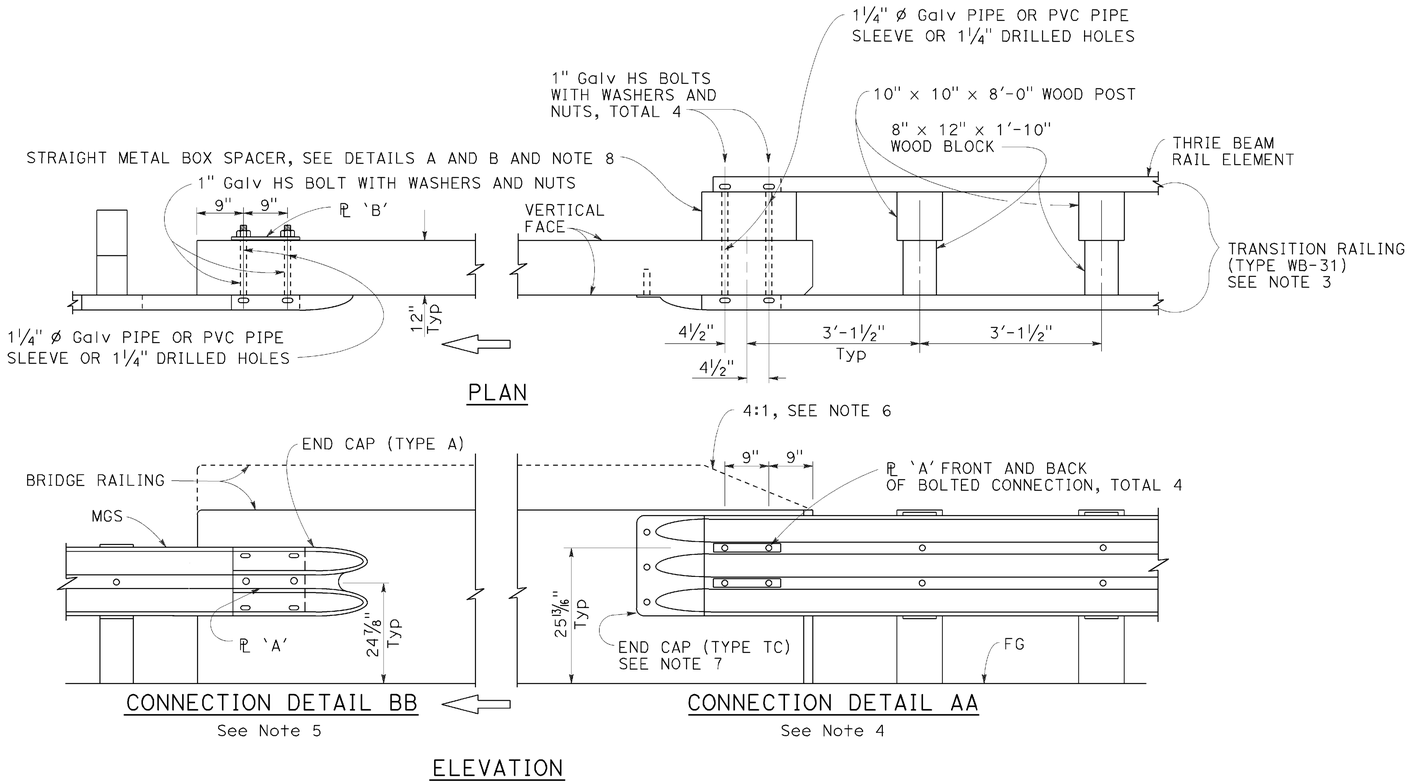

MIDWEST GUARDRAIL SYSTEM CONNECTION TO BRIDGE RAILING WITHOUT SIDEWALK

NOTES:

1. See Revised Standard Plan RSP A77U2 for additional connection details to bridges without sidewalks.
2. Additional details of posts, blocks and hardware are shown on Revised Standard Plans RSP A77M1, RSP A77N1 and RSP A77N2.
3. For additional details of Transition Railing (Type WB-31), see Revised Standard Plan RSP A77U4. Transition Railing (Type WB-31) transitions the 12 gauge MGS railing section to a heavier gage nested thrie beam railing section which is connected to the concrete bridge railing.
4. For typical use of Connection Detail AA, see Layout Types 12A and 12B on Revised Standard Plan RSP A77Q1, Layout Types 12C and 12D on Revised Standard Plan RSP A77Q2, and Layout Type 12E on Revised Standard Plan RSP A77Q3.
5. For typical use of Connection Detail BB, see Layout Type 12D (structure departure railing connection) on Revised Standard Plan RSP A77Q2 and Layout Type 12DD on Revised Standard Plan RSP A77Q5.
6. Where the height of the bridge railing exceeds the height of the thrie beam railing by more than 1" at Connection Detail AA, taper the top of the end of the bridge railing at 4:1 to match the top elevation of the thrie beam rail.
7. For details of End Cap (Type TC), see Revised Standard Plan RSP A77U4.
8. See Revised Standard Plan RSP A77U4 for additional details regarding depth dimension for straight metal box spacer.

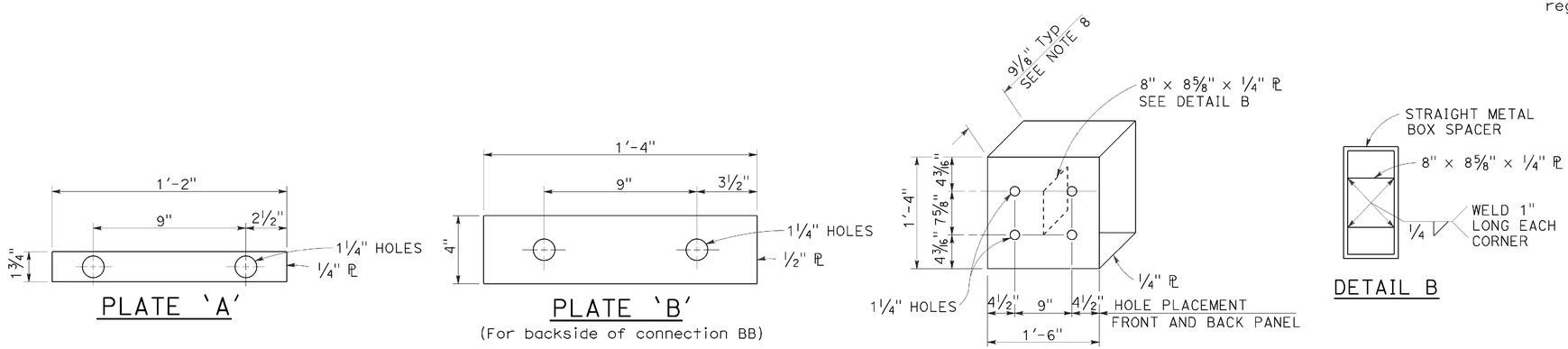

STRAIGHT METAL BOX SPACER

STATE OF CALIFORNIA
DEPARTMENT OF TRANSPORTATION

MIDWEST GUARDRAIL SYSTEM CONNECTIONS TO BRIDGE RAILINGS WITHOUT SIDEWALKS DETAILS No. 1

NO SCALE

RSP A77U1 DATED JULY 19, 2013 SUPPLEMENTS THE STANDARD PLANS BOOK DATED 2010.

REVISED STANDARD PLAN RSP A77U1

2010 REVISED STANDARD PLAN RSP A77U1

DATE PLOTTED => 28-JUL-2016
TIME PLOTTED => 14:06

Dist	COUNTY	ROUTE	POST MILES TOTAL PROJECT	SHEET No.	TOTAL SHEETS
02	Las, Sie,Las	70, 395	3.5/3.9 R0.0/R3.1,R0.0/R5.6	167	236

Randell D. Hiatt
REGISTERED CIVIL ENGINEER

July 19, 2013
PLANS APPROVAL DATE

REGISTERED PROFESSIONAL ENGINEER
Randell D. Hiatt
No. C50200
Exp. 6-30-15
CIVIL
STATE OF CALIFORNIA

THE STATE OF CALIFORNIA OR ITS OFFICERS OR AGENTS SHALL NOT BE RESPONSIBLE FOR THE ACCURACY OR COMPLETENESS OF SCANNED COPIES OF THIS PLAN SHEET.

TO ACCOMPANY PLANS DATED 06-15-16

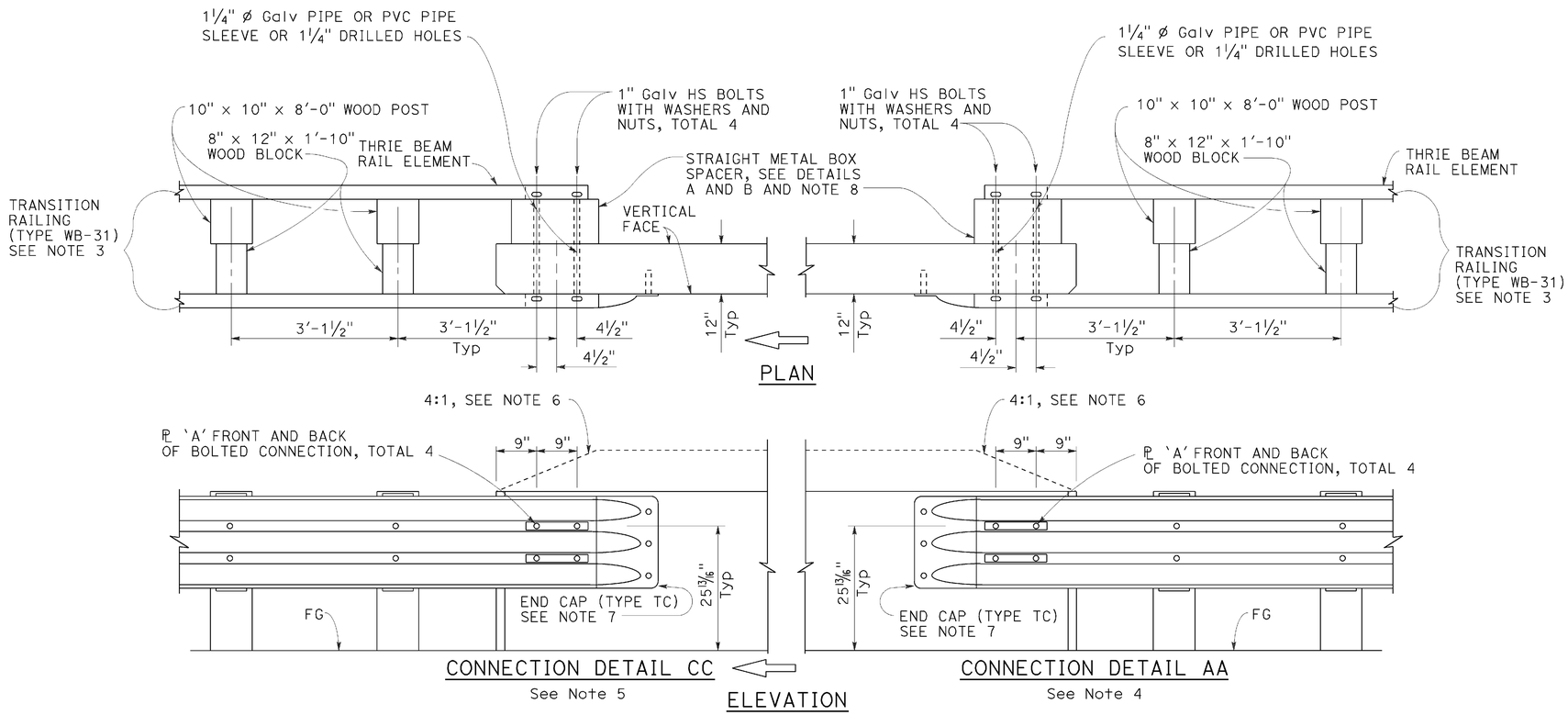

MIDWEST GUARDRAIL SYSTEM CONNECTION TO BRIDGE RAILING WITHOUT SIDEWALK

NOTES:

1. See Revised Standard Plan RSP A77U1 for additional connection details to bridges without sidewalks.
2. Additional details of posts, blocks and hardware are shown on Revised Standard Plans RSP A77M1, RSP A77N1 and RSP A77N2.
3. For additional details of Transition Railing (Type WB-31), see Revised Standard Plan RSP A77U4. Transition Railing (Type WB-31) transitions the 12 gauge MGS railing section to a heavier gage nested thrie beam railing section which is connected to the concrete bridge railing.
4. For typical use of Connection Detail AA, see Layout Types 12A and 12B on Revised Standard Plan RSP A77Q1, Layout Types 12C and 12D on Revised Standard Plan RSP A77Q2, and Layout Type 12E on Revised Standard Plan RSP A77Q3.
5. For typical use of Connection Detail CC, see Layout Types 12AA and 12BB on Revised Standard Plan RSP A77Q4 and Layout Type 12CC on Revised Standard Plan RSP A77Q5.
6. Where the height of the bridge railing exceeds the height of the thrie beam railing by more than 1" at Connection Detail AA and connection Detail CC, taper the top of the end of the bridge railing at 4:1 to match the top elevation of the thrie beam railing.
7. For details of End Cap (Type TC), see Revised Standard Plan RSP A77U4.
8. See Revised Standard Plan RSP A77U4 for additional details regarding depth dimension for straight metal box spacer.

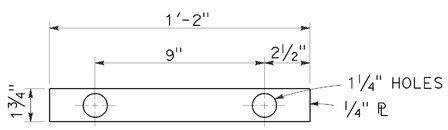

PLATE 'A'

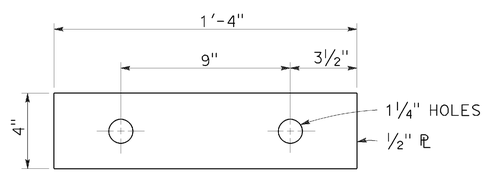

PLATE 'B'
(For backside of connection BB)

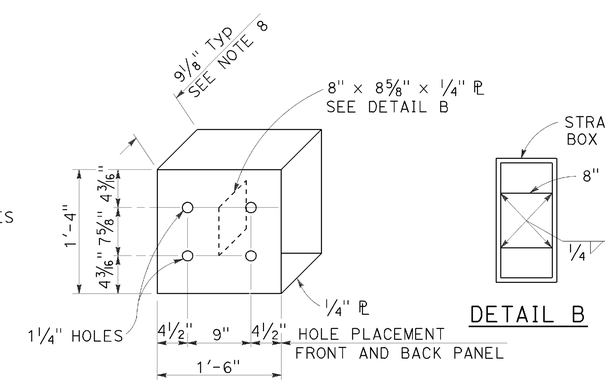

DETAIL A

STRAIGHT METAL BOX SPACER

STATE OF CALIFORNIA
DEPARTMENT OF TRANSPORTATION

MIDWEST GUARDRAIL SYSTEM CONNECTIONS TO BRIDGE RAILINGS WITHOUT SIDEWALKS DETAILS No. 2

NO SCALE

RSP A77U2 DATED JULY 19, 2013 SUPPLEMENTS THE STANDARD PLANS BOOK DATED 2010.

REVISED STANDARD PLAN RSP A77U2

2010 REVISED STANDARD PLAN RSP A77U2

DATE PLOTTED => 28-JUL-2016
TIME PLOTTED => 14:06

Dist	COUNTY	ROUTE	POST MILES TOTAL PROJECT	SHEET No.	TOTAL SHEETS
02	Las, Sie,Las	70, 395	3.5/3.9 R0.0/R3.1,R0.0/R5.6	168	236

Randell D. Hiatt
REGISTERED CIVIL ENGINEER

January 23, 2015
PLANS APPROVAL DATE

REGISTERED PROFESSIONAL ENGINEER Randell D. Hiatt No. C50200 Exp. 6-30-15 CIVIL STATE OF CALIFORNIA

THE STATE OF CALIFORNIA OR ITS OFFICERS OR AGENTS SHALL NOT BE RESPONSIBLE FOR THE ACCURACY OR COMPLETENESS OF SCANNED COPIES OF THIS PLAN SHEET.

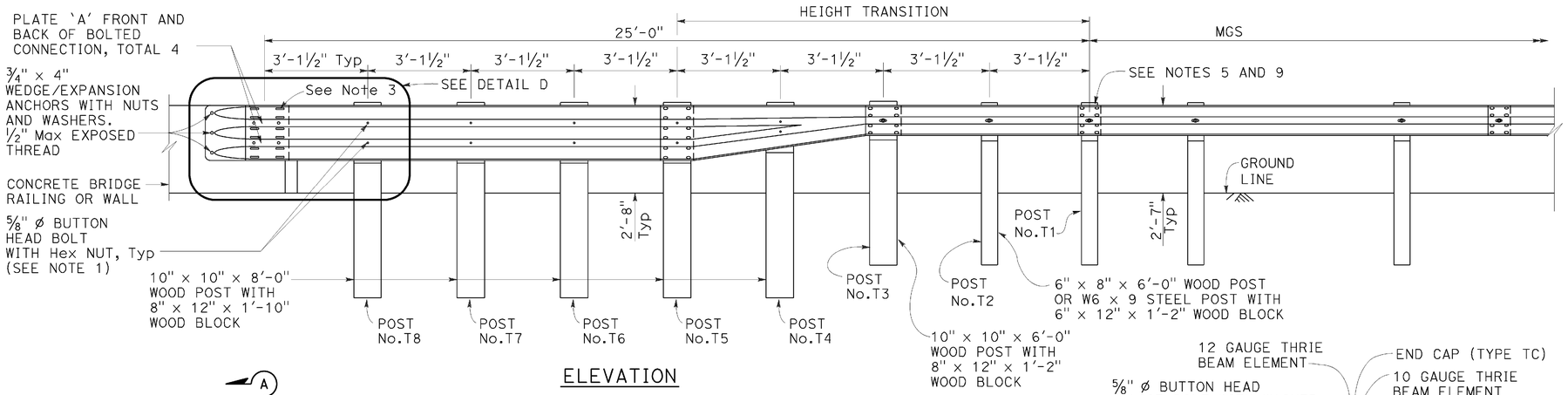

ELEVATION

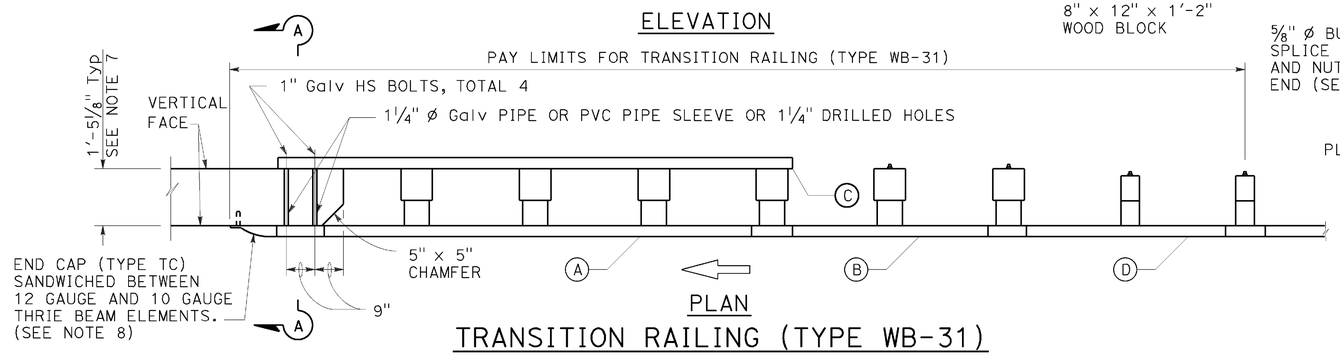

PLAN

TRANSITION RAILING (TYPE WB-31)

(No Blockout Attachment)

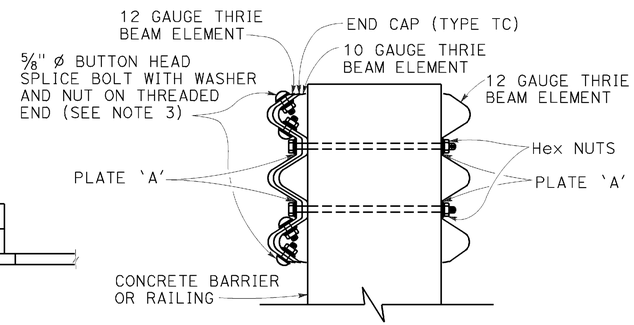

SECTION A-A

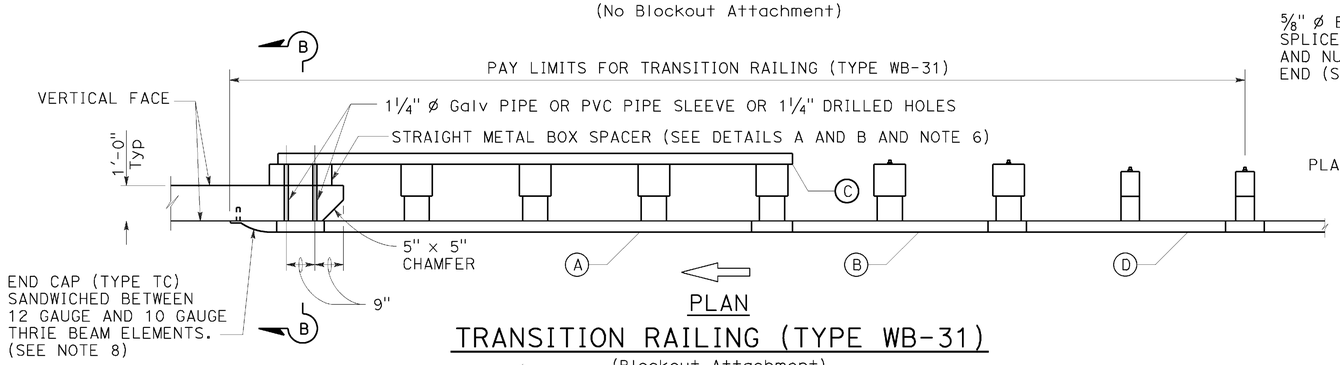

PLAN

TRANSITION RAILING (TYPE WB-31)

(Blockout Attachment)

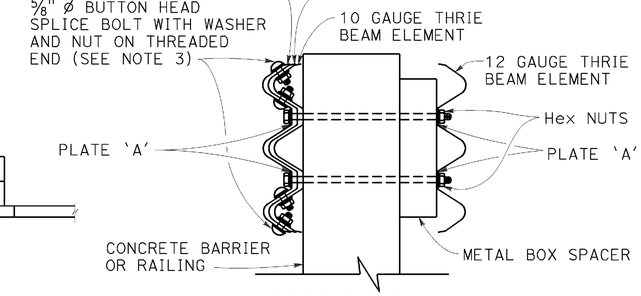

SECTION B-B

NOTES:

TO ACCOMPANY PLANS DATED 06-15-16

1. Use 5/8" ø Button head bolts and hex nuts for connections to posts. No washer on rail face for bolted connections to post.
2. The nested rail elements, end cap, and 'W' beam to thrie beam element may be spliced together prior to bolting the elements to the wood post and concrete barrier or railing.
3. Exterior splice bolt holes for rail element splices at Post No. T5 and the connection to the concrete barrier or railing shall be the standard 29/32" x 1 1/8" slot size. Interior splice bolt holes at these locations may be increased up to 1 1/4" ø. Only the top 4 and the bottom 4 splice bolts with washers and nuts are required for rail splices at Post No. T5 and the connection to the concrete barrier or railing.
4. The top elevation of Posts No. T2 through No. T7 shall not project more than 1" above the top elevation of the rail element.
5. Typically, the railing connected to Transition Railing (Type WB-31) will be either standard railing section of MGS with height transition ratio of 150:1 or a Caltrans approved 31" end treatment attached to Post No. T1.
6. The depth of the metal box spacer varies from the 9 1/8" to 1 1/2" and is dependent on the width of the concrete railing or wall. The combined dimension for the depth of the metal box spacer plus the width of railing or wall is typically 21 1/8". Where the space between the backside of the concrete railing or wall and the rear thrie beam element is less than 1 1/2", metal plates similar to Plate 'A' are to be used as spacers.
7. Where the width of the concrete railing or wall is greater than 17 1/8", wood blocks are to be used to fill the space created between the backside of Posts No. T5 through No. T8 and the rear thrie beam element. These wood blocks shall be 8" in width and 1'-2" in length. The dimension between the front thrie beam element and the rear thrie beam element is to match the width of the concrete railing or wall.
8. End cap may be installed over 12 gauge and 10 gauge thrie beam elements where transition railing is installed on the departure end of bridge railing.
9. Conform standard railing section height to 31" at Post No. T1 using height transition ratio of 150:1.

LEGEND:

(A) NESTED THRIE BEAM ELEMENTS (ONE 12 GAUGE ELEMENT NESTED OVER ONE 10 GAUGE ELEMENT).

(B) ONE ASYMMETRICAL 10 GAUGE "W" BEAM TO THRIE BEAM ELEMENT.

(C) ONE 12 GAUGE THRIE BEAM ELEMENT.

(D) ONE 10 GAUGE "W" BEAM RAIL ELEMENT (7'-3 1/2" LENGTH)

10 GAUGE = 0.138" THICK
12 GAUGE = 0.108" THICK

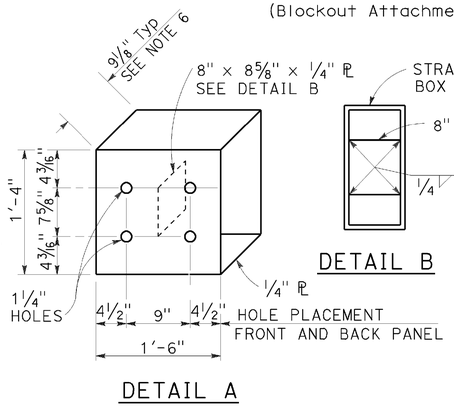

DETAIL A

STRAIGHT METAL BOX SPACER

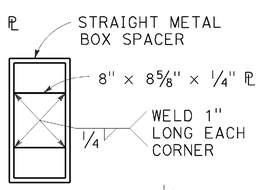

DETAIL B

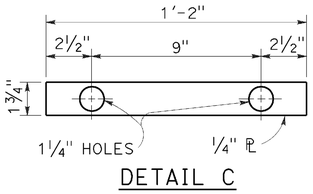

DETAIL C

PLATE 'A'

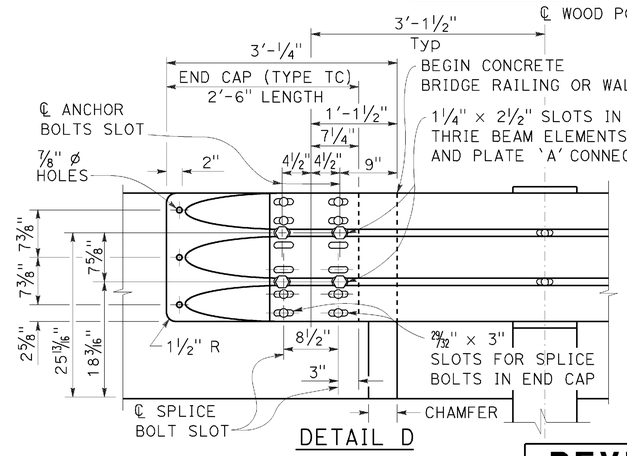

DETAIL D

MIDWEST GUARDRAIL SYSTEM TRANSITION RAILING (TYPE WB-31)

NO SCALE

RSP A77U4 DATED JANUARY 23, 2015 SUPERSEDES RSP A77U4 DATED NOVEMBER 15, 2013 AND RSP A77U4 DATED JULY 19, 2013 THAT SUPPLEMENTS THE STANDARD PLANS BOOK DATED 2010.

STATE OF CALIFORNIA
DEPARTMENT OF TRANSPORTATION

REVISED STANDARD PLAN RSP A77U4

2010 REVISED STANDARD PLAN RSP A77U4

DATE PLOTTED => 28-JUL-2016
TIME PLOTTED => 14:06

Dist	COUNTY	ROUTE	POST MILES TOTAL PROJECT	SHEET No.	TOTAL SHEETS
02	Las, Sie,Las	70, 395	3.5/3.9 R0.0/R3.1,R0.0/R5.6	169	236

REGISTERED CIVIL ENGINEER

July 15, 2016
PLANS APPROVAL DATE

REGISTERED PROFESSIONAL ENGINEER Sukhdeep Singh Sandher No. C74893 Exp. 12-31-17 CIVIL STATE OF CALIFORNIA

THE STATE OF CALIFORNIA OR ITS OFFICERS OR AGENTS SHALL NOT BE RESPONSIBLE FOR THE ACCURACY OR COMPLETENESS OF SCANNED COPIES OF THIS PLAN SHEET.

TO ACCOMPANY PLANS DATED 06-15-16

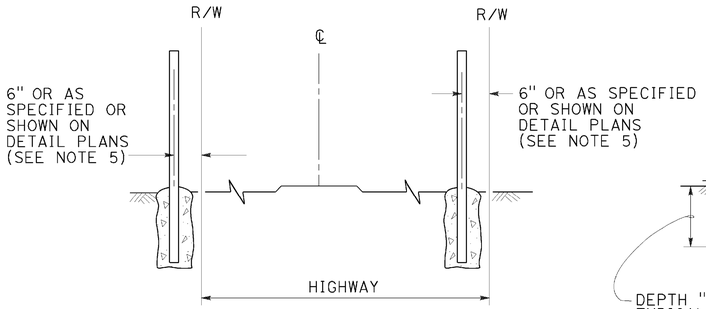

OTHER HIGHWAYS

FREEWAYS

FENCE LOCATION

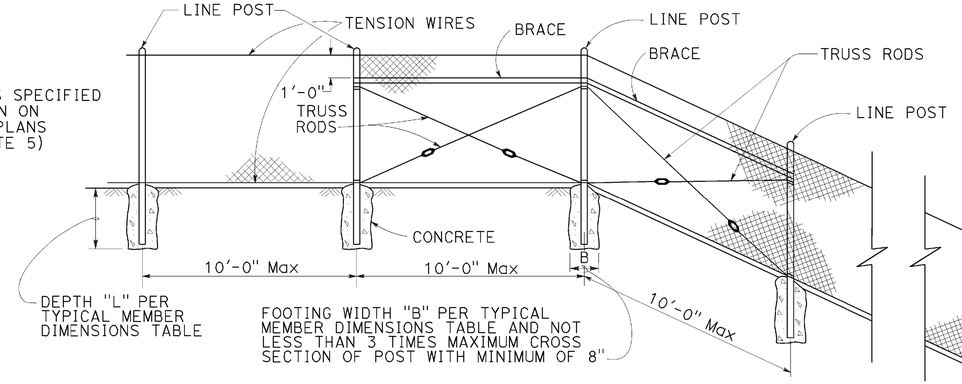

CHAIN LINK FENCE ON SHARP BREAK IN GRADE

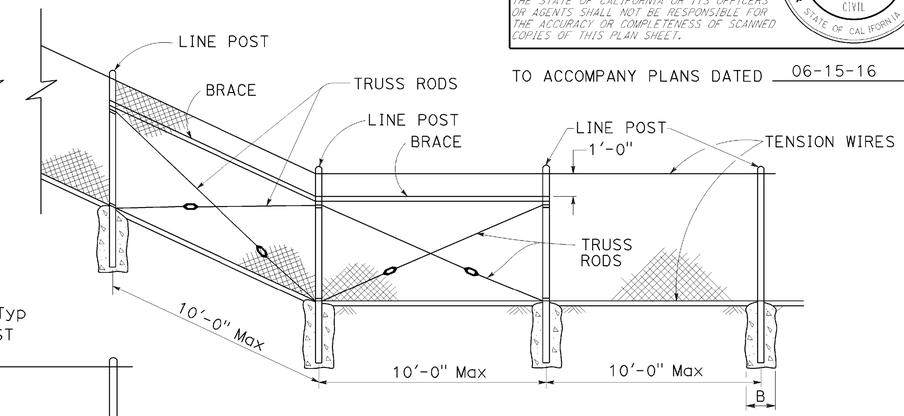

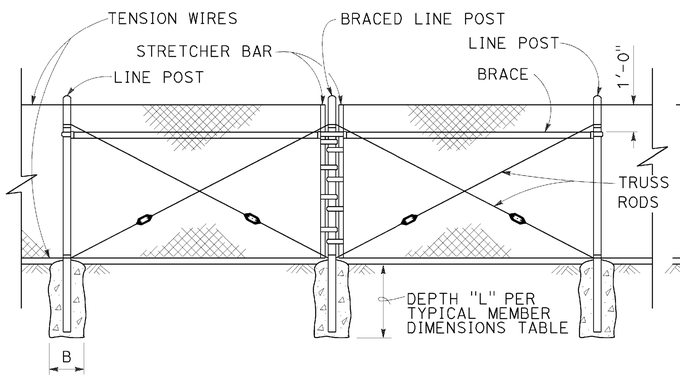

BRACED LINE POST INSTALLATION

Braced line post at intervals not exceeding 1000'

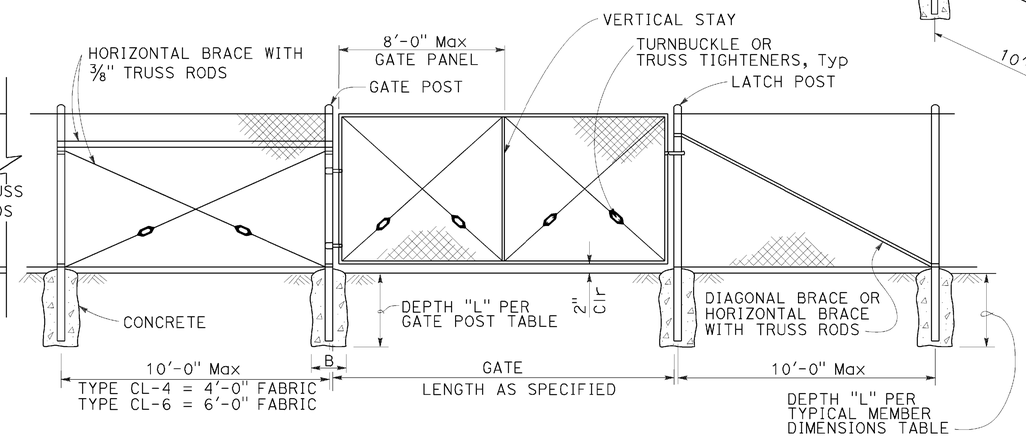

CHAIN LINK GATE INSTALLATION

GATE POST						
FENCE HEIGHT (Max)	SLATTED	B (in)	L (ft)	ROUND PIPE		
				SECTION	ROUND OD PIPE	WEIGHT (lb/ft)
5'-0"	NO	12"	2'-6"	3 Std	3.50"	7.58
6'-0"	NO	12"	2'-6"	3 Std	3.50"	7.58
8'-0"	NO	12"	3'-0"	3 Std	3.50"	7.58
10'-0"	NO	14"	3'-6"	3 Std	3.50"	7.58
5'-0"	YES	12"	3'-0"	3½ Std	4.00"	9.12
6'-0"	YES	14"	3'-6"	4 Std	4.50"	10.80
8'-0"	YES	18"	3'-6"	5 Std	5.56"	14.60
10'-0"	YES	20"	4'-0"	6 Std	6.63"	19.00

Above post dimensions and weights are minimums.
Larger sizes may be used upon approval.
Maximum Gate Width is 24'-0".

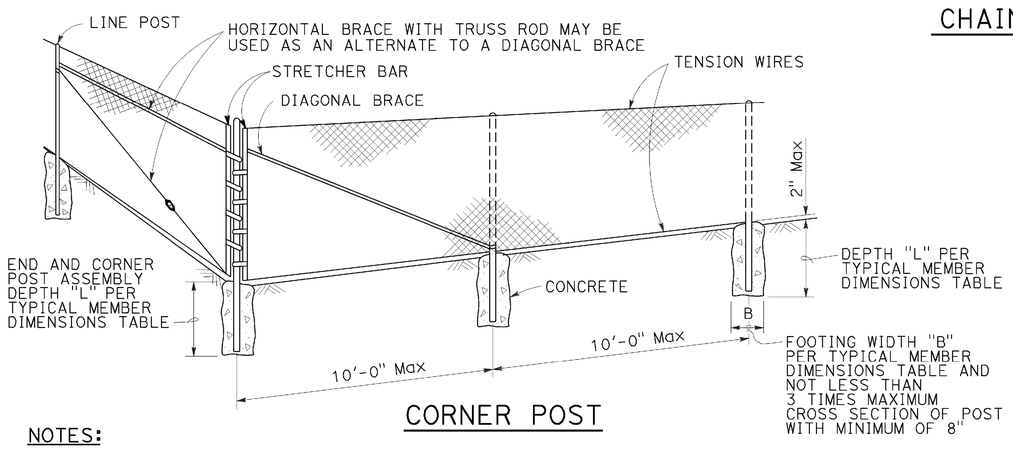

CORNER POST

TYPICAL MEMBER DIMENSIONS (See Notes)													
FENCE HEIGHT (Max)	SLATTED	B (in)	L (ft)	LINE POSTS					BRACES				
				ROUND PIPE			ROLL FORMED		ROUND PIPE			ROLL FORMED	
				SECTION	ROUND OD PIPE	WEIGHT (lb/ft)	SECTION	WEIGHT (lb/ft)	SECTION	ROUND OD PIPE	WEIGHT (lb/ft)	SECTION	WEIGHT (lb/ft)
5'-0"	NO	8"	2'-6"	1½ Std	1.90"	2.72	1.875" x 1.625"	1.85	2 Std	2.38"	3.66	1.625" x 1.250"	1.35
6'-0"	NO	10"	2'-6"	2 Std	2.38"	3.66	1.875" x 1.625"	2.40	2 Std	2.38"	3.66	1.625" x 1.250"	1.35
8'-0"	NO	12"	3'-0"	2½ Std	2.88"	5.80	3.250" x 2.500"	4.50	2 Std	2.38"	3.66	1.625" x 1.250"	1.35
10'-0"	NO	14"	3'-6"	3 Std	3.50"	7.58	3.250" x 2.500"	4.50	2½ Std	2.88"	5.80	1.625" x 1.250"	1.35
5'-0"	YES	12"	3'-0"	3½ Std	4.00"	9.12	N/A	-	2 Std	2.38"	3.66	N/A	-
6'-0"	YES	14"	3'-0"	4 Std	4.50"	10.80	N/A	-	2 Std	2.38"	3.66	N/A	-
8'-0"	YES	18"	3'-6"	5 Std	5.56"	14.60	N/A	-	2 Std	2.38"	3.66	N/A	-
10'-0"	YES	20"	4'-0"	6 Std	6.63"	19.00	N/A	-	2½ Std	2.88"	5.80	N/A	-

NOTES:

1. The table to the right shows minimum sized posts and braces complying with the specifications. Larger or heavier post and brace sizes may be used upon approval.
2. Sections shown in the tables must also comply with the strength requirements and other provisions of the Specifications.
3. Other sections which comply with the strength requirements and other provisions of the Specifications may be used upon approval.
4. Options exercised shall be uniform on any one project.
5. Offset to be 2'-0" at monument locations, measured at right angles to R/W lines. Taper to achieve offset to be at least 20'-0" long.
6. See Revised Standard Plan RSP A85B for Brace, Stretcher Bar, and Truss Tightener Details.

STATE OF CALIFORNIA
DEPARTMENT OF TRANSPORTATION

CHAIN LINK FENCE

NO SCALE

RSP A85 DATED JULY 15, 2016 SUPERSEDES RSP A85 DATED JULY 18, 2014 AND STANDARD PLAN A85 DATED MAY 20, 2011 - PAGE 112 OF THE STANDARD PLANS BOOK DATED 2010.

REVISED STANDARD PLAN RSP A85

2010 REVISED STANDARD PLAN RSP A85

DATE PLOTTED => 28-JUL-2016
TIME PLOTTED => 14:07

Dist	COUNTY	ROUTE	POST MILES TOTAL PROJECT	SHEET No.	TOTAL SHEETS
02	Las, Sie,Las	70, 395	3.5/3.9 R0.0/R3.1,R0.0/R5.6	170	236

REGISTERED CIVIL ENGINEER

July 15, 2016
PLANS APPROVAL DATE

REGISTERED PROFESSIONAL ENGINEER Sukhdeep Singh Sandher No. C74893 Exp. 12-31-17 CIVIL STATE OF CALIFORNIA

THE STATE OF CALIFORNIA OR ITS OFFICERS OR AGENTS SHALL NOT BE RESPONSIBLE FOR THE ACCURACY OR COMPLETENESS OF SCANNED COPIES OF THIS PLAN SHEET.

TO ACCOMPANY PLANS DATED 06-15-16

2010 REVISED STANDARD PLAN RSP A85A

NOTES:

1. B is not less than 3 times maximum cross section of post with minimum of 8".
2. See Revised Standard Plan RSP A85 for Chain Link Fencing dimensions.
3. See Detail A on Standard Plan A86B for connection at headwall.
4. See Detail D on Standard Plan A86B for connection at headwall.

CENTER POST		
FENCE HEIGHT (Max)	SLATTED	P
ALL HEIGHTS	NO	1'-6"
5'-0"	YES	3'-0"
6'-0"	YES	3'-0"
8'-0"	YES	3'-6"
10'-0"	YES	4'-0"

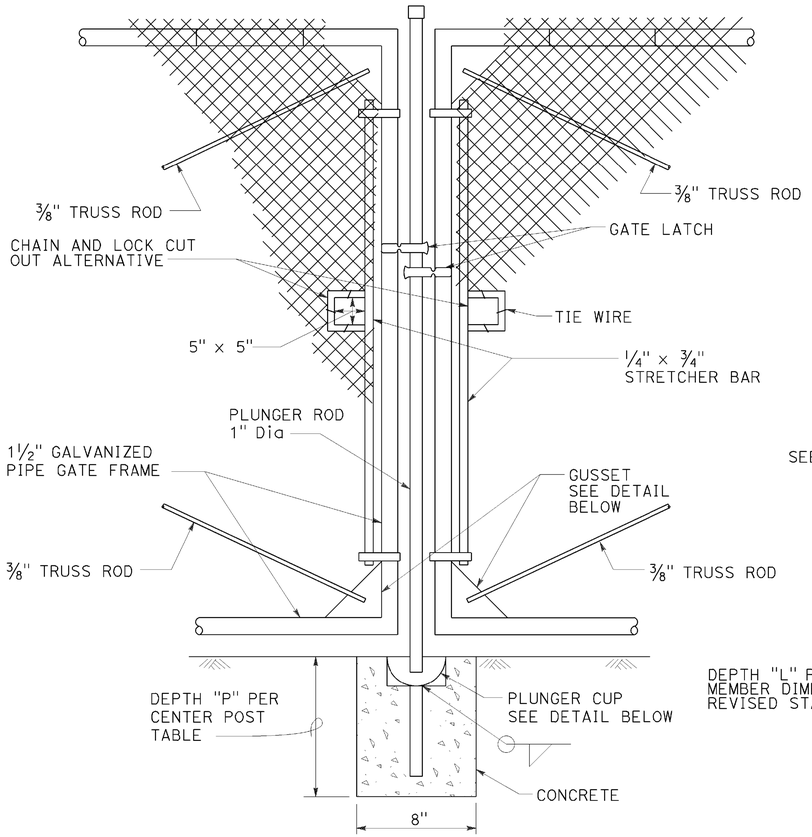

DOUBLE GATE
REMOVABLE CENTER POST

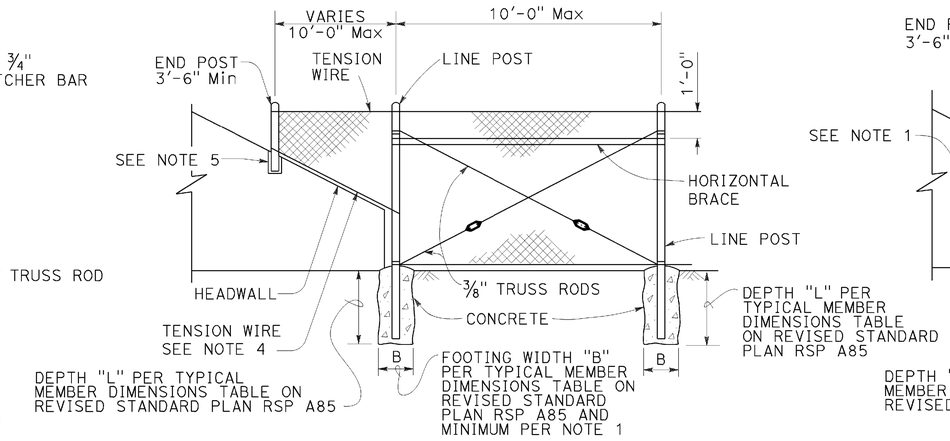

METHOD OF TYING FENCE TO HEADWALL

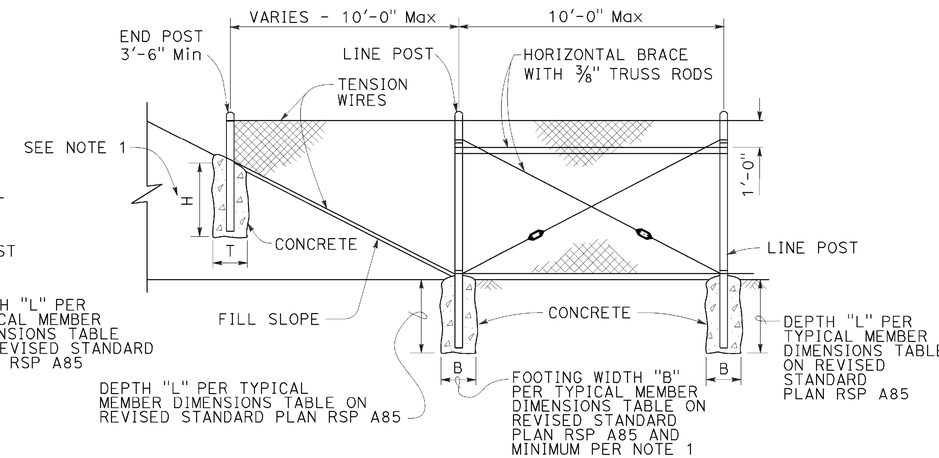

METHOD OF ERECTING FENCE FOR FILL SLOPE

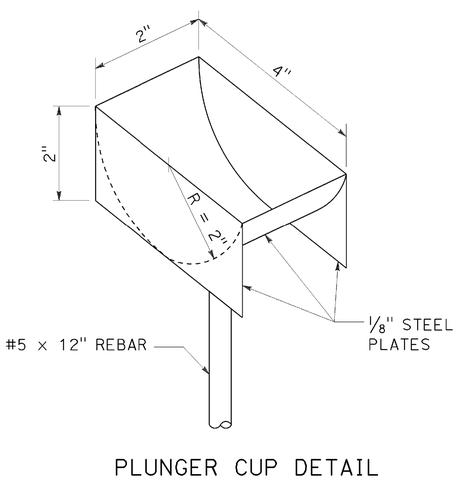

PLUNGER CUP DETAIL

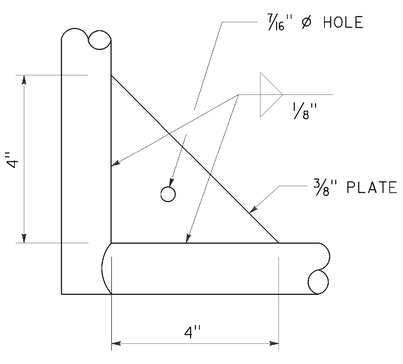

GUSSET DETAIL

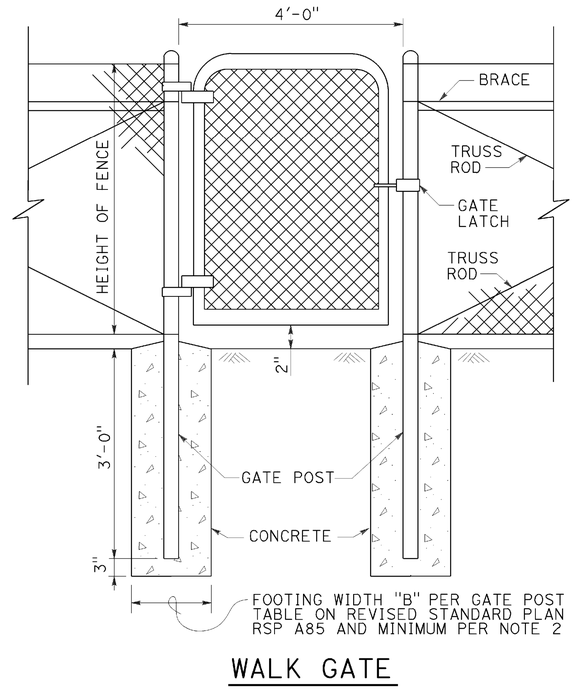

WALK GATE

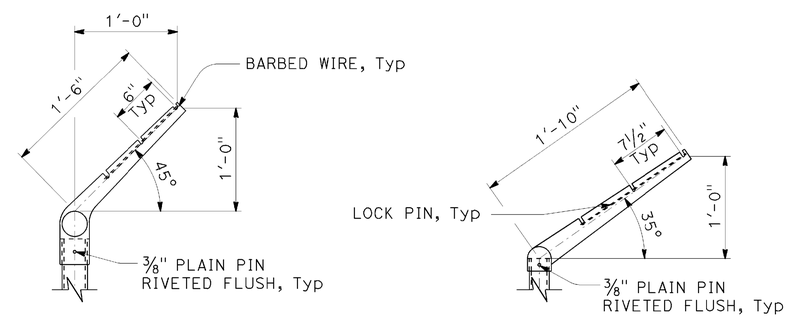

LINE POST

CORNER POST

BARBED WIRE POST TOP

STATE OF CALIFORNIA
DEPARTMENT OF TRANSPORTATION

CHAIN LINK FENCE DETAILS

NO SCALE

RSP A85A DATED JULY 15, 2016 SUPERSEDES STANDARD PLAN A85A
DATED MAY 20, 2011 - PAGE 113 OF THE STANDARD PLANS BOOK DATED 2010.

REVISED STANDARD PLAN RSP A85A

DATE PLOTTED => 28-JUL-2016
TIME PLOTTED => 14:07

Dist	COUNTY	ROUTE	POST MILES TOTAL PROJECT	SHEET No.	TOTAL SHEETS
02	Las, Sie,Las	70, 395	3.5/3.9 R0.0/R3.1,R0.0/R5.6	171	236

Glenn DeCou
REGISTERED CIVIL ENGINEER

October 19, 2012
PLANS APPROVAL DATE

REGISTERED PROFESSIONAL ENGINEER Glenn DeCou No. C34547 Exp. 9-30-13 CIVIL STATE OF CALIFORNIA

THE STATE OF CALIFORNIA OR ITS OFFICERS OR AGENTS SHALL NOT BE RESPONSIBLE FOR THE ACCURACY OR COMPLETENESS OF SCANNED COPIES OF THIS PLAN SHEET.

TO ACCOMPANY PLANS DATED 06-15-16

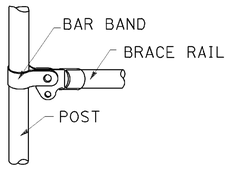

BRACE RAIL

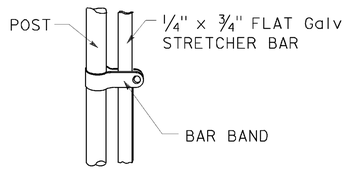

STRETCHER BAR

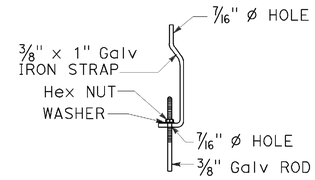

TRUSS TIGHTENER

NOTES:

1. All material for abutment connection to be galvanized.
2. The chain link fabric shall be replaced by barbed wire strands at 12" maximum centers between the double posts.
3. When the width of the culvert makes it necessary to anchor a post to the top of the culvert, a cast iron shoe or other device approved by the Engineer shall be used.
4. Fencing over stream and around headwall may also use Barbed Wire or Wire Mesh fencing with either wood post or steel post installation.
5. See Standard Plan A85 for Chain Link fence dimensions. See Standard Plan A86 for Barbed Wire and Wire Mesh fence dimensions and for wood post and steel post installation.

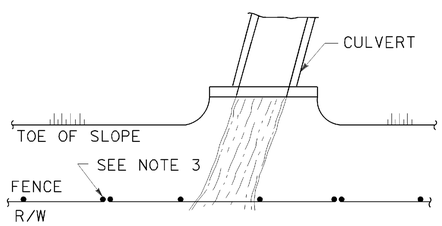

PLAN

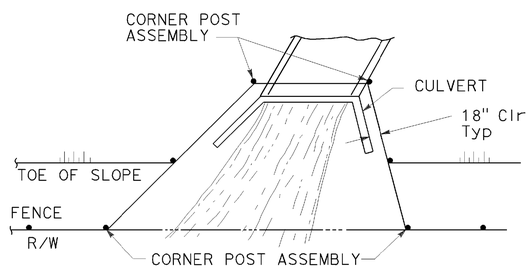

PLAN

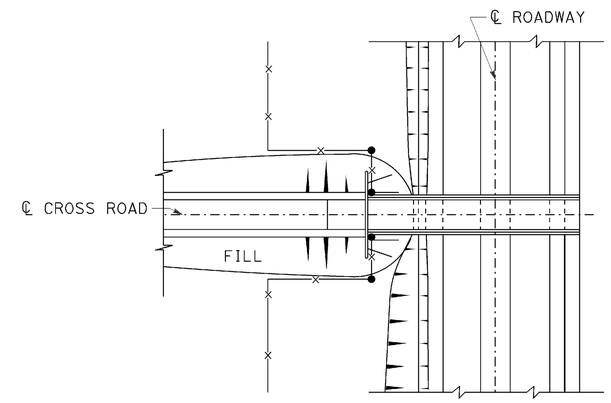

PLAN OF ROADWAY - OVERCROSSING

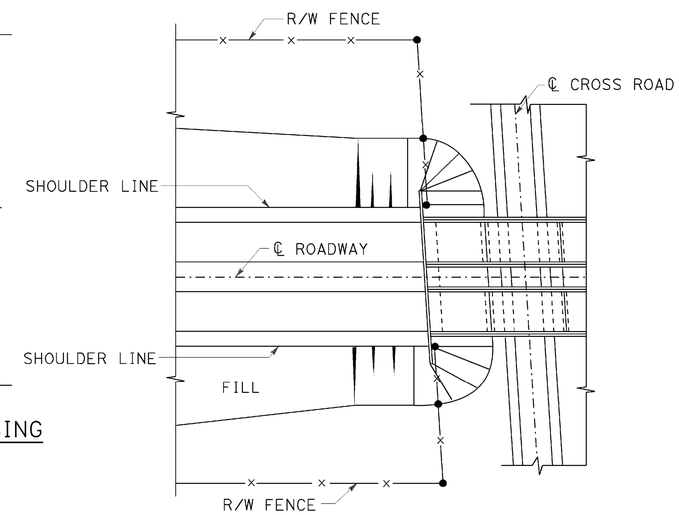

PLAN OF ROADWAY - UNDERCROSSING

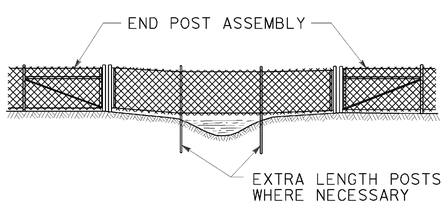

ELEVATION

INSTALLATION OVER STREAM

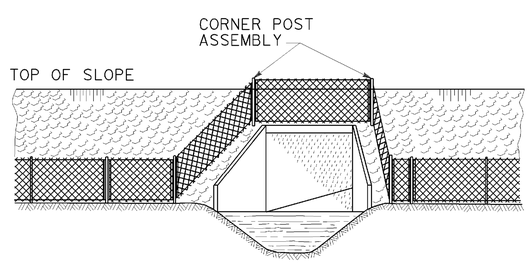

ELEVATION

INSTALLATION AROUND HEADWALL

See Note 4

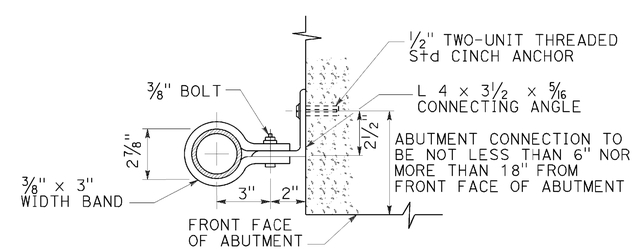

ABUTMENT CONNECTION

TYPICAL INSTALLATION AT BRIDGES

STATE OF CALIFORNIA
DEPARTMENT OF TRANSPORTATION

CHAIN LINK FENCE DETAILS

NO SCALE

RSP A85B DATED OCTOBER 19, 2012 SUPERSEDES STANDARD PLAN A85B DATED MAY 20, 2011 - PAGE 114 OF THE STANDARD PLANS BOOK DATED 2010.

REVISED STANDARD PLAN RSP A85B

2010 REVISED STANDARD PLAN RSP A85B

DATE PLOTTED => 28-JUL-2016
TIME PLOTTED => 14:08

Dist	COUNTY	ROUTE	POST MILES TOTAL PROJECT	SHEET No.	TOTAL SHEETS
02	Las, Sie,Las	70, 395	3.5/3.9 R0.0/R3.1,R0.0/R5.6	172	236

REGISTERED CIVIL ENGINEER

July 19, 2013
PLANS APPROVAL DATE

REGISTERED PROFESSIONAL ENGINEER Michael Janzen No. 44788 Exp. 03-31-14 CIVIL STATE OF CALIFORNIA

THE STATE OF CALIFORNIA OR ITS OFFICERS OR AGENTS SHALL NOT BE RESPONSIBLE FOR THE ACCURACY OR COMPLETENESS OF SCANNED COPIES OF THIS PLAN SHEET.

TO ACCOMPANY PLANS DATED 06-15-16

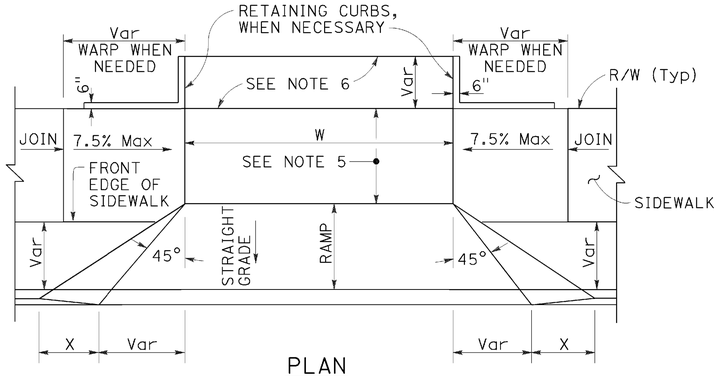

PLAN

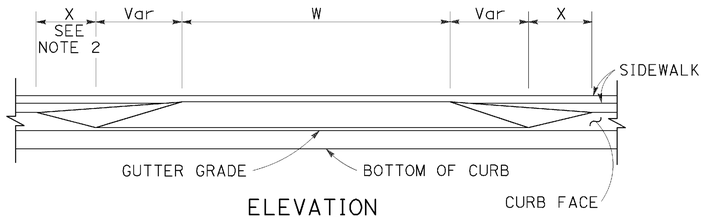

ELEVATION

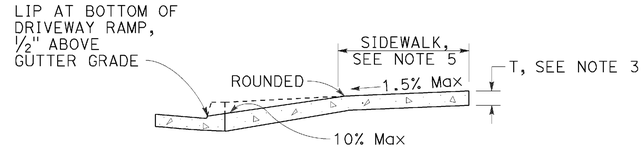

CASE A

Typical driveway, sidewalk not depressed

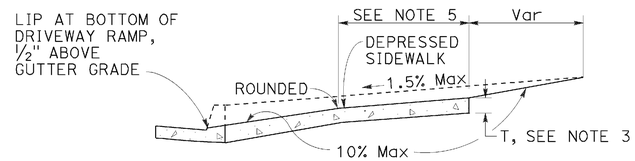

CASE B

Driveway with depressed sidewalk

SECTIONS

TABLE A

CURB TYPE	DIMENSIONS			
	"H1"	"H2"	"W1"	"W2"
A1-6	1'-2"	6"	7½"	1½"
A1-8	1'-4"	8"	8"	2"
A2-6	1'-0"	6"	2'-7½"	1½"
A2-8	1'-2"	8"	2'-8"	2"
A3-6	6"	5"	7¼"	1¼"
A3-8	8"	7"	7¾"	1¾"
B1-4	1'-0"	4"	7½"	2½"
B1-6	1'-2"	6"	9"	4"
B2-4	10"	4"	2'-7½"	2½"
B2-6	1'-0"	6"	2'-9"	4"
B3-4	4"	3"	7"	2"
B3-6	6"	5"	8½"	3½"
D-4	10"	4"	1'-6"	1'-1"
D-6	1'-0"	6"	2'-2"	1'-9"

CURB QUANTITIES

TYPE	CUBIC YARDS PER LINEAR FOOT
A1-6	0.02585
A1-8	0.03084
A2-6	0.05903
A2-8	0.06379
A3-6	0.01036
A3-8	0.01435
B1-4	0.02185
B1-6	0.02930
B2-4	0.05515
B2-6	0.06171
B3-4	0.00641
B3-6	0.01074
B4	0.05709
D-4	0.04083
D-6	0.06804
E	0.06661

DRIVEWAYS

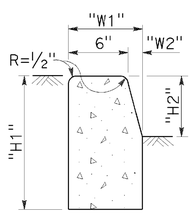

TYPE A1 CURBS

See Table A

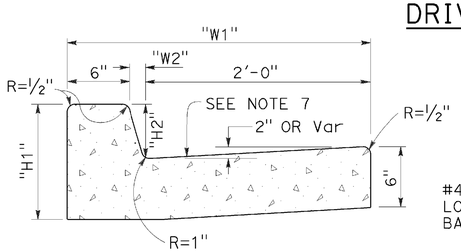

TYPE A2 CURBS

See Table A

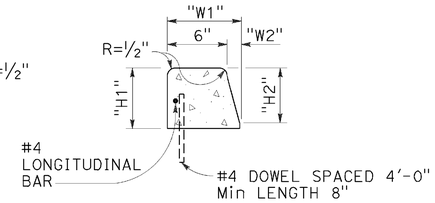

TYPE A3 CURBS

Superimposed on existing pavement
See Table A

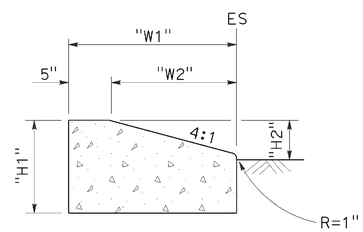

TYPE D CURBS

See Table A

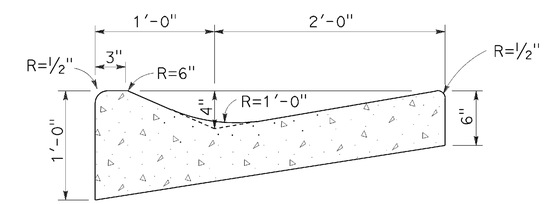

TYPE E CURB

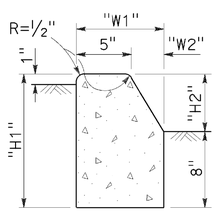

TYPE B1 CURBS

See Table A

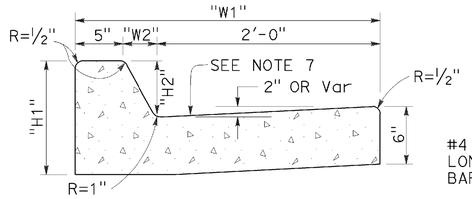

TYPE B2 CURBS

See Table A

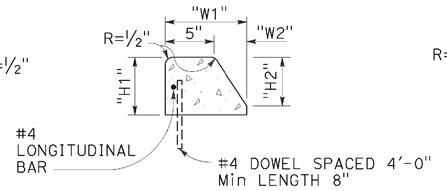

TYPE B3 CURBS

Superimposed on existing pavement
See Table A

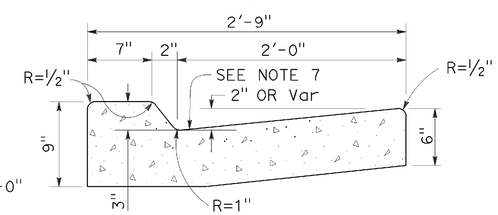

TYPE B4 CURBS

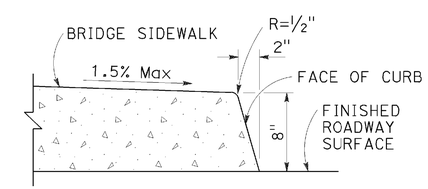

TYPE H CURB

On Bridges

CURBS

NOTES:

1. Case A driveway section typically applies.
2. X=3'-0" except for curb heights over 10" where 4:1 slopes shall be used on curb slope.
3. Sidewalk and ramp thickness "T" at driveway shall be 4" for residental and 6" for commercial.
4. Difference in slope of the driveway ramp and the slope of a line between the gutter and a point on the roadway 5'-0" from gutter line shall not exceed 15%. Reduce driveway ramp slope, not gutter slope, where required.
5. Minimum width of clear passageway for sidewalk shall be 4'-2".
6. Retaining curbs and acquisition of construction easement may be necessary for narrow sidewalks or curb heights in excess of 6".
7. Across the pedestrian route at curb ramp locations, the gutter pan slope shall not exceed 1" of depth for each 2'-0" of width.

STATE OF CALIFORNIA
DEPARTMENT OF TRANSPORTATION

CURBS AND DRIVEWAYS

NO SCALE

RSP A87A DATED JULY 19, 2013 SUPERSEDES STANDARD PLAN A87A
DATED MAY 20, 2011 - PAGE 119 OF THE STANDARD PLANS BOOK DATED 2010.

REVISED STANDARD PLAN RSP A87A

2010 REVISED STANDARD PLAN RSP A87A

DATE PLOTTED => 28-JUL-2016
TIME PLOTTED => 14:08

Dist	COUNTY	ROUTE	POST MILES TOTAL PROJECT	SHEET No.	TOTAL SHEETS
02	Las, Sie,Las	70, 395	3.5/3.9 R0.0/R3.1,R0.0/R5.6	173	236

REGISTERED CIVIL ENGINEER

January 15, 2016
PLANS APPROVAL DATE

REGISTERED PROFESSIONAL ENGINEER
Michael Janzen
No. 44788
Exp. 3-31-16
CIVIL
STATE OF CALIFORNIA

THE STATE OF CALIFORNIA OR ITS OFFICERS OR AGENTS SHALL NOT BE RESPONSIBLE FOR THE ACCURACY OR COMPLETENESS OF SCANNED COPIES OF THIS PLAN SHEET.

TO ACCOMPANY PLANS DATED 06-15-16

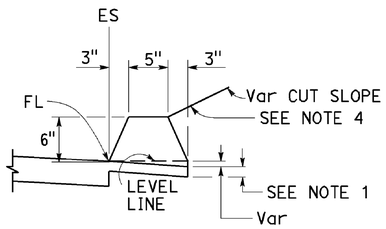

TYPE A
See Notes 3 and 5

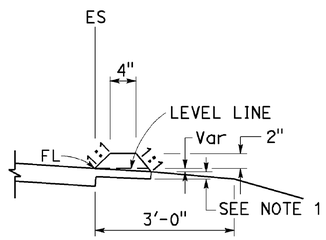

TYPE C

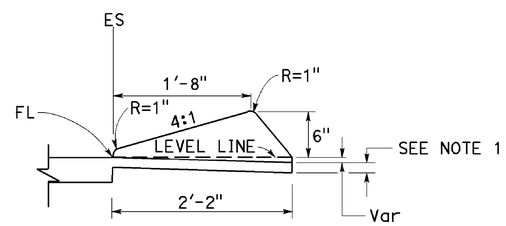

TYPE D

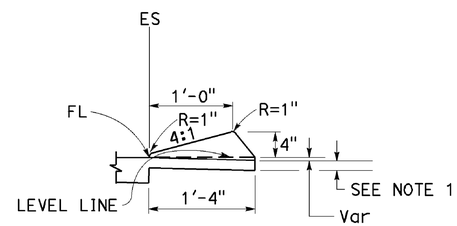

TYPE E

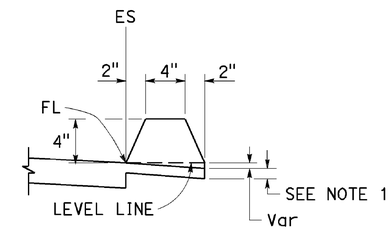

TYPE F
See Note 5

DIKES

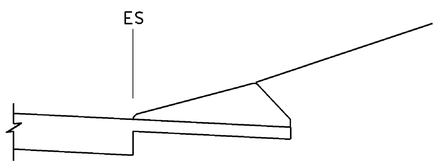

CASE C-1
Cut Slope

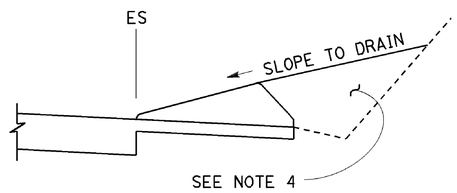

CASE C-2
Cut Slope

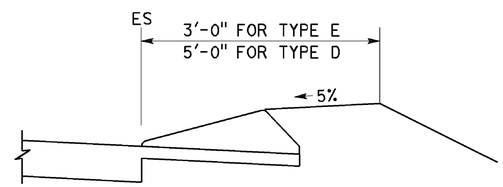

CASE F

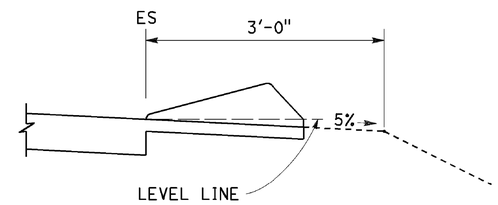

CASE R
See Note 2

TYPE D AND E BACKFILL DETAILS

NOTES:

1. For HMA shoulders only, extend top layer of HMA placed on the shoulder under dike with no joint at the ES. For projects with OGFC shoulders, do not extend OGFC under dike. See project plans for modified dike detail.
2. Case R applies to retrofit only projects where restrictive conditions do not provide enough width for Case F backfill.
3. Type A dike only to be used where restrictive slope conditions do not provide enough width to use Type D or Type E dike.
4. Fill and compact with excavated material to top of dike.
5. Use Type A or F dike, where dike is required with guardrail installations. See Revised Standard Plan RSP A77N4 for dike positioning details. See Revised Standard Plan RSP A77N3 for hinge point offsets with guardrail.

DIKE QUANTITIES

TYPE	CUBIC YARDS PER LINEAR FOOT
A	0.0135
C	0.0038
D	0.0293
E	0.0130
F	0.0066

Quantities based on 5% cross slope.

STATE OF CALIFORNIA
DEPARTMENT OF TRANSPORTATION

HOT MIX ASPHALT DIKES

NO SCALE

RSP A87B DATED JANUARY 15, 2016 SUPERSEDES RSP A87B DATED JULY 19, 2013 AND STANDARD PLAN A87B DATED MAY 20, 2011 - PAGE 120 OF THE STANDARD PLANS BOOK DATED 2010.

REVISED STANDARD PLAN RSP A87B

2010 REVISED STANDARD PLAN RSP A87B

DATE PLOTTED => 28-JUL-2016
TIME PLOTTED => 14:09

Dist	COUNTY	ROUTE	POST MILES TOTAL PROJECT	SHEET No.	TOTAL SHEETS
02	Las, Sie,Las	70, 395	3.5/3.9 R0.0/R3.1,R0.0/R5.6	174	236

Srikanth Balasubramanian
REGISTERED CIVIL ENGINEER

October 30, 2015
PLANS APPROVAL DATE

REGISTERED PROFESSIONAL ENGINEER Srikanth N. Balasubramanian No. C56426 Exp. 6-30-17 CIVIL STATE OF CALIFORNIA

THE STATE OF CALIFORNIA OR ITS OFFICERS OR AGENTS SHALL NOT BE RESPONSIBLE FOR THE ACCURACY OR COMPLETENESS OF SCANNED COPIES OF THIS PLAN SHEET.

TO ACCOMPANY PLANS DATED 06-15-16

ABBREVIATIONS:

TE TAPERED EDGE

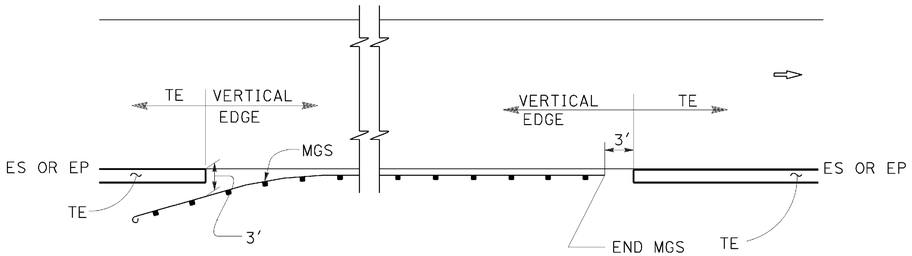

MGS

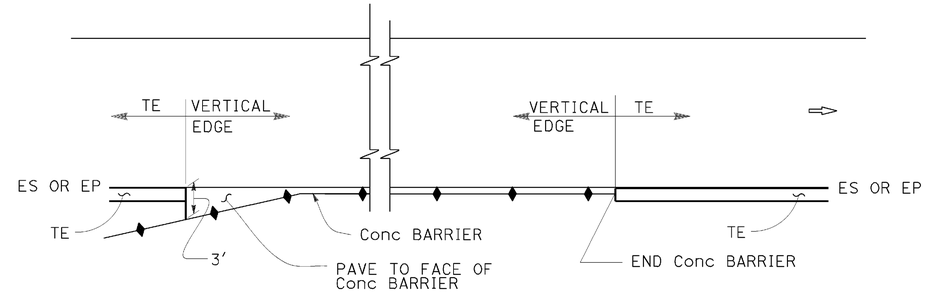

CONCRETE BARRIER

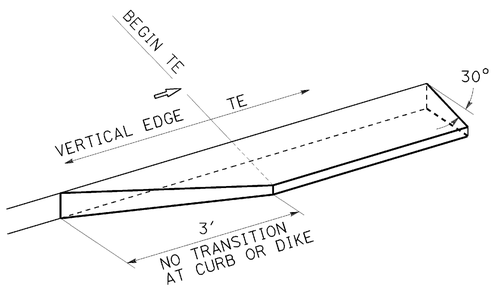

TRANSITION DETAIL FOR CONCRETE ONLY

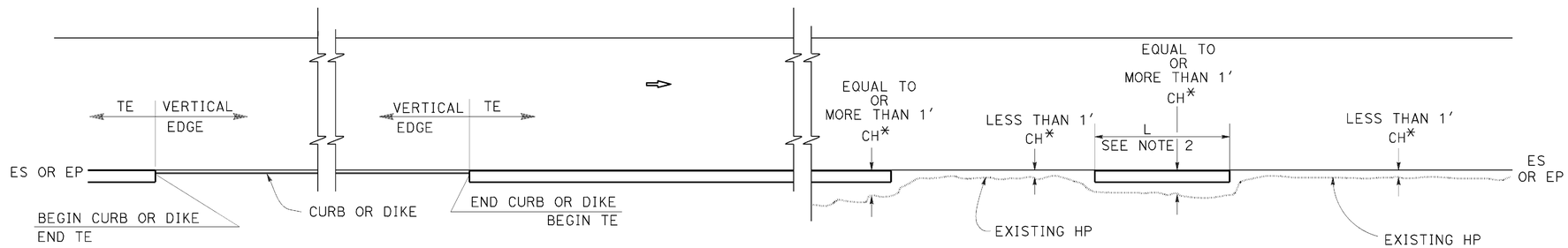

CURB OR DIKE

NARROW SIDE SLOPE

* CH = Distance from ES or EP to existing HP.

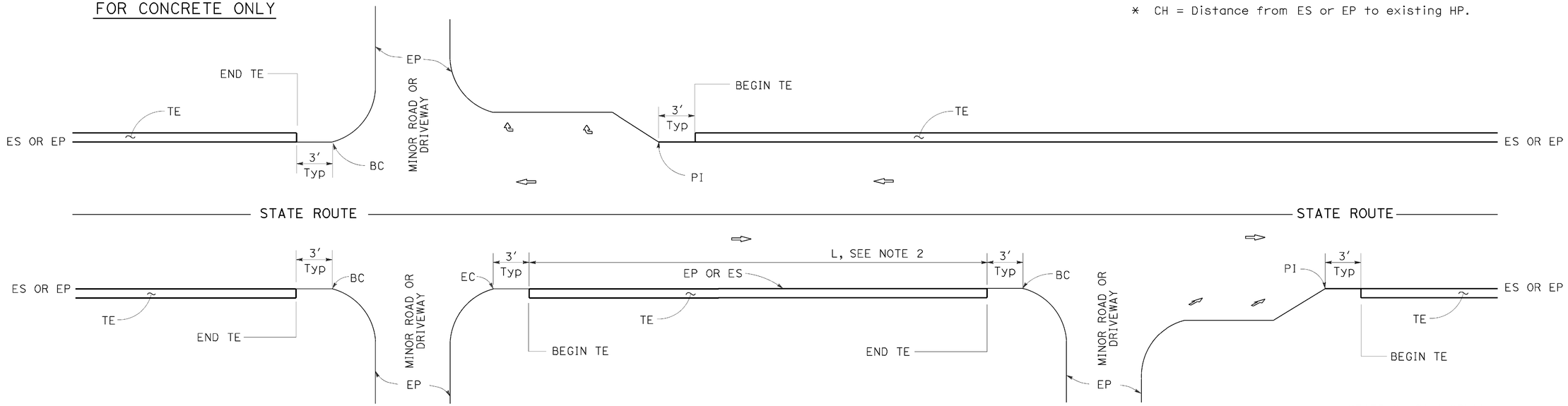

INTERTECTION

DRIVEWAY AND INTERSECTION

MINOR ROADWAY OR DRIVEWAY

STATE OF CALIFORNIA
DEPARTMENT OF TRANSPORTATION

PAVEMENT EDGE TREATMENTS

NO SCALE

NOTES:

1. For details not shown, see Revised Standard Plans RSP P75 and RSP P76.
2. Tapered edge is optional when L is less than 30′.

RSP P74 DATED OCTOBER 30, 2015 SUPERSEDES RSP P74 DATED NOVEMBER 15, 2013 AND RSP P74 DATED JANUARY 20, 2012 THAT SUPPLEMENTS THE STANDARD PLANS BOOK DATED 2010.

REVISED STANDARD PLAN RSP P74

2010 REVISED STANDARD PLAN RSP P74

DATE PLOTTED => 28-JUL-2016
TIME PLOTTED => 14:09

Dist	COUNTY	ROUTE	POST MILES TOTAL PROJECT	SHEET No.	TOTAL SHEETS
02	Las, Sie,Las	70, 395	3.5/3.9 R0.0/R3.1,R0.0/R5.6	175	236

Srikanth Balasubramanian
REGISTERED CIVIL ENGINEER

October 30, 2015
PLANS APPROVAL DATE

REGISTERED PROFESSIONAL ENGINEER Srikanth N. Balasubramanian No. C56426 Exp. 6-30-17 CIVIL STATE OF CALIFORNIA

THE STATE OF CALIFORNIA OR ITS OFFICERS OR AGENTS SHALL NOT BE RESPONSIBLE FOR THE ACCURACY OR COMPLETENESS OF SCANNED COPIES OF THIS PLAN SHEET.

TO ACCOMPANY PLANS DATED 06-15-16

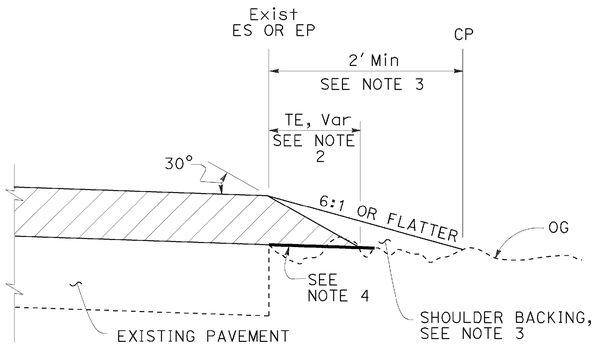

CASE A
Tapered Edge

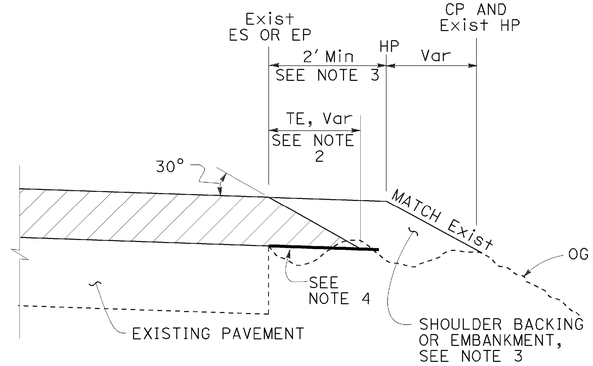

CASE B
Tapered Edge

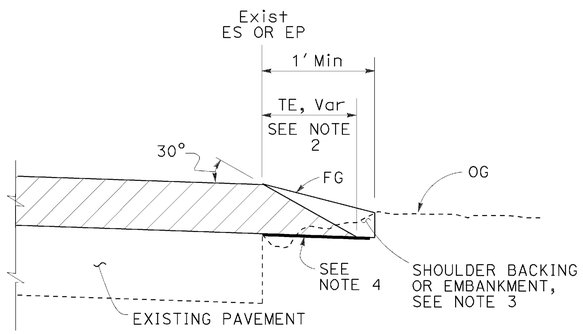

CASE C
Tapered Edge

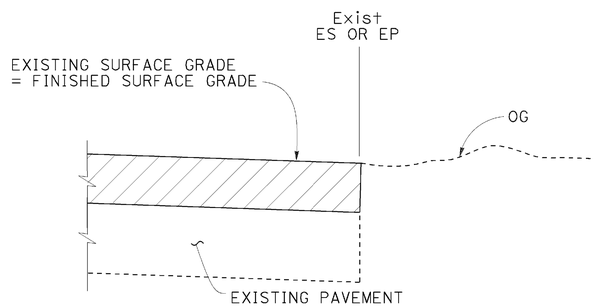

CASE D
Vertical Edge

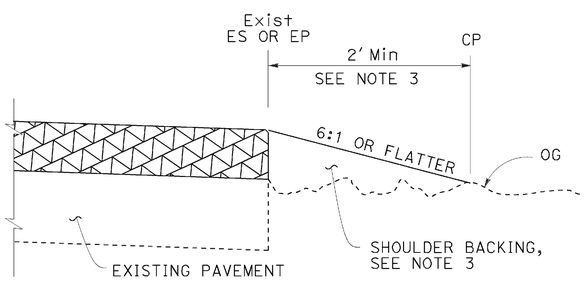

CASE E
Vertical Edge

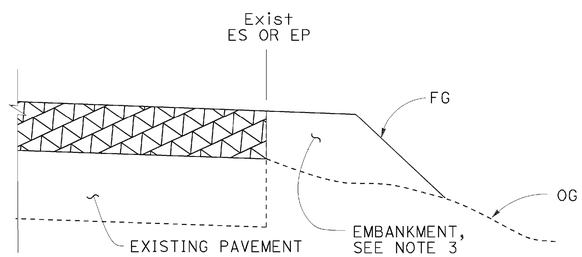

CASE F
Vertical Edge
* See Table A and Revised Std Plan RSP P74

LEGEND:

- HMA OVERLAY
- HMA OR CONCRETE OVERLAY
- CONCRETE OVERLAY

ABBREVIATIONS:

TE TAPERED EDGE
TT TOTAL THICKNESS OF TE

TABLE A
EDGE TREATMENT FOR VARIOUS OVERLAY THICKNESS AND CONDITIONS

	OVERLAY THICKNESS	
FIELD CONDITION	LESS THAN 0.15'	0.15' OR MORE
Exist SLOPE 6:1 OR FLATTER	CASE E	CASE A
Exist SLOPE 3:1 TO 6:1	CASE E	CASE B
Exist SLOPE STEEPER THAN 3:1	CASE F	CASE F
CUT SECTION (REPLACE, COLD PLANE, MILL PAVEMENT)	CASE D	CASE C

ADDITIONAL HMA OR CONCRETE QUANTITIES FOR TE/SIDE/MILE

TYPICAL CROSS SECTION	TT	TOTAL ADDITIONAL MATERIAL FOR TE/SIDE/MILE		
		HMA (TON)	CONCRETE (CY)*	CONCRETE (CY)**
TT	0.15'	7.7	NA	NA
	0.20'	13.7	NA	NA
	0.30'	30.9	NA	NA
	0.40'	54.9	NA	NA
	0.45'	69.4	NA	NA
TT 0.43'	0.50'	84.2	NA	NA
	0.60'	113.9	NA	NA
	0.70'	143.6	70.9	94.2
	0.80'	173.3	85.6	112.2
	0.90'	203.0	100.3	130.2
	1.00'	232.7	114.9	148.2
	1.10'	262.4	129.6	166.2
	1.20'	292.1	144.3	184.2

* For Detail "A"
** For Optional Detail "A"

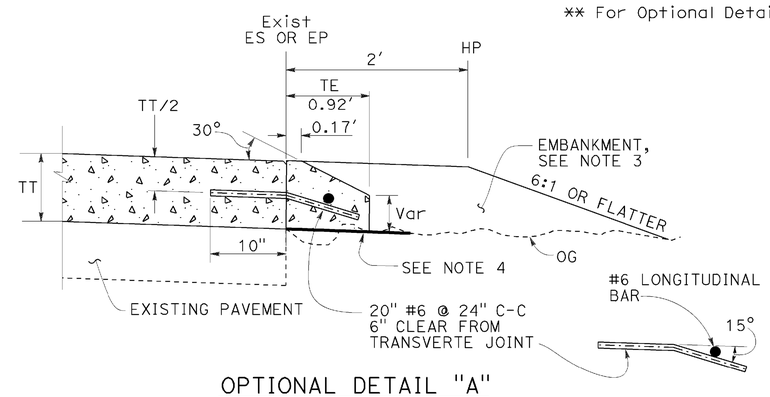

OPTIONAL DETAIL "A"
For concrete overlay
See Note 5

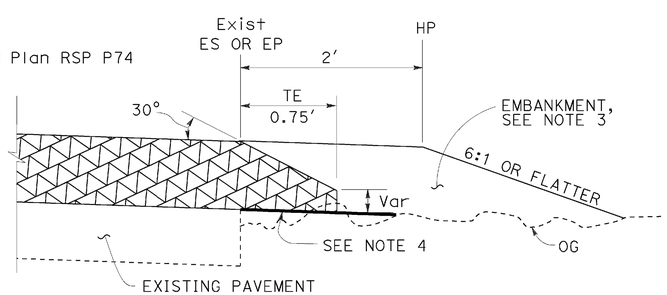

DETAIL "A"
For HMA overlay thickness more than 0.43' or concrete overlay

NOTES:

1. For limits of tapered edge and vertical edge treatments, see Revised Standard Plan RSP P74.
2. Details shown for HMA overlay thickness less than 0.43'. See Detail "A" for HMA overlay thickness more than 0.43' or concrete overlay.
3. For locations and limits of shoulder backing or embankment see project plans.
4. Grade existing ground to place tapered edge. 1' minimum width
5. Tapered edge transverse joint must match overlay transverse joint. End of #6 longitudinal bar must be 2" ±½" clear from transverse joint.
6. Tapered edge is not needed in the area of MGS, barrier, right turn lane and acceleration lane. See Revised Standard Plan RSP P74.

STATE OF CALIFORNIA
DEPARTMENT OF TRANSPORTATION

PAVEMENT EDGE TREATMENTS-OVERLAYS

NO SCALE

RSP P75 DATED OCTOBER 30, 2015 SUPERSEDES RSP P75 DATED NOVEMBER 15, 2013 AND RSP P75 DATED JANUARY 20, 2012 THAT SUPPLEMENTS THE STANDARD PLANS BOOK DATED 2010.

REVISED STANDARD PLAN RSP P75

2010 REVISED STANDARD PLAN RSP P75

DATE PLOTTED => 28-JUL-2016
TIME PLOTTED => 14:10

Dist	COUNTY	ROUTE	POST MILES TOTAL PROJECT	SHEET No.	TOTAL SHEETS
02	Las, Sie,Las	70, 395	3.5/3.9 R0.0/R3.1,R0.0/R5.6	176	236

Srikanth Balasubramanian
REGISTERED CIVIL ENGINEER

October 30, 2015
PLANS APPROVAL DATE

REGISTERED PROFESSIONAL ENGINEER Srikanth N. Balasubramanian No. C56426 Exp. 6-30-17 CIVIL STATE OF CALIFORNIA

THE STATE OF CALIFORNIA OR ITS OFFICERS OR AGENTS SHALL NOT BE RESPONSIBLE FOR THE ACCURACY OR COMPLETENESS OF SCANNED COPIES OF THIS PLAN SHEET.

TO ACCOMPANY PLANS DATED 06-15-16

LEGEND:

- HMA PAVEMENT
- HMA OR CONCRETE PAVEMENT
- CONCRETE PAVEMENT

ABBREVIATIONS:

TE TAPERED EDGE

TT TOTAL THICKNESS OF TE

HW HINGE WIDTH, DISTANCE FROM ES OR EP TO HP

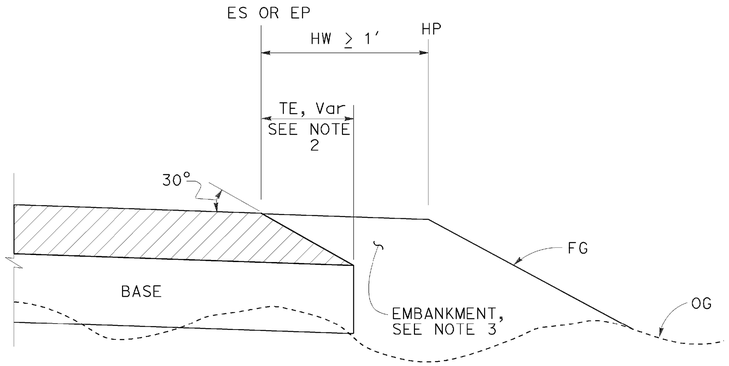

CASE K
Tapered Edge - Fill Section, HW ≥ 1′

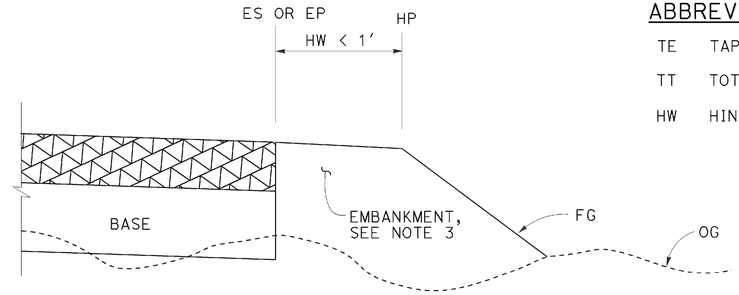

CASE L
Vertical Edge - Fill Section, HW < 1′

FILL SECTION

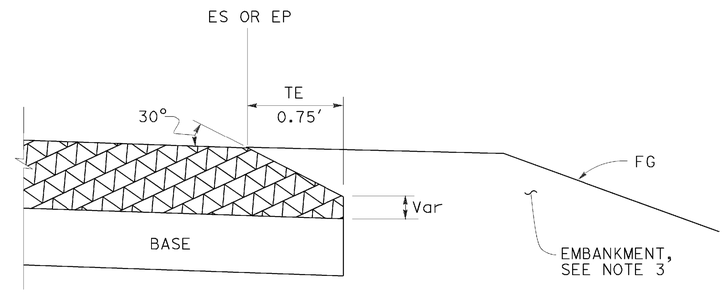

DETAIL "B"
For HMA pavement thickness more than 0.43′ or concrete pavement

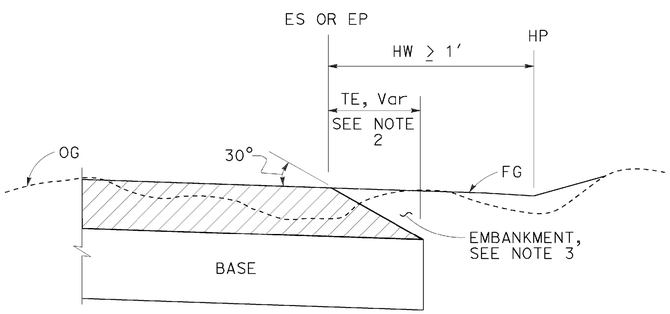

CASE M
Tapered Edge - Cut Section, HW ≥ 1′

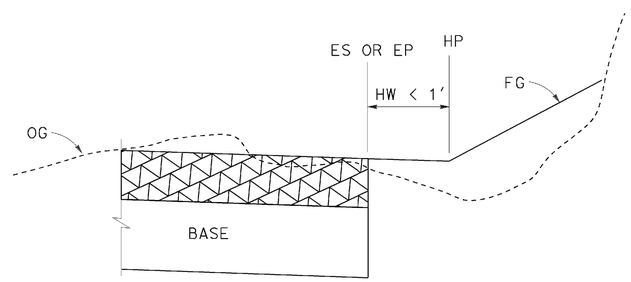

CASE N
Vertical Edge - Cut Section, HW < 1′

CUT SECTION

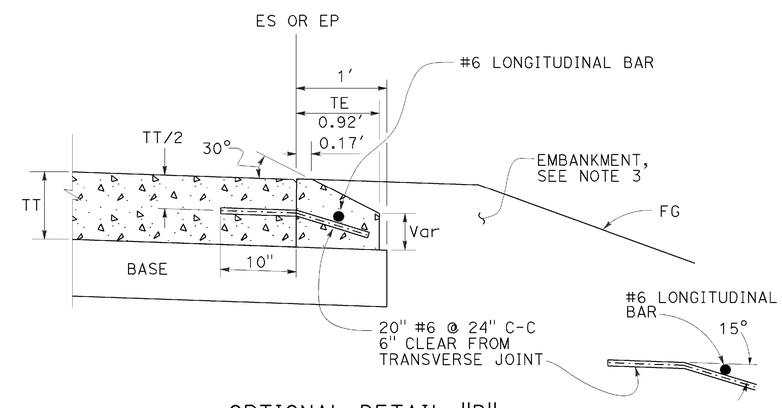

OPTIONAL DETAIL "B"
For concrete pavement
See Note 4

NOTES:

1. For limits of tapered edge and vertical edge treatments, see Revised Standard Plan RSP P74
2. Details shown for HMA pavement thickness less than 0.43′. See Detail "B" for HMA pavement thickness more than 0.43′ or concrete pavement.
3. For locations and limits of embankment see project plans.
4. Tapered edge transverse joint must match pavement transverse joint. End of #6 longitudinal bar must be 2" ±½" clear from transverse joint.
5. Tapered edge is not needed in the area of MGS, barrier, right turn lane and acceleration lane. See Revised Standard Plan RSP P74.

STATE OF CALIFORNIA
DEPARTMENT OF TRANSPORTATION

PAVEMENT EDGE TREATMENTS-NEW CONSTRUCTION

NO SCALE

RSP P76 DATED OCTOBER 30, 2015 SUPERSEDES RSP P76 DATED NOVEMBER 15, 2013 AND RSP P76 DATED JANUARY 20, 2012 THAT SUPPLEMENTS THE STANDARD PLANS BOOK DATED 2010.

REVISED STANDARD PLAN RSP P76

2010 REVISED STANDARD PLAN RSP P76

DATE PLOTTED => 28-JUL-2016
TIME PLOTTED => 14:10

Dist	COUNTY	ROUTE	POST MILES TOTAL PROJECT	SHEET No.	TOTAL SHEETS
02	Las, Sie,Las	70, 395	3.5/3.9 R0.0/R3.1,R0.0/R5.6	177	236

REGISTERED CIVIL ENGINEER

July 15, 2016
PLANS APPROVAL DATE

REGISTERED PROFESSIONAL ENGINEER Carl M. Duan No. C59976 Exp. 6-30-18 CIVIL STATE OF CALIFORNIA

THE STATE OF CALIFORNIA OR ITS OFFICERS OR AGENTS SHALL NOT BE RESPONSIBLE FOR THE ACCURACY OR COMPLETENESS OF SCANNED COPIES OF THIS PLAN SHEET.

TO ACCOMPANY PLANS DATED 06-15-16

NOTE:

1. For notes and Table 2, See Revised Standard Plan RSP D72C.

TABLE 1		
	T_1	Vert BARS
L_1 AND L_2 < 2'-10"	9"	#4 @ 12
L_1 OR L_2 > 2'-10"	12"	#5 @ 12

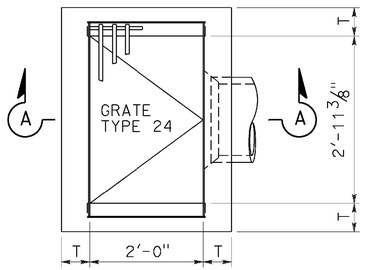

PLAN
TYPE G1

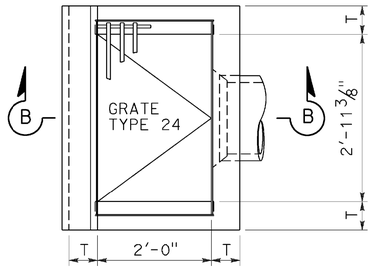

PLAN
TYPE G3

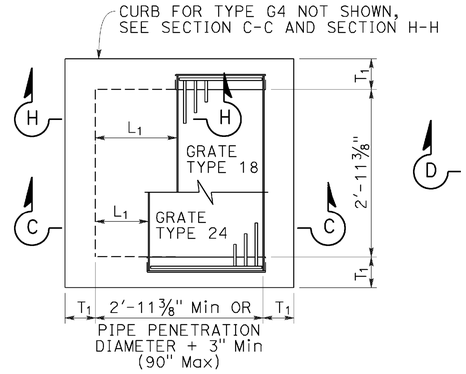

PLAN
STANDARD
TYPE G2 OR G4

FOR "L_1", "L_2" AND "T_1" VALUES, SEE "TABLE 1"

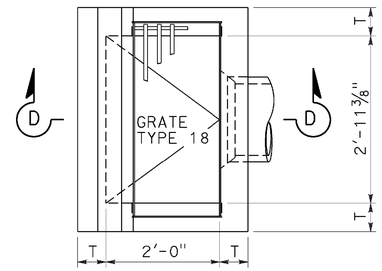

PLAN
TYPE G5

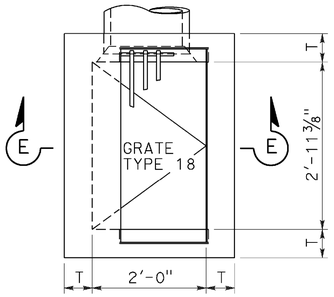

PLAN
TYPE G6

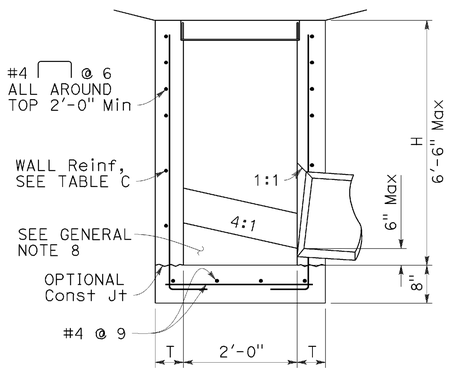

SECTION A-A

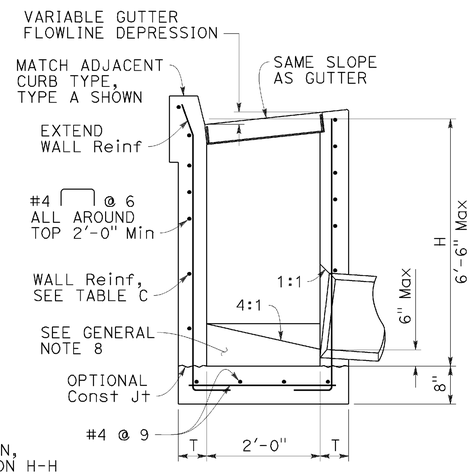

SECTION B-B

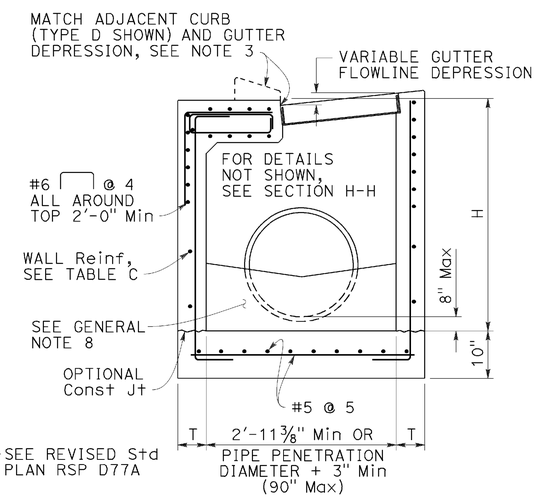

SECTION C-C

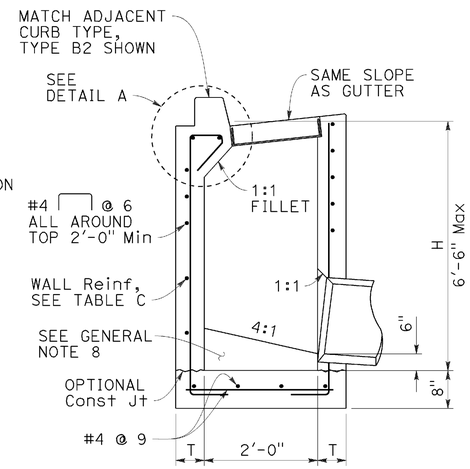

SECTION D-D

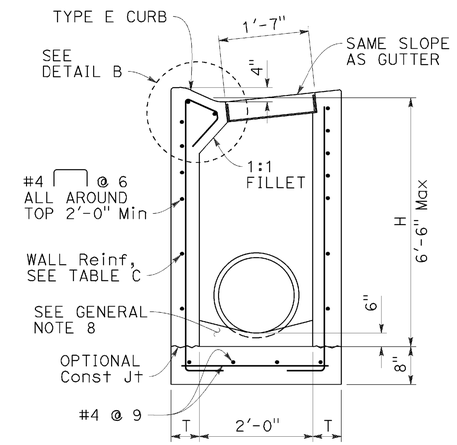

SECTION E-E

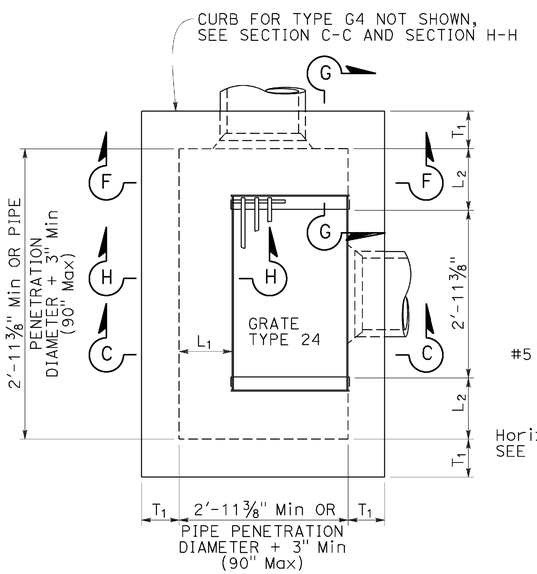

PLAN
EXPANDED
TYPE G2 OR G4

(INTEGRAL TOP ALTERNATIVE)
FOR "L" AND "T" VALUES, SEE TABLE 1

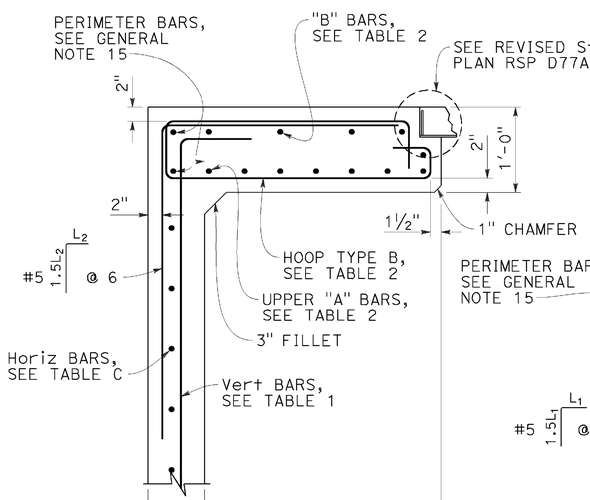

SECTION G-G

FOR "L_1", "L_2" AND "T_1" VALUES, SEE "TABLE 1"

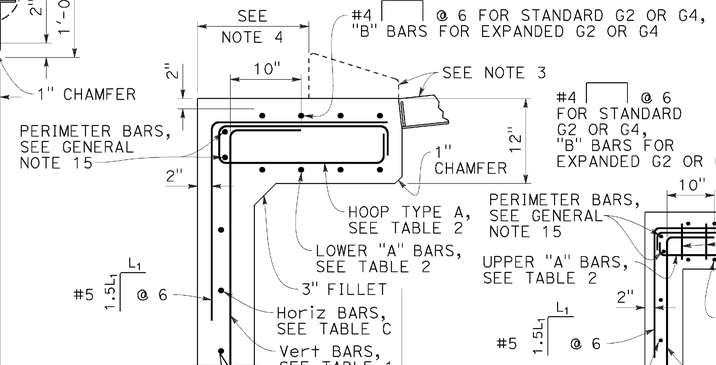

SECTION H-H

FOR "L_1", "L_2" AND "T_1" VALUES, SEE "TABLE 1"

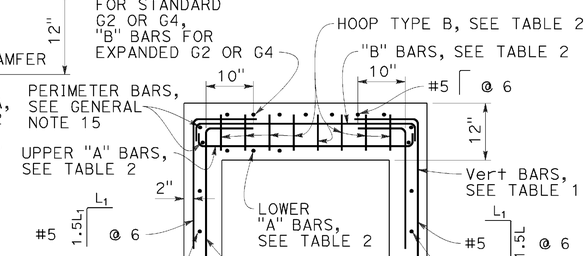

SECTION F-F

FOR "L_1", "L_2" AND "T_1" VALUES, SEE "TABLE 1"

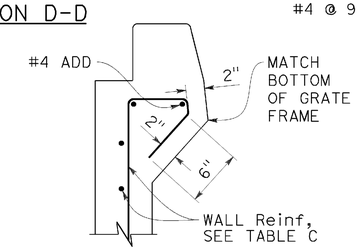

DETAIL A

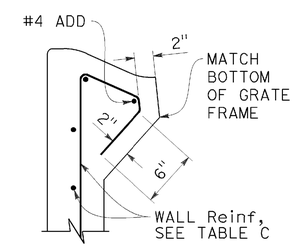

DETAIL B

STATE OF CALIFORNIA
DEPARTMENT OF TRANSPORTATION

CIP DRAINAGE INLETS TYPES G1, G2, G3, G4, G5 AND G6

NO SCALE

RSP D72A DATED JULY 15, 2016 SUPPLEMENTS THE STANDARD PLANS BOOK DATED 2010.

REVISED STANDARD PLAN RSP D72B

2010 REVISED STANDARD PLAN RSP D72B

DATE PLOTTED => 28-JUL-2016
TIME PLOTTED => 14:10

Dist	COUNTY	ROUTE	POST MILES TOTAL PROJECT	SHEET No.	TOTAL SHEETS
02	Las, Sie,Las	70, 395	3.5/3.9 R0.0/R3.1,R0.0/R5.6	178	236

REGISTERED CIVIL ENGINEER

July 15, 2016
PLANS APPROVAL DATE

REGISTERED PROFESSIONAL ENGINEER
Carl M. Duan
No. C59976
Exp. 6-30-18
CIVIL
STATE OF CALIFORNIA

THE STATE OF CALIFORNIA OR ITS OFFICERS OR AGENTS SHALL NOT BE RESPONSIBLE FOR THE ACCURACY OR COMPLETENESS OF SCANNED COPIES OF THIS PLAN SHEET.

TO ACCOMPANY PLANS DATED 06-15-16

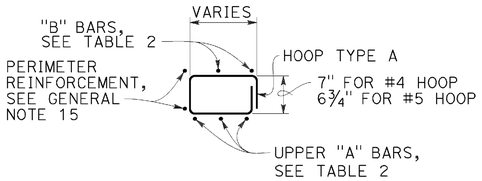

HOOP TYPE A

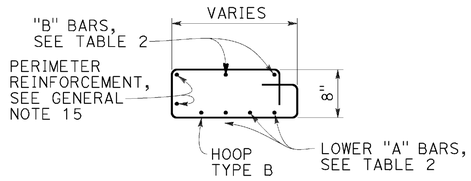

HOOP TYPE B

NOTES:

1. See Revised Standard Plan RSP D72F for General Notes and additional details. See Revised Standard Plan RSP D72G for tables and quantities.
2. Type G4 inlet can use Grate Type 18 or 24. Type G2 inlet uses Grate Type 24.
3. Type G4 inlet details are similar to Type G2 inlet details, except for the addition of a curb and sloped grate to match the adjacent curb and gutter depression.
4. Dimension will vary with different grates, curb types, box width and wall thickness.

TABLE 2 - TOP SLAB REINFORCEMENT

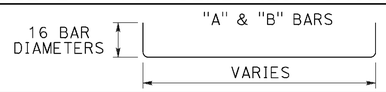

	W/ CURB	W/O CURB
"A" BARS	#4 @ 5 (2 BARS Min)	#5 @ 5 (3 BARS Min)
"B" BARS	#4 @ 10 (2 BARS Min)	#4 @ 12 (2 BARS Min)
HOOPS ("A" & "B")	#4 @ 5	#5 @ 5

ROTATE "A" AND "B" BARS SO HOOKED ENDS WILL MAINTAIN 2" CLEAR COVERAGE.

STATE OF CALIFORNIA
DEPARTMENT OF TRANSPORTATION

CIP DRAINAGE INLETS TYPES G1, G2, G3, G4, G5 AND G6

NO SCALE

RSP D72C DATED JULY 15, 2016 SUPPLEMENTS THE STANDARD PLANS BOOK DATED 2010.

REVISED STANDARD PLAN RSP D72C

2010 REVISED STANDARD PLAN RSP D72C

DATE PLOTTED => 28-JUL-2016
TIME PLOTTED => 14:11

Dist	COUNTY	ROUTE	POST MILES TOTAL PROJECT	SHEET No.	TOTAL SHEETS
02	Las, Sie,Las	70, 395	3.5/3.9 R0.0/R3.1,R0.0/R5.6	179	236

REGISTERED CIVIL ENGINEER

July 15, 2016
PLANS APPROVAL DATE

REGISTERED PROFESSIONAL ENGINEER Carl M. Duan No. C59976 Exp. 6-30-18 CIVIL STATE OF CALIFORNIA

THE STATE OF CALIFORNIA OR ITS OFFICERS OR AGENTS SHALL NOT BE RESPONSIBLE FOR THE ACCURACY OR COMPLETENESS OF SCANNED COPIES OF THIS PLAN SHEET.

TO ACCOMPANY PLANS DATED 06-15-16

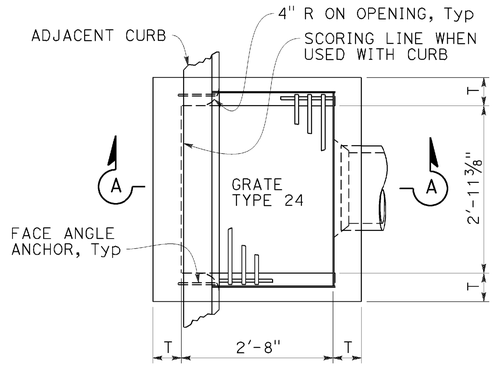

PLAN
TYPE GO

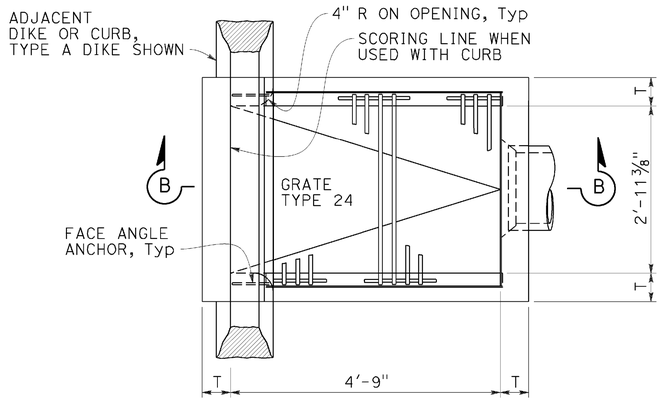

PLAN
TYPE GDO

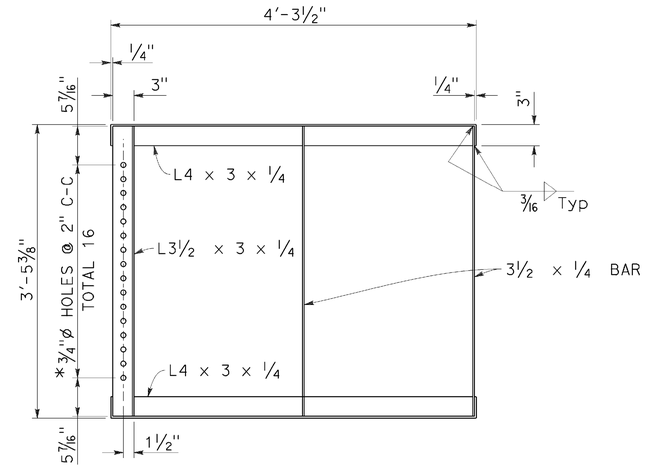

GRATE FRAME FOR TYPE GDO INLET
* HOLES REQUIRED ONLY WITH TRASH RACK

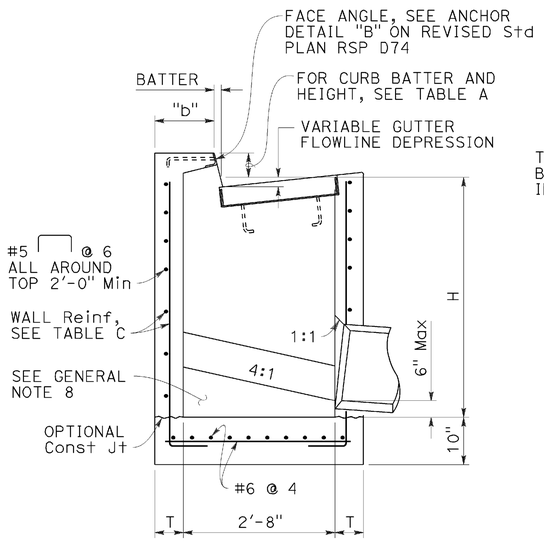

SECTION A-A

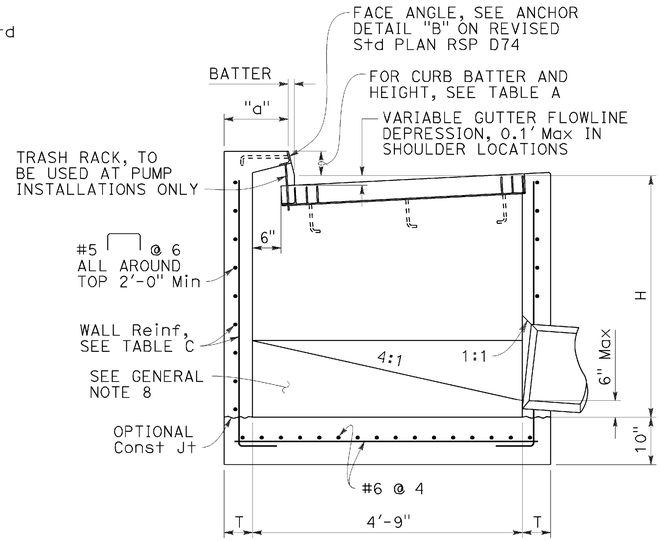

SECTION B-B

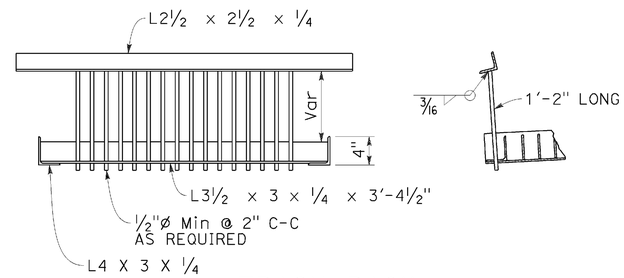

TRASH RACK
(FOR USE WITH PUMP INSTALLATION)

TABLE A				
CURB TYPE	NORMAL CURB HEIGHT	CURB BATTER	"a" DIMENSION	"b" DIMENSION
A1-6	6"	1½"	T+7½"	T+6½"
A1-8	8"	2"	T+7"	T+6"
B1-6	6"	4"	T+5"	T+4"
TYPE A DIKE	6"	3"	T+6"	T+5"

Height of curb opening will vary with the type of curb and the depth of the local depression.

NOTES:

1. See Revised Standard Plan RSP D72F for General Notes and additional details. See Revised Standard Plan RSP D72G for tables, wall thickness "T" and quantities.
2. Where shown on the project plans, place a ¾"ø plain round protection bar horizontally across the length of the opening and bend back 4" into the inlet wall on each side.
3. Complete joint penetration butt welds may be substituted for the fillet welds on all anchors.
4. Standard square, hexagon, round or equivalent headed anchors may be substituted for the right angle hooks on the anchors shown on this plan.

STATE OF CALIFORNIA
DEPARTMENT OF TRANSPORTATION

CIP DRAINAGE INLETS TYPES GO AND GDO

NO SCALE

RSP D72E DATED JULY 15, 2016 SUPPLEMENTS THE STANDARD PLANS BOOK DATED 2010.

REVISED STANDARD PLAN RSP D72E

2010 REVISED STANDARD PLAN RSP D72E

DATE PLOTTED => 28-JUL-2016
TIME PLOTTED => 14:12

Dist	COUNTY	ROUTE	POST MILES TOTAL PROJECT	SHEET No.	TOTAL SHEETS
02	Las, Sie,Las	70, 395	3.5/3.9 R0.0/R3.1,R0.0/R5.6	180	236

REGISTERED CIVIL ENGINEER

July 15, 2016
PLANS APPROVAL DATE

REGISTERED PROFESSIONAL ENGINEER Carl M. Duan No. C59976 Exp. 6-30-18 CIVIL STATE OF CALIFORNIA

THE STATE OF CALIFORNIA OR ITS OFFICERS OR AGENTS SHALL NOT BE RESPONSIBLE FOR THE ACCURACY OR COMPLETENESS OF SCANNED COPIES OF THIS PLAN SHEET.

TO ACCOMPANY PLANS DATED 06-15-16

GENERAL NOTES:

1. "H" is measured from top of bottom slab to the normal gutter grade line undepressed at the curb face.
2. For "T" wall thickness and reinforcement, see Table C on Revised Standard Plan RSP D72G.
3. Wall reinforcement must be placed in the center of the wall thickness with horizontal bars placed on the exterior face. Bottom slab concrete cover must be 3" clear on the interior face unless otherwise noted. Top slab concrete cover must be 2" clear on the exterior face unless otherwise noted. Reinforcement spacing is in inches unless otherwise noted.
4. Steps - None required where "H" is less than 2'-6". Where "H" is 2'-6" or more, install steps with lowest rung 1'-0" above the floor and highest rung not more than 6" below bottom of lid. The distance between steps must not exceed 1'-0" and be uniform throughout the length of the wall. Place steps in the wall without an opening. Steps inserts may be substituted for the bar steps. Step inserts must comply with State Industrial Safety Requirements. See Revised Standard Plan RSP D74 for step details.
5. Pipe(s) can be placed in any wall. Adjacent to each side of the opening, place additional reinforcement equivalent to half the interupted main reinforcement. For larger pipes greater than or equal to 42" diameter, also add 4 diagonal bars, 1 bar each side. Bars must be the same size as the larger of the main vertical or horizontal bars. Extend bars one development length past the intersection with the adjacent diagonal bar, or where bars intersect mid thickness of adjacent wall bottom or top of non-continuous wall, bend ends as required into same plane.
6. Set inlet so that grate bars are parallel to direction of principal surface flow.
7. Curb section must match adjacent curb.
8. Except for inlets used as junction boxes, basin floors must have wood trowel finish and a minimum slope of 4:1, unless otherwise noted, from all directions toward outlet pipe by casting grout fill on top of the bottom slab. The additional volume to achieve the 4:1 slope may also be achieved by casting the bottom slab and fill as a composite concrete element.
9. See Revised Standard Plans RSP D77A and RSP D77B for grate and frame details and weights of miscellaneous iron and steel.
10. See Standard Plans D78A and D78B for gutter depression details.
11. See Revised Standard Plans RSP A87A and RSP A87B for curb and dike details.
12. Details shown apply to metal, concrete and plastic pipe(s).
13. The Contractor may use WWR instead of bar reinforcement. The ratio of bar reinforcement to WWR shall be based on the yield strength ratio.
14. Cast-in-place (CIP) inlets to be formed around all pipes/stubs intersecting the inlet, and concrete poured in one continuous operation.
15. Perimeter reinforcement must not be smaller than main bars and #4 and serves as a rigid frame to position and attach the required structural reinforcement and may be tack welded at outer corners when using ASTM A706 weldable bars.

DESIGN NOTES:

1. Design Specifications: AASHTO LRFD Bridge Design Specifications, 6th edition with 2012 Interims and Errata and CA Amendments.
2. Live Load (AASHTO LRFD 3.6.1.2):
   HL-93, consists of design truck or tandem, and design lane load.
   Dynamic Load Allowance, IM = 33%
   Multiple Presence Factor, m = 1.0
   Design lane load was excluded in Top Slab design.
   A wheel load of 8 kips without impact factor was used for top slabs that are above a curb.
3. Earth Load:
   Vertical pressure = 140 pcf
   Lateral pressure:
   = 100 pcf for walls with flat embankment
   = 140 pcf For walls with slope embankment, 1.5:1 Max
4. Downdrag: ϕ = 34° and γ_E = 120 pcf.
5. Buoyancy: γ_W = 62.4 pcf to finished grade
6. Reinforced Concrete: f'c = 3.6 ksi, fy = 60.0 ksi.
7. Soil pressures shown are factored per AASHTO LRFD and include self-weight, live load and downdrag.

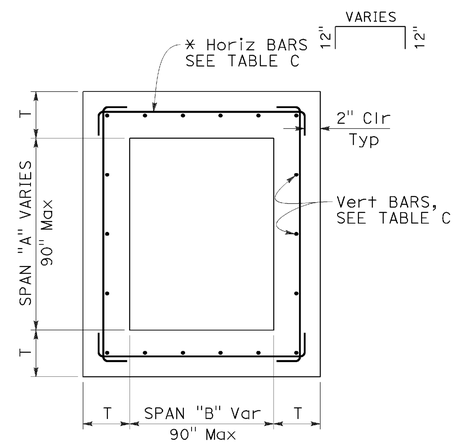

TYPICAL INLET PLAN

* ALTERNATIVE HORIZONTAL BARS

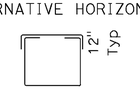

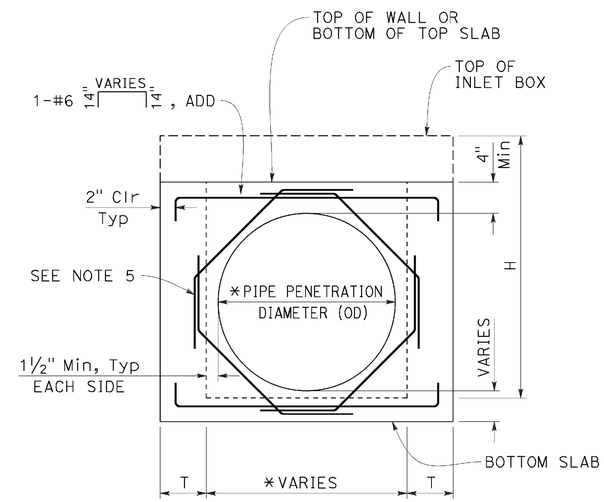

TYPICAL WALL
W/ PIPE OPENING

* SEE "SKEWED PIPE PLAN"

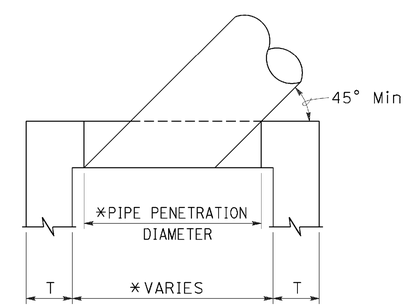

SKEWED PIPE PLAN

* ADJUST PIPE PENETRATION AND BOX WIDTH FOR SKEWED PIPES.

STATE OF CALIFORNIA
DEPARTMENT OF TRANSPORTATION

CIP DRAINAGE INLET NOTES

NO SCALE

RSP D72F DATED JULY 15, 2016 SUPPLEMENTS THE STANDARD PLANS BOOK DATED 2010.

REVISED STANDARD PLAN RSP D72F

2010 REVISED STANDARD PLAN RSP D72F

DATE PLOTTED => 28-JUL-2016
TIME PLOTTED => 14:12

Dist	COUNTY	ROUTE	POST MILES TOTAL PROJECT	SHEET No.	TOTAL SHEETS
02	Las, Sie,Las	70, 395	3.5/3.9 R0.0/R3.1,R0.0/R5.6	181	236

REGISTERED CIVIL ENGINEER

July 15, 2016
PLANS APPROVAL DATE

REGISTERED PROFESSIONAL ENGINEER Carl M. Duan No. C59976 Exp. 6-30-18 CIVIL STATE OF CALIFORNIA

THE STATE OF CALIFORNIA OR ITS OFFICERS OR AGENTS SHALL NOT BE RESPONSIBLE FOR THE ACCURACY OR COMPLETENESS OF SCANNED COPIES OF THIS PLAN SHEET.

TO ACCOMPANY PLANS DATED 06-15-16

TABLE A - CONCRETE QUANTITIES

TYPE	H=3'-0" TO 8'-0"		H=8'-1" TO 20'-0"	
	H=3'-0" (CY)	ADDITIONAL CONCRETE PER FOOT (CY)	H=8'-1" (CY)	ADDITIONAL CONCRETE PER FOOT (CY)
G1	0.95	0.220	SEE NOTE 2	SEE NOTE 2
G2*	2.00	0.411	5.11	0.525
G3	1.03	0.220	SEE NOTE 2	SEE NOTE 2
G4 (TYPE 18)*	2.02	0.411	5.14	0.525
G4 (TYPE 24)*	1.99	0.411	5.10	0.525
G5	1.02	0.220	SEE NOTE 2	SEE NOTE 2
G6	1.04	0.220	SEE NOTE 2	SEE NOTE 2
OS	1.53	0.278	5.08	0.504
OL7	2.06	0.278	6.17	0.566
OL10	2.85	0.278	6.85	0.566
OL14	3.81	0.278	7.78	0.566
OL21	5.71	0.278	9.62	0.566
GOL7	2.48	0.313	6.89	0.630
GOL10	3.41	0.313	7.85	0.630
GT1	1.72	0.248	SEE NOTE 2	SEE NOTE 2
GT2	2.93	0.530	7.73	0.762
GT3	1.74	0.348	SEE NOTE 2	SEE NOTE 2
GT4	2.83	0.530	7.62	0.762
GO	1.26	0.245	4.90	0.506
GDO	1.74	0.322	6.33	0.647

* Quantities are based on the minimum interior dimensions.

TABLE B - REINFORCEMENT QUANTITIES

TYPE	H=3'-0" TO 8'-0"		H=8'-1" TO 20'-0"	
	H=3'-0" (LB)	ADDITIONAL REINFORCEMENT PER FOOT (LB)	H=8'-1" (LB)	ADDITIONAL REINFORCEMENT PER FOOT (LB)
G1	118	22.20	SEE NOTE 2	SEE NOTE 2
G2*	729	86.48	1794	171.79
G3	118	22.20	SEE NOTE 2	SEE NOTE 2
G4 (TYPE 18)*	647	86.48	1675	171.79
G4 (TYPE 24)*	647	86.48	1675	171.79
G5	118	22.20	SEE NOTE 2	SEE NOTE 2
G6	118	22.20	SEE NOTE 2	SEE NOTE 2
OS	245	49.88	1057	120.77
OL7	458	50.53	1324	126.75
OL10	729	50.53	1595	126.75
OL14	982	50.53	1849	126.75
OL21	1453	50.53	2320	126.75
GOL7	644	83.57	1969	148.79
GOL10	883	83.57	2208	148.79
GT1	486	96.91	SEE NOTE 2	SEE NOTE 2
GT2	1040	117.08	2543	233.37
GT3	486	96.91	SEE NOTE 2	SEE NOTE 2
GT4	1001	117.08	2556	237.88
GO	308	32.44	1013	96.56
GDO	519	57.09	1654	165.66

* Quantities are based on the minimum interior dimensions.

TABLE D

INLET	CURB USED IN QUANTITIES
G1	-
G2	-
G3	A1-6
G4 (Type 18)	A1-6
G4 (Type 24)	A1-6
G5	B1-4
G6	½E
OS	-
OL7	-
OL10	-
OL14	-
OL21	-
GOL7	-
GOL10	-
GT1	D-6
GT2	E
GT3	A2-8
GT4	A2-8
GO	-
GDO	-

TABLE C - WALL REINFORCEMENT

TYPE	H≤8 (T=6",UON)		8<H≤20 (T=11",UON)	
	HORIZ	VERTICAL	HORIZ	VERTICAL
OS	#4 @ 8	#4 @ 6	#5 @ 6	#6 @ 4.5
OL	#4 @ 6	#4 @ 6	#5 @ 6	#6 @ 4.5
GOL	#5 @ 6	#5 @ 8	#6 @ 5	#6 @ 4.5
G1 (H≤6-6")	#3 @ 6	#3 @ 6	-	-
G2	T=9" #5 @ 5	#5 @ 5	T=11" #6 @ 4	#6 @ 4.5
G3 (H≤6-6")	#3 @ 6	#3 @ 6	-	-
G4	T=9" #5 @ 5	#5 @ 5	T=11" #6 @ 4	#6 @ 4.5
G5 (H≤6-6")	#3 @ 6	#3 @ 6	-	-
G6 (H≤6-6")	#3 @ 6	#3 @ 6	-	-
GT1 (H≤6-6")	#5 @ 6	#5 @ 6	-	-
GT2	T=8" #5 @ 6	#5 @ 6	#6 @ 4	#6 @ 4.5
GT3 (H≤6-6")	#5 @ 6	#5 @ 6	-	-
GT4	T=8" #5 @ 6	#5 @ 6	#6 @ 4	#6 @ 4.5
GO	#4 @ 9	#4 @ 6	#4 @ 6	#6 @ 4.5
GDO	#4 @ 6	#4 @ 6	#5 @ 4	#6 @ 4.5

TABLE E

SOIL PRESSURE BELOW BASE SLAB (ksf)		
TYPE	H=8'-0"	8'-0"< H ≤20'-0"
OS	2.93	5.56
OL*	2.93	5.56
GOL*	2.50	5.06
G1	3.67	-
G2	2.99	5.91
G3	3.67	-
G4	2.99	5.91
G5	3.67	-
G6	3.67	-
GT1	3.66	-
GT2	3.91	6.07
GT3	3.86	-
GT4	3.91	6.07
GO	3.42	6.11
GDO	2.52	6.95

* Main Box

NOTES:

1. No deduction or adjustment was made to the quantities of concrete and reinforcement for pipe openings, floor alternatives or curb type.
2. Maximum allowable height is 6'-6".
3. Quantities are approximate and for design purposes only.
4. Design is based on envelope of level and sloped ground.

STATE OF CALIFORNIA
DEPARTMENT OF TRANSPORTATION

CIP DRAINAGE INLET TABLES

NO SCALE

RSP D72G DATED JULY 15, 2016 SUPPLEMENTS THE STANDARD PLANS BOOK DATED 2010.

REVISED STANDARD PLAN RSP D72G

2010 REVISED STANDARD PLAN RSP D72G

DATE PLOTTED => 28-JUL-2016
TIME PLOTTED => 14:13

Dist	COUNTY	ROUTE	POST MILES TOTAL PROJECT	SHEET No.	TOTAL SHEETS
02	Las, Sie,Las	70, 395	3.5/3.9 R0.0/R3.1,R0.0/R5.6	182	236

REGISTERED CIVIL ENGINEER

July 15, 2016
PLANS APPROVAL DATE

REGISTERED PROFESSIONAL ENGINEER Carl M. Duan No. C59976 Exp. 6-30-18 CIVIL STATE OF CALIFORNIA

THE STATE OF CALIFORNIA OR ITS OFFICERS OR AGENTS SHALL NOT BE RESPONSIBLE FOR THE ACCURACY OR COMPLETENESS OF SCANNED COPIES OF THIS PLAN SHEET.

TO ACCOMPANY PLANS DATED 06-15-16

NOTE:

1. For notes and Table 2, See Revised Standard Plan RSP D73C.

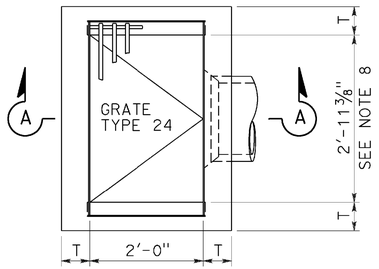

PLAN
TYPE G1

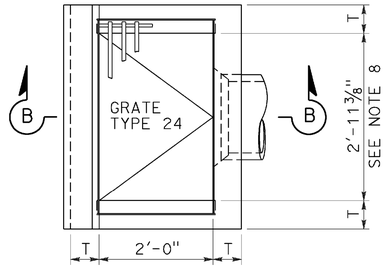

PLAN
TYPE G3

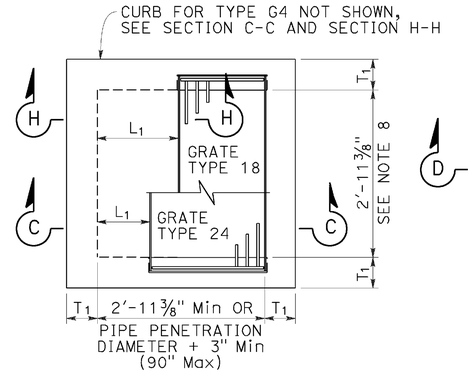

PLAN
STANDARD TYPE G2 OR G4
(INTEGRAL TOP ALTERNATIVE)
FOR "L" AND "T" VALUES, SEE TABLE 1

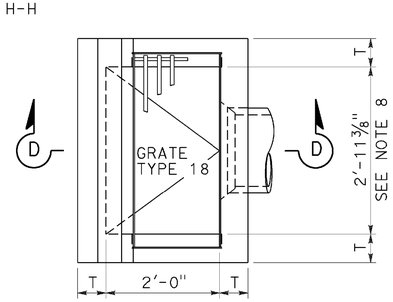

PLAN
TYPE G5

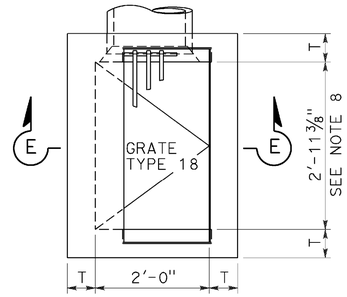

PLAN
TYPE G6

TABLE 1		
	T_1	Vert BARS
L_1 AND L_2 < 2'-10"	8"	#4 @ 12
L_1 OR L_2 > 2'-10"	12"	#5 @ 12

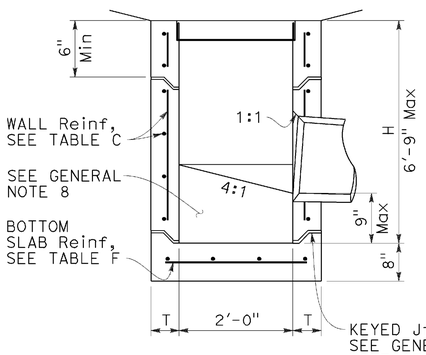

SECTION A-A

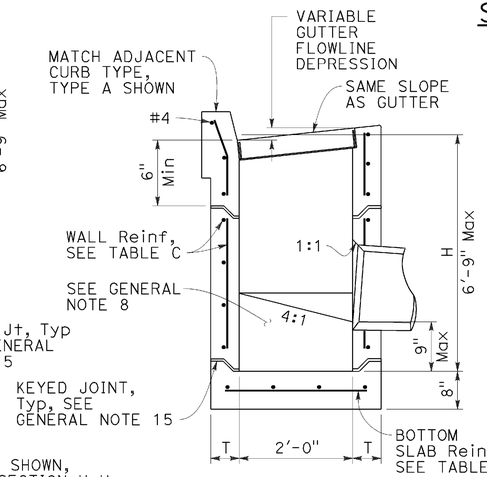

SECTION B-B

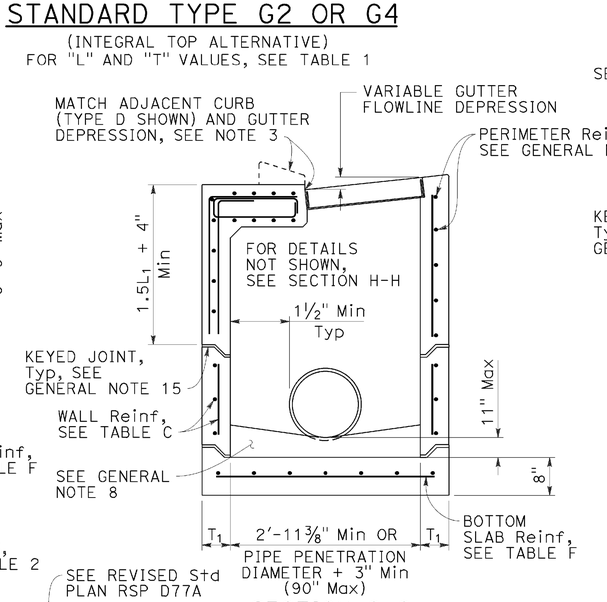

SECTION C-C
FOR "L1", "L2" AND "T1" VALUES, SEE "TABLE 1"

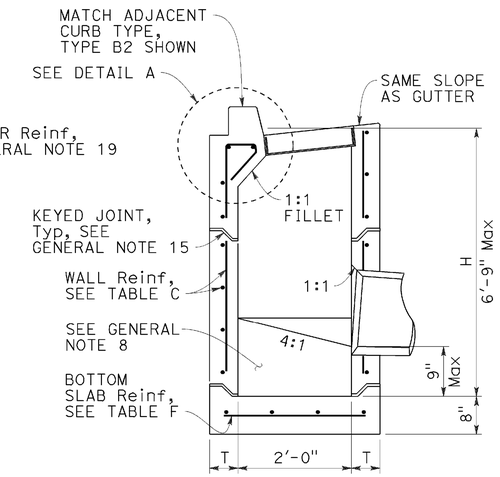

SECTION D-D

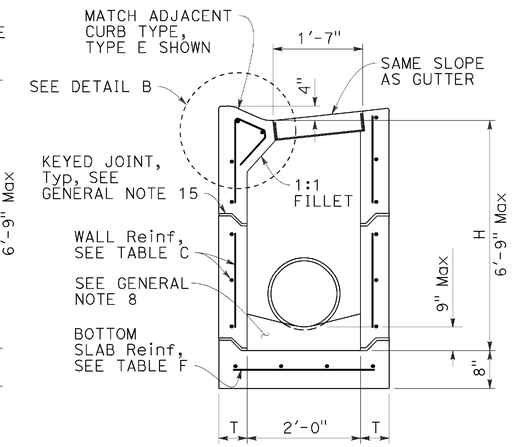

SECTION E-E

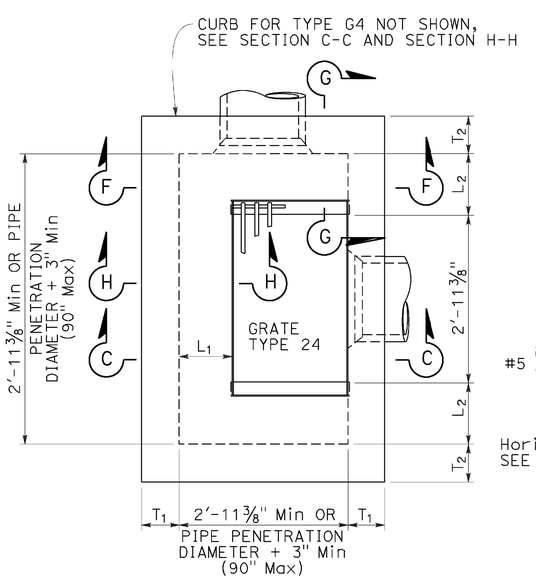

PLAN
EXPANDED
TYPE G2 OR G4
(INTEGRAL TOP ALTERNATIVE)
FOR "L1", "L2" AND "T1" VALUES, SEE "TABLE 1"

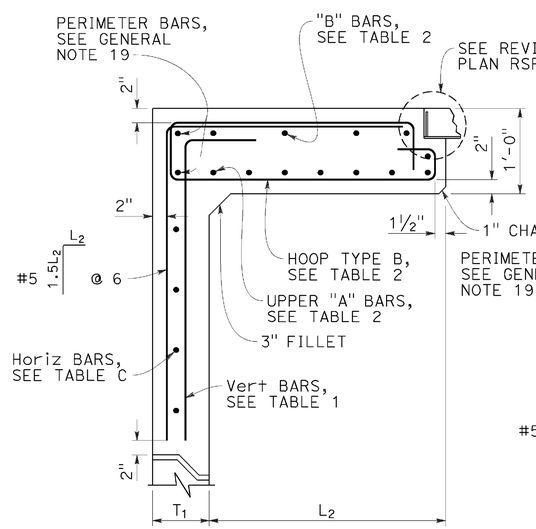

SECTION G-G
FOR "L1", "L2" AND "T1" VALUES, SEE "TABLE 1"

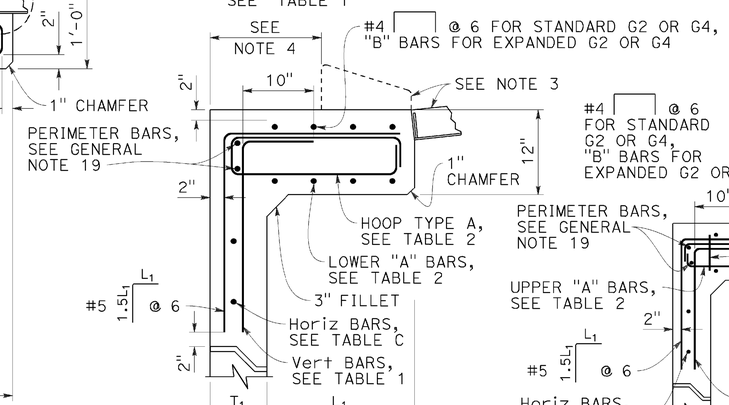

SECTION H-H
FOR "L1", "L2" AND "T1" VALUES, SEE "TABLE 1"

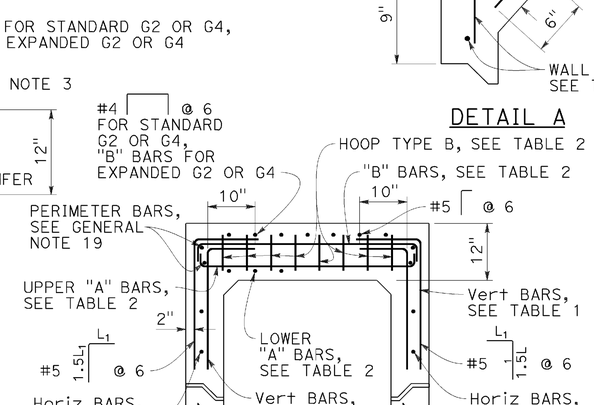

SECTION F-F
FOR "L1", "L2" AND "T1" VALUES, SEE "TABLE 1"

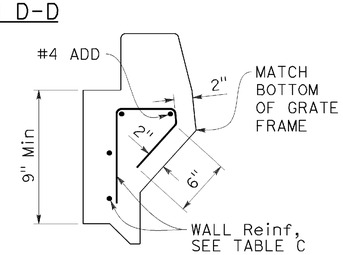

DETAIL A

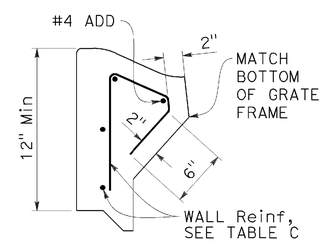

DETAIL B

STATE OF CALIFORNIA
DEPARTMENT OF TRANSPORTATION

PRECAST DRAINAGE INLETS TYPES G1, G2, G3, G4, G5 AND G6

NO SCALE

RSP D73B DATED JULY 15, 2016 SUPPLEMENTS THE STANDARD PLANS BOOK DATED 2010.

REVISED STANDARD PLAN RSP D73B

2010 REVISED STANDARD PLAN RSP D73B

DATE PLOTTED => 28-JUL-2016
TIME PLOTTED => 14:13

Dist	COUNTY	ROUTE	POST MILES TOTAL PROJECT	SHEET No.	TOTAL SHEETS
02	Las, Sie,Las	70, 395	3.5/3.9 R0.0/R3.1,R0.0/R5.6	183	236

REGISTERED CIVIL ENGINEER

July 15, 2016
PLANS APPROVAL DATE

REGISTERED PROFESSIONAL ENGINEER Carl M. Duan No. C59976 Exp. 6-30-18 CIVIL STATE OF CALIFORNIA

THE STATE OF CALIFORNIA OR ITS OFFICERS OR AGENTS SHALL NOT BE RESPONSIBLE FOR THE ACCURACY OR COMPLETENESS OF SCANNED COPIES OF THIS PLAN SHEET.

TO ACCOMPANY PLANS DATED 06-15-16

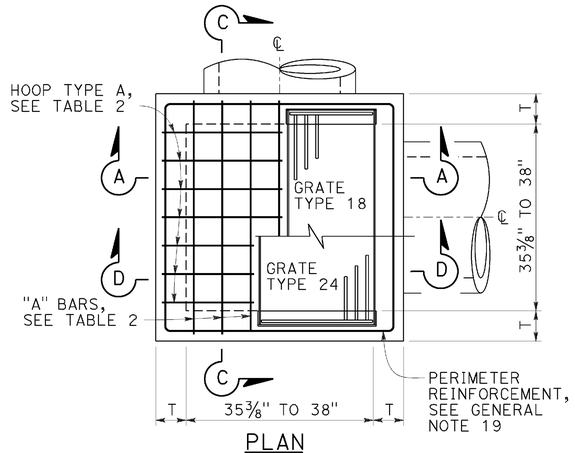

PLAN

STANDARD TYPE G2 OR G4

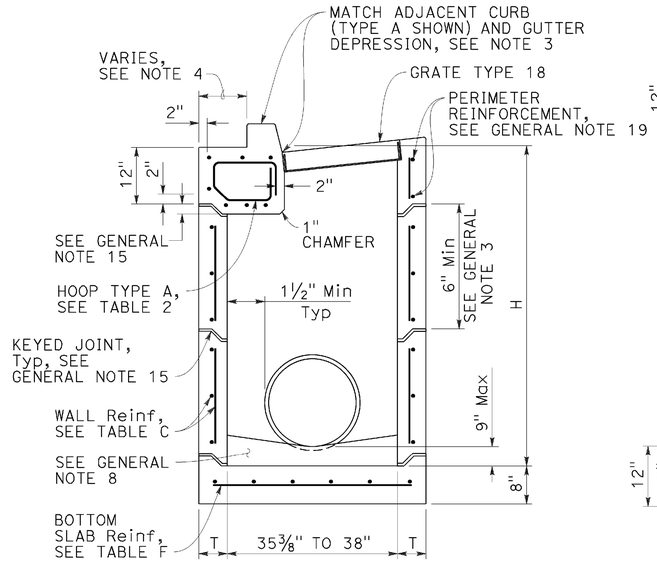

SECTION A-A
(WITH G4 TOP)

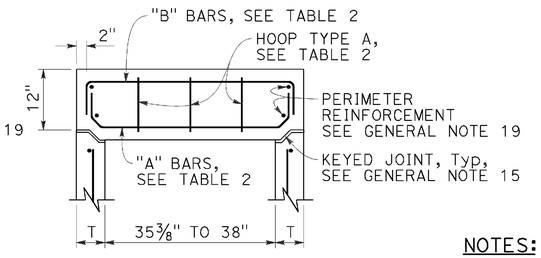

SECTION C-C

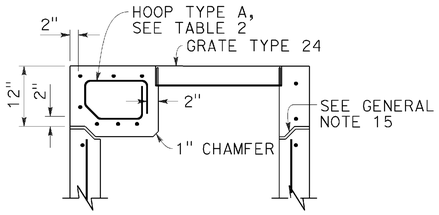

SECTION D-D
(WITH G2 TOP)

NOTES:

1. See Revised Standard Plan RSP D73F for General Notes and additional details. See Revised Standard Plan RSP D73G for additional tables, wall thickness "T" and quantities.
2. Type G4 inlet can use Grate Type 18 or 24. Type G2 inlet uses Grate Type 24.
3. G4 inlet details are the same as the G2 with the addition of a curb and sloped grate that matches the adjacent curb and gutter depression.
4. Dimension will vary with different grates, curb types, box width and wall thickness.
5. 2" unless inlet is expanded in the Span "A" direction, then clearance is 2" plus the diameter of the lower "A" bar.
6. See Revised Standard Plan RSP D73B for integral top slab alternative.
7. Interior dimension of lower sections of inlet may be 3'-0" provided top section conforms to the requirements for frame and grate types on Revised Standard Plan RSP D77A. The wall thickness of top sections may transition from "T" to "T"+5/16" to meet this requirement. Minimum height of thickened wall shall = "T".

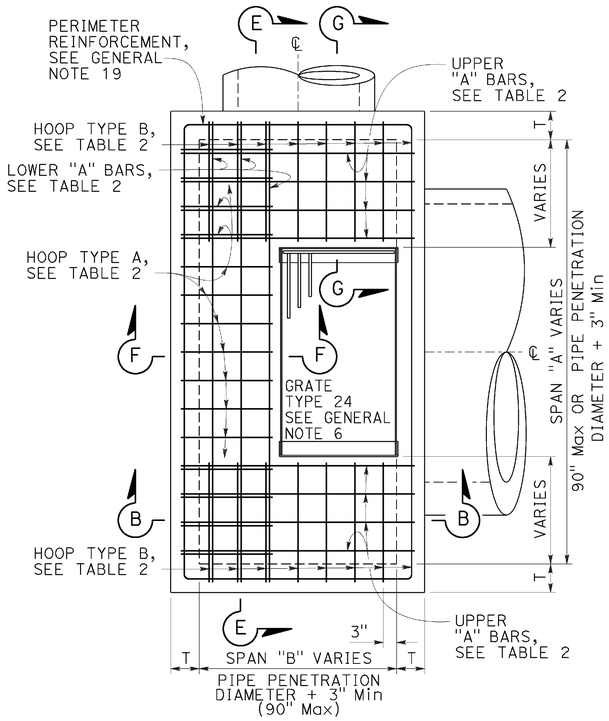

PLAN
EXPANDED
TYPE G2 OR G4
(TOP REBAR NOT SHOWN)

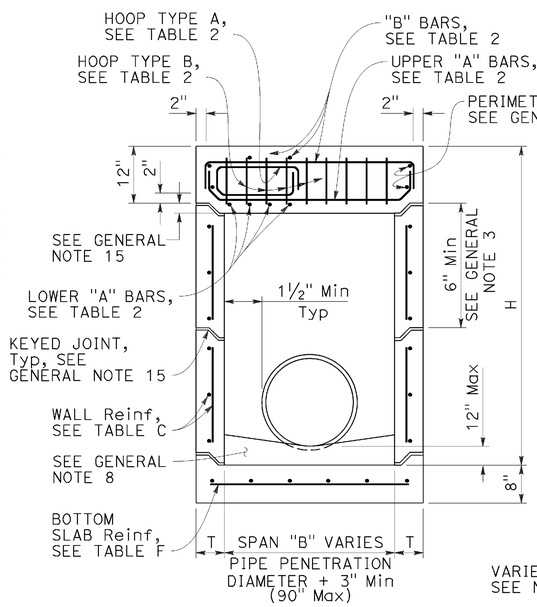

SECTION B-B
(WITH G2 TOP)

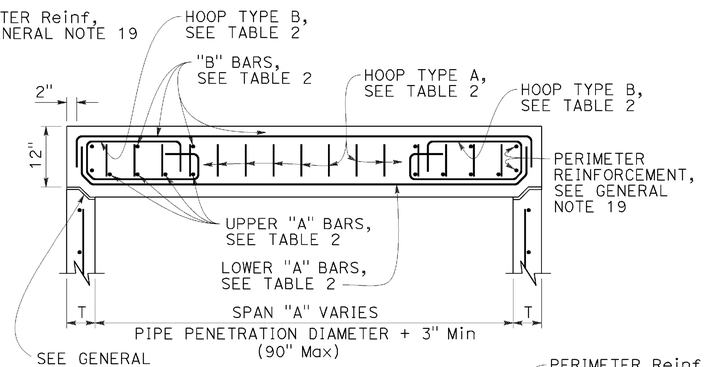

SECTION E-E

TABLE 2 - TOP SLAB REINFORCEMENT		
16 BAR DIAMETERS "A" & "B" BARS VARIES BEND TO AVOID KEYED JOINT WHERE SHOWN		
	W/ CURB	W/O CURB
"A" BARS	#4 @ 5 (2 BARS Min)	#5 @ 5 (3 BARS Min)
"B" BARS	#4 @ 10 (2 BARS Min)	#4 @ 10 (2 BARS Min)
HOOPS ("A" & "B")	#4 @ 5	#5 @ 5

ROTATE "A" AND "B" BARS SO HOOKED ENDS WILL MAINTAIN 2" CLEAR COVERAGE.

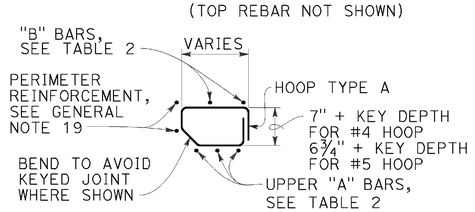

HOOP TYPE A

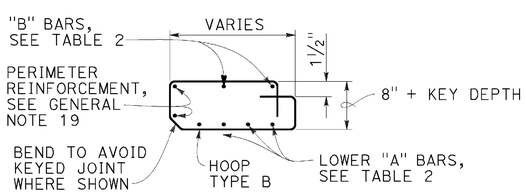

HOOP TYPE B

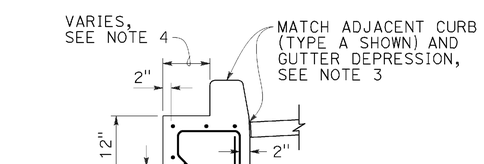

SECTION F-F
(WITH G4 TOP)

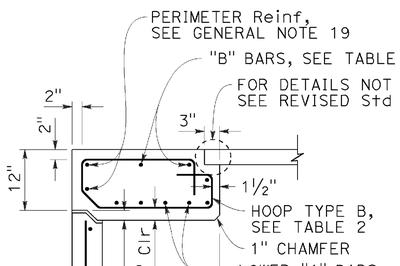

SECTION G-G

STATE OF CALIFORNIA
DEPARTMENT OF TRANSPORTATION

PRECAST DRAINAGE INLETS TYPES G2 AND G4

NO SCALE

RSP D73C DATED JULY 15, 2016 SUPPLEMENTS THE STANDARD PLANS BOOK DATED 2010.

REVISED STANDARD PLAN RSP D73C

2010 REVISED STANDARD PLAN RSP D73C

DATE PLOTTED => 28-JUL-2016
TIME PLOTTED => 14:13

Dist	COUNTY	ROUTE	POST MILES TOTAL PROJECT	SHEET No.	TOTAL SHEETS
02	Las, Sie,Las	70, 395	3.5/3.9 R0.0/R3.1,R0.0/R5.6	184	236

REGISTERED CIVIL ENGINEER

July 15, 2016
PLANS APPROVAL DATE

REGISTERED PROFESSIONAL ENGINEER Carl M. Duan No. C59976 Exp. 6-30-18 CIVIL STATE OF CALIFORNIA

THE STATE OF CALIFORNIA OR ITS OFFICERS OR AGENTS SHALL NOT BE RESPONSIBLE FOR THE ACCURACY OR COMPLETENESS OF SCANNED COPIES OF THIS PLAN SHEET.

TO ACCOMPANY PLANS DATED 06-15-16

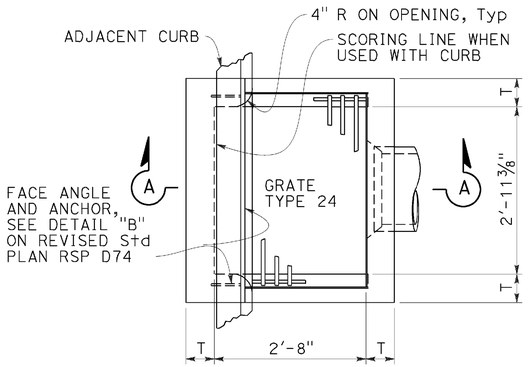

PLAN
TYPE GO

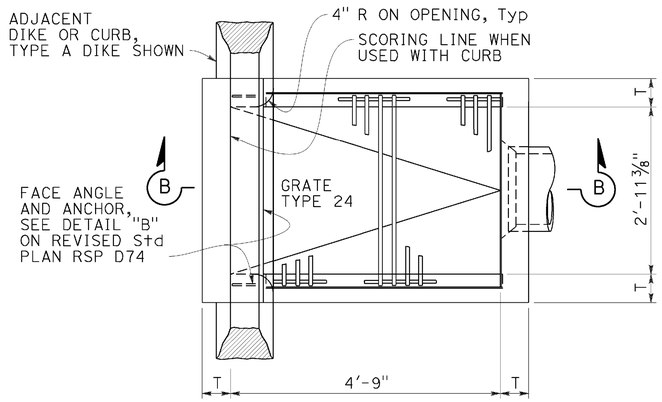

PLAN
TYPE GDO

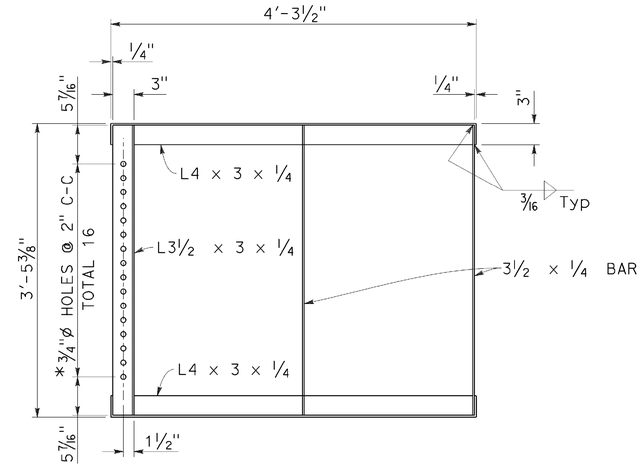

GRATE FRAME FOR TYPE GDO INLET

* HOLES REQUIRED ONLY WITH TRASH RACK

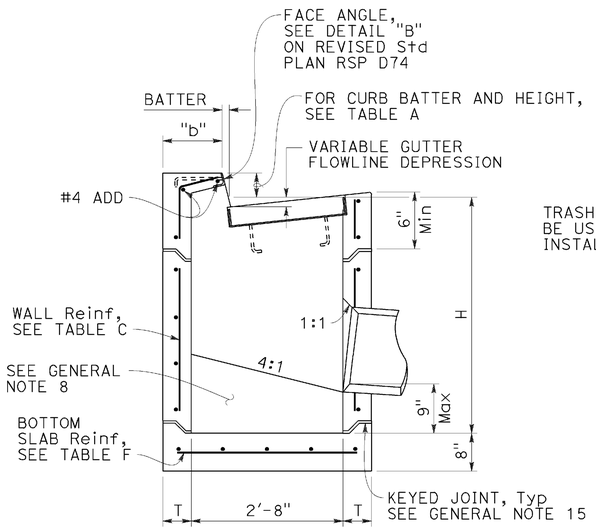

SECTION A-A

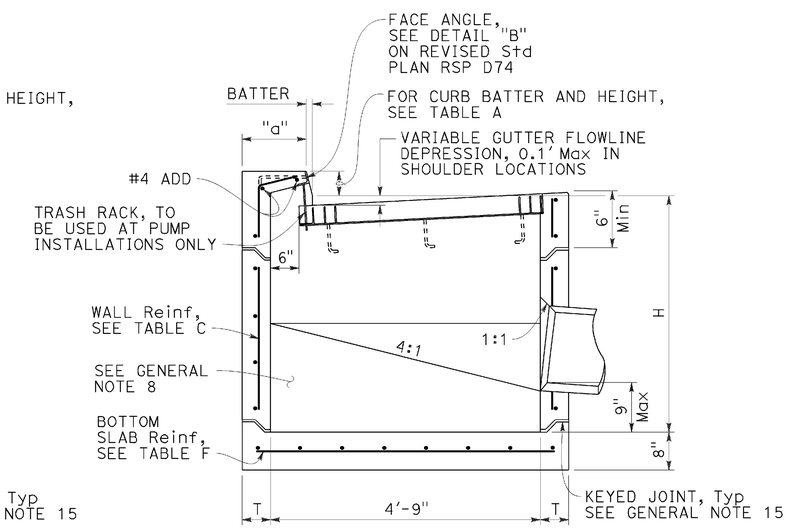

SECTION B-B

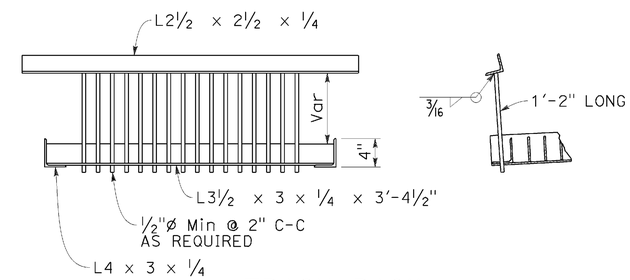

TRASH RACK

FOR USE WITH PUMP INSTALLATION

TABLE A				
CURB TYPE	NORMAL CURB HEIGHT	CURB BATTER	"a" DIMENSION	"b" DIMENSION
A1-6	6"	1½"	T+7½"	T+6½"
A1-8	8"	2"	T+7"	T+6"
B1-6	6"	4"	T+5"	T+4"
TYPE A DIKE	6"	3"	T+6"	T+5"

Height of curb opening will vary with the type of curb and the depth of the local depression.

NOTES:

1. See Revised Standard Plan RSP D73F for General Notes and additional details. See Revised Standard Plan RSP D73G for tables, wall thickness "T" and quantities.
2. Where shown on the project plans, place a ¾"ø plain round protection bar horizontally across the length of the opening and bend back 4" into the inlet wall on each side.
3. Complete joint penetration butt welds may be substituted for the fillet welds on all anchors.
4. Standard square, hexagon, round or equivalent headed anchors may be substituted for the right angle hooks on the anchors shown on this plan.

STATE OF CALIFORNIA
DEPARTMENT OF TRANSPORTATION

PRECAST DRAINAGE INLETS TYPES GO AND GDO

NO SCALE

RSP D73E DATED JULY 15, 2016 SUPPLEMENTS THE STANDARD PLANS BOOK DATED 2010.

REVISED STANDARD PLAN RSP D73E

2010 REVISED STANDARD PLAN RSP D73E

DATE PLOTTED => 28-JUL-2016
TIME PLOTTED => 14:14

Dist	COUNTY	ROUTE	POST MILES TOTAL PROJECT	SHEET No.	TOTAL SHEETS
02	Las, Sie,Las	70, 395	3.5/3.9 R0.0/R3.1,R0.0/R5.6	185	236

REGISTERED CIVIL ENGINEER

July 15, 2016
PLANS APPROVAL DATE

REGISTERED PROFESSIONAL ENGINEER Carl M. Duan No. C59976 Exp. 6-30-18 CIVIL STATE OF CALIFORNIA

THE STATE OF CALIFORNIA OR ITS OFFICERS OR AGENTS SHALL NOT BE RESPONSIBLE FOR THE ACCURACY OR COMPLETENESS OF SCANNED COPIES OF THIS PLAN SHEET.

TO ACCOMPANY PLANS DATED 06-15-16

GENERAL NOTES:

1. "H" is measured from top of bottom slab to the normal gutter grade line undepressed at the curb face.
2. For "T" wall thickness and reinforcement, see Table C on Revised Standard Plan RSP D73G.
3. Wall reinforcement must be placed at the center of wall thickness with horizontal bars placed on the exterior face. Bottom slab concrete cover must be 3" clear on the interior side face unless otherwise noted. Top slab concrete cover must be 2" clear on the exterior face unless otherwise noted. Short independent wall sections or height adjustment rings 6" to 24" high must have a minimum of two #4 horizontal bars. Reinforcement spacing is in inches unless otherwise noted.
4. Steps - None required where "H" is less than 2'-6". Where "H" is 2'-6" or more, install steps with lowest rung 1'-0" above the floor and highest rung not more than 6" below bottom of lid. The distance between steps must not exceed 1'-0" and be uniform throughout the length of the wall. Place steps in the wall without an opening. Steps inserts may be substituted for the bar steps. Step inserts must comply with State Industrial Safety Requirements. See Revised Standard Plan RSP D74 for step details.
5. Pipe(s) can be placed in any wall. Adjacent to each side of the opening, place additional reinforcement equivalent to half the interupted main reinforcement. For larger pipes greater than or equal to 42" diameter, also add 4 diagonal bars, 1 bar each side. Bars must be the same size as the larger of the main vertical or horizontal bars. Extend bars one development length past the intersection with the adjacent diagonal bar, or where bars intersect mid thickness of adjacent wall bottom or top of non-continuous wall, bend ends as required into same plane.
6. Set inlet so that grate bars are parallel to direction of principal surface flow.
7. Curb section must match adjacent curb.
8. Except for inlets used as junction boxes, basin floors must have wood trowel finish and a minimum slope of 4:1, unless otherwise noted, from all directions toward outlet pipe by casting grout on top of the bottom slab. Grout must be placed prior to backfill.
9. See Revised Standard Plans RSP D77A and RSP D77B for grate and frame details and weights of miscellaneous iron and steel.
10. See Standard Plans D78A and D78B for gutter depression details.
11. See Revised Standard Plans RSP A87A and RSP A87B for curb and dike details.
12. Details shown apply to metal, concrete and plastic pipe(s).
13. The Contractor may use WWR instead of bar reinforcement. The ratio of bar reinforcement to WWR shall be based on the yield strength ratio.
14. Seal precast inlets connection openings between wall and pipe with non-shrink grout or resilient connectors as specified in the Special Provisions. Precast inlets shall have mortared connections conforming to details for Type GCP Inlet shown on Revised Standard Plan RSP D75B. See Standard Specifications for mortar composition.
15. Where shown, provide precast inlets with separate top sections for final grade adjustment. Provide keyed joints with butyl rubber sealant between the top section and wall, multiple wall sections, and wall and bottom slab. Joint design may vary but must be 1" to 3" in depth. For tongue type joints, tongue down orientation is not allowed. For keyed joints, keyway up, keyway down or tongue up configurations are allowed. Only one key type is allowed for each drainage inlet.
16. Non-shrink grout can be used for upper most joint to facilitate final top grade adjustment.
17. Provide a level and firm sand bedding on which to place precast inlets. Extend sand bedding under all structure backfill.
18. For Integral Base, see Detail "A".
19. Perimeter reinforcement must not be smaller than main bars and #4 and serves as a rigid frame to position and attach the required structural reinforcement and may be tack welded at outer corners when using ASTM A706 weldable bars.
20. Inlet extensions may be cast in place after placement of main box and placement and compaction of backfill. Concrete strength must be 3.6 ksi minimum. All slab and wall thicknesses must be per Revised Standard Plan RSP D72A. All reinforcement shall extend a minimum of 24" from precast main inlet box.

DESIGN NOTES:

1. Design Specifications: AASHTO LRFD Bridge Design Specifications, 6th edition with 2012 Interims and Errata and CA Amendments.
2. Live Load (AASHTO LRFD 3.6.1.2):
   HL-93, consists of design truck or tandem, and design lane load.
   Dynamic Load Allowance, IM = 33%
   Multiple Presence Factor, m = 1.0
   Design lane load was excluded in Top Slab design.
   A wheel load of 8 kips without impact factor was used for top slabs that are above a curb.
3. Earth Load:
   Vertical pressure = 140 pcf
   Lateral pressure:
   = 100 pcf for walls with flat embankment
   = 140 pcf For walls with slope embankment, 1.5:1 Max
4. Downdrag: ϕ = 34° and γ_E = 120 pcf.
5. Buoyancy: γ_W = 62.4 pcf to finished grade.
6. Reinforced Concrete: f'c = 5.0 ksi, fy = 60.0 ksi.
7. Tables are based on the worst case from the level ground and sloped ground.
8. Soil pressures shown are factored per AASHTO LRFD and include self-weight, live load and downdrag.

SPAN "A" OR "B" (IN)	L (IN)
<38	34
38 TO 50	40
51 TO 64	47
65 TO 76	53
77 TO 90	60

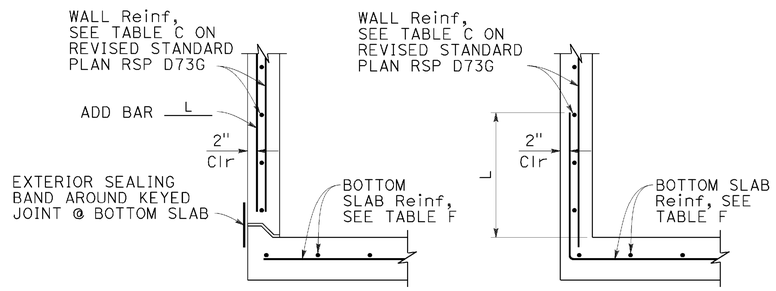

BASE WITH KEYED JOINT INTEGRAL BASE

DETAIL "A"

FOR INTEGRAL BASE, CLEARANCE BETWEEN PIPE PENETRATION AND BASE SLAB MAY BE AS SHOWN IN CIP ALTERNATIVE STANDARD PLAN SHEET.

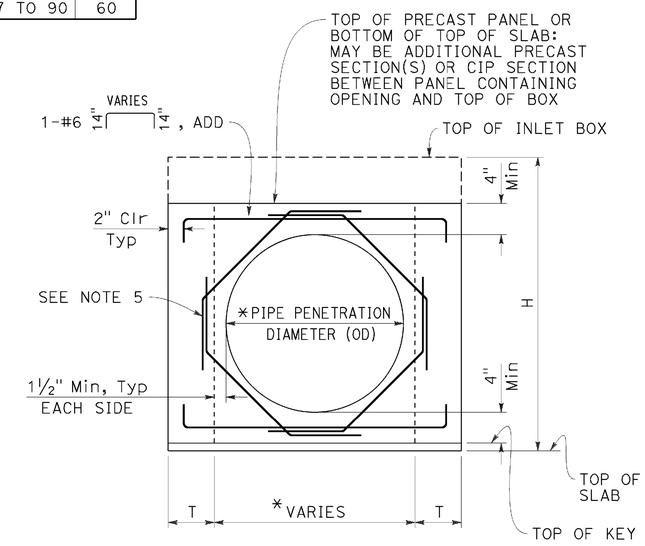

BASE WITH KEYED JOINT

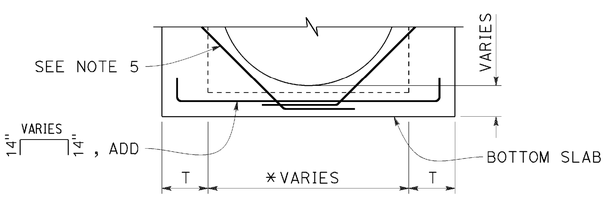

INTEGRAL BASE

FOR DETAILS NOT SHOWN, SEE "BASE WITH KEYED JOINT"

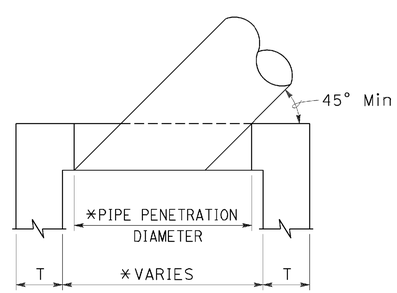

SKEWED PIPE PLAN

* ADJUST PIPE PENETRATION AND BOX WIDTH FOR SKEWED PIPES.

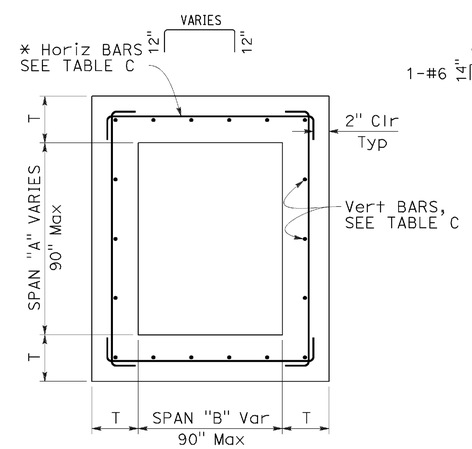

TYPICAL INLET PLAN

* ALTERNATIVE HORIZONTAL BARS

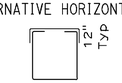

TYPICAL WALL W/ PIPE OPENING

* SEE "SKEWED PIPE PLAN"

STATE OF CALIFORNIA
DEPARTMENT OF TRANSPORTATION

PRECAST DRAINAGE INLET NOTES

NO SCALE

RSP D73F DATED JULY 15, 2016 SUPPLEMENTS THE STANDARD PLANS BOOK DATED 2010.

REVISED STANDARD PLAN RSP D73F

2010 REVISED STANDARD PLAN RSP D73F

DATE PLOTTED => 28-JUL-2016
TIME PLOTTED => 14:15

Dist	COUNTY	ROUTE	POST MILES TOTAL PROJECT	SHEET No.	TOTAL SHEETS
02	Las, Sie,Las	70, 395	3.5/3.9 R0.0/R3.1,R0.0/R5.6	186	236

REGISTERED CIVIL ENGINEER

July 15, 2016
PLANS APPROVAL DATE

REGISTERED PROFESSIONAL ENGINEER Carl M. Duan No. C59976 Exp. 6-30-18 CIVIL STATE OF CALIFORNIA

THE STATE OF CALIFORNIA OR ITS OFFICERS OR AGENTS SHALL NOT BE RESPONSIBLE FOR THE ACCURACY OR COMPLETENESS OF SCANNED COPIES OF THIS PLAN SHEET.

TO ACCOMPANY PLANS DATED 06-15-16

2010 REVISED STANDARD PLAN RSP D73G

TABLE A - CONCRETE QUANTITIES

TYPE	H=3'-0" TO 8'-0"		H=8'-1" TO 20'-0"	
	H=3'-0" (CY)	ADDITIONAL CONCRETE PER FOOT (CY)	H=8'-1" (CY)	ADDITIONAL CONCRETE PER FOOT (CY)
G1	0.95	0.220	SEE NOTE 2	SEE NOTE 2
G2*	1.25	0.255	2.55	0.255
G3	1.06	0.220	SEE NOTE 2	SEE NOTE 2
G4 (TYPE 18)*	1.41	0.255	2.71	0.255
G4 (TYPE 24)*	1.36	0.255	2.65	0.255
G5	1.09	0.220	SEE NOTE 2	SEE NOTE 2
G6	1.14	0.220	SEE NOTE 2	SEE NOTE 2
OS	1.28	0.278	2.69	0.278
OL7	1.92	0.278	3.33	0.278
OL10	2.43	0.278	3.84	0.278
OL14	3.16	0.278	4.57	0.278
OL21	4.58	0.278	5.99	0.278
GOL7	2.36	0.313	4.04	0.434
GOL10	2.84	0.313	4.53	0.434
GT1	2.30	0.480	SEE NOTE 2	SEE NOTE 2
GT2	2.71	0.530	5.40	0.530
GT3	2.29	0.480	SEE NOTE 2	SEE NOTE 2
GT4	2.69	0.530	5.39	0.530
GO	1.25	0.245	2.37	0.245
GDO	1.64	0.322	3.37	0.446

* Quantities are based on the minimum interior dimensions.

TABLE B - REINFORCEMENT QUANTITIES

TYPE	H=3'-0" TO 8'-0"		H=8'-1" TO 20'-0"	
	H=3'-0" (LB)	ADDITIONAL REINFORCEMENT PER FOOT (LB)	H=8'-1" (LB)	ADDITIONAL REINFORCEMENT PER FOOT (LB)
G1	88.5	21.90	SEE NOTE 2	SEE NOTE 2
G2*	151.5	24.54	277.4	38.64
G3	92.9	21.90	SEE NOTE 2	SEE NOTE 2
G4 (TYPE 18)*	134.4	24.54	260.3	38.64
G4 (TYPE 24)*	125.1	24.54	251.0	38.64
G5	92.5	21.90	SEE NOTE 2	SEE NOTE 2
G6	92.5	21.90	SEE NOTE 2	SEE NOTE 2
OS	145.8	35.57	327.8	49.60
OL7	328.0	35.57	510.0	49.60
OL10	467.5	35.57	649.5	49.60
OL14	667.5	35.57	849.5	49.60
OL21	1056.1	35.57	1238.1	49.60
GOL7	474.7	45.17	706.8	74.02
GOL10	604.9	45.17	836.9	74.02
GT1	349.0	80.48	SEE NOTE 2	SEE NOTE 2
GT2	403.7	86.82	849.1	135.15
GT3	347.0	80.48	SEE NOTE 2	SEE NOTE 2
GT4	403.7	86.82	849.1	135.15
GO	99.8	23.75	221.7	37.46
GDO	208.8	46.22	446.2	75.61

* Quantities are based on the minimum interior dimensions.

TABLE D

INLET	CURB USED IN QUANTITIES
G1	-
G2	-
G3	A1-6
G4 (Type 18)	A1-6
G4 (Type 24)	A1-6
G5	B1-4
G6	½E
OS	-
OL7	-
OL10	-
OL14	-
OL21	-
GOL7	-
GOL10	-
GT1	D-6
GT2	E
GT3	A2-8
GT4	A2-8
GO	-
GDO	-

TABLE C - WALL REINFORCEMENT

TYPE	H ≤8'-0" (T=6", UON)			8'-0"< H ≤20'-0" (T=8", UON)		
	HORIZONTAL	VERTICAL	*ADD	HORIZONTAL	VERTICAL	*ADD
OS	#4@6	#3@8	#3@8	#4@4 (T=6")	#3@8	#3@8
OL	#4@6	#3@8	#3@8	#4@4 (T=6")	#3@8	#3@8
GOL	#4@5	#3@8	#3@8	#5@5	#3@6	#3@6
G1 (H ≤6'-9")	#4@9	#3@8	#3@8	-	-	-
G2 & G4 (a** ≤38")	#4@9	#3@8	#3@8	#4@5 (T=6")	#3@8	#3@8
G2 & G4 (38" < a** ≤50")	#4@6	#3@8	#3@8	#4@4 (T=6")	#3@8	#3@8
G2 & G4 (50" < a** ≤64")	#4@5	#3@8	#3@8	#5@5	#3@6	#3@6
G2 & G4 (64"< a** ≤76")	#5@7 (T=8")	#3@6	#3@6	#5@4	#3@6	#5@6
G2 & G4 (76" < a** ≤90")	#5@5 (T=8")	#3@6	#3@6	#5@3	#3@6	#5@6
G3 (H ≤6'-9")	#4@9	#3@8	#3@8	-	-	-
G5 (H ≤6'-9")	#4@9	#3@8	#3@8	-	-	-
G6 (H ≤6'-9")	#4@9	#3@8	#3@8	-	-	-
GT1 (H ≤6'-9")	#5@5 (T=8")	#3@6	#3@6	-	-	-
GT2	#5@5 (T=8")	#3@6	#3@6	#5@3	#3@6	#5@6
GT3 (H ≤6'-9")	#5@5 (T=8")	#3@6	#3@6	-	-	-
GT4	#5@5 (T=8")	#3@6	#3@6	#5@3	#3@6	#5@6
GO	#4@9	#3@8	#3@8	#4@5 (T=6")	#3@8	#3@8
GDO	#4@5	#3@8	#3@8	#5@5	#3@6	#3@6

* See Detail A on Revised Standard Plan RSP D73F for additional vertical bars at the base.
** a = Larger interior span

TABLE E

SOIL PRESSURE BELOW BASE SLAB (ksf)

TYPE	H ≤8'-0"	8'-0"< H ≤20'-0"
OS	2.89	5.68
OL*	2.89	5.68
GOL*	2.36	4.93
G1 (H ≤6'-9")	3.51	-
G2 & G4 (a** ≤38")	2.96	5.79
G2 & G4 (38" < a** ≤50")	2.21	4.51
G2 & G4 (50" < a** ≤64")	3.19	4.89
G2 & G4 (64"< a** ≤76")	2.50	4.23
G2 & G4 (76" < a** ≤90")	2.04	3.56
G3 (H ≤6'-9")	3.51	-
G5 (H ≤6'-9")	3.51	-
G6 (H ≤6'-9")	3.51	-
GT1 (H ≤6'-9")	3.41	-
GT2	3.60	6.42
GT3 (H ≤6'-9")	3.41	-
GT4	3.60	6.42
GO	3.37	6.46
GDO	2.48	7.30

* Main Box
** a = Larger interior span

TABLE F

BASE SLAB REINFORCEMENT (T=8", UON)

TYPE	H ≤8'-0"	8'-0"< H ≤20'-0"
OS	#4@8 (EW)	#4@5 (EW)
OL*	#4@8 (EW)	#4@5 (EW)
GOL*	#4@6 (EW)	#4@4 (EW)
G1 (H ≤6'-9")	#4@10 (EW)	-
G2 & G4 (a** ≤38")	#4@10 (EW)	#4@6 (EW)
G2 & G4 (38" < a** ≤50")	#4@8 (EW)	#4@5 (EW)
G2 & G4 (50" < a** ≤64")	#4@6 (EW)	#4@4 (EW)
G2 & G4 (64"< a** ≤76")	#4@5 (EW)	#4@3 (EW)
G2 & G4 (76" < a** ≤90")	#4@4 (EW)	#5@3 (EW)
G3 (H ≤6'-9")	#4@10 (EW)	-
G5 (H ≤6'-9")	#4@10 (EW)	-
G6 (H ≤6'-9")	#4@10 (EW)	-
GT1 (H ≤6'-9")	#4@4 (EW)	-
GT2	#4@4 (EW)	#5@3 (EW)
GT3 (H ≤6'-9")	#4@4 (EW)	-
GT4	#4@4 (EW)	#5@3 (EW)
GO	#4@10 (EW)	#4@6 (EW)
GDO	#4@6 (EW)	#4@4 (EW)

(EW) Each Way
* Main Box
** a = Larger interior span

NOTES:

1. No deduction or adjustment was made to the quantities of concrete and reinforcement for pipe openings, floor alternatives or curb type.
2. Maximum allowable height is 6'-9".
3. Quantities are approximate and for design purposes only.
4. Design is based on envelope of level and sloped ground.

STATE OF CALIFORNIA
DEPARTMENT OF TRANSPORTATION

PRECAST DRAINAGE INLET TABLES

NO SCALE

RSP D73G DATED JULY 15, 2016 SUPPLEMENTS THE STANDARD PLANS BOOK DATED 2010.

REVISED STANDARD PLAN RSP D73G

DATE PLOTTED => 28-JUL-2016
TIME PLOTTED => 14:15

Dist	COUNTY	ROUTE	POST MILES TOTAL PROJECT	SHEET No.	TOTAL SHEETS
02	Las, Sie,Las	70, 395	3.5/3.9 R0.0/R3.1,R0.0/R5.6	187	236

REGISTERED CIVIL ENGINEER

July 15, 2016
PLANS APPROVAL DATE

REGISTERED PROFESSIONAL ENGINEER Carl M. Duan No. C59976 Exp. 6-30-18 CIVIL STATE OF CALIFORNIA

THE STATE OF CALIFORNIA OR ITS OFFICERS OR AGENTS SHALL NOT BE RESPONSIBLE FOR THE ACCURACY OR COMPLETENESS OF SCANNED COPIES OF THIS PLAN SHEET.

TO ACCOMPANY PLANS DATED 06-15-16

2010 REVISED STANDARD PLAN RSP D74

FACE ANGLE DETAIL "A"	
LENGTH OF CURB OPENING	No. OF ANCHORS
3'-6" OR LESS	2
7'-0"	3
10'-0"	4
14'-0"	5
21'-0"	7

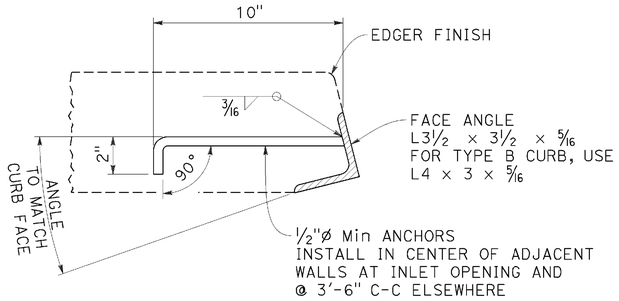

DETAIL "A"

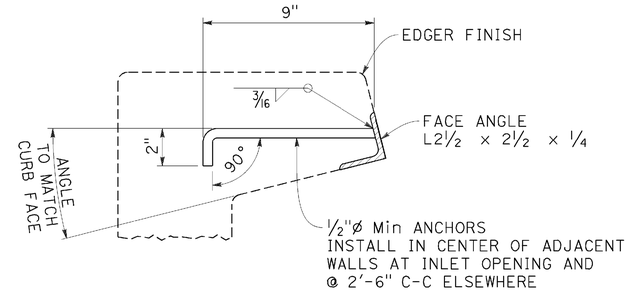

DETAIL "B"

FACE ANGLE AND ANCHOR

NOTE:

1. When shown on the project plans, place a ¾"ø plain round protection bar horizontally across the length of the opening and bend back 4" into the inlet wall on each side.

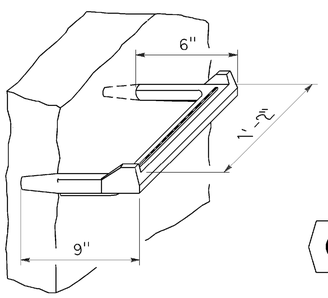

STEP INSERT

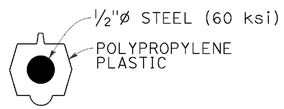

TYPICAL SECTION
(STEP INSERT)

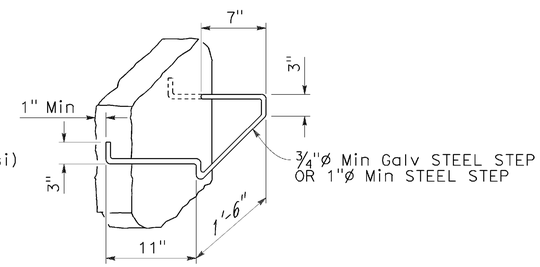

BAR STEP

STEP DETAILS

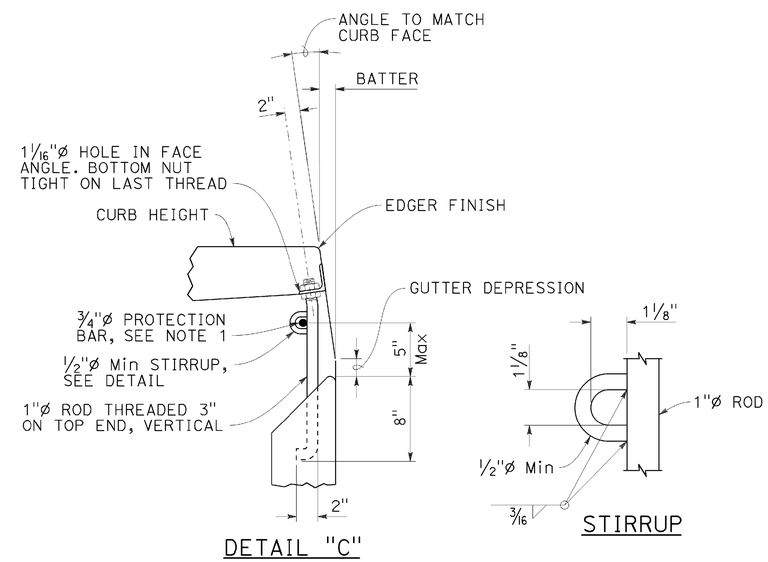

DETAIL "C"

STIRRUP

CURB SUPPORT

CURB SUPPORTS SHALL BE EVENLY SPACED AND MINIMAL IN NUMBER SUCH THAT MAXIMUM SPAN OF UNSUPPORTED CURB IS 7'-0".

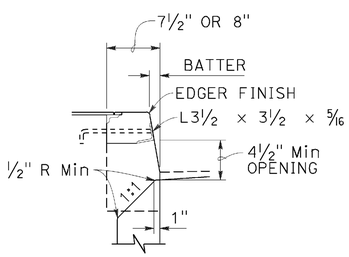

TYPE A CURBS

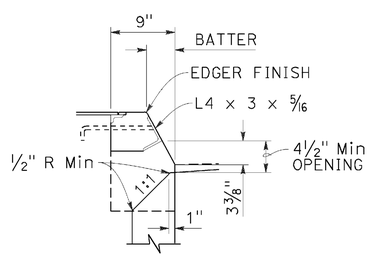

TYPE B CURBS

CURB OPENING DETAILS

STATE OF CALIFORNIA
DEPARTMENT OF TRANSPORTATION

DRAINAGE INLET DETAILS

NO SCALE

RSP D74 DATED JULY 15, 2016 SUPPLEMENTS THE STANDARD PLANS BOOK DATED 2010.

REVISED STANDARD PLAN RSP D74

DATE PLOTTED => 28-JUL-2016
TIME PLOTTED => 14:15

Dist	COUNTY	ROUTE	POST MILES TOTAL PROJECT	SHEET No.	TOTAL SHEETS
02	Las, Sie,Las	70, 395	3.5/3.9 R0.0/R3.1,R0.0/R5.6	188	236

Raymond Don Tsztoo
REGISTERED CIVIL ENGINEER

April 19, 2013
PLANS APPROVAL DATE

REGISTERED PROFESSIONAL ENGINEER Raymond Don Tsztoo No. C37332 Exp. 6-30-14 CIVIL STATE OF CALIFORNIA

THE STATE OF CALIFORNIA OR ITS OFFICERS OR AGENTS SHALL NOT BE RESPONSIBLE FOR THE ACCURACY OR COMPLETENESS OF SCANNED COPIES OF THIS PLAN SHEET.

TO ACCOMPANY PLANS DATED 06-15-16

2010 REVISED STANDARD PLAN RSP D77A

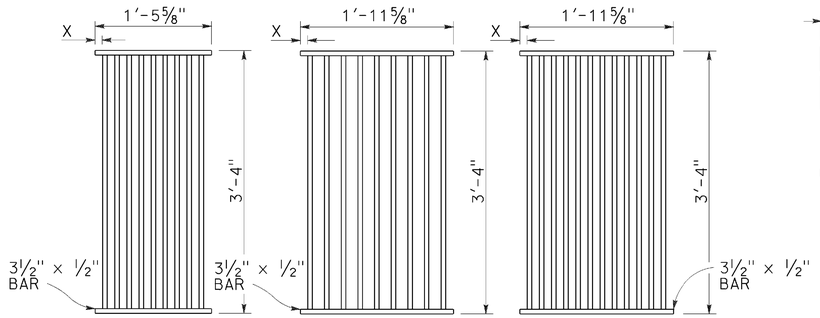

TYPE 18-9

1⅜" Clear spacing. Use within the roadbed on highways where bicycles and pedestrians are excluded.

TYPE 24-9

2" Clear spacing. Use in locations off the roadbed on all types of highways.

TYPE 24-12

1⅜" Clear spacing. Use within the roadbed on highways where bicycles and pedestrians are excluded.

RECTANGULAR GRATE DETAILS

(See table below)

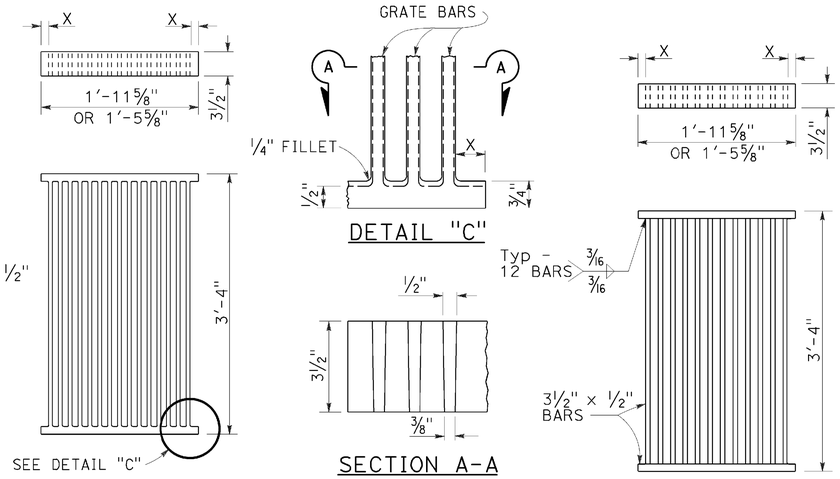

ALTERNATIVE CAST DUCTILE IRON GRATE OR CAST CARBON STEEL GRATE

ALTERNATIVE WELDED GRATE

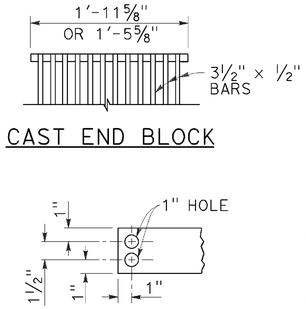

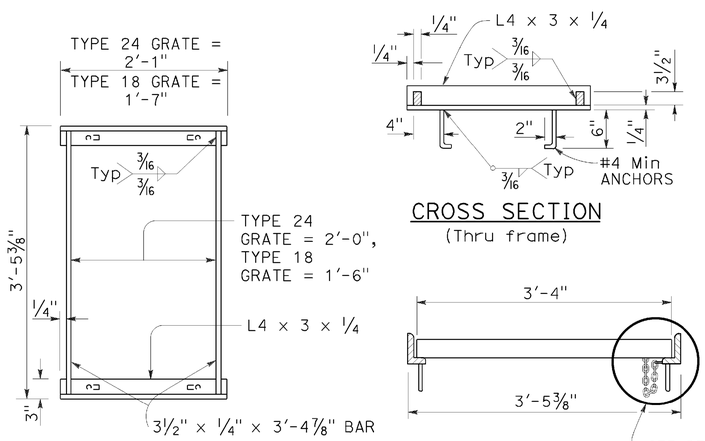

RECTANGULAR FRAME DETAILS

(For all rectangular grates)

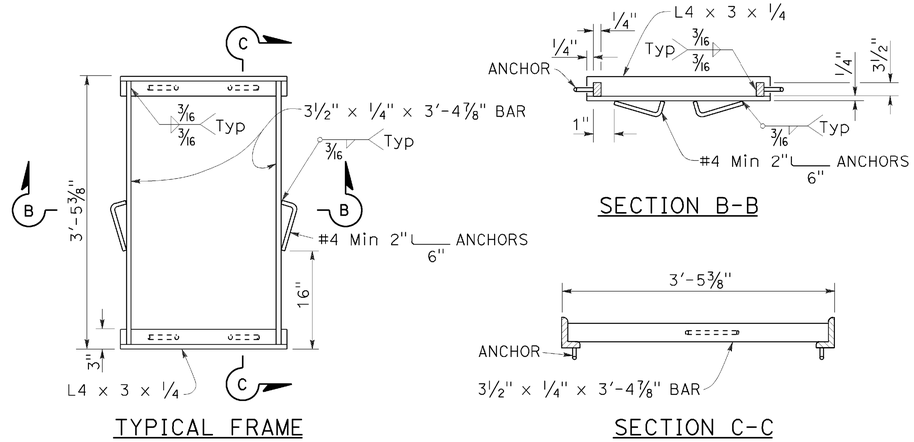

ALTERNATIVE ANCHOR FOR RECTANGULAR FRAME

(For details not shown, See Rectangular Frame Details)

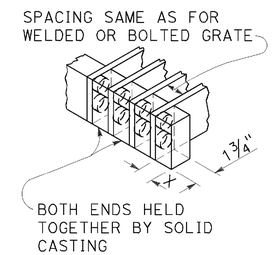

ALTERNATIVE CAST DUCTILE IRON OR CAST CARBON STEEL END BLOCK GRATE

NOTES:

1. Grate type numbers refer to approximate width of grate in inches and number of bars, respectively.
2. Contractor has the option of using cast ductile iron, cast carbon steel, welded, bolted, or cast end block grate.
3. Rounded top of bars optional on all grates.
4. Pipe inlets with a grate shall be placed so that bars parallel direction of principle surface flow.
5. Complete joint penetration butt welds may be substituted for the fillet welds on all anchors.
6. Standard square, hexagon, round or equivalent headed anchors may be substituted for the right angle hooks on the anchors shown on this plan.
7. Grate and frame weights are based on welded grates (weights of face angles, steps, protection bars, etc. are not included).
8. Connect chain to grate and frame only at locations shown on the plans. When chain is required, do not use cast ductile iron grates.

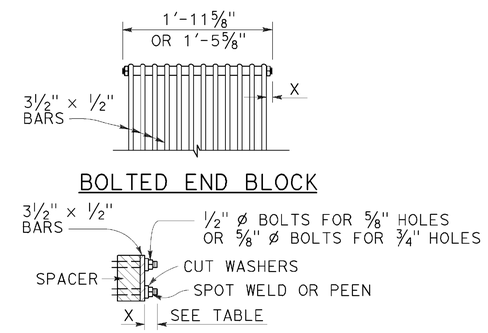

ALTERNATIVE BOLTED GRATE

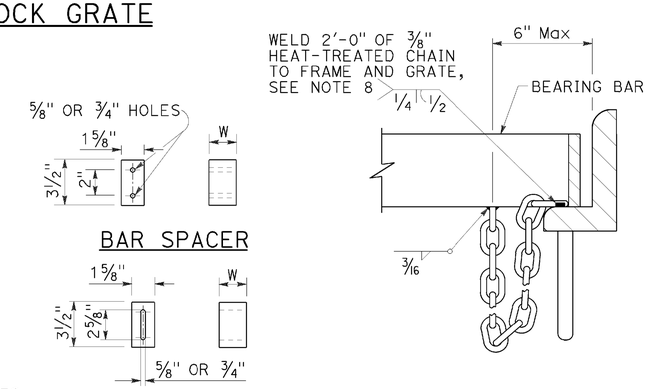

GRATE BAR SPACING TABLE

TYPE	No. OF BARS	CLEAR BAR SPACING	X
18-9	9	1⅜"	1 1/16"
24-9	9	2"	1 9/16"
24-12	12	1⅜"	1¼"

INLET TYPE	COVER TYPE	WEIGHT LB
OS	PLATE	174
OL-7	PLATE	170
OL-10	PLATE	170
OL-14	PLATE	170
OL-21	PLATE	170
OCP	PLATE	112
OCPI	PLATE	112
OCPI	REDWOOD	42
OMP	PLATE	177
OMPI	PLATE	177

INLET TYPE	GRATE TYPE	No. OF GRATES	WEIGHT LB
GDO	24-12	2	634
GOL-7	24-12	1	326
GOL-10	24-12	1	326
GO,G1,G2,G3,G4 (TYPE 24)	24-9	1	263
	24-12	1	326
G4 (TYPE 18),G5,G6	18-9	1	249
GT1	18-9	2	498
GT2	18-9	2	498
GT3	24-12	2	652
GT4	24-12	2	652
TRASH RACK			22
GRATE CHAIN			3

BASIS FOR Misc IRON & STEEL FINAL PAY WEIGHTS FOR DRAINAGE INLETS

(See Note 7)

STATE OF CALIFORNIA
DEPARTMENT OF TRANSPORTATION

GRATE DETAILS No. 1

NO SCALE

RSP D77A DATED APRIL 19, 2013 SUPERSEDES RSP D77A DATED JULY 20, 2012 AND STANDARD PLAN D77A DATED MAY 20, 2011 - PAGE 164 OF THE STANDARD PLANS BOOK DATED 2010.

REVISED STANDARD PLAN RSP D77A

DATE PLOTTED => 28-JUL-2016
TIME PLOTTED => 14:16

Dist	COUNTY	ROUTE	POST MILES TOTAL PROJECT	SHEET No.	TOTAL SHEETS
02	Las, Sie,Las	70, 395	3.5/3.9 R0.0/R3.1,R0.0/R5.6	189	236

Raymond Don Tsztoo
REGISTERED CIVIL ENGINEER

April 19, 2013
PLANS APPROVAL DATE

REGISTERED PROFESSIONAL ENGINEER Raymond Don Tsztoo No. C37332 Exp. 6-30-14 CIVIL STATE OF CALIFORNIA

THE STATE OF CALIFORNIA OR ITS OFFICERS OR AGENTS SHALL NOT BE RESPONSIBLE FOR THE ACCURACY OR COMPLETENESS OF SCANNED COPIES OF THIS PLAN SHEET.

TO ACCOMPANY PLANS DATED 06-15-16

2010 REVISED STANDARD PLAN RSP D77B

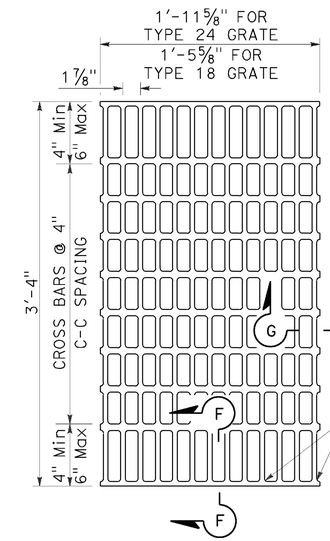

NOTES:

Bearing bars to be 3½" × ¼" bars on 1⅞" centers.

⅜"± ø Cross bars may be fillet welded, resistance welded or electroforged to bearing bars.

Weight of Type 24 grate = 141 LBS.

Weight of Type 18 grate = 107 LBS. (Type 24 grate shown).

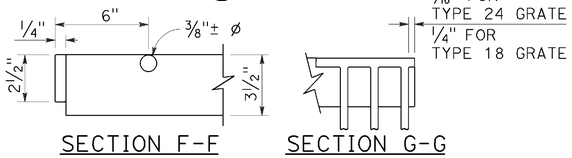

SECTION F-F SECTION G-G

TYPE 18-10 AND 24-13 GRATE

(Welded Steel)

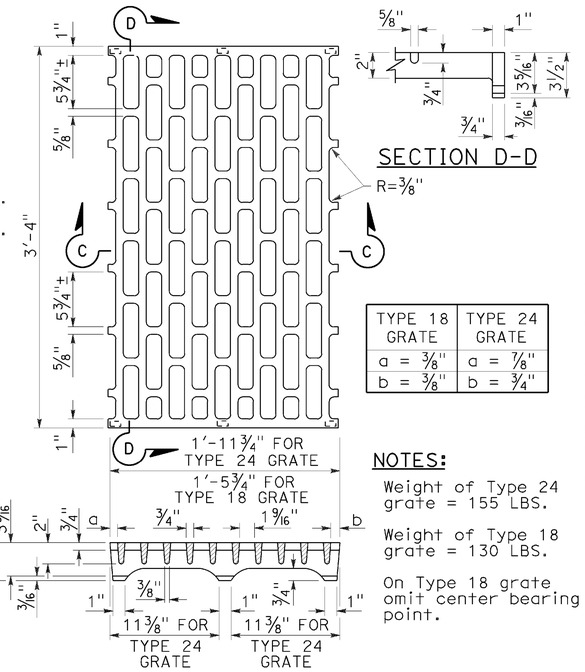

TYPE 18 GRATE	TYPE 24 GRATE
a = ⅜"	a = ⅞"
b = ⅜"	b = ¾"

SECTION D-D

NOTES:

Weight of Type 24 grate = 155 LBS.

Weight of Type 18 grate = 130 LBS.

On Type 18 grate omit center bearing point.

SECTION C-C

TYPE 18-8C AND 24-10C GRATE

(Cast ductile iron)

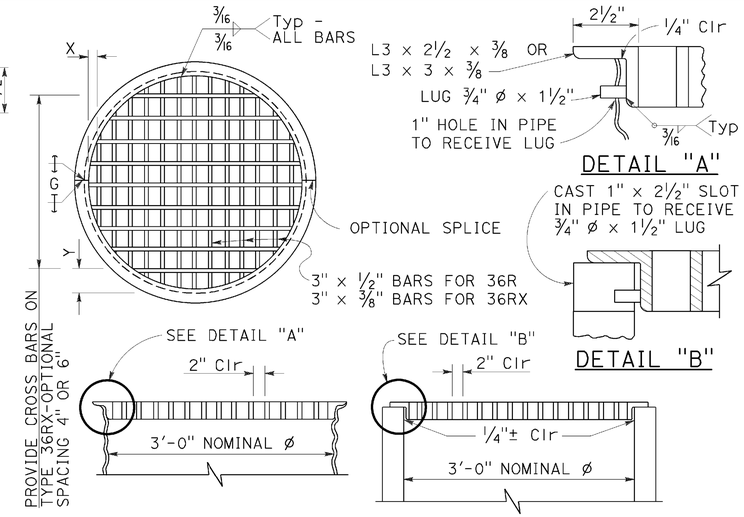

TYPE 36R AND 36RX GRATE DETAILS

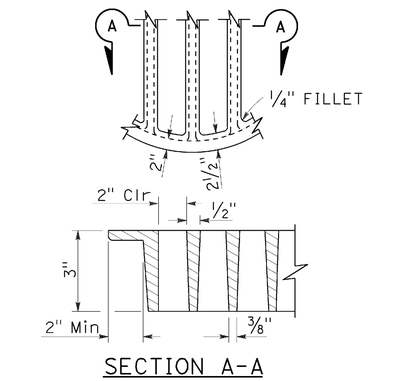

SECTION A-A

ALTERNATIVE CAST DUCTILE IRON GRATE OR CAST CARBON STEEL GRATE TYPE 36R AND 36RX

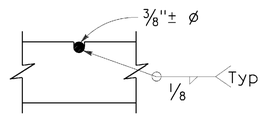

⅜"± ø Cross bars may be fillet welded, resistance welded or electroforged to bearing bars.

CROSS BAR DETAIL TYPE 36RX GRATE (WELDED STEEL)

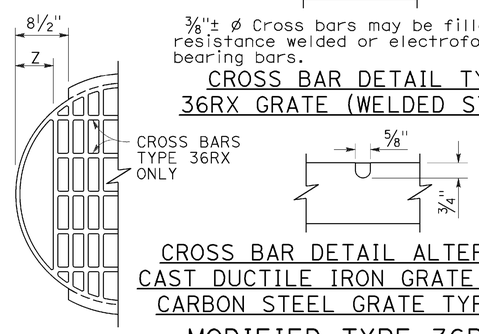

CROSS BAR DETAIL ALTERNATIVE CAST DUCTILE IRON GRATE OR CAST CARBON STEEL GRATE TYPE 36RX

MODIFIED TYPE 36R AND 36RX GRATE FOR ODI INLET

NOTES:

1. When alternative grates are allowed - Final pay based on alternative with the lesser weight.
2. Use frame shown on Standard Plan D74A, D74B or RSP D77A as appropriate.
3. When Type 24-10S, 24-12X or 24-13 grates are used with GDO Inlets, a ¼" × 3½" × 3'-4⅞" steel bar shall be welded across the center of inlet frame to separate the individual grates.
4. See Revised Standard Plan RSP D77A for connecting chain to welded grate and frame. When chain is required, do not use cast ductile iron grate.

BASIS FOR Misc IRON AND STEEL FINAL PAY WEIGHTS FOR DRAINAGE INLETS

INLET TYPE	GRATE TYPE	No. OF GRATES	WEIGHT LB
GDO (SEE NOTE 4)	24-10C	2	391
	24-10S	2	456
	24-12X	2	473
	24-13	2	374
GO,GOL,G1,G2, G3,G4 (TYPE 24)	24-10C	1	202
	24-10S	1	229
	24-12X	1	239
	24-13	1	188
G4 (TYPE 18) G5,G6	18-8S	1	187
	18-9X	1	187
	18-10	1	149
GT1,GT2	18-8S	2	374
	18-9X	2	374
	18-10	2	298
GT3,GT4	24-10C	2	404
	24-10S	2	458
	24-12X	2	478
	24-13	2	376
ODI	36RX (Mod)	1	196
GMP,GCP,GCPI	36RX	1	215
ODI	36R (Mod)	1	220
GMP,GCP,GCPI	36R	1	236
TRASH RACK			22
GRATE CHAIN			3

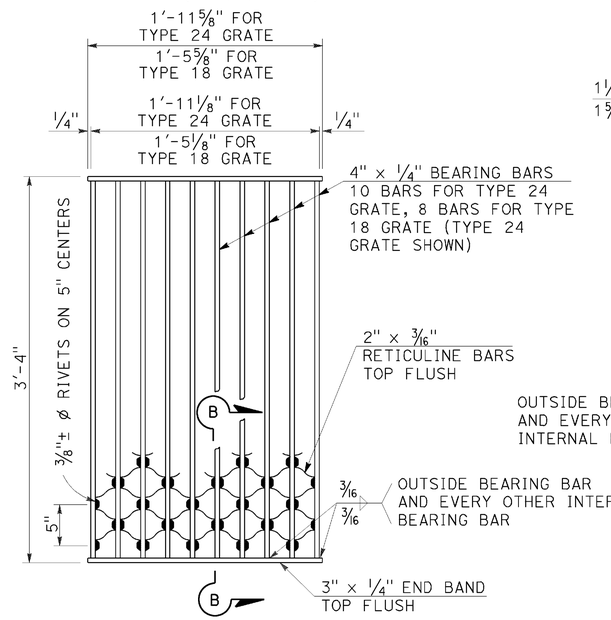

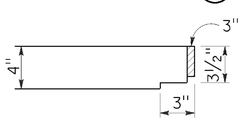

NOTES:

Weight of Type 24 grate = 182 LBS.
Weight of Type 18 grate = 145 LBS.

SECTION B-B

TYPE 18-8S AND 24-10S GRATE

(Welded Steel) Reticuline type

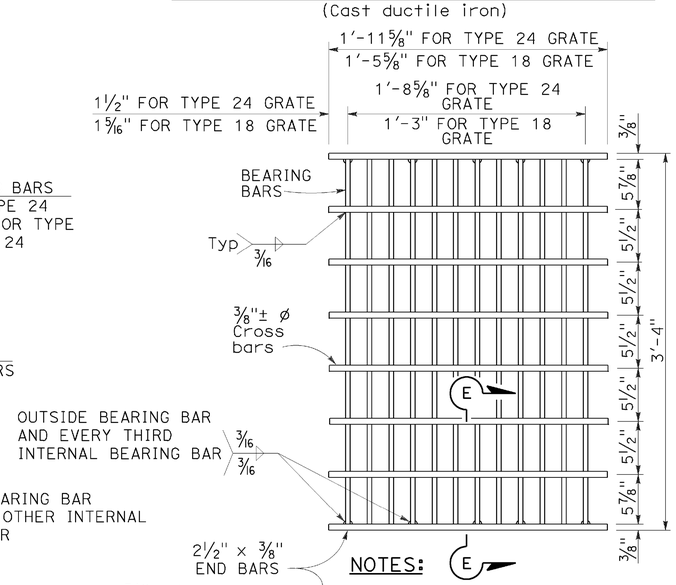

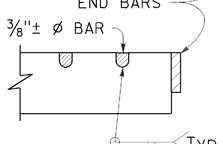

SECTION E-E

NOTES:

Bearing bars to be 3½" × ⅜" bars on 1⅞" centers.

12 Bars for Type 24 grate - 9 bars for Type 18 grates. (Type 24 grate shown).

Weight of Type 24 grate = 192 LBS.

Weight of Type 18 grate = 145 LBS.

⅜"± ø Cross bars may be fillet welded, resistance welded or electroforged to bearing bars.

TYPE 18-9X AND 24-12X GRATE

(Welded Steel)

GRATE BAR SPACING TABLE

TYPE	No. OF BARS	CLEAR BAR SPACING	X	Y 4" SPACING	Y 6" SPACING	Z
36R	13	2"	2⅛"	-	-	-
36RX (STEEL)	15	2"	9/16"	3¾"	5¾"	-
36RX (CAST)	13	2"	2⅛"	3¾"	5¾"	-
36R Mod	12	2"	2⅛"	-	-	5"
36RX Mod (STEEL)	13	2"	9/16"	3¾"	5¾"	5 11/16"
36RX Mod (CAST)	12	2"	2⅛"	3¾"	5¾"	5"

STATE OF CALIFORNIA
DEPARTMENT OF TRANSPORTATION

GRATE DETAILS No. 2

NO SCALE

RSP D77B DATED APRIL 19, 2013 SUPERSEDES RSP D77B DATED JULY 20, 2012 AND STANDARD PLAN D77B DATED MAY 20, 2011 - PAGE 165 OF THE STANDARD PLANS BOOK DATED 2010.

REVISED STANDARD PLAN RSP D77B

DATE PLOTTED => 28-JUL-2016
TIME PLOTTED => 14:16

Dist	COUNTY	ROUTE	POST MILES TOTAL PROJECT	SHEET No.	TOTAL SHEETS
02	Las, Sie,Las	70, 395	3.5/3.9 R0.0/R3.1,R0.0/R5.6	190	236

Raymond Don Tsztoo
REGISTERED CIVIL ENGINEER

October 30, 2015
PLANS APPROVAL DATE

REGISTERED PROFESSIONAL ENGINEER
Raymond Don Tsztoo
No. C37332
Exp. 6-30-16
CIVIL
STATE OF CALIFORNIA

THE STATE OF CALIFORNIA OR ITS OFFICERS OR AGENTS SHALL NOT BE RESPONSIBLE FOR THE ACCURACY OR COMPLETENESS OF SCANNED COPIES OF THIS PLAN SHEET.

TO ACCOMPANY PLANS DATED 06-15-16

ANNULAR AND HELICAL PROFILE

COUPLING TYPE	PIPE CORRUGATION	PIPE SIZE	W OR A	PIPE WALL THICKNESS CSP	PIPE WALL THICKNESS CAP	BAND THICKNESS CSP	BAND THICKNESS CAP	BAR AND STRAP (CSP ONLY) STRAP THICKNESS	BOLTS Dia	BAR Dia	BAR YIELD STRENGTH	ANGLE DIMENSIONS CSP	ANGLE DIMENSIONS CAP	BOLTS (No.- Dia) CSP	BOLTS (No.- Dia) CAP	RIVETS ANGLE TO BAND CSP	RIVETS ANGLE TO BAND CAP	SPOT WELDS ANGLE TO BAND CSP
TWO PIECE INTEGRAL FLANGE	1½′ × ¼″	6″	7″	0.064″-0.168″		0.052″								3-⅜″				
	1½′ × ¼″	8″-10″	7″	0.064″-0.168″	0.060″-0.164″	0.064″	0.060″							3-⅜″	3-⅜″			
ANNULAR	2⅔″ × ½″	THROUGH 24″	12″	0.064″-0.168″	0.060″-0.164″	0.064″	0.060″					2″ × 2″ × 3/16″	2″ × 2″ × 3/16″	3-½″	3-½″	3-⅜″	3-⅜″	3-½″
HUGGER	2⅔″ × ½″ REROLLED END	THROUGH 24″	10½″	0.064″-0.168″		0.064″		0.079″	½″	⅞″	32 ksi							

SPIRAL RIB PROFILE

COUPLING TYPE	PIPE CORRUGATION	PIPE SIZE	W	PIPE WALL THICKNESS SSRP	PIPE WALL THICKNESS ASRP	BAND THICKNESS SSRP	BAND THICKNESS ASRP	BAR AND STRAP (SSRP ONLY) STRAP THICKNESS	BOLTS Dia	BAR Dia	BAR YIELD STRENGTH	ANGLE DIMENSIONS SSRP	ANGLE DIMENSIONS ASRP	BOLTS (No.- Dia) SSRP	BOLTS (No.- Dia) ASRP	RIVETS ANGLE TO BAND SSRP	RIVETS ANGLE TO BAND ASRP	SPOT WELDS ANGLE TO BAND SSRP
ANNULAR	2⅔″ × ½″ * REROLLED END	24″	12″	0.064″-0.168″	0.060″-0.164″	0.064″	0.060″					2″ × 2″ × 3/16″	2″ × 2″ × 3/16″	3-½″	3-½″	3-⅜″	3-⅜″	3-½″
HUGGER	2⅔″ × ½″ * REROLLED END	24″	10½″	0.064″-0.168″		0.064″		0.079″	½″	⅞″	32 ksi							

* See Note 11.

11. All profiles of Spiral Rib Pipe (¾″ × ¾″ ribs at 7½″ pitch and ¾″ × 1″ ribs at 11½″ pitch in both steel and aluminum and ¾″ × 1″ ribs at 8½″ pitch in steel only) shall be manufactured with rerolled ends. Corrugation profile of the rerolled ends shall be 2⅔″ × ½″ annual corrugations with a minimum of two full corrugations at each end.

NOTES:

1. For helically corrugated coupling bands, the connection angles may be oriented parallel to the pipe axis, provided connecting holes are slotted lengthwise sufficiently to allow adjustment for the helix angle.
2. Tension strap may be connected to band with either spot welds or fillet welds that develop minimum required strength of strap.
3. Use 1¼″ gage line dimension on attached angle leg for rivets and spot welds.
4. Band thickness shall not be less than:
   a. 3 standard thicknesses lighter than the thickness of the pipe for Corrugated Steel Pipe.
   b. 2 standard thicknesses lighter than the thickness of the pipe and in no case lighter than 0.060″ for Corrugated Aluminum Pipe.
5. Dimensions, thicknesses and strengths shown are minimum.
6. For pipe arches use same width band as for round pipe of equal periphery.
7. Fillet welds of equivalent strength may be substituted for spot welds or rivets.
8. Spot welds shall develop minimum required strength of strap.
9. Pipe with rerolled ends having at least two 2⅔″ × ½″ annular corrugations at each end with or without an upturned flange may be connected with any of the annular coupling bands shown for pipe of the same diameter and wall thickness and having 2⅔″ × ½″ corrugations.
10. For downdrain applications, two piece integral flange couplers shall have factory applied sleeve type rubber gaskets with a minimum length of 7″ measured along the length of the pipe.

STATE OF CALIFORNIA
DEPARTMENT OF TRANSPORTATION

CORRUGATED METAL PIPE COUPLING DETAILS No. 7 DOWNDRAIN

NO SCALE

RSP D97G DATED OCTOBER 30, 2015 SUPERSEDES STANDARD PLAN D97G DATED MAY 20, 2011 - PAGE 202 OF THE STANDARD PLANS BOOK DATED 2010.

REVISED STANDARD PLAN RSP D97G

2010 REVISED STANDARD PLAN RSP D97G

DATE PLOTTED => 28-JUL-2016
TIME PLOTTED => 14:16

Dist	COUNTY	ROUTE	POST MILES TOTAL PROJECT	SHEET No.	TOTAL SHEETS
02	Las, Sie,Las	70, 395	3.5/3.9 R0.0/R3.1,R0.0/R5.6	191	236

Gregory A. Balzer
LICENSED LANDSCAPE ARCHITECT

July 19, 2013
PLANS APPROVAL DATE

THE STATE OF CALIFORNIA OR ITS OFFICERS OR AGENTS SHALL NOT BE RESPONSIBLE FOR THE ACCURACY OR COMPLETENESS OF SCANNED COPIES OF THIS PLAN SHEET.

LICENSED LANDSCAPE ARCHITECT — Gregory A. Balzer 2576 — 02-28-15 Renewal Date — 7-19-13 Date — STATE OF CALIFORNIA

TO ACCOMPANY PLANS DATED 06-15-16

2010 REVISED STANDARD PLAN RSP H1

A

AB	AGGREGATE BASE
ABS	ACRYLONITRILE-BUTADIENE-STYRENE
AC	ASPHALT CONCRETE
ACC	ARMOR-CLAD CONDUCTORS
Adj	ADJACENT/ADJUSTABLE
AIC	AUXILIARY IRRIGATION CONTROLLER
Alt	ALTERNATIVE
AMEND	AMENDMENT
ARV	AIR RELEASE VALVE
AUTO	AUTOMATIC
AUX	AUXILIARY
AVB	ATMOSPHERIC VACUUM BREAKER

B

B&B	BALLED AND BURLAPPED
B/B	BRASS/BRONZE
B/B/PL	BRASS/BRONZE/PLASTIC
B/PL	BRASS/PLASTIC
BFM	BONDED FIBER MATRIX
Bit Ctd	BITUMINOUS COATED
BP	BOOSTER PUMP
BPA	BACKFLOW PREVENTER ASSEMBLY
BPE	BACKFLOW PREVENTER ENCLOSURE
BV	BALL VALVE

C

C	CONDUIT
CAP	CORRUGATED ALUMINUM PIPE
CARV	COMBINATION AIR RELEASE VALVE
CB	COUPLING BAND
CCA	CAM COUPLER ASSEMBLY
CEC	CONTROLLER ENCLOSURE CABINET
CHDPE	CORRUGATED HIGH DENSITY POLYETHYLENE
CL	CHAIN LINK
CNC	CONTROL AND NEUTRAL CONDUCTORS
Conc	CONCRETE
CP	COPPER PIPE
CS	COMPOST SOCK
CSP	CORRUGATED STEEL PIPE
CST	CENTER STRIP
CV	CHECK VALVE

D

Dia	DIAMETER
DIP	DUCTILE IRON PIPE
DIT	DRIP IRRIGATION TUBING
DG	DECOMPOSED GRANITE
DN	DIAMETER NOMINAL
DVA	DRIP VALVE ASSEMBLY

E

EC	EROSION CONTROL
ECTC	EROSION CONTROL TECHNOLOGY COUNCIL
Elect	ELECTRIC/ELECTRICAL
Elev	ELEVATION
ELL	ELBOW
ENCL	ENCLOSURE
EP	EDGE OF PAVEMENT
ES	EDGE OF SHOULDER
EST	END STRIP
ESTB	ESTABLISHMENT
ETW	EDGE OF TRAVELED WAY

F

F	FULL CIRCLE
F/P	FULL/PART CIRCLE
FCV	FLOW CONTROL VALVE
FERT	FERTILIZER
FG	FINISHED GRADE
FH	FLEXIBLE HOSE
FIPT	FEMALE IRON PIPE THREAD
FIS	FERTILIZER INJECTOR SYSTEM
FL	FLOW LINE
FR	FIBER ROLL
FS	FLOW SENSOR
FSC	FLOW SENSOR CABLE
FV	FLUSH VALVE

G

Galv	GALVANIZED
GARV	GARDEN VALVE
GARVA	GARDEN VALVE ASSEMBLY
GM	GRAVEL MULCH
GPH	GALLONS PER HOUR
GPM	GALLONS PER MINUTE
GSP	GALVANIZED STEEL PIPE
GV	GATE VALVE

H

H	HALF CIRCLE
HDPE	HIGH DENSITY POLYETHYLENE
HP	HORSEPOWER/HINGE POINT
HPL	HIGH PRESSURE LINE
Hwy	HIGHWAY

I

IC	IRRIGATION CONTROLLER
ICC	IRRIGATION CONTROLLER(S) IN CONTROLLER ENCLOSURE CABINET
ID	INSIDE DIAMETER
IFS	IRRIGATION FILTRATION SYSTEM
IPS	IRON PIPE SIZE
IPT	IRON PIPE THREAD
Irr	IRRIGATION

L

L	LENGTH

M

Max	MAXIMUM
MBGR	METAL BEAM GUARD RAILING
MCV	MANUAL CONTROL VALVE
MIC	MASTER IRRIGATION CONTROLLER
Min	MINIMUM
MIPT	MALE IRON PIPE THREAD
Misc	MISCELLANEOUS
Mtl	MATERIAL
MVP	MAINTENANCE VEHICLE PULLOUT

N

NCN	NO COMMON NAME
NL	NOZZLE LINE
No.	NUMBER
NPT	NATIONAL PIPE THREAD

O

O/C	ON CENTER
OD	OUTSIDE DIAMETER
OL	OVERLAP

P

P	PART CIRCLE
PB	PULL BOX
PCC	PORTLAND CEMENT CONCRETE
PE	POLYETHYLENE
Pkt	PACKET
PL	PLASTIC
PLS	PURE LIVE SEED
PLT	PLANT/PLANTING
PLT ESTB	PLANT ESTABLISHMENT
PM	POST MILE
PR	PRESSURE RATED
PRLV	PRESSURE RELIEF VALVE
PRV	PRESSURE REGULATING VALVE
PVC	POLYVINYL CHLORIDE
Pvmt	PAVEMENT

Q

Q	QUARTER CIRCLE
QCV	QUICK COUPLING VALVE

R

R	RADIUS
RCP	REINFORCED CONCRETE PIPE
RCV	REMOTE CONTROL VALVE
RCVM	REMOTE CONTROL VALVE (MASTER)
RCVMF	REMOTE CONTROL VALVE (MASTER) W/FLOW SENSOR
RCVP	REMOTE CONTROL VALVE W/PRESSURE REGULATOR
RCW	RECYCLED WATER
RECP	ROLLED EROSION CONTROL PRODUCT
REQ	REQUIRED
RICS	REMOTE IRRIGATION CONTROL SYSTEM
R/W	RIGHT OF WAY

S

S	SLIP
SCH	SCHEDULE
SF	STATE-FURNISHED
Shld	SHOULDER
Sq	SQUARE
SST	SIDE STRIP
Sta	STATION
Std	STANDARD
SW	SIDEWALK/SOUND WALL

T

T	THIRD CIRCLE/THREAD
TLS	TRUCK LOADING STANDPIPE
TQ	THREE QUARTER CIRCLE
TRM	TURF REINFORCEMENT MAT
TT	TWO-THIRDS CIRCLE
TWSA	TREE WELL SPRINKLER ASSEMBLY
Typ	TYPICAL

U

UG	UNDERGROUND

W

W	WIDTH
W/	WITH
WM	WATER METER
WS	WYE STRAINER
WSA	WYE STRAINER ASSEMBLY
WSP	WELDED STEEL PIPE
WWM	WELDED WIRE MESH

NOTE:

For additional abbreviations, see Standard Plans A10A and A10B.

STATE OF CALIFORNIA
DEPARTMENT OF TRANSPORTATION

LANDSCAPE AND EROSION CONTROL ABBREVIATIONS

NO SCALE

RSP H1 DATED JULY 19, 2013 SUPERSEDES STANDARD PLAN H1 DATED MAY 20, 2011 - PAGE 218 OF THE STANDARD PLANS BOOK DATED 2010.

REVISED STANDARD PLAN RSP H1

DATE PLOTTED => 28-JUL-2016
TIME PLOTTED => 14:17

Dist	COUNTY	ROUTE	POST MILES TOTAL PROJECT	SHEET No.	TOTAL SHEETS
02	Las, Sie,Las	70, 395	3.5/3.9 R0.0/R3.1,R0.0/R5.6	192	236

LICENSED LANDSCAPE ARCHITECT

July 15, 2016
PLANS APPROVAL DATE

LICENSED LANDSCAPE ARCHITECT
Michael V. Ferrara 3859
9-30-17
Renewal Date
Date
STATE OF CALIFORNIA

THE STATE OF CALIFORNIA OR ITS OFFICERS OR AGENTS SHALL NOT BE RESPONSIBLE FOR THE ACCURACY OR COMPLETENESS OF SCANNED COPIES OF THIS PLAN SHEET.

TO ACCOMPANY PLANS DATED 06-15-16

EXISTING	NEW	ITEM DESCRIPTION
		WATER METER (WM)
		BACKFLOW PREVENTER ASSEMBLY (BPA)
		BACKFLOW PREVENTER ENCLOSURE (BPE)
		BOOSTER PUMP (BP)
		TRUCK LOADING STANDPIPE (TLS)
	FS	FLOW SENSOR (FS)
X	X	MASTER IRRIGATION CONTROLLER (MIC)
		AUXILIARY IRRIGATION CONTROLLER (AIC)
		IRRIGATION CONTROLLER (IC) IRRIGATION CONTROLLER (IC) (BATTERY) IRRIGATION CONTROLLER (IC) (SOLAR) IRRIGATION CONTROLLER (IC) (TWO WIRE)
		IRRIGATION CONTROLLER(S) IN CONTROLLER ENCLOSURE CABINET (ICC)
ACC	ACC	ARMOR-CLAD CONDUCTORS (ACC)
		CONTROL AND NEUTRAL CONDUCTORS (CNC)
		IRRIGATION CONDUIT
		IRRIGATION SLEEVE
dip	DIP	DUCTILE IRON PIPE (SUPPLY LINE) (MAIN) (DIP)
		GALVANIZED STEEL PIPE (SUPPLY LINE) (MAIN) (GSP)
		GALVANIZED STEEL PIPE (SUPPLY LINE) (LATERAL) (GSP)
		PLASTIC PIPE (SUPPLY LINE) (MAIN)
		PLASTIC PIPE (SUPPLY LINE) (LATERAL)
cp	CP	COPPER PIPE (SUPPLY LINE)
dit	DIT	DRIP IRRIGATION TUBING
		REMOTE CONTROL VALVE (RCV) REMOTE CONTROL VALVE (MASTER) (RCVM) REMOTE CONTROL VALVE (MASTER) W/FLOW METER (RCVMF)
P	P	REMOTE CONTROL VALVE W/PRESSURE REGULATOR (RCVP)
		EXISTING MANUAL CONTROL VALVE (MCV)
	V	DRIP VALVE ASSEMBLY (DVA)
	Y	WYE STRAINER ASSEMBLY (WSA)

EXISTING	NEW	ITEM DESCRIPTION
		GATE VALVE (GV)
		BALL VALVE (BV)
		QUICK COUPLING VALVE (QCV)
		CAM COUPLER ASSEMBLY (CCA)
		GARDEN VALVE ASSEMBLY (GARVA)
		PRESSURE REGULATING VALVE (PRV)
		PRESSURE RELIEF VALVE (PRLV)
		FLOW CONTROL VALVE (FCV)
		COMBINATION AIR RELEASE VALVE (CARV)
		CHECK VALVE (CV)
		FLUSH VALVE (FV)
		EXISTING NOZZLE LINE W/TURNING UNION
		EXISTING IRRIGATION SYSTEM
		EXISTING IRRIGATION SYSTEM TO BE REMOVED
		CHAIN LINK GATE
		QUICK COUPLING VALVE W/SPRINKLER PROTECTOR
3	3	SPRINKLER W/SPRINKLER PROTECTOR
	C	CONNECT TO EXISTING SYSTEM
		CAP
		CAP EXISTING
	\\\FR\\\	FIBER ROLL
	\\\CS\\\	COMPOST SOCK

RCV SIZE
IRRIGATION CONTROLLER
CONTROLLER STATION
VALVE IN PARALLEL (IF APPLICABLE)
GPM
QUANTITY OF SPRINKLERS (WHEN SHOWN)

* 2½"-A-2b-40-60

VALVE CODE

* VALVE CODES FOR EXISTING VALVES ARE SHOWN IN A DASHED ENCLOSURE.

STATE OF CALIFORNIA
DEPARTMENT OF TRANSPORTATION

LANDSCAPE AND EROSION CONTROL SYMBOLS

NO SCALE

RSP H2 DATED JULY 15, 2016 SUPERSEDES RSP H2 DATED NOVEMBER 15, 2013 AND RSP H2 DATED JULY 19, 2013 AND STANDARD PLAN H2 DATED MAY 20, 2011 - PAGE 219 OF THE STANDARD PLANS BOOK DATED 2010.

REVISED STANDARD PLAN RSP H2

2010 REVISED STANDARD PLAN RSP H2

DATE PLOTTED => 28-JUL-2016
TIME PLOTTED => 14:17

Dist	COUNTY	ROUTE	POST MILES TOTAL PROJECT	SHEET No.	TOTAL SHEETS
02	Las, Sie,Las	70, 395	3.5/3.9 R0.0/R3.1,R0.0/R5.6	193	236

Gregory A. Balzer
LICENSED LANDSCAPE ARCHITECT

July 19, 2013
PLANS APPROVAL DATE

LICENSED LANDSCAPE ARCHITECT
Gregory A. Balzer 2516
Gregory A. Balzer
06-30-15
2-28-15
Renewal Date
7-19-13
Date
STATE OF CALIFORNIA

THE STATE OF CALIFORNIA OR ITS OFFICERS OR AGENTS SHALL NOT BE RESPONSIBLE FOR THE ACCURACY OR COMPLETENESS OF SCANNED COPIES OF THIS PLAN SHEET.

TO ACCOMPANY PLANS DATED 06-15-16

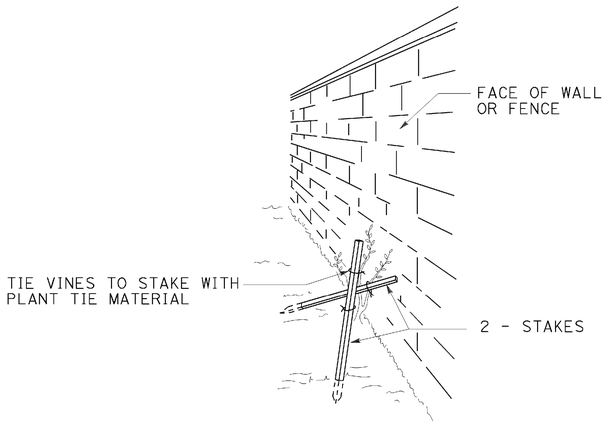

PERSPECTIVE
VINE STAKING

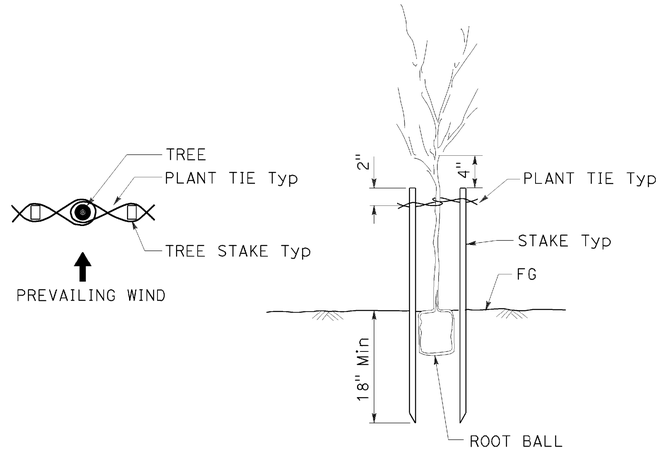

TREE STAKING

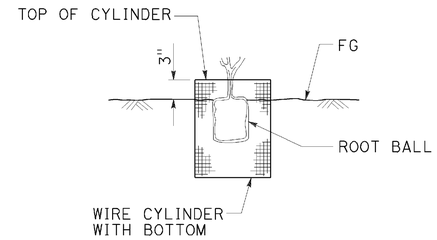

SECTION
ROOT PROTECTOR

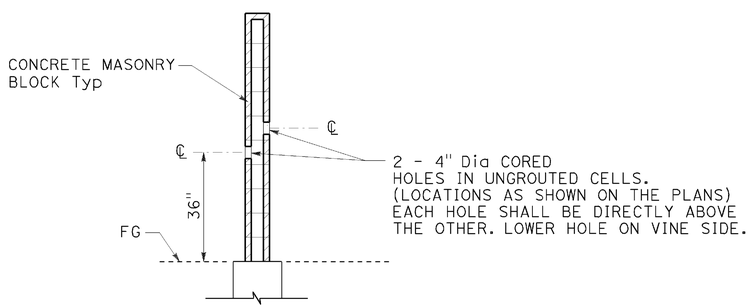

SECTION
CORE HOLE (VINE)

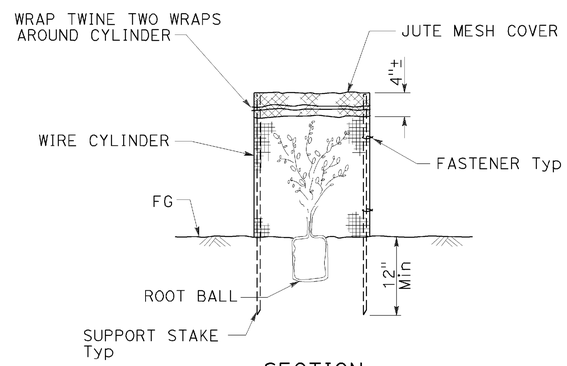

SECTION
FOLIAGE PROTECTOR

STATE OF CALIFORNIA
DEPARTMENT OF TRANSPORTATION

LANDSCAPE DETAILS

NO SCALE

RSP H4 DATED JULY 19, 2013 SUPERSEDES STANDARD PLAN H4
DATED MAY 20, 2011 - PAGE 221 OF THE STANDARD PLANS BOOK DATED 2010.

REVISED STANDARD PLAN RSP H4

2010 REVISED STANDARD PLAN RSP H4

DATE PLOTTED => 28-JUL-2016
TIME PLOTTED => 14:18

Dist	COUNTY	ROUTE	POST MILES TOTAL PROJECT	SHEET No.	TOTAL SHEETS
02	Las, Sie,Las	70, 395	3.5/3.9 R0.0/R3.1,R0.0/R5.6	194	236

LICENSED LANDSCAPE ARCHITECT

July 15, 2016
PLANS APPROVAL DATE

LICENSED LANDSCAPE ARCHITECT
Micael V. Ferrara 3859
Expiration
9-30-17
Renewal Date
Date
STATE OF CALIFORNIA

THE STATE OF CALIFORNIA OR ITS OFFICERS OR AGENTS SHALL NOT BE RESPONSIBLE FOR THE ACCURACY OR COMPLETENESS OF SCANNED COPIES OF THIS PLAN SHEET.

TO ACCOMPANY PLANS DATED 06-15-16

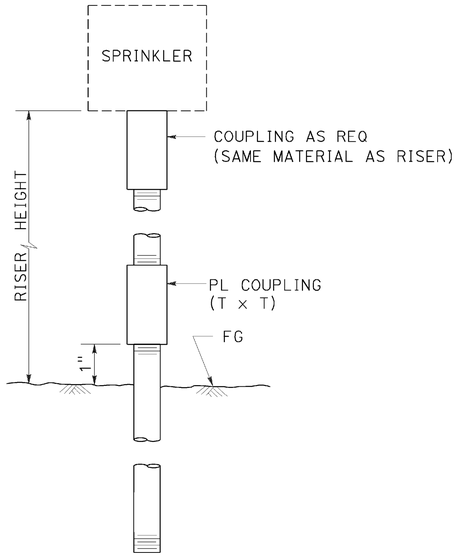

ELEVATION

RISER TYPE I

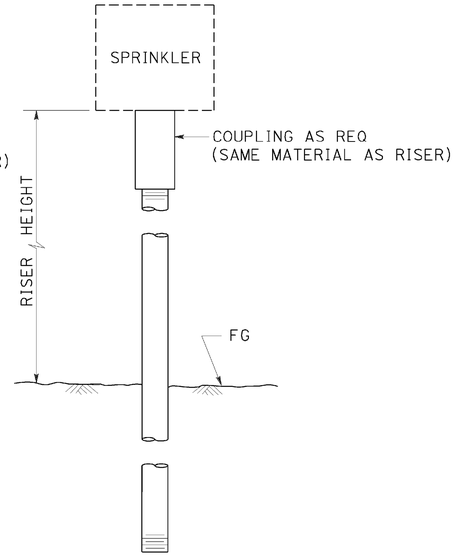

ELEVATION

RISER TYPE II

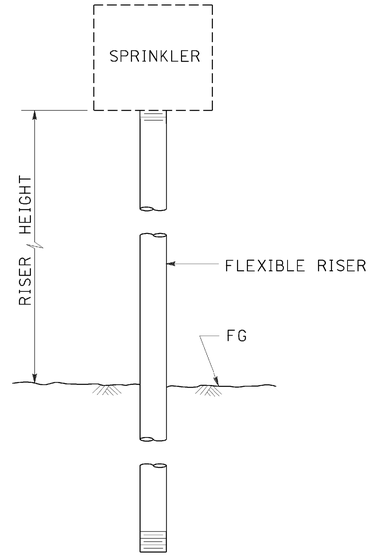

ELEVATION

RISER TYPE III

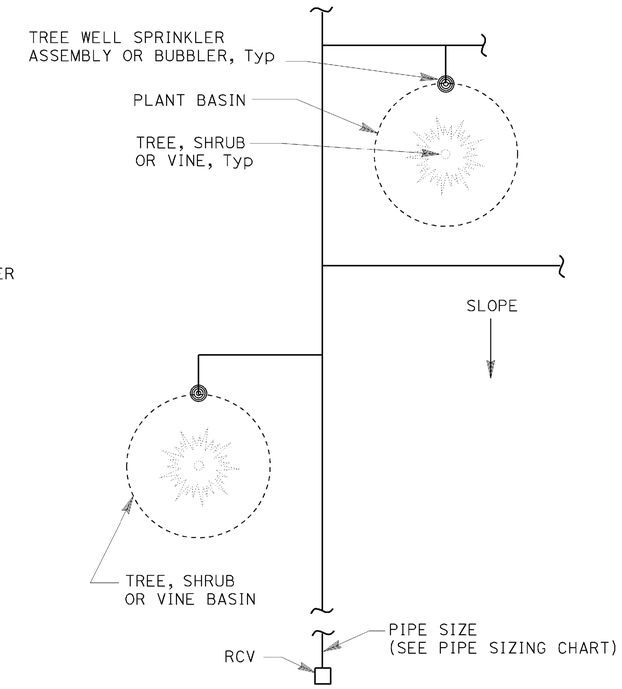

PLAN

NOTES:

1. Install tree well sprinkler assembly on up-hill side of plant when on slope.
2. Install bubbler within basin.

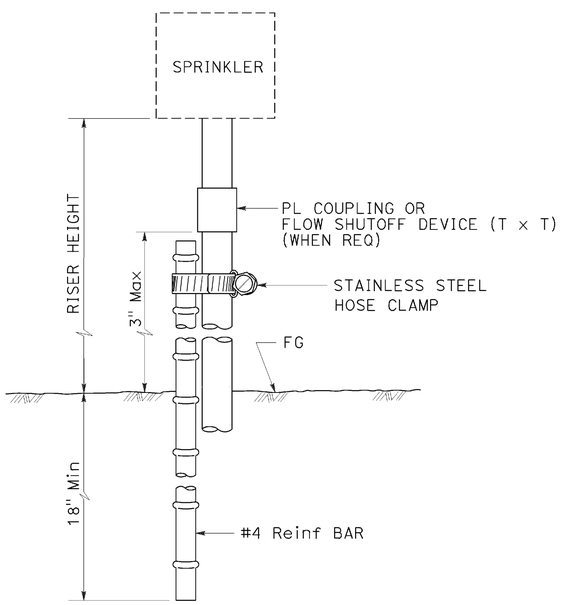

ELEVATION

RISER TYPE IV

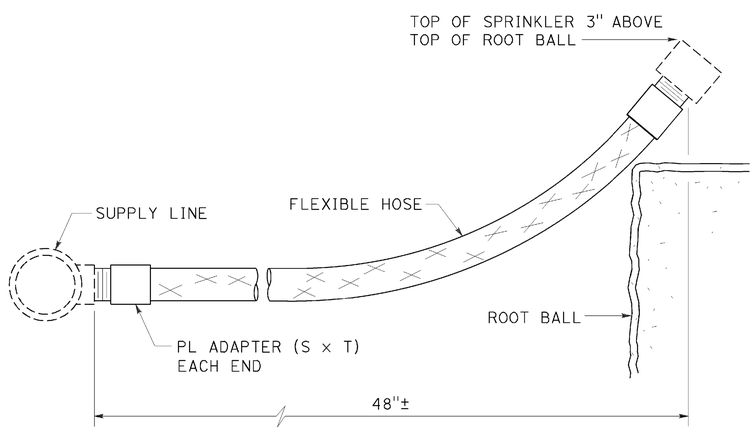

ELEVATION

RISER TYPE V

PLAN

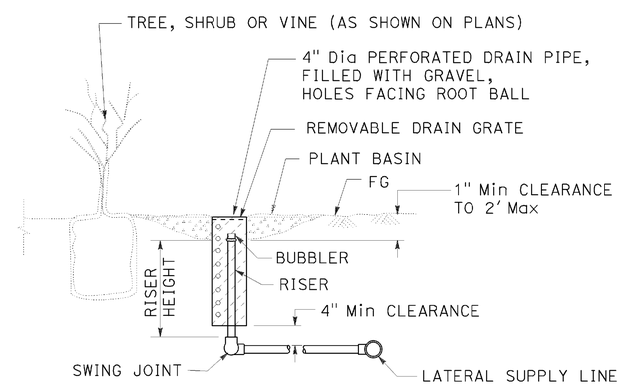

SECTION

TREE WELL SPRINKLER ASSEMBLY

STATE OF CALIFORNIA
DEPARTMENT OF TRANSPORTATION

LANDSCAPE DETAILS (RISER SPRINKLER ASSEMBLY)

NO SCALE

RSP H5 DATED JULY 15, 2016 SUPERSEDES RSP H5 DATED JULY 19, 2013 AND STANDARD PLAN H5 DATED MAY 20, 2011 - PAGE 222 OF THE STANDARD PLANS BOOK DATED 2010.

REVISED STANDARD PLAN RSP H5

2010 REVISED STANDARD PLAN RSP H5

DATE PLOTTED => 28-JUL-2016
TIME PLOTTED => 14:18

Dist	COUNTY	ROUTE	POST MILES TOTAL PROJECT	SHEET No.	TOTAL SHEETS
02	Las, Sie,Las	70, 395	3.5/3.9 R0.0/R3.1,R0.0/R5.6	195	236

LICENSED LANDSCAPE ARCHITECT

July 15, 2016
PLANS APPROVAL DATE

LICENSED LANDSCAPE ARCHITECT
Michael V. Ferrara 3589
9-30-17
Renewal Date
Date
STATE OF CALIFORNIA

THE STATE OF CALIFORNIA OR ITS OFFICERS OR AGENTS SHALL NOT BE RESPONSIBLE FOR THE ACCURACY OR COMPLETENESS OF SCANNED COPIES OF THIS PLAN SHEET.

TO ACCOMPANY PLANS DATED 06-15-16

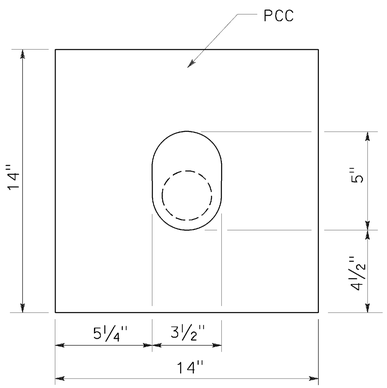

PLAN

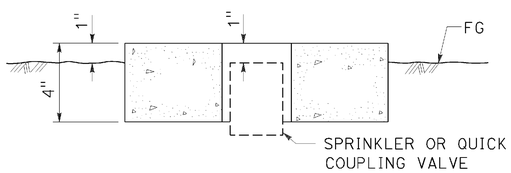

SECTION

SPRINKLER PROTECTOR TYPE I

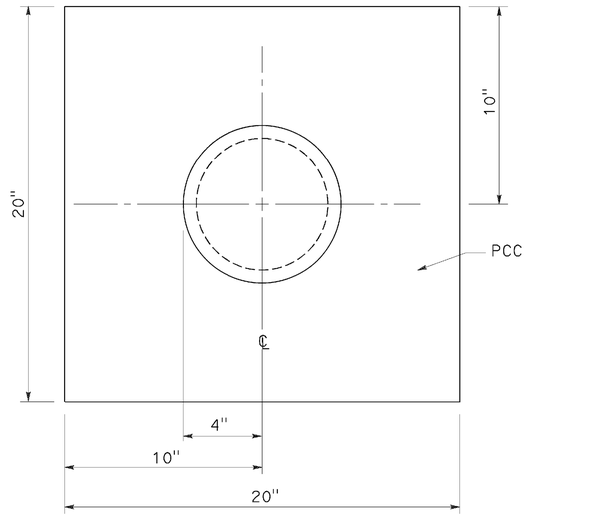

PLAN

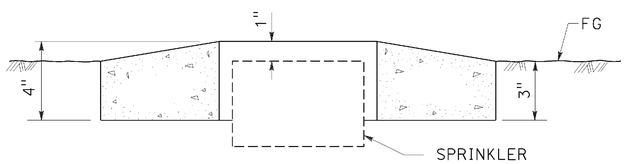

SECTION

SPRINKLER PROTECTOR TYPE II

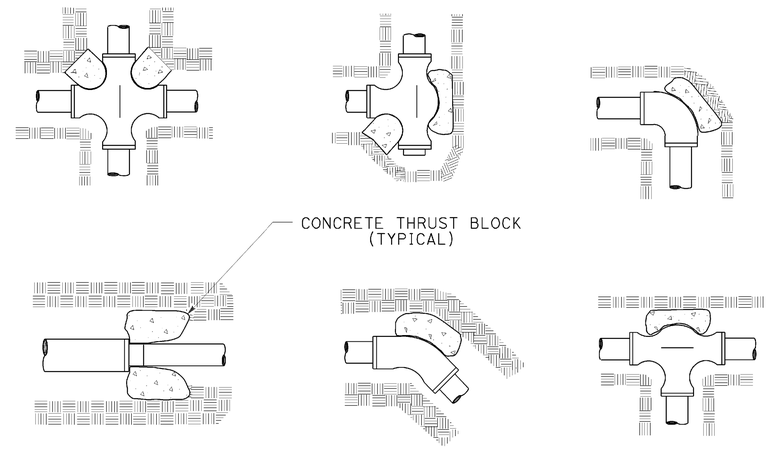

TYPICAL THRUST BLOCKS

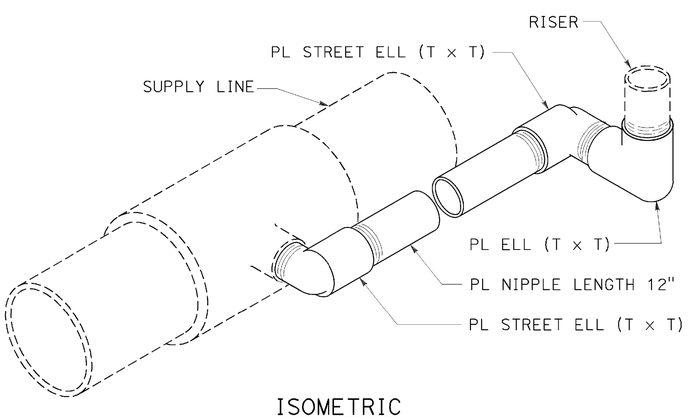

ISOMETRIC

SWING JOINT TYPE I

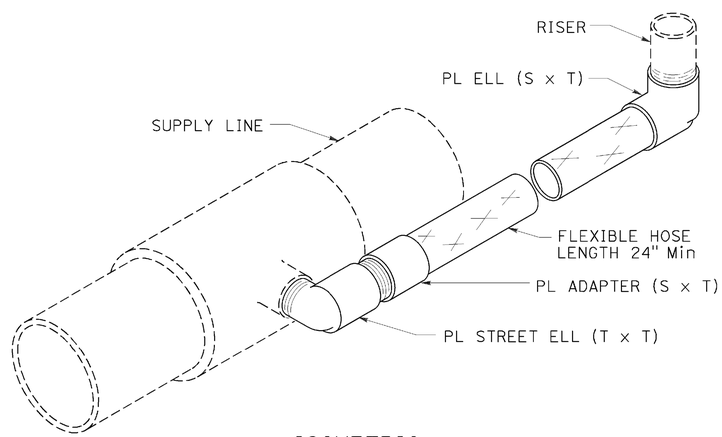

ISOMETRIC

SWING JOINT TYPE II

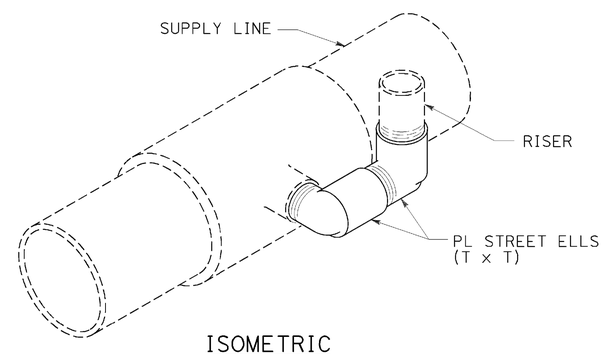

ISOMETRIC

SWING JOINT TYPE III

STATE OF CALIFORNIA
DEPARTMENT OF TRANSPORTATION

LANDSCAPE DETAILS (SWING JOINT AND PROTECTOR)

NO SCALE

RSP H6 DATED JULY 15, 2016 SUPERSEDES RSP H6 DATED JULY 19, 2013 AND STANDARD PLAN H6 DATED MAY 20, 2011 - PAGE 223 OF THE STANDARD PLANS BOOK DATED 2010.

REVISED STANDARD PLAN RSP H6

2010 REVISED STANDARD PLAN RSP H6

DATE PLOTTED => 28-JUL-2016
TIME PLOTTED => 14:18

Dist	COUNTY	ROUTE	POST MILES TOTAL PROJECT	SHEET No.	TOTAL SHEETS
02	Las, Sie,Las	70, 395	3.5/3.9 R0.0/R3.1,R0.0/R5.6	196	236

LICENSED LANDSCAPE ARCHITECT

July 19, 2013
PLANS APPROVAL DATE

THE STATE OF CALIFORNIA OR ITS OFFICERS OR AGENTS SHALL NOT BE RESPONSIBLE FOR THE ACCURACY OR COMPLETENESS OF SCANNED COPIES OF THIS PLAN SHEET.

LICENSED LANDSCAPE ARCHITECT — Gregory A. Balzer 2576 — 02-28-15 Renewal Date — 7-19-13 Date — STATE OF CALIFORNIA

TO ACCOMPANY PLANS DATED 06-15-16

2010 REVISED STANDARD PLAN RSP H7

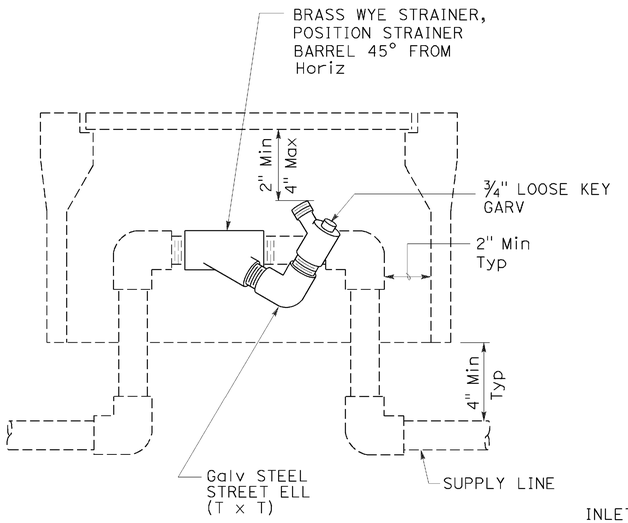

ELEVATION
WYE STRAINER ASSEMBLY

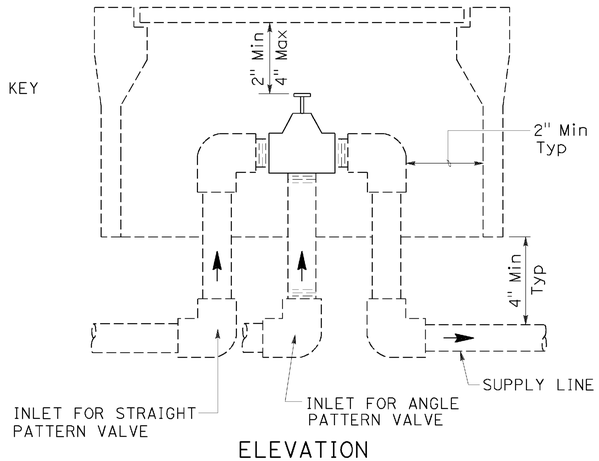

ELEVATION
VALVE

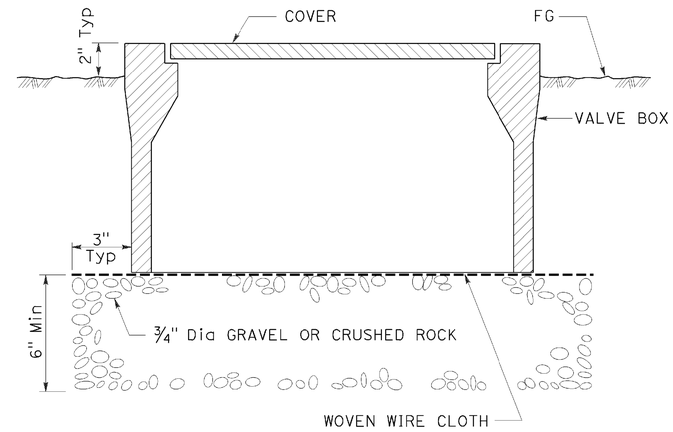

SECTION
VALVE BOX

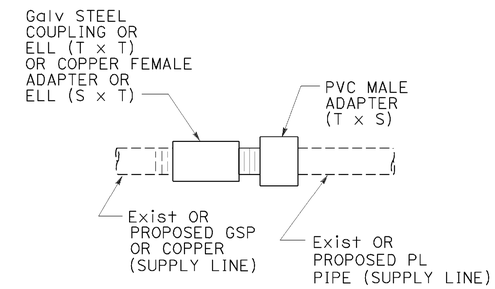

GALVANIZED OR COPPER PIPE CONNECTION TO PLASTIC PIPE

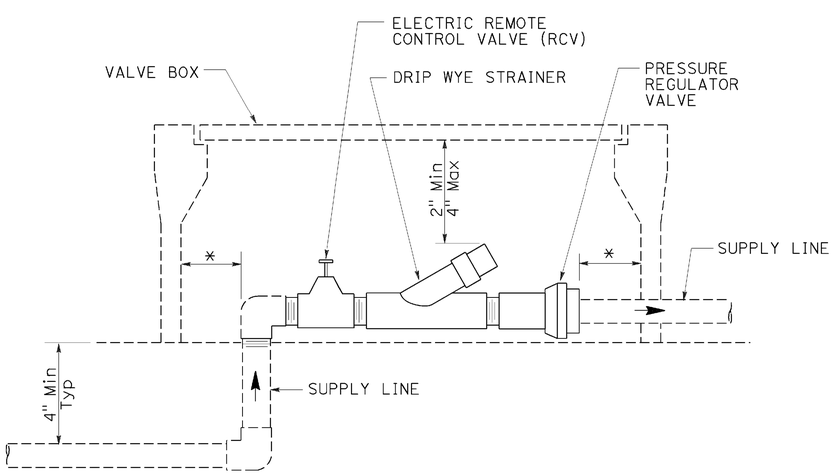

* 2" CLEARANCE ON ALL SIDES

ELEVATION
DRIP VALVE ASSEMBLY

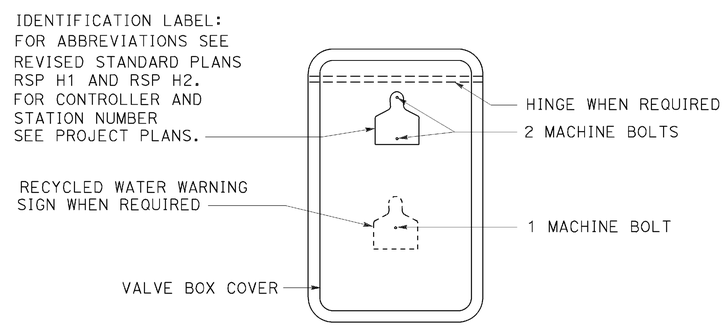

PLAN

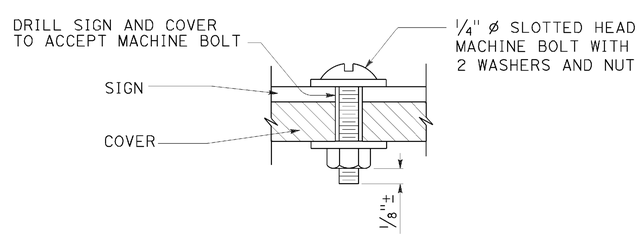

SECTION
VALVE BOX IDENTIFICATION

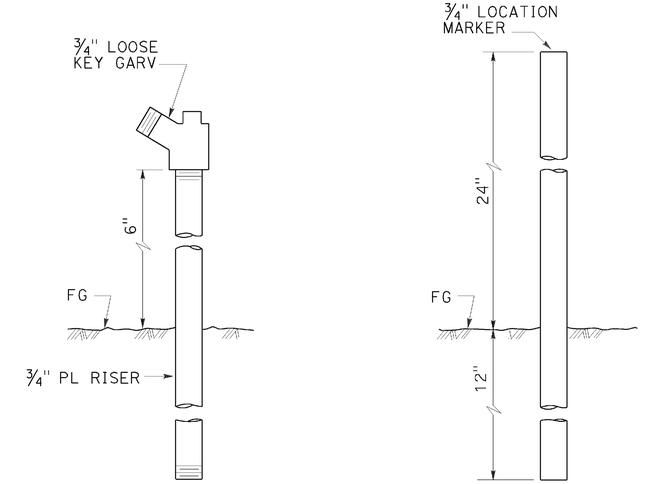

ELEVATION
GARDEN VALVE ASSEMBLY

ELEVATION
LOCATION MARKER

GARDEN VALVE ASSEMBLY

STATE OF CALIFORNIA
DEPARTMENT OF TRANSPORTATION

LANDSCAPE DETAILS

NO SCALE

RSP H7 DATED JULY 19, 2013 SUPERSEDES STANDARD PLAN H7
DATED MAY 20, 2011 - PAGE 224 OF THE STANDARD PLANS BOOK DATED 2010.

REVISED STANDARD PLAN RSP H7

DATE PLOTTED => 28-JUL-2016
TIME PLOTTED => 14:19

Dist	COUNTY	ROUTE	POST MILES TOTAL PROJECT	SHEET No.	TOTAL SHEETS
02	Las, Sie,Las	70, 395	3.5/3.9 R0.0/R3.1,R0.0/R5.6	197	236

LICENSED LANDSCAPE ARCHITECT

October 30, 2015
PLANS APPROVAL DATE

LICENSED LANDSCAPE ARCHITECT — Michael V. Ferrara 3869 — Expires 9-30-17 Renewal Date — Date — STATE OF CALIFORNIA

THE STATE OF CALIFORNIA OR ITS OFFICERS OR AGENTS SHALL NOT BE RESPONSIBLE FOR THE ACCURACY OR COMPLETENESS OF SCANNED COPIES OF THIS PLAN SHEET.

TO ACCOMPANY PLANS DATED 06-15-16

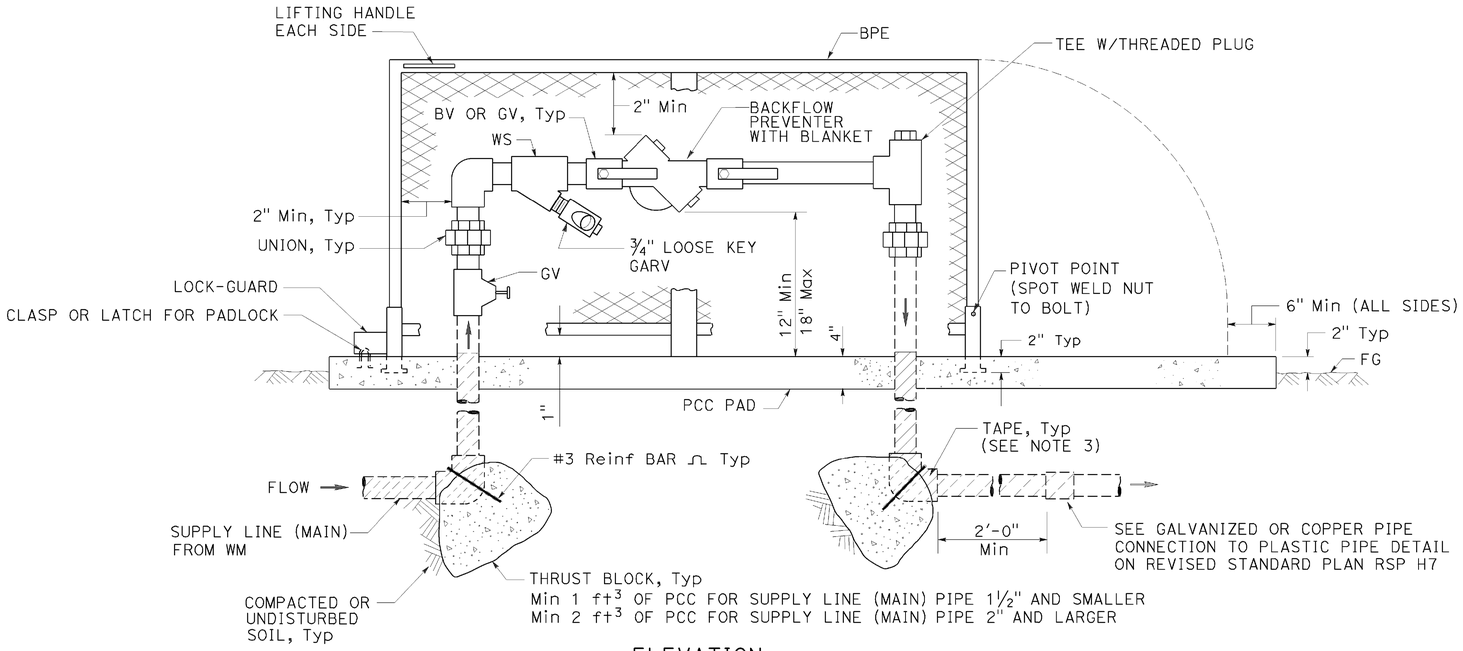

ELEVATION

BACKFLOW PREVENTER ASSEMBLY

IN ONE PIECE ENCLOSURE

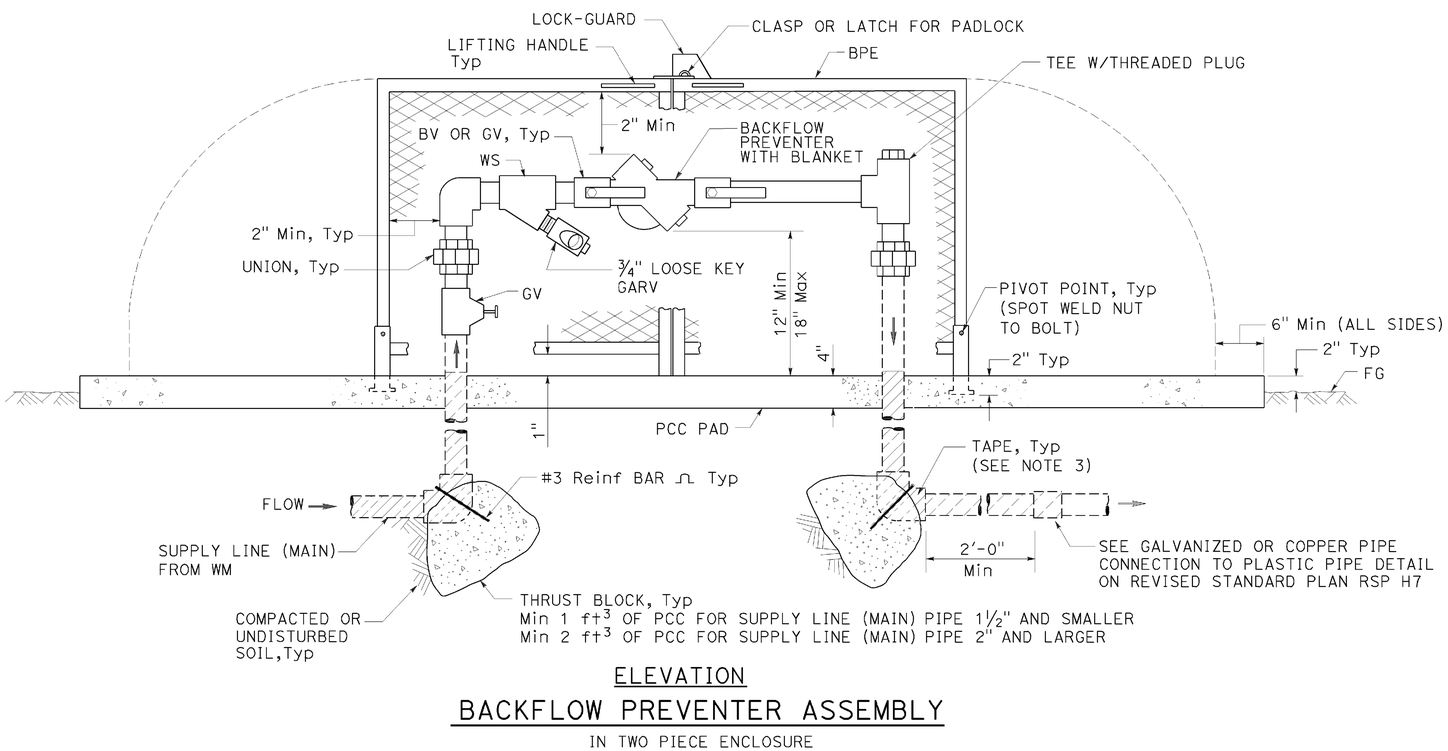

ELEVATION

BACKFLOW PREVENTER ASSEMBLY

IN TWO PIECE ENCLOSURE

NOTES:

1. Wye strainer and fittings must be the same size as the backflow preventer shown on the plans.
2. Backflow preventer assembly manifold pipe must be the same pipe as the supply line (main) pipe to be installed from the water meter to the backflow preventer assembly.
3. All metal in contact with soil and Portland Cement Concrete must be wrapped with 2" wide plastic backed adhesive polyethylene tape 20 mil thick with ½" overlap.

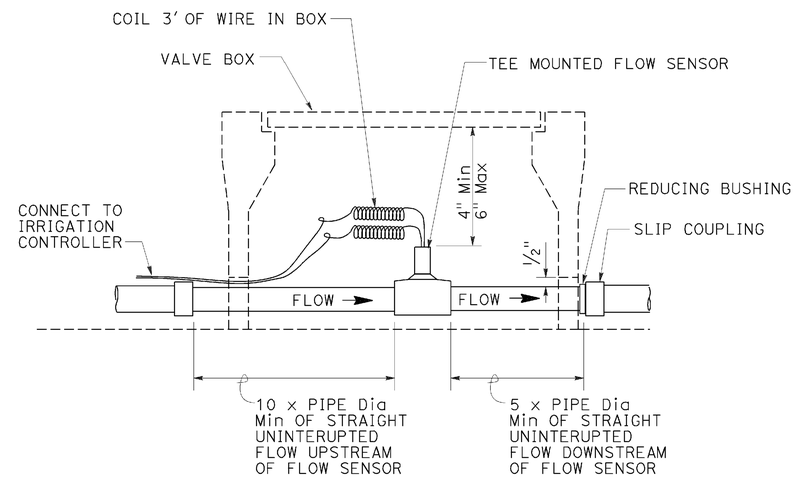

SECTION

FLOW SENSOR

STATE OF CALIFORNIA
DEPARTMENT OF TRANSPORTATION

LANDSCAPE DETAILS

NO SCALE

RSP H8 DATED OCTOBER 30, 2015 SUPERSEDES RSP H8 DATED JULY 19, 2013 AND STANDARD PLAN H8 DATED MAY 20, 2011 - PAGE 225 OF THE STANDARD PLANS BOOK DATED 2010.

REVISED STANDARD PLAN RSP H8

2010 REVISED STANDARD PLAN RSP H8

DATE PLOTTED => 28-JUL-2016
TIME PLOTTED => 14:19

Dist	COUNTY	ROUTE	POST MILES TOTAL PROJECT	SHEET No.	TOTAL SHEETS
02	Las, Sie,Las	70, 395	3.5/3.9 R0.0/R3.1,R0.0/R5.6	198	236

LICENSED LANDSCAPE ARCHITECT

April 15, 2016
PLANS APPROVAL DATE

LICENSED LANDSCAPE ARCHITECT
Michael V. Ferrara 3859
Licensed Landscape Architect
9-30-17
Renewal Date
Date
STATE OF CALIFORNIA

THE STATE OF CALIFORNIA OR ITS OFFICERS OR AGENTS SHALL NOT BE RESPONSIBLE FOR THE ACCURACY OR COMPLETENESS OF SCANNED COPIES OF THIS PLAN SHEET.

TO ACCOMPANY PLANS DATED 06-15-16

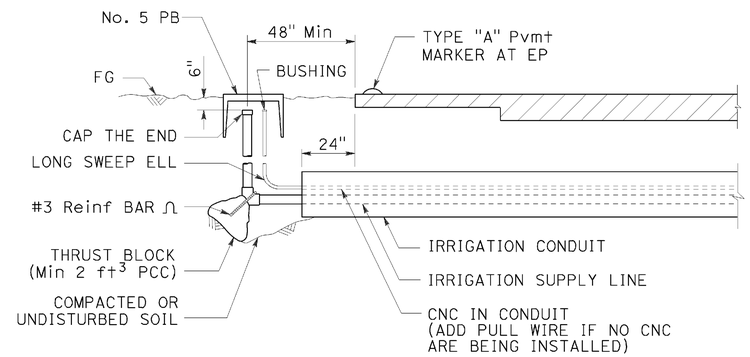

SECTION

IRRIGATION CONDUIT

UNDER TRAVELED WAY

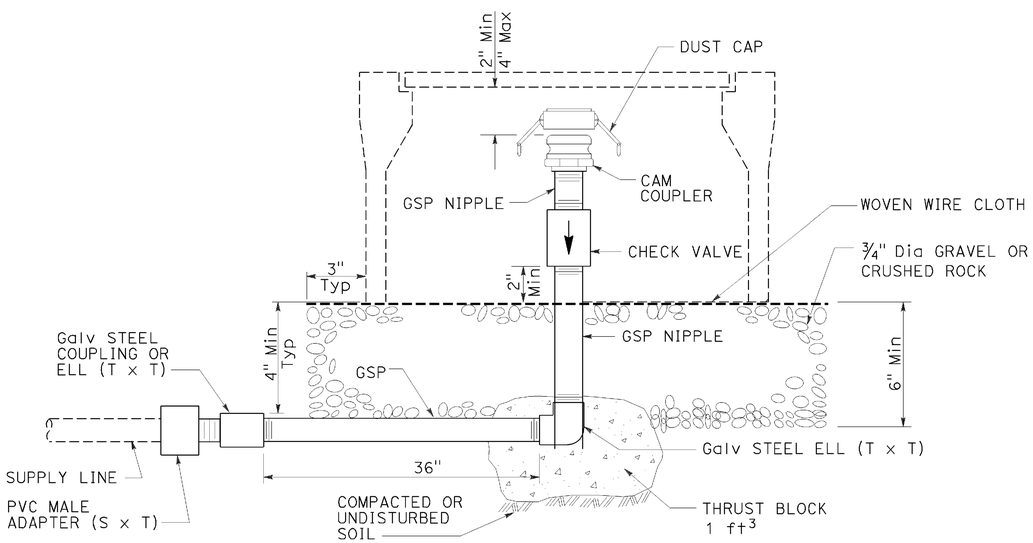

ELEVATION

CAM COUPLER ASSEMBLY

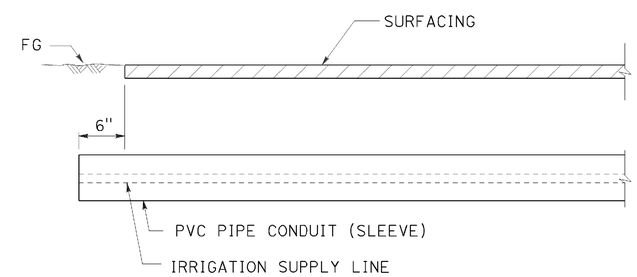

SECTION

PVC PIPE CONDUIT (SLEEVE)

UNDER SIDEWALKS, DRIVEWAYS AND PATHS

STATE OF CALIFORNIA
DEPARTMENT OF TRANSPORTATION

LANDSCAPE DETAILS

NO SCALE

RSP H9 DATED APRIL 15, 2016 SUPERSEDES RSP H9 DATED JULY 19, 2013 AND STANDARD PLAN H9 DATED MAY 20, 2011 - PAGE 226 OF THE STANDARD PLANS BOOK DATED 2010.

REVISED STANDARD PLAN RSP H9

2010 REVISED STANDARD PLAN RSP H9

DATE PLOTTED => 28-JUL-2016
TIME PLOTTED => 14:20

Dist	COUNTY	ROUTE	POST MILES TOTAL PROJECT	SHEET No.	TOTAL SHEETS
02	Las, Sie,Las	70, 395	3.5/3.9 R0.0/R3.1,R0.0/R5.6	199	236

Gregory A. Balzer
LICENSED LANDSCAPE ARCHITECT

July 19, 2013
PLANS APPROVAL DATE

LICENSED LANDSCAPE ARCHITECT Gregory A. Balzer 2576 STATE OF CALIFORNIA
C.A.L.A. No. 2576
2-28-15
Renewal Date
7-19-13
Date

THE STATE OF CALIFORNIA OR ITS OFFICERS OR AGENTS SHALL NOT BE RESPONSIBLE FOR THE ACCURACY OR COMPLETENESS OF SCANNED COPIES OF THIS PLAN SHEET.

TO ACCOMPANY PLANS DATED 06-15-16

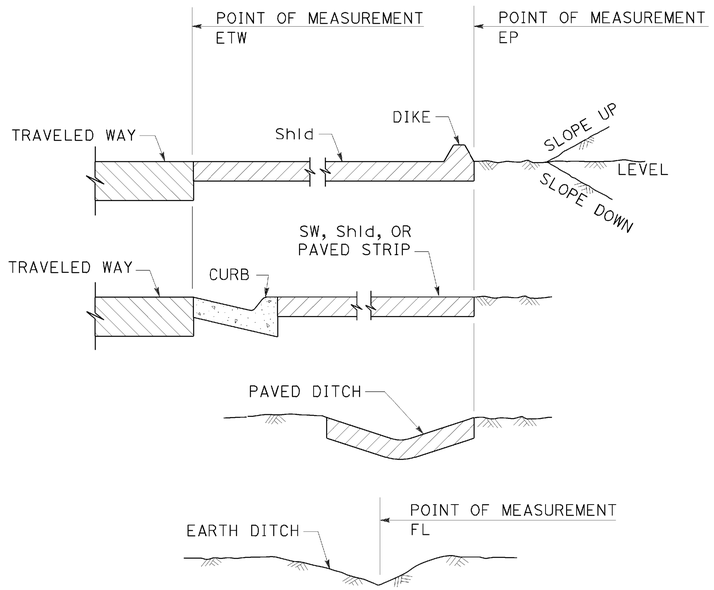

SECTION
POINTS OF MEASUREMENT

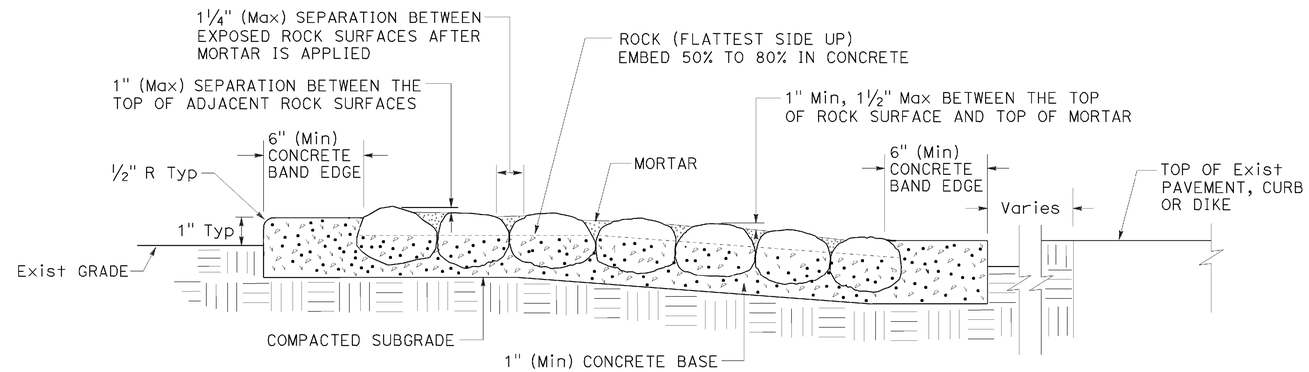

SECTION
ROCK BLANKET

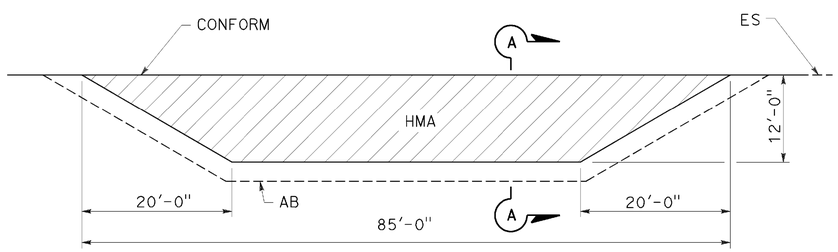

PLAN

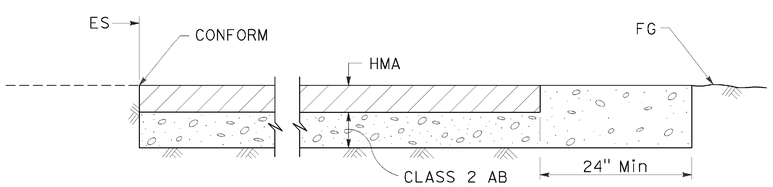

SECTION A-A
MAINTENANCE VEHICLE PULLOUT

STATE OF CALIFORNIA
DEPARTMENT OF TRANSPORTATION

LANDSCAPE DETAILS

NO SCALE

RSP H9A DATED JULY 19, 2013 SUPPLEMENTS THE STANDARD PLANS BOOK DATED 2010.

REVISED STANDARD PLAN RSP H9A

2010 REVISED STANDARD PLAN RSP H9A

DATE PLOTTED => 28-JUL-2016
TIME PLOTTED => 14:20

Dist	COUNTY	ROUTE	POST MILES TOTAL PROJECT	SHEET No.	TOTAL SHEETS
02	Las, Sie,Las	70, 395	3.5/3.9 R0.0/R3.1,R0.0/R5.6	200	236

REGISTERED CIVIL ENGINEER

July 19, 2013
PLANS APPROVAL DATE

REGISTERED PROFESSIONAL ENGINEER Gurinderpal Bhullar No. C48815 Exp. 9-30-14 CIVIL STATE OF CALIFORNIA

THE STATE OF CALIFORNIA OR ITS OFFICERS OR AGENTS SHALL NOT BE RESPONSIBLE FOR THE ACCURACY OR COMPLETENESS OF SCANNED COPIES OF THIS PLAN SHEET.

TO ACCOMPANY PLANS DATED 06-15-16

2010 REVISED STANDARD PLAN RSP T9

TABLE 1

TAPER LENGTH CRITERIA AND CHANNELIZING DEVICE SPACING

SPEED (S)	MINIMUM TAPER LENGTH * FOR WIDTH OF OFFSET 12 FEET (W)				MAXIMUM CHANNELIZING DEVICE SPACING		
					X	Y	Z **
	TANGENT 2L	MERGING L	SHIFTING L/2	SHOULDER L/3	TAPER	TANGENT	CONFLICT
mph	ft	ft	ft	ft	ft	ft	ft
20	160	80	40	27	20	40	10
25	250	125	63	42	25	50	12
30	360	180	90	60	30	60	15
35	490	245	123	82	35	70	17
40	640	320	160	107	40	80	20
45	1080	540	270	180	45	90	22
50	1200	600	300	200	50	100	25
55	1320	660	330	220	55	110	27
60	1440	720	360	240	60	120	30
65	1560	780	390	260	65	130	32
70	1680	840	420	280	70	140	35

* - For other offsets, use the following merging taper length formula for L:
For speed of 40 mph or less, $L = WS^2/60$
For speed of 45 mph or more, $L = WS$

Where: L = Taper length in feet
W = Width of offset in feet
S = Posted speed limit, off-peak 85th-percentile speed prior to work starting, or the anticipated operating speed in mph

** - Use for taper and tangent sections where there are no pavement markings or where there is a conflict between existing pavement markings and channelizers (CA).

TABLE 2

LONGITUDINAL BUFFER SPACE AND FLAGGER STATION SPACING

SPEED *	Min D **	DOWNGRADE Min D ***		
		-3%	-6%	-9%
mph	ft	ft	ft	ft
20	115	116	120	126
25	155	158	165	173
30	200	205	215	227
35	250	257	271	287
40	305	315	333	354
45	360	378	400	427
50	425	446	474	507
55	495	520	553	593
60	570	598	638	686
65	645	682	728	785
70	730	771	825	891

* - Speed is posted speed limit, off-peak 85th-percentile speed prior to work starting, or the anticipated operating speed in mph

** - Longitudinal buffer space or flagger station spacing

*** - Use on sustained downgrade steeper than -3 percent and longer than 1 mile.

TABLE 3

ADVANCE WARNING SIGN SPACING

ROAD TYPE	DISTANCE BETWEEN SIGNS *		
	A	B	C
	ft	ft	ft
URBAN - 25 mph OR LESS	100	100	100
URBAN - MORE THAN 25 mph TO 40 mph	250	250	250
URBAN - MORE THAN 40 mph	350	350	350
RURAL	500	500	500
EXPRESSWAY / FREEWAY	1000	1500	2640

* - The distances are approximate, are intended for guidance purposes only, and should be applied with engineering judgment. These distances should be adjusted by the Engineer for field conditions, if necessary, by increasing or decreasing the recommmended distances.

STATE OF CALIFORNIA
DEPARTMENT OF TRANSPORTATION

TRAFFIC CONTROL SYSTEM TABLES FOR LANE AND RAMP CLOSURES

NO SCALE

RSP T9 DATED JULY 19, 2013 SUPERSEDES RSP T9 DATED APRIL 19, 2013 THAT SUPPLEMENTS THE STANDARD PLANS BOOK DATED 2010.

REVISED STANDARD PLAN RSP T9

DATE PLOTTED => 28-JUL-2016
TIME PLOTTED => 14:20

TO ACCOMPANY PLANS DATED 06-15-16

Dist	COUNTY	ROUTE	POST MILES TOTAL PROJECT	SHEET No.	TOTAL SHEETS
02	Las, Sie,Las	70, 395	3.5/3.9 R0.0/R3.1,R0.0/R5.6	201	236

REGISTERED CIVIL ENGINEER

April 19, 2013
PLANS APPROVAL DATE

REGISTERED PROFESSIONAL ENGINEER Gurinderpal Bhullar No. C48815 Exp. 9-30-14 CIVIL STATE OF CALIFORNIA

THE STATE OF CALIFORNIA OR ITS OFFICERS OR AGENTS SHALL NOT BE RESPONSIBLE FOR THE ACCURACY OR COMPLETENESS OF SCANNED COPIES OF THIS PLAN SHEET.

NOTES:

See Revised Standard Plan RSP T9 for tables.

Use cone spacing X for taper segment, Y for tangent segment or Z for conflict situations, as approriate, per Table 1, unless X, Y, or Z cone spacing is shown on this sheet.

Unless otherwise specified in the special provisions, all temporary warning signs shall have black legend on fluorescent orange background.

California codes are designated by (CA). Otherwise, Federal (MUTCD) codes are shown.

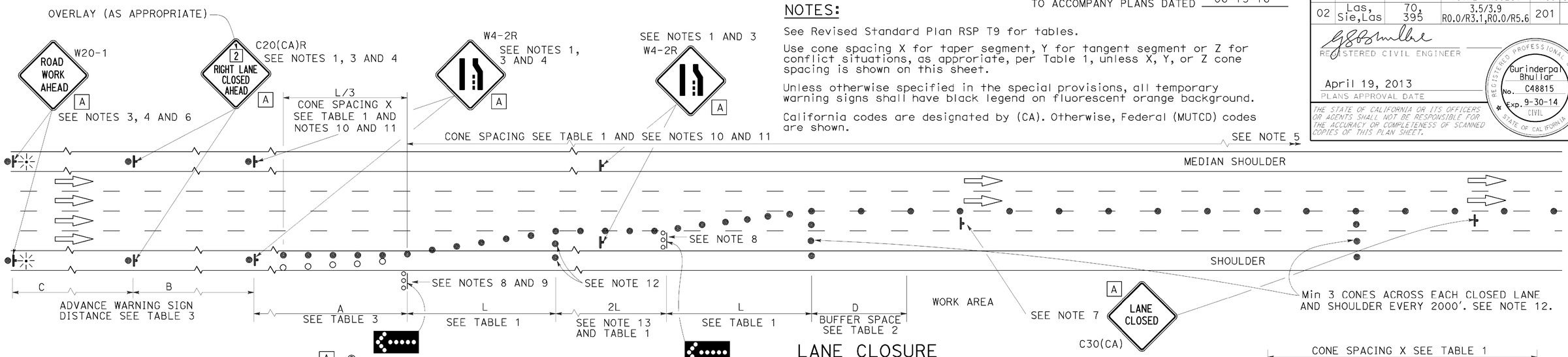

LANE CLOSURE

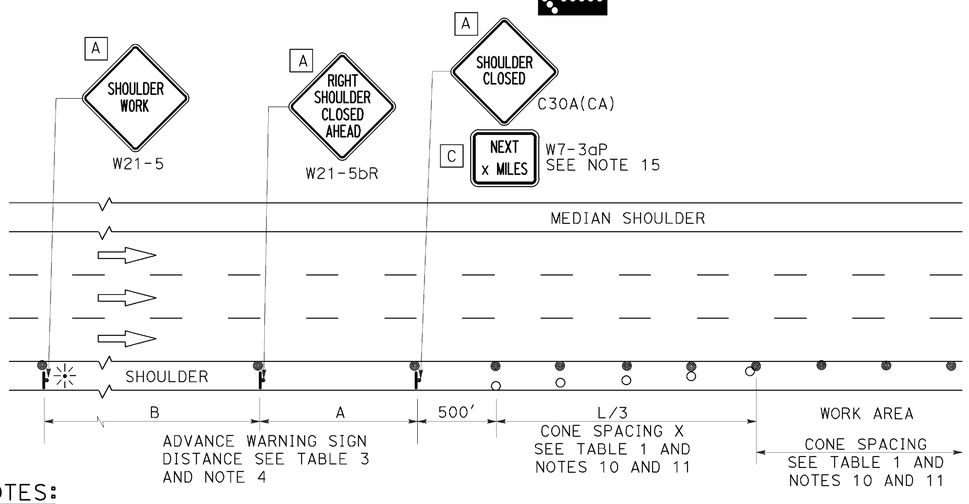

SHOULDER CLOSURE

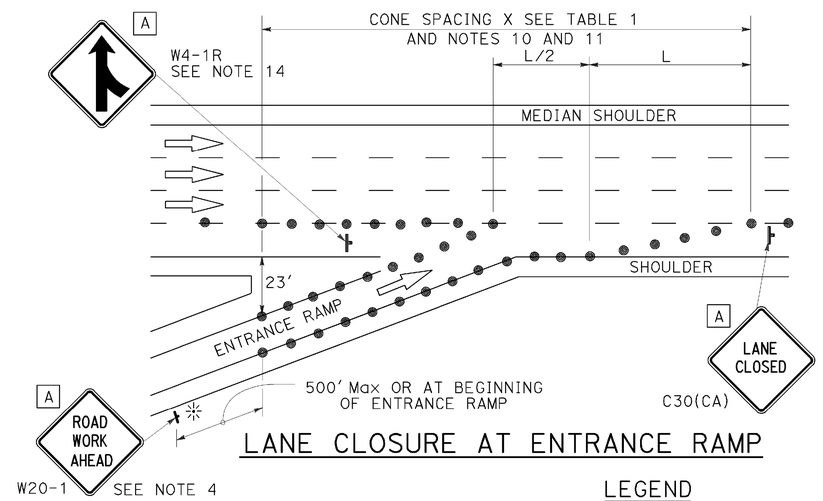

LANE CLOSURE AT ENTRANCE RAMP

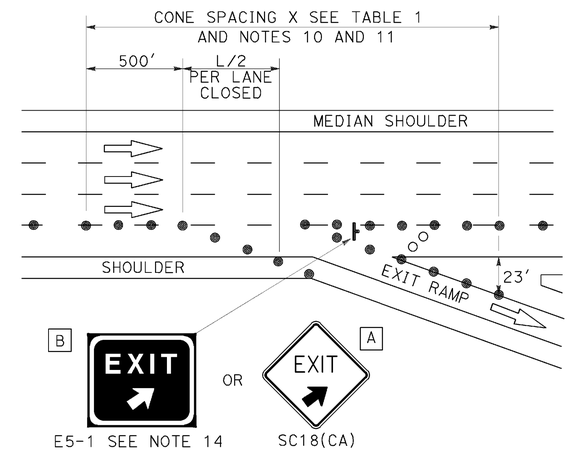

LANE CLOSURE AT EXIT RAMP

NOTES:

1. Median lane closures shall conform to the details as shown except that C20(CA)L and W4-2L signs shall be used.
2. At least one person shall be assigned to provide full time maintenance of traffic control devices for lane closures.
3. Duplicate sign installations are not required:
   a) On opposite shoulder if at least one-half of the available lanes remain open to traffic.
   b) In the median if the width of the median shoulder is less than 8' and the outside lanes are to be closed.
4. Each advance warning sign on each side of the roadway shall be equipped with at least two flags for daytime closure. Each flag shall be at least 16" x 16" in size and shall be orange or fluorescent red-orange in color. Flashing beacons shall be placed at the locations indicated for lane closure during hours of darkness.
5. A G20-2 "END ROAD WORK" sign, with minimum size of 48" x 24" as appropriate, shall be placed at the end of the lane closure unless the end of work area is obvious or ends within a larger project's limits.
6. If the W20-1 sign would follow within 2000' of a stationary W20-1 or G20-1 "ROAD WORK NEXT _____ MILES", use a C20(CA) sign for the first advance warning sign.
7. Place a C30(CA) sign every 2000' throughout length of lane closure.
8. One flashing arrow sign for each lane closed. The flashing arrow signs shall be Type I.
9. A minimum 1500' of sight distance shall be provided where possible for vehicles approaching the first flashing arrow sign. Lane closures shall not begin at top of crest vertical curve or on a horizontal curve.
10. All cones used for lane closures during the hours of darkness shall be fitted with retroreflective bands (or sleeves) as specified in the specifications.
11. Portable delineators, placed at one-half the spacing indicated for traffic cones may be used instead of cones for daytime closures only.
12. Unless otherwise specified in the special provisions, a minimum of 3 cones shall be placed transversely across each closed lane and shoulder at each location where a taper across a traffic lane ends and every 2000' as shown on the "Lane Closure" detail. Two Type II barricades may be used instead of the 3 cones. The transverse alignment of the cones or barricades on the closed shoulder may be shifted from the transverse alignment to provide access to the work.
13. Unless otherwise specified in the special provisions, the 2L tangent shown along lane lines shall be used between the L tapers required for each closed traffic lane.
14. Unless otherwise specified in the special provisions, the E5-1 or SC18(CA) and W4-1 signs shall be used as shown.
15. A W7-3aP "NEXT____ MILES" plaque must be used if theshoulder closure extends beyond the distance that can be perceived by road users.

LEGEND

- TRAFFIC CONE
- TRAFFIC CONE (OPTIONAL TAPER)
- TEMPORARY TRAFFIC CONTROL SIGN
- FLASHING ARROW SIGN (FAS)
- FAS SUPPORT OR TRAILER
- PORTABLE FLASHING BEACON

SIGN PANEL SIZE (Min)

A	48" x 48"
B	72" x 60"
C	36" x 30"

STATE OF CALIFORNIA
DEPARTMENT OF TRANSPORTATION

TRAFFIC CONTROL SYSTEM FOR LANE CLOSURE ON FREEWAYS AND EXPRESSWAYS

NO SCALE

RSP T10 DATED APRIL 19, 2013 SUPERSEDES STANDARD PLAN T10 DATED MAY 20, 2011 - PAGE 237 OF THE STANDARD PLANS BOOK DATED 2010.

REVISED STANDARD PLAN RSP T10

2010 REVISED STANDARD PLAN RSP T10

DATE PLOTTED => 28-JUL-2016
TIME PLOTTED => 14:21

TO ACCOMPANY PLANS DATED 06-15-16

Dist	COUNTY	ROUTE	POST MILES TOTAL PROJECT	SHEET No.	TOTAL SHEETS
02	Las, Sie,Las	70, 395	3.5/3.9 R0.0/R3.1,R0.0/R5.6	202	236

REGISTERED CIVIL ENGINEER

April 19, 2013
PLANS APPROVAL DATE

REGISTERED PROFESSIONAL ENGINEER Gurinderpal Bhullar No. C48815 Exp. 9-30-14 CIVIL STATE OF CALIFORNIA

THE STATE OF CALIFORNIA OR ITS OFFICERS OR AGENTS SHALL NOT BE RESPONSIBLE FOR THE ACCURACY OR COMPLETENESS OF SCANNED COPIES OF THIS PLAN SHEET.

NOTES: See Revised Standard Plan RSP T9 for tables.

Use cone spacing X for taper segment, Y for tangent segment or Z for conflict situations, as approriate, per Table 1, unless X, Y, or Z cone spacing is shown on this sheet.

Unless otherwise specified in the special provisions, all temporary warning signs shall have black legend on fluorescent orange background.

California codes are designated by (CA). Otherwise, Federal (MUTCD) codes are shown.

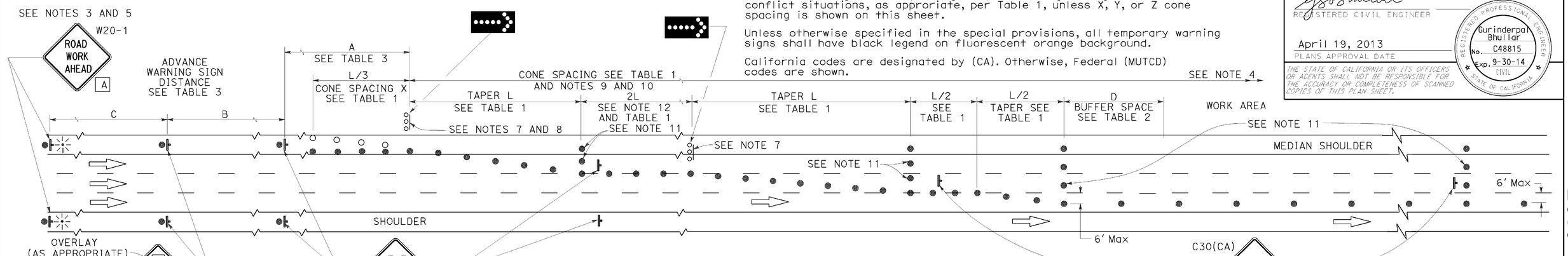

LANE CLOSURE WITH PARTIAL SHOULDER USE

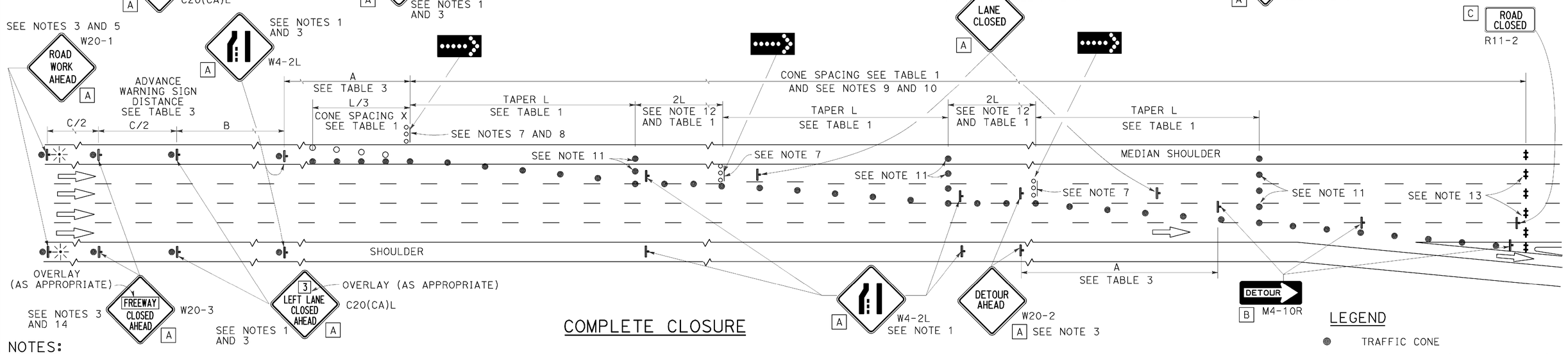

COMPLETE CLOSURE

NOTES:

1. Lane closures on the right side using partial median shoulder as a traffic lane shall conform to the details as shown except that C20(CA)R and W4-2R signs shall be used.
2. At least one person shall be assigned to provide full time maintenance of traffic control devices for lane closures.
3. Each advance warning sign on each side of the roadway shall be equipped with at least two flags for daytime closure. Each flag shall be at least 16" X 16" in size and shall be orange or fluorescent red-orange in color. Flashing beacons shall be placed at the locations indicated for lane closure during hours of darkness.
4. A G20-2 "END ROAD WORK" sign, with minimum size of 48" x 24" as appropriate, shall be placed at the end of the lane closure unless the end of work area is obvious or ends within a larger project's limits.
5. If the W20-1 sign would follow within 2000' of a stationary W20-1 or G20-1 "ROAD WORK NEXT ___ MILES", use a C20(CA) sign for the first advance warning sign.
6. Place a C30(CA) sign every 2000' throughout length of lane closure.
7. One flashing arrow sign for each lane closed. The flashing arrow signs shall be Type I.
8. A minimum 1500' of sight distance shall be provided where possible for vehicles approaching the first flashing arrow sign. Lane closures shall not begin at the top of crest vertical curve or on a horizontal curve.
9. All cones used for lane closures during the hours of darkness shall be fitted with retroreflective bands (or sleeves) as specified in the specifications.
10. Portable delineators, placed at one-half the spacing indicated for traffic cones, may be used instead of cones for daytime closures only.
11. Unless otherwise specified in the special provisions, a minimum of 3 cones shall be placed transversely across each closed lane and shoulder at each location where a taper across a traffic lane ends and every 2000' as shown on the "Lane Closure With Partial Shoulder Use" detail. Two Type II barricades may be used instead of the 3 cones. The transverse alignment of the cones or barricades on the closed shoulder may be shifted from the transverse alignment to provide access to the work.
12. Unless otherwise specified in the special provisions, the 2L tangent shown along lane lines shall be used between the L tapers required for each closed traffic lane.
13. A minimum of Two Type II or III barricades shall be placed across each closed lane and shoulder at the location shown and every 2000' within the complete closure area. Within the complete closure area, the transverse alignment of the barricades on the closed shoulder may be shifted from the transverse alignment to provide access to the work.
14. When specified in the special provisions, a W20-2 "DETOUR AHEAD" sign is to be used in place of the W20-3 "FREEWAY CLOSED AHEAD" sign.

SIGN PANEL SIZE (Min)

- A 48" x 48"
- B 48" x 18"
- C 48" x 30"

LEGEND

- TRAFFIC CONE
- TRAFFIC CONE (OPTIONAL TAPER)
- TEMPORARY TRAFFIC CONTROL SIGN
- FLASHING ARROW SIGN (FAS)
- FAS SUPPORT OR TRAILER
- PORTABLE FLASHING BEACON

STATE OF CALIFORNIA
DEPARTMENT OF TRANSPORTATION

TRAFFIC CONTROL SYSTEM FOR LANE CLOSURES ON FREEWAYS AND EXPRESSWAYS

NO SCALE

RSP T10A DATED APRIL 19, 2013 SUPERSEDES STANDARD PLAN T10A DATED MAY 20, 2011 - PAGE 238 OF THE STANDARD PLANS BOOK DATED 2010.

REVISED STANDARD PLAN RSP T10A

2010 REVISED STANDARD PLAN RSP T10A

DATE PLOTTED => 28-JUL-2016
TIME PLOTTED => 14:21

Dist	COUNTY	ROUTE	POST MILES TOTAL PROJECT	SHEET No.	TOTAL SHEETS
02	Las, Sie,Las	70, 395	3.5/3.9 R0.0/R3.1,R0.0/R5.6	203	236

REGISTERED CIVIL ENGINEER

April 19, 2013
PLANS APPROVAL DATE

REGISTERED PROFESSIONAL ENGINEER Gurinderpal Bhullar No. C48815 Exp. 9-30-14 CIVIL STATE OF CALIFORNIA

THE STATE OF CALIFORNIA OR ITS OFFICERS OR AGENTS SHALL NOT BE RESPONSIBLE FOR THE ACCURACY OR COMPLETENESS OF SCANNED COPIES OF THIS PLAN SHEET.

TO ACCOMPANY PLANS DATED 06-15-16

TYPICAL RAMP CLOSURES

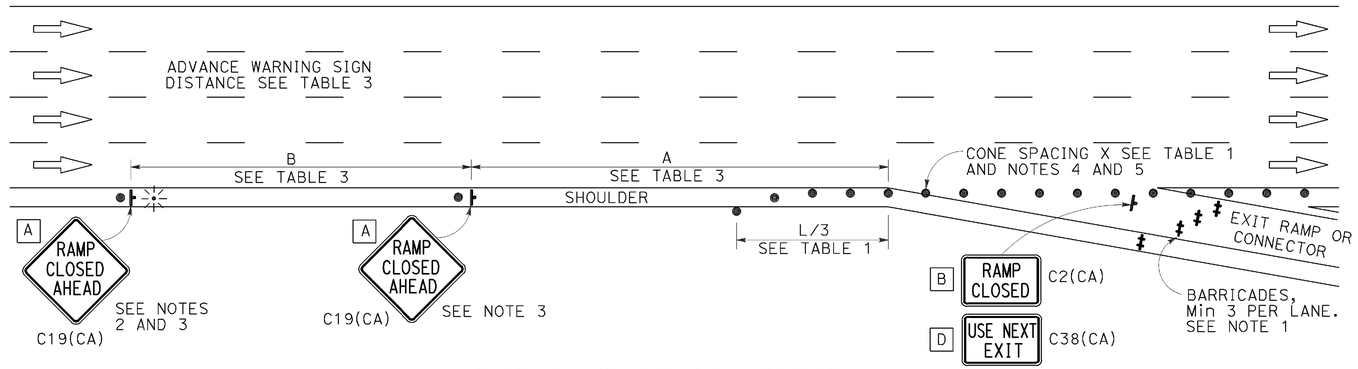

EXIT RAMP OR CONNECTOR

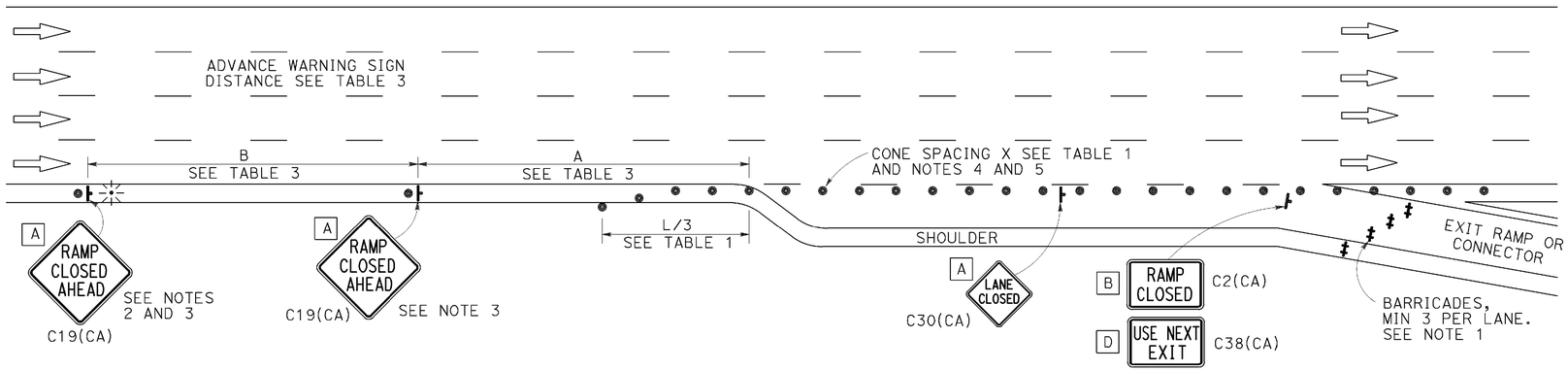

EXIT RAMP OR CONNECTOR WITH ADDITIONAL LANE

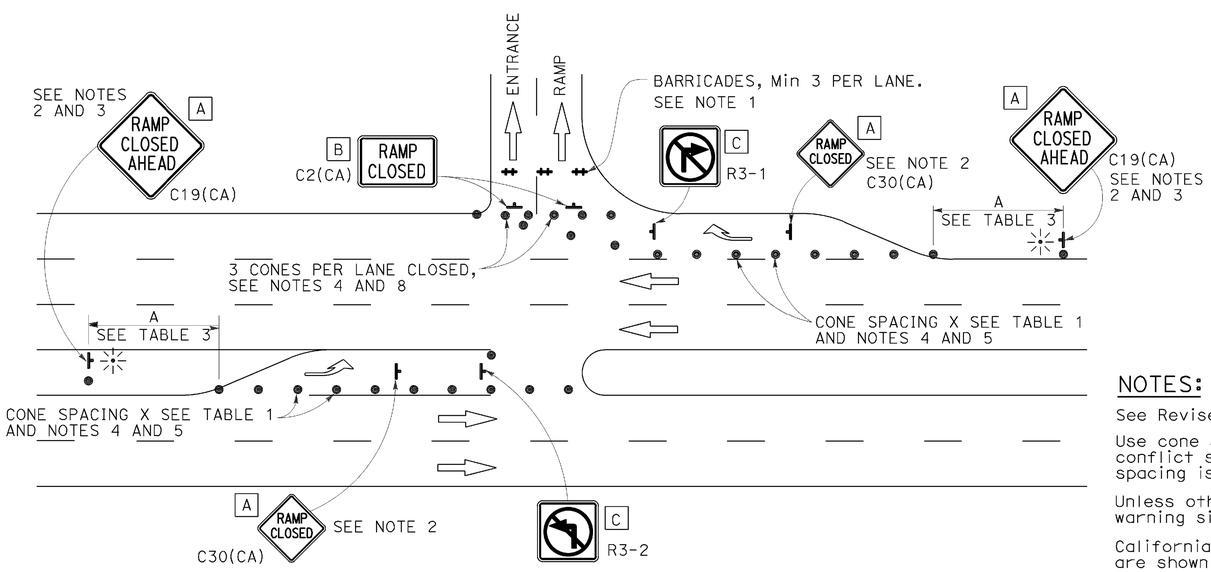

ENTRANCE RAMP WITH TURNING POCKETS

SIGN PANEL SIZE (Min)

- A 48" × 48"
- B 48" × 30"
- C 36" × 36"
- D 48" × 36"

LEGEND

- TRAFFIC CONE
- TEMPORARY TRAFFIC CONTROL SIGN
- BARRICADES
- PORTABLE FLASHING BEACON

NOTES:

1. Barricades shall be Type I, II, or III for closures lasting one week or less and Type III for closures lasting longer than one week.
2. In addition to placing the C19(CA) "RAMP CLOSED AHEAD" and C30(CA) "RAMP CLOSED" signs, black on orange overlay plates with the word "CLOSED" may be mounted, as directed by the Engineer, on all guide signs that refer to the closed ramp. The letter size on the overlay shall be the same as the guide sign.
3. Each advance C19(CA) "RAMP CLOSED AHEAD" sign shall be equipped with at least two flags for daytime closure. Each flag shall be at least 16" × 16" in size and shall be orange or fluorescent red-orange in color. A flashing beacon shall be placed on top of the first C19(CA) sign during hours of darkness.
4. All cones used for ramp closures during the hours of darkness shall be fitted with retroreflective bands (or sleeves) as specified in the specifications.
5. Portable delineators, placed at one-half the spacing indicated for traffic cones, may be used instead of cones for daytime ramp closures only.
6. At least one person shall be assigned to provide full time maintenance of traffic control devices, unless otherwise directed by the Engineer.
7. The existing "EXIT" signs shall be covered during ramp closures.
8. A minimum of 3 cones shall be placed transversely across each closed lane and shoulder.

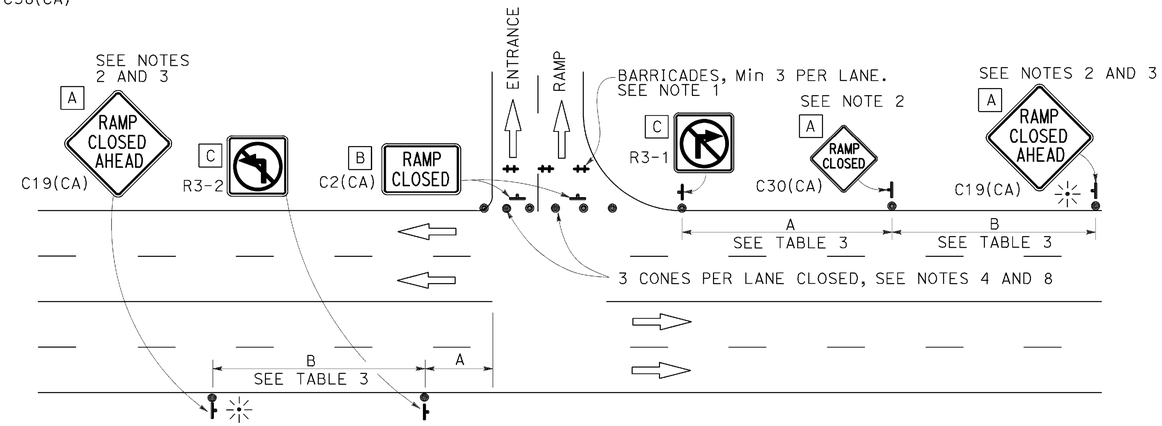

ENTRANCE RAMP WITHOUT TURNING POCKETS

NOTES:

See Revised Standard Plan RSP T9 for tables.

Use cone spacing X for taper segment, Y for tangent segment or Z for conflict situations, as approriate, per Table 1, unless X, Y, or Z cone spacing is shown on this sheet.

Unless otherwise specified in the special provisions, all temporary warning signs shall have black legend on fluorescent orange background.

California codes are designated by (CA). Otherwise, Federal (MUTCD) codes are shown.

STATE OF CALIFORNIA
DEPARTMENT OF TRANSPORTATION

TRAFFIC CONTROL SYSTEM FOR RAMP CLOSURE

NO SCALE

RSP T14 DATED APRIL 19, 2013 SUPERSEDES STANDARD PLAN T14 DATED MAY 20, 2011 - PAGE 242 OF THE STANDARD PLANS BOOK DATED 2010.

REVISED STANDARD PLAN RSP T14

2010 REVISED STANDARD PLAN RSP T14

DATE PLOTTED => 28-JUL-2016
TIME PLOTTED => 14:22

Dist	COUNTY	ROUTE	POST MILES TOTAL PROJECT	SHEET No.	TOTAL SHEETS
02	Las, Sie,Las	70, 395	3.5/3.9 R0.0/R3.1,R0.0/R5.6	204	236

REGISTERED CIVIL ENGINEER

April 19, 2013
PLANS APPROVAL DATE

REGISTERED PROFESSIONAL ENGINEER Gurinderpal Bhullar No. C48815 Exp. 9-30-14 CIVIL STATE OF CALIFORNIA

THE STATE OF CALIFORNIA OR ITS OFFICERS OR AGENTS SHALL NOT BE RESPONSIBLE FOR THE ACCURACY OR COMPLETENESS OF SCANNED COPIES OF THIS PLAN SHEET.

TO ACCOMPANY PLANS DATED 06-15-16

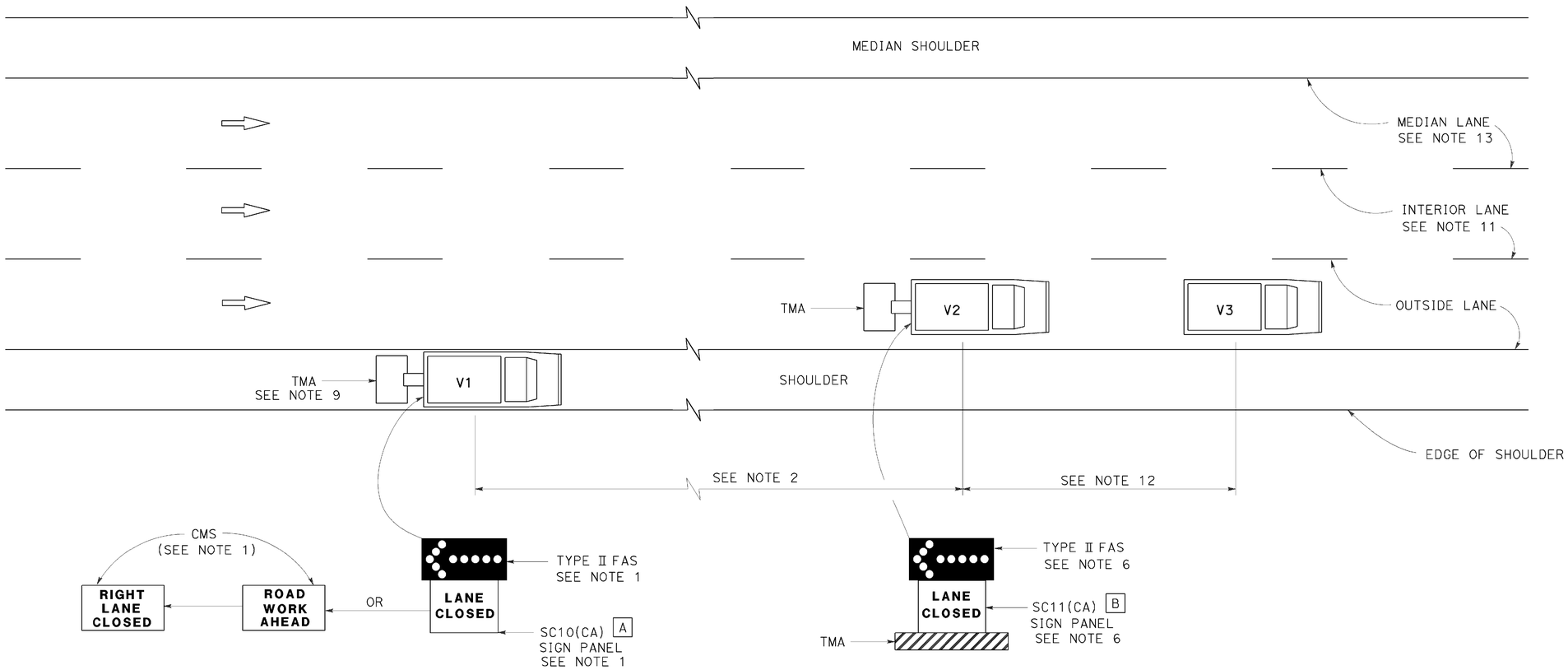

MOVING LANE CLOSURE ON MEDIAN LANE OR OUTSIDE LANE OF MULTILANE HIGHWAYS

SIGN PANEL SIZE (Min)

A 66" x 36"

B 54" x 42"

LEGEND

V1	SIGN VEHICLE
V2	SHADOW VEHICLE
V3	WORK/APPLICATION VEHICLE
	FLASHING ARROW SIGN (FAS)
CMS	CHANGEABLE MESSAGE SIGN
TMA	TRUCK-MOUNTED ATTENUATOR

NOTES:

1. Either a changeable message sign or a SC10(CA) sign panel and a Type II flashing arrow sign shall be mounted on the rear of sign vehicle V1. The changeable message sign shall be sequenced to show the "ROAD WORK AHEAD" message first, followed by the "RIGHT LANE CLOSED" message. For median lane closure, the flashing arrow symbol shall be reversed with the arrowhead on the right and the changeable message sign shall show "LEFT LANE CLOSED".
2. If traffic queues develop, sign vehicle V1 should be positioned upstream from the end of queue. Sign vehicle V1 shall be positioned where highly visible when shoulders are not available.
3. A minimum sight distance of 1500′ should be provided in advance of sign vehicle V1.
4. Sign vehicle V1 should remain at the beginning of horizontal or vertical curves until the other vehicles (V2 and V3) are far enough beyond the curve to resume the minimum sight distance of 1500′.
5. Vehicle-mounted sign panels shall have Type III or above retroreflective sheeting, black on white, or black on fluorescent orange, with 6" minimum series D letters per Caltrans sign specifications.
6. Shadow vehicle V2 shall be equipped with a truck-mounted attenuator. The sign panel shown and a Type II flashing arrow sign shall be mounted on the rear of shadow vehicle V2. For median lane closure the flashing arrow sign symbol shall be displayed with the arrowhead on the right.
7. All vehicles used for lane closures shall be equipped with two-way radios, and the vehicle operators shall maintain communication during the work or application operation.
8. All vehicles shall be equipped with flashing or rotating amber lights.
9. If sign vehicle V1 encroaches into the traffic lane due to insufficient shoulder width, sign vehicle V1 shall be equipped with a truck-mounted attenuator. Sign vehicle V1 shall stay as close to the edge of shoulder as practicable.
10. Where workers would be on foot in the work area, a stationary type lane closure (Revised Standard Plan T10, T11, etc., as applicable) shall be used instead of this plan.
11. For moving lane closure on interior lane of multilane highways, use Revised Standard Plan T16.
12. The spacing between work vehicle(s) and the shadow vehicles, and between each shadow vehicle should be minimized to deter road users from driving in between.
13. When the work/application vehicle V3 occupies the median lane, sign vehicle V1 should drive in the median shoulder and indicate left lane closed ahead.

STATE OF CALIFORNIA
DEPARTMENT OF TRANSPORTATION

TRAFFIC CONTROL SYSTEM FOR MOVING LANE CLOSURE ON MULTILANE HIGHWAYS

NO SCALE

RSP T15 DATED APRIL 19, 2013 SUPERSEDES STANDARD PLAN T15
DATED MAY 20, 2011 - PAGE 243 OF THE STANDARD PLANS BOOK DATED 2010.

REVISED STANDARD PLAN RSP T15

2010 REVISED STANDARD PLAN RSP T15

DATE PLOTTED => 28-JUL-2016
TIME PLOTTED => 14:22

Dist	COUNTY	ROUTE	POST MILES TOTAL PROJECT	SHEET No.	TOTAL SHEETS
02	Las, Sie,Las	70, 395	3.5/3.9 R0.0/R3.1,R0.0/R5.6	205	236

REGISTERED CIVIL ENGINEER

April 19, 2013
PLANS APPROVAL DATE

REGISTERED PROFESSIONAL ENGINEER Gurinderpal Bhullar No. C48815 Exp. 9-30-14 CIVIL STATE OF CALIFORNIA

THE STATE OF CALIFORNIA OR ITS OFFICERS OR AGENTS SHALL NOT BE RESPONSIBLE FOR THE ACCURACY OR COMPLETENESS OF SCANNED COPIES OF THIS PLAN SHEET.

TO ACCOMPANY PLANS DATED 06-15-16

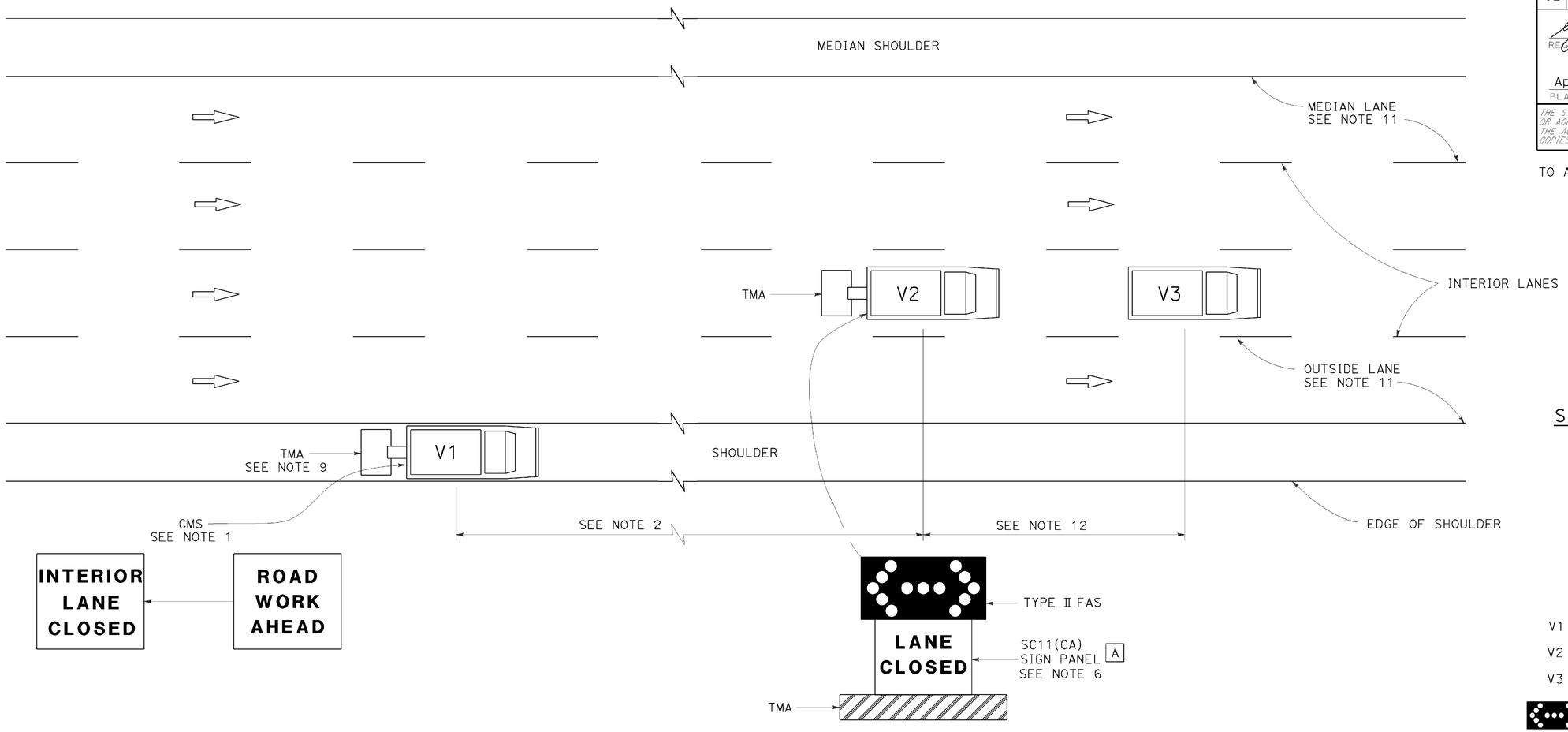

MOVING LANE CLOSURE ON INTERIOR LANE OF MULTILANE HIGHWAYS

SIGN PANEL SIZE (Min)

A 54" x 42"

LEGEND

V1	SIGN VEHICLE
V2	SHADOW VEHICLE
V3	WORK/APPLICATION VEHICLE
	FLASHING ARROW SIGN (FAS) IN FLASHING DOUBLE ARROW MODE
CMS	CHANGEABLE MESSAGE SIGN
TMA	TRUCK-MOUNTED ATTENUATOR

NOTES:

1. A changeable message sign shall be mounted on the rear of sign vehicle V1. The changeable message sign shall be sequenced to show the "ROAD WORK AHEAD" message first, followed by the "INTERIOR LANE CLOSED" message. The message "CENTER LANE CLOSED" may be used in place of the "INTERIOR LANE CLOSED" message.
2. If traffic queues develop, sign vehicle V1 should be positioned upstream from the end of queue. Sign vehicle V1 shall be positioned where highly visible when shoulders are not available.
3. A minimum sight distance of 1500′ should be provided in advance of sign vehicle V1.
4. Sign vehicle V1 should remain at the beginning of horizontal or vertical curves until the other vehicles (V2 and V3) are far enough beyond the curve to resume the minimum sight distance of 1500′.
5. Vehicle-mounted sign panels shall have Type Ⅲ or above retroreflective sheeting, black on white, or black on fluorescent orange, with 6" minimum series D letters per Caltrans sign specifications.
6. Shadow vehicle V2 shall be equipped with a truck-mounted attenuator. The sign panel shown and a Type Ⅱ flashing arrow sign shall be mounted on the rear of shadow vehicle V2.
7. All vehicles used for lane closures shall be equipped with two-way radios, and the vehicle operators shall maintain communication during the work or application operation.
8. All vehicles shall be equipped with flashing or rotating amber lights.
9. If sign vehicle V1 encroaches into the traffic lane due to insufficient shoulder width, sign vehicle V1 shall be equipped with a truck-mounted attenuator. Sign vehicle V1 shall stay as close to the edge of shoulder as practicable.
10. Where workers would be on foot in the work area, a stationary type lane closure (Revised Standard Plan T10, T11 etc., as applicable) shall be used instead of this plan.
11. For moving lane closure on median lane or outside lane of multilane highways, use Revised Standard Plan T15.
12. The spacing between work vehicle(s) and the shadow vehicles, and between each shadow vehicle should be minimized to deter road users from driving in between.

STATE OF CALIFORNIA
DEPARTMENT OF TRANSPORTATION

TRAFFIC CONTROL SYSTEM FOR MOVING LANE CLOSURE ON MULTILANE HIGHWAYS

NO SCALE

RSP T16 DATED APRIL 19, 2013 SUPERSEDES STANDARD PLAN T16 DATED MAY 20, 2011 - PAGE 244 OF THE STANDARD PLANS BOOK DATED 2010.

REVISED STANDARD PLAN RSP T16

2010 REVISED STANDARD PLAN RSP T16

DATE PLOTTED => 28-JUL-2016
TIME PLOTTED => 14:22

Dist	COUNTY	ROUTE	POST MILES TOTAL PROJECT	SHEET No.	TOTAL SHEETS
02	Las, Sie,Las	70, 395	3.5/3.9 R0.0/R3.1,R0.0/R5.6	206	236

REGISTERED CIVIL ENGINEER

October 30, 2015
PLANS APPROVAL DATE

REGISTERED PROFESSIONAL ENGINEER Efthymios Delis No. C51434 Exp. 6-30-17 CIVIL STATE OF CALIFORNIA

THE STATE OF CALIFORNIA OR ITS OFFICERS OR AGENTS SHALL NOT BE RESPONSIBLE FOR THE ACCURACY OR COMPLETENESS OF SCANNED COPIES OF THIS PLAN SHEET.

TO ACCOMPANY PLANS DATED 06-15-16

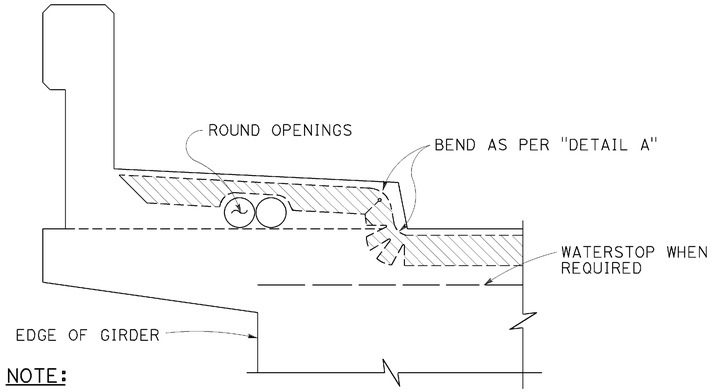

NOTE:
Type "B" seal shown. Type "A" seals to comform to the general path of seal shown, cuts for bending not required. Bend type "A" seals 3" up into curb or barrier rail on only the low end of the seal.

CONCRETE BARRIER AND SIDEWALK

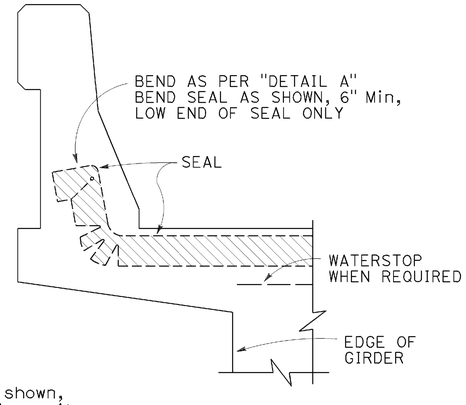

CONCRETE BARRIER

JOINT SEALS DETAILS

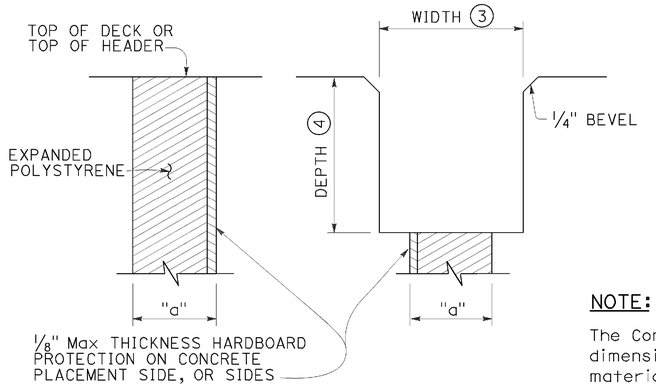

FORMING DETAIL SAWCUT DETAIL

NOTE:
The Contractor shall verify all controlling field dimensions before ordering or fabricatiing any material.

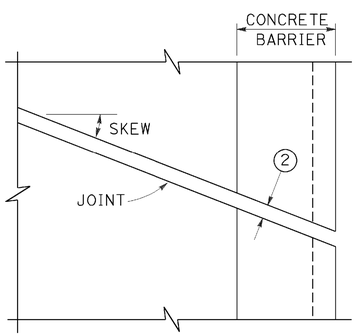

PLAN OF JOINT (SKEW ≤ 20°)

Min ℄ RADIUS TO BE 4 TIMES UNCOMPRESSED WIDTH OF SEAL OR AS RECOMMENDED BY THE MANUFACTURER, WHICHEVER IS GREATER

IN LIEU OF SAW CUTTING, THIS AREA MAY BE BLOCKED OUT AND RECONSTRUCTED TO MATCH SAW CUTTING ON BOTH SIDES.

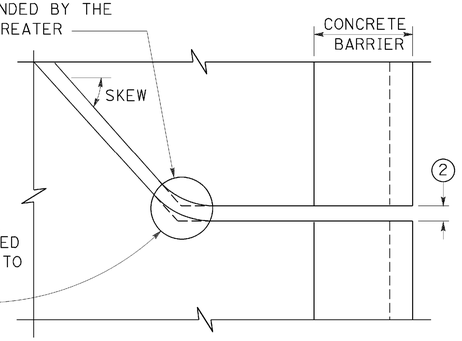

PLAN OF JOINT (SKEW > 20°)

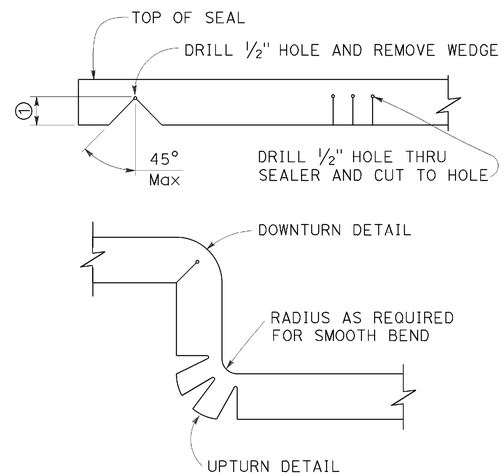

DETAIL A

NOTES:

1. Make smooth cuts from the bottom of seal to 1½" clear of top leaving at least one complete cell between the top of the cut and top of the seal. When necessary cut back of seal to clear conduit and round openings.
2. Opening in barrier to match width of sawn deck joint.
3. Sawcut groove widths shall be as ordered by the Engineer.
4. Depth of sawcut: Type A - Depth to be 2" minimum.
   Type B - Depth to be equal to or greater than the depth of seal measured along the contact surface, when compressed to minimum width position (W_2) plus dimensions shown.
5. MR (movement rating) as shown on other plan sheets.
6. Other depths must be approved by the Engineer.
7. A sidewalk joint shall be covered by an expansion joint armor.

DIMENSIONS "a" OF JOINT REQUIRED

MOVEMENT RATING (MR) (5)	BRIDGE TYPE	"a" DIMENSION DECK CONCRETE PLACED		
		WINTER	FALL-SPRING	SUMMER
2"	ALL EXCEPT CIP/PS	1½"	1¼"	¾"
	CIP/PS	1¼"	1"	½"
1½"	ALL EXCEPT CIP/PS	1¼"	1"	½"
	CIP/PS	1"	¾"	½"
1"	ALL EXCEPT CIP/PS	1"	¾"	½"
	CIP/PS	¾"	½"	½"
½"	ALL EXCEPT CIP/PS	¾"	¾"	½"
	CIP/PS	½"	½"	½"

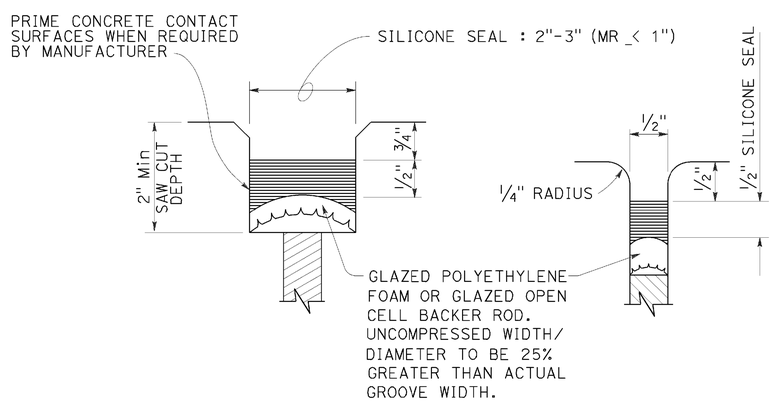

TYPE A SEAL
Movement rating : Silicone = 1" Max

TYPE AL SEAL
Longitudinal joints only

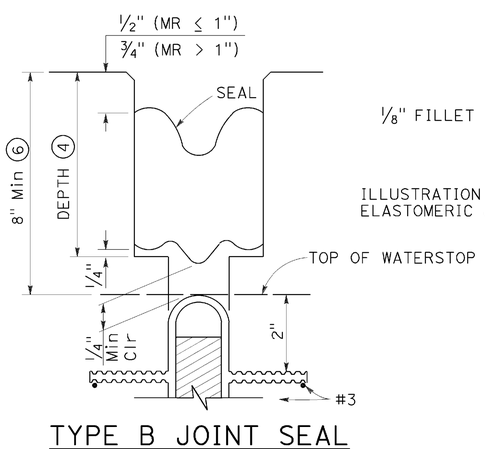

TYPE B JOINT SEAL
IN MINIMUM WIDTH POSITION (W_2)

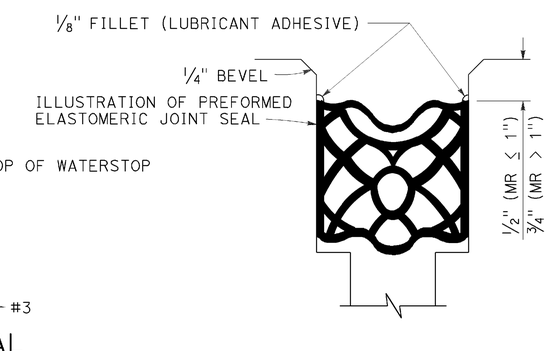

TYPE B SEAL
Movement Rating ≤ 2"

STATE OF CALIFORNIA
DEPARTMENT OF TRANSPORTATION

JOINT SEALS (MAXIMUM MOVEMENT RATING = 2")

NO SCALE

RSP B6-21 DATED OCTOBER 30, 2015 SUPERSEDES STANDARD PLAN B6-21 DATED MAY 20, 2011 - PAGE 283 OF THE STANDARD PLANS BOOK DATED 2010.

REVISED STANDARD PLAN RSP B6-21

2010 REVISED STANDARD PLAN RSP B6-21

DATE PLOTTED => 28-JUL-2016
TIME PLOTTED => 14:23

Dist	COUNTY	ROUTE	POST MILES TOTAL PROJECT	SHEET No.	TOTAL SHEETS
02	Las, Sie,Las	70, 395	3.5/3.9 R0.0/R3.1,R0.0/R5.6	207	236

REGISTERED CIVIL ENGINEER

October 30, 2015
PLANS APPROVAL DATE

REGISTERED PROFESSIONAL ENGINEER Stanley P. Johnson No. C57793 Exp. 3-31-16 CIVIL STATE OF CALIFORNIA

THE STATE OF CALIFORNIA OR ITS OFFICERS OR AGENTS SHALL NOT BE RESPONSIBLE FOR THE ACCURACY OR COMPLETENESS OF SCANNED COPIES OF THIS PLAN SHEET.

TO ACCOMPANY PLANS DATED 06-15-16

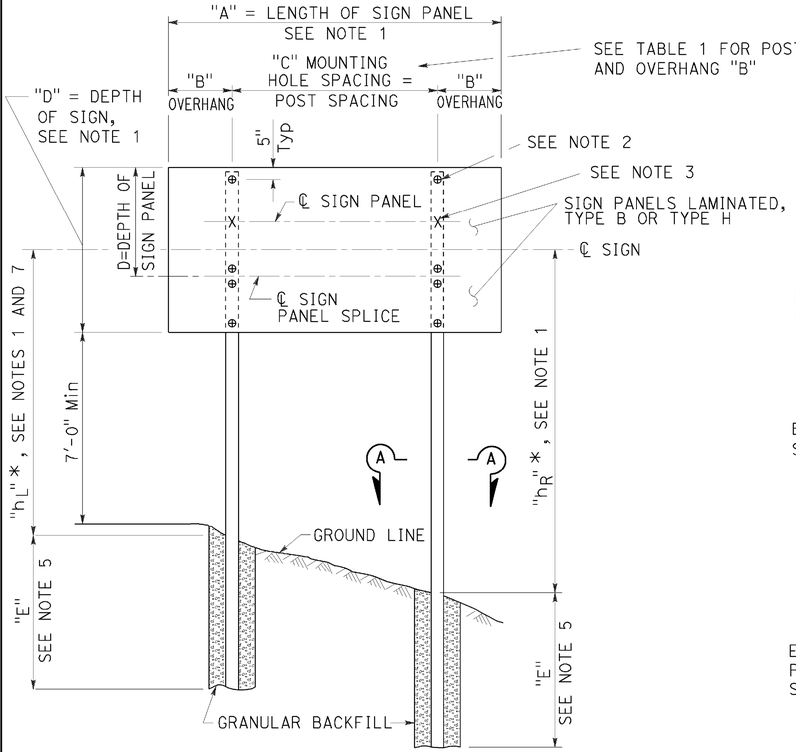

ELEVATION

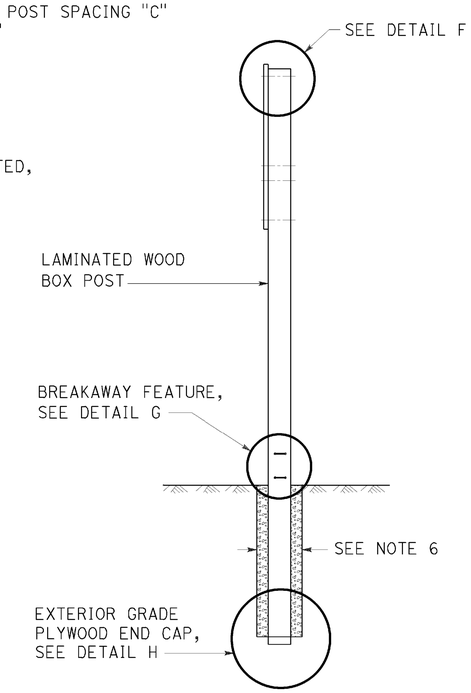

SIDE VIEW

SIGN PANEL LENGTH (SEE NOTE 1)	SIGN PANEL OVERHANG	MOUNTING HOLE SPACING
"A"	"B"	"C"
8'-0"	1'-6"	5'-0"
9'-0"	1'-10"	5'-4"
10'-0"	2'-0"	6'-0"
11'-0"	2'-0"	7'-0"
12'-0"	2'-6"	7'-0"
13'-0"	2'-6"	8'-0"
14'-0"	2'-6"	9'-0"
15'-0"	3'-0"	9'-0"
16'-0"	3'-3"	9'-6"
17'-0"	3'-3"	10'-6"
18'-0"	3'-6"	11'-0"
19'-0"	3'-9"	11'-6"
20'-0"	4'-0"	12'-0"
21'-0"	4'-3"	12'-6"
22'-0"	4'-3"	13'-6"
23'-0"	4'-6"	14'-0"
24'-0"	4'-9"	14'-6"

TABLE 1

"hL" OR "hR" (IN FEET)	TOTAL SIGN AREA SQFT				
	40 TO 90	90+ TO 140	140+ TO 190	190+ TO 240	240+ TO 290
9'-0" TO 13'-0"	6'	6.5'	7.5'	8.5'	9'
13'-0"+ TO 17'-0"	6'	7'	8'	9'	10'
17'-0"+ TO 21'-0"	6'	7.5'	9'	9'	
21'-0"+ TO 26'-0"	7'	8'	9'		

TABLE 2

See Note 8

NOTES:

1. See Project Plans for:
   Location of each sign.
   Length of sign panel "A".
   Depth of sign "D".
   Height "h_L" and "h_R" of centerline of sign above ground line at each post.
   Type of post, L and M.
   See Standard Plan RS1 for other details.
2. "⊕" Indicates location of ½" lag screws and existing holes in panels. Lag screws are to be embedded at least 1" into post using 5/16" diameter pilot holes.
3. "x" Indicates location of additional ½" lag screws required when the depth of sign panel (d) and the length of sign panel (A) are as follows:

A	d
17'-0" to 24'-0"	5'-0"
19'-0" to 24'-0"	4'-6"
21'-0" to 24'-0"	4'-0"
24'-0"	3'-6"

4. Type B laminated sign panels are 1" nominal thick for sign lengths of 15'-0" and less. Panels over 15'-0" in length and Type H laminated sign panels are 2½" nominal thick.
5. Embedment "E" for Type L post shall conform to the requirements in Table 2. Embedment for Type M posts shall be 6'-0" minimum.
6. Diameter of post holes for Type L posts shall be at least 2'-6". Diameter of post holes for Type M posts shall be at least 2'-0".
7. Dimensions shown on project plans are for fabrication. During installation adjust these dimensions to provide A level sign appoximately 7'-0" above roadway shoulder.
8. Minimum post embedment "E" for Type L post.

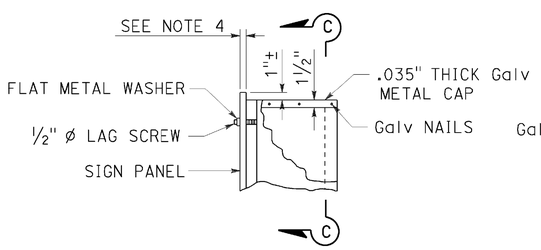

DETAIL F

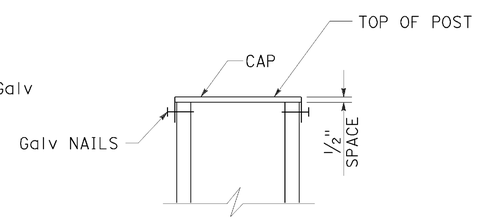

SECTION C-C

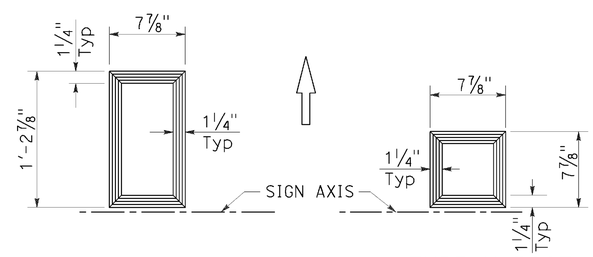

TYPE L POST

TYPE M POST

SECTION A-A

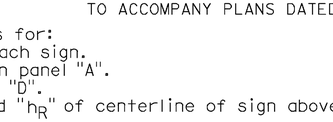

GALV METAL CAP

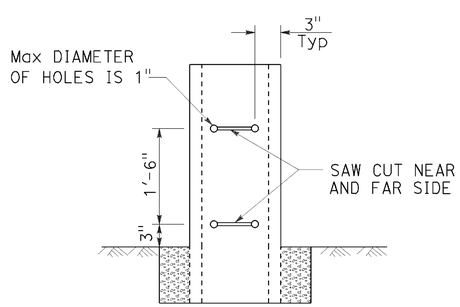

DETAIL G

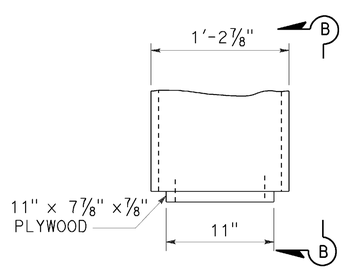

TYPE L POST

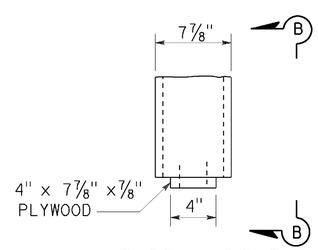

TYPE M POST

DETAIL H

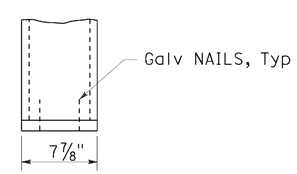

SECTION B-B

STATE OF CALIFORNIA
DEPARTMENT OF TRANSPORTATION

ROADSIDE SIGNS
LAMINATED WOOD BOX POST
TYPICAL INSTALLATION
DETAILS No. 3

NO SCALE

RSP RS3 DATED OCTOBER 30, 2015 SUPERSEDES STANDARD PLAN RS3 DATED MAY 20, 2011 - PAGE 332 OF THE STANDARD PLANS BOOK DATED 2010.

REVISED STANDARD PLAN RSP RS3

2010 REVISED STANDARD PLAN RSP RS3

DATE PLOTTED => 28-JUL-2016
TIME PLOTTED => 14:23

Dist	COUNTY	ROUTE	POST MILES TOTAL PROJECT	SHEET No.	TOTAL SHEETS
02	Las, Sie,Las	70, 395	3.5/3.9 R0.0/R3.1,R0.0/R5.6	208	236

Theresa Gabriel
REGISTERED ELECTRICAL ENGINEER

October 30, 2015
PLANS APPROVAL DATE

REGISTERED PROFESSIONAL ENGINEER Theresa Aziz Gabriel No. E15129 Exp. 6-30-16 ELECTRICAL STATE OF CALIFORNIA

THE STATE OF CALIFORNIA OR ITS OFFICERS OR AGENTS SHALL NOT BE RESPONSIBLE FOR THE ACCURACY OR COMPLETENESS OF SCANNED COPIES OF THIS PLAN SHEET.

TO ACCOMPANY PLANS DATED 06-15-16

LEGEND:

- AB — ABANDON. IF APPLIED TO CONDUIT, REMOVE CONDUCTORS
- BC — INSTALL PULL BOX IN EXISTING CONDUIT RUN
- BP — PEDESTRIAN BARRICADE, TYPE AS INDICATED ON PLAN
- CB — INSTALL CONDUIT INTO EXISTING PULL BOX
- CC — CONNECT NEW AND EXISTING CONDUIT. REMOVE EXISTING CONDUCTORS AND INSTALL CONDUCTORS AS INDICATED
- CF — CONDUIT TO REMAIN FOR FUTURE USE. REMOVE CONDUCTORS. INSTALL PULL TAPE
- DH — DETECTOR HANDHOLE
- FA — FOUNDATION TO BE ABANDONED
- IS — INSTALL SIGN ON SIGNAL MAST ARM
- NS — NO SLIP BASE ON STANDARD
- PEC — PHOTOELECTRIC CONTROL
- PEU — PHOTOELECTRIC UNIT
- RC — EQUIPMENT OR MATERIAL TO BE REMOVED AND BECOME THE PROPERTY OF THE CONTRACTOR
- RE — REMOVE ELECTROLIER, FUSES AND BALLAST. TAPE ENDS OF CONDUCTORS
- RL — RELOCATE EQUIPMENT
- RR — REMOVE AND REUSE EQUIPMENT
- RS — REMOVE AND SALVAGE EQUIPMENT
- SC — SPLICE NEW TO EXISTING CONDUCTORS
- SD — SERVICE DISCONNECT
- TSP — TELEPHONE SERVICE POINT

ABBREVIATIONS

AC+	UNDERGROUNDED CONDUCTOR
APS	ACCESSIBLE PEDESTRIAN SIGNAL
Batt	BATTERY
BBS	BATTERY BACKUP SYSTEM
BC	BOLT CIRCLE
Blk	BLACK
BP	BYPASS
BPB	BICYCLE PUSH BUTTON
C	CONDUIT
CB	CIRCUIT BREAKER
CCTV	CLOSED CIRCUIT TELEVISION
Ckt	CIRCUIT
CMS	CHANGEABLE MESSAGE SIGN
Ctid	CALTRANS IDENTIFICATION
Comm	COMMUNICATION
Cntl	CONTROL
DF	DEPARTMENT-FURNISHED
DLC	LOOP DETECTOR LEAD-IN CABLE
EMS	EXTINGUISHABLE MESSAGE SIGN
EVUC	EMERGENCY VEHICLE UNIT CABLE
EVUD	EMERGENCY VEHICLE UNIT DETECTOR
FB	FLASHING BEACON
FBCA	FLASHING BEACON CONTROL ASSEMBLY
FBS	FLASHING BEACON WITH SLIP BASE
FO	FIBER OPTIC
G	EQUIPMENT GROUNDING CONDUCTOR
GB	GROUND BUS
GFCI	GROUND FAULT CIRCUIT INTERRUPTER
Grn	GREEN
HAR	HIGHWAY ADVISORY RADIO
Hex	HEXAGONAL
HPS	HIGH PRESSURE SODIUM
IISNS	INTERNALLY ILLUMINATED STREET NAME SIGN
ISL	INDUCTION SIGN LIGHTING
LED	LIGHT EMITTING DIODE
LMA	LUMINAIRE MAST ARM
LPS	LOW PRESSURE SODIUM
Ltg	LIGHTING
Lum	LUMINAIRE
M	METERED
MAT	MAST ARM MOUNTING TOP ATTACHMENT
MAS	MAST ARM MOUNTING SIDE ATTACHMENT
MBPS	MANUAL BYPASS SWITCH
M/M	MULTIPLE TO MULTIPLE TRANSFORMER
Mtg	MOUNTING
MV	MERCURY VAPOR LIGHTING FIXTURE
MVDS	MICROWAVE VEHICLE DETECTION SYSTEM
N	NEUTRAL (GROUNDED CONDUCTOR)
NB	NEUTRAL BUS
NC	NORMALLY CLOSE
NO	NORMALLY OPEN
P	CIRCUIT BREAKER'S POLE
PB	PULL BOX
PBA	PUSH BUTTON ASSEMBLY
PEC	PHOTOELECTRIC CONTROL
Ped	PEDESTRIAN
PEU	PHOTOELECTRIC UNIT
PT	CONDUIT WITH PULL TAPE
PTR	POWER TRANSFER RELAY
RE	RELOCATED EQUIPMENT
RM	RAMP METERING
RWIS	ROADSIDE WEATHER INFORMATION SYSTEM
SB	SLIP BASE
SIC	SIGNAL INTERCONNECT CABLE
Sig	SIGNAL
SMA	SIGNAL MAST ARM
SNS	STREET NAME SIGN
SP	SERVICE POINT
TB	TERMINAL BOARD
TDC	TELEPHONE DEMARCATION CABINET
Temp	TEMPERATURE
TMS	TRAFFIC MONITORING STATION
TOS	TRAFFIC OPERATIONS SYSTEM
UPS	UNINTERRUPTABLE POWER SUPPLY
UPSC	UNINTERRUPTABLE POWER SUPPLY CONTROLLER
Veh	VEHICLE
VIVDS	VIDEO IMAGE VEHICLE DETECTION SYSTEM
Wht	WHITE
WIM	WEIGH-IN-MOTION
Xfmr	TRANSFORMER

SOFFIT AND WALL-MOUNTED LUMINAIRES

- PENDANT SOFFIT LUMINAIRE, 70 W HPS UNLESS OTHERWISE SPECIFIED
- FLUSH-MOUNTED SOFFIT LUMINAIRE, 70 W HPS UNLESS OTHERWISE SPECIFIED
- WALL-MOUNTED LUMINAIRE, 70 W HPS UNLESS OTHERWISE SPECIFIED
- EXISTING SOFFIT OR WALL-MOUNTED LUMINAIRE TO REMAIN UNMODIFIED
- EXISTING SOFFIT OR WALL-MOUNTED LUMINAIRE TO BE MODIFIED AS SPECIFIED

NOTE:
Arrow indicates "street side" of luminaire.

COMMONLY USED SYMBOLS FOR UNITED STATES CUSTOMARY UNITS OF MEASUREMENT:

SYMBOL	DEFINITIONS
Ω	OHMS
min	MINUTE
s	SECOND
bps	BITS PER SECOND
Bps	BYTES PER SECOND
A	AMPERE
V	VOLT
V(dc)	VOLT (DIRECT CURRENT)
V(ac)	VOLT (ALTERNATING CURRENT)
FC	FOOT - CANDLE
W	WATTS
VA	VOLT-AMPERE
M	MEGA
k	KILO
m	MILLI
μ	MICRO
P	PICO
Hz	HERTZ

MISCELLANEOUS ELECTROLIERS

NEW	EXISTING	
		LUMINAIRE ON WOOD POLE
		NON-STANDARD ELECTROLIER (SEE PROJECT LEGEND)
		CITY ELECTROLIER
		ELECTROLIER FOUNDATION (FUTURE INSTALLATION)

NOTES:

1. LED luminaires shall be 235 W when installed on Type 21, 21D, 30, 31 and 32 Standards, unless otherwise specified. LED luminaires shall be 165 W when installed on other type standards or poles, unless otherwise specified.
2. Luminaires shall be the cutoff type, ANSI Type III medium cutoff lighting distribution, unless otherwise specified.

STANDARD ELECTROLIER

NEW	EXISTING	STANDARD TYPE
		15
		15D
		15 STRUCTURE
		15D STRUCTURE
		21
		21D
		21 STRUCTURE
		21D STRUCTURE
		30
		31
		32

STATE OF CALIFORNIA
DEPARTMENT OF TRANSPORTATION

ELECTRICAL SYSTEMS (LEGEND AND ABBREVIATIONS)

NO SCALE

RSP ES-1A DATED OCTOBER 30, 2015 SUPERSEDES RSP ES-1A DATED JULY 19, 2013 AND STANDARD PLAN ES-1A DATED MAY 20, 2011 - PAGE 425 OF THE STANDARD PLANS BOOK DATED 2010.

REVISED STANDARD PLAN RSP ES-1A

2010 REVISED STANDARD PLAN RSP ES-1A

DATE PLOTTED => 28-JUL-2016
TIME PLOTTED => 14:24

Dist	COUNTY	ROUTE	POST MILES TOTAL PROJECT	SHEET No.	TOTAL SHEETS
02	Las, Sie,Las	70, 395	3.5/3.9 R0.0/R3.1,R0.0/R5.6	209	236

Theresa Gabriel
REGISTERED ELECTRICAL ENGINEER

October 30, 2015
PLANS APPROVAL DATE

REGISTERED PROFESSIONAL ENGINEER Theresa Aziz Gabriel No. E15129 Exp. 6-30-16 ELECTRICAL STATE OF CALIFORNIA

THE STATE OF CALIFORNIA OR ITS OFFICERS OR AGENTS SHALL NOT BE RESPONSIBLE FOR THE ACCURACY OR COMPLETENESS OF SCANNED COPIES OF THIS PLAN SHEET.

TO ACCOMPANY PLANS DATED 06-15-16

CONDUIT

NEW	EXISTING	
		LIGHTING CONDUIT, UNLESS OTHERWISE INDICATED OR NOTED
		TRAFFIC SIGNAL CONDUIT
C	c	COMMUNICATION CONDUIT
T	t	TELEPHONE CONDUIT
F	f	FIRE ALARM CONDUIT
FO	fo	FIBER OPTIC CONDUIT
		CONDUIT TERMINATION
R	r	CONDUIT RISER ATTACHED TO THE STRUCTURE OR SERVICE POLE

SERVICE EQUIPMENT

NEW	EXISTING	
OH	oh	OVERHEAD LINES
U	U	WOOD POLE, "U" INDICATES UTILITY OWNED
		POLE GUY WITH ANCHOR
		UTILITY TRANSFORMER - GROUND MOUNTED
III	III	SERVICE EQUIPMENT ENCLOSURE TYPE. DOOR INDICATES FRONT OF ENCLOSURE
T	t	TELEPHONE DEMARCATION CABINET

POLE-MOUNTED SERVICE DESIGNATION

TYPE H SERVICE, 28'-10" — TYPE OF INSTALLATION AND POLE HEIGHT ABOVE GRADE

FLASHING BEACON

NEW	EXISTING	
R	R	FLASHING BEACON (ONE VEHICLE SIGNAL HEAD WITH BACKPLATE AND VISOR) "R" INDICATES RED INDICATION, "Y" INDICATES YELLOW INDICATION
Y Y	Y Y	FLASHING BEACON WITH TYPE 15-FBS STANDARD AND A SIGN.
R R	R R	FLASHING BEACON WITH TYPES 9, 9A OR 9B SIGN UNLESS OTHERWISE SPECIFIED OR INDICATED

SIGNAL EQUIPMENT

NEW	EXISTING	
		PEDESTRIAN SIGNAL HEAD
		PUSH BUTTON ASSEMBLY POST
		PEDESTRIAN BARRICADE
		VEHICLE SIGNAL HEAD (WITH BACKPLATE AND 3-SECTIONS: RED, YELLOW AND GREEN)
		VEHICLE SIGNAL HEAD WITH ANGLE VISOR
PV	PV	MODIFICATIONS OF BASIC SYMBOL: "L" INDICATES ALL NON-ARROW SECTIONS LOUVERED "LG" INDICATES LOUVERED GREEN SECTION ONLY "PV" INDICATES ALL 12" SECTIONS PROGRAMMED VISIBILITY "8" INDICATES ALL 8" SECTIONS (ONLY WHEN SPECIFIED)
		VEHICLE SIGNAL HEAD CONSISTING OF RED, YELLOW AND GREEN LEFT ARROW SECTIONS
		VEHICLE SIGNAL HEAD CONSISTING OF RED AND YELLOW SECTIONS WITH AN UP GREEN ARROW SECTION
		VEHICLE SIGNAL HEAD (5 SECTION) CONSISTING OF RED, YELLOW AND GREEN SECTIONS WITH YELLOW AND GREEN RIGHT ARROW SECTIONS
		TYPE 15TS STANDARD WITH VEHICLE SIGNAL HEAD AND LUMINAIRE
		TYPE 21TS STANDARD WITH VEHICLE SIGNAL HEAD AND LUMINAIRE
		STANDARD WITH LUMINAIRE AND SIGNAL MAST ARMS AND ATTACHED VEHICLE SIGNAL HEADS
		TYPE 1 STANDARD WITH ATTACHED VEHICLE SIGNAL HEADS
		STANDARD WITH A SIGNAL MAST ARM, ATTACHED VEHICLE SIGNAL HEADS AND INTERNALLY ILLUMINATED STREET NAME SIGN
		CONTROLLER ASSEMBLY. DOOR INDICATES FRONT OF CABINET

SIGNAL EQUIPMENT Cont

NEW	EXISTING	
		GUARD POST
		TYPE 1 STANDARD WITH RAMP METERING SIGN
		OPTICAL DETECTOR FOR THE EMERGENCY VEHICLE DETECTION

NOTES:

1. All signal sections shall be 12" unless shown otherwise.
2. Signal heads shall be provided with backplates unless shown otherwise.

ILLUMINATED OVERHEAD SIGN

NEW	EXISTING	
		SINGLE POST, SINGLE ILLUMINATED SIGN, BALANCED BUTTERFLY
		SINGLE POST, DOUBLE ILLUMINATED SIGN, BALANCED BUTTERFLY
		SINGLE POST, SINGLE ILLUMINATED SIGN, FULL CANTILEVER
		DOUBLE POST, SINGLE ILLUMINATED SIGN
		SINGLE ILLUMINATED SIGN MOUNTED ON STRUCTURE
		DOUBLE POST, SINGLE ILLUMINATED SIGN WITH ELECTROLIER

STATE OF CALIFORNIA
DEPARTMENT OF TRANSPORTATION

ELECTRICAL SYSTEMS (LEGEND AND ABBREVIATIONS)

NO SCALE

RSP ES-1B DATED OCTOBER 30, 2015 SUPERSEDES RSP ES-1B DATED JULY 19, 2013 AND STANDARD PLAN ES-1B DATED MAY 20, 2011 - PAGE 426 OF THE STANDARD PLANS BOOK DATED 2010.

REVISED STANDARD PLAN RSP ES-1B

2010 REVISED STANDARD PLAN RSP ES-1B

DATE PLOTTED => 28-JUL-2016
TIME PLOTTED => 14:24

Dist	COUNTY	ROUTE	POST MILES TOTAL PROJECT	SHEET No.	TOTAL SHEETS
02	Las, Sie,Las	70, 395	3.5/3.9 R0.0/R3.1,R0.0/R5.6	210	236

Theresa Gabriel
REGISTERED ELECTRICAL ENGINEER

April 15, 2016
PLANS APPROVAL DATE

REGISTERED PROFESSIONAL ENGINEER Theresa Aziz Gabriel No. E15129 Exp. 6-30-16 ELECTRICAL STATE OF CALIFORNIA

THE STATE OF CALIFORNIA OR ITS OFFICERS OR AGENTS SHALL NOT BE RESPONSIBLE FOR THE ACCURACY OR COMPLETENESS OF SCANNED COPIES OF THIS PLAN SHEET.

TO ACCOMPANY PLANS DATED 06-15-16

EQUIPMENT IDENTIFICATION

ILLUMINATED SIGN IDENTIFICATION:

SIGN No. 12345 — SIGN EQUIPMENT IDENTIFICATION CHARACTERS - PLACE ON POST OR STRUCTURE

10 ISL SCI 1.0
- 1.0 — TRANSFORMER RATING (kVA)
- SCI — LIGHTING CONTROL TYPE
- ISL — NUMBER AND TYPE OF FIXTURES

} DO NOT PLACE ON STANDARD OR STRUCTURE

ELECTROLIER OR EQUIPMENT IDENTIFICATION:

L2745 - 15'-0"
- 15'-0" — MAST ARM LENGTH, IF SHOWN. DO NOT PLACE ON STANDARD OR STRUCTURE
- L2745 — EQUIPMENT IDENTIFICATION CHARACTERS - PLACE ON STANDARD OR STRUCTURE. EXISTING EQUIPMENT IDENTIFICATION CHARACTERS ARE SHOWN IN PARENTHESIS

CONDUIT AND CONDUCTOR IDENTIFICATION:

1½"C, 2#10, 15#14, 2 DLC, 12P#18
- 12P#18 — PAIR
- 2#10, 15#14, 2 DLC, 12P#18 — NUMBER AND SIZE OF CONDUCTORS AND CABLES
- 1½"C — SIZE OF CONDUIT IN INCHES

Ø1, Ø2, Ø2P, etc.	TRAFFIC PHASE IDENTIFICATION FOR SIGNALS, DETECTORS AND PHASE DIAGRAMS
1 2 3	LEGEND NUMBERS
A B C	EQUIPMENT, SIGNAL POLES, INSTALLATION OR ITEMS
1 2 3	CONDUIT RUN NUMBERS

SIGNAL AND LIGHTING STANDARD (TYPICAL DESIGNATION):

19A - 3 - 100
- 100 — WIND VELOCITY = 100 mph
- 3 — CASE 3 ARM LOADING
- 19A — STANDARD TYPE
- STANDARD PLAN SHEET NUMBER
- DETAIL, NUMBER, SECTION, TYPE OR ELEVATION

MISCELLANEOUS EQUIPMENT

NEW	EXISTING	
CMS	cms	CHANGEABLE MESSAGE SIGN
		CLOSED CIRCUIT TELEVISION CAMERA
		HIGHWAY ADVISORY RADIO POLE AND ANTENNA
EMS	ems	LED EXTINGUISHABLE MESSAGE SIGN
M V	m v	DETECTION DEVICE M = MICROWAVE SENSOR V = VIDEO IMAGE SENSOR

WIRING DIAGRAM LEGEND

----	EXTERNAL CONDUCTOR
	CONDUCTOR OR BUS
	TIE POINT
	CONTACTOR COIL
	CONTACTOR, NO CONTACT
	TERMINAL BLOCKS
	CONTACTOR, NC CONTACT
	ENCLOSURE BOND
	GROUNDING ELECTRODE
	CIRCUIT BREAKER
R	RECEPTACLE

PULL BOXES

NEW	EXISTING	
		PULL BOX, No. 5 UNLESS OTHERWISE INDICATED OR NOTED
3	9A(21)	PULL BOX, ADDITIONAL DESIGNATIONS OR DESCRIPTIONS

3 No. 3½ PULL BOX
5 No. 5 PULL BOX
6 No. 6 PULL BOX
7 No. 7 PULL BOX (CEILING)
8 No. 8 PULL BOX
9 No. 9 PULL BOX (STRUCTURE)
9A No. 9A PULL BOX (STRUCTURE)

(C) COMMUNICATIONS PULL BOX
(E) PULL BOX WITH EXTENSION
(S) SPRINKLER CONTROL PULL BOX
(21) ANCHOR BOLTS AND CONDUIT FOR FUTURE INSTALLATION OF TYPE 21 STANDARD
(T) TRAFFIC PULL BOX

VEHICLE DETECTORS

5 J 9 U
- U — VEHICLE DETECTOR DESIGNATION
- U = UPPER, L = LOWER
- 9 — SLOT NUMBER IN INPUT FILE
- J — INPUT FILE (I OR J)
- 5 — PHASE

NEW	EXISTING	
		TYPE A LOOP DETECTOR. OUTLINE OF SAW CUT SHOWN
		TYPE B LOOP DETECTOR. OUTLINE OF SAW CUT SHOWN
		TYPE C LOOP DETECTOR. OUTLINE OF SAW CUT SHOWN
		TYPE D LOOP DETECTOR. OUTLINE OF SAW CUT SHOWN
		TYPE E LOOP DETECTOR. OUTLINE OF SAW CUT SHOWN
		TYPE Q LOOP DETECTOR. OUTLINE OF SAW CUT SHOWN
DH	dh	DETECTOR HANDHOLE
		MICROWAVE OR VIDEO DETECTION ZONE

STATE OF CALIFORNIA
DEPARTMENT OF TRANSPORTATION

ELECTRICAL SYSTEMS (LEGEND AND ABBREVIATIONS)

NO SCALE

RSP ES-1C DATED APRIL 15, 2016 SUPERSEDES RSP ES-1C DATED OCTOBER 30, 2015 AND RSP ES-1C DATED JULY 19, 2013 AND STANDARD PLAN ES-1C DATED MAY 20, 2011 - PAGE 427 OF THE STANDARD PLANS BOOK DATED 2010.

REVISED STANDARD PLAN RSP ES-1C

2010 REVISED STANDARD PLAN RSP ES-1C

DATE PLOTTED => 28-JUL-2016
TIME PLOTTED => 14:24

Dist	COUNTY	ROUTE	POST MILES TOTAL PROJECT	SHEET No.	TOTAL SHEETS
02	Las, Sie,Las	70, 395	3.5/3.9 R0.0/R3.1,R0.0/R5.6	211	236

Theresa Gabriel
REGISTERED ELECTRICAL ENGINEER

October 30, 2015
PLANS APPROVAL DATE

REGISTERED PROFESSIONAL ENGINEER Theresa Aziz Gabriel No. E15129 Exp. 6-30-16 ELECTRICAL STATE OF CALIFORNIA

THE STATE OF CALIFORNIA OR ITS OFFICERS OR AGENTS SHALL NOT BE RESPONSIBLE FOR THE ACCURACY OR COMPLETENESS OF SCANNED COPIES OF THIS PLAN SHEET.

TO ACCOMPANY PLANS DATED 06-15-16

2010 REVISED STANDARD PLAN RSP ES-2A

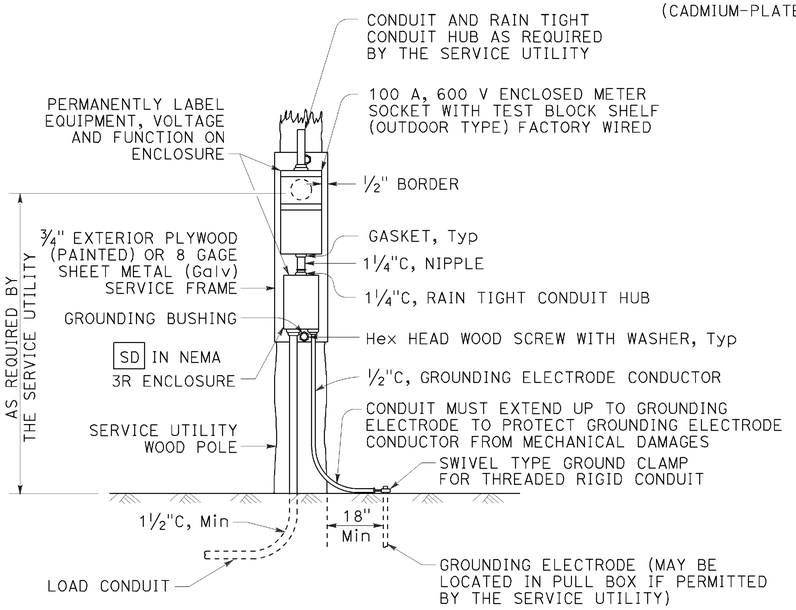

TYPE SCE-1
DETAIL A

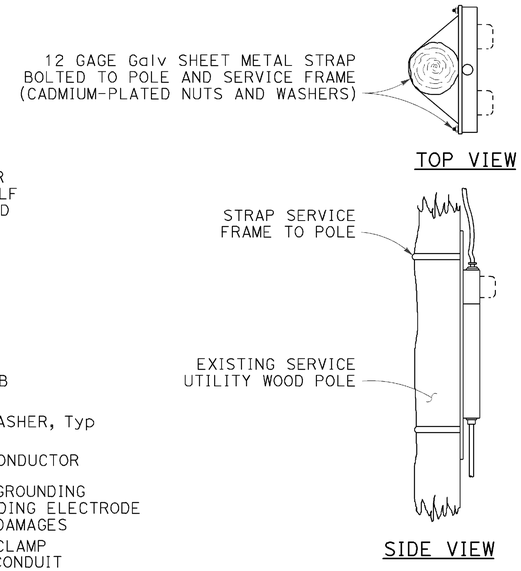

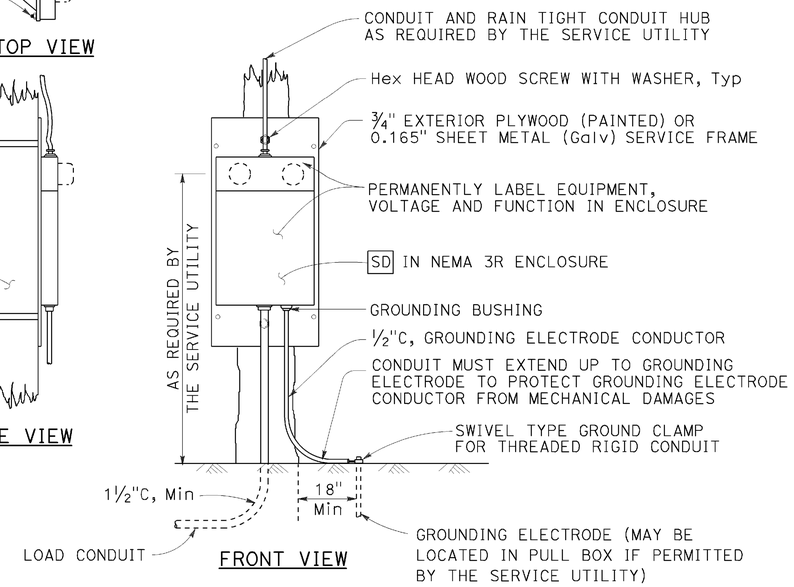

TYPE SCE-2
DETAIL B

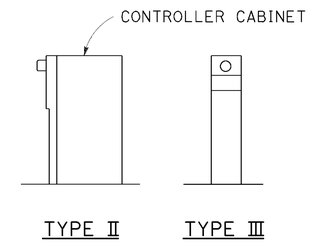

TYPE OF SERVICE (TYPICAL)
DETAIL C

See Notes 1 and 2

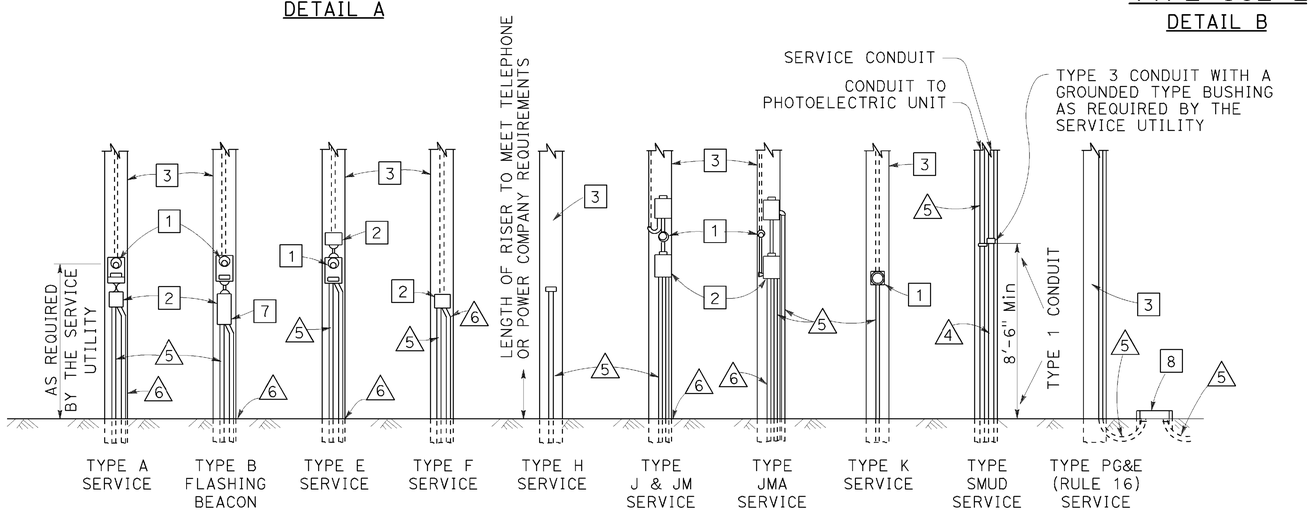

POLE MOUNTED SERVICE INSTALLATIONS
DETAIL D

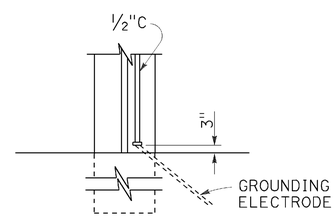

TYPE A
See Note 3

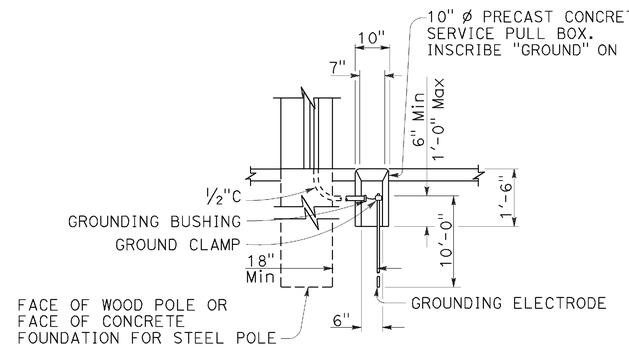

TYPE B
See Note 4

SERVICE GROUNDING
DETAIL E

LEGEND:

1. METER SOCKET.
2. SERVICE ENCLOSURE WITH A MINIMUM 60 A RATED MAIN CIRCUIT BREAKER, UNLESS OTHERWISE SHOWN.
3. A. UTILITY OWNED POLE. THE SERVICE UTILITY WILL FURNISH AND INSTALL REQUIRED SERVICE RISER, PEU WITH CONDUCTORS AND OTHER EQUIPMENT AS NEEDED.
   B. STATE OWNED POLE. THE CONTRACTOR SHALL FURNISH AND INSTALL REQUIRED SERVICE RISER AND EQUIPMENT.
4. 2"C, SERVICE CONDUIT MUST HAVE A GROUNDED TYPE BUSHING INSTALLED AT UPPER END OF THE METALLIC POLE RISER CONDUIT. A GROUNDING CONDUCTOR MUST BE ATTACHED TO THE BUSHING, CARRIED THROUGH THE CONDUIT RUN AND ATTACHED TO THE SERVICE EQUIPMENT ENCLOSURE'S GROUNDING ELECTRODE.
5. CONDUIT, LENGTH AND SIZE AS REQUIRED.
6. ½"C, 1#6. SEE DETAIL E.
7. FLASHING BEACON CONTROL ASSEMBLY.
8. SERVICE PULL BOX, No. 5 UNLESS OTHERWISE NOTED, FURNISHED AND INSTALLED BY THE CONTRACTOR. SERVICE UTILITY SHALL DETERMINE THE EXACT LOCATION.

NOTES:

1. Type II service equipment enclosure mounted on the side of a controller cabinet.
2. Type III complete free-standing service equipment enclosure.
3. Ground clamp and required fittings must be accessible. Conduit must extend to protect grounding electrode conductor from mechanical damage.
4. Use where service utility requires 18" clearance between grounding electrode and the pole or service equipment enclosure. Installation shown is for sidewalk or paved areas. In unpaved areas, omit special service pull box and locate ground clamp above ground or locate ground clamp in nearest pull box.

STATE OF CALIFORNIA
DEPARTMENT OF TRANSPORTATION

ELECTRICAL SYSTEMS (SERVICE EQUIPMENT)

NO SCALE

RSP ES-2A DATED OCTOBER 30, 2015 SUPERSEDES STANDARD PLAN ES-2A DATED MAY 20, 2011 - PAGE 428 OF THE STANDARD PLANS BOOK DATED 2010.

REVISED STANDARD PLAN RSP ES-2A

DATE PLOTTED => 28-JUL-2016
TIME PLOTTED => 14:25

Dist	COUNTY	ROUTE	POST MILES TOTAL PROJECT	SHEET No.	TOTAL SHEETS
02	Las, Sie,Las	70, 395	3.5/3.9 R0.0/R3.1,R0.0/R5.6	212	236

Theresa Gabriel
REGISTERED ELECTRICAL ENGINEER

October 30, 2015
PLANS APPROVAL DATE

REGISTERED PROFESSIONAL ENGINEER
Theresa Aziz Gabriel
No. E15129
Exp. 6-30-16
ELECTRICAL
STATE OF CALIFORNIA

THE STATE OF CALIFORNIA OR ITS OFFICERS OR AGENTS SHALL NOT BE RESPONSIBLE FOR THE ACCURACY OR COMPLETENESS OF SCANNED COPIES OF THIS PLAN SHEET.

TO ACCOMPANY PLANS DATED 06-15-16

2010 REVISED STANDARD PLAN RSP ES-2C

NOTES:

1. The plan shows the approximate location of devices within the enclosure. Components may be rearranged, however, the "working" clearances within the service equipment enclosure shall be maintained.

2. In unpaved areas a raised portland cement concrete pad 2'-0" x 4" x width of foundation shall be constructed in front of new service equipment enclosure installation. Pad shall be set to elevation of foundation.

3. Plug-in circuit breakers may be mounted in the vertical or horizontal position. Cable-in/cable-out circuit breakers shall be mounted in the vertical position.

4. Type III-AF and Type III-BF service equipment enclosures shall have the meter viewing windows located on the front side of the service equipment enclosures.

5. Type III-AR and Type III-BR service equipment enclosure shall be similarly constructed as Type III-AF and Type III-BF respectively, except the meter viewing windows shall be located on the back side of the service equipment enclosures.

STATE OF CALIFORNIA
DEPARTMENT OF TRANSPORTATION

ELECTRICAL SYSTEMS (SERVICE EQUIPMENT ENCLOSURE NOTES TYPE III SERIES)

NO SCALE

RSP ES-2C DATED OCTOBER 30, 2015 SUPERSEDES STANDARD PLAN ES-2C DATED MAY 20, 2011 - PAGE 430 OF THE STANDARD PLANS BOOK DATED 2010.

REVISED STANDARD PLAN RSP ES-2C

DATE PLOTTED => 28-JUL-2016
TIME PLOTTED => 14:25

Dist	COUNTY	ROUTE	POST MILES TOTAL PROJECT	SHEET No.	TOTAL SHEETS
02	Las, Sie,Las	70, 395	3.5/3.9 R0.0/R3.1,R0.0/R5.6	213	236

Theresa Gabriel
REGISTERED ELECTRICAL ENGINEER

October 30, 2015
PLANS APPROVAL DATE

REGISTERED PROFESSIONAL ENGINEER Theresa Aziz Gabriel No. E15129 Exp. 6-30-16 ELECTRICAL STATE OF CALIFORNIA

THE STATE OF CALIFORNIA OR ITS OFFICERS OR AGENTS SHALL NOT BE RESPONSIBLE FOR THE ACCURACY OR COMPLETENESS OF SCANNED COPIES OF THIS PLAN SHEET.

TO ACCOMPANY PLANS DATED 06-15-16

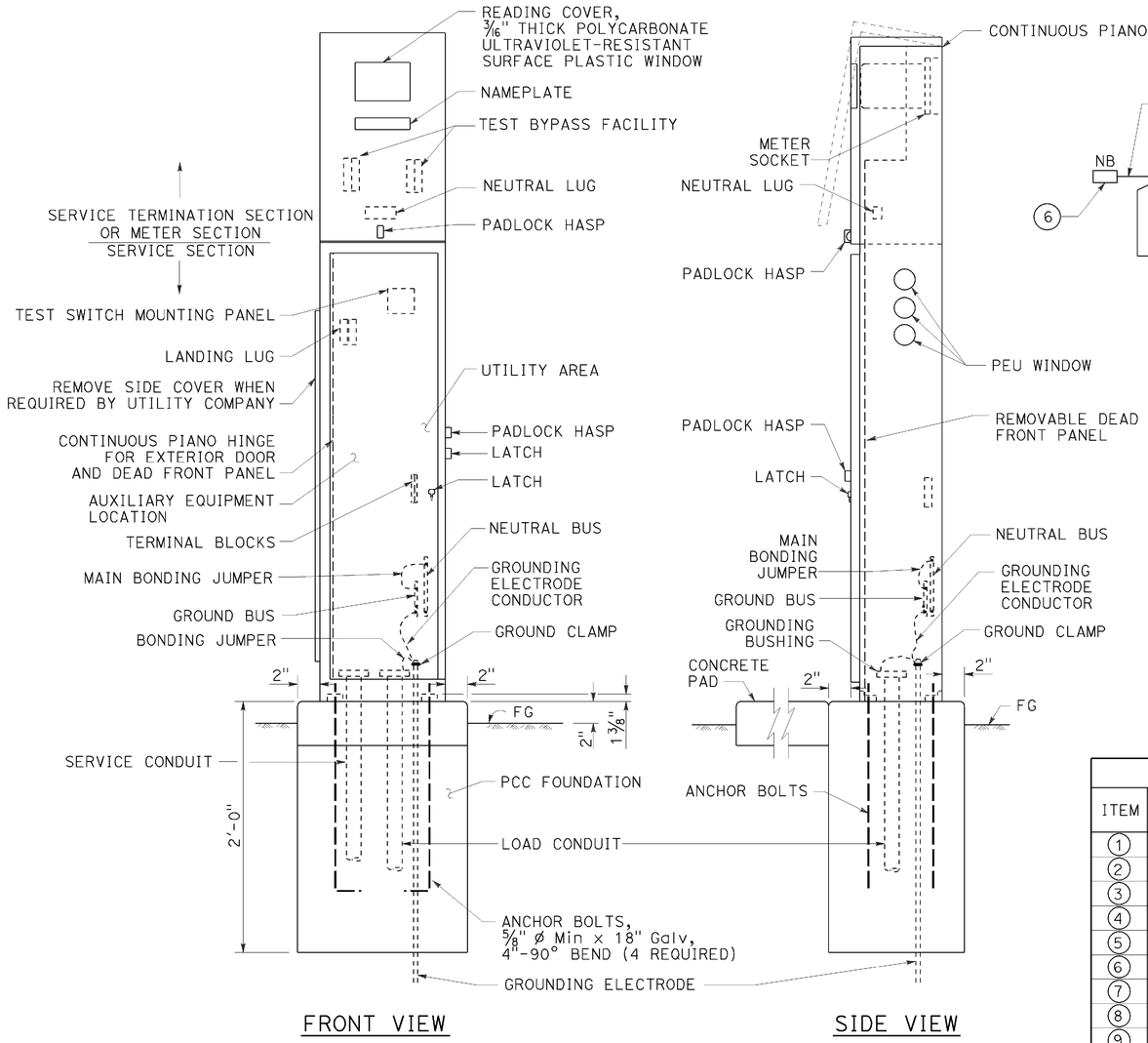

FRONT VIEW

SIDE VIEW

TYPE III-AF SERVICE EQUIPMENT ENCLOSURE (TYPICAL)

DETAIL A

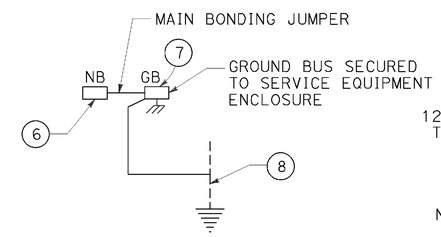

DETAIL D

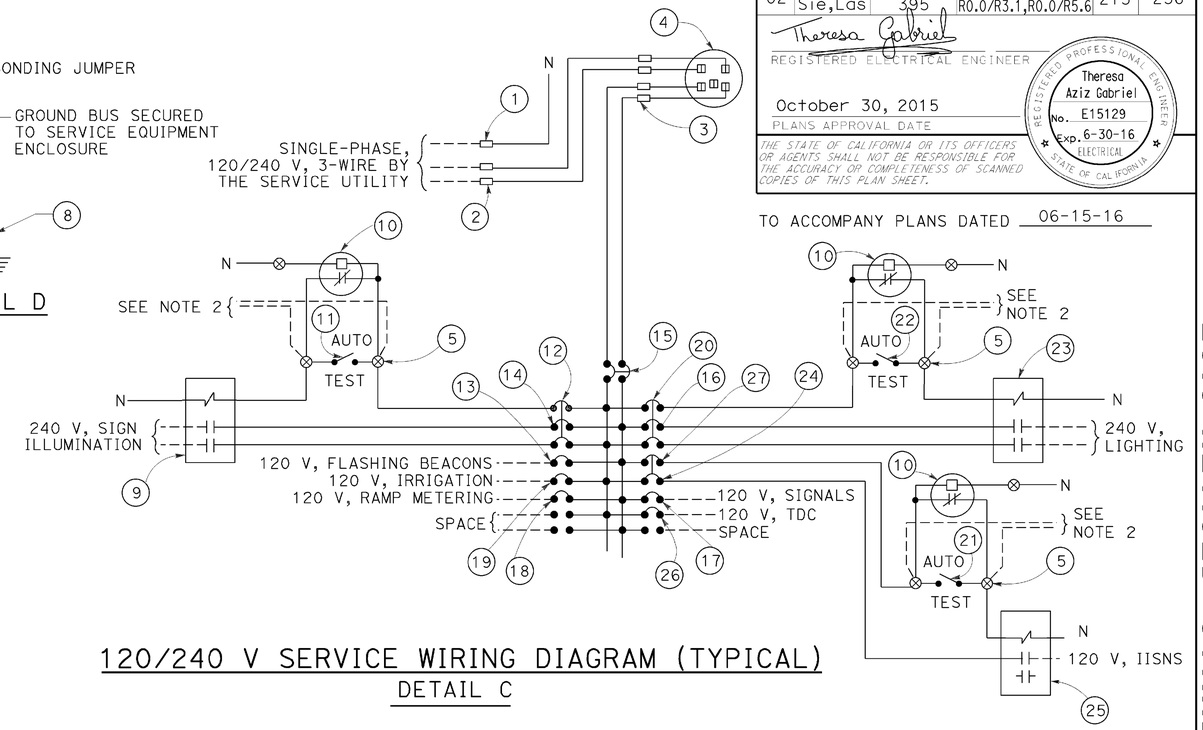

120/240 V SERVICE WIRING DIAGRAM (TYPICAL)

DETAIL C

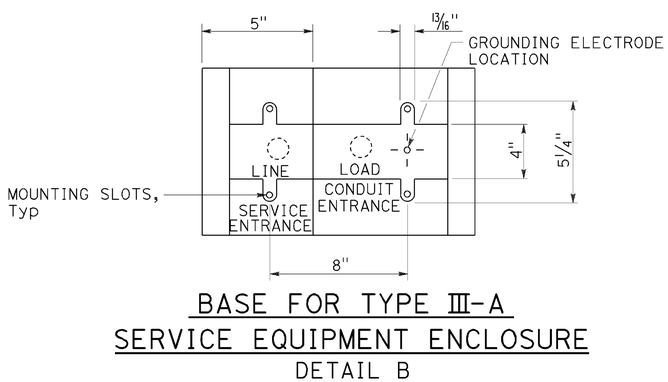

BASE FOR TYPE III-A SERVICE EQUIPMENT ENCLOSURE

DETAIL B

TYPE III-A SERVICE EQUIPMENT ENCLOSURE LEGEND (120/240 V)

ITEM	COMPONENT	NAMEPLATE DESCRIPTION	ITEM	COMPONENT	NAMEPLATE DESCRIPTION
1	NEUTRAL LUG		14	30 A, 240 V, 2P, CB	SIGN ILLUMINATION
2	LANDING LUG		15	100 A, 240 V, 2P, CB	MAIN BREAKER
3	TEST BYPASS FACILITY		16	30 A, 240 V, 2P, CB	LIGHTING
4	METER SOCKET AND SUPPORT		17	50 A, 120 V, 1P, CB	SIGNALS
5	TERMINAL BLOCKS		18	30 A, 120 V, 1P, CB	RAMP METERING
6	NEUTRAL BUS		19	20 A, 120 V, 1P, CB	IRRIGATION
7	GROUND BUS		20	15 A, 120 V, 1P, CB	LIGHTING CONTROL
8	GROUNDING ELECTRODE		21	15 A, 1P, TEST SWITCH	IISNS TEST SWITCH
9	30 A, 2P, NO CONTACTOR	SIGN ILLUMINATION	22	15 A, 1P, TEST SWITCH	LIGHTING TEST SWITCH
10	PHOTOELECTRIC UNIT (NOTE 4)	PEU	23	60 A, 2P, NO CONTACTOR	LIGHTING
11	15 A, 1P, TEST SWITCH	SIGN ILLUMINATION TEST SWITCH	24	15 A, 120 V, 1P, CB	IISNS
12	15 A, 120 V, 1P, CB	SIGN ILLUMINATION CONTROL	25	30 A, 2P, NO CONTACTOR	IISNS
13	15 A, 120 V, 1P, CB	FLASHING BEACON	26	20 A, 120 V, 1P, CB	TELEPHONE DEMARCATION CABINET
			27	15 A, 120 V, 1P, CB	IISNS CONTROL

NOTES:

1. Unless otherwise indicated on the plans, service equipment items shall be provided for each service equipment enclosure as shown.
2. Connect to remote test switch mounted on lighting standards, sign post or structure when required.
3. Items 1 and 6 shall be isolated from the service equipment enclosure.
4. Type V photoelectric control shall be used unless otherwise indicated on the plans.
5. Item 12 , 20 and 27 shall be ganged operated CB.

STATE OF CALIFORNIA
DEPARTMENT OF TRANSPORTATION

ELECTRICAL SYSTEMS (SERVICE EQUIPMENT ENCLOSURE AND TYPICAL WIRING DIAGRAM, TYPE III-A SERIES)

NO SCALE

RSP ES-2D DATED OCTOBER 30, 2015 SUPERSEDES STANDARD PLAN ES-2D DATED MAY 20, 2011 - PAGE 431 OF THE STANDARD PLANS BOOK DATED 2010.

REVISED STANDARD PLAN RSP ES-2D

2010 REVISED STANDARD PLAN RSP ES-2D

DATE PLOTTED => 28-JUL-2016
TIME PLOTTED => 14:26

Dist	COUNTY	ROUTE	POST MILES TOTAL PROJECT	SHEET No.	TOTAL SHEETS
02	Las, Sie,Las	70, 395	3.5/3.9 R0.0/R3.1,R0.0/R5.6	214	236

Theresa Gabriel
REGISTERED ELECTRICAL ENGINEER

April 15, 2016
PLANS APPROVAL DATE

REGISTERED PROFESSIONAL ENGINEER Theresa Aziz Gabriel No. E15129 Exp. 6-30-16 ELECTRICAL STATE OF CALIFORNIA

THE STATE OF CALIFORNIA OR ITS OFFICERS OR AGENTS SHALL NOT BE RESPONSIBLE FOR THE ACCURACY OR COMPLETENESS OF SCANNED COPIES OF THIS PLAN SHEET.

TO ACCOMPANY PLANS DATED 06-15-16

2010 REVISED STANDARD PLAN RSP ES-3B

NOTES:

1. Type G, M, P, R, S and Model 336L cabinets shall be installed with the back toward the nearest lane of traffic.
2. In unpaved areas, a raised portland cement concrete pad shall be constructed in front of each controller cabinet. The pad shall be 3'-0" x 3'-0" x 4" for a Type G cabinet and shall be 3'-0" x 4" thick x width of foundation for Type M, P, R, S and Model 336L cabinets.
3. The steel pedestal, base plate and bolt circle for Type G cabinet shall be the same as that shown for a Type 1-C Standard (see RSP ES-7B). Pedestal shall be 2'-1" to 2'-6" in length. Anchor bolts shall be ¾" ø x 1'-6" with a 2" - 90° bend. Four bolts required per cabinet.
4. Type G cabinet shall be provided with a slipfitter to permit mounting an 4½" outside diameter pedestal. Slipfitter shall be bolted to bottom of the cabinet.
5. A 1" drain shall be provided through the foundation of a Type M or Model 336L cabinet. Drain pipe shall be screened.
6. Cabinet shelves shall be adjustable for vertical spacing and shall be removable. Type M, P, R and S cabinets shall be provided with a minimum of two shelves.
7. Controller units, plug-mounted equipment, shelf-mounted equipment and wall-mounted equipment shall be located to permit safe and easy removal or replacement without removing any other piece of equipment.
8. Where telephone interconnect is required, a minimum of 5" clear vertical space shall be provided inside the cabinet for the equipment.
9. Telephone interconnect conductors shall be enclosed in a ¾"C or larger conduit through the foundation. Type 4 conduit shall be used to separate telephone and power conductors in cabinets or pedestals.
10. Anchor bolts for Type M, P, R, S and Model 336L cabinets shall be ¾" ø x 1'-6" with a 2" - 90° bend.

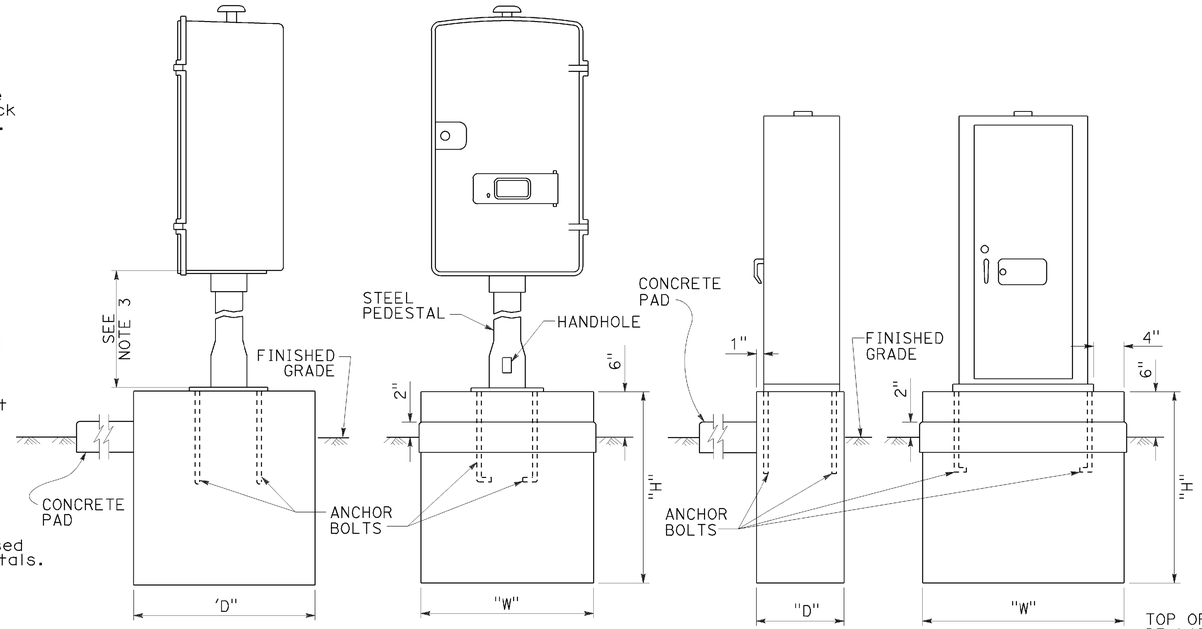

FOUNDATION FOR TYPE G CABINET
DETAIL A

FOUNDATION FOR TYPE P, R AND S CABINETS
DETAIL B

CABINET TYPE	FOUNDATION		
	"W"	"H"	"D"
G	2'-0"	3'-6"	2'-0"
M	3'-2"	2'-6"	1'-6"
P	4'-4½"	1'-6"	2'-4"
R	4'-2"	1'-6"	2'-4"
S	5'-11½"	1'-6"	2'-4"

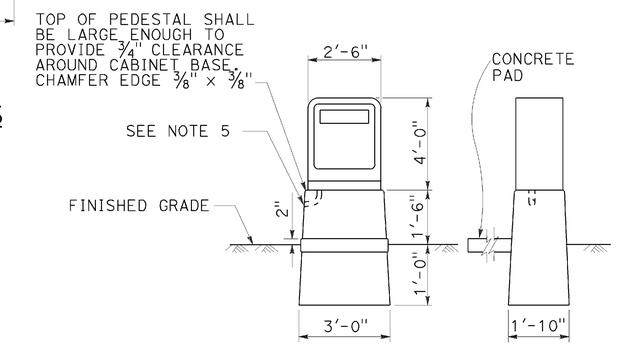

PEDESTAL FOUNDATION FOR TYPE M OR MODEL 336L CABINET
DETAIL C

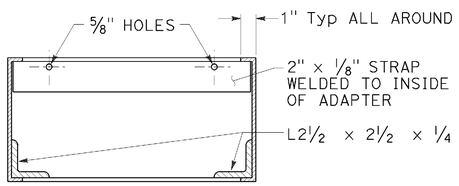

SECTION A-A

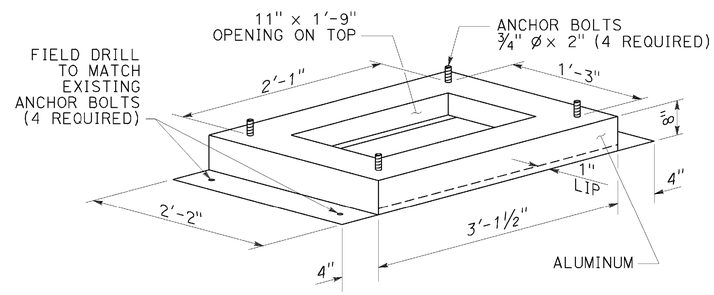

TYPE PR CABINET ADAPTER
See Notes A and B

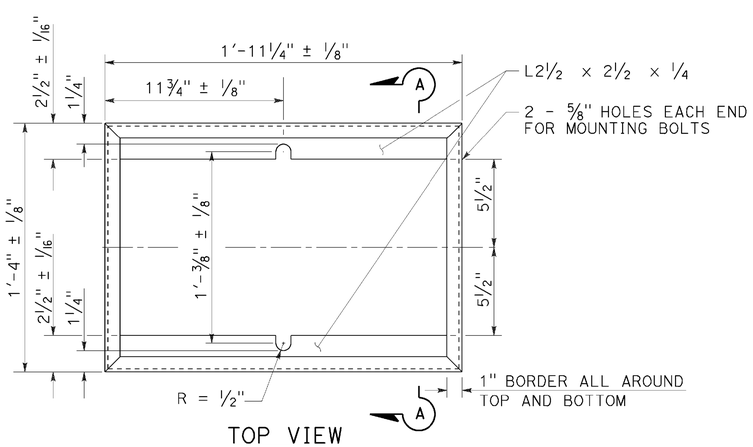

TOP VIEW

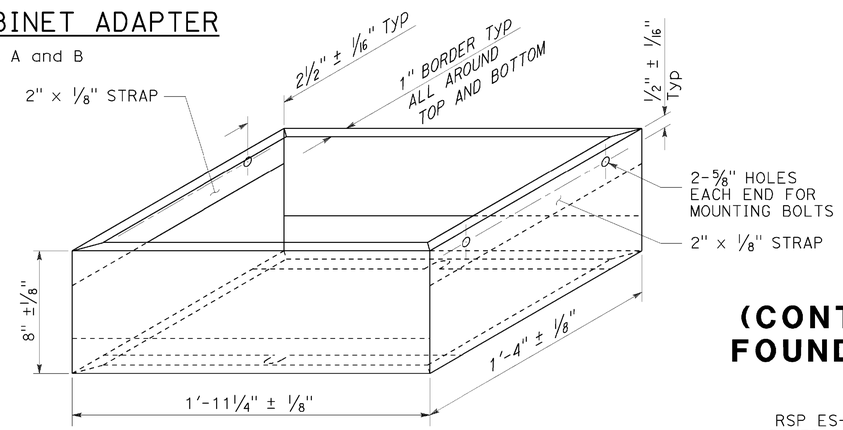

TYPE M CABINET ADAPTER
See Notes A, C, and D

NOTES:

A. Material: 0.188" thickness aluminum plate.
B. Adapter for Type P or Type R cabinet foundation.
C. Adapter for Type M cabinet foundation.
D. Mounting bolts shall be ⅜"ø minimum size.

STATE OF CALIFORNIA
DEPARTMENT OF TRANSPORTATION

ELECTRICAL SYSTEMS (CONTROLLER CABINET ADAPTER, FOUNDATIONS, AND PAD DETAILS)

NO SCALE

RSP ES-3B DATED APRIL 15, 2016 SUPERSEDES RSP ES-3B DATED OCTOBER 30, 2015 AND STANDARD PLAN ES-3B DATED MAY 20, 2011 - PAGE 436 OF THE STANDARD PLANS BOOK DATED 2010.

REVISED STANDARD PLAN RSP ES-3B

DATE PLOTTED => 28-JUL-2016
TIME PLOTTED => 14:26

Dist	COUNTY	ROUTE	POST MILES TOTAL PROJECT	SHEET No.	TOTAL SHEETS
02	Las, Sie,Las	70, 395	3.5/3.9 R0.0/R3.1,R0.0/R5.6	215	236

Theresa Gabriel
REGISTERED ELECTRICAL ENGINEER

April 15, 2016
PLANS APPROVAL DATE

REGISTERED PROFESSIONAL ENGINEER Theresa Aziz Gabriel No. E15129 Exp. 6-30-16 ELECTRICAL STATE OF CALIFORNIA

THE STATE OF CALIFORNIA OR ITS OFFICERS OR AGENTS SHALL NOT BE RESPONSIBLE FOR THE ACCURACY OR COMPLETENESS OF SCANNED COPIES OF THIS PLAN SHEET.

TO ACCOMPANY PLANS DATED 06-15-16

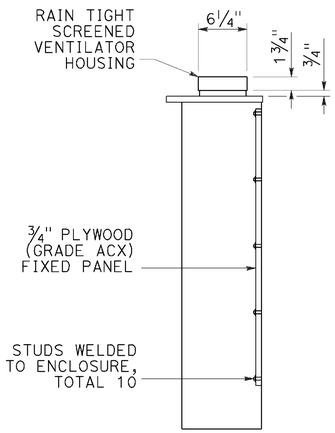

SECTION A-A

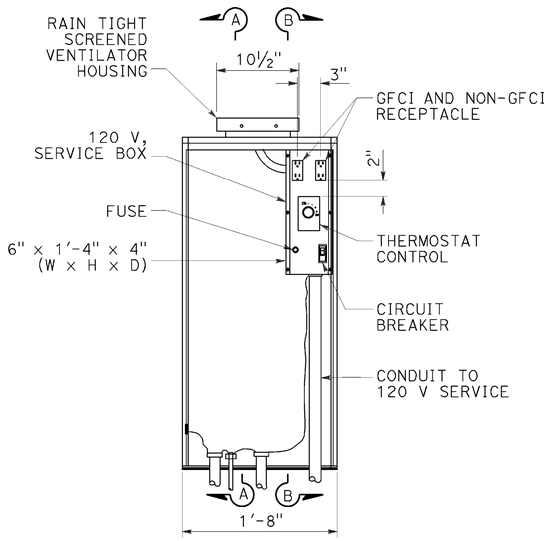

FRONT VIEW

INTERIOR DETAIL A

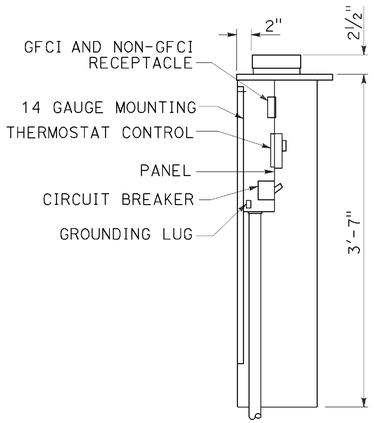

SECTION B-B

NOTE:

1. Dimensions are nominal.

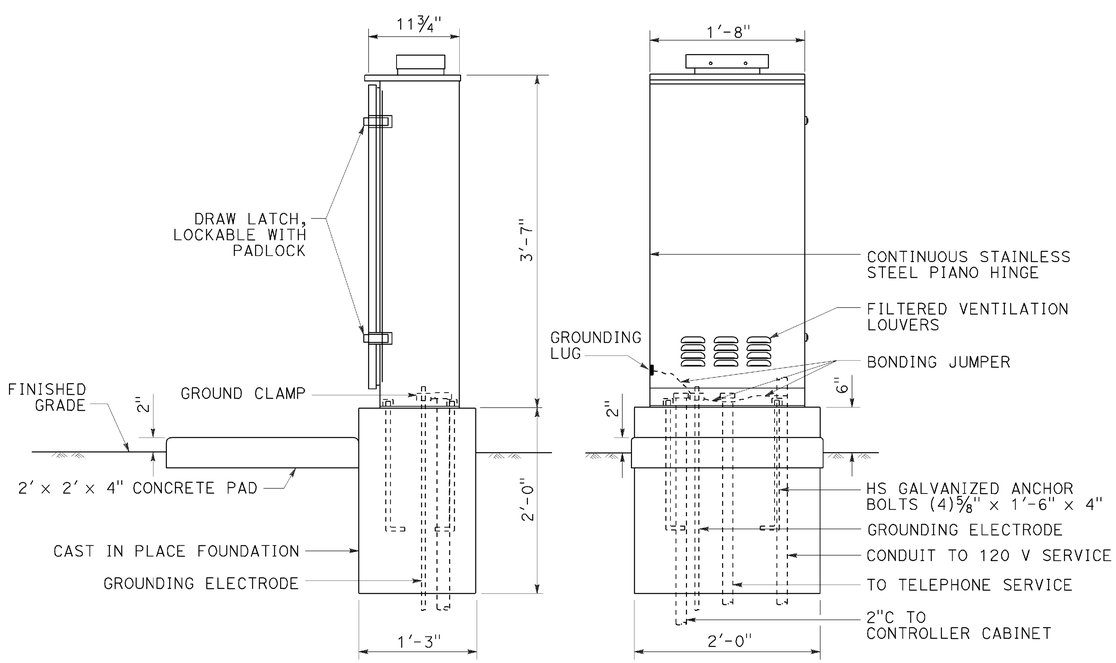

SIDE VIEW FRONT VIEW

EXTERIOR DETAIL B

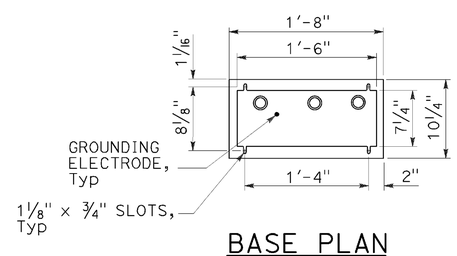

BASE PLAN

DETAIL C

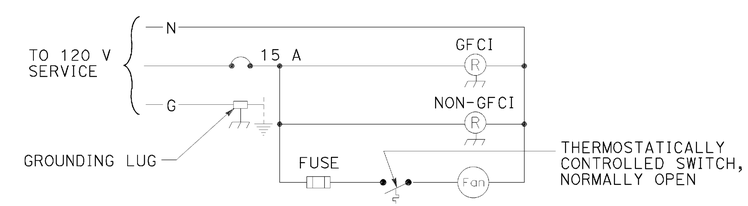

WIRING DIAGRAM

DETAIL D

STATE OF CALIFORNIA
DEPARTMENT OF TRANSPORTATION

ELECTRICAL SYSTEMS (TELEPHONE DEMARCATION CABINET, TYPE B)

NO SCALE

RSP ES-3E DATED APRIL 15, 2016 SUPERSEDES RSP ES-3E DATED OCTOBER 30, 2015 AND STANDARD PLAN ES-3E DATED MAY 20, 2011 - PAGE 439 OF THE STANDARD PLANS BOOK DATED 2010.

REVISED STANDARD PLAN RSP ES-3E

2010 REVISED STANDARD PLAN RSP ES-3E

DATE PLOTTED => 28-JUL-2016
TIME PLOTTED => 14:26

Dist	COUNTY	ROUTE	POST MILES TOTAL PROJECT	SHEET No.	TOTAL SHEETS
02	Las, Sie,Las	70, 395	3.5/3.9 R0.0/R3.1,R0.0/R5.6	216	236

Theresa Gabriel
REGISTERED ELECTRICAL ENGINEER

April 15, 2016
PLANS APPROVAL DATE

REGISTERED PROFESSIONAL ENGINEER Theresa Aziz Gabriel No. E15129 Exp. 6-30-16 ELECTRICAL STATE OF CALIFORNIA

THE STATE OF CALIFORNIA OR ITS OFFICERS OR AGENTS SHALL NOT BE RESPONSIBLE FOR THE ACCURACY OR COMPLETENESS OF SCANNED COPIES OF THIS PLAN SHEET.

TO ACCOMPANY PLANS DATED 06-15-16

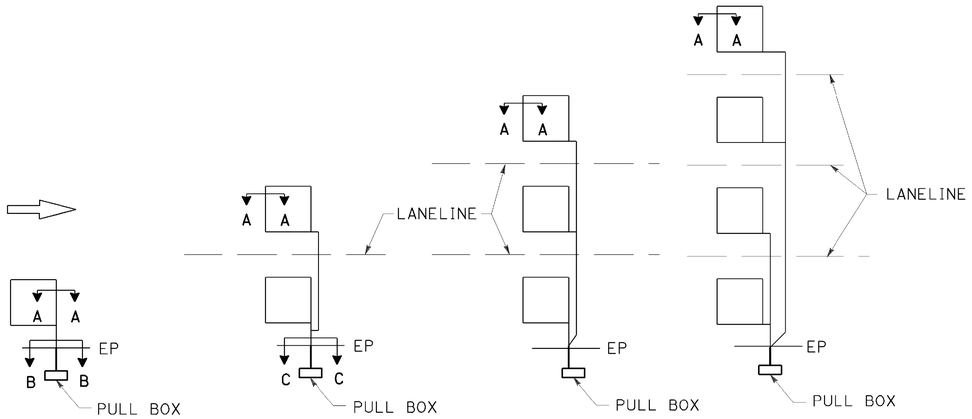

SAW CUT DETAILS

Type A loop detector configurations illustrated

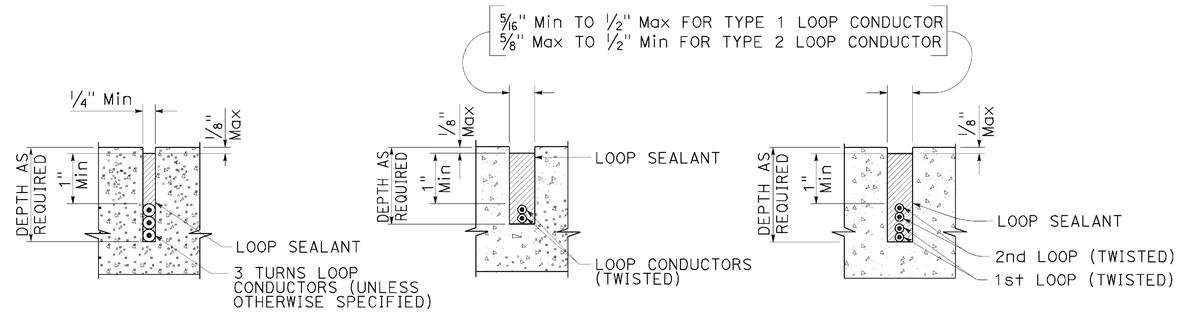

SECTION A-A SECTION B-B SECTION C-C

SLOT DETAILS - TYPE 1 AND TYPE 2 LOOP CONDUCTOR

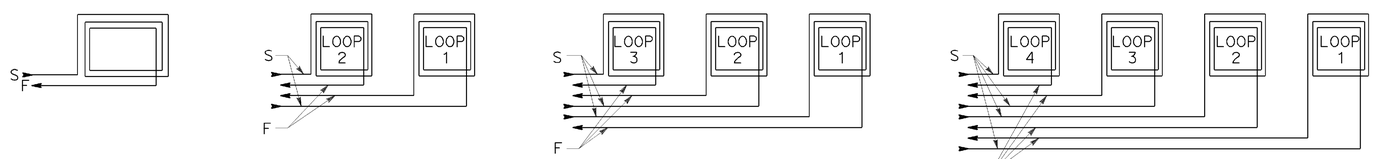

WINDING DETAILS

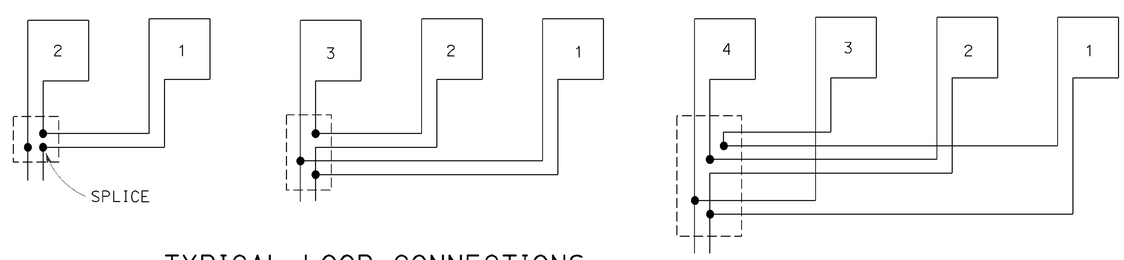

TYPICAL LOOP CONNECTIONS

Dashed lines represent the pull box

ABBREVIATIONS:

S - START
F - FINISH

STATE OF CALIFORNIA
DEPARTMENT OF TRANSPORTATION

ELECTRICAL SYSTEMS (LOOP DETECTORS)

NO SCALE

RSP ES-5A DATED APRIL 15, 2016 SUPERSEDES RSP ES-5A DATED OCTOBER 30, 2015 AND STANDARD PLAN ES-5A DATED MAY 20, 2011 - PAGE 448 OF THE STANDARD PLANS BOOK DATED 2010.

REVISED STANDARD PLAN RSP ES-5A

2010 REVISED STANDARD PLAN RSP ES-5A

DATE PLOTTED => 28-JUL-2016
TIME PLOTTED => 14:27

Dist	COUNTY	ROUTE	POST MILES TOTAL PROJECT	SHEET No.	TOTAL SHEETS
02	Las, Sie,Las	70, 395	3.5/3.9 R0.0/R3.1,R0.0/R5.6	217	236

Theresa Gabriel
REGISTERED ELECTRICAL ENGINEER

April 15, 2016
PLANS APPROVAL DATE

REGISTERED PROFESSIONAL ENGINEER Theresa Aziz Gabriel No. E15129 Exp. 6-30-16 ELECTRICAL STATE OF CALIFORNIA

THE STATE OF CALIFORNIA OR ITS OFFICERS OR AGENTS SHALL NOT BE RESPONSIBLE FOR THE ACCURACY OR COMPLETENESS OF SCANNED COPIES OF THIS PLAN SHEET.

TO ACCOMPANY PLANS DATED 06-15-16

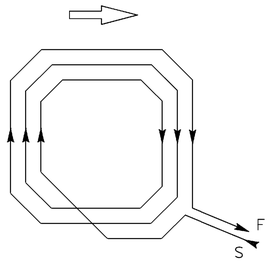

WINDING DETAIL

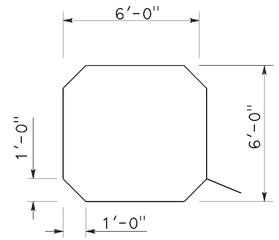

SAW CUT DETAIL

TYPE A LOOP DETECTOR CONFIGURATION

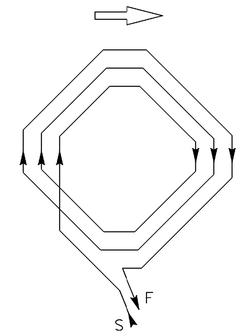

WINDING DETAIL

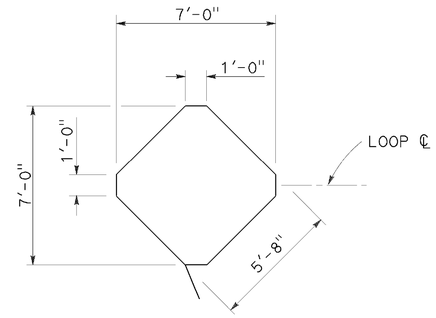

SAW CUT DETAIL

TYPE B LOOP DETECTOR CONFIGURATION

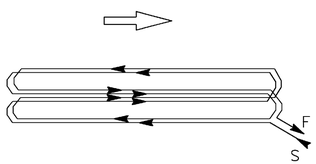

WINDING DETAIL

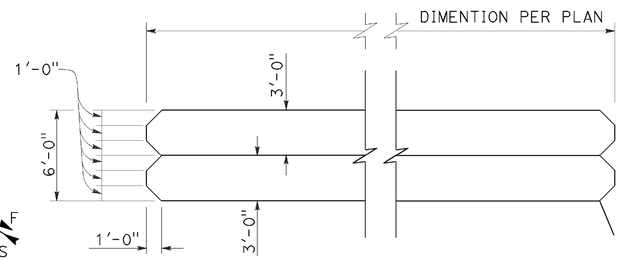

SAW CUT DETAIL

TYPE C LOOP DETECTOR CONFIGURATION

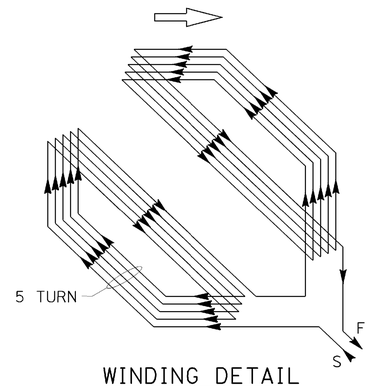

WINDING DETAIL

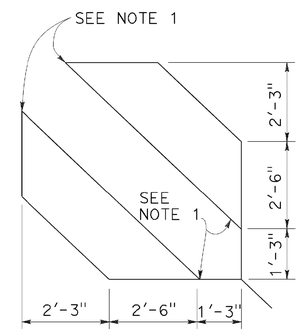

SAW CUT DETAIL

TYPE D LOOP DETECTOR CONFIGURATION

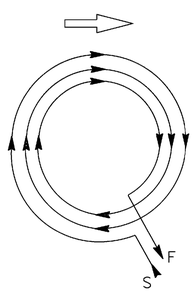

WINDING DETAIL

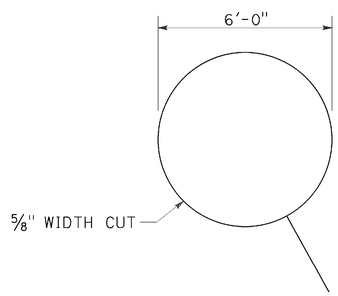

SAW CUT DETAIL

TYPE E LOOP DETECTOR CONFIGURATION

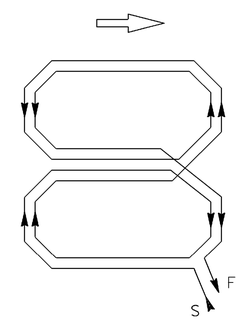

WINDING DETAIL

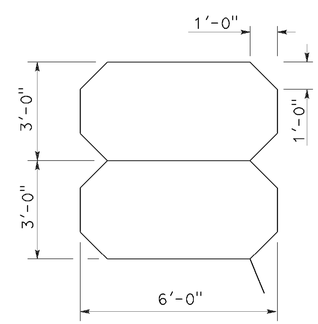

SAW CUT DETAIL

TYPE Q LOOP DETECTOR CONFIGURATION

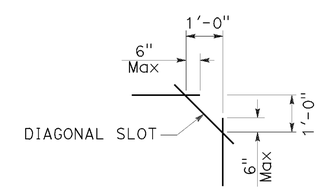

PLAN VIEW OF DIAGONAL SLOT AT CORNERS

NOTES:

1. Round corners of acute angle saw cuts to prevent damage to conductors.
2. Typical distance separating loops from edge to edge is 10' for Type A, B, D and E installation in single lane.
3. Use Type D loops for limit line detection and bicycle lanes.

STATE OF CALIFORNIA
DEPARTMENT OF TRANSPORTATION

ELECTRICAL SYSTEMS (DETECTORS)

NO SCALE

RSP ES-5B DATED APRIL 15, 2016 SUPERSEDES RSP ES-5B DATED OCTOBER 30, 2015 AND RSP ES-5B DATED JULY 19, 2013 AND STANDARD PLAN ES-5B DATED MAY 20, 2011 - PAGE 449 OF THE STANDARD PLANS BOOK DATED 2010.

REVISED STANDARD PLAN RSP ES-5B

2010 REVISED STANDARD PLAN RSP ES-5B

DATE PLOTTED => 28-JUL-2016
TIME PLOTTED => 14:27

Dist	COUNTY	ROUTE	POST MILES TOTAL PROJECT	SHEET No.	TOTAL SHEETS
02	Las, Sie,Las	70, 395	3.5/3.9 R0.0/R3.1,R0.0/R5.6	218	236

Theresa Gabriel
REGISTERED ELECTRICAL ENGINEER

October 30, 2015
PLANS APPROVAL DATE

REGISTERED PROFESSIONAL ENGINEER Theresa Aziz Gabriel No. E15129 Exp. 6-30-16 ELECTRICAL STATE OF CALIFORNIA

THE STATE OF CALIFORNIA OR ITS OFFICERS OR AGENTS SHALL NOT BE RESPONSIBLE FOR THE ACCURACY OR COMPLETENESS OF SCANNED COPIES OF THIS PLAN SHEET.

TO ACCOMPANY PLANS DATED 06-15-16

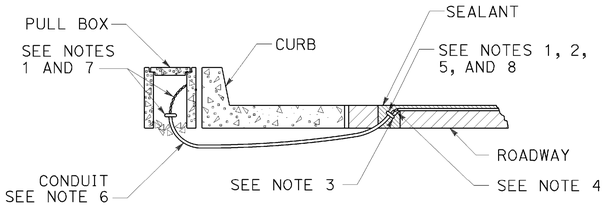

TYPE A
CURB TERMINATION DETAIL

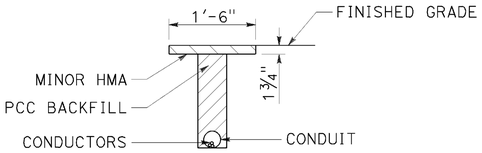

"T" TRENCH
DETAIL T

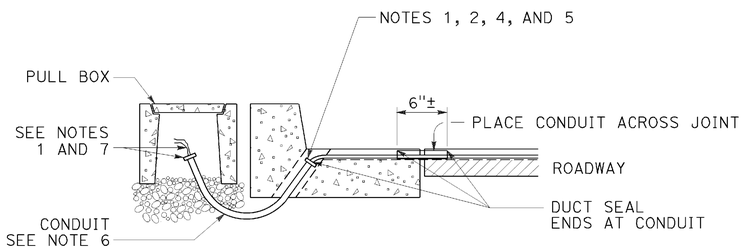

CROSS SECTION

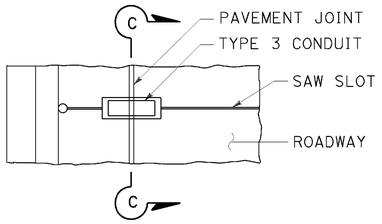

PLAN VIEW

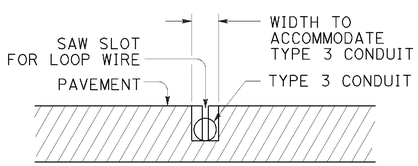

SECTION C-C

TYPE B
CURB TERMINATION DETAIL

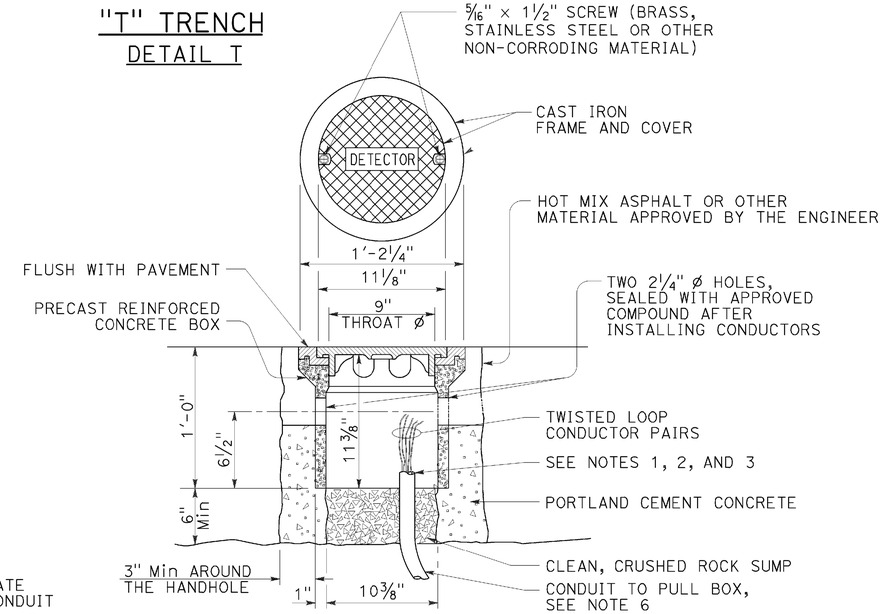

DETECTOR HANDHOLE DETAIL

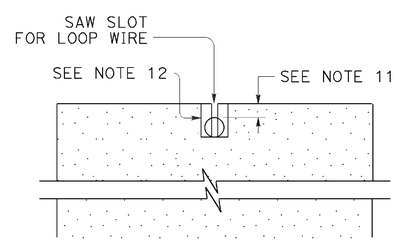

SECTION A-A

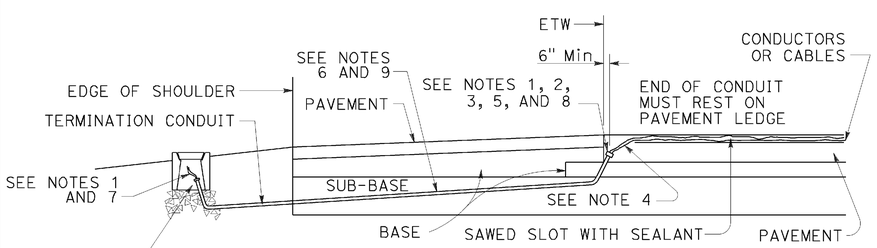

CROSS SECTION

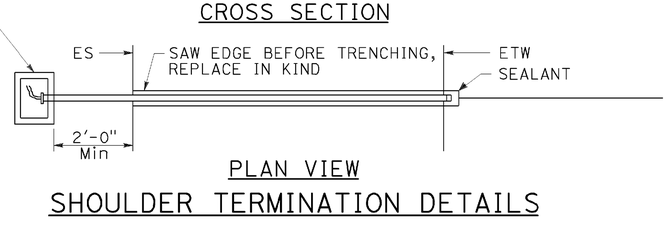

PLAN VIEW

SHOULDER TERMINATION DETAILS

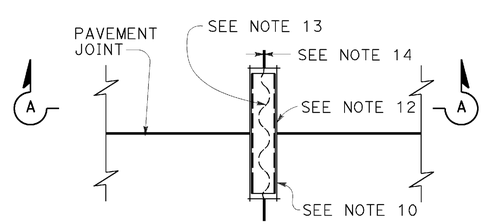

PLAN VIEW

TYPICAL LOOP LEAD-IN DETAIL AT PAVEMENT JOINT

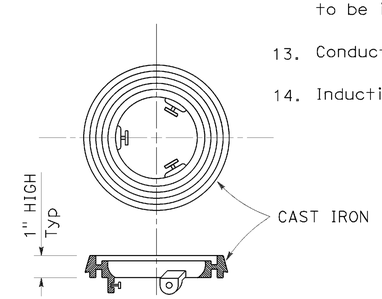

LOCKING GRADE RING

NOTES:

1. Bushing shall be used at end of conduit.
2. Tape detector conductors or cables 3" each side of bushings.
3. Install duct seal compound to each end of termination conduit before installing sealant.
4. Round all sharp edges where detector conductors or cables have to pass.
5. End of conduit shall be 3⅛" below roadway surface.
6.

Conduit size	Loop conductors
1"C minimum	1 to 2 pairs
1½"C minimum	3 to 4 pairs
2"C minimum	5 or more pairs

7. Splice detector conductors or cables to detector lead-in-cable.
8. Location of detector handhole when shown on plans.
9. When the shoulder and traveled way are paved with the same material and there is no joint between them, the conduit shall extend only 2'-0" into the shoulder pavement.
10. ¾"C, Type 3 conduit 6" long minimum, plug both ends with duct compound to keep out sealant.
11. ½" Minimum between top of conduit and pavement surface.
12. Sawcut shall not exceed 1" in width and ⅛" longer than conduit to be installed.
13. Conductors with ½" minimum slack inside conduit.
14. Inductive loop detector saw slot.

STATE OF CALIFORNIA
DEPARTMENT OF TRANSPORTATION

ELECTRICAL SYSTEMS (CURB AND SHOULDER TERMINATION, TRENCH, AND HANDHOLE DETAILS)

NO SCALE

RSP ES-5D DATED OCTOBER 30, 2015 SUPERSEDES RSP ES-5D DATED JULY 19, 2013 AND STANDARD PLAN ES-5D DATED MAY 20, 2011 - PAGE 451 OF THE STANDARD PLANS BOOK DATED 2010.

REVISED STANDARD PLAN RSP ES-5D

2010 REVISED STANDARD PLAN RSP ES-5D

DATE PLOTTED => 28-JUL-2016
TIME PLOTTED => 14:27

Dist	COUNTY	ROUTE	POST MILES TOTAL PROJECT	SHEET No.	TOTAL SHEETS
02	Las, Sie,Las	70, 395	3.5/3.9 R0.0/R3.1,R0.0/R5.6	219	236

REGISTERED CIVIL ENGINEER

July 15, 2016
PLANS APPROVAL DATE

REGISTERED PROFESSIONAL ENGINEER
Stanley P. Johnson
No. C57793
Exp. 3-31-18
CIVIL
STATE OF CALIFORNIA

THE STATE OF CALIFORNIA OR ITS OFFICERS OR AGENTS SHALL NOT BE RESPONSIBLE FOR THE ACCURACY OR COMPLETENESS OF SCANNED COPIES OF THIS PLAN SHEET.

TO ACCOMPANY PLANS DATED 06-15-16

2010 REVISED STANDARD PLAN RSP ES-6E

LUMINAIRE MAST ARM DATA			
PROJECTED LENGTH	THICKNESS	MINIMUM OD AT POLE	MOUNTING HEIGHT
* 6'-0"	0.1196"	3¼"	36'-9"±
* 8'-0"		3½"	37'-3"±
* 10'-0"		3⅞"	38'-0"±
* 12'-0"			39'-0"±
* 15'-0"		4¼"	39'-6"±
** 20'-0"	0.1793"	5"	37'-0"±

* TYPE 30
** TYPE 31

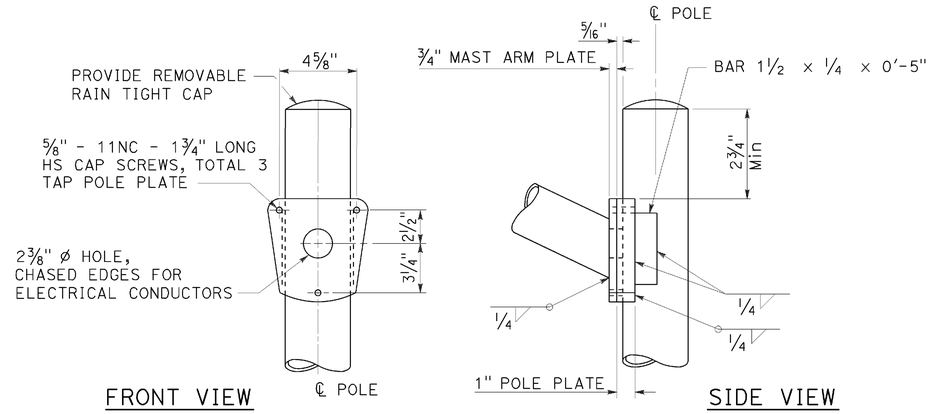

TYPE 30
DETAIL A

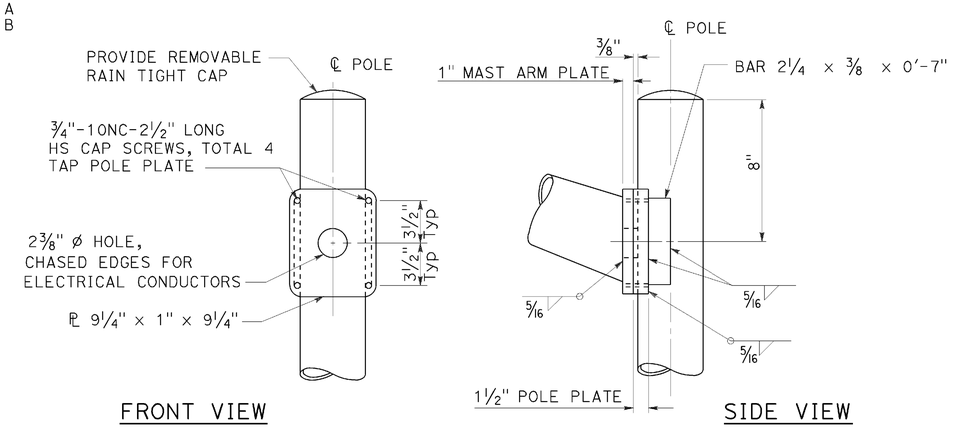

TYPE 31
DETAIL B

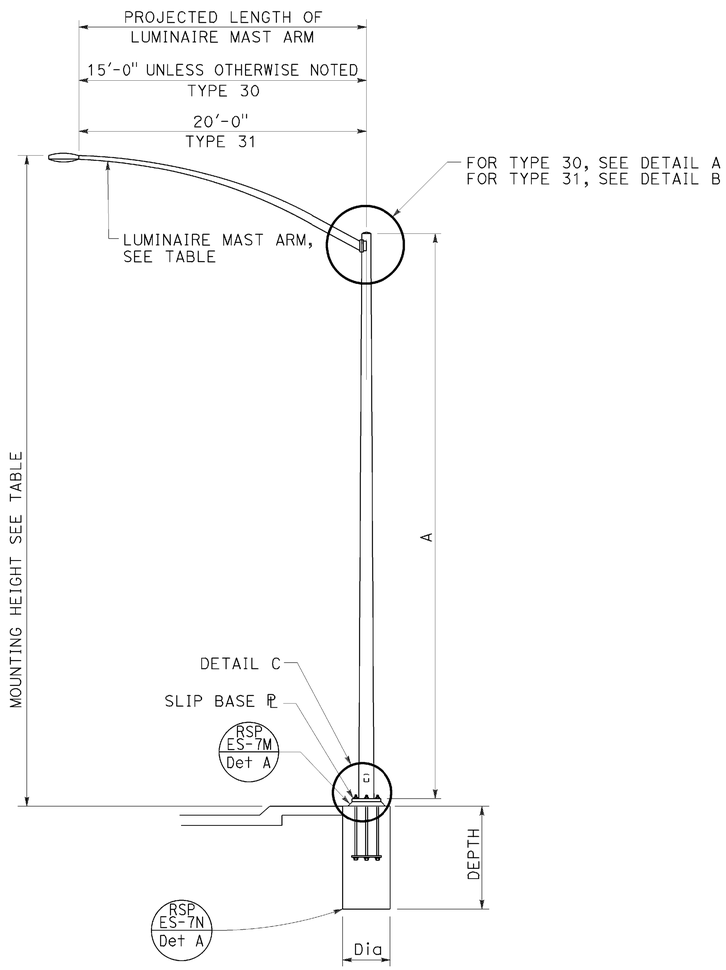

ELEVATION A

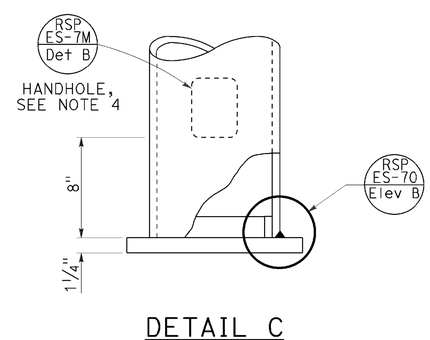

DETAIL C

NOTES:

1. For slip base plate details, see Revised Standard Plan RSP ES-6F.
2. For Type 30 fixed base use Type 15 base plate and foundation shown on Revised Standard Plan RSP ES-6A. Use 1¼" Dia x 3'-6" anchor bolts.
3. For Type 31 fixed base use Type 32 base plate, anchor bolts and foundation on Revised Standard Plan RSP ES-6G.
4. Handhole shall be located on the downstream side of traffic.
5. For additional notes and details, see Revised Standard Plans RSP ES-7M and RSP ES-7N.

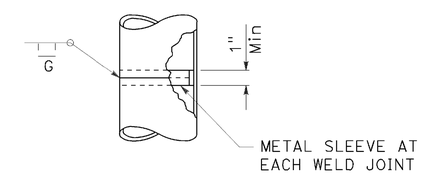

POLE SPLICE

POLE TYPE	POLE DATA				CIDH PILE FOUNDATION	
	A HEIGHT	Min OD BASE	Min OD TOP	Min THICKNESS	Dia	DEPTH
30	35'-0"	8¾"	3 11/16"	0.1196"	2'-6"	7'-0"
31		10¾"	5 11/16"	0.1793"	3'-0"	8'-0"

STATE OF CALIFORNIA
DEPARTMENT OF TRANSPORTATION

ELECTRICAL SYSTEMS (LIGHTING STANDARD, TYPES 30 AND 31)

NO SCALE

RSP ES-6E DATED JULY 15, 2016 SUPERSEDES RSP ES-6E DATED OCTOBER 30, 2015 AND STANDARD PLAN ES-6E DATED MAY 20, 2011 - PAGE 456 OF THE STANDARD PLANS BOOK DATED 2010.

REVISED STANDARD PLAN RSP ES-6E

DATE PLOTTED => 28-JUL-2016
TIME PLOTTED => 14:28

Dist	COUNTY	ROUTE	POST MILES TOTAL PROJECT	SHEET No.	TOTAL SHEETS
02	Las, Sie,Las	70, 395	3.5/3.9 R0.0/R3.1,R0.0/R5.6	220	236

REGISTERED CIVIL ENGINEER

October 30, 2015
PLANS APPROVAL DATE

REGISTERED PROFESSIONAL ENGINEER
Stanley P. Johnson
No. C57793
Exp. 3-31-16
CIVIL
STATE OF CALIFORNIA

THE STATE OF CALIFORNIA OR ITS OFFICERS OR AGENTS SHALL NOT BE RESPONSIBLE FOR THE ACCURACY OR COMPLETENESS OF SCANNED COPIES OF THIS PLAN SHEET.

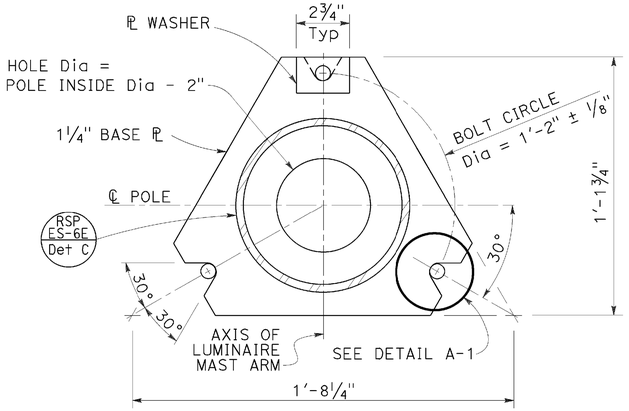

BASE PLATE
DETAIL A

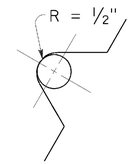

DETAIL A-1

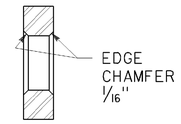

SECTION A-A

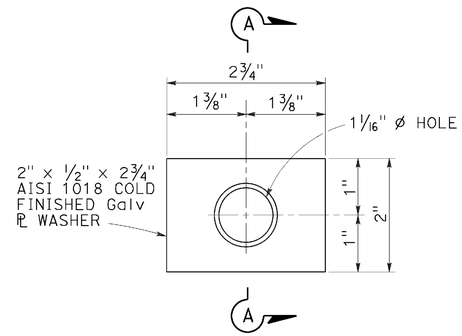

PLATE WASHER
DETAIL D

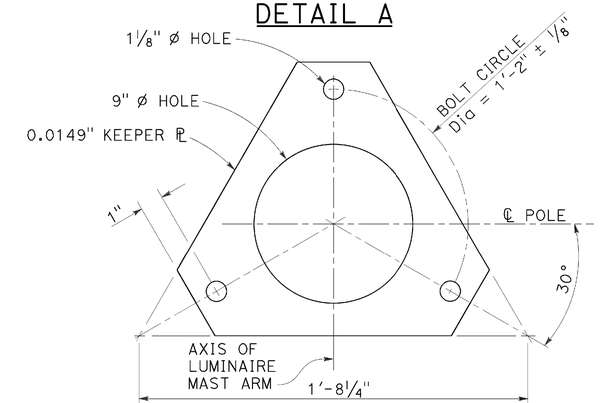

KEEPER PLATE
DETAIL B

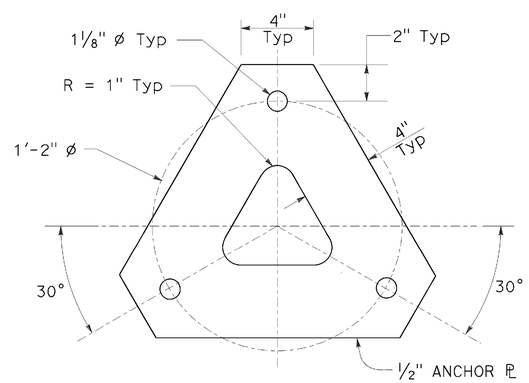

ANCHOR PLATE
DETAIL E

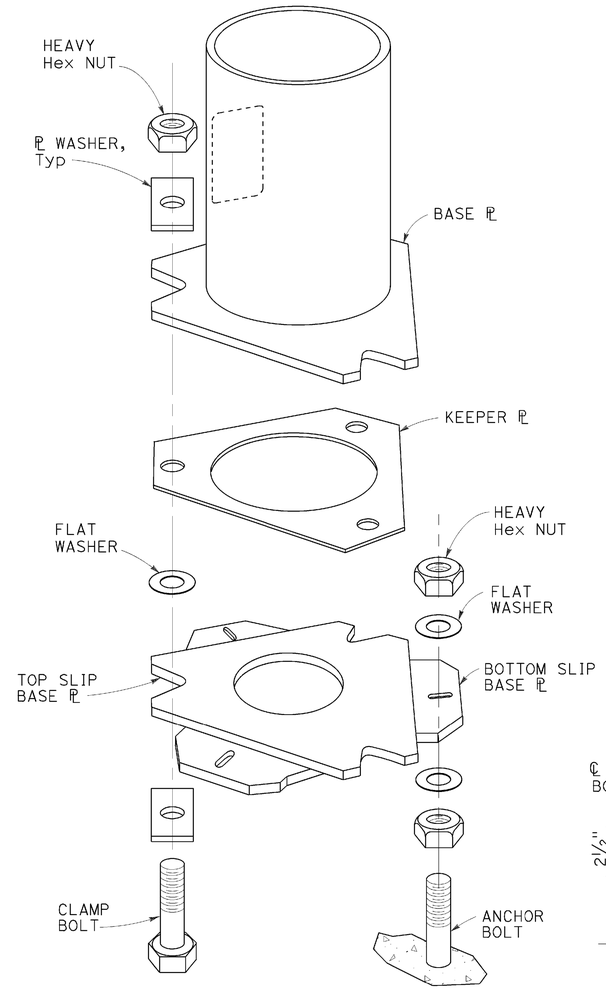

SLIP BASE DETAIL
DETAIL F

NOTES: TO ACCOMPANY PLANS DATED 06-15-16

1. 1" ø HS anchor bolts. For clamp bolts, see specifications.
2. Conduit shall not protrude more than 2" above top of foundation.
3. Handhole shall be located on the downstream side of traffic.
4. For Type 30 fixed base and for Type 31 fixed base, see Notes 3 and 4 on Revised Standard Plan RSP ES-6E.

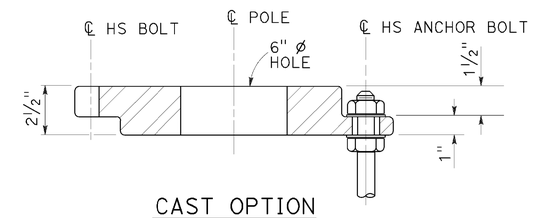

CAST OPTION

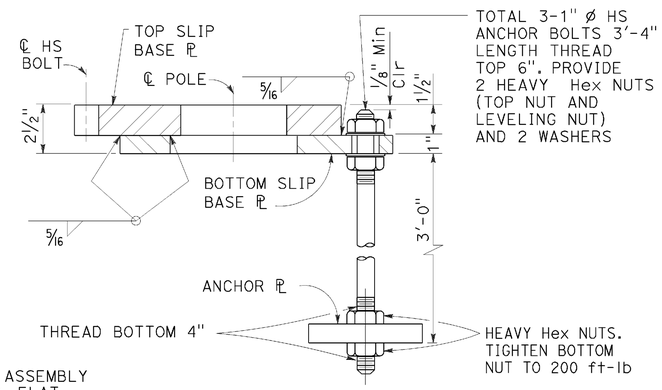

WELDED OPTION

SECTION B-B

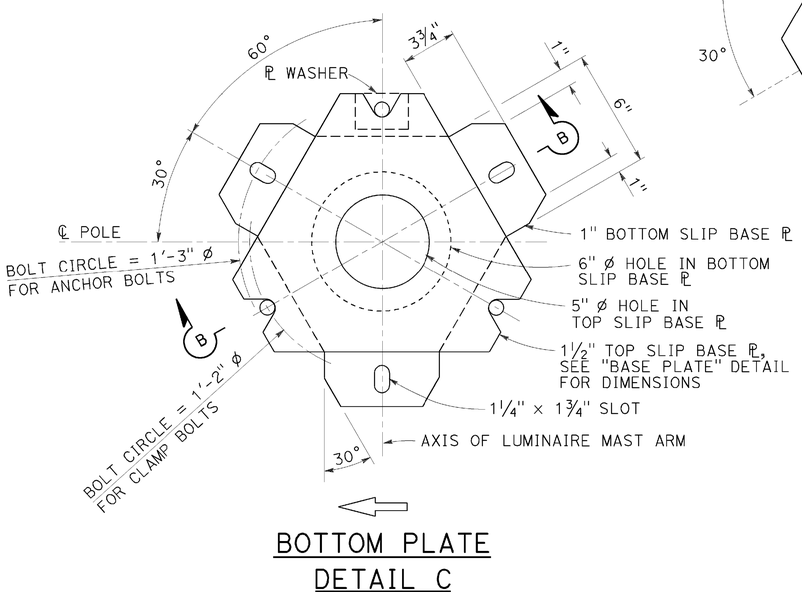

BOTTOM PLATE
DETAIL C

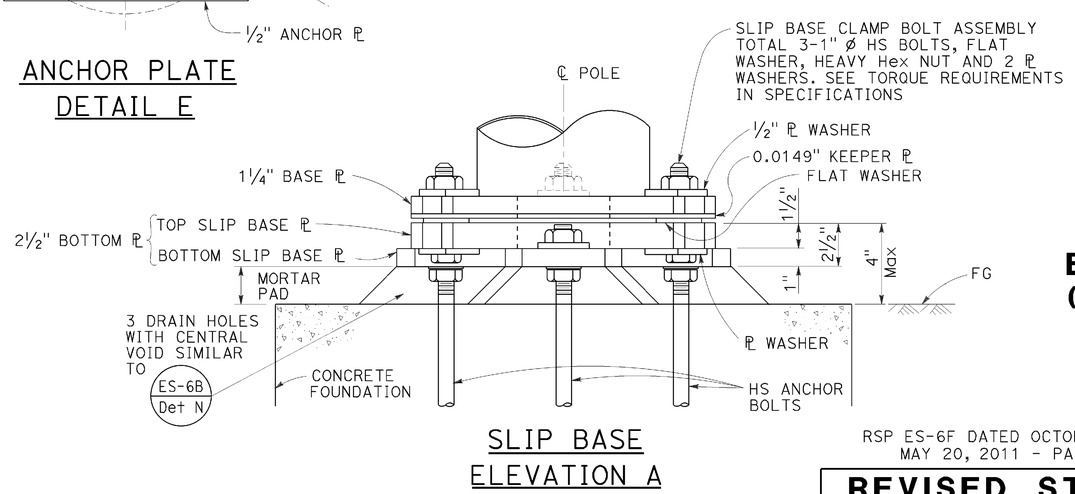

SLIP BASE
ELEVATION A

STATE OF CALIFORNIA
DEPARTMENT OF TRANSPORTATION

ELECTRICAL SYSTEMS (LIGHTING STANDARD, SLIP BASE PLATE)

NO SCALE

RSP ES-6F DATED OCTOBER 30, 2015 SUPERSEDES STANDARD PLAN ES-6F DATED MAY 20, 2011 - PAGE 457 OF THE STANDARD PLANS BOOK DATED 2010.

REVISED STANDARD PLAN RSP ES-6F

2010 REVISED STANDARD PLAN RSP ES-6F

DATE PLOTTED => 28-JUL-2016
TIME PLOTTED => 14:28

Dist	COUNTY	ROUTE	POST MILES TOTAL PROJECT	SHEET No.	TOTAL SHEETS
02	Las, Sie,Las	70, 395	3.5/3.9 R0.0/R3.1,R0.0/R5.6	221	236

REGISTERED CIVIL ENGINEER

July 15, 2016
PLANS APPROVAL DATE

REGISTERED PROFESSIONAL ENGINEER Stanley P. Johnson No. C57793 Exp. 3-31-18 CIVIL STATE OF CALIFORNIA

THE STATE OF CALIFORNIA OR ITS OFFICERS OR AGENTS SHALL NOT BE RESPONSIBLE FOR THE ACCURACY OR COMPLETENESS OF SCANNED COPIES OF THIS PLAN SHEET.

TO ACCOMPANY PLANS DATED 06-15-16

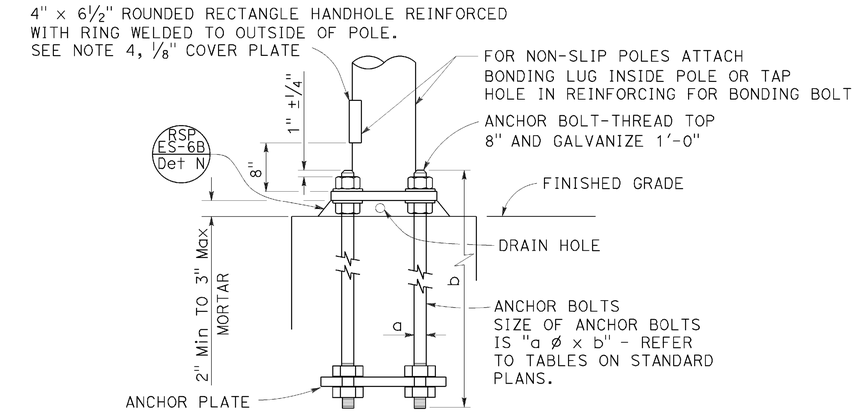

HANDHOLE AND ANCHORAGE
DETAIL A

IDENTIFICATION NUMBER

1. Attach a stamped metal tag with pole's identification number above the handhole. ¼" high number, minimum.
2. Attach a stamped metal tag with mast arm's identification number to the bottom of the signal mast arm near the pole plate. ¼" high number, minimum.

Type — Load case (Use SL for special load case) — Design wind velocity (mph) — Signal mast arm length (ft) {Near handhole: Maximum signal mast arm length for pole type; Near pole plate: Installed signal mast arm length} — Standard plan year — Only for poles or mast arms using Detail F — Only for poles or mast arms using RSP ES-7D

26A - 3 - 100 - 45 - 10 - F or FB

SAMPLE IDENTIFICATION NUMBER

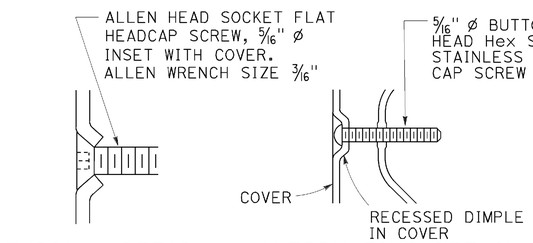

TYPICAL DETAIL
DETAIL B-1

ALTERNATIVE DETAIL
DETAIL B-2

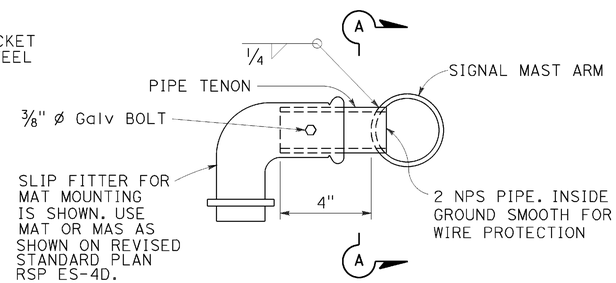

SIDE TENON
DETAIL S-1

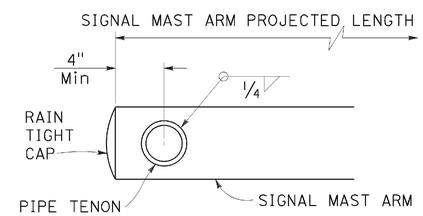

SECTION A-A

PIPE TENONS
DETAIL S

NOTES:

1. Provide a Hex nut, leveling nut and 2 washers for each bolt.
2. Luminaire mast arms shall be round, tapered steel tubes, taper of 0.1375" to 0.143-inch per foot with an end section 2⅜" OD for mounting hardware. Extensions of 2 NPS Standard pipe and 7" long may be used at the option of the manufacturer. When low pressure sodium luminaires are required, the extension shall be 1'-3".
3. Signal mast arms shall be round, tapered steel tubes, maximum taper 0.143-inch per foot.
4. Handhole reinforcement ring shall be ¼" x 2" for 0.1196" to 0.2391" thick poles, ⅜" x 2" for 0.3125" to 0.375" thick poles.
5. Handholes shall be located on the downstream side of traffic.
6. Detail F, fatigue resistant weld, is required at socket welded signal mast arm plate and pole base plate.
7. Cap screws shall be tightened by the turn-of-nut method ⅓ turn from a snug tight condition. No washer will be required.
8. Outside diameter, wall thickness, and corresponding section properties of poles and mast arms as shown in the Standard Plans are minimums. Unless otherwise specified, alternative sections shall require approval by the Engineer.
9. Design: AASHTO Standard Specifications for Structural Support for Highway Signs, Luminaires, and Traffic Signals, 6th Edition. Basic Wind Speed = 100 mph (3 seconds gust). Yearly Mean Wind Velocity = 15.6 mph.
10. Materials (Structural steel):
    fy = 55,000 psi (tapered steel tube and anchor bolts)
    fy = 50,000 psi (unless otherwise noted)
11. Materials (Reinforced concrete):
    f'c = 3,625 psi
    fy = 60,000 psi

WELD SIZE	WALL THICKNESS
3/16"	0.1196"
¼"	0.1793"
5/16"	0.2391"
⅜"	0.3125"
7/16"	0.375"

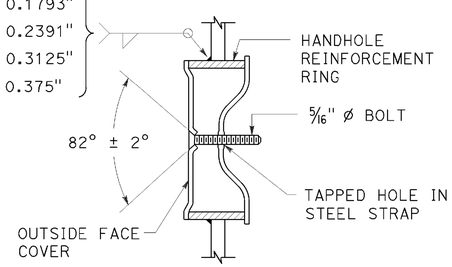

TAMPER RESISTANT HANDHOLE COVER
DETAIL B

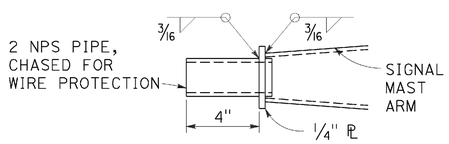

TIP TENON
DETAIL TL

This detail supersedes Detail S when so designated

WELD SIZE	WALL THICKNESS
⅛"	0.1196"
3/16"	0.1793"
¼"	0.2391"

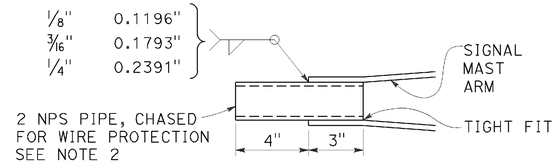

TIP TENON
DETAIL TS

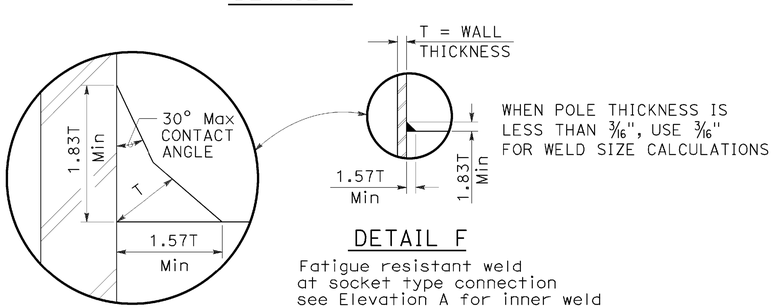

DETAIL F

Fatigue resistant weld at socket type connection see Elevation A for inner weld

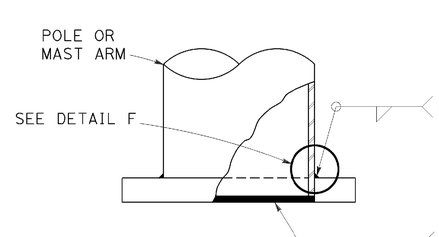

WELD SIZE	WALL THICKNESS
¼"	0.1196"
5/16"	0.1793"
⅜"	0.2391"
7/16"	0.3125"

⅛"	0.1196"
3/16"	0.1793"
¼"	0.2391"
5/16"	0.3125"

ELEVATION A

STATE OF CALIFORNIA
DEPARTMENT OF TRANSPORTATION

ELECTRICAL SYSTEMS (SIGNAL AND LIGHTING STANDARD, DETAIL No. 1)

NO SCALE

RSP ES-7M DATED JULY 15, 2016 SUPERSEDES RSP ES-7M DATED OCTOBER 30, 2015 AND STANDARD PLAN ES-7M DATED MAY 20, 2011 - PAGE 474 OF THE STANDARD PLANS BOOK DATED 2010.

REVISED STANDARD PLAN RSP ES-7M

2010 REVISED STANDARD PLAN RSP ES-7M

DATE PLOTTED => 28-JUL-2016
TIME PLOTTED => 14:29

Dist	COUNTY	ROUTE	POST MILES TOTAL PROJECT	SHEET No.	TOTAL SHEETS
02	Las, Sie,Las	70, 395	3.5/3.9 R0.0/R3.1,R0.0/R5.6	222	236

REGISTERED CIVIL ENGINEER

July 15, 2016
PLANS APPROVAL DATE

REGISTERED PROFESSIONAL ENGINEER Stanley P. Johnson No. C57793 Exp. 3-31-18 CIVIL STATE OF CALIFORNIA

THE STATE OF CALIFORNIA OR ITS OFFICERS OR AGENTS SHALL NOT BE RESPONSIBLE FOR THE ACCURACY OR COMPLETENESS OF SCANNED COPIES OF THIS PLAN SHEET.

TO ACCOMPANY PLANS DATED 06-15-16

2010 REVISED STANDARD PLAN RSP ES-7N

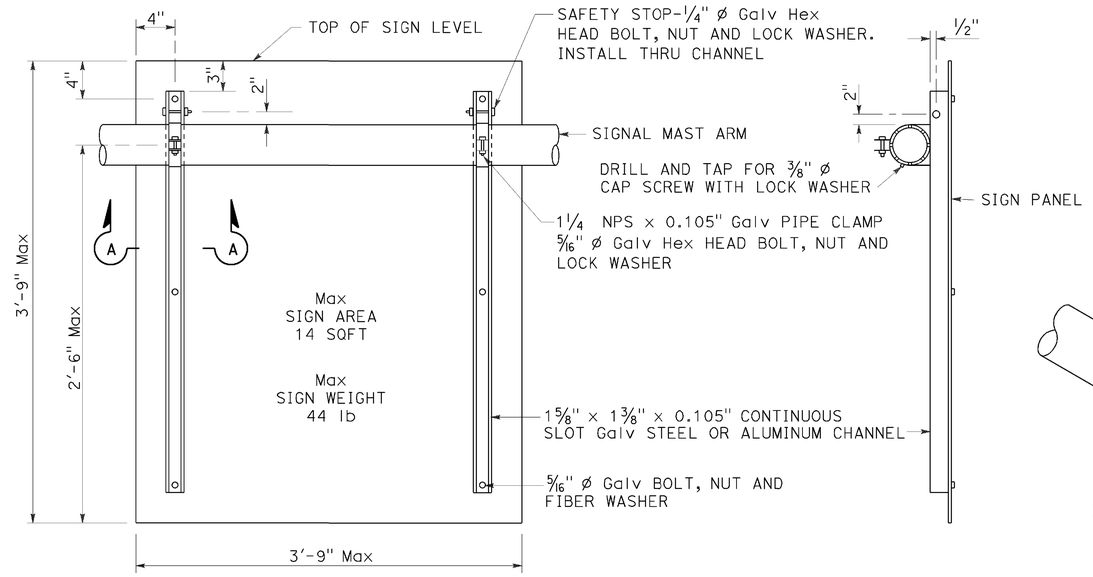

REAR VIEW

SIDE VIEW

SIGN MOUNTING DETAILS
DETAIL U

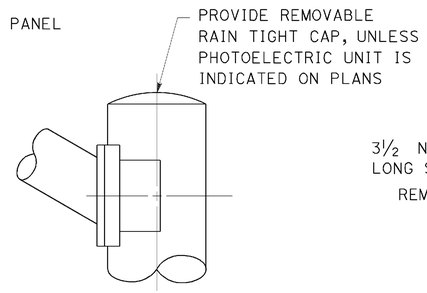

STANDARD TOP
DETAIL B-1

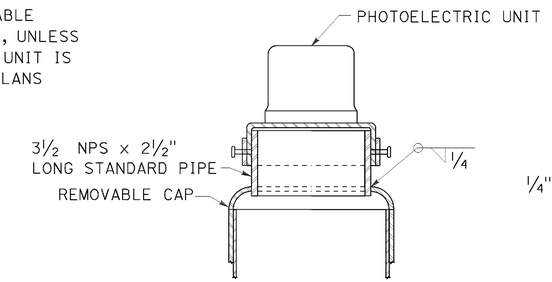

MOUNTING ADAPTER FOR
PHOTOELECTRIC UNIT
DETAIL B-2

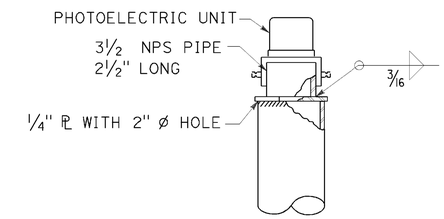

ALTERNATIVE
MOUNTING ADAPTER
DETAIL B-3

POLE TOP DETAILS
DETAIL B

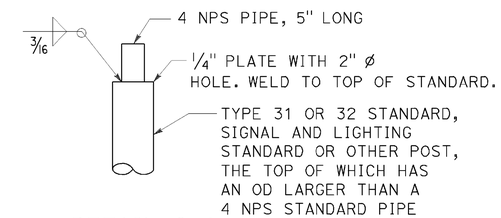

DETAIL C-1

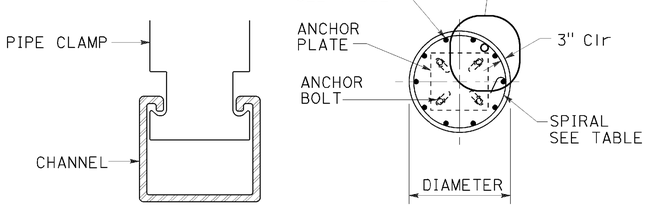

SECTION A-A

SECTION B-B

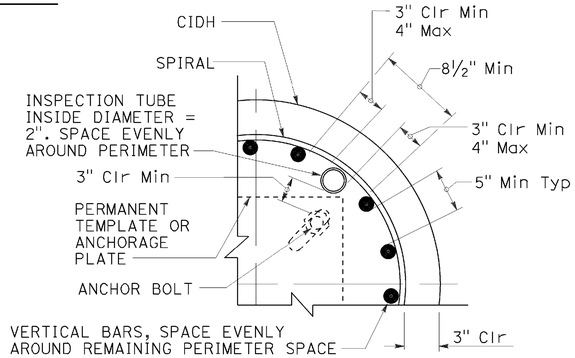

INSPECTION TUBE PLACEMENT
DETAIL I

CIDH REINFORCING AND INSPECTION TUBE SCHEDULE			
CIDH DIAMETER	VERTICAL BARS	SPIRAL	INSPECTION TUBE
2 ft	8-#5	#4 AT 6	2
2.5 ft	10-#6		4*
3 ft	12-#7	#5 AT 6	
3.5 ft	14-#8		4
4 ft	18-#9	2-#4 AT 7	5
4.5 ft	18-#9	2-#5 AT 7	5
5 ft	22-#10	2-#5 AT 7	6
6 ft	26-#11	2-#6 AT 7	7

* FOR SLIP BASE VERSIONS WITH 3 ANCHOR BOLTS USE 3 INSPECTION TUBES.

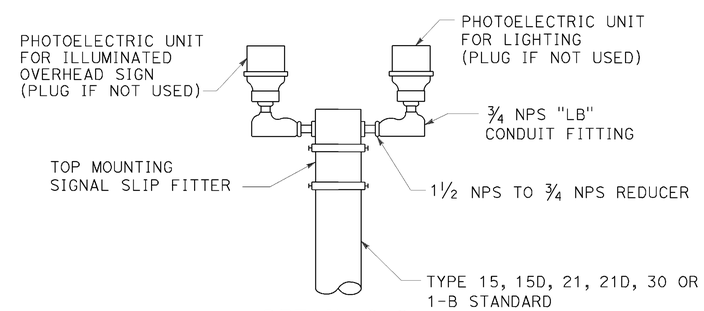

DETAIL C-2

DUAL PHOTOELECTRIC UNIT MOUNTING DETAIL
DETAIL C

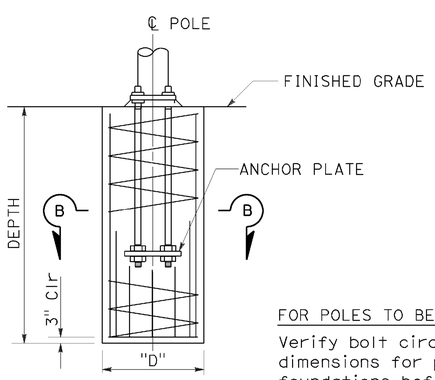

ELEVATION

FOR POLES TO BE INSTALLED ON EXISTING FOUNDATION:

Verify bolt circles, anchor bolt sizes and dependent dimensions for poles to be installed on existing foundations before fabricating the poles.

CAST-IN-DRILLED-HOLE PILE FOUNDATION, REINFORCED PILE
DETAIL A

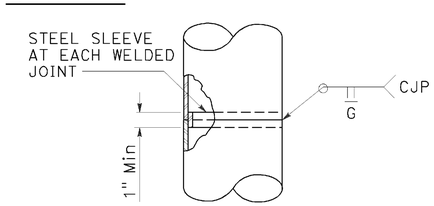

FOR UNIFORM TUBE THICKNESS
DETAIL T-1

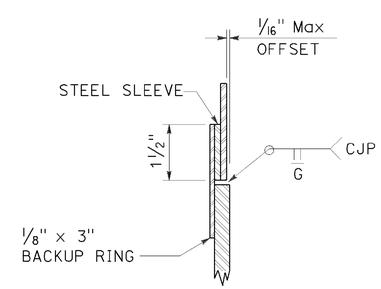

AT TUBE THICKNESS CHANGE
DETAIL T-2

POLE SPLICES
DETAIL T

STATE OF CALIFORNIA
DEPARTMENT OF TRANSPORTATION

ELECTRICAL SYSTEMS (SIGNAL AND LIGHTING STANDARD, DETAIL No. 2)

NO SCALE

RSP ES-7N DATED JULY 15, 2016 SUPERSEDES RSP ES-7N DATED OCTOBER 30, 2015 AND STANDARD PLAN ES-7N DATED MAY 20, 2011 - PAGE 475 OF THE STANDARD PLANS BOOK DATED 2010.

REVISED STANDARD PLAN RSP ES-7N

DATE PLOTTED => 28-JUL-2016
TIME PLOTTED => 14:29

DIST	COUNTY	ROUTE	POST MILES TOTAL PROJECT	SHEET NO.	TOTAL SHEETS
02	Las, Sie,Las	70, 395	3.5/3.9 R0.0/R3.1,R0.0/R5.6	223	236

Theresa Gabriel
REGISTERED ELECTRICAL ENGINEER

April 15, 2016
PLANS APPROVAL DATE

REGISTERED PROFESSIONAL ENGINEER Theresa Aziz Gabriel No. E15129 Exp. 6-30-16 ELECTRICAL STATE OF CALIFORNIA

THE STATE OF CALIFORNIA OR ITS OFFICERS OR AGENTS SHALL NOT BE RESPONSIBLE FOR THE ACCURACY OR COMPLETENESS OF SCANNED COPIES OF THIS PLAN SHEET.

TO ACCOMPANY PLANS DATED 06-15-16

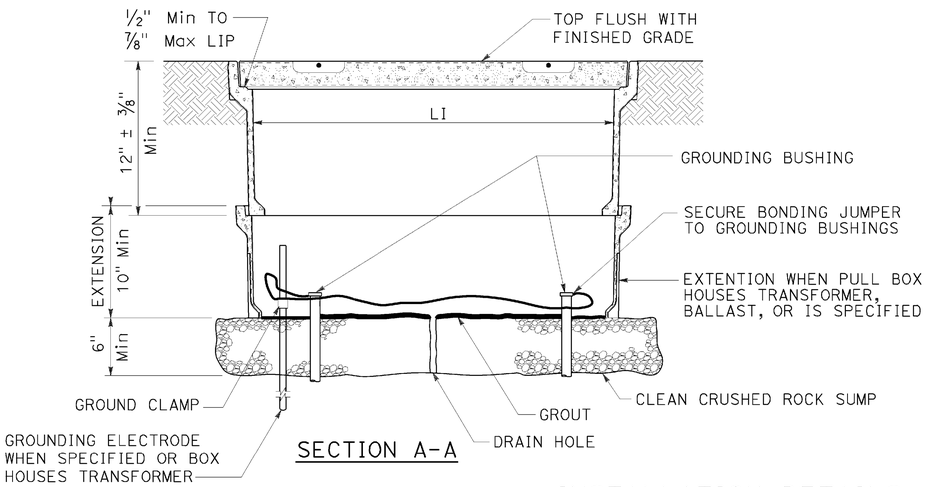

SECTION A-A

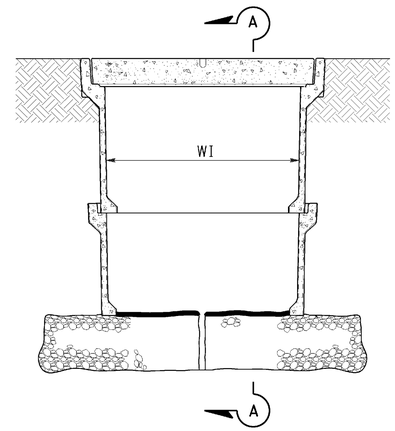

SIDE VIEW

INSTALLATION DETAILS

DETAIL A

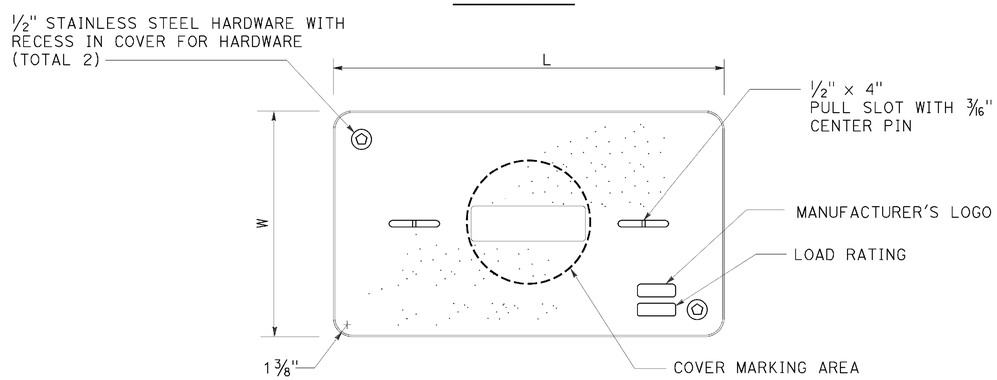

COVER TOP VIEW

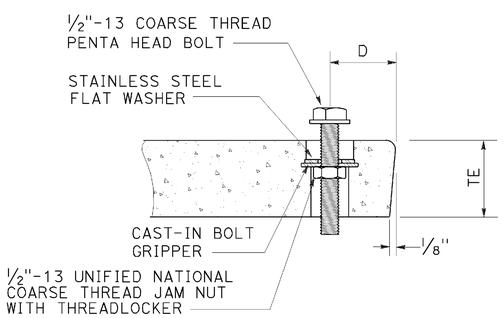

TYPICAL COVER CAPTIVE BOLT

OR SIMILAR

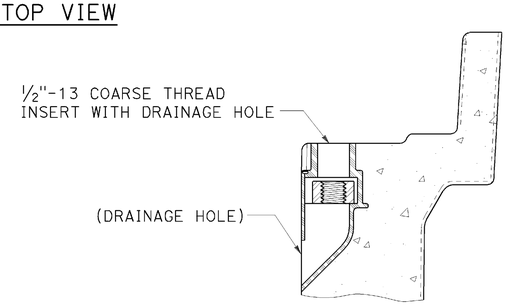

TYPICAL THREADED INSERT

OR SIMILAR

NOTES:

1. The nominal dimensions of the opening in which the cover sets shall be the same as the cover dimensions except the length and width dimensions shall be 1/8" greater.
2. Covers and boxes shall be interchangeable with California standard male and female gages. When interchanged with a standard male or female gage, the top surfaces shall be flush within 1/8". Top outside radius of covers and pull boxes shall have a 1/8" radius.
3. Dimensions for the cover for non-traffic pull box are nominal values.

DIMENSION TABLE

PULL BOX	PULL BOX					COVER				
	MINIMUM DEPTH BOX	MINIMUM DEPTH EXTENSION	MINIMUM WEIGHT	LI Min	WI Min	TE	D	L	W	MINIMUM WEIGHT
No. 3 1/2	12"	N/A	40 lb	1' - 3"	9"	1 3/4"	1 3/4"	1'-3 1/4" - 1'-3 3/8"	10" - 10 1/8"	30 lb
No. 5	12"	10"	55 lb	1' - 8"	11"	2"	1 3/4"	1'-11 1/4"	1'-1 3/4"	60 lb
No. 6	12"	10"	70 lb	2' - 4 1/4"	1' - 3 1/4"	2"	2"	2'-6 1/2"	1'-5 1/2"	85 lb

STATE OF CALIFORNIA
DEPARTMENT OF TRANSPORTATION

ELECTRICAL SYSTEMS (NON-TRAFFIC PULL BOX)

NO SCALE

RSP ES-8A DATED APRIL 15, 2016 SUPERSEDES RSP ES-8A
DATED OCTOBER 30, 2015 AND RSP ES-8A DATED JULY 19, 2013 AND RSP ES-8A
DATED JANUARY 20, 2012 THAT SUPPLEMENTS THE STANDARD PLANS BOOK DATED 2010.

REVISED STANDARD PLAN RSP ES-8A

2010 REVISED STANDARD PLAN RSP ES-8A

DATE PLOTTED => 28-JUL-2016
TIME PLOTTED => 14:30

DIST	COUNTY	ROUTE	POST MILES TOTAL PROJECT	SHEET NO.	TOTAL SHEETS
02	Las, Sie,Las	70, 395	3.5/3.9 R0.0/R3.1,R0.0/R5.6	224	236

Theresa Gabriel
REGISTERED ELECTRICAL ENGINEER

April 15, 2016
PLANS APPROVAL DATE

REGISTERED PROFESSIONAL ENGINEER Theresa Aziz Gabriel No. E15129 Exp. 6-30-16 ELECTRICAL STATE OF CALIFORNIA

THE STATE OF CALIFORNIA OR ITS OFFICERS OR AGENTS SHALL NOT BE RESPONSIBLE FOR THE ACCURACY OR COMPLETENESS OF SCANNED COPIES OF THIS PLAN SHEET.

TO ACCOMPANY PLANS DATED 06-15-16

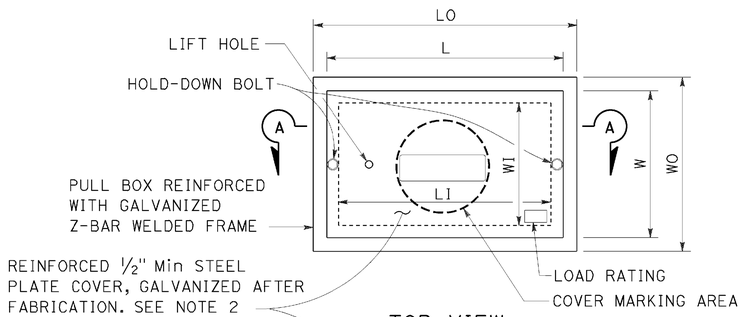

TOP VIEW

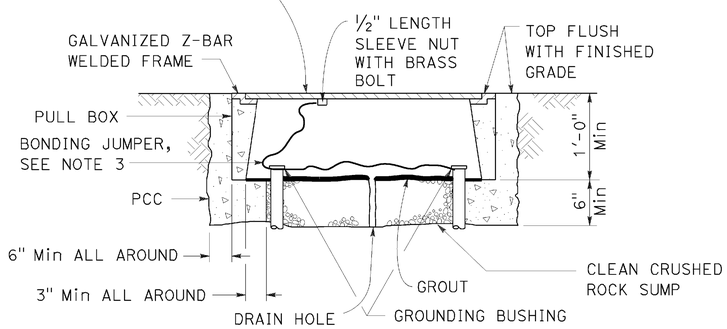

SECTION A-A

No. 3½(T), No. 5(T) AND No. 6(T) TRAFFIC PULL BOX

NOTES:

1. Traffic pull box shall be provided with steel cover and special concrete footing. Steel cover shall have embossed non-skid pattern.
2. Steel reinforcing shall be as regularly used in the standard products of the respective manufacturer.
3. Bonding jumper for metal covers shall be 3' long, minimum.
4. The nominal dimensions of the opening in which the cover sets shall be the same as the cover dimensions except the length and width dimensions shall be ⅛" greater.
5. Covers and boxes shall be interchangeable with California standard male and female gages. When interchanged with a standard male or female gage, the top surfaces shall be flush within ⅛".

DIMENSION TABLE

PULL BOX	PULL BOX						COVER	
	MINIMUM * THICKNESS	MINIMUM DEPTH BOX AND EXTENSION	LO	LI	WO	WI	L **	W **
No. 3½(T)	1½"	1'-0"	1'-10" - 1'-11"	1'-5" - 1'-6½"	1'-3" - 1'-4"	10" - 1'-0"	1'-8" -1'-8½"	1'-1" - 1'-2"
No. 5(T)	1¾"	1'-0"	2'-5" - 2'-6"	2'-0" - 2'-1"	1'-6" - 1'-7"	1'-1" - 1'-2"	2'-3" - 2'-3½"	1'-4" - 1'-4½"
No. 6(T)	2"	1'-0"	2'-11" - 3'-1"	2'-6" - 2'-7"	1'-10" - 2'-0"	1'-5" - 1'-6"	2'-9" - 2'-9½"	1'-8" - 1'-8½"

* EXCLUDING CONDUIT WEB ** TOP DIMENSION

STATE OF CALIFORNIA
DEPARTMENT OF TRANSPORTATION

ELECTRICAL SYSTEMS (TRAFFIC PULL BOX)

NO SCALE

RSP ES-8B DATED APRIL 15, 2016 SUPERSEDES RSP ES-8B DATED OCTOBER 30, 2015 AND RSP ES-8B DATED JULY 19, 2013 AND RSP ES-8B DATED JANUARY 20, 2012 THAT SUPPLEMENTS THE STANDARD PLANS BOOK DATED 2010.

REVISED STANDARD PLAN RSP ES-8B

2010 REVISED STANDARD PLAN RSP ES-8B

DATE PLOTTED => 28-JUL-2016
TIME PLOTTED => 14:30

Dist	COUNTY	ROUTE	POST MILES TOTAL PROJECT	SHEET No.	TOTAL SHEETS
02	Las, Sie,Las	70, 395	3.5/3.9 R0.0/R3.1,R0.0/R5.6	225	236

Theresa Gabriel
REGISTERED ELECTRICAL ENGINEER

October 30, 2015
PLANS APPROVAL DATE

REGISTERED PROFESSIONAL ENGINEER Theresa Aziz Gabriel No. E15129 Exp. 6-30-16 ELECTRICAL STATE OF CALIFORNIA

THE STATE OF CALIFORNIA OR ITS OFFICERS OR AGENTS SHALL NOT BE RESPONSIBLE FOR THE ACCURACY OR COMPLETENESS OF SCANNED COPIES OF THIS PLAN SHEET.

TO ACCOMPANY PLANS DATED 06-15-16

NOTE:

Curves represent the minimum footcandle (FC).

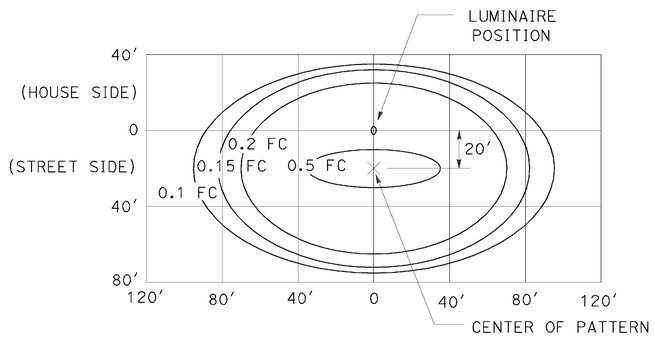

LED LUMINAIRE 165 W

34′ Mounting Height

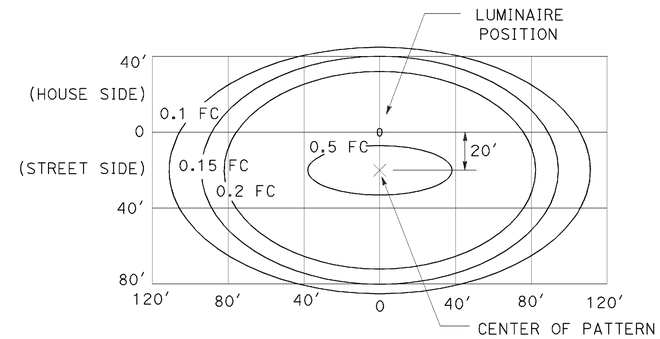

LED LUMINAIRE 235 W

40′ Mounting Height

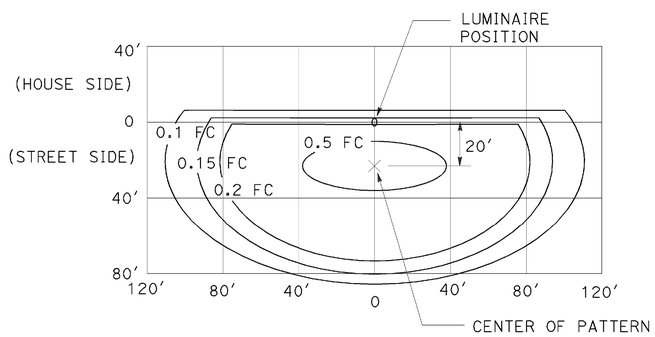

LED LUMINAIRE 235 W

40′ Mounting Height
with back side control

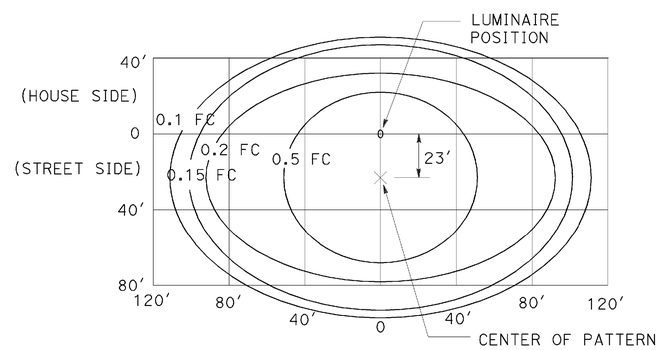

LED LUMINAIRE 300 W

40′ Mounting Height

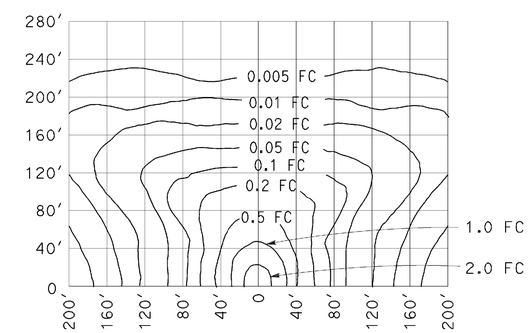

LOW-PRESSURE SODIUM LUMINAIRE 180 W

40′ Mounting Height
Lamp operated at 33,000 lm

STATE OF CALIFORNIA
DEPARTMENT OF TRANSPORTATION

ELECTRICAL SYSTEMS (ISOFOOTCANDLE CURVES)

NO SCALE

RSP ES-10A DATED OCTOBER 30, 2015 SUPERSEDES RSP ES-10A DATED JULY 19, 2013 THAT SUPPLEMENTS THE STANDARD PLANS BOOK DATED 2010.

REVISED STANDARD PLAN RSP ES-10A

2010 REVISED STANDARD PLAN RSP ES-10A

DATE PLOTTED => 28-JUL-2016
TIME PLOTTED => 14:31

Dist	COUNTY	ROUTE	POST MILES TOTAL PROJECT	SHEET No.	TOTAL SHEETS
02	Las, Sie,Las	70, 395	3.5/3.9 R0.0/R3.1,R0.0/R5.6	226	236

REGISTERED CIVIL ENGINEER

July 15, 2016
PLANS APPROVAL DATE

REGISTERED PROFESSIONAL ENGINEER
Stanley P. Johnson
No. C57793
Exp. 3-31-18
CIVIL
STATE OF CALIFORNIA

THE STATE OF CALIFORNIA OR ITS OFFICERS OR AGENTS SHALL NOT BE RESPONSIBLE FOR THE ACCURACY OR COMPLETENESS OF SCANNED COPIES OF THIS PLAN SHEET.

TO ACCOMPANY PLANS DATED 06-15-16

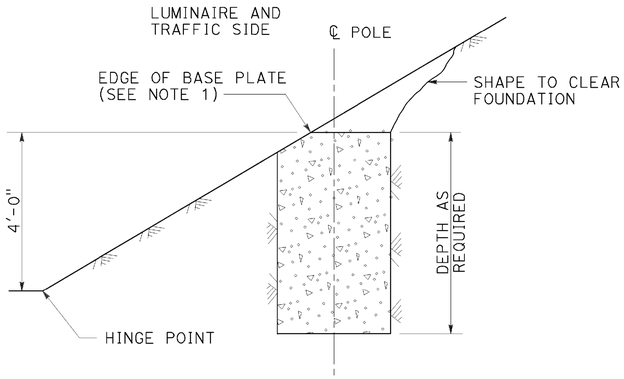

CUT SLOPES
STEEPER THAN 4:1,
LESS THAN 2:1
DETAIL A-1
See Note 2 and 3

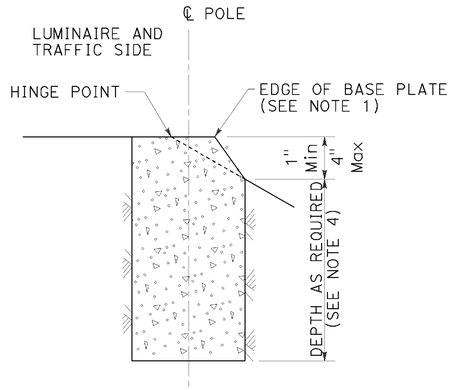

FILL SLOPES
STEEPER THAN 4:1,
LESS THAN 2:1
DETAIL A-2
See Note 2 and 3

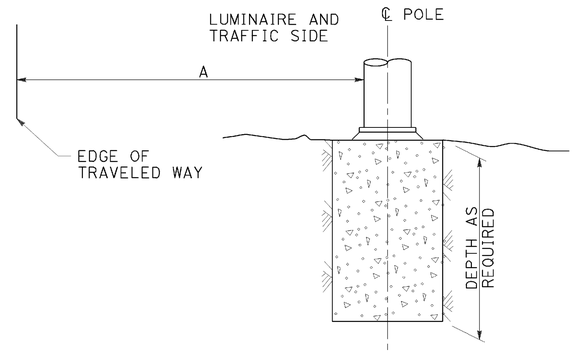

FLAT SECTIONS, CUT OR FILL SLOPES
4:1 OR FLATTER
DETAIL A-3
See Note 2

STANDARD TYPE	SETBACK (DIMENSION A)
32	30'-0" (Min)
31	20'-0" (Min)
15, 15D, 15-SB, 21, 21D, 30	ARM LENGTH (Min)

FOUNDATIONS ADJACENT TO ALL ROADWAYS EXCEPT
IN SIDEWALK, MEDIAN AND ISLAND AREAS
DETAIL A

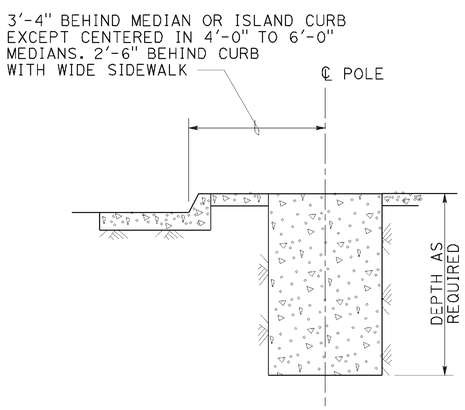

MEDIAN, ISLAND
OR WIDE SIDEWALK
DETAIL B-1
7' Wide and wider

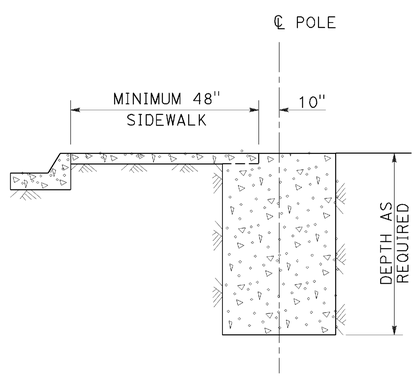

NARROW SIDEWALK
DETAIL B-2
Less than 7' wide

FOUNDATIONS IN SIDEWALK, MEDIAN AND ISLAND AREAS
DETAIL B

NOTES:

1. Where a portion of the foundation is above grade, the top edges shall have a 1" chamfer.
2. Slopes shall be horizontal to vertical ratio (Horizontal : Vertical).
3. Horizontal setbacks on cut and fill slopes steeper than 4:1 shall not exceed the distance shown for flat sections.
4. CIDH embedment depth shall be increased beyond standard depths by the diameter of the CIDH.

STATE OF CALIFORNIA
DEPARTMENT OF TRANSPORTATION

ELECTRICAL SYSTEMS (FOUNDATION INSTALLATIONS)

NO SCALE

RSP ES-11 DATED JULY 15, 2016 SUPERSEDES RSP
ES-11 DATED JULY 19, 2013 AND STANDARD PLAN ES-11
DATED MAY 20, 2011 - PAGE 488 OF THE STANDARD PLANS BOOK DATED 2010.

REVISED STANDARD PLAN RSP ES-11

2010 REVISED STANDARD PLAN RSP ES-11

DATE PLOTTED => 28-JUL-2016
TIME PLOTTED => 14:31

Dist	COUNTY	ROUTE	POST MILES TOTAL PROJECT	SHEET No.	TOTAL SHEETS
02	Las, Sie,Las	70, 395	3.5/3.9 R0.0/R3.1,R0.0/R5.6	227	236

Theresa Gabriel
REGISTERED ELECTRICAL ENGINEER

April 15, 2016
PLANS APPROVAL DATE

REGISTERED PROFESSIONAL ENGINEER Theresa Aziz Gabriel No. E15129 Exp. 6-30-16 ELECTRICAL STATE OF CALIFORNIA

THE STATE OF CALIFORNIA OR ITS OFFICERS OR AGENTS SHALL NOT BE RESPONSIBLE FOR THE ACCURACY OR COMPLETENESS OF SCANNED COPIES OF THIS PLAN SHEET.

TO ACCOMPANY PLANS DATED 06-15-16

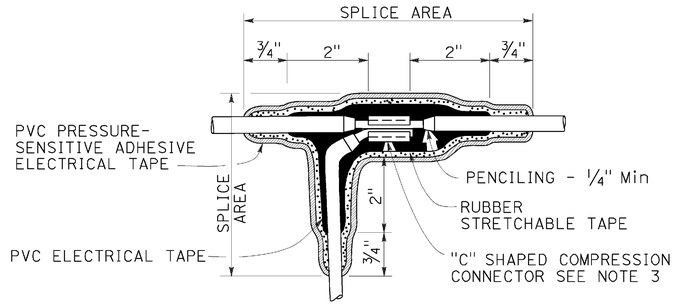

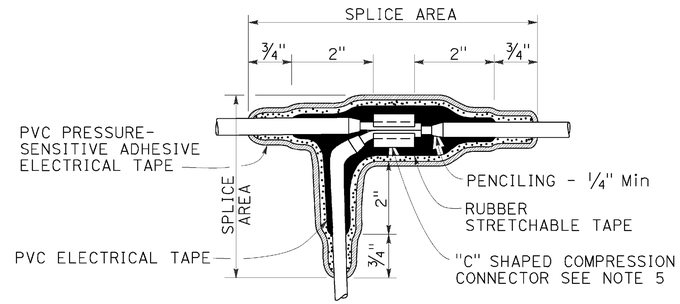

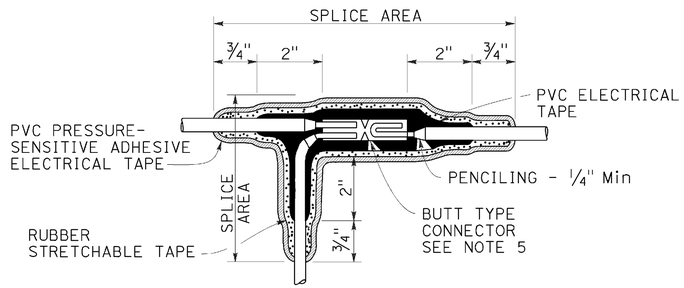

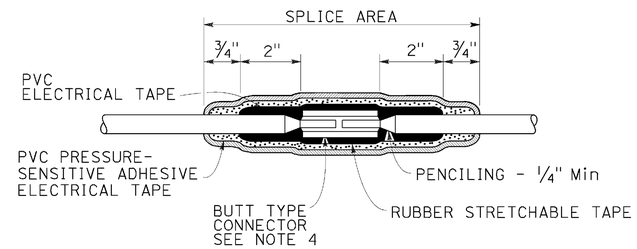

NOTES:

1. Dimensions are minimum.
2. Rubber tapes shall be rolled after application.
3. Between 1 free-end and 1 through conductor.
4. Between 2 free-end conductors.
5. Between 3 free-end conductors.

TYPICAL SPLICE INSULATION METHOD B

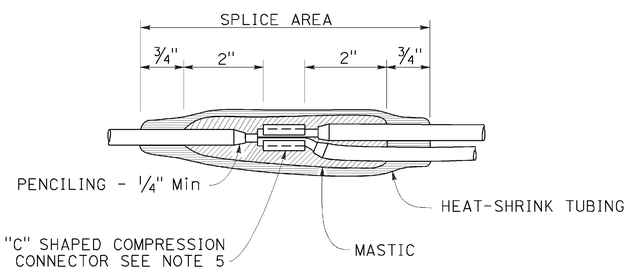

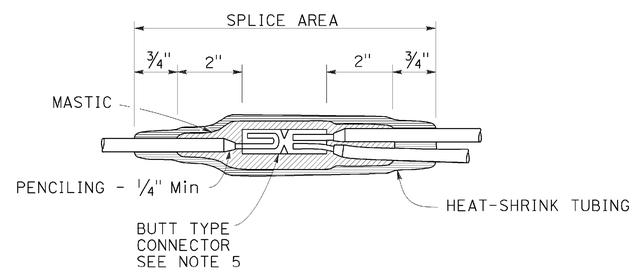

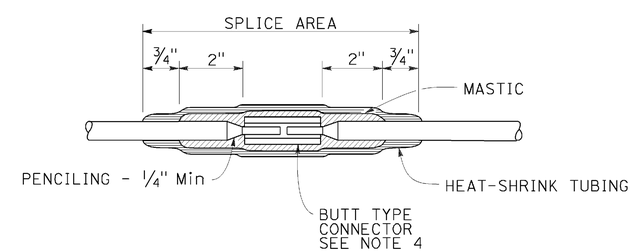

TYPICAL SPLICE INSULATION HEAT-SHRINK TUBING

STATE OF CALIFORNIA
DEPARTMENT OF TRANSPORTATION

ELECTRICAL SYSTEMS (SPLICE INSULATION METHODS DETAILS)

NO SCALE

RSP ES-13A DATED APRIL 15, 2016 SUPERSEDES RSP ES-13A DATED OCTOBER 30, 2015 AND STANDARD PLAN ES-13A DATED MAY 20, 2011 - PAGE 491 OF THE STANDARD PLANS BOOK DATED 2010.

REVISED STANDARD PLAN RSP ES-13A

2010 REVISED STANDARD PLAN RSP ES-13A

DATE PLOTTED => 28-JUL-2016
TIME PLOTTED => 14:33

Dist	COUNTY	ROUTE	POST MILES TOTAL PROJECT	SHEET No.	TOTAL SHEETS
02	Las, Sie,Las	70, 395	3.5/3.9 R0.0/R3.1,R0.0/R5.6	228	236

Theresa Gabriel
REGISTERED ELECTRICAL ENGINEER

April 15, 2016
PLANS APPROVAL DATE

REGISTERED PROFESSIONAL ENGINEER Theresa Aziz Gabriel No. E15129 Exp. 6-30-16 ELECTRICAL STATE OF CALIFORNIA

THE STATE OF CALIFORNIA OR ITS OFFICERS OR AGENTS SHALL NOT BE RESPONSIBLE FOR THE ACCURACY OR COMPLETENESS OF SCANNED COPIES OF THIS PLAN SHEET.

TO ACCOMPANY PLANS DATED 06-15-16

CIRCUIT VOLTAGE	FUSE VOLTAGE RATING	FUSE CURRENT RATING						
		HPS LAMP BALLAST		LOW PRESSURE SODIUM BALLAST	INDUCTION SIGN LIGHTING	SINGLE PHASE (TWO WIRE) TRANSFORMERS (PRIMARY SIDE)		
		70 W	100 W	180 W	85 W	1 kVA	2 kVA	3 kVA
120 V	250 V	5 A	5 A	5 A	5 A	10 A	20 A	30 A
240 V	250 V	5 A	5 A	5 A	5 A	6 A	10 A	20 A
480 V	500-600 V	5 A	5 A	3 A	1 A (SEE NOTE 2)	3 A	6 A	10 A

NOTES:

1. Primary lines of multiple ballasts shall be provided with fused connectors. Fuse ratings shall be as noted above.
2. See Revised Standard Plan RSP ES-15D, Type SC3 control.

FUSE RATINGS FOR FUSED CONNECTORS

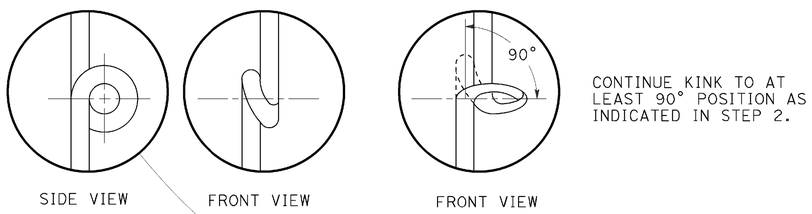

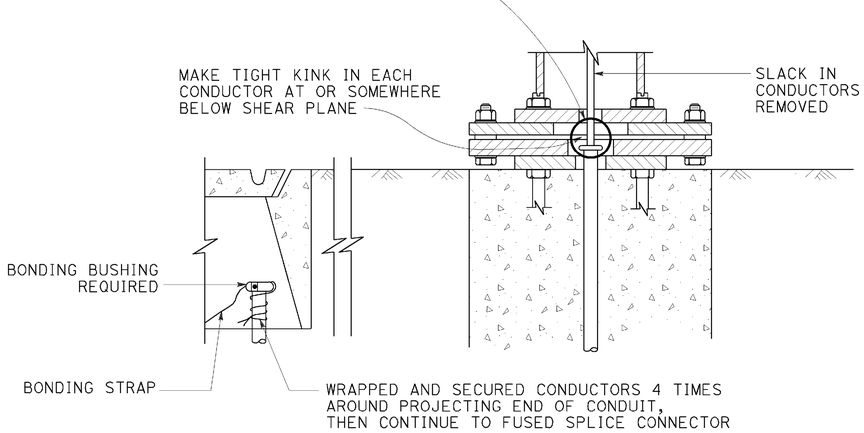

KINKING DETAIL FOR SLIP BASE STANDARDS

DETAIL A

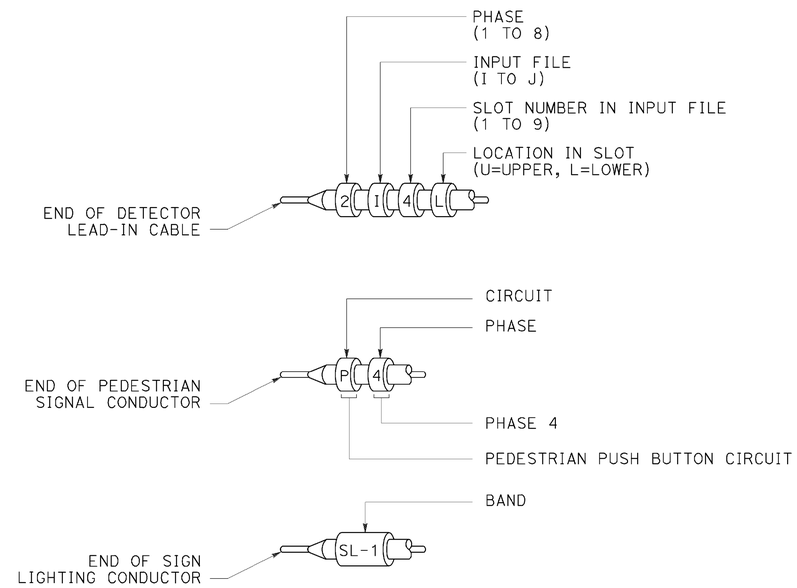

TYPICAL BANDING DETAILS

DETAIL B

STATE OF CALIFORNIA
DEPARTMENT OF TRANSPORTATION

ELECTRICAL SYSTEMS (FUSE RATING, KINKING AND BANDING DETAIL)

NO SCALE

RSP ES-13B DATED APRIL 15, 2016 SUPERSEDES STANDARD PLAN ES-13B DATED MAY 20, 2011 - PAGE 492 OF THE STANDARD PLANS BOOK DATED 2010.

REVISED STANDARD PLAN RSP ES-13B

2010 REVISED STANDARD PLAN RSP ES-13B

DATE PLOTTED => 28-JUL-2016
TIME PLOTTED => 14:32

DIST	COUNTY	ROUTE	POST MILES TOTAL PROJECT	SHEET No.	TOTAL SHEETS
02	Las, Sie,Las	70, 395	3.5/3.9 R0.0/R3.1,R0.0/R5.6	229	236

G S Blakesley 1-07-16
REGISTERED CIVIL ENGINEER DATE

06-15-16
PLANS APPROVAL DATE

REGISTERED PROFESSIONAL ENGINEER G. S. BLAKESLEY No. 45509 Exp. 12-31-16 CIVIL STATE OF CALIFORNIA

The State of California or its officers or agents shall not be responsible for the accuracy or completeness of scanned copies of this plan sheet.

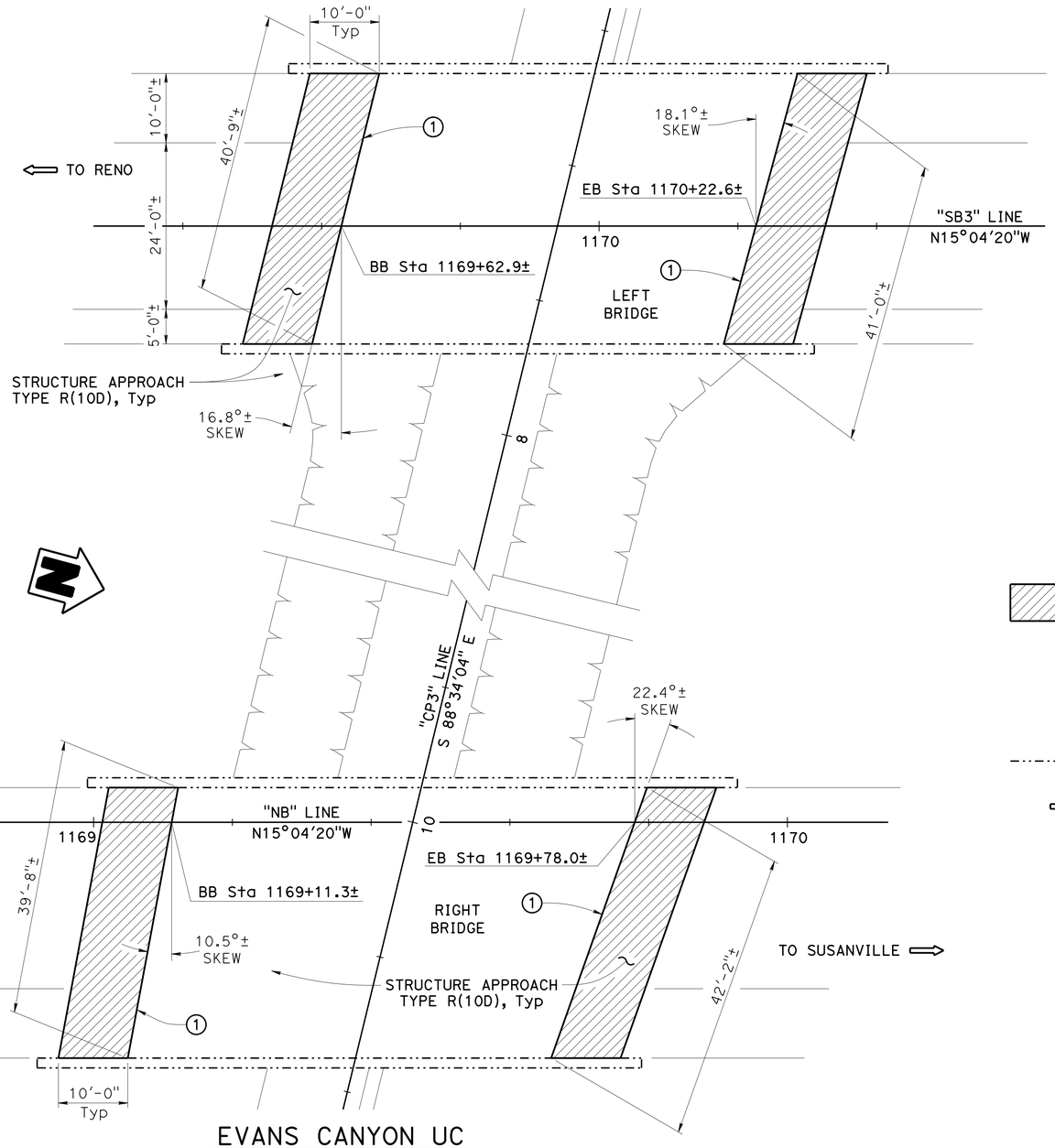

EVANS CANYON UC

1" = 10'

NOTE:
CONTRACTOR MUST VERIFY ALL CONTROLLING FIELD DIMENSIONS BEFORE ORDERING OR FABRICATING ANY MATERIAL.

QUANTITIES

PREPARE CONCRETE BRIDGE DECK SURFACE	1,560	SQFT
FURNISH POLYESTER CONCRETE OVERLAY	117	CF
PLACE POLYESTER CONCRETE OVERLAY	1,560	SQFT
AGGREGATE BASE (APPROACH SLAB)	6	CY
STRUCTURAL CONCRETE, APPROACH SLAB (TYPE R)	60	CY
PAVING NOTCH EXTENSION	123	CF
JOINT SEAL (MR ½")	164	LF

NOTES:

(1) - Place new joint seals at abutments after approaches and overlays have been placed. Use Type A Joint Seal, MR = ½". No bends into the railing. (B6-21)

LEGEND:

- Indicates limits of remove existing AC approach, place new Structure Approach Type R(10D) with paving notch extension, prepare surface, furnish and place new ¾" Min thickness polyester concrete overlay on the new structure approach. See "MISCELLANEOUS DETAILS" and "STRUCTURE APPROACH TYPE R(10D)" sheets.

- Indicates existing structure.

⟹ - Indicates direction of traffic

INDEX TO PLANS

SHEET NO.	SHEET TITLE
1.	GENERAL PLAN 1
2.	GENERAL PLAN 2
3.	GENERAL PLAN 3
4.	GENERAL PLAN 4
5.	MISCELLANEOUS DETAILS
6.	STRUCTURE APPROACH TYPE R(10D)
7.	THRIE BEAM CONNECTION TYPE 27
8.	THRIE BEAM CONNECTION TYPE 9

STANDARD PLANS DATED 2010

A10A	ABBREVIATIONS (SHEET 1 OF 2)
RSP A10B	ABBREVIATIONS (SHEET 2 OF 2)
B6-21	JOINT SEALS (MAXIMUM MOVEMENT RATING = 2")

GARY BLAKESLEY
DESIGN ENGINEER

	BY	CHECKED		BY	CHECKED
DESIGN	R. WASHINGTON, G. BLAKESLEY	E. RUFINO			
DETAILS	P. SILVA	E. RUFINO	LAYOUT	P. SILVA	E. RUFINO
QUANTITIES	E. RUFINO	D. ALVAREZ	SPECIFICATIONS	DARWIN VARGAS	PLANS AND SPECS COMPARED DARWIN VARGAS

ORIGINAL SCALE IN INCHES FOR REDUCED PLANS 0 1 2 3

STATE OF CALIFORNIA
DEPARTMENT OF TRANSPORTATION

DIVISION OF ENGINEERING SERVICES
STRUCTURE DESIGN
DESIGN BRANCH 6

BRIDGE NO. 07-0072R/L
POST MILE R0.10

ROUTE 395 BRIDGES
GENERAL PLAN 1

UNIT: 3591
PROJECT NUMBER & PHASE: 0200020283 & 1 CONTRACT NO.: 02-4E4204

DISREGARD PRINTS BEARING EARLIER REVISION DATES

REVISION DATES: 2-20-15 12-30-15 12-28-16

SHEET 1 OF 8

STRUCTURES DESIGN GENERAL PLAN SHEET (ENGLISH) (REV.09-01-10)

FILE => 1-02-4e4204-07-0072rl-a- gp1.dgn

P:\proj\02\4E420_plans\pse\STRUCTURES\1-02-4e4204-07-0072rl-a- gp1.dgn

USERNAME => s115152 DATE PLOTTED => 28-JUL-2016 TIME PLOTTED => 14:32

DIST	COUNTY	ROUTE	POST MILES TOTAL PROJECT	SHEET No.	TOTAL SHEETS
02	Las, Sie,Las	70, 395	3.5/3.9 R0.0/R3.1,R0.0/R5.6	230	236

G S Blakesley 1-07-16
REGISTERED CIVIL ENGINEER DATE

06-15-16
PLANS APPROVAL DATE

REGISTERED PROFESSIONAL ENGINEER G. S. BLAKESLEY No. 45509 Exp. 12-31-16 CIVIL STATE OF CALIFORNIA

The State of California or its officers or agents shall not be responsible for the accuracy or completeness of scanned copies of this plan sheet.

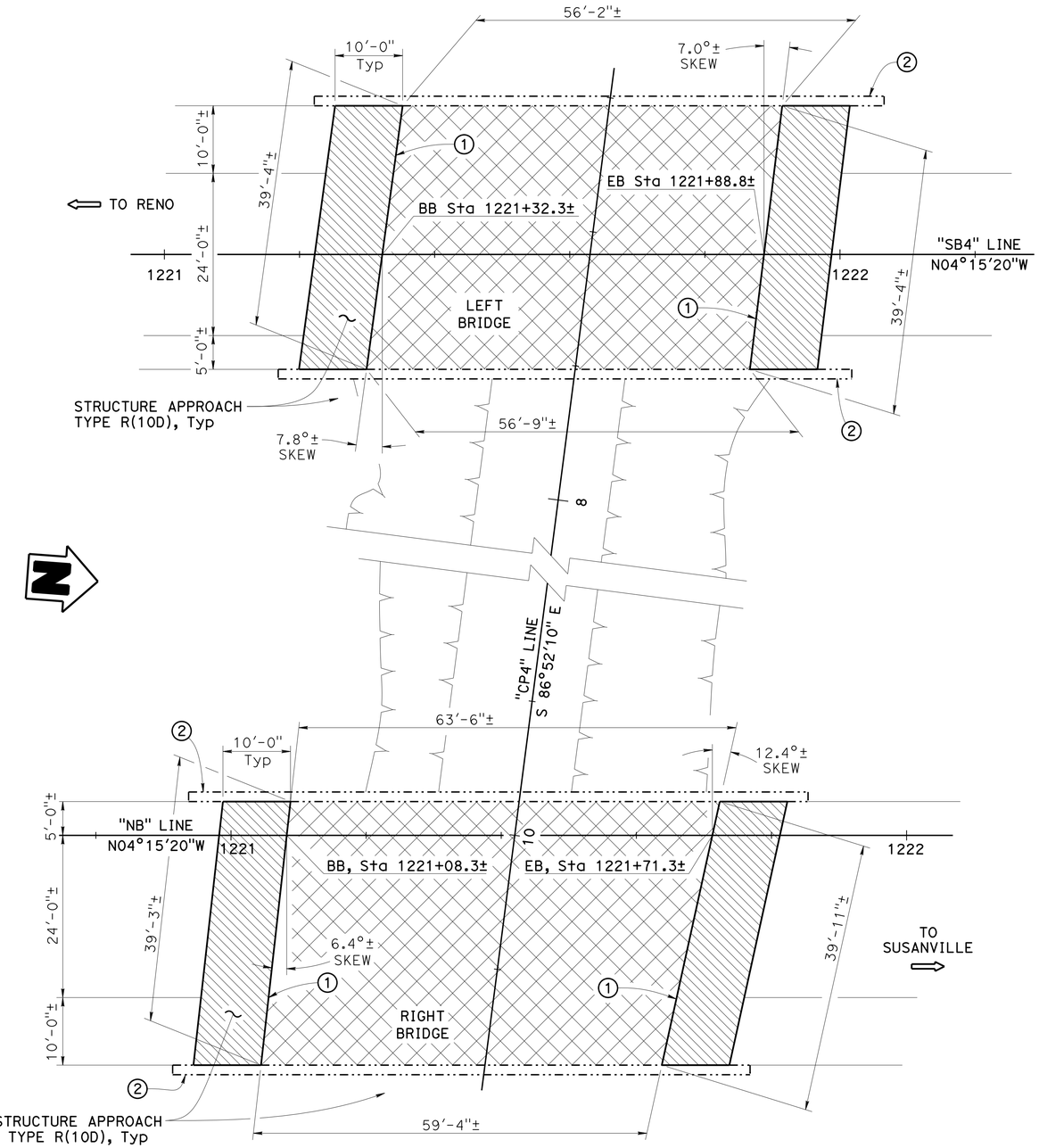

SCOTT UC

1" = 10'

NOTE:
CONTRACTOR MUST VERIFY ALL CONTROLLING FIELD DIMENSIONS BEFORE ORDERING OR FABRICATING ANY MATERIAL.

QUANTITIES

REMOVE POLYESTER CONCRETE OVERLAY	4,600	SQFT
PREPARE CONCRETE BRIDGE DECK SURFACE	6,160	SQFT
FURNISH POLYESTER CONCRETE OVERLAY	616	CF
PLACE POLYESTER CONCRETE OVERLAY	6,160	SQFT
AGGREGATE BASE (APPROACH SLAB)	6	CY
STRUCTURAL CONCRETE, APPROACH SLAB (TYPE R)	59	CY
PAVING NOTCH EXTENSION	119	CF
JOINT SEAL (MR ½")	158	LF
CONCRETE BARRIER (TRANSITION)	36	LF

NOTES:

(1) - Place new joint seals at abutments after approaches and overlays have been placed. Use Type A Joint Seal, MR = ½". No bends into the railing. B6-21

(2) - Construct concrete barrier transition, see "THRIE BEAM CONNECTION-TYPE 27" sheet. Guard Rail System not shown - see Roadway Plans.

LEGEND

- Indicates limits of remove existing AC approach, place new Structure Approach Type R(10D) with paving notch extension, prepare surface, and furnish and place new 1" Min thickness polyester concrete overlay on the new structure approach. See "MISCELLANEOUS DETAILS" and "STRUCTURE APPROACH TYPE R(10D)" sheets.

- Indicates limits of remove existing polyester concrete overlay, prepare concrete bridge deck surface, and furnish and place new 1" Min thickness polyester concrete overlay.

- Indicates existing structure.

- Indicates direction of traffic.

GARY BLAKESLEY
DESIGN ENGINEER

	BY	CHECKED
DESIGN	R. WASHINGTON, G. BLAKESLEY	E. RUFINO
DETAILS	P. SILVA	E. RUFINO
QUANTITIES	E. RUFINO	D. ALVAREZ
LAYOUT	P. SILVA	E. RUFINO
SPECIFICATIONS	DARWIN VARGAS	PLANS AND SPECS COMPARED DARWIN VARGAS

ORIGINAL SCALE IN INCHES FOR REDUCED PLANS 0 1 2 3

STATE OF CALIFORNIA
DEPARTMENT OF TRANSPORTATION

DIVISION OF ENGINEERING SERVICES
STRUCTURE DESIGN
DESIGN BRANCH 6

BRIDGE NO. 07-0075R/L
POST MILE R1.09

ROUTE 395 BRIDGES
GENERAL PLAN 2

UNIT: 3591
PROJECT NUMBER & PHASE: 0200020283 & 1 CONTRACT NO.: 02-4E4204

DISREGARD PRINTS BEARING EARLIER REVISION DATES
REVISION DATES 2-28-15 12-30-15 12-28-16
SHEET 2 OF 8

STRUCTURES DESIGN GENERAL PLAN SHEET (ENGLISH) (REV.09-01-10)

FILE => 2-02-4e4204-07-0075rl-a-gp2.dgn

P:\proj1\02\4E420_plans\pse\STRUCTURES\2-02-4e4204-07-0075rl-a-gp2.dgn

USERNAME => s115152 DATE PLOTTED => 28-JUL-2016 TIME PLOTTED => 14:32

DIST	COUNTY	ROUTE	POST MILES TOTAL PROJECT	SHEET No.	TOTAL SHEETS
02	Las, Sie,Las	70, 395	3.5/3.9 R0.0/R3.1,R0.0/R5.6	231	236

G S Blakesley 1-07-16
REGISTERED CIVIL ENGINEER DATE

06-15-16
PLANS APPROVAL DATE

REGISTERED PROFESSIONAL ENGINEER G. S. BLAKESLEY No. 45509 Exp. 12-31-16 CIVIL STATE OF CALIFORNIA

The State of California or its officers or agents shall not be responsible for the accuracy or completeness of scanned copies of this plan sheet.

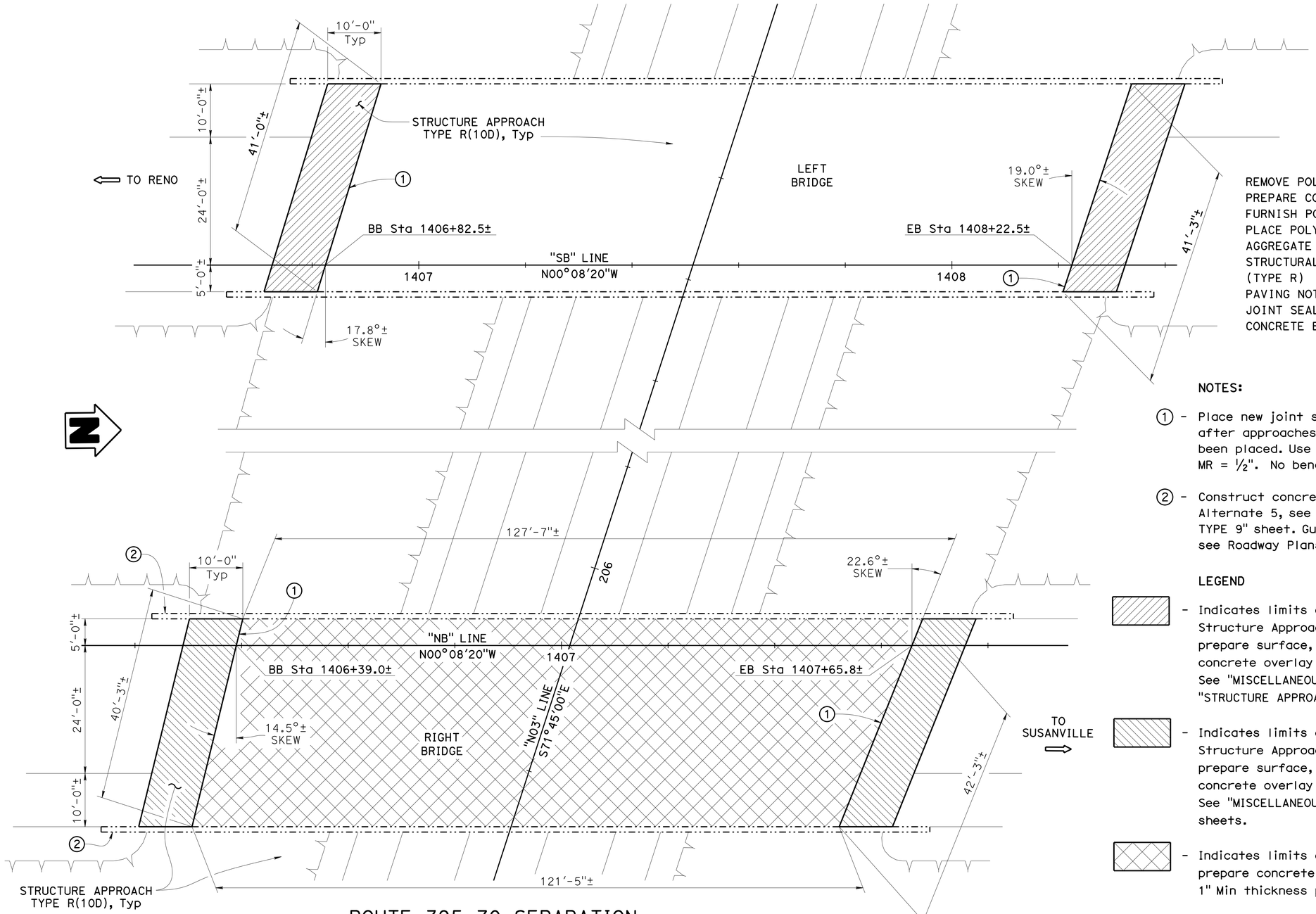

ROUTE 395-70 SEPARATION

1" = 10'

NOTE:
CONTRACTOR MUST VERIFY ALL CONTROLLING FIELD DIMENSIONS BEFORE ORDERING OR FABRICATING ANY MATERIAL.

QUANTITIES

REMOVE POLYESTER CONCRETE OVERLAY	4,860	SQFT
PREPARE CONCRETE BRIDGE DECK SURFACE	6,420	SQFT
FURNISH POLYESTER CONCRETE OVERLAY	623	CF
PLACE POLYESTER CONCRETE OVERLAY	6,420	SQFT
AGGREGATE BASE (APPROACH SLAB)	6	CY
STRUCTURAL CONCRETE, APPROACH SLAB (TYPE R)	60	CY
PAVING NOTCH EXTENSION	124	CF
JOINT SEAL (MR ½")	165	LF
CONCRETE BARRIER (TRANSITION)	9	LF

NOTES:

(1) - Place new joint seals at abutments after approaches and overlays have been placed. Use Type A Joint Seal, MR = ½". No bends into the railing. B6-21

(2) - Construct concrete barrier transition, Alternate 5, see "THRIE BEAM CONNECTION - TYPE 9" sheet. Guard Rail System not shown, see Roadway Plans.

LEGEND

- Indicates limits of remove existing AC approach, place new Structure Approach Type R(10D) with paving notch extension, prepare surface, furnish and place new ¾" Min thickness polyester concrete overlay on the new structure approach. See "MISCELLANEOUS DETAILS" and "STRUCTURE APPROACH TYPE R(10D)" sheets.

- Indicates limits of remove existing AC approach, place new Structure Approach Type R(10D) with paving notch extension, prepare surface, and furnish and place new 1" Min thickness polyester concrete overlay on the new structure approach. See "MISCELLANEOUS DETAILS" and "STRUCTURE APPROACH TYPE R(10D)" sheets.

- Indicates limits of remove existing polyester concrete overlay, prepare concrete bridge deck surface, and furnish and place new 1" Min thickness polyester concrete overlay.

- Indicates existing structure.

- Indicates direction of traffic.

GARY BLAKESLEY
DESIGN ENGINEER

	BY	CHECKED		BY	CHECKED
DESIGN	R. WASHINGTON, G. BLAKESLEY	E. RUFINO			
DETAILS	P. SILVA	E. RUFINO	LAYOUT	P. SILVA	E. RUFINO
QUANTITIES	E. RUFINO	D. ALVAREZ	SPECIFICATIONS	DARWIN VARGAS	PLANS AND SPECS COMPARED DARWIN VARGAS

ORIGINAL SCALE IN INCHES FOR REDUCED PLANS 0 1 2 3

STATE OF CALIFORNIA
DEPARTMENT OF TRANSPORTATION

DIVISION OF ENGINEERING SERVICES
STRUCTURE DESIGN
DESIGN BRANCH 6

BRIDGE NO. 07-0076R/L
POST MILE R4.6

ROUTE 395 BRIDGES
GENERAL PLAN 3

UNIT: 3591
PROJECT NUMBER & PHASE: 0200020283 & 1 CONTRACT NO.: 02-4E4204

DISREGARD PRINTS BEARING EARLIER REVISION DATES
REVISION DATES 2-20-15 12-30-15 12-28-16
SHEET 3 OF 8

STRUCTURES DESIGN GENERAL PLAN SHEET (ENGLISH) (REV.09-01-10)

FILE => 3-02-4e4204-07-0076r1-a-gp3.dgn

P:\proj1\02\4E420_plans\pse\STRUCTURES\3-02-4e4204-07-0076r1-a-gp3.dgn

USERNAME => s115152 DATE PLOTTED => 28-JUL-2016 TIME PLOTTED => 14:32

DIST	COUNTY	ROUTE	POST MILES TOTAL PROJECT	SHEET No.	TOTAL SHEETS
02	Las, Sie,Las	70, 395	3.5/3.9 R0.0/R3.1,R0.0/R5.6	232	236

G S Blakesley 1-07-16
REGISTERED CIVIL ENGINEER DATE

06-15-16
PLANS APPROVAL DATE

REGISTERED PROFESSIONAL ENGINEER G. S. BLAKESLEY No. 45509 Exp. 12-31-16 CIVIL STATE OF CALIFORNIA

The State of California or its officers or agents shall not be responsible for the accuracy or completeness of scanned copies of this plan sheet.

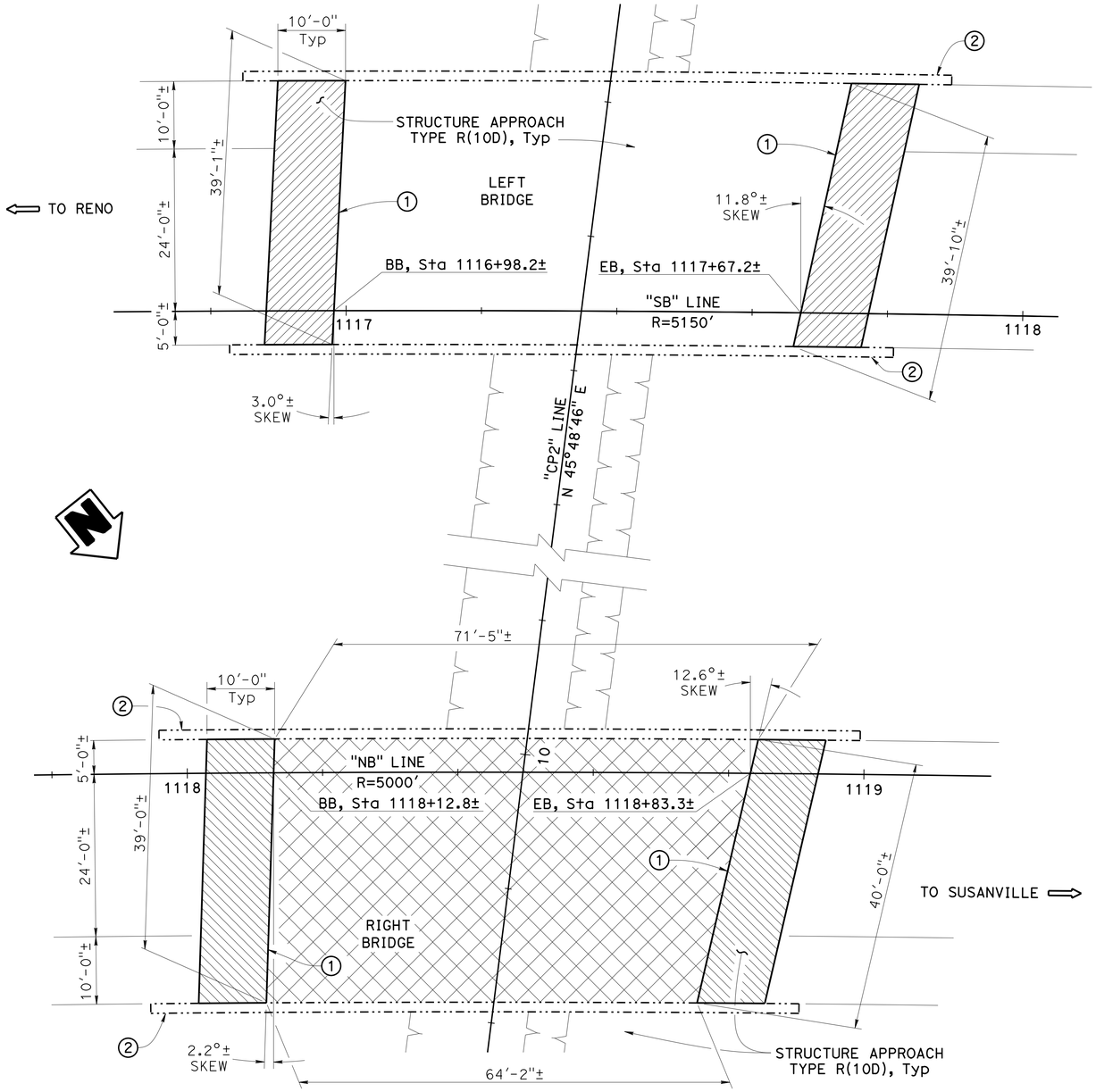

LONG VALLEY UC

1" = 10'

NOTE:
CONTRACTOR MUST VERIFY ALL CONTROLLING FIELD DIMENSIONS BEFORE ORDERING OR FABRICATING ANY MATERIAL.

QUANTITIES

REMOVE POLYESTER CONCRETE OVERLAY	2,645	SQFT
PREPARE CONCRETE BRIDGE DECK SURFACE	4,205	SQFT
FURNISH POLYESTER CONCRETE OVERLAY	400	CF
PLACE POLYESTER CONCRETE OVERLAY	4,205	SQFT
AGGREGATE BASE (APPROACH SLAB)	6	CY
STRUCTURAL CONCRETE, APPROACH SLAB (TYPE R)	59	CY
PAVING NOTCH EXTENSION	119	CF
JOINT SEAL (MR ½")	158	LF
CONCRETE BARRIER (TRANSITION)	36	LF

NOTES:

(1) - Place new joint seals at abutments after approaches and overlays have been placed. Use Type A Joint Seal, MR = ½". No bends into the railing. B6-21

(2) - Construct concrete barrier transition, see "THRIE BEAM CONNECTION-TYPE 27" sheet. Guard Rail System not shown - see Roadway Plans.

LEGEND:

- Indicates limits of remove existing AC approach, place new Structure Approach Type R(10D) with paving notch extension, prepare surface, furnish and place new ¾" Min thickness polyester concrete overlay on the new structure approach. See "MISCELLANEOUS DETAILS" and "STRUCTURE APPROACH TYPE R(10D)" sheets.

- Indicates limits of remove existing AC approach, place new Structure Approach Type R(10D) with paving notch extension, prepare surface, and furnish and place new 1" Min thickness polyester concrete overlay on the new structure approach. See "MISCELLANEOUS DETAILS" and "STRUCTURE APPROACH TYPE R(10D)" sheets.

- Indicates limits of remove existing polyester concrete overlay, prepare concrete bridge deck surface, furnish and place new 1" Min thickness polyester concrete overlay.

- Indicates existing structure.

- Indicates direction of traffic.

GARY BLAKESLEY
DESIGN ENGINEER

	BY	CHECKED
DESIGN	R. WASHINGTON, G. BLAKESLEY	E. RUFINO
DETAILS	P. SILVA	E. RUFINO
QUANTITIES	E. RUFINO	D. ALVAREZ
LAYOUT	P. SILVA	E. RUFINO
SPECIFICATIONS	DARWIN VARGAS	PLANS AND SPECS COMPARED DARWIN VARGAS

ORIGINAL SCALE IN INCHES FOR REDUCED PLANS 0 1 2 3

STATE OF CALIFORNIA
DEPARTMENT OF TRANSPORTATION

DIVISION OF ENGINEERING SERVICES
STRUCTURE DESIGN
DESIGN BRANCH 6

BRIDGE NO. 13-0018R/L
POST MILE R2.2

ROUTE 395 BRIDGES
GENERAL PLAN 4

UNIT: 3591
PROJECT NUMBER & PHASE: 0200020283 & 1 CONTRACT NO.: 02-4E4204

DISREGARD PRINTS BEARING EARLIER REVISION DATES

REVISION DATES: 2-20-15 12-30-15 12-28-16

SHEET 4 OF 8

STRUCTURES DESIGN GENERAL PLAN SHEET (ENGLISH) (REV.09-01-10)

FILE => 4-02-4e4204-13-0018rl-a-gp4.dgn

P:\proj1\02\4E420_plans\pse\STRUCTURES\4-02-4e4204-13-0018rl-a-gp4.dgn

USERNAME => s115152 DATE PLOTTED => 28-JUL-2016 TIME PLOTTED => 14:32

DIST	COUNTY	ROUTE	POST MILES TOTAL PROJECT	SHEET No.	TOTAL SHEETS
02	Las, Sie,Las	70, 395	3.5/3.9 R0.0/R3.1,R0.0/R5.6	233	236

G S Blakesley 1-07-16
REGISTERED CIVIL ENGINEER DATE

06-15-16
PLANS APPROVAL DATE

REGISTERED PROFESSIONAL ENGINEER G. S. BLAKESLEY No. 45509 Exp. 12-31-16 CIVIL STATE OF CALIFORNIA

The State of California or its officers or agents shall not be responsible for the accuracy or completeness of scanned copies of this plan sheet.

JOINT SEAL TABLE

BRIDGE NAME	BRIDGE NUMBER	LOCATION	MINIMUM "MR" (INCH)	Approx LENGTH (LF)	EXISTING WATERSTOP
EVANS CANYON UC (LEFT)	07-0072L	Abut 1	1/2	41	NO
		Abut 2	1/2	41	NO
EVANS CANYON UC (RIGHT)	07-0072R	Abut 1	1/2	40	NO
		Abut 2	1/2	42	NO
SCOTT UC (LEFT)	07-0075L	Abut 1	1/2	39	NO
		Abut 2	1/2	39	NO
SCOTT UC (RIGHT)	07-0075R	Abut 1	1/2	39	NO
		Abut 2	1/2	40	NO
ROUTE 395/70 SEPARATION (LEFT)	07-0076L	Abut 1	1/2	41	NO
		Abut 2	1/2	41	NO
ROUTE 395/70 SEPARATION (RIGHT)	07-0076R	Abut 1	1/2	40	NO
		Abut 2	1/2	42	NO
LONG VALLEY UC (LEFT)	13-0018L	Abut 1	1/2	39	NO
		Abut 2	1/2	40	NO
LONG VALLEY UC (RIGHT)	13-0018R	Abut 1	1/2	39	NO
		Abut 2	1/2	40	NO

NOTES:

1. When there is no joint in the barrier that aligns with the deck joint, do not install Joint Seal MR=1/2" or Silicone Joint Seal 3" up into barrier rail on the low side of the deck.
2. For details not shown see B6-21.

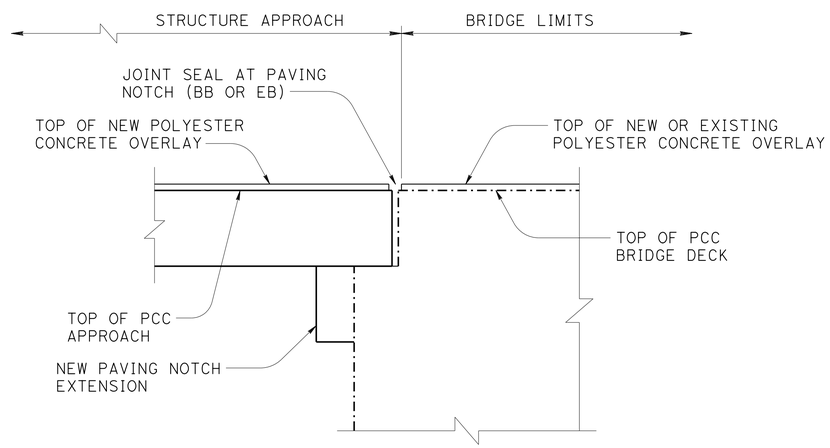

DIAPHRAGM ABUTMENT SECTION

NO SCALE

NOTE:
CONTRACTOR MUST VERIFY ALL CONTROLLING FIELD DIMENSIONS BEFORE ORDERING OR FABRICATING ANY MATERIAL.

	BY	CHECKED
DESIGN	G. BLAKESLEY	E. RUFINO
DETAILS	P. SILVA	E. RUFINO
QUANTITIES	E. RUFINO	D. ALVAREZ

STATE OF CALIFORNIA
DEPARTMENT OF TRANSPORTATION

DIVISION OF ENGINEERING SERVICES
STRUCTURE DESIGN
DESIGN BRANCH 6

BRIDGE NO. Varies
POST MILE Varies

ROUTE 395 BRIDGES
MISCELLANEOUS DETAILS

STRUCTURES DESIGN DETAIL SHEET (ENGLISH) (REV. 09-01-10)

ORIGINAL SCALE IN INCHES FOR REDUCED PLANS 0 1 2 3

UNIT: 3591
PROJECT NUMBER & PHASE: 0200020283 & 1 CONTRACT NO.: 02-4E4204

DISREGARD PRINTS BEARING EARLIER REVISION DATES

REVISION DATES 2-20-15 11-02-15 12-28-15

SHEET 5 OF 8

FILE => 5-02-4e4204-varies-u-misc-det.dgn

P:\proj1\02\4E420_plans\pse\STRUCTURES\5-02-4e4204-varies-u-misc-det.dgn

USERNAME => s115152 DATE PLOTTED => 28-JUL-2016 TIME PLOTTED => 14:32

DIST	COUNTY	ROUTE	POST MILES TOTAL PROJECT	SHEET No.	TOTAL SHEETS
02	Las, Sie,Las	70, 395	3.5/3.9 R0.0/R3.1,R0.0/R5.6	234	236

G S Blakeley 1-07-16
REGISTERED CIVIL ENGINEER DATE

06-15-16
PLANS APPROVAL DATE

REGISTERED PROFESSIONAL ENGINEER G. S. BLAKESLEY No. 45509 Exp. 12-31-16 CIVIL STATE OF CALIFORNIA

The State of California or its officers or agents shall not be responsible for the accuracy or completeness of scanned copies of this plan sheet.

The components of this Bridge Standard Drawing have been prepared under the responsible charge of the Technical Owner, a registered civil engineer in the State of California. Refer to: http//www.dot.ca.gov/hq/esc/techpubs/manual/bridgemanuals/bridge-standard-detail-sheet/index.html.
The selection and proper application of the component design and any modifications shown have been prepared under the responsible charge of the registered civil engineer for the project.

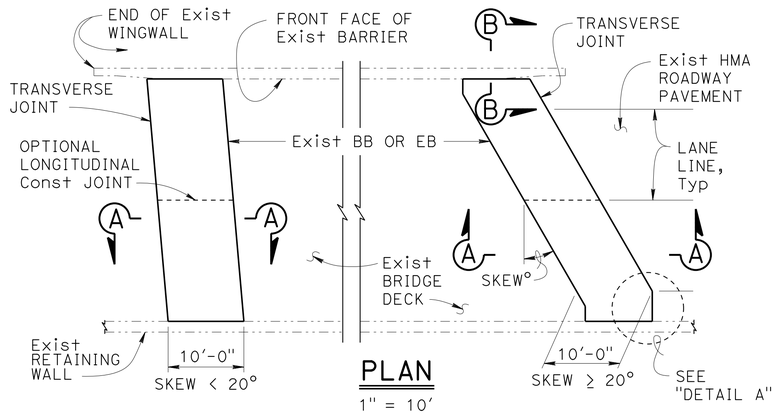

PLAN
1" = 10'

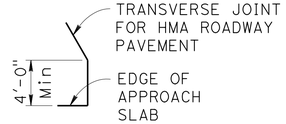

DETAIL A
No Scale

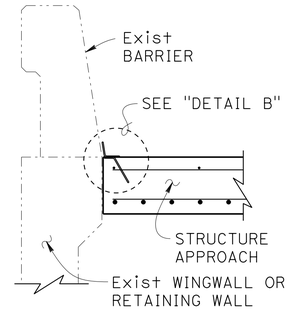

SECTION B-B
¾" = 1'-0"

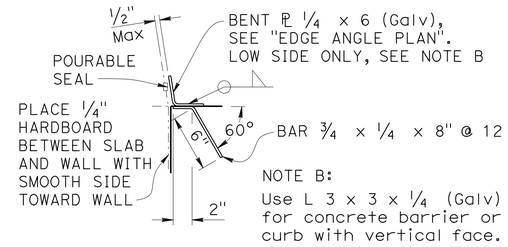

NOTE B:
Use L 3 x 3 x ¼ (Galv) for concrete barrier or curb with vertical face.

DETAIL B
1½" = 1'-0"

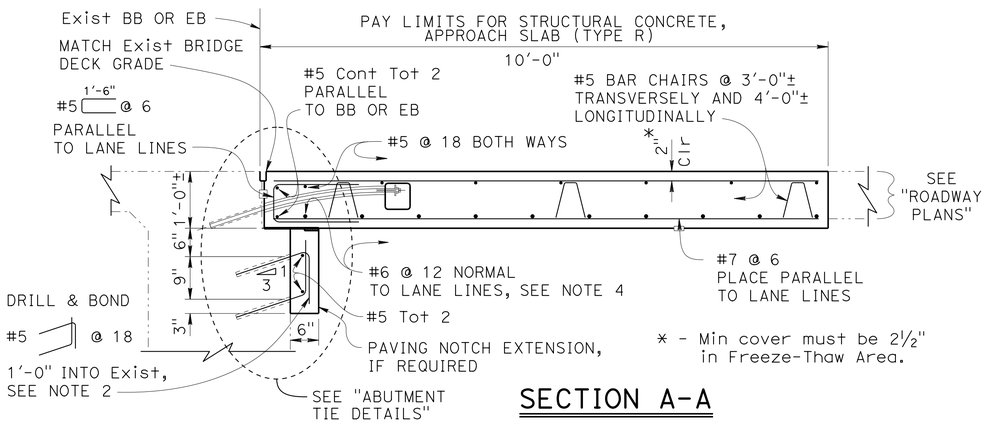

* - Min cover must be 2½" in Freeze-Thaw Area.

SECTION A-A
¾" = 1'-0"

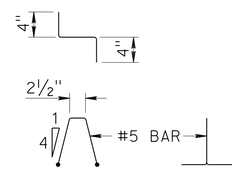

BAR CHAIR DETAIL
1" = 1'-0"

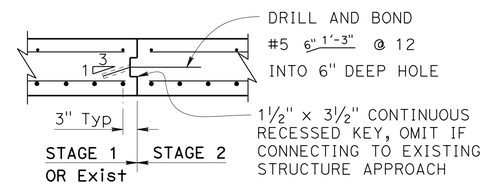

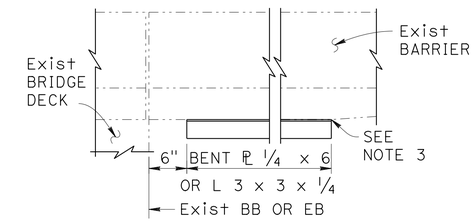

EDGE ANGLE PLAN
1" = 1'-0"

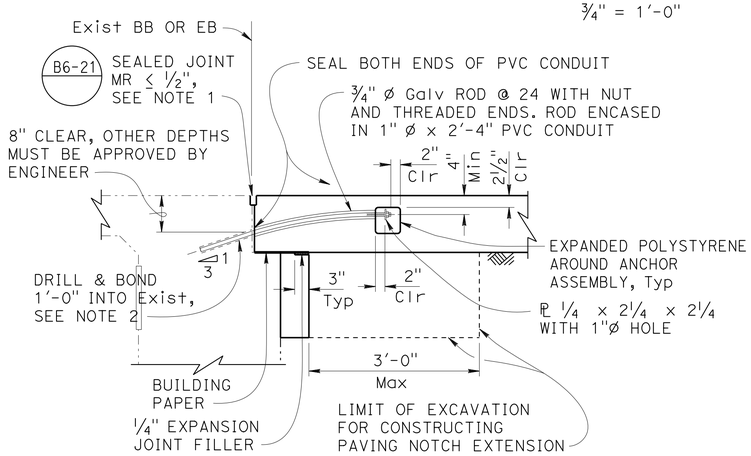

12" PAVING NOTCH

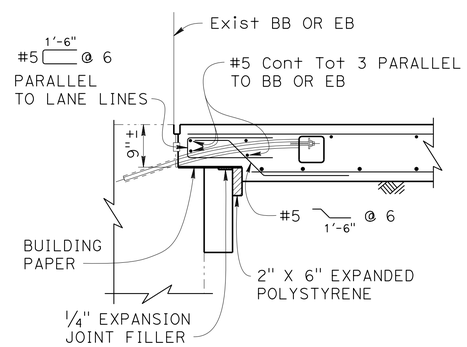

NOTE: For details not shown, see "12" PAVING NOTCH".

9" PAVING NOTCH

ABUTMENT TIE DETAILS
¾" = 1'-0"

NOTE:
CONTRACTOR MUST VERIFY ALL CONTROLLING FIELD DIMENSIONS BEFORE ORDERING OR FABRICATING ANY MATERIAL.

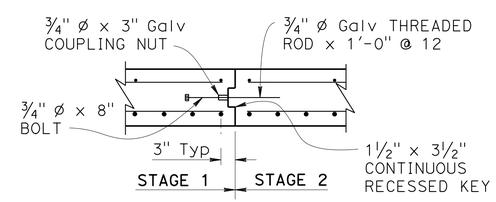

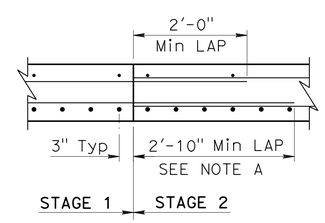

NOTE A:
Min lap splice for bottom Reinf must be 3'-6" in Freeze-Thaw Area.

LONGITUDINAL CONSTRUCTION JOINT ALTERNATIVES
¾" = 1'-0"

DESIGN NOTES

DESIGN: AASHTO LRFD Bridge Design Specifications, 2012 Edition with Caltrans Amendments, preface dated January 2014

LIMIT STATES: Service I, Strength I & II, Extreme II and Fatigue I (γ_{FAT} = 1.0)

DEAD LOAD: Includes 35 psf for future wearing surface

LIVE LOAD: HL93 and permit design load
Equivalent strip width method: W_1 = 12 ft
Slab span: L_1 = 7.83 ft

REINFORCED CONCRETE:
f_y = 60 ksi
f'_c = 3.6 ksi
n = 8

NOTES:
1. For details not shown, see other plan sheets. Adjust reinforcement to clear sawcut for sealed joint.
2. Space reinforcement to avoid existing prestress anchorages and other abutment reinforcement.
3. End the plate or edge angle at beginning of barrier transition, end of wingwall, or end of structure approach as applicable.
4. At the Contractor's option, approach slab transverse reinforcement may be placed parallel to BB or EB. Spacing of transverse reinforcement is measured along ℄ roadway.

-·-·- Indicates Existing Structure

STANDARD DRAWING
FILE NO. xs3-180
APPROVAL DATE January 2015

STATE OF CALIFORNIA DEPARTMENT OF TRANSPORTATION
DIVISION OF ENGINEERING SERVICES

BRIDGE NO. VARIES
POST MILE VARIES

ROUTE 395 BRIDGES
STRUCTURE APPROACH TYPE R(10D)

DS OSD 2147A (ENGLISH STANDARD DRAWING "XS" BORDER REV. (10-01-14)
ORIGINAL SCALE IN INCHES FOR REDUCED PLANS 0 1 2 3
UNIT: 3591
PROJECT NUMBER & PHASE: 0200020283 & 1 CONTRACT NO.: 02-4E4204
DISREGARD PRINTS DATED BEARING EARLIER REVISION DATES
REVISION DATES 4-30-15
SHEET 6 OF 8

FILE => 6-02-4e4204-varies-xs03-180.dgn
P:\proj1\02\4E420_plans\pse\STRUCTURES\6-02-4e4204-varies-xs03-180.dgn
USERNAME => s115152 DATE PLOTTED => 28-JUL-2016 TIME PLOTTED => 14:32

DIST	COUNTY	ROUTE	POST MILES TOTAL PROJECT	SHEET No.	TOTAL SHEETS
02	Las, Sie,Las	70, 395	3.5/3.9 R0.0/R3.1,R0.0/R5.6	235	236

G S Blakesley 1-07-16
REGISTERED CIVIL ENGINEER DATE

06-15-16
PLANS APPROVAL DATE

REGISTERED PROFESSIONAL ENGINEER G. S. BLAKESLEY No. 45509 Exp. 12-31-16 CIVIL STATE OF CALIFORNIA

The State of California or its officers or agents shall not be responsible for the accuracy or completeness of scanned copies of this plan sheet.

The components of this Bridge Standard Drawing have been prepared under the responsible charge of the Technical Owner, a registered civil engineer in the State of California. Refer to: http//www.dot.ca.gov/hq/esc/techpubs/manual/bridgemanuals/bridge-standard-detail-sheet/index.html.
The selection and proper application of the component design and any modifications shown have been prepared under the responsible charge of the registered civil engineer for the project.

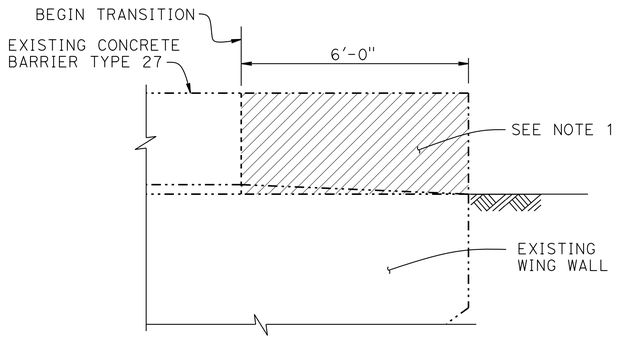

CONCRETE REMOVAL
½" = 1'-0"

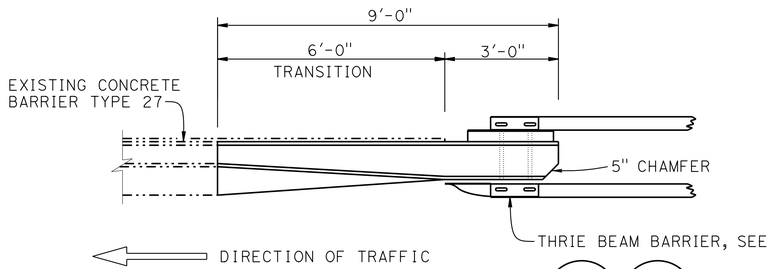

PLAN
½" = 1'-0"

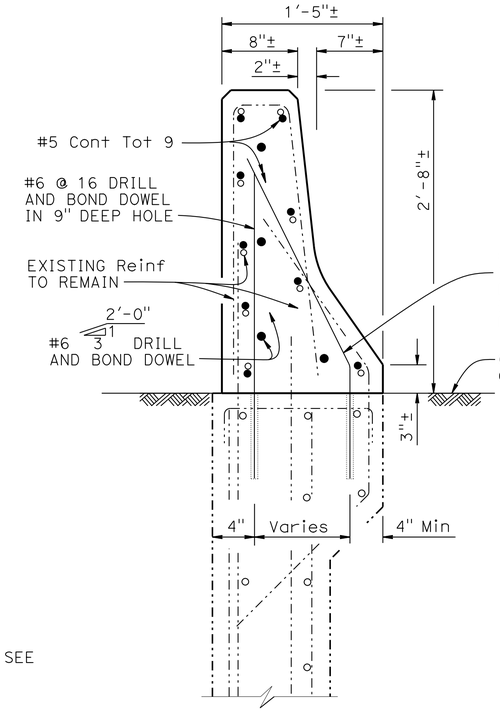

SECTION B-B
1½" = 1'-0"

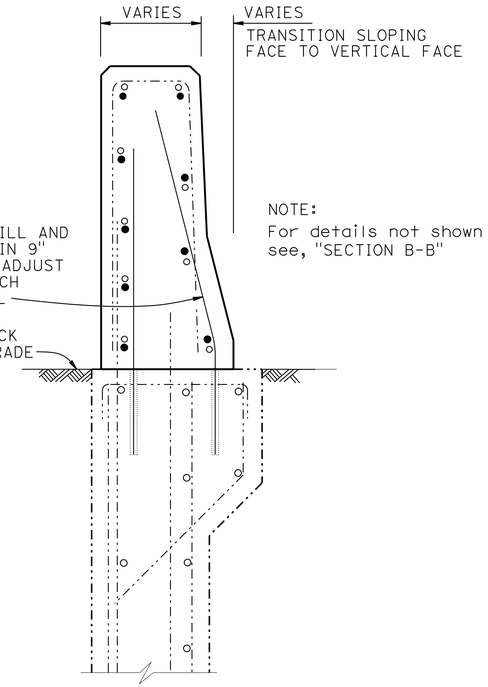

SECTION C-C
1½" = 1'-0"

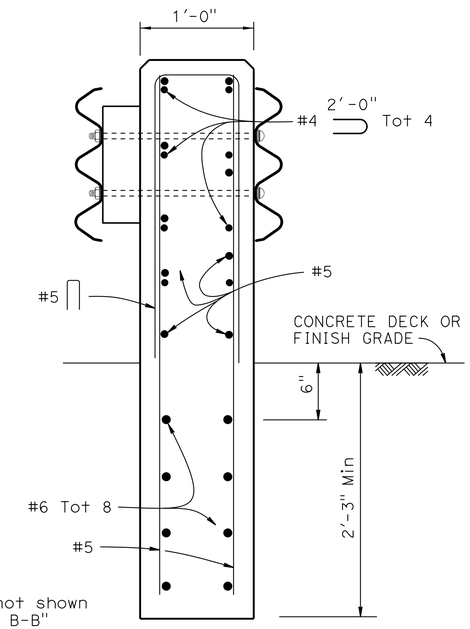

NOTE:
For details not shown see, "SECTION B-B" and "SECTION C-C".

SECTION D-D
1½" = 1'-0"

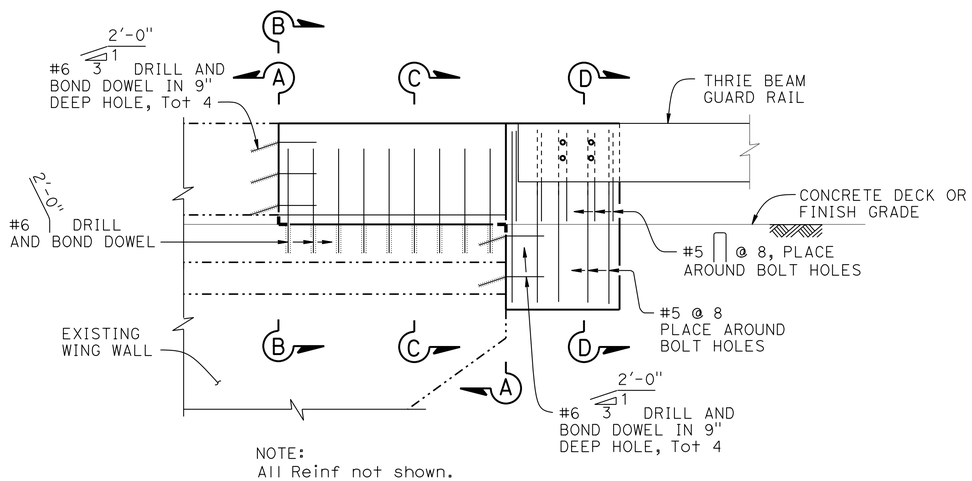

NOTE:
All Reinf not shown.

ELEVATION
½" = 1'-0"

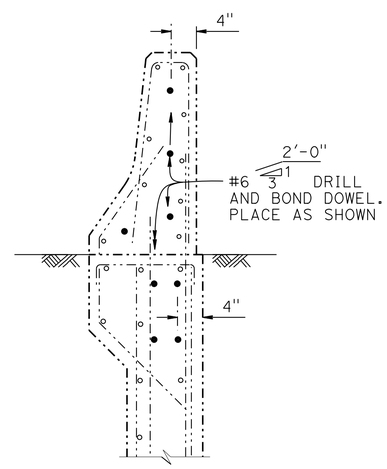

SECTION A-A
1" = 1'-0"

NOTES:

1. Cut and remove the portion of Concrete Barrier Type 27 as required. Existing reinforcement to remain
2. Wingwall reinforcement to remain

LEGEND:

- Indicates existing structure
- Indicates new construction
- Concrete removal
- Indicates Existing Reinforcement

NOTE:
CONTRACTOR MUST VERIFY ALL CONTROLLING FIELD DIMENSIONS BEFORE ORDERING OR FABRICATING ANY MATERIAL.

STANDARD DRAWING
FILE NO. xs16-020
APPROVAL DATE July 2014

STATE OF CALIFORNIA
DEPARTMENT OF TRANSPORTATION

DIVISION OF ENGINEERING SERVICES

BRIDGE NO. VARIES
POST MILE VARIES

ROUTE 395 BRIDGES
THRIE BEAM CONNECTION-TYPE 27

DS OSD 2147A (ENGLISH STANDARD DRAWING "XS" BORDER REV. (02-02-11)

ORIGINAL SCALE IN INCHES FOR REDUCED PLANS 0 1 2 3

UNIT: 3591
PROJECT NUMBER & PHASE: 0200020283 & 1 CONTRACT NO.: 02-4E4204

DISREGARD PRINTS BEARING EARLIER REVISION DATES

REVISION DATES 4-30-15

SHEET 7 OF 8

FILE => 7-02-4e4204-varies-xs16-020.dgn

P:\proj1\02\4E420_plans\pse\STRUCTURES\7-02-4e4204-varies-xs16-020.dgn

USERNAME => s115152 DATE PLOTTED => 01-AUG-2016 TIME PLOTTED => 06:23

DIST	COUNTY	ROUTE	POST MILES TOTAL PROJECT	SHEET No.	TOTAL SHEETS
02	Las, Sie,Las	70, 395	3.5/3.9 R0.0/R3.1,R0.0/R5.6	236	236

G S Blakesley 1-07-16
REGISTERED CIVIL ENGINEER DATE

06-15-16
PLANS APPROVAL DATE

REGISTERED PROFESSIONAL ENGINEER G. S. BLAKESLEY No. 45509 Exp. 12-31-16 CIVIL STATE OF CALIFORNIA

The State of California or its officers or agents shall not be responsible for the accuracy or completeness of scanned copies of this plan sheet.

The components of this Bridge Standard Drawing have been prepared under the responsible charge of the Technical Owner, a registered civil engineer in the State of California. Refer to: http//www.dot.ca.gov/hq/esc/techpubs/manual/bridgemanuals/bridge-standard-detail-sheet/index.html.
The selection and proper application of the component design and any modifications shown have been prepared under the responsible charge of the registered civil engineer for the project.

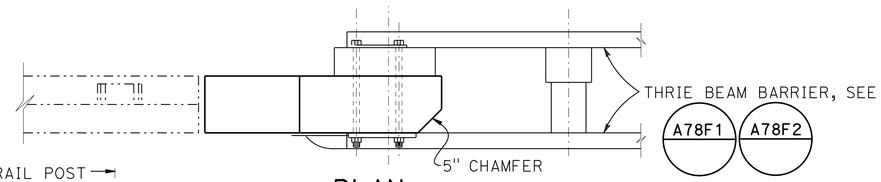

PLAN
¾" = 1'-0"

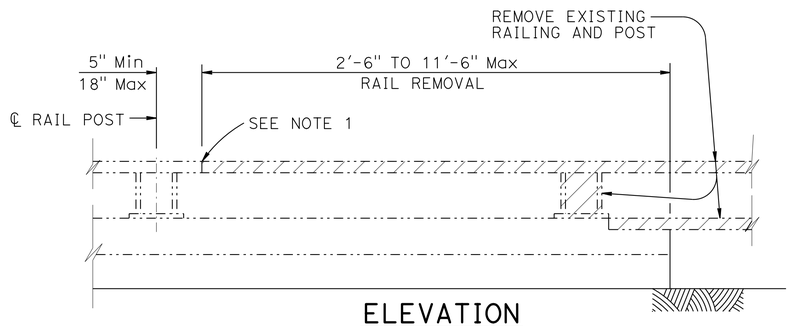

ELEVATION
¾" = 1'-0"
RAIL REMOVAL

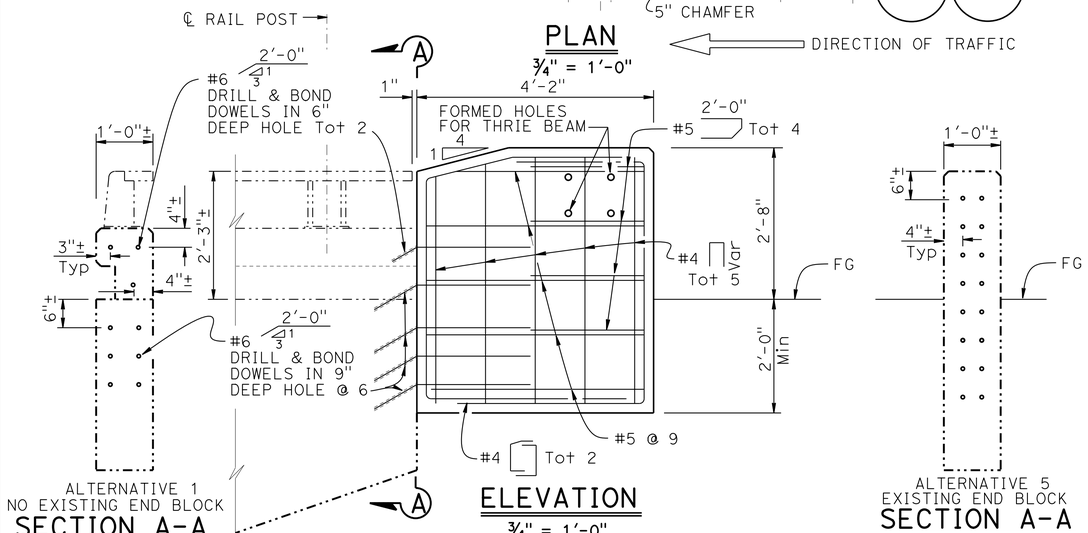

ALTERNATIVE 1
NO EXISTING END BLOCK
SECTION A-A
¾" = 1'-0"

ELEVATION
¾" = 1'-0"
ALTERNATIVE 1 & 5

ALTERNATIVE 5
EXISTING END BLOCK
SECTION A-A
¾" = 1'-0"

NOTE:
Alternative 1 shown (No Existing End Block),
Alternative 5 similar (Existing End Block)

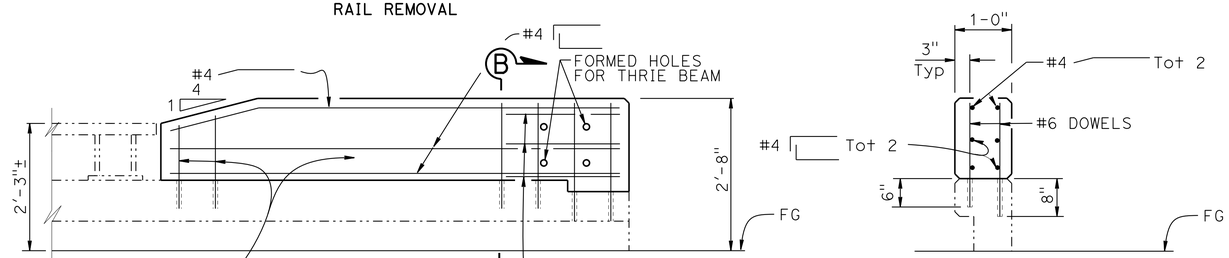

ELEVATION
¾" = 1'-0"
NEW END POST
ALTERNATIVE 2

SECTION B-B
¾" = 1'-0"

NOTE:
1. Cut and remove Type 9 and BAGR as required.

LEGEND:
-·-·-·- Indicates Existing Stucture
——— Indicates New Structure

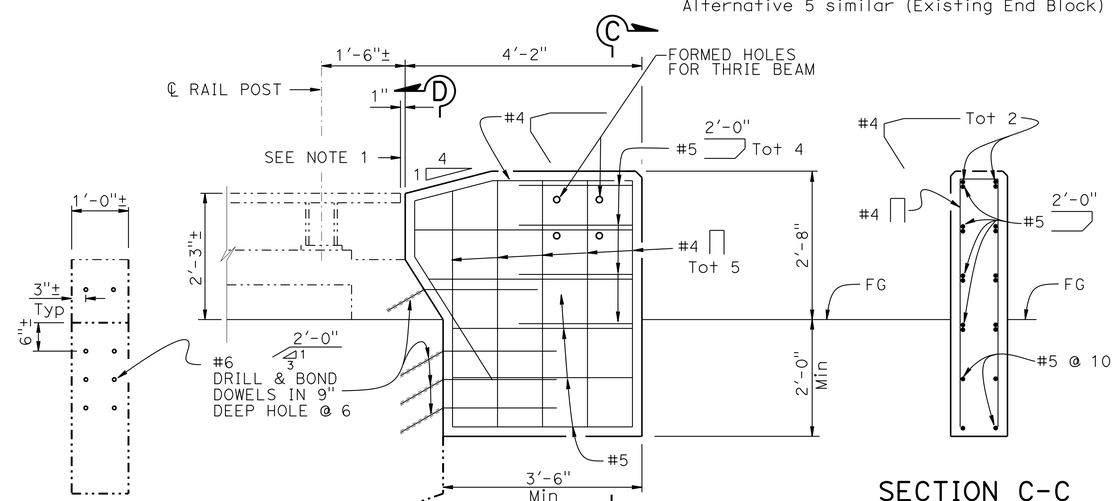

SECTION D-D
¾" = 1'-0"

ELEVATION
¾" = 1'-0"
ALTERNATIVE 3

SECTION C-C
¾" = 1'-0"

NOTE:
THE CONTRACTOR MUST VERIFY ALL CONTROLLING FIELD DIMENSIONS BEFORE ORDERING OR FABRICATING ANY MATERIAL.

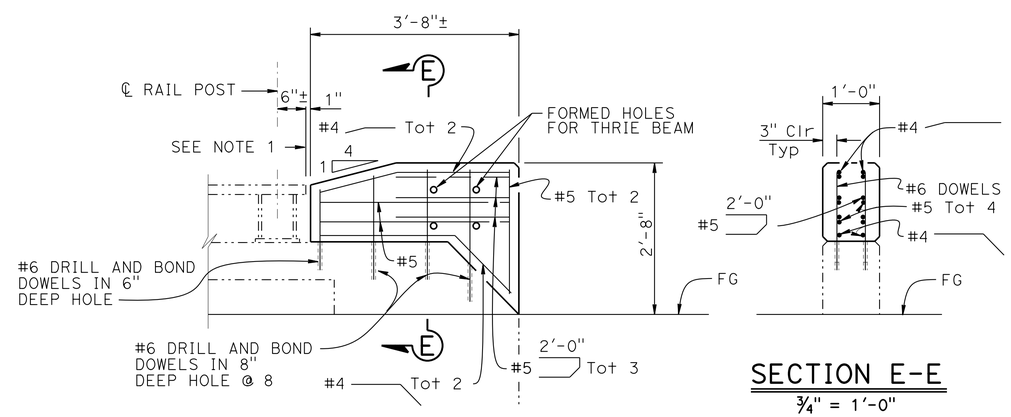

ELEVATION
¾" = 1'-0"
ALTERNATIVE 4

SECTION E-E
¾" = 1'-0"

STANDARD DRAWING		STATE OF CALIFORNIA DEPARTMENT OF TRANSPORTATION	DIVISION OF ENGINEERING SERVICES	BRIDGE NO. 07-0076R/L	ROUTE 395 BRIDGES
FILE NO. xs16-030	APPROVAL DATE July 2014			POST MILE R4.6	THRIE BEAM CONNECTION-TYPE 9

DS OSD 2147A (ENGLISH STANDARD DRAWING "XS" BORDER REV. (02-02-11))
ORIGINAL SCALE IN INCHES FOR REDUCED PLANS 0 1 2 3
UNIT: 3591
PROJECT NUMBER & PHASE: 0200020283 & 1 CONTRACT NO.: 02-4E4204
DISREGARD PRINTS BEARING EARLIER REVISION DATES
REVISION DATES 8-31-15 SHEET 8 OF 8
FILE => 8-02-4e4204-varies-xs16-030.dgn

P:\proj1\02\4E420_plans\pse\STRUCTURES\8-02-4e4204-varies-xs16-030.dgn
USERNAME => s115152 DATE PLOTTED => 28-JUL-2016 TIME PLOTTED => 14:33