Dist	COUNTY	ROUTE	POST MILES TOTAL PROJECT	SHEET No.	TOTAL SHEETS
02	Sis	96	R52.5/88.4	1	208

INDEX OF PLANS

SHEET No.	DESCRIPTION
1	TITLE AND LOCATION MAP
2-4	TYPICAL CROSS SECTIONS
5-7	LAYOUTS
8-10	PROFILES AND SUPERELEVATION DIAGRAMS
11-28	CONSTRUCTION DETAILS
29	DRAINAGE DETAILS
30	DRAINAGE QUANTITIES
31-32	UTILITY PLANS
33-34	CONSTRUCTION AREA SIGNS
35-46	TRAFFIC HANDLING PLANS, DETAILS AND QUANTITIES
47-49	PAVEMENT DELINEATION AND SIGN PLANS
50	PAVEMENT DELINEATION QUANTITIES
51-55	SIGN DETAILS AND QUANTITIES
56-57	SUMMARY OF QUANTITIES
58-61	EROSION CONTROL
62-71	ELECTRICAL
72-110	REVISED STANDARD PLANS

THE STANDARD PLANS LIST APPLICABLE TO THIS CONTRACT IS INCLUDED IN THE NOTICE TO BIDDERS AND SPECIAL PROVISIONS BOOK.

STRUCTURES

111-208	STRUCTURE PLANS

STATE OF CALIFORNIA

DEPARTMENT OF TRANSPORTATION

PROJECT PLANS FOR CONSTRUCTION ON

STATE HIGHWAY

IN SISKIYOU COUNTY NEAR SEIAD VALLEY AT VARIOUS LOCATIONS FROM 0.1 MILE WEST OF THOMPSON CREEK BRIDGE TO 0.2 MILE EAST OF BEAVER CREEK BRIDGE

TO BE SUPPLEMENTED BY STANDARD PLANS DATED 2010

LOCATION MAP

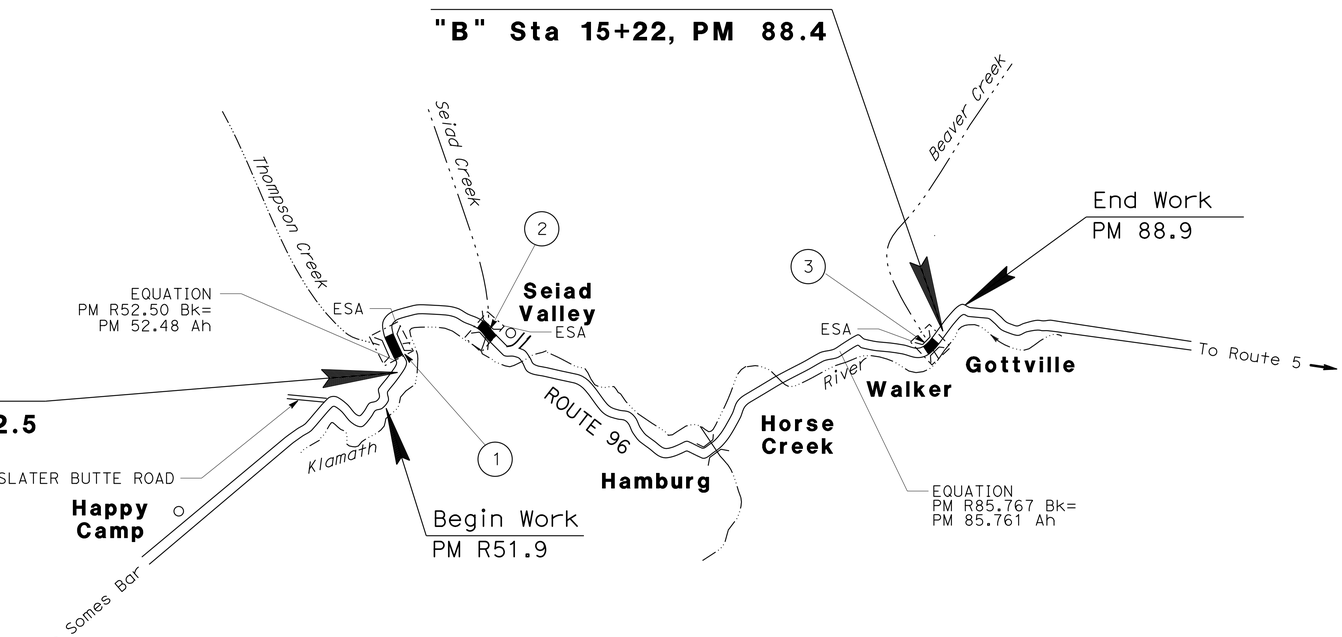

LOCATIONS OF CONSTRUCTION

No.	COUNTY	ROUTE	POST MILE	BRIDGE NAME/No.
1	Sis	96	R52.5/52.6	THOMPSON CREEK BRIDGE No. 02-0068
2	Sis	96	60.1/60.3	SEIAD CREEK BRIDGE No. 02-0072
3	Sis	96	88.2/88.4	BEAVER CREEK BRIDGE No. 02-0081

NO SCALE

THE CONTRACTOR SHALL POSSESS THE CLASS (OR CLASSES) OF LICENSE AS SPECIFIED IN THE "NOTICE TO BIDDERS."

Lori Ewens 06-12-16
PROJECT ENGINEER DATE
REGISTERED CIVIL ENGINEER

June 15, 2016
PLANS APPROVAL DATE

REGISTERED PROFESSIONAL ENGINEER LORI EWENS No. C43919 Exp. 06-30-17 CIVIL STATE OF CALIFORNIA

THE STATE OF CALIFORNIA OR ITS OFFICERS OR AGENTS SHALL NOT BE RESPONSIBLE FOR THE ACCURACY OR COMPLETENESS OF SCANNED COPIES OF THIS PLAN SHEET.

CONTRACT No.	02-4E6504
PROJECT ID	0212000012

PROJECT MANAGER: MIKE FEAKES
DESIGN ENGINEER: STEVE TOPAL

P:\proj1\02\4E650_plans\pse\24e650ab001.dgn

LAST REVISION 06-12-16 | DATE PLOTTED => 22-AUG-2016 | TIME PLOTTED => 15:20

Dist	COUNTY	ROUTE	POST MILES TOTAL PROJECT	SHEET No.	TOTAL SHEETS
02	Sis	96	R52.5/88.4	2	210

Lori Ewens 06-12-16
REGISTERED CIVIL ENGINEER DATE

06-15-16
PLANS APPROVAL DATE

REGISTERED PROFESSIONAL ENGINEER
LORI EWENS
No. C43919
Exp. 6-30-17
CIVIL
STATE OF CALIFORNIA

THE STATE OF CALIFORNIA OR ITS OFFICERS OR AGENTS SHALL NOT BE RESPONSIBLE FOR THE ACCURACY OR COMPLETENESS OF SCANNED COPIES OF THIS PLAN SHEET.

NOTES:

1. FOR ACCURATE RIGHT OF WAY DATA, CONTACT RIGHT OF WAY ENGINEERING AT THE DISTRICT OFFICE.
2. DIMENSIONS OF THE PAVEMENT STRUCTURES (STRUCTURAL SECTIONS) ARE SUBJECT TO TOLERANCES SPECIFIED IN THE STANDARD SPECIFICATIONS.
3. FOR SUPERELEVATION, SEE PROFILE AND SUPERELEVATION DIAGRAM.
4. FOR RETAINING WALL AND BRIDGE BARRIER RAIL SEE STRUCTURE PLANS.
5. EXCEPT WHERE SHOWN THE SUPERELEVATION OF THE SHOULDER MATCHES THE SUPERELEVATION OF THE ADJACENT LANE.
6. FOR MBGR AND VEGETATION CONTROL SEE CONSTRUCTION DETAILS
7. NO SHOULDER BACKING WHERE VEGETATION CONTROL IS PLACED

DESIGN DESIGNATION

ADT (2016)	950	D	63%
ADT (2036)	1050	T	7%
DHV	106	V	55 mph
EAL	329,700	TI_{20}	8

PAVEMENT CLIMATE REGION:

LOCATION 1-THOMPSON CREEK	LOW MOUNTAIN
LOCATION 2-SEIAD CREEK	LOW MOUNTAIN
LOCATION 3-BEAVER CREEK	HIGH MOUNTAIN

ABBREVIATIONS:

HMA (WMT) HOT MIX ASPHALT (TYPE A, WARM MIX TECHNOLOGY)

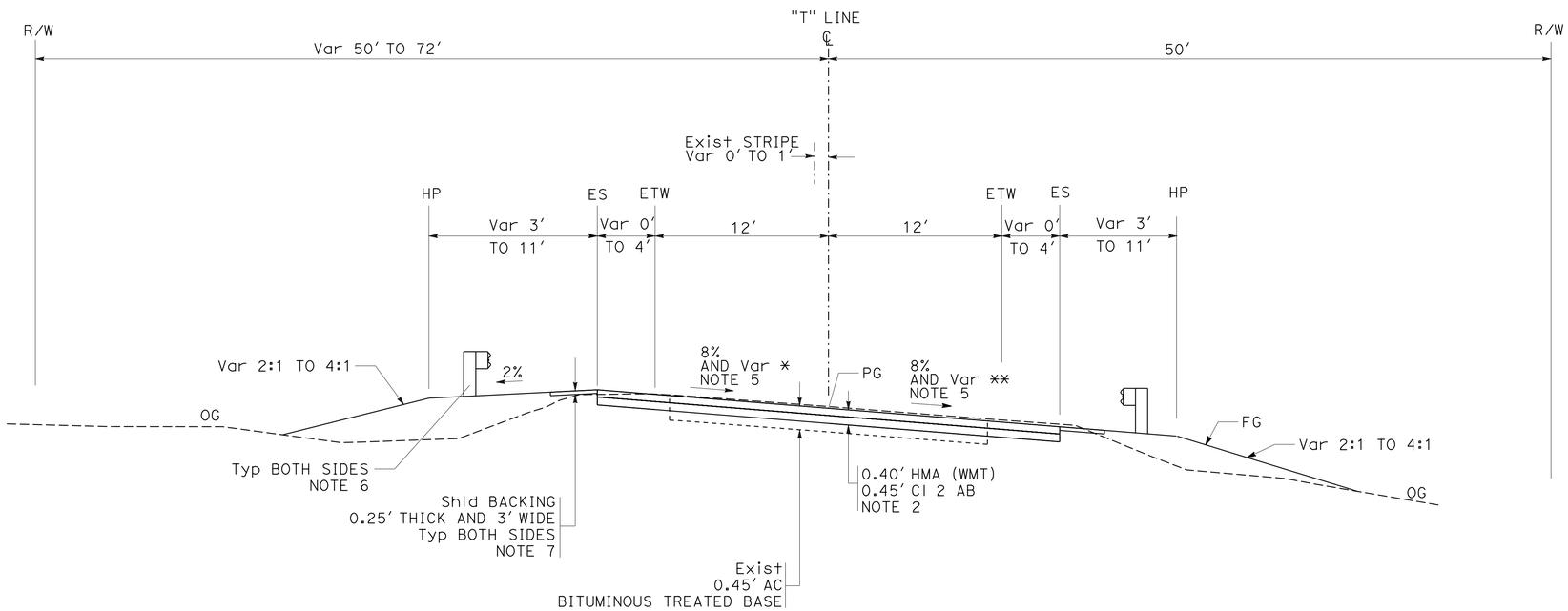

* CROSS SLOPE VARIES 4.6% TO 8%
** CROSS SLOPE VARIES -5.6% TO -8%
SEE NOTE 3

ROUTE 96
"T" 11+70 TO 12+94 (BB)
"T" 14+19 (EB) TO 15+70

LOCATION 1 - THOMPSON CREEK
TYPICAL CROSS SECTIONS
NO SCALE

X-1

STATE OF CALIFORNIA - DEPARTMENT OF TRANSPORTATION
Caltrans
DESIGN
FUNCTIONAL SUPERVISOR: STEVE TOPAL
CALCULATED-DESIGNED BY: LORI EWENS
CHECKED BY: RUSSELL FLOOD
REVISED BY
DATE REVISED
P:\proj1\02\4E650_plans\pse\24e650ca001.dgn

LAST REVISION
DATE PLOTTED => 22-AUG-2016
TIME PLOTTED => 15:20

Dist	COUNTY	ROUTE	POST MILES TOTAL PROJECT	SHEET No.	TOTAL SHEETS
02	Sis	96	R52.5/88.4	3	210

Lori Ewens 06-12-16
REGISTERED CIVIL ENGINEER DATE

06-15-16
PLANS APPROVAL DATE

REGISTERED PROFESSIONAL ENGINEER
LORI EWENS
No. C43919
Exp. 6-30-17
CIVIL
STATE OF CALIFORNIA

THE STATE OF CALIFORNIA OR ITS OFFICERS OR AGENTS SHALL NOT BE RESPONSIBLE FOR THE ACCURACY OR COMPLETENESS OF SCANNED COPIES OF THIS PLAN SHEET.

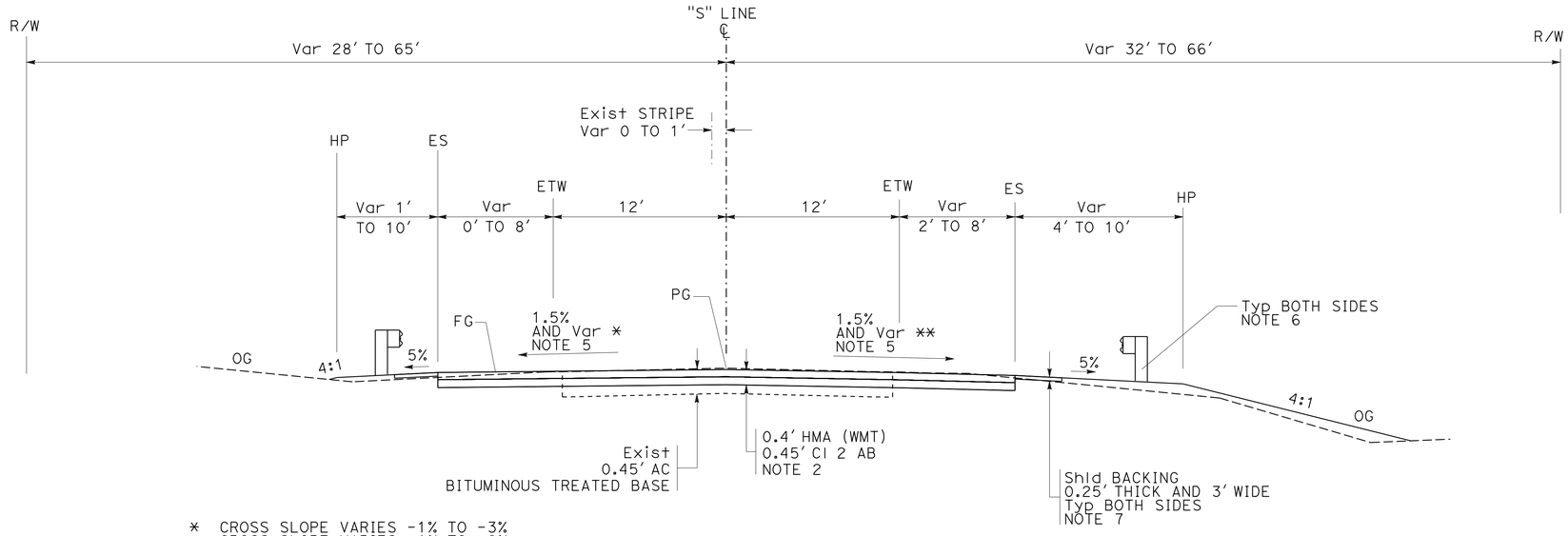

* CROSS SLOPE VARIES -1% TO -3%
** CROSS SLOPE VARIES -1% TO -2%
SEE NOTE 3

ROUTE 96
"S" 9+76 TO 11+28 (BB)
"S" 12+83 (EB) TO 14+90

ABBREVIATIONS:

CPACP COLD PLANE ASPHALT CONCRETE PAVEMENT

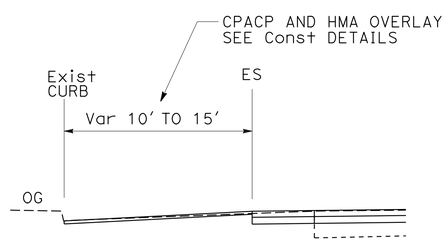

"S" 13+64 (Lt) TO 15+20 (Lt)

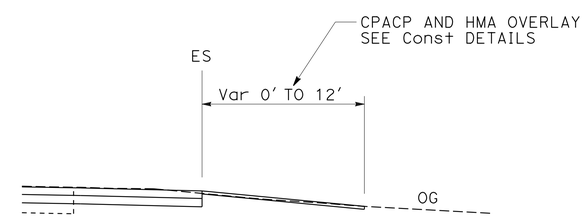

"S" 13+65 (Rt) TO 15+20 (Rt)

ROUTE 96

LOCATION 2 - SEIAD CREEK
TYPICAL CROSS SECTIONS
NO SCALE

X-2

REVISED BY	DATE REVISED

CALCULATED-DESIGNED BY: LORI EWENS
CHECKED BY: RUSSELL FLOOD
FUNCTIONAL SUPERVISOR: STEVE TOPAL

STATE OF CALIFORNIA - DEPARTMENT OF TRANSPORTATION
Caltrans
DESIGN

P:\proj1\02\4E650_plans\pse\24e650ca002.dgn

LAST REVISION
DATE PLOTTED => 22-AUG-2016
TIME PLOTTED => 15:20

Dist	COUNTY	ROUTE	POST MILES TOTAL PROJECT	SHEET No.	TOTAL SHEETS
02	Sis	96	R52.5/88.4	4	210

Lori Ewens 06-12-16
REGISTERED CIVIL ENGINEER DATE

06-15-16
PLANS APPROVAL DATE

REGISTERED PROFESSIONAL ENGINEER
LORI EWENS
No. C43919
Exp. 6-30-17
CIVIL
STATE OF CALIFORNIA

THE STATE OF CALIFORNIA OR ITS OFFICERS OR AGENTS SHALL NOT BE RESPONSIBLE FOR THE ACCURACY OR COMPLETENESS OF SCANNED COPIES OF THIS PLAN SHEET.

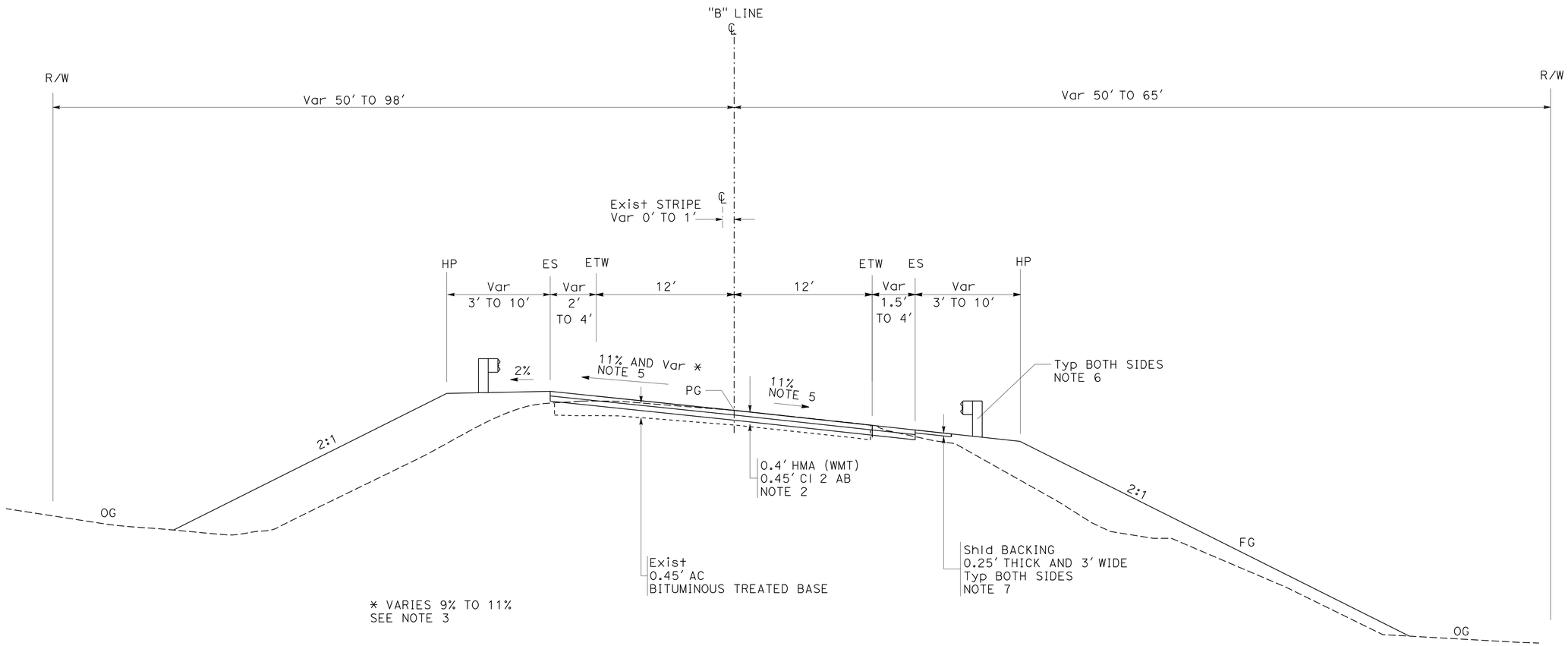

ROUTE 96

"B" 11+10 TO 12+08 (BB)
"B" 13+58 (EB) TO 14+92

LOCATION 3 - BEAVER CREEK
TYPICAL CROSS SECTIONS

NO SCALE

X-3

REVISED BY	DATE REVISED

CALCULATED-DESIGNED BY: LORI EWENS
CHECKED BY: RUSSELL FLOOD
FUNCTIONAL SUPERVISOR: STEVE TOPAL

STATE OF CALIFORNIA - DEPARTMENT OF TRANSPORTATION
Caltrans®
DESIGN

P:\proj1\02\4E650_plans\pse\24e650ca003.dgn

LAST REVISION
DATE PLOTTED => 22-AUG-2016
TIME PLOTTED => 15:20

Dist	COUNTY	ROUTE	POST MILES TOTAL PROJECT	SHEET No.	TOTAL SHEETS
02	Sis	96	R52.5/88.4	5	210

Lori Ewens 06-12-16
REGISTERED CIVIL ENGINEER DATE

06-15-16
PLANS APPROVAL DATE

REGISTERED PROFESSIONAL ENGINEER LORI EWENS No. C43919 Exp. 6-30-17 CIVIL STATE OF CALIFORNIA

THE STATE OF CALIFORNIA OR ITS OFFICERS OR AGENTS SHALL NOT BE RESPONSIBLE FOR THE ACCURACY OR COMPLETENESS OF SCANNED COPIES OF THIS PLAN SHEET.

NOTES:

1. FOR ACCURATE RIGHT OF WAY DATA, CONTACT RIGHT OF WAY ENGINEERING AT THE DISTRICT OFFICE.
2. FOR BRIDGE BARRIER RAIL SEE STRUCTURE PLANS.
3. FOR RETAINING WALLS SEE STRUCTURE PLANS.
4. FOR METAL BEAM GUARDRAIL SYSTEM SEE CONSTRUCTION DETAILS.
5. FOR PAVEMENT CONFORM SEE CONSTRUCTION DETAILS.
6. FOR ENVIRONMENTALLY SENSITIVE AREAS (TFESA) SEE CONSTRUCTION DETAILS.
7. FOR UTILITY DETAILS SEE UTILITY DETAILS.

ABBREVIATIONS:

CPACP COLD PLANE ASPHALT CONCRETE PAVEMENT

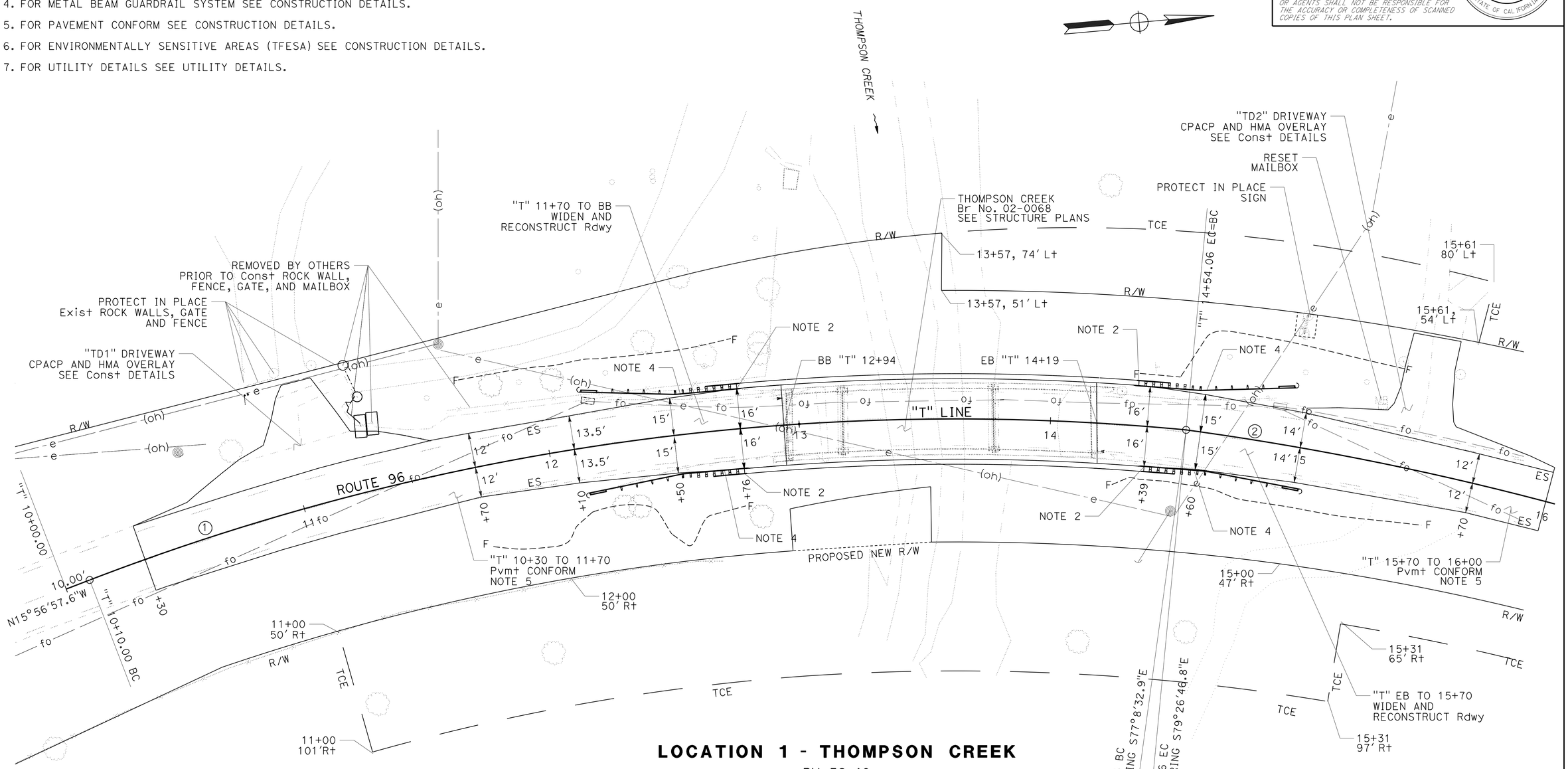

LOCATION 1 - THOMPSON CREEK

PM 52.48

CURVE DATA "T" LINE

No.	R	△	T	L
1	959.99'	26°30'11"	226.07'	444.06'
2	1194.25'	22°43'12.2"	104.30'	205.57'

LAYOUT

SCALE: 1" = 20' **L-1**

REVISED BY | DATE REVISED
LORI EWENS | RUSSELL FLOOD
CALCULATED-DESIGNED BY | CHECKED BY
FUNCTIONAL SUPERVISOR | STEVE TOPAL
STATE OF CALIFORNIA - DEPARTMENT OF TRANSPORTATION
Caltrans® DESIGN
P:\proj\02\4E650_plans\pse\24e650ea001.dgn

LAST REVISION | DATE PLOTTED => 22-AUG-2016 | TIME PLOTTED => 15:20

BORDER LAST REVISED 7/2/2010 | USERNAME => s115152 | DGN FILE => 24e650ea001.dgn | RELATIVE BORDER SCALE IS IN INCHES 0 1 2 3 | UNIT 0319 | PROJECT NUMBER & PHASE 02 1200 0012 1

Dist	COUNTY	ROUTE	POST MILES TOTAL PROJECT	SHEET No.	TOTAL SHEETS
02	Sis	96	R52.5/88.4	6	210

Lori Ewens 06-12-16
REGISTERED CIVIL ENGINEER DATE

06-15-16
PLANS APPROVAL DATE

REGISTERED PROFESSIONAL ENGINEER LORI EWENS No. C43919 Exp. 6-30-17 CIVIL STATE OF CALIFORNIA

THE STATE OF CALIFORNIA OR ITS OFFICERS OR AGENTS SHALL NOT BE RESPONSIBLE FOR THE ACCURACY OR COMPLETENESS OF SCANNED COPIES OF THIS PLAN SHEET.

NOTE:

1. FOR ACCURATE RIGHT OF WAY DATA, CONTACT RIGHT OF WAY ENGINEERING AT THE DISTRICT OFFICE.

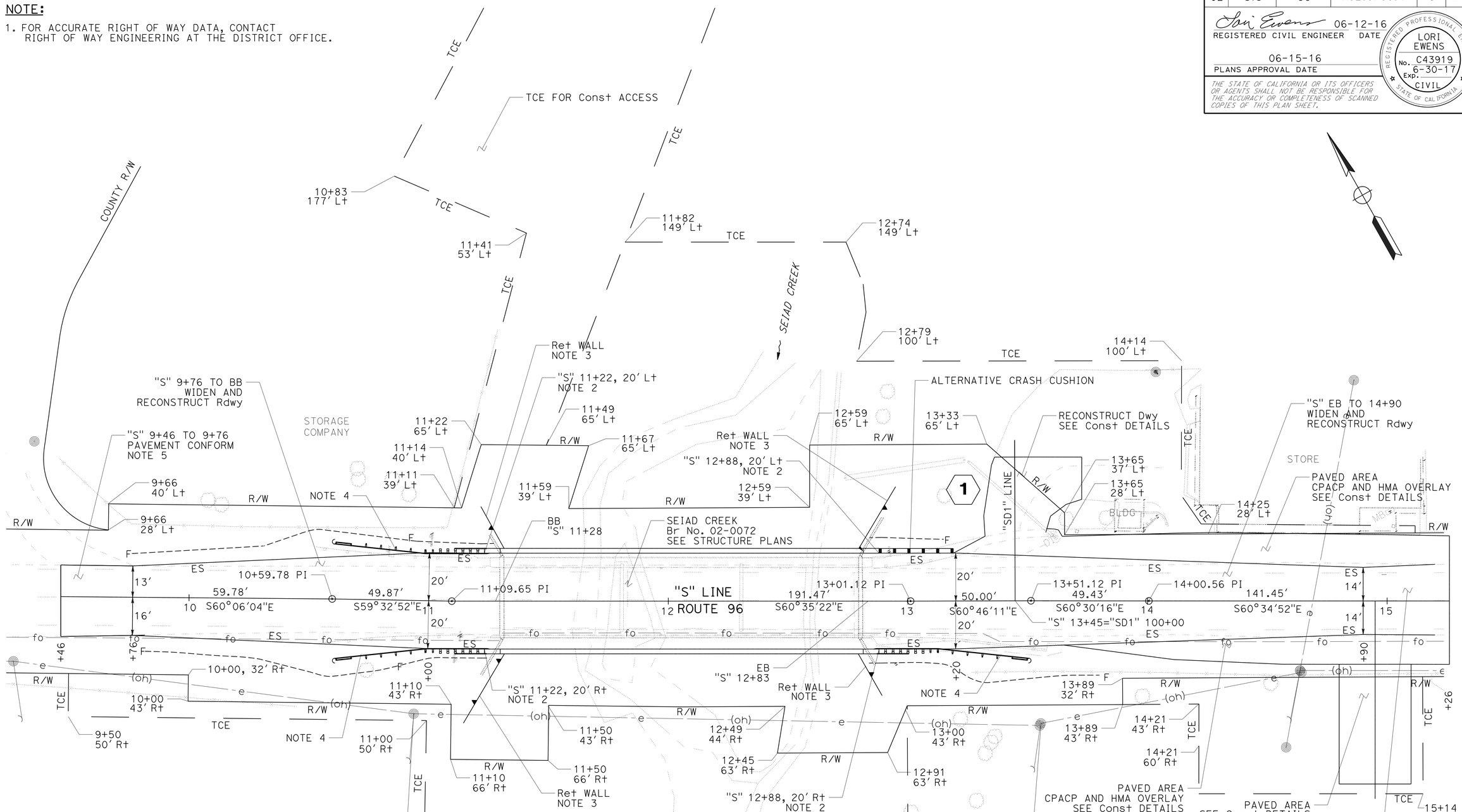

LOCATION 2 - SEIAD CREEK

PM 60.17

LAYOUT

SCALE: 1" = 20'

L-2

REVISED BY | DATE REVISED
LORI EWENS | RUSSELL FLOOD
CALCULATED-DESIGNED BY | CHECKED BY
FUNCTIONAL SUPERVISOR | STEVE TOPAL
STATE OF CALIFORNIA - DEPARTMENT OF TRANSPORTATION
Caltrans
DESIGN

LAST REVISION | DATE PLOTTED => 22-AUG-2016 | TIME PLOTTED => 15:20

P:\proj1\02\4E650_plans\pse\24e650ea002.dgn

Dist	COUNTY	ROUTE	POST MILES TOTAL PROJECT	SHEET No.	TOTAL SHEETS
02	Sis	96	R52.5/88.4	7	210

Lori Ewens 06-12-16
REGISTERED CIVIL ENGINEER DATE

06-15-16
PLANS APPROVAL DATE

REGISTERED PROFESSIONAL ENGINEER LORI EWENS No. C43919 Exp. 6-30-17 CIVIL STATE OF CALIFORNIA

THE STATE OF CALIFORNIA OR ITS OFFICERS OR AGENTS SHALL NOT BE RESPONSIBLE FOR THE ACCURACY OR COMPLETENESS OF SCANNED COPIES OF THIS PLAN SHEET.

NOTE:

1. FOR ACCURATE RIGHT OF WAY DATA, CONTACT RIGHT OF WAY ENGINEERING AT THE DISTRICT OFFICE.

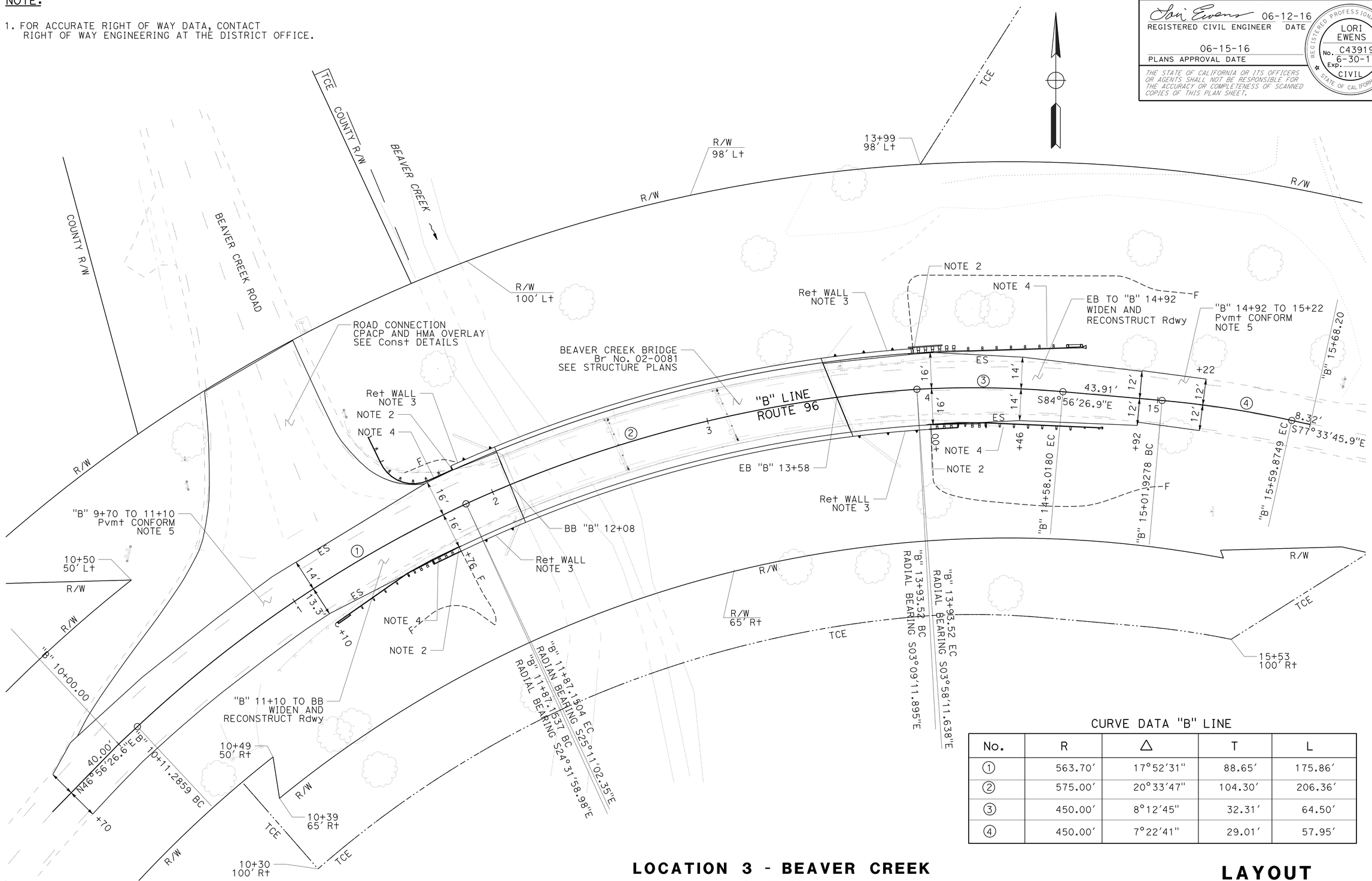

CURVE DATA "B" LINE

No.	R	Δ	T	L
1	563.70'	17°52'31"	88.65'	175.86'
2	575.00'	20°33'47"	104.30'	206.36'
3	450.00'	8°12'45"	32.31'	64.50'
4	450.00'	7°22'41"	29.01'	57.95'

LOCATION 3 - BEAVER CREEK
PM 88.26

LAYOUT
SCALE: 1" = 20'

L-3

REVISED BY | DATE REVISED
LORI EWENS | RUSSELL FLOOD
CALCULATED-DESIGNED BY | CHECKED BY
FUNCTIONAL SUPERVISOR: STEVE TOPAL
STATE OF CALIFORNIA - DEPARTMENT OF TRANSPORTATION
Caltrans® DESIGN

P:\proj1\02\4E650_plans\pse\24e650ea003.dgn

LAST REVISION | DATE PLOTTED => 22-AUG-2016 | TIME PLOTTED => 15:20

BORDER LAST REVISED 7/2/2010 | USERNAME => s115152 | DGN FILE => 24e650ea003.dgn | RELATIVE BORDER SCALE IS IN INCHES 0 1 2 3 | UNIT 0319 | PROJECT NUMBER & PHASE 02 1200 0012 1

Dist	COUNTY	ROUTE	POST MILES TOTAL PROJECT	SHEET No.	TOTAL SHEETS
02	Sis	96	R52.5/88.4	8	210

Lori Ewens 06-12-16
REGISTERED CIVIL ENGINEER DATE

06-15-16
PLANS APPROVAL DATE

REGISTERED PROFESSIONAL ENGINEER
LORI EWENS
No. C43919
Exp. 6-30-17
CIVIL
STATE OF CALIFORNIA

THE STATE OF CALIFORNIA OR ITS OFFICERS OR AGENTS SHALL NOT BE RESPONSIBLE FOR THE ACCURACY OR COMPLETENESS OF SCANNED COPIES OF THIS PLAN SHEET.

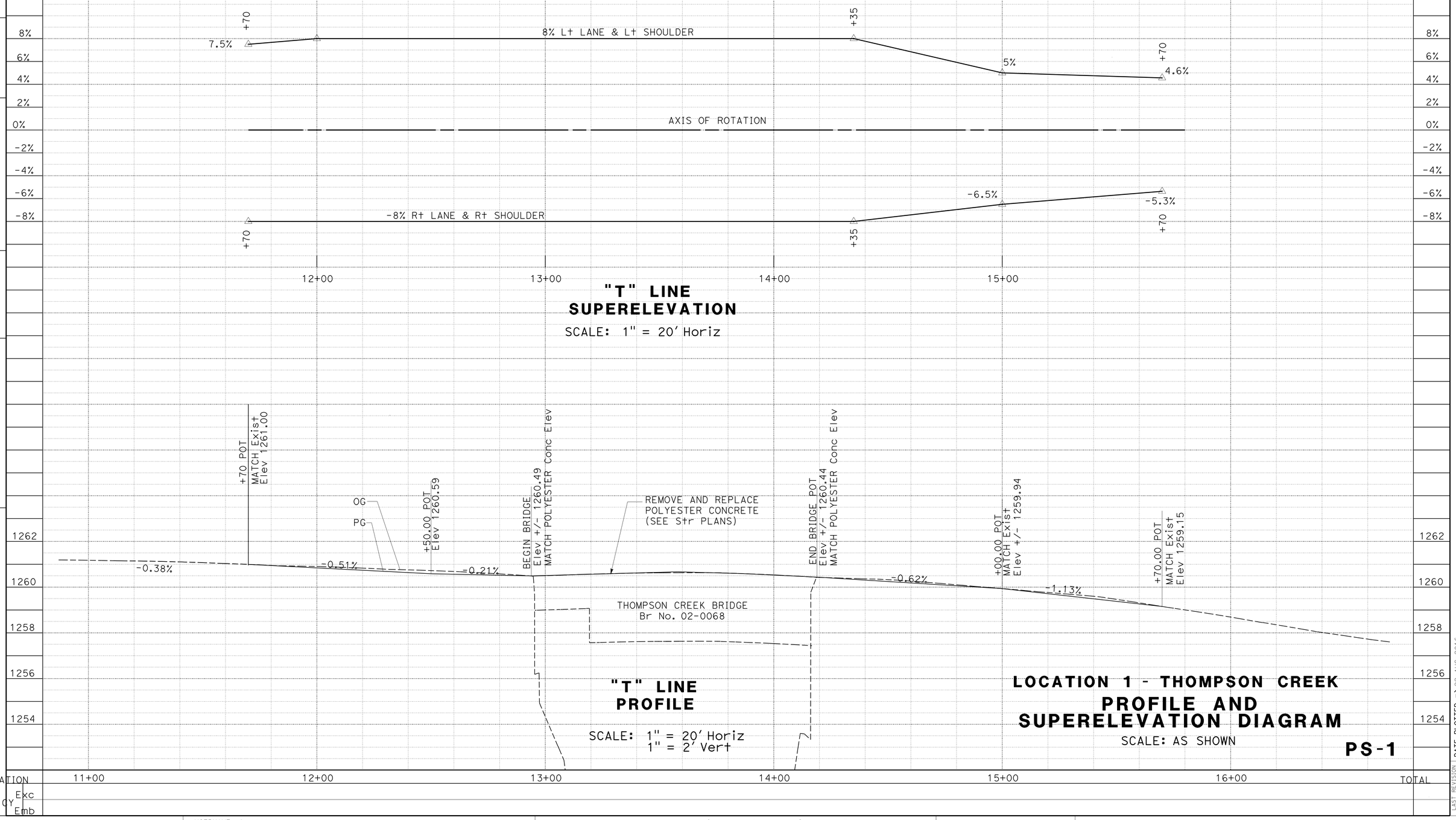

REVISED BY | DATE REVISED
LORI EWENS | RUSSELL FLOOD
CALCULATED-DESIGNED BY | CHECKED BY
FUNCTIONAL SUPERVISOR
STEVE TOPAL

STATE OF CALIFORNIA - DEPARTMENT OF TRANSPORTATION
DESIGN
Caltrans

P:\proj1\02\4E650_plans\pse\24e650fb001.dgn

LAST REVISION | DATE PLOTTED => 22-AUG-2016
TIME PLOTTED => 15:20

Dist	COUNTY	ROUTE	POST MILES TOTAL PROJECT	SHEET No.	TOTAL SHEETS
02	Sis	96	R52.5/88.4	9	210

Lori Ewens 06-12-16
REGISTERED CIVIL ENGINEER DATE

06-15-16
PLANS APPROVAL DATE

REGISTERED PROFESSIONAL ENGINEER
LORI EWENS
No. C43919
Exp. 6-30-17
CIVIL
STATE OF CALIFORNIA

THE STATE OF CALIFORNIA OR ITS OFFICERS OR AGENTS SHALL NOT BE RESPONSIBLE FOR THE ACCURACY OR COMPLETENESS OF SCANNED COPIES OF THIS PLAN SHEET.

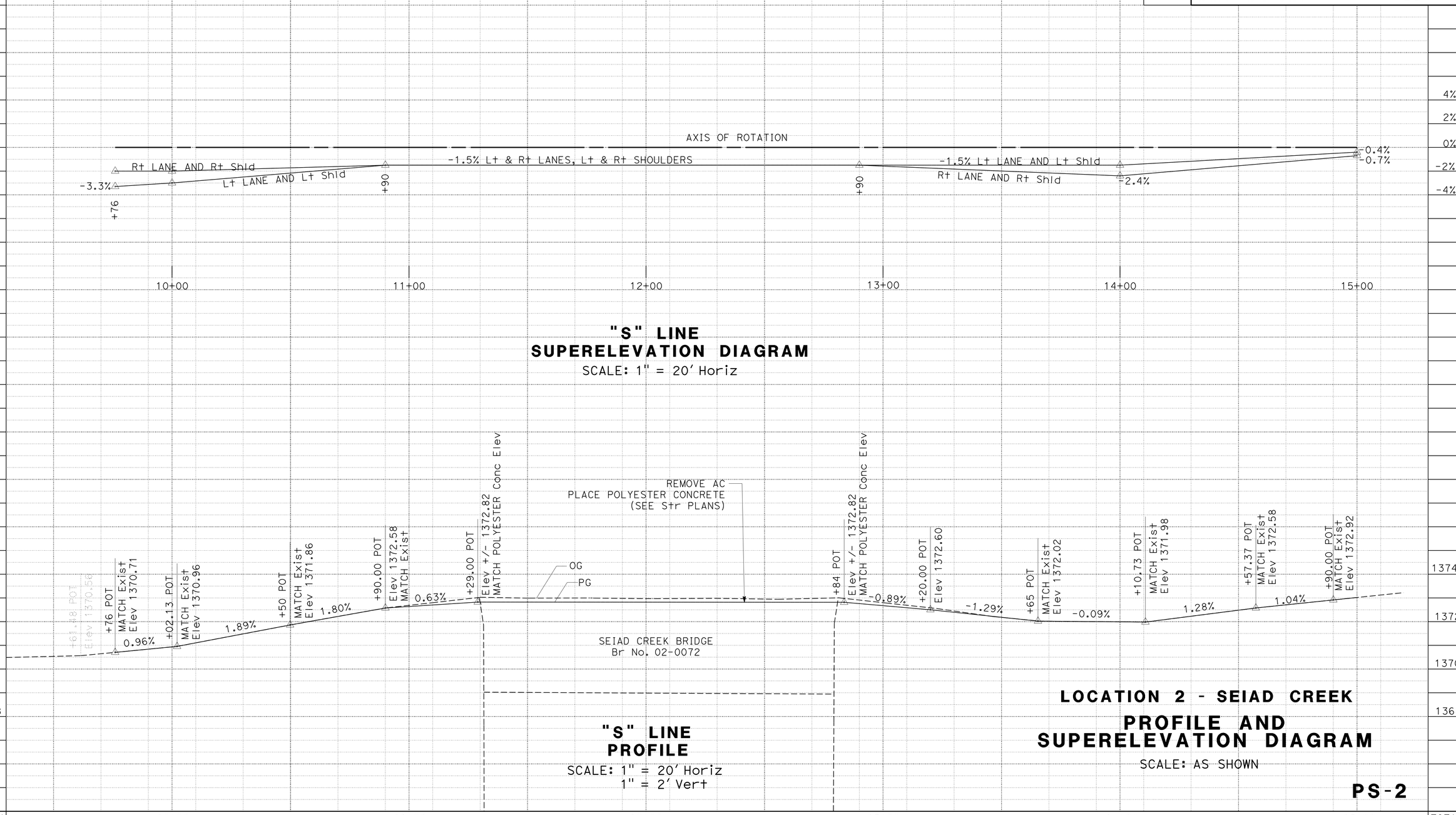

"S" LINE SUPERELEVATION DIAGRAM

SCALE: 1" = 20' Horiz

"S" LINE PROFILE

SCALE: 1" = 20' Horiz
1" = 2' Vert

LOCATION 2 - SEIAD CREEK PROFILE AND SUPERELEVATION DIAGRAM

SCALE: AS SHOWN

PS-2

STATION	10+00	11+00	12+00	13+00	14+00	15+00	TOTAL
CY Exc							
CY Emb							

REVISED BY | DATE REVISED
LOR EWENS | RUSSELL FLOOD
CALCULATED-DESIGNED BY | CHECKED BY
FUNCTIONAL SUPERVISOR | STEVE TOPAL

STATE OF CALIFORNIA - DEPARTMENT OF TRANSPORTATION
Caltrans
DESIGN

P:\proj1\02\4E650_plans\pse\24e650fb002.dgn

LAST REVISION 02/10/15 | DATE PLOTTED => 22-AUG-2016 | TIME PLOTTED => 15:20

Dist	COUNTY	ROUTE	POST MILES TOTAL PROJECT	SHEET No.	TOTAL SHEETS
02	Sis	96	R52.5/88.4	10	210

Lori Ewens 06-12-16
REGISTERED CIVIL ENGINEER DATE

06-15-16
PLANS APPROVAL DATE

REGISTERED PROFESSIONAL ENGINEER LORI EWENS No. C43919 Exp. 6-30-17 CIVIL STATE OF CALIFORNIA

THE STATE OF CALIFORNIA OR ITS OFFICERS OR AGENTS SHALL NOT BE RESPONSIBLE FOR THE ACCURACY OR COMPLETENESS OF SCANNED COPIES OF THIS PLAN SHEET.

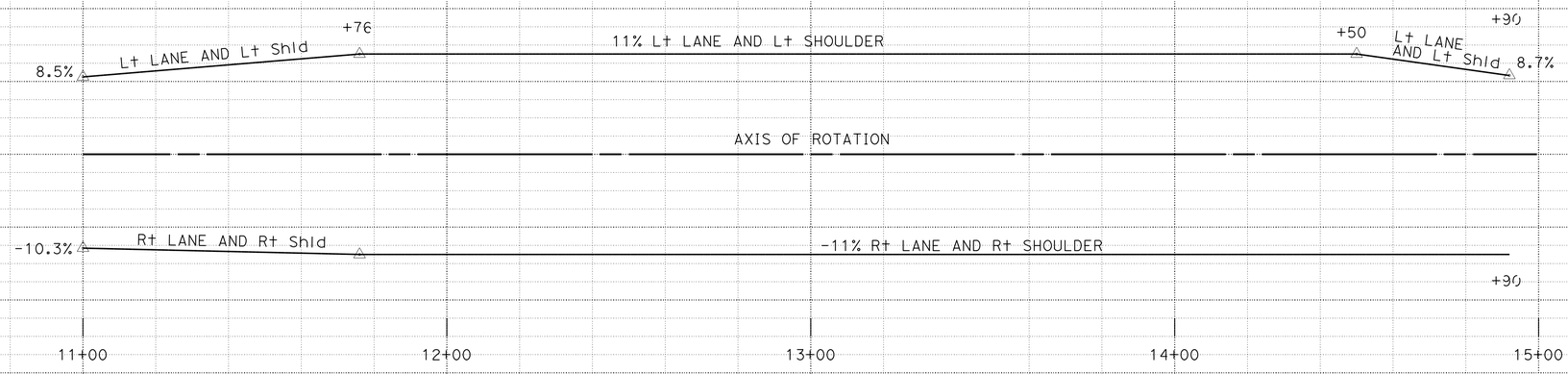

"B" LINE SUPERELEVATION
SCALE: 1" = 20' Horiz

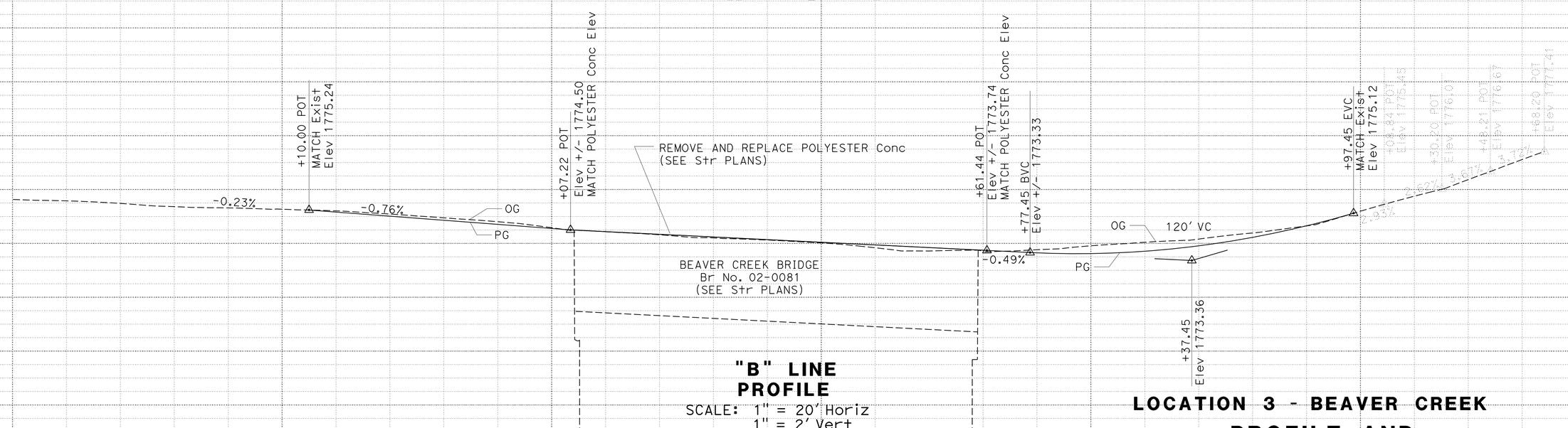

"B" LINE PROFILE
SCALE: 1" = 20' Horiz
1" = 2' Vert

LOCATION 3 - BEAVER CREEK

PROFILE AND SUPERELEVATION DIAGRAM
SCALE: AS SHOWN

PS-3

STATION		11+00	12+00	13+00	14+00	15+00	TOTAL
CY	Exc						
	Emb						

REVISED BY | DATE REVISED
LORI EWENS | RUSSELL FLOOD
CALCULATED-DESIGNED BY | CHECKED BY
FUNCTIONAL SUPERVISOR | STEVE TOPAL

STATE OF CALIFORNIA - DEPARTMENT OF TRANSPORTATION
Caltrans
DESIGN

P:\proj1\02\4E650_plans\pse\24e650fb003.dgn

LAST REVISION | DATE PLOTTED => 22-AUG-2016 | TIME PLOTTED => 15:20

Dist	COUNTY	ROUTE	POST MILES TOTAL PROJECT	SHEET No.	TOTAL SHEETS
02	Sis	96	R52.5/88.4	11	210

Lori Ewens 06-12-16
REGISTERED CIVIL ENGINEER DATE

06-15-16
PLANS APPROVAL DATE

REGISTERED PROFESSIONAL ENGINEER LORI EWENS No. C43919 Exp. 6-30-17 CIVIL STATE OF CALIFORNIA

THE STATE OF CALIFORNIA OR ITS OFFICERS OR AGENTS SHALL NOT BE RESPONSIBLE FOR THE ACCURACY OR COMPLETENESS OF SCANNED COPIES OF THIS PLAN SHEET.

NOTE:

1. FOR ACCURATE RIGHT OF WAY DATA, CONTACT RIGHT OF WAY ENGINEERING AT THE DISTRICT OFFICE.

LEGEND:

COLD PLANE ASPHALT CONCRETE PAVEMENT AND HMA (WMT)

ROADWAY EXCAVATION AND HMA (WMT)

ABBREVIATIONS:

CPACP	COLD PLANE ASPHALT CONCRETE PAVEMENT
VC	VEGETATION CONTROL
HMA (WMT)	HOT MIX ASPHALT (TYPE A, WARM MIX TECHNOLOGY)

MAILBOX NOTES:

1. REDWOOD MATERIAL SHALL BE 2" x 6" OR 2" x 8" TRIMMED TO FIT WITHIN BOTTOM OF MAILBOX FLANGES.
2. NEWSPAPER RECEPTACLES TREAT AS MAILBOX.
3. DETAILS SHOWN ARE FOR 6" WIDTH MAIL BOXES. CONTRACTOR SHALL VERIFY DIMENSIONS IN THE FIELD.
4. MAILBOX SUPPORT HARDWARE SHALL BE GALVANIZED STEEL.

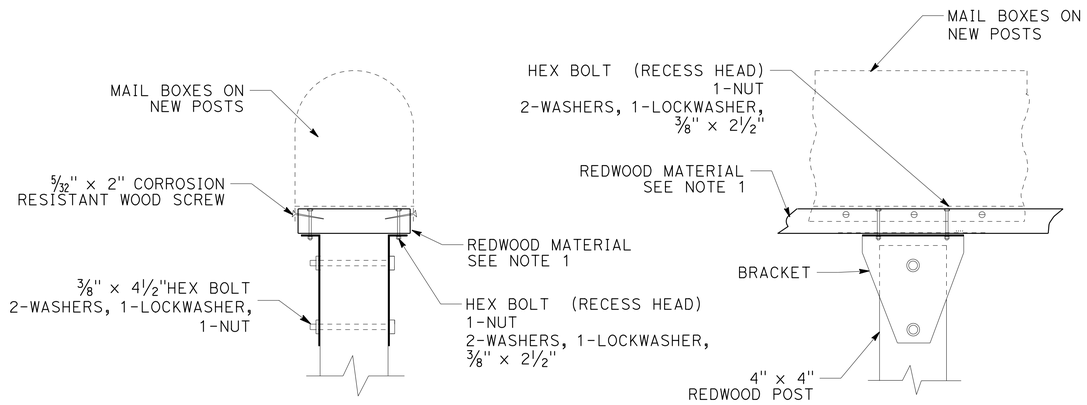

SINGLE MAILBOX ASSEMBLES

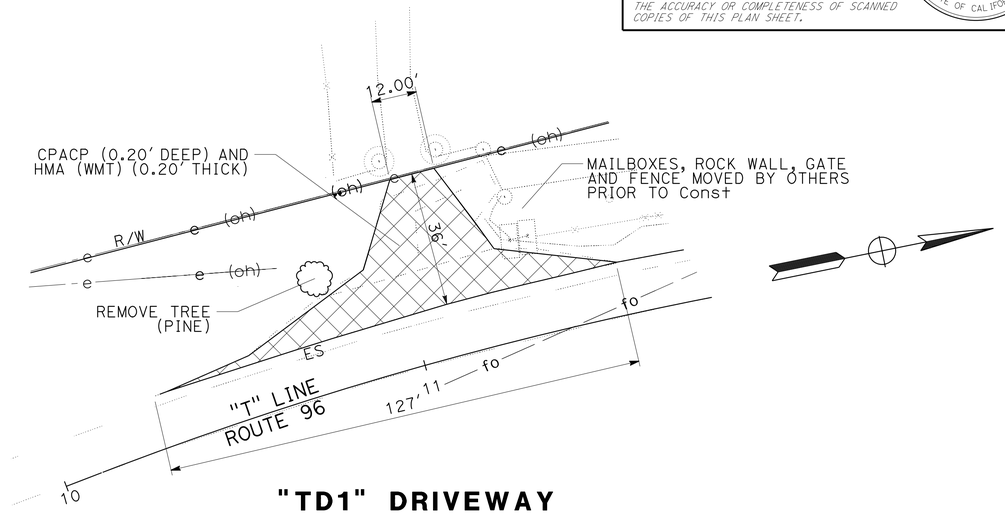

"TD1" DRIVEWAY
LOCATION 1 - THOMPSON CREEK

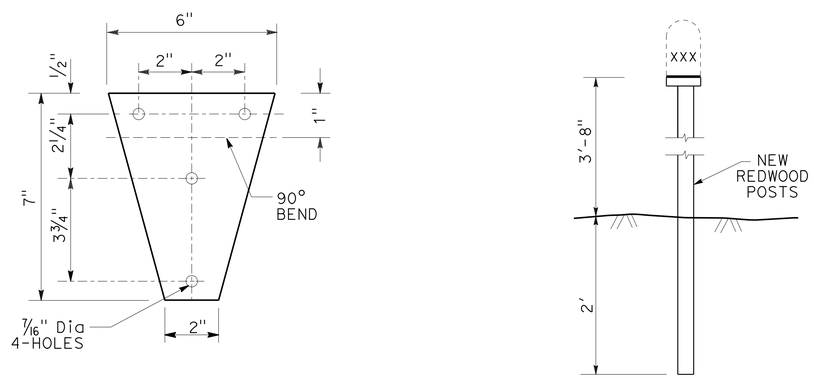

BRACKET SETTING

RESET MAILBOX

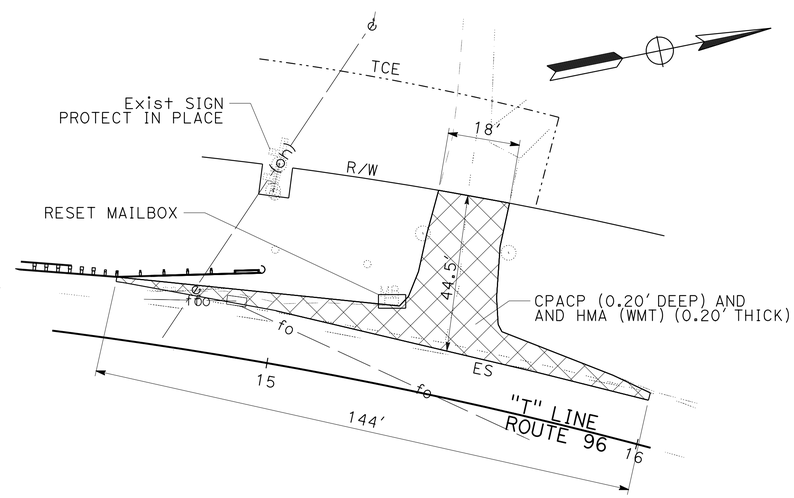

"TD2" DRIVEWAY
LOCATION 1 - THOMPSON CREEK

CONSTRUCTION DETAILS DRIVEWAYS

NO SCALE

C-1

REVISED BY | DATE REVISED
LORI EWENS | RUSSELL FLOOD
CALCULATED-DESIGNED BY | CHECKED BY
FUNCTIONAL SUPERVISOR: STEVE TOPAL
STATE OF CALIFORNIA - DEPARTMENT OF TRANSPORTATION
Caltrans DESIGN
P:\proj1\02\4E650_plans\pse\24e650ga001.dgn

LAST REVISION | DATE PLOTTED => 22-AUG-2016 | TIME PLOTTED => 15:20

Dist	COUNTY	ROUTE	POST MILES TOTAL PROJECT	SHEET No.	TOTAL SHEETS
02	Sis	96	R52.5/88.4	12	210

Lori Ewens 06-12-16
REGISTERED CIVIL ENGINEER DATE

06-15-16
PLANS APPROVAL DATE

REGISTERED PROFESSIONAL ENGINEER
LORI EWENS
No. C43919
Exp. 6-30-17
CIVIL
STATE OF CALIFORNIA

THE STATE OF CALIFORNIA OR ITS OFFICERS OR AGENTS SHALL NOT BE RESPONSIBLE FOR THE ACCURACY OR COMPLETENESS OF SCANNED COPIES OF THIS PLAN SHEET.

NOTE:

1. FOR ACCURATE RIGHT OF WAY DATA, CONTACT RIGHT OF WAY ENGINEERING AT THE DISTRICT OFFICE.

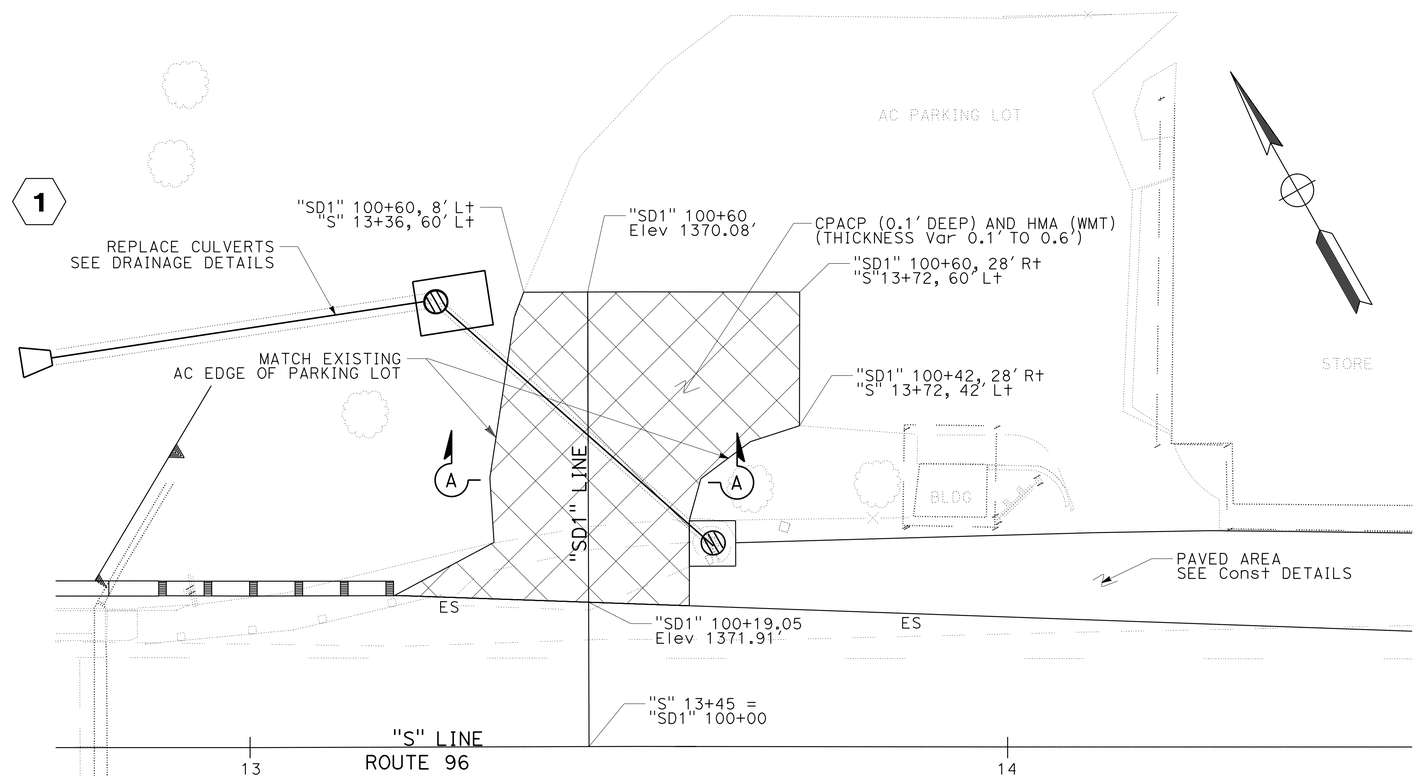

"SD1" DRIVEWAY

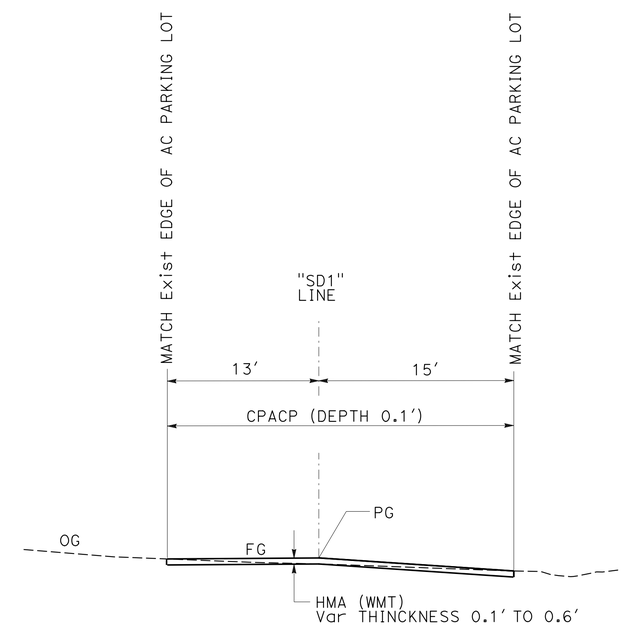

SECTION A-A

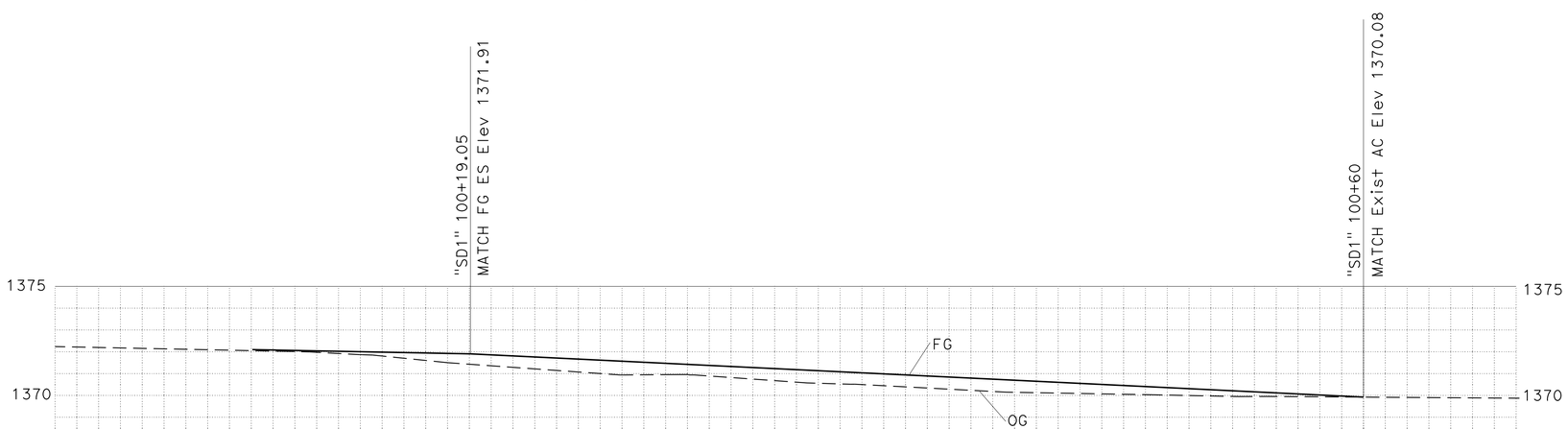

"SD1" PROFILE

LOCATION 2 - SEIAD CREEK
CONSTRUCTION DETAILS
DRIVEWAY

NO SCALE

C-2

REVISED BY | DATE REVISED
LORI EWENS | RUSSELL FLOOD
CALCULATED-DESIGNED BY | CHECKED BY
FUNCTIONAL SUPERVISOR | STEVE TOPAL
STATE OF CALIFORNIA - DEPARTMENT OF TRANSPORTATION
Caltrans
DESIGN

P:\proj1\02\4E650_plans\pse\24e650ga002.dgn

LAST REVISION | DATE PLOTTED => 22-AUG-2016 | TIME PLOTTED => 15:20

Dist	COUNTY	ROUTE	POST MILES TOTAL PROJECT	SHEET No.	TOTAL SHEETS
02	Sis	96	R52.5/88.4	13	210

Lori Ewens 06-12-16
REGISTERED CIVIL ENGINEER DATE

06-15-16
PLANS APPROVAL DATE

REGISTERED PROFESSIONAL ENGINEER LORI EWENS No. C43919 Exp. 6-30-17 CIVIL STATE OF CALIFORNIA

THE STATE OF CALIFORNIA OR ITS OFFICERS OR AGENTS SHALL NOT BE RESPONSIBLE FOR THE ACCURACY OR COMPLETENESS OF SCANNED COPIES OF THIS PLAN SHEET.

NOTES:

1. FOR ACCURATE RIGHT OF WAY DATA, CONTACT RIGHT OF WAY ENGINEERING AT THE DISTRICT OFFICE.

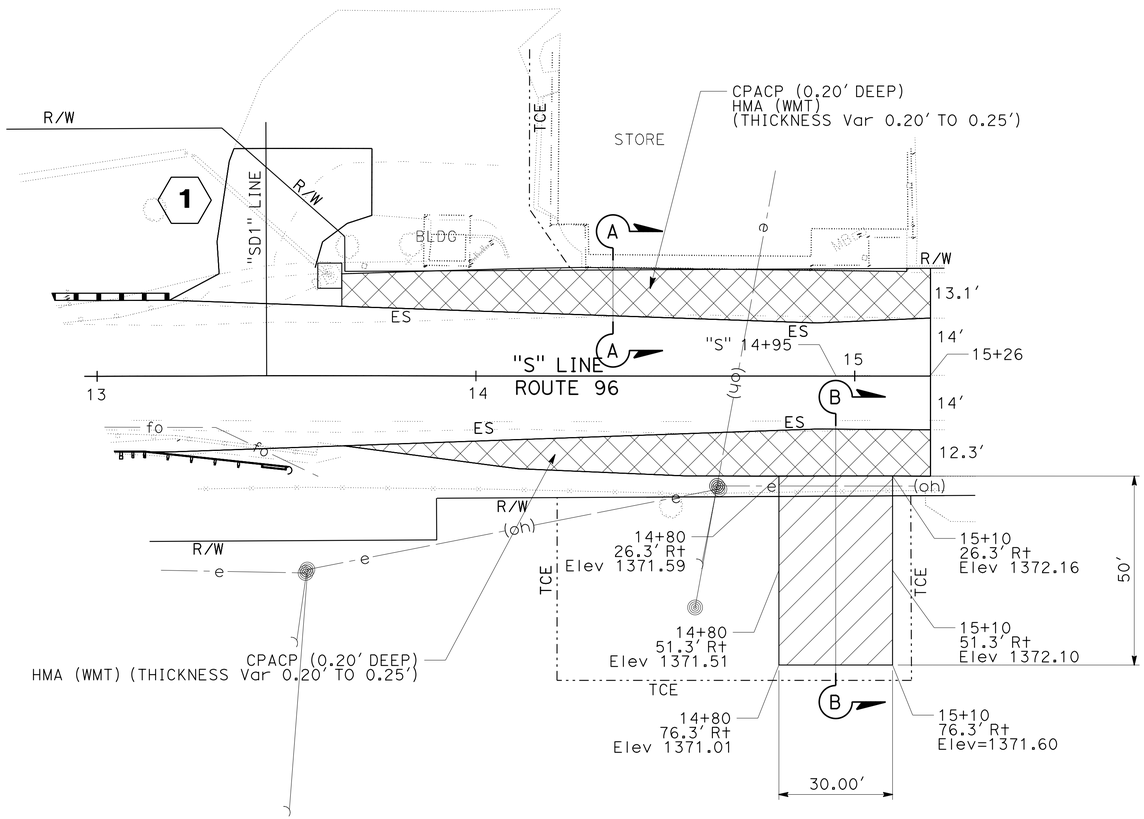

ADDITIONAL PAVED AREAS

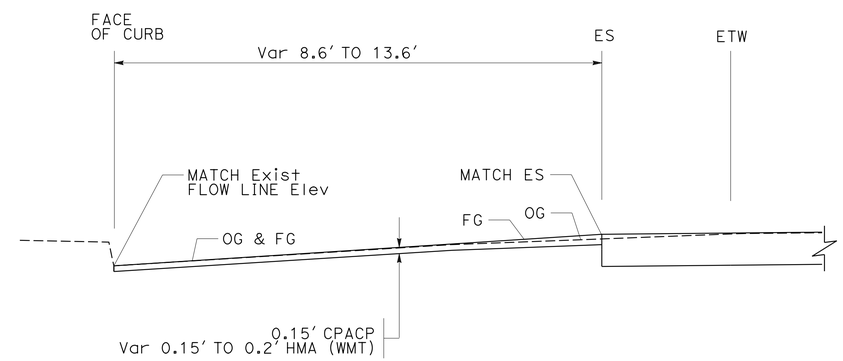

SECTION A-A

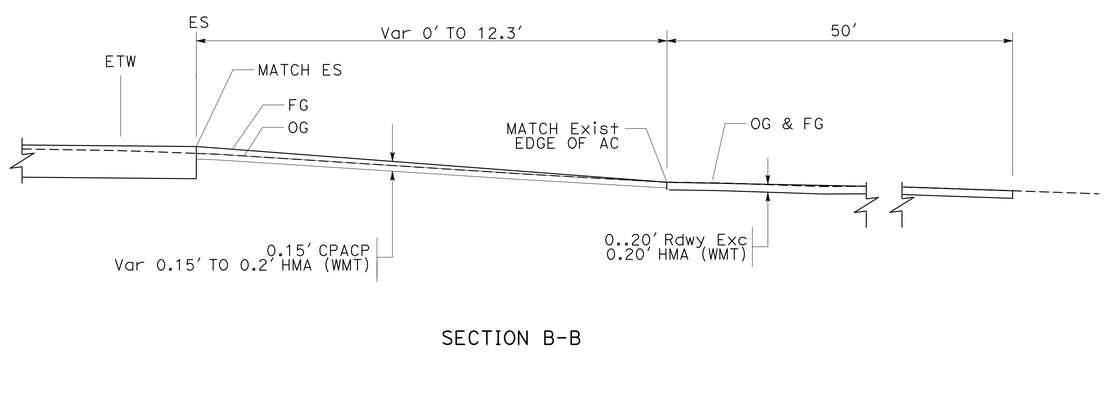

SECTION B-B

CONSTRUCTION DETAILS
LOCATION 2 - SEIAD CREEK

NO SCALE

C-3

REVISED BY	DATE REVISED
LORI EWENS	RUSSELL FLOOD
CALCULATED-DESIGNED BY	CHECKED BY
FUNCTIONAL SUPERVISOR	STEVE TOPAL

STATE OF CALIFORNIA - DEPARTMENT OF TRANSPORTATION
Caltrans® DESIGN

P:\proj1\02\4E650_plans\pse\24e650ga003.dgn

LAST REVISION DATE PLOTTED => 22-AUG-2016 TIME PLOTTED => 15:20

Dist	COUNTY	ROUTE	POST MILES TOTAL PROJECT	SHEET No.	TOTAL SHEETS
02	Sis	96	R52.5/88.4	14	210

Lori Ewens 06-12-16
REGISTERED CIVIL ENGINEER DATE

06-15-16
PLANS APPROVAL DATE

REGISTERED PROFESSIONAL ENGINEER
LORI EWENS
No. C43919
Exp. 6-30-17
CIVIL
STATE OF CALIFORNIA

THE STATE OF CALIFORNIA OR ITS OFFICERS OR AGENTS SHALL NOT BE RESPONSIBLE FOR THE ACCURACY OR COMPLETENESS OF SCANNED COPIES OF THIS PLAN SHEET.

NOTE:

1. FOR ACCURATE RIGHT OF WAY DATA, CONTACT RIGHT OF WAY ENGINEERING AT THE DISTRICT OFFICE.

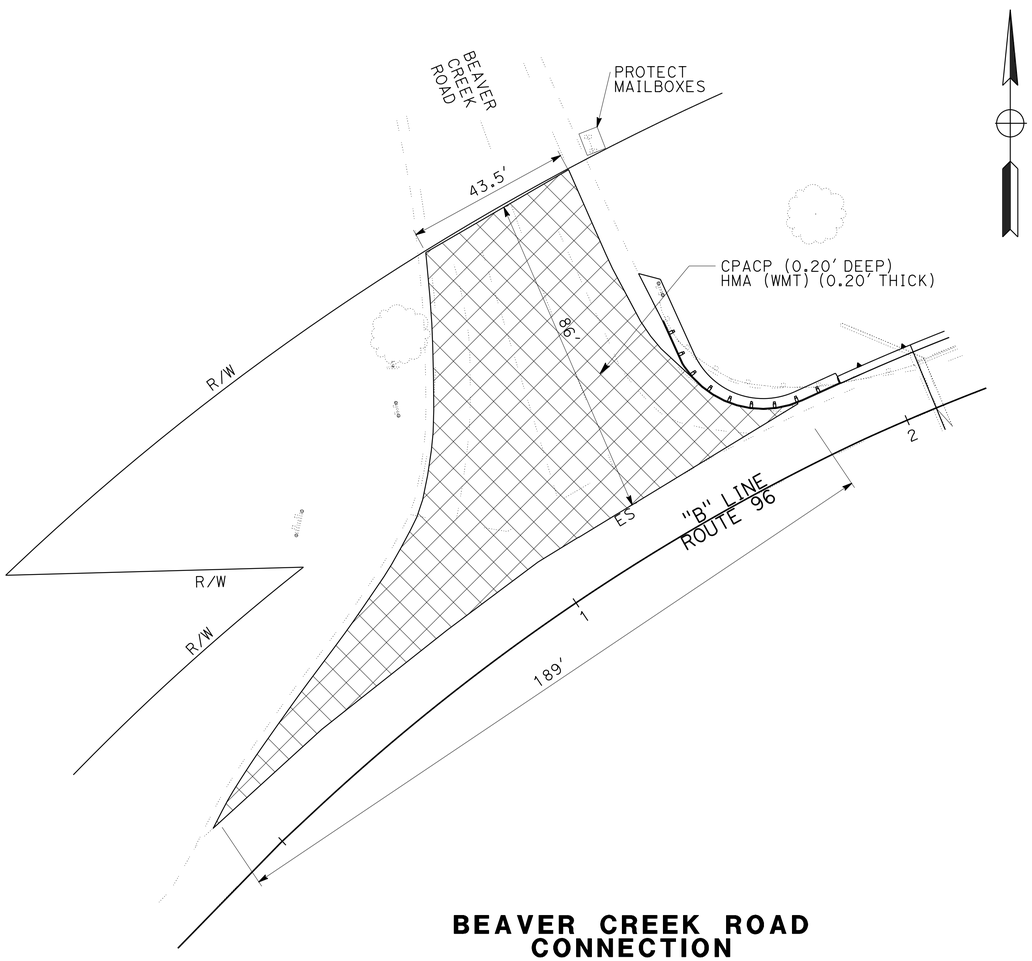

BEAVER CREEK ROAD CONNECTION

LOCATION 3 - BEAVER

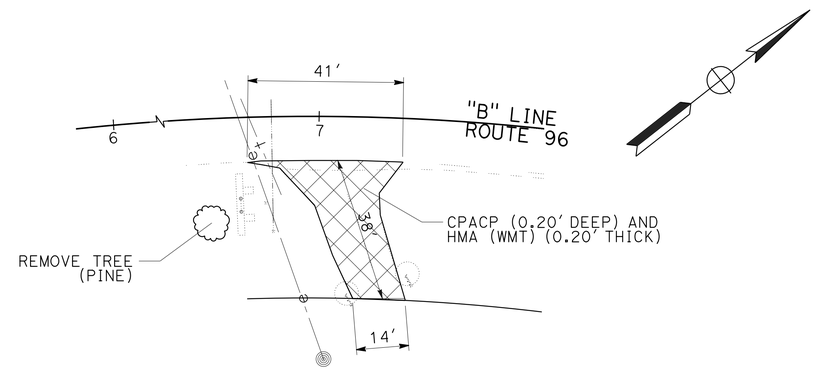

DRIVEWAY

LOCATION 3 - BEAVER CREE
"B" 7+00 Rt (PM 88.2)

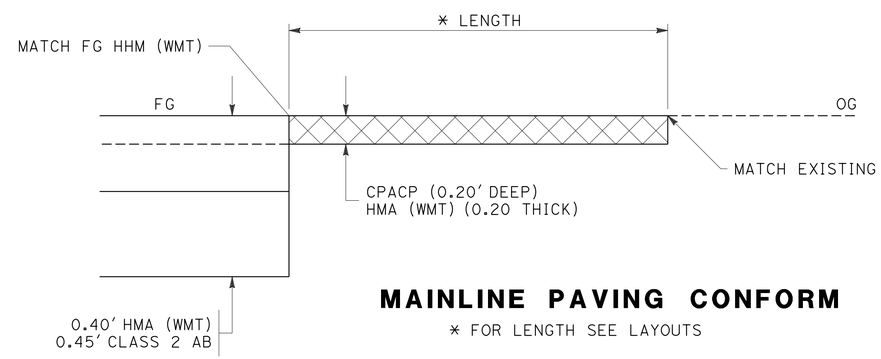

MAINLINE PAVING CONFORM

* FOR LENGTH SEE LAYOUTS

CONSTRUCTION DETAILS

NO SCALE

C-4

REVISED BY	DATE REVISED

CALCULATED-DESIGNED BY	CHECKED BY
LORI EWENS	RUSSELL FLOOD

FUNCTIONAL SUPERVISOR: STEVE TOPAL

STATE OF CALIFORNIA - DEPARTMENT OF TRANSPORTATION
Caltrans
DESIGN

P:\proj1\02\4E650_plans\pse\24e650ga004.dgn

LAST REVISION | DATE PLOTTED => 22-AUG-2016 | TIME PLOTTED => 15:20

Dist	COUNTY	ROUTE	POST MILES TOTAL PROJECT	SHEET No.	TOTAL SHEETS
02	Sis	96	R52.5/88.4	15	210

Lori Ewens 06-12-16
REGISTERED CIVIL ENGINEER DATE

06-15-16
PLANS APPROVAL DATE

REGISTERED PROFESSIONAL ENGINEER LORI EWENS No. C43919 Exp. 6-30-17 CIVIL STATE OF CALIFORNIA

THE STATE OF CALIFORNIA OR ITS OFFICERS OR AGENTS SHALL NOT BE RESPONSIBLE FOR THE ACCURACY OR COMPLETENESS OF SCANNED COPIES OF THIS PLAN SHEET.

NOTES:

1. FOR VEGETATION CONTROL SEE 2010 STANDARD PLANS, SHEETS RSP A77N6 AND RSP A77N7.
2. FOR TYPICAL LAYOUTS FOR STRUCTURE APPROACH SEE 2010 STANDARD PLANS SHEET RSP A77Q1. STRUCTURE DEPARTURE LAYOUT IS THE SAME AS APPROACH LAYOUT.
3. USE WOOD POST FOR ALL MBGR, TERMINAL END SYSTEMS, TRANSITION RAILING, AND STBB.
4. FOR BRIDGE BARRIER RAIL SEE STRUCTURE PLANS.
5. STAIN GALVANIZED SURFACES OF METAL BEAM GUARDRAIL SYSTEM AND BRIDGE RAIL.
6. FOR STBB THAT HAS 25′ RADIUS, USE 3.125′ POST SPACING.
7. FOR ACCURATE RIGHT OF WAY DATA, CONTACT RIGHT OF WAY ENGINEERING AT THE DISTRICT OFFICE.

ABBREVIATIONS:

VC VEGETATION CONTROL

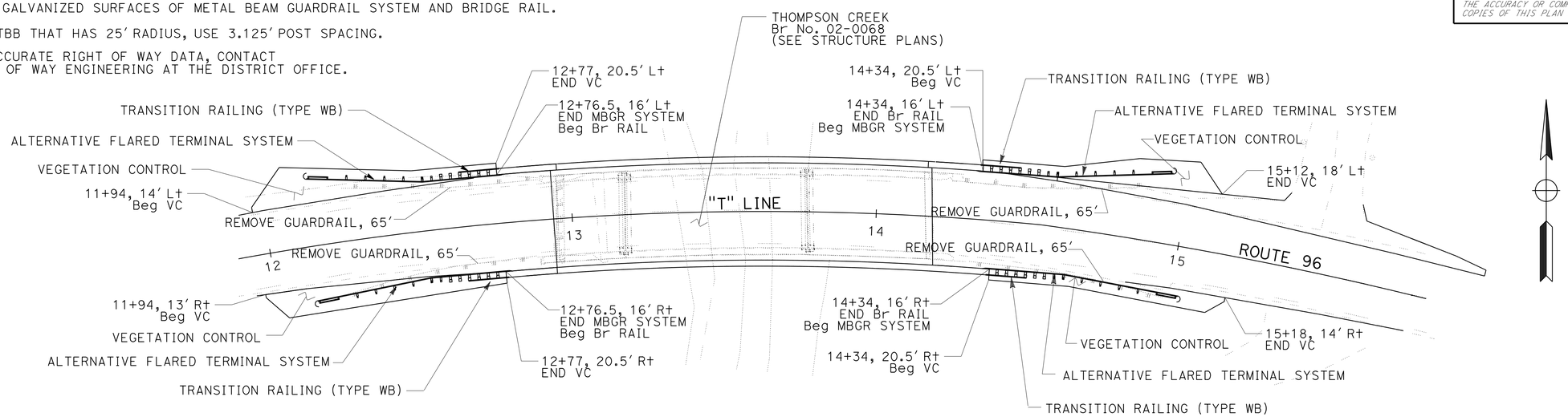

LOCATION 1 - THOMPSON CREEK

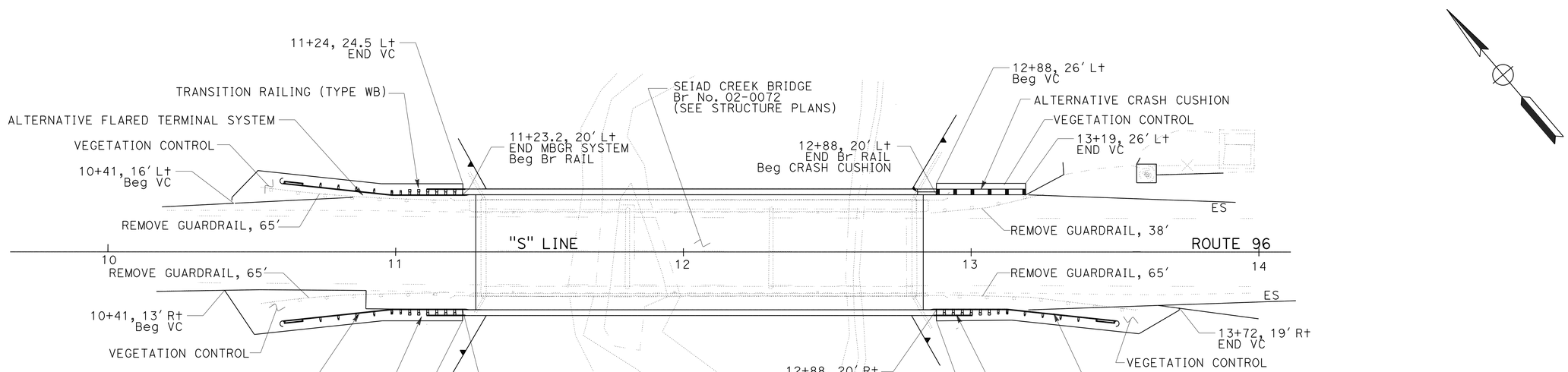

LOCATION 2 - SEIAD CREEK

CONSTRUCTION DETAILS GUARDRAIL SYSTEM AND VEGETATION CONTROL

NO SCALE

C-5

APPROVED FOR METAL BEAM GUARDRAIL SYSTEM WORK ONLY

REVISED BY | DATE REVISED
LORI EWENS | RUSSELL FLOOD
CALCULATED-DESIGNED BY | CHECKED BY
FUNCTIONAL SUPERVISOR: STEVE TOPAL

STATE OF CALIFORNIA - DEPARTMENT OF TRANSPORTATION
Caltrans® DESIGN

P:\proj1\02\4E650_plans\pse\24e650ga005.dgn

LAST REVISION | DATE PLOTTED => 22-AUG-2016 | TIME PLOTTED => 15:20

Dist	COUNTY	ROUTE	POST MILES TOTAL PROJECT	SHEET No.	TOTAL SHEETS
02	Sis	96	R52.5/88.4	16	210

Lori Ewens 06-12-16
REGISTERED CIVIL ENGINEER DATE

06-15-16
PLANS APPROVAL DATE

REGISTERED PROFESSIONAL ENGINEER
LORI EWENS
No. C43919
Exp. 6-30-17
CIVIL
STATE OF CALIFORNIA

THE STATE OF CALIFORNIA OR ITS OFFICERS OR AGENTS SHALL NOT BE RESPONSIBLE FOR THE ACCURACY OR COMPLETENESS OF SCANNED COPIES OF THIS PLAN SHEET.

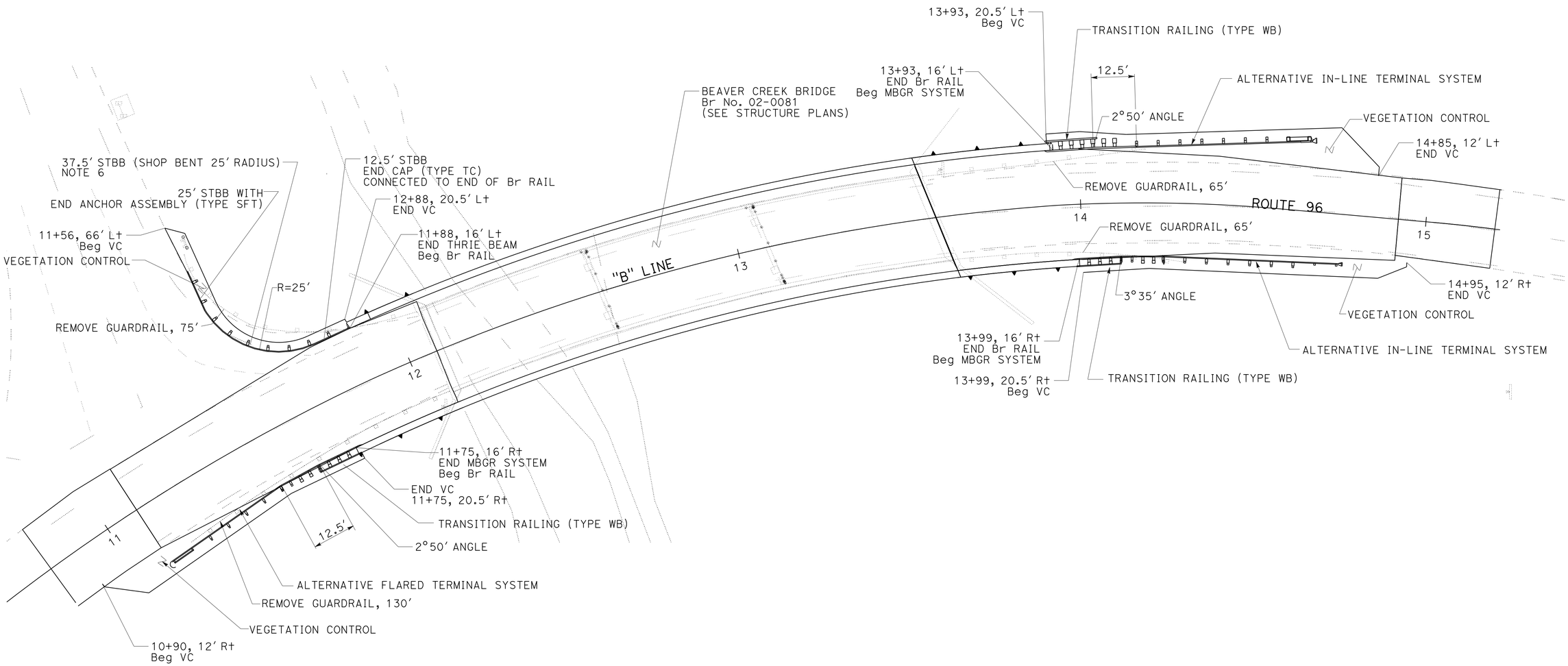

LOCATION 3 - BEAVER CREEK

CONSTRUCTION DETAILS GUARDRAIL SYSTEM SYSTEM AND VEGETATION CONTROL

NO SCALE

C-6

APPROVED FOR METAL BEAM GAURDRAIL SYSTEM WORK ONLY

STATE OF CALIFORNIA - DEPARTMENT OF TRANSPORTATION
Caltrans® DESIGN

FUNCTIONAL SUPERVISOR: STEVE TOPAL
CALCULATED-DESIGNED BY: LORI EWENS
CHECKED BY: RUSSELL FLOOD
REVISED BY
DATE REVISED

P:\proj1\02\4E650_plans\pse\24e650ga006.dgn

LAST REVISION
DATE PLOTTED => 22-AUG-2016
TIME PLOTTED => 15:20

Dist	COUNTY	ROUTE	POST MILES TOTAL PROJECT	SHEET No.	TOTAL SHEETS
02	Sis	96	R52.5/88.4	17	210

Lori Ewens 06-12-16
REGISTERED CIVIL ENGINEER DATE

06-15-16
PLANS APPROVAL DATE

REGISTERED PROFESSIONAL ENGINEER LORI EWENS No. C43919 Exp. 6-30-17 CIVIL STATE OF CALIFORNIA

THE STATE OF CALIFORNIA OR ITS OFFICERS OR AGENTS SHALL NOT BE RESPONSIBLE FOR THE ACCURACY OR COMPLETENESS OF SCANNED COPIES OF THIS PLAN SHEET.

NOTES:

1. WHEN THERE IS A GRADE BREAK POINT BETWEEN 4 TO 8′ IN FRONT OF GUARD RAILING, THE HEIGHT WILL BE DETERMINED BY THE ENGINEER.
2. EXACT LOCATIONS OF RUB RAIL ELEMENTS WILL BE DETERMINED BY THE ENGINEER. ATTACH TO POST WITH NO BLOCK.

LEGEND:

D DISTANCE
GB GRADE BREAK

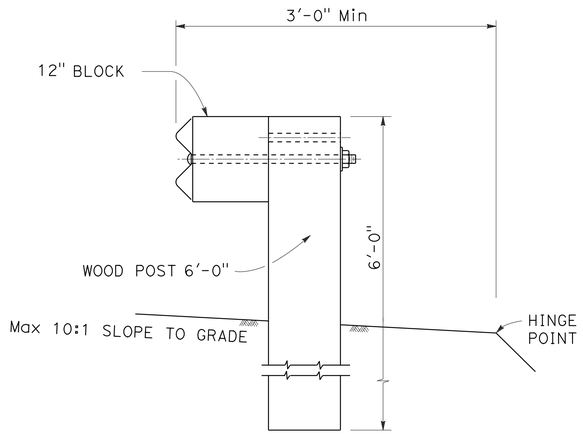

DETAIL A
TYPICAL ROADWAY INSTALLATION

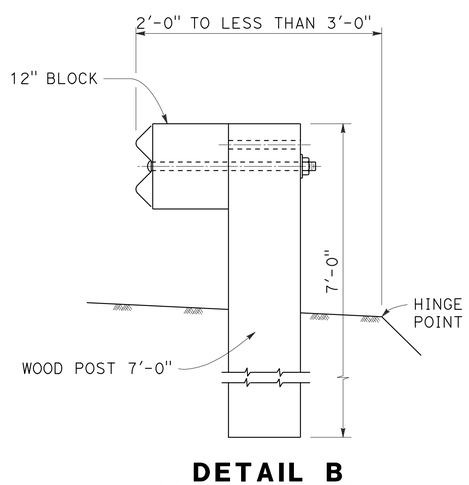

DETAIL B
NARROW ROADWAY INSTALLATION

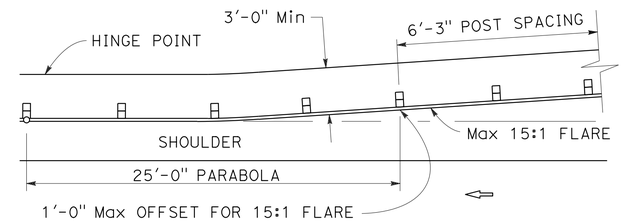

GUARD RAILING WITH FLARED ALIGNMENT

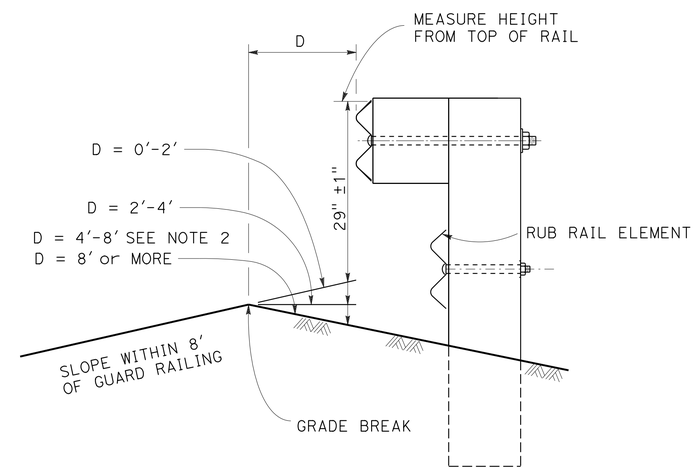

RUB RAIL DETAIL

WHEN THERE IS A BREAK POINT IN FRONT OF GUARD RAILING MEASURE HEIGHT OF GUARD RAIL BASED ON DISTANCE FROM GRADE BREAK.

POST EMBEDMENT

CONSTRUCTON DETAILS METAL BEAM GUARD RAILING TYPICAL LINE POST EMBEDMENT AND HINGE POINT OFFSET DETAILS

NO SCALE

C-7

REVISED BY | DATE REVISED
LORI EWENS | RUSSELL FLOOD
CALCULATED-DESIGNED BY | CHECKED BY
FUNCTIONAL SUPERVISOR | STEVE TOPAL
STATE OF CALIFORNIA - DEPARTMENT OF TRANSPORTATION
Caltrans® DESIGN
P:\proj1\02\4E650_plans\pse\24e650ga007.dgn

LAST REVISION | DATE PLOTTED => 22-AUG-2016 TIME PLOTTED => 15:20

Dist	COUNTY	ROUTE	POST MILES TOTAL PROJECT	SHEET No.	TOTAL SHEETS
02	Sis	96	R52.5/88.4	18	210

Lori Ewens 06-12-16
REGISTERED CIVIL ENGINEER DATE

06-15-16
PLANS APPROVAL DATE

REGISTERED PROFESSIONAL ENGINEER LORI EWENS No. C43919 Exp. 6-30-17 CIVIL STATE OF CALIFORNIA

THE STATE OF CALIFORNIA OR ITS OFFICERS OR AGENTS SHALL NOT BE RESPONSIBLE FOR THE ACCURACY OR COMPLETENESS OF SCANNED COPIES OF THIS PLAN SHEET.

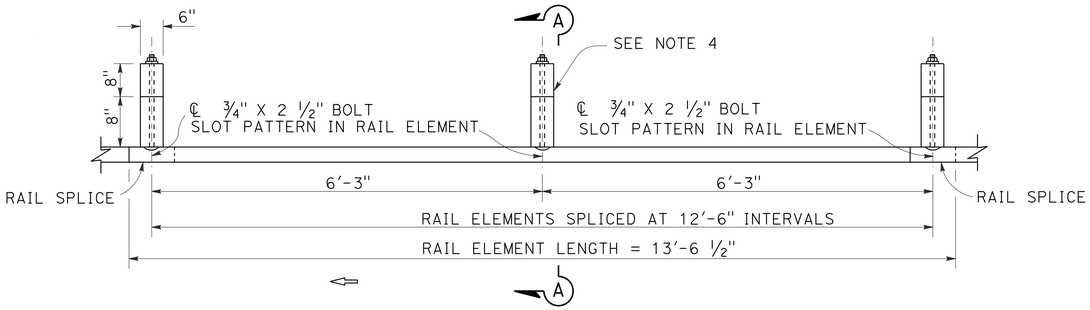

PLAN

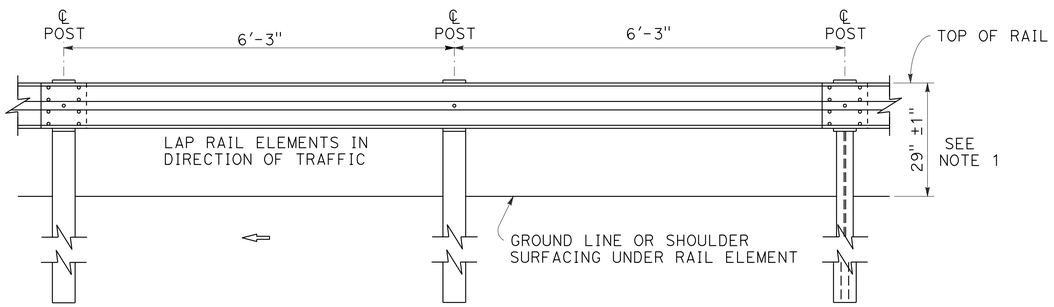

ELEVATION

METAL BEAM GUARD RAILING

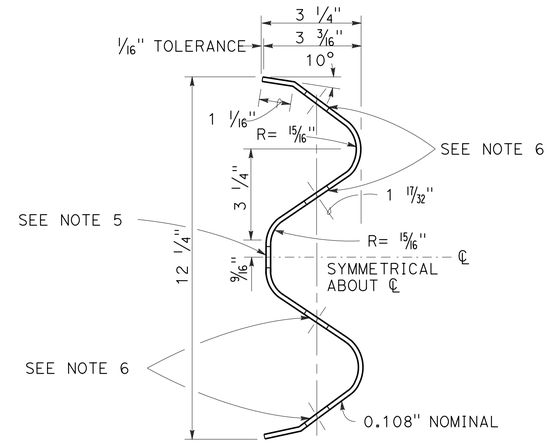

SECTION THRU RAIL ELEMENT

NOTES:

1. SEE RUB RAIL DETAIL.
2. FOR DETAILS OF STANDARD HARDWARE USED TO CONSTRUCT GUARD RAILING, SEE 2010 STANDARD PLANS SHEET RSP A77M1.
3. FOR DETAILS OF WOOD POST AND WOOD BLOCK USED TO CONSTRUCT GUARD RAILING, SEE 2010 STANDARD PLANS SHEET RSP A77N1.
4. A SINGLE LINE POST MAY BE OFFSET UP TO 12" IN LINE WITH THE GUARD RAILING.
5. DO NOT INSTALL POST THROUGH PAVEMENT.
6. SLOTTED HOLE FOR BOLTED CONNECTION OF RAIL ELEMENT TO BLOCK AND POST. SEE "RAIL ELEMENT SPLICE DETAIL".
7. SLOTTED HOLES FOR SPLICE BOLTS TO OVERLAP ENDS OF RAIL ELEMENT. SEE "RAIL ELEMENT SPLICE DETAIL".
8. ADDITIONAL HOLE IN UPPERMOST PORTION OF LINE POST IS FOR POTENTIAL FUTURE ADJUSTMENTS OF RAILING HEIGHT.
9. TO CONNECT RAILING TO TERMINAL SYSTEM END TREATMENT, TRANSITION THE TOP OF RAILING HEIGHT AT A RATIO OF 120:1 TO TERMINAL SYSTEM END TREATMENT HEIGHT PLUS ONE 12'-6" STANDARD RAILING SECTION AT THE TRANSITIONED HEIGHT FOR A HORIZONTAL CONNECTION TO THE END TREATMENT.

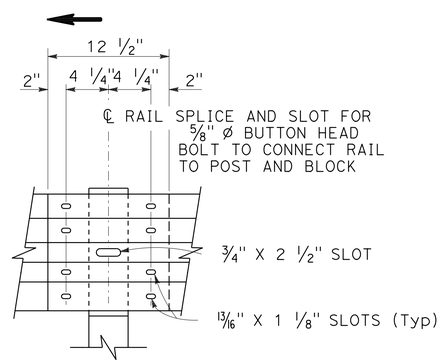

ELEVATION

RAIL ELEMENT SPLICE DETAIL

A. CONNECT THE OVER LAPPED END OF THE RAIL ELEMENTS WITH 5/8" ø X 1 3/8" BUTTON HEAD OVAL SHOULDER SPLICE BOLTS INSERTED INTO THE 13/16" X 1 1/8" SLOTS AND BOLTED TOGETHER WITH 5/8" ø RECESSED HEX NUTS. RECESS OF HEX NUT POINTS TOWARD RAIL ELEMENT. A TOTAL OF 8 BOLTS AND NUTS ARE TO BE USED AT EACH RAIL SPLICE CONNECTION.

B. THE ENDS OF THE RAIL ELEMENTS ARE TO BE OVERLAPPED IN THE DIRECTION OF TRAFFIC (SEE DETAILS).

C. WHERE END CAP IS TO BE ATTACHED TO THE END OF A RAIL ELEMENT, A TOTAL OF 4 OF THE ABOVE DESCRIBED SPLICE BOLTS AND NUTS ARE TO BE USED.

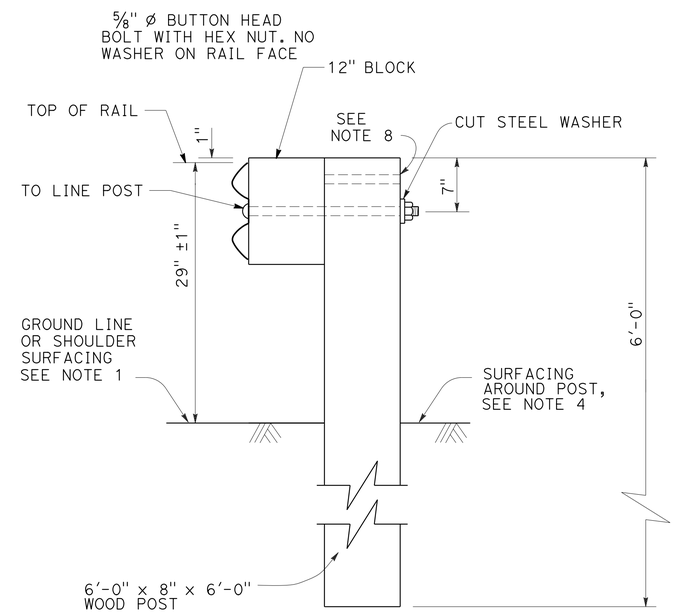

SECTION A-A

TYPICAL LINE POST INSTALLATION

SEE NOTE 4

CONSTRUCTION DETAILS GUARD RAILING STANDARD RAILING SECTION (WOOD POST WITH WOOD BLOCK)

NO SCALE

C-8

REVISED BY | DATE REVISED
LORI EWENS | RUSSELL FLOOD
CALCULATED-DESIGNED BY | CHECKED BY
FUNCTIONAL SUPERVISOR | STEVE TOPAL

STATE OF CALIFORNIA - DEPARTMENT OF TRANSPORTATION
Caltrans® DESIGN

P:\proj1\02\4E650_plans\pse\24e650ga008.dgn

LAST REVISION | DATE PLOTTED => 22-AUG-2016 | TIME PLOTTED => 15:20

Dist	COUNTY	ROUTE	POST MILES TOTAL PROJECT	SHEET No.	TOTAL SHEETS
02	Sis	96	R52.5/88.4	19	210

Lori Ewens 06-12-16
REGISTERED CIVIL ENGINEER DATE

06-15-16
PLANS APPROVAL DATE

REGISTERED PROFESSIONAL ENGINEER LORI EWENS No. C43919 Exp. 6-30-17 CIVIL STATE OF CALIFORNIA

THE STATE OF CALIFORNIA OR ITS OFFICERS OR AGENTS SHALL NOT BE RESPONSIBLE FOR THE ACCURACY OR COMPLETENESS OF SCANNED COPIES OF THIS PLAN SHEET.

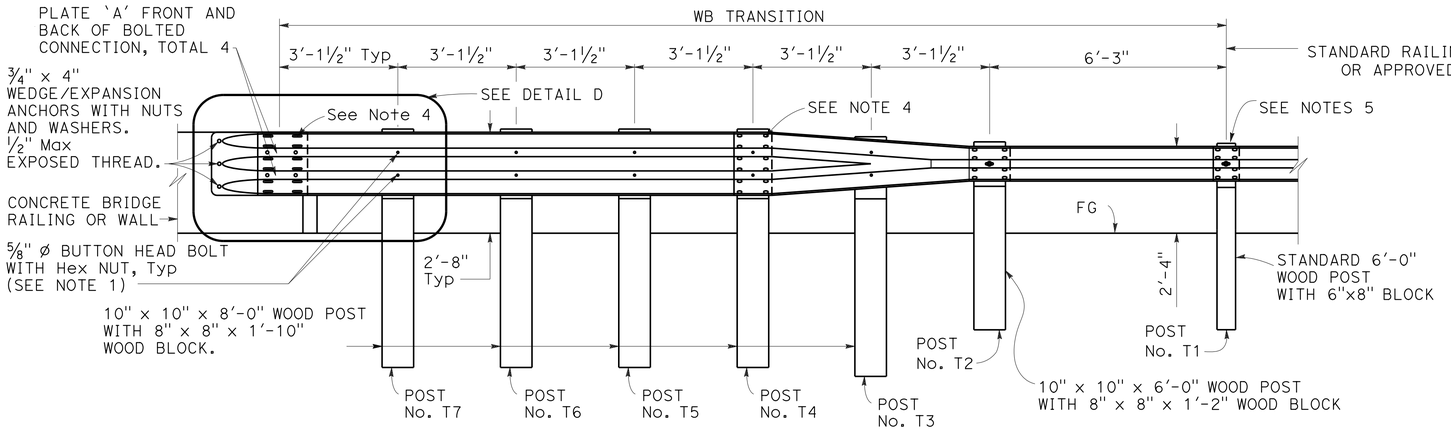

ELEVATION

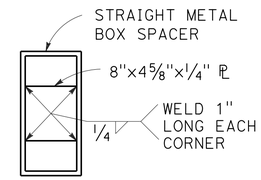

DETAIL B

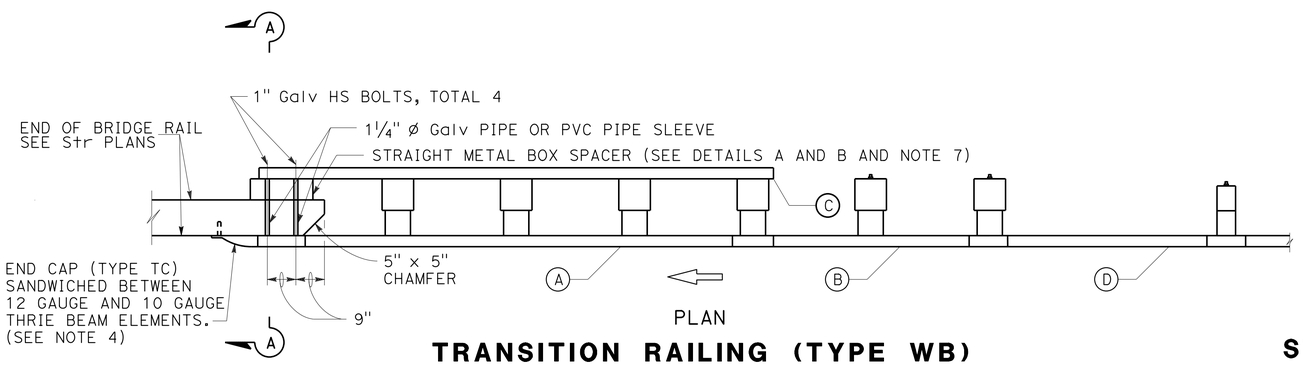

PLAN

TRANSITION RAILING (TYPE WB)

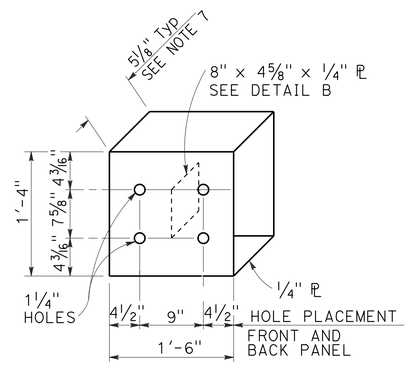

DETAIL A

STRAIGHT METAL BOX SPACER

NOTES:

1. STRUCTURE APPROACH END SHOWN. STRUCTURE DEPARTURE END SIMILAR.
2. USE ⅝" ø BUTTON HEAD BOLTS AND HEX NUTS FOR CONNECTIONS TO 10" x 10" WOOD POSTS. NO WASHER ON RAIL FACE FOR BOLTED CONNECTIONS TO POST.
3. THE NESTED RAIL ELEMENTS, END CAP, AND 'W' BEAM TO THRIE BEAM ELEMENT MAY BE SPLICED TOGETHER PRIOR TO BOLTING THE ELEMENTS TO THE WOOD POST AND CONCRETE BARRIER OR RAILING.
4. EXTERIOR SPLICE BOLT HOLES FOR RAIL ELEMENT SPLICES AT POST NO. T4 AND THE CONNECTION TO THE CONCRETE BARRIER OR RAILING SHALL BE THE STANDARD 13/16" X 1 ⅛" SLOT SIZE. INTERIOR SPLICE BOLT HOLES AT THESE LOCATIONS MAY BE INCREASED UP TO 1 ¼" ø. ONLY THE TOP 4 AND THE BOTTOM 4 SPLICE BOLTS WITH WASHERS AND NUTS ARE REQUIRED FOR RAIL SPLICES AT POST NO. T4 AND THE CONNECTION TO THE CONCRETE BARRIER OR RAILING.
5. THE TOP ELEVATION OF POSTS NO. T2 THROUGH NO. T7 SHALL NOT PROJECT MORE THAN 1" ABOVE THE TOP ELEVATION OF THE RAIL ELEMENT.
6. THE GUARD RAILING CONNECTED TO TRANSITION RAILING (TYPE WB) WILL BE EITHER STANDARD RAILING SECTION OF METAL BEAM GUARD RAILING WITH HEIGHT TRANSITION RATIO OF 120:1 OR AN APPROVED CALTRANS END TREATMENT ATTACHED TO POST NO. T1.
7. THE DEPTH OF THE METAL BOX SPACER VARIES FROM THE 5 ⅛" TO 1 ½" AND IS DEPENDENT ON THE WIDTH OF THE CONCRETE RAILING OR WALL. THE COMBINED DIMENSION FOR THE DEPTH OF THE METAL BOX SPACER PLUS THE WIDTH OF RAILING OR WALL SHOULD BE 17 ⅛".

LEGEND

(A) NESTED THRIE BEAM ELEMENTS (ONE 12 GAUGE ELEMENT NESTED OVER ONE 10 GAUGE ELEMENT).

(B) ONE 10 GAUGE "W" BEAM TO THRIE BEAM ELEMENT.

(C) ONE 12 GAUGE THRIE BEAM ELEMENT.

(D) ONE 10 GAUGE "W" BEAM RAIL ELEMENT (7'-3½" LENGTH)

10 GAUGE = 0.138" THICK

12 GAUGE = 0.108" THICK

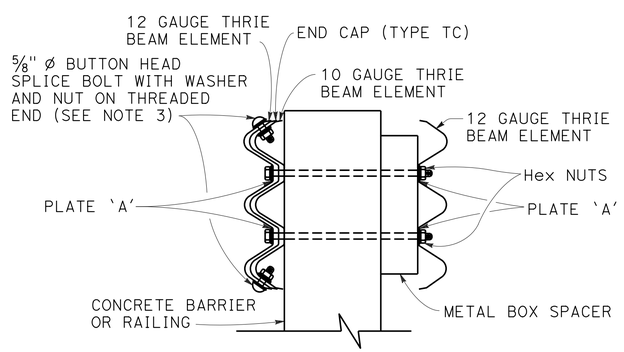

SECTION A-A

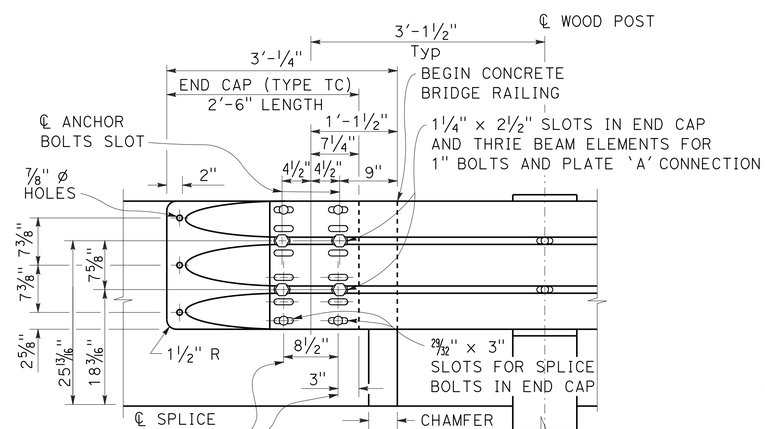

DETAIL D

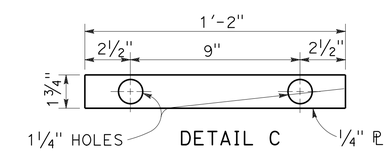

DETAIL C

PLATE 'A'

CONSTRUCTION DETAILS GUARD RAILING TRANSITION (TYPE WB)

NO SCALE

C-9

STATE OF CALIFORNIA - DEPARTMENT OF TRANSPORTATION
Caltrans DESIGN

FUNCTIONAL SUPERVISOR: STEVE TOPAL
CALCULATED-DESIGNED BY: LORI EWENS
CHECKED BY: RUSSELL FLOOD
REVISED BY / DATE REVISED

P:\proj1\02\4E650_plans\pse\24e650ga009.dgn

LAST REVISION DATE PLOTTED => 22-AUG-2016
TIME PLOTTED => 15:20

Dist	COUNTY	ROUTE	POST MILES TOTAL PROJECT	SHEET No.	TOTAL SHEETS
02	Sis	96	R52.5/88.4	20	210

Lori Ewens 06-12-16
REGISTERED CIVIL ENGINEER DATE

06-15-16
PLANS APPROVAL DATE

REGISTERED PROFESSIONAL ENGINEER LORI EWENS No. C43919 Exp. 6-30-17 CIVIL STATE OF CALIFORNIA

THE STATE OF CALIFORNIA OR ITS OFFICERS OR AGENTS SHALL NOT BE RESPONSIBLE FOR THE ACCURACY OR COMPLETENESS OF SCANNED COPIES OF THIS PLAN SHEET.

NOTES:

1. PROTECT EXISTING RSP IN PLACE TO THE EXTENT FEASIBLE.
2. FOR ACCURATE RIGHT OF WAY DATA, CONTACT RIGHT OF WAY ENGINEERING AT THE DISTRICT OFFICE.
3. ORDINARY HIGH WATER MARK AT ELEVATION 1243'.

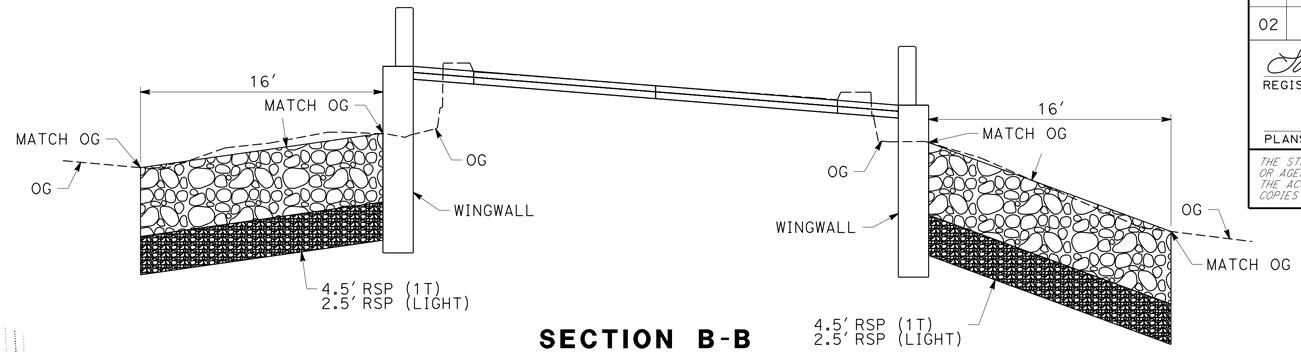

SECTION B-B
TYPICAL BOTH ABUTMENTS
NO SCALE

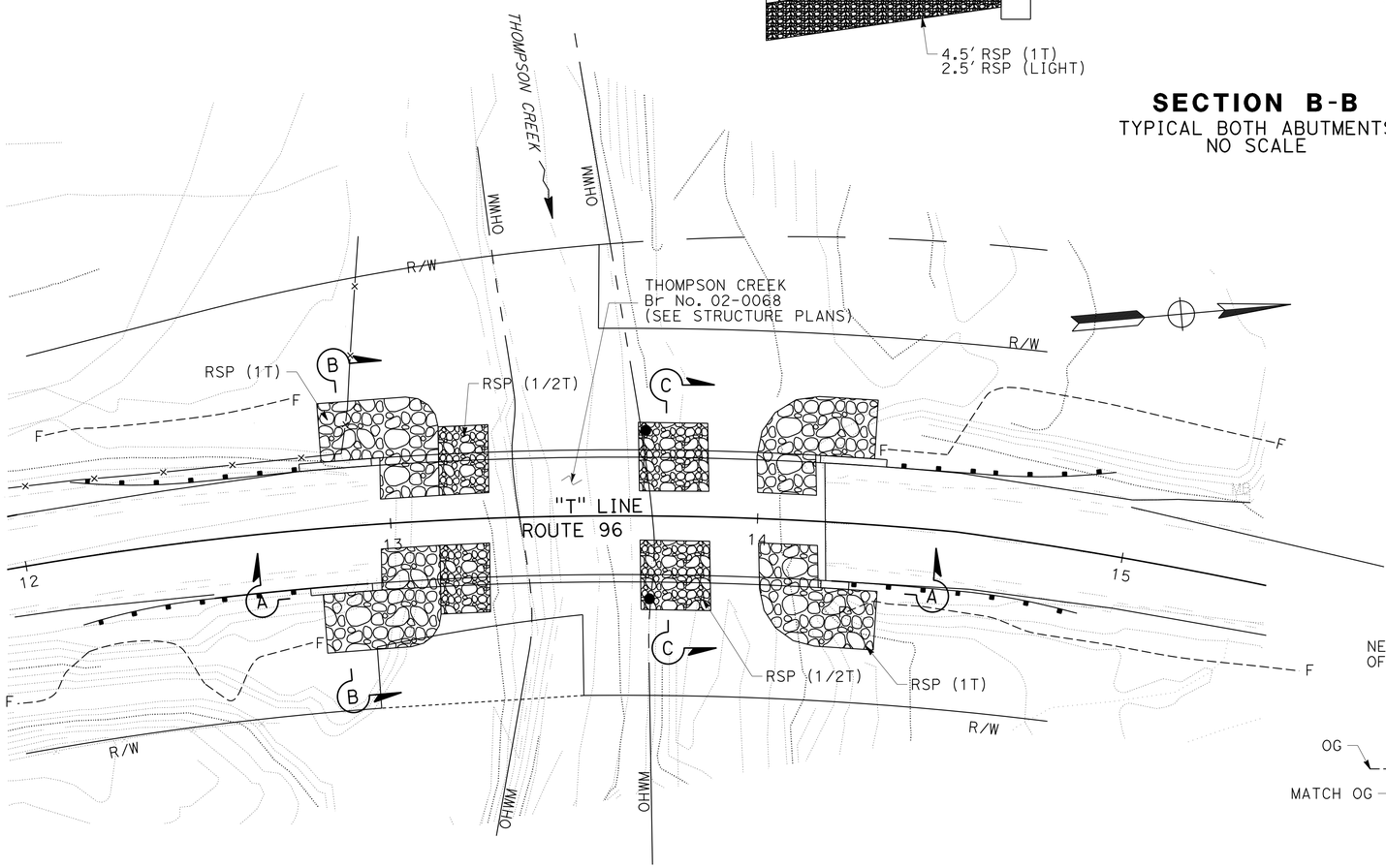

PLAN

ABBREVIATIONS:

RSP (1T)	ROCK SLOPE PROTECTION (1T, WITH VOID FILLER)
RSP (1/2 T)	ROCK SLOPE PROTECTION (1/2 T, WITH VOID FILLER)
RSP (1/4 T)	ROCK SLOPE PROTECTION (1/4 T, WITH VIOD FILLER)
OHWM	ORDINARARY HIGH WATER MARK

LEGEND:

● PLANTING TUBE (SEE DETAIL ON SHEET C-10)

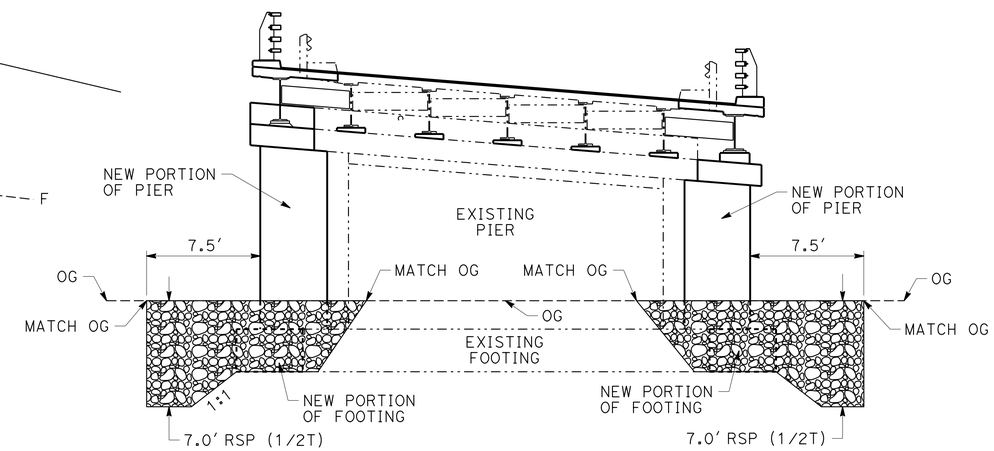

SECTION C-C
TYPICAL BOTH PIERS

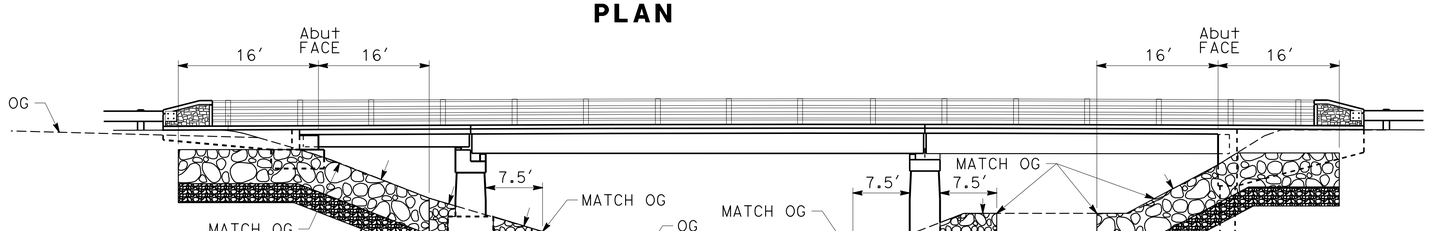

SECTION A-A

APPROVED FOR RSP WORK ONLY

LOCATION 1
THOMPSON CREEK

CONSTRUCTION DETAILS
ROCK SLOPE PROTECTION

NO SCALE

C-10

REVISED BY | DATE REVISED
BRETT DITZLER | LORI EWENS
CALCULATED-DESIGNED BY | CHECKED BY
FUNCTIONAL SUPERVISOR | STEVE TOPAL
STATE OF CALIFORNIA - DEPARTMENT OF TRANSPORTATION
Caltrans
DESIGN
P:\proj\02\4E650_plans\pse\24e650ga010.dgn

LAST REVISION | DATE PLOTTED => 22-AUG-2016 | TIME PLOTTED => 15:20

Dist	COUNTY	ROUTE	POST MILES TOTAL PROJECT	SHEET No.	TOTAL SHEETS
02	Sis	96	R52.5/88.4	21	210

Lori Ewens 06-12-16
REGISTERED CIVIL ENGINEER DATE

06-15-16
PLANS APPROVAL DATE

REGISTERED PROFESSIONAL ENGINEER LORI EWENS No. C43919 Exp. 6-30-17 CIVIL STATE OF CALIFORNIA

THE STATE OF CALIFORNIA OR ITS OFFICERS OR AGENTS SHALL NOT BE RESPONSIBLE FOR THE ACCURACY OR COMPLETENESS OF SCANNED COPIES OF THIS PLAN SHEET.

NOTE:

1. FOR ACCURATE RIGHT OF WAY DATA, CONTACT RIGHT OF WAY ENGINEERING AT THE DISTRICT OFFICE.
2. ORDINARY HIGH WATER MARK ELEVATION 1362'.

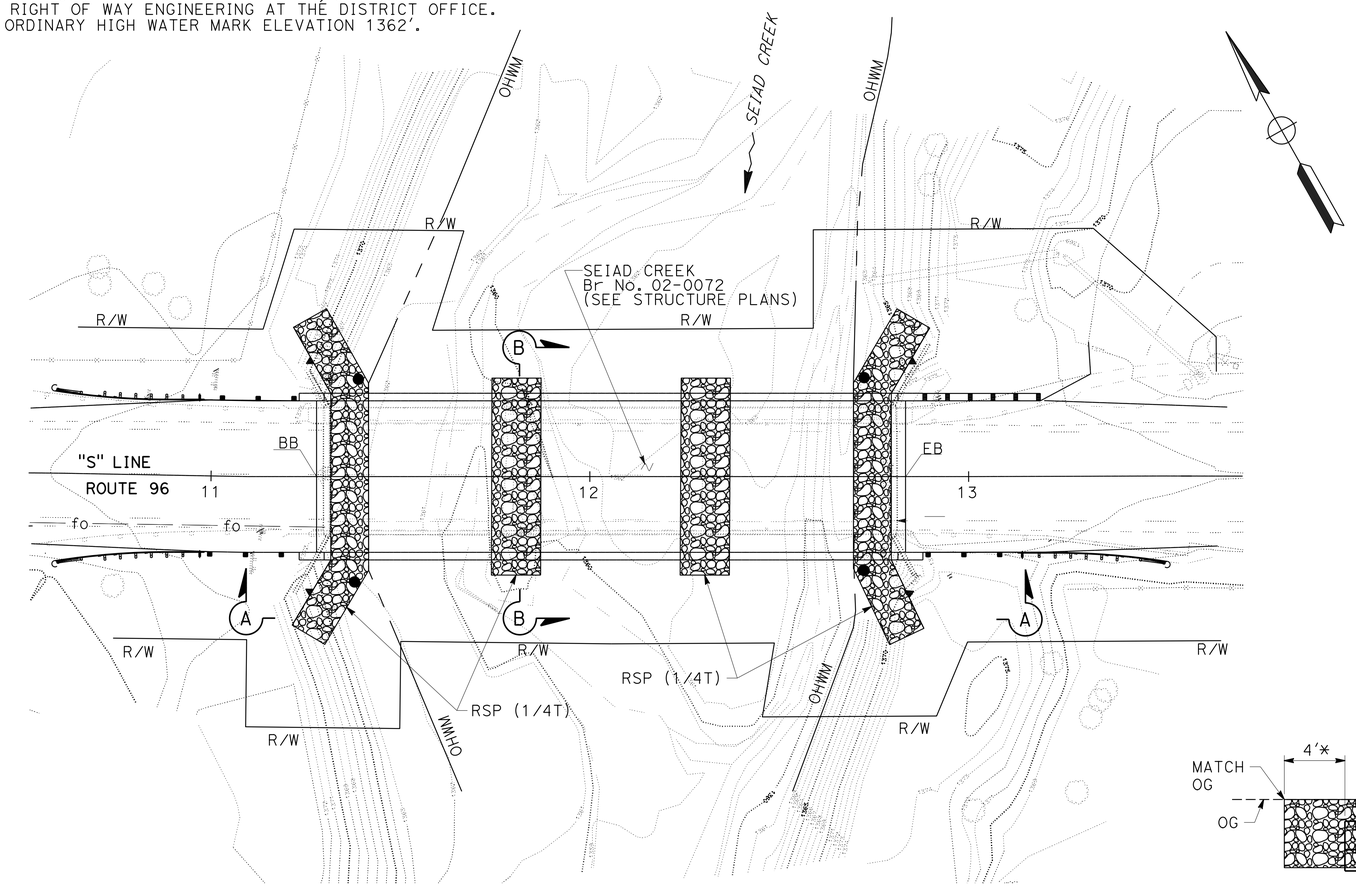

PLAN

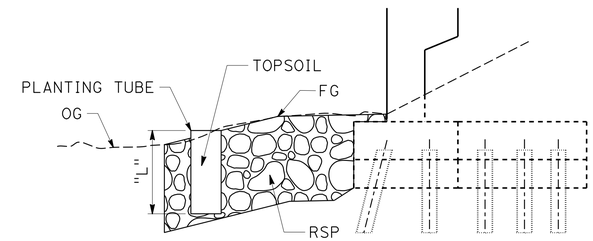

PLANTING TUBE DETAIL

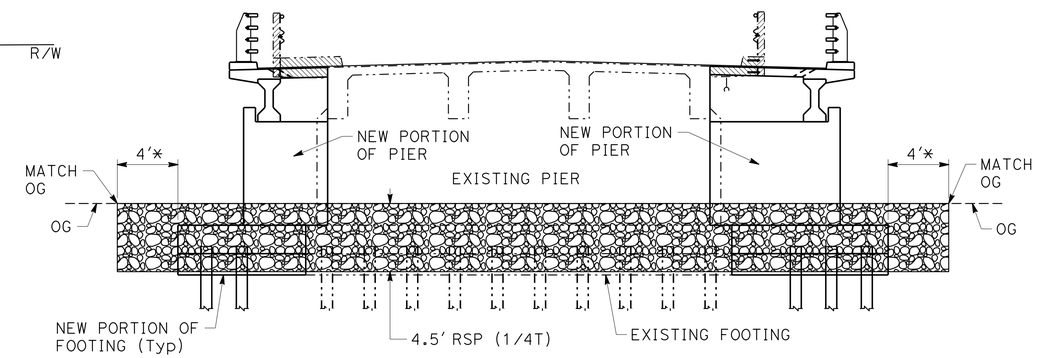

* MEASURED FROM END OF NEW FOOTING

SECTION B-B

TYPICAL BOTH PIERS

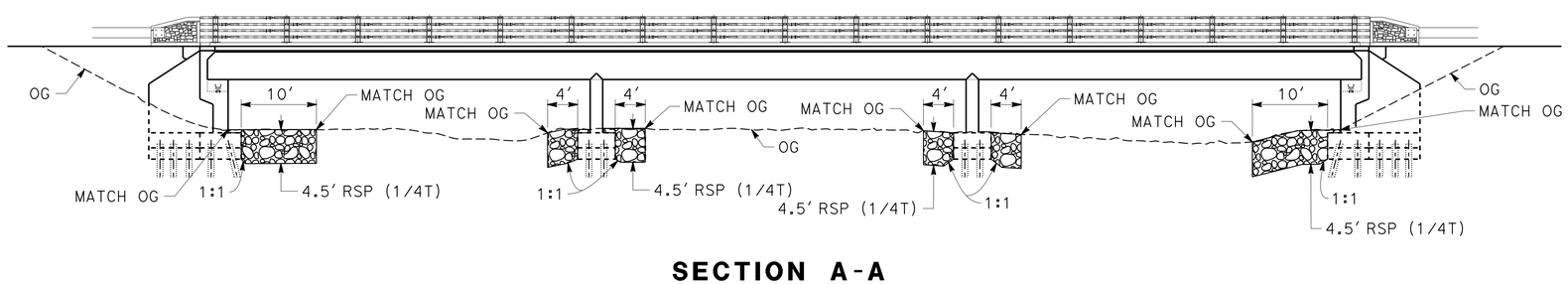

SECTION A-A

APPROVED FOR RSP WORK ONLY

LOCATION 2 - SEIAD CREEK

CONSTRUCTION DETAILS ROCK SLOPE PROTECTION

NO SCALE

C-11

REVISED BY	DATE REVISED

CALCULATED-DESIGNED BY	CHECKED BY
BRETT DITZLER	LORI EWENS

FUNCTIONAL SUPERVISOR: STEVE TOPAL

STATE OF CALIFORNIA - DEPARTMENT OF TRANSPORTATION

Caltrans® **DESIGN**

P:\proj1\02\4E650_plans\pse\24e650ga011.dgn

DATE PLOTTED => 22-AUG-2016
TIME PLOTTED => 15:20

LAST REVISION

Dist	COUNTY	ROUTE	POST MILES TOTAL PROJECT	SHEET No.	TOTAL SHEETS
02	Sis	96	R52.5/88.4	22	210

Lori Ewens 06-12-16
REGISTERED CIVIL ENGINEER DATE

06-15-16
PLANS APPROVAL DATE

REGISTERED PROFESSIONAL ENGINEER LORI EWENS No. C43919 Exp. 6-30-17 CIVIL STATE OF CALIFORNIA

THE STATE OF CALIFORNIA OR ITS OFFICERS OR AGENTS SHALL NOT BE RESPONSIBLE FOR THE ACCURACY OR COMPLETENESS OF SCANNED COPIES OF THIS PLAN SHEET.

NOTE:

1. FOR ACCURATE RIGHT OF WAY DATA, CONTACT RIGHT OF WAY ENGINEERING AT THE DISTRICT OFFICE.
2. ORDINARY HIGH WATER MARK AT 1372'.

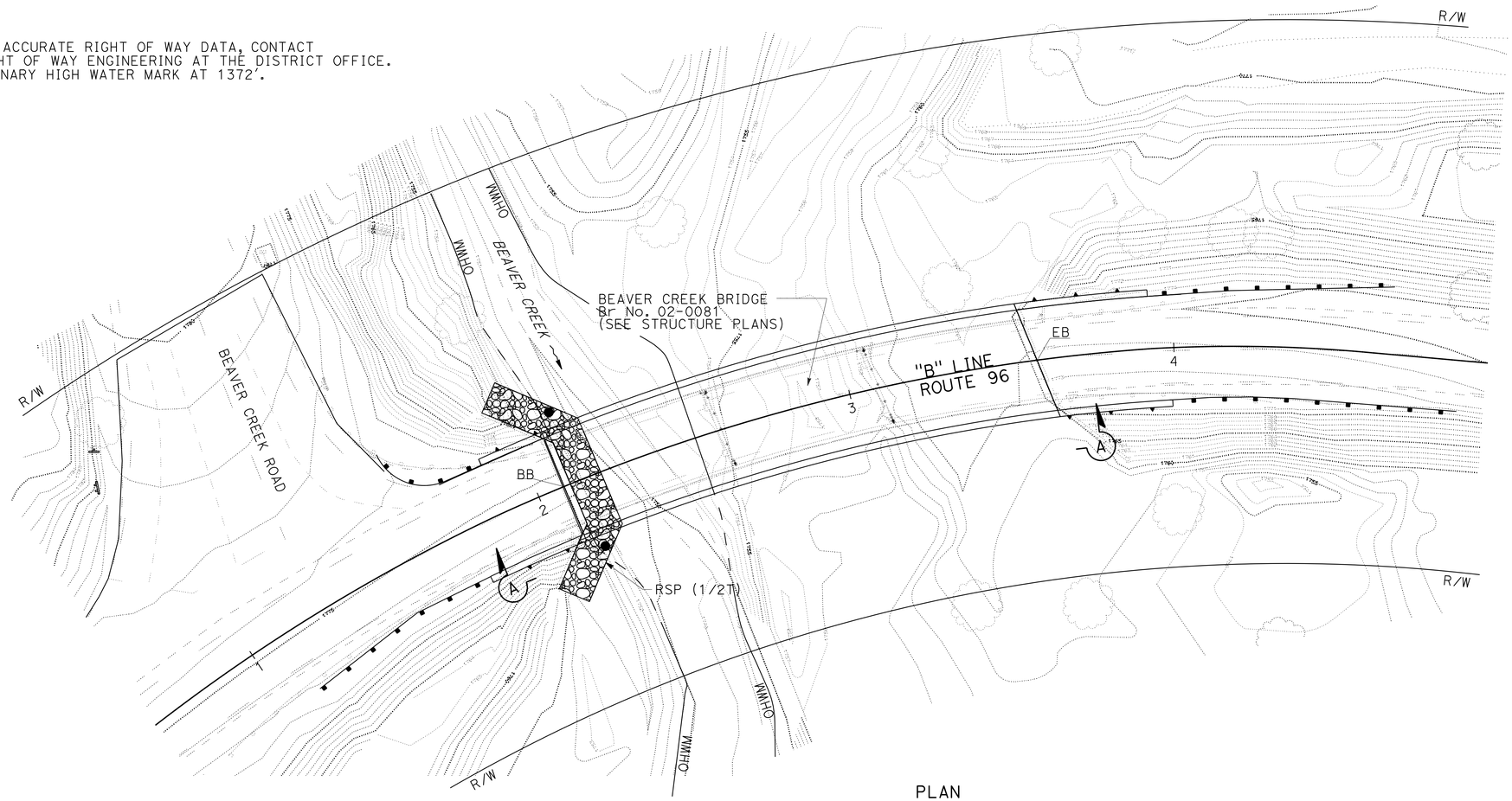

PLAN

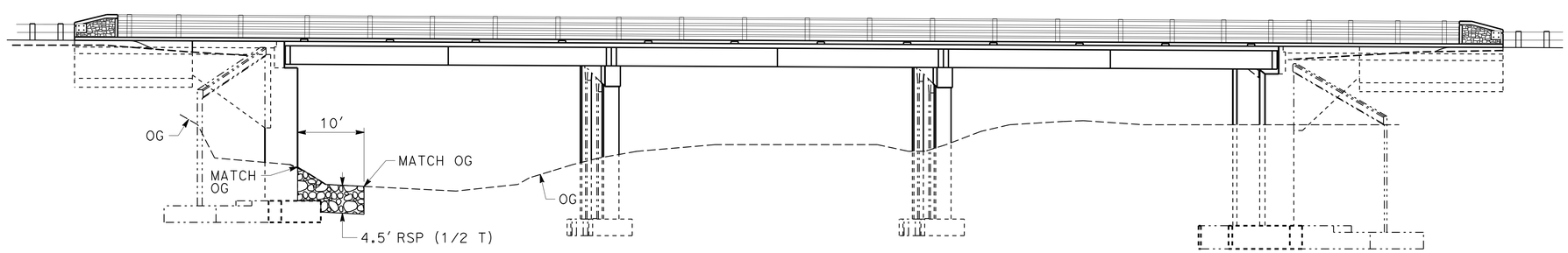

SECTION A-A

APPROVED FOR RSP WORK ONLY

LOCATION 3 - BEAVER CREEK

CONSTRUCTION DETAILS
ROCK SLOPE PROTECTION

NO SCALE

C-12

STATE OF CALIFORNIA - DEPARTMENT OF TRANSPORTATION
Caltrans® **DESIGN**

FUNCTIONAL SUPERVISOR: STEVE TOPAL
CALCULATED-DESIGNED BY: BRETT DITZLER
CHECKED BY: LORI EWENS
REVISED BY
DATE REVISED

P:\proj1\02\4E650_plans\pse\24e650ga012.dgn

LAST REVISION DATE PLOTTED => 22-AUG-2016
TIME PLOTTED => 15:20

Dist	COUNTY	ROUTE	POST MILES TOTAL PROJECT	SHEET No.	TOTAL SHEETS
02	Sis	96	R52.5/88.4	23	210

Lori Ewens 06-12-16
REGISTERED CIVIL ENGINEER DATE

06-15-16
PLANS APPROVAL DATE

REGISTERED PROFESSIONAL ENGINEER
LORI EWENS
No. C43919
Exp. 6-30-17
CIVIL
STATE OF CALIFORNIA

THE STATE OF CALIFORNIA OR ITS OFFICERS OR AGENTS SHALL NOT BE RESPONSIBLE FOR THE ACCURACY OR COMPLETENESS OF SCANNED COPIES OF THIS PLAN SHEET.

NOTES:

1. FOR ACCURATE RIGHT OF WAY DATA, CONTACT RIGHT OF WAY ENGINEERING AT THE DISTRICT OFFICE.
2. ORDINARY HIGH WATER MARK AT ELEVATION 1243'.

LEGEND:

OHWM — ORDINARY HIGH WATER MARK

X — ROADSIDE CLEARING (TREE REMOVAL)

TFESA PLACED AROUND DRIP LINE OF TREE

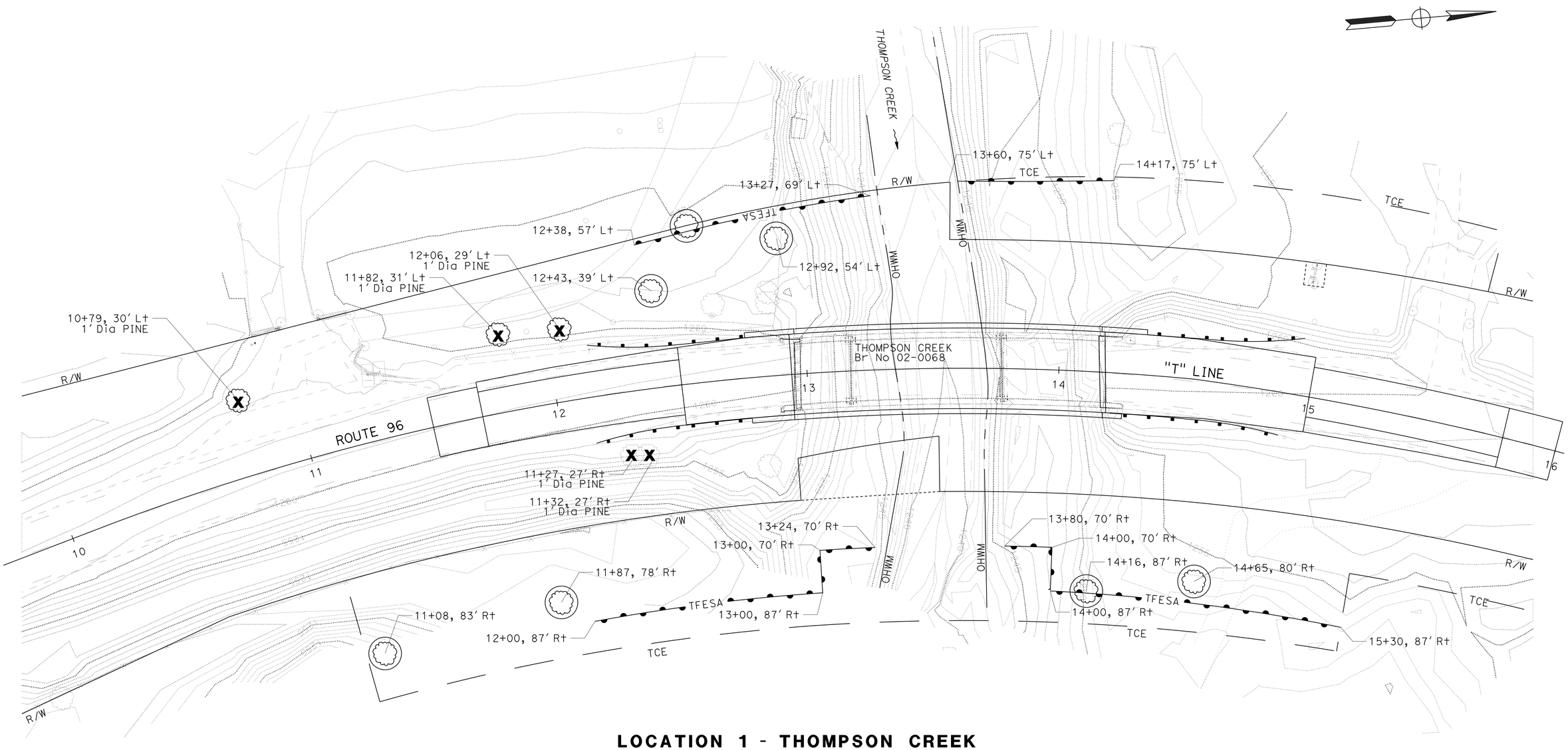

LOCATION 1 - THOMPSON CREEK

CONSTRUCTION DETAILS
ORDINARY HIGH WATER MARK AND TEMPORARY FENCE FOR ESA

SCALE: 1" = 20'

C-13

STATE OF CALIFORNIA - DEPARTMENT OF TRANSPORTATION
Caltrans
DESIGN

FUNCTIONAL SUPERVISOR: STEVE TOPAL
CALCULATED-DESIGNED BY: LORI EWENS
CHECKED BY: RUSSELL FLOOD
REVISED BY
DATE REVISED

P:\proj1\02\4E650_plans\pse\24e650ga013.dgn

LAST REVISION
DATE PLOTTED => 22-AUG-2016
TIME PLOTTED => 15:20

Dist	COUNTY	ROUTE	POST MILES TOTAL PROJECT	SHEET No.	TOTAL SHEETS
02	Sis	96	R52.5/88.4	24	210

Lori Ewens 06-12-16
REGISTERED CIVIL ENGINEER DATE

06-15-16
PLANS APPROVAL DATE

REGISTERED PROFESSIONAL ENGINEER
LORI EWENS
No. C43919
Exp. 6-30-17
CIVIL
STATE OF CALIFORNIA

THE STATE OF CALIFORNIA OR ITS OFFICERS OR AGENTS SHALL NOT BE RESPONSIBLE FOR THE ACCURACY OR COMPLETENESS OF SCANNED COPIES OF THIS PLAN SHEET.

NOTES:

1. FOR ACCURATE RIGHT OF WAY DATA, CONTACT RIGHT OF WAY ENGINEERING AT THE DISTRICT OFFICE.
2. ORDINARY HIGH WATER MARK AT ELEVATION 1362′.

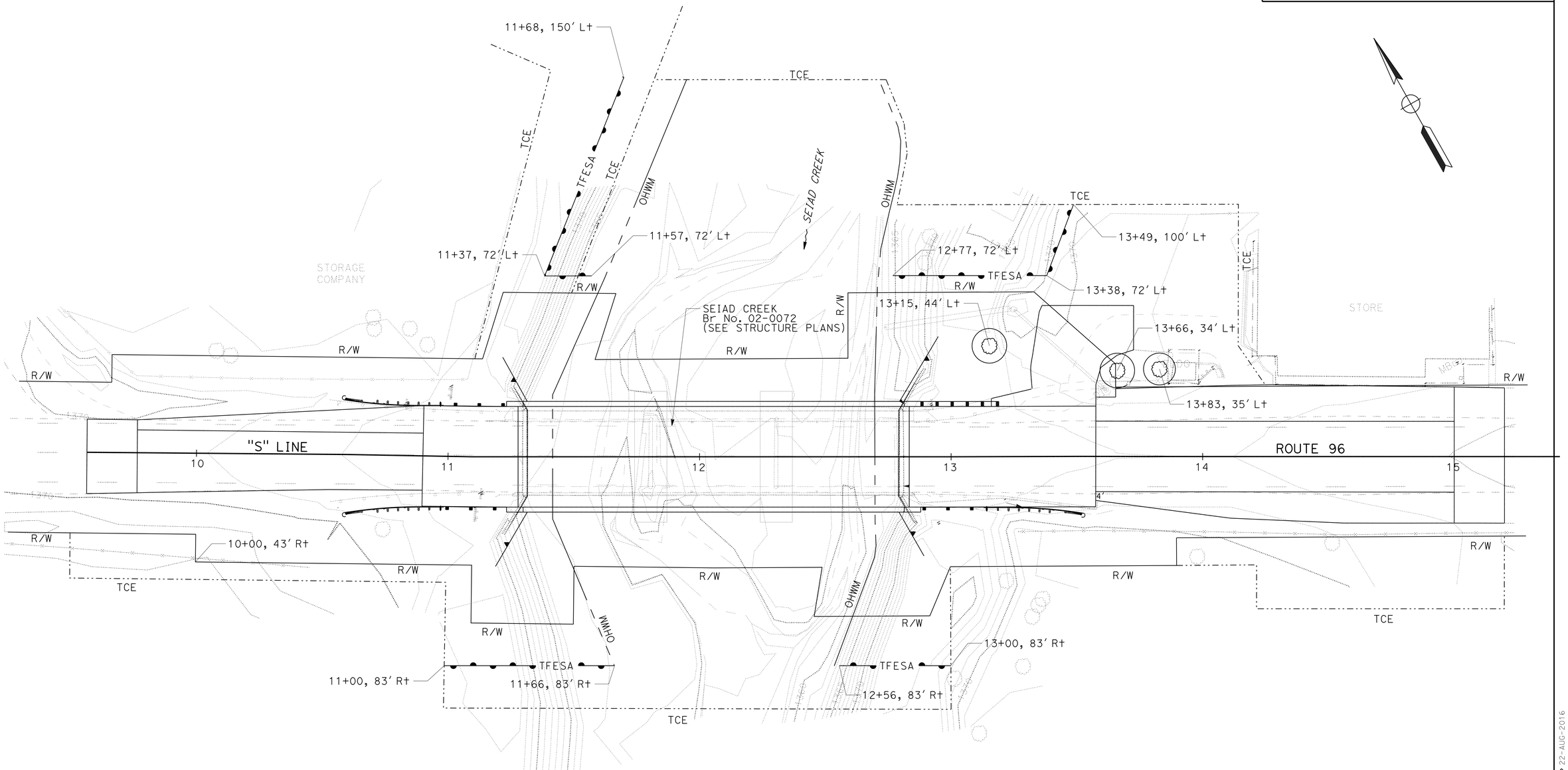

LOCATION 2 - SEIAD CREEK

CONSTRUCTION DETAILS
ORDINARY HIGH WATER MARK AND TEMPORARY FENCE FOR ESA

SCALE: 1" = 20′

C-14

REVISED BY | DATE REVISED
LORI EWENS | RUSSELL FLOOD
CALCULATED-DESIGNED BY | CHECKED BY
FUNCTIONAL SUPERVISOR: STEVE TOPAL
STATE OF CALIFORNIA - DEPARTMENT OF TRANSPORTATION
Caltrans® DESIGN

P:\proj1\02\4E650_plans\pse\24e650ga014.dgn

LAST REVISION | DATE PLOTTED => 22-AUG-2016 | TIME PLOTTED => 15:21

Dist	COUNTY	ROUTE	POST MILES TOTAL PROJECT	SHEET No.	TOTAL SHEETS
02	Sis	96	R52.5/88.4	25	210

Lori Ewens 06-12-16
REGISTERED CIVIL ENGINEER DATE

06-15-16
PLANS APPROVAL DATE

REGISTERED PROFESSIONAL ENGINEER
LORI EWENS
No. C43919
Exp. 6-30-17
CIVIL
STATE OF CALIFORNIA

THE STATE OF CALIFORNIA OR ITS OFFICERS OR AGENTS SHALL NOT BE RESPONSIBLE FOR THE ACCURACY OR COMPLETENESS OF SCANNED COPIES OF THIS PLAN SHEET.

NOTES:

1. FOR ACCURATE RIGHT OF WAY DATA, CONTACT RIGHT OF WAY ENGINEERING AT THE DISTRICT OFFICE.
2. ORDINARY HIGH WATER MARK AT ELEVATION 1372'.

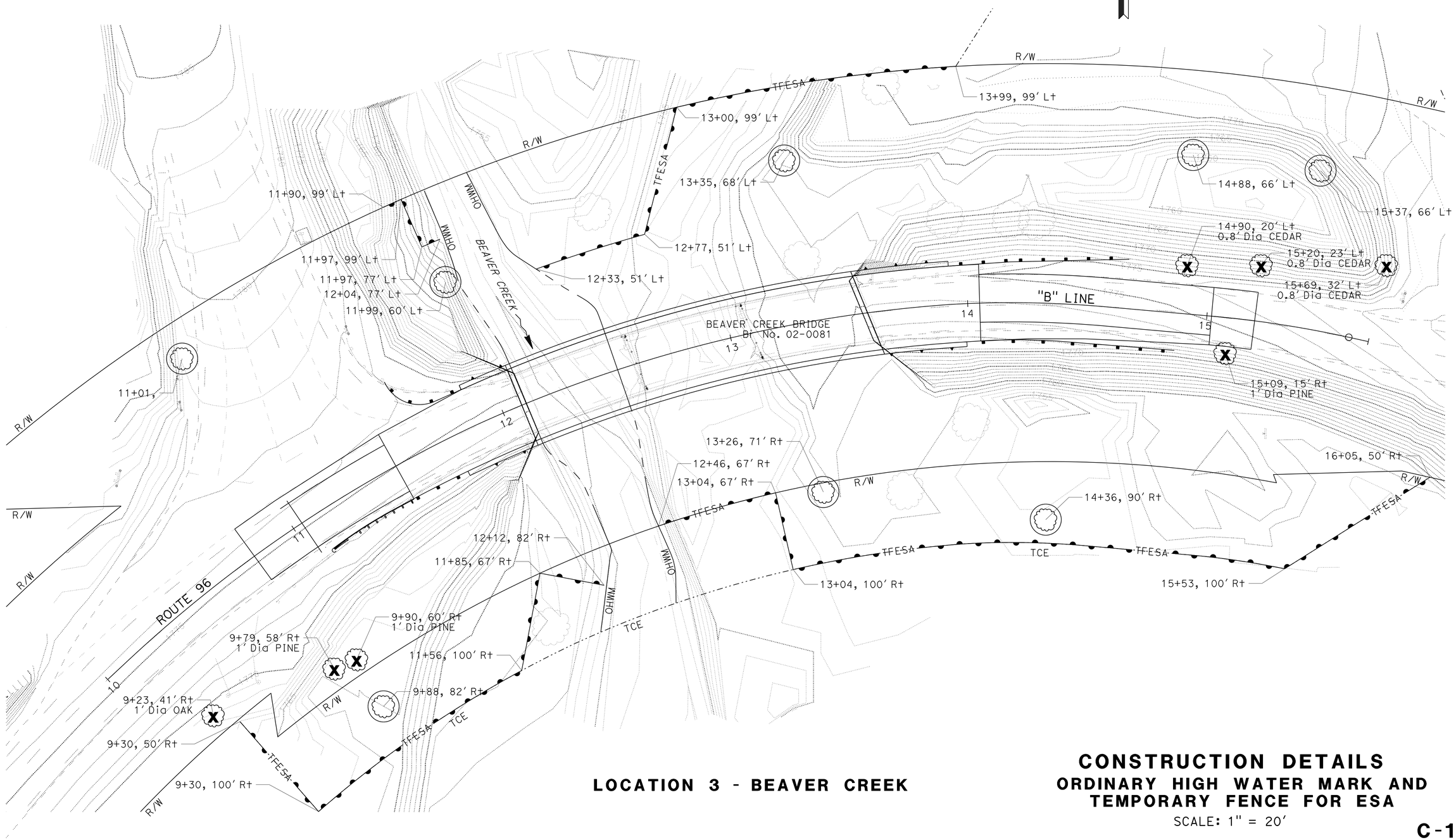

LOCATION 3 - BEAVER CREEK

CONSTRUCTION DETAILS

ORDINARY HIGH WATER MARK AND TEMPORARY FENCE FOR ESA

SCALE: 1" = 20'

C-15

STATE OF CALIFORNIA - DEPARTMENT OF TRANSPORTATION
Caltrans
DESIGN

FUNCTIONAL SUPERVISOR: STEVE TOPAL
CALCULATED-DESIGNED BY: LORI EWENS
CHECKED BY: RUSSELL FLOOD
REVISED BY
DATE REVISED

P:\proj\02\4E650_plans\pse\24e650ga015.dgn

LAST REVISION
DATE PLOTTED => 22-AUG-2016
TIME PLOTTED => 15:21

Dist	COUNTY	ROUTE	POST MILES TOTAL PROJECT	SHEET No.	TOTAL SHEETS
02	Sis	96	R52.5/88.4	26	210

Lori Ewens 06-12-16
REGISTERED CIVIL ENGINEER DATE

06-15-16
PLANS APPROVAL DATE

REGISTERED PROFESSIONAL ENGINEER
LORI EWENS
No. C43919
Exp. 6-30-17
CIVIL
STATE OF CALIFORNIA

THE STATE OF CALIFORNIA OR ITS OFFICERS OR AGENTS SHALL NOT BE RESPONSIBLE FOR THE ACCURACY OR COMPLETENESS OF SCANNED COPIES OF THIS PLAN SHEET.

NOTES:

1. FOR ACCURATE RIGHT OF WAY DATA, CONTACT RIGHT OF WAY ENGINEERING AT THE DISTRICT OFFICE.
2. SEE ELSEWHERE ON CONSTRUCTION DETAILS FOR ESA FENSE LOCATIONS.
3. SEE LAYOUTS FOR ADDITIONAL STATIONS AND OFFSETS TO RIGHT OF WAY
4. OTHER THAN STAGING AREA, TCE SHOULD NOT BE USED FOR STOCKPILES OR EQUIPMENT STORAGE.

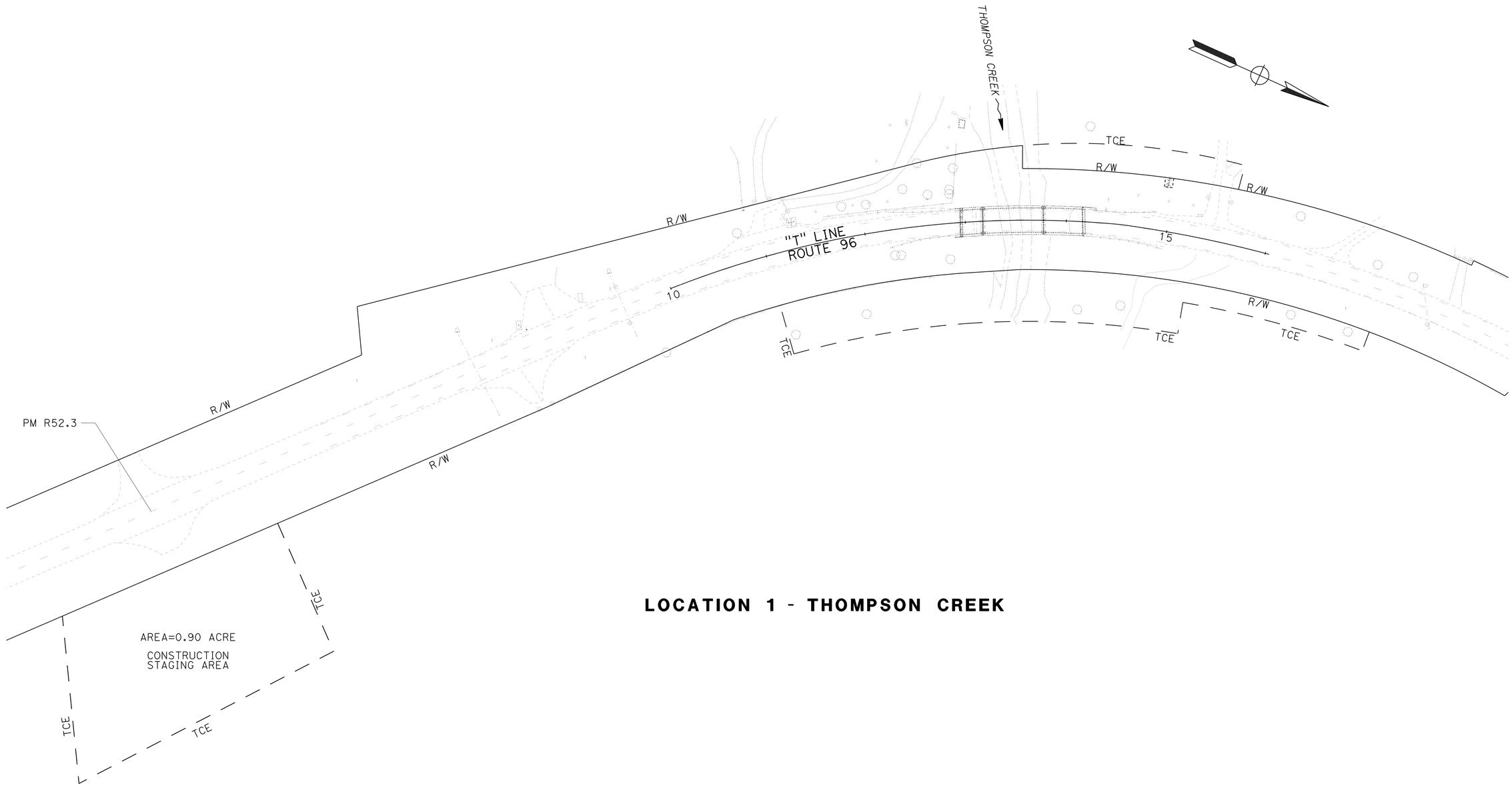

LOCATION 1 - THOMPSON CREEK

APPROVED FOR TCE WORK ONLY

CONSTRUCTION DETAILS
TEMPORARY STAGING AREAS

SCALE: 1" = 50'

C-16

REVISED BY | DATE REVISED
LORI EWENS | RUSSELL FLOOD
CALCULATED-DESIGNED BY | CHECKED BY
FUNCTIONAL SUPERVISOR: STEVE TOPAL

STATE OF CALIFORNIA - DEPARTMENT OF TRANSPORTATION
Caltrans
DESIGN

P:\proj\02\4E650_plans\pse\24e650ga016.dgn

LAST REVISION | DATE PLOTTED => 22-AUG-2016 | TIME PLOTTED => 15:21

BORDER LAST REVISED 7/2/2010 | USERNAME => s115152 | DGN FILE => 24e650ga016.dgn | RELATIVE BORDER SCALE IS IN INCHES 0 1 2 3 | UNIT 0319 | PROJECT NUMBER & PHASE 02 1200 0012 1

Dist	COUNTY	ROUTE	POST MILES TOTAL PROJECT	SHEET No.	TOTAL SHEETS
02	Sis	96	R52.5/88.4	27	208

Lori Ewens 06-12-16
REGISTERED CIVIL ENGINEER DATE

06-15-16
PLANS APPROVAL DATE

REGISTERED PROFESSIONAL ENGINEER LORI EWENS No. C43919 Exp. 6-30-17 CIVIL STATE OF CALIFORNIA

THE STATE OF CALIFORNIA OR ITS OFFICERS OR AGENTS SHALL NOT BE RESPONSIBLE FOR THE ACCURACY OR COMPLETENESS OF SCANNED COPIES OF THIS PLAN SHEET.

NOTES:

1. FOR ACCURATE RIGHT OF WAY DATA, CONTACT RIGHT OF WAY ENGINEERING AT THE DISTRICT OFFICE.

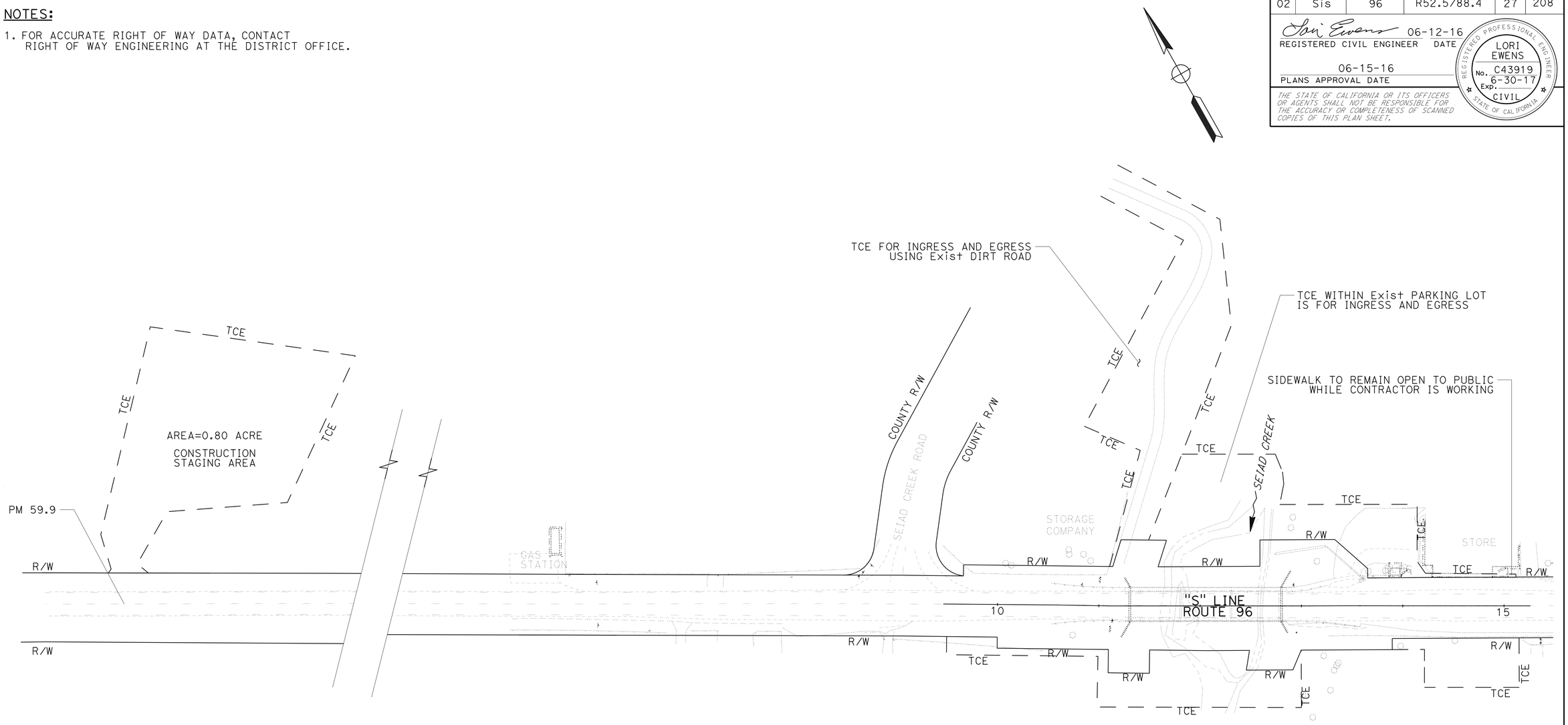

LOCATION 2 - SEIAD CREEK

APPROVED FOR TCE WORK ONLY

CONSTRUCTION DETAILS TEMPORARY CONSTRUCTION EASEMENT

SCALE: 1" = 50'

C-17

STATE OF CALIFORNIA - DEPARTMENT OF TRANSPORTATION
Caltrans
DESIGN

FUNCTIONAL SUPERVISOR: STEVE TOPAL
CALCULATED-DESIGNED BY: LORI EWENS
CHECKED BY: RUSSELL FLOOD
REVISED BY
DATE REVISED

P:\proj1\02\4E650_plans\pse\24e650ga017.dgn

LAST REVISION
DATE PLOTTED => 22-AUG-2016
TIME PLOTTED => 15:21

Dist	COUNTY	ROUTE	POST MILES TOTAL PROJECT	SHEET No.	TOTAL SHEETS
02	Sis	96	R52.5/88.4	28	208

Lori Ewens 06-12-16
REGISTERED CIVIL ENGINEER DATE

06-15-16
PLANS APPROVAL DATE

REGISTERED PROFESSIONAL ENGINEER
LORI EWENS
No. C43919
Exp. 6-30-17
CIVIL
STATE OF CALIFORNIA

THE STATE OF CALIFORNIA OR ITS OFFICERS OR AGENTS SHALL NOT BE RESPONSIBLE FOR THE ACCURACY OR COMPLETENESS OF SCANNED COPIES OF THIS PLAN SHEET.

NOTES:

1. FOR ACCURATE RIGHT OF WAY DATA, CONTACT RIGHT OF WAY ENGINEERING AT THE DISTRICT OFFICE.

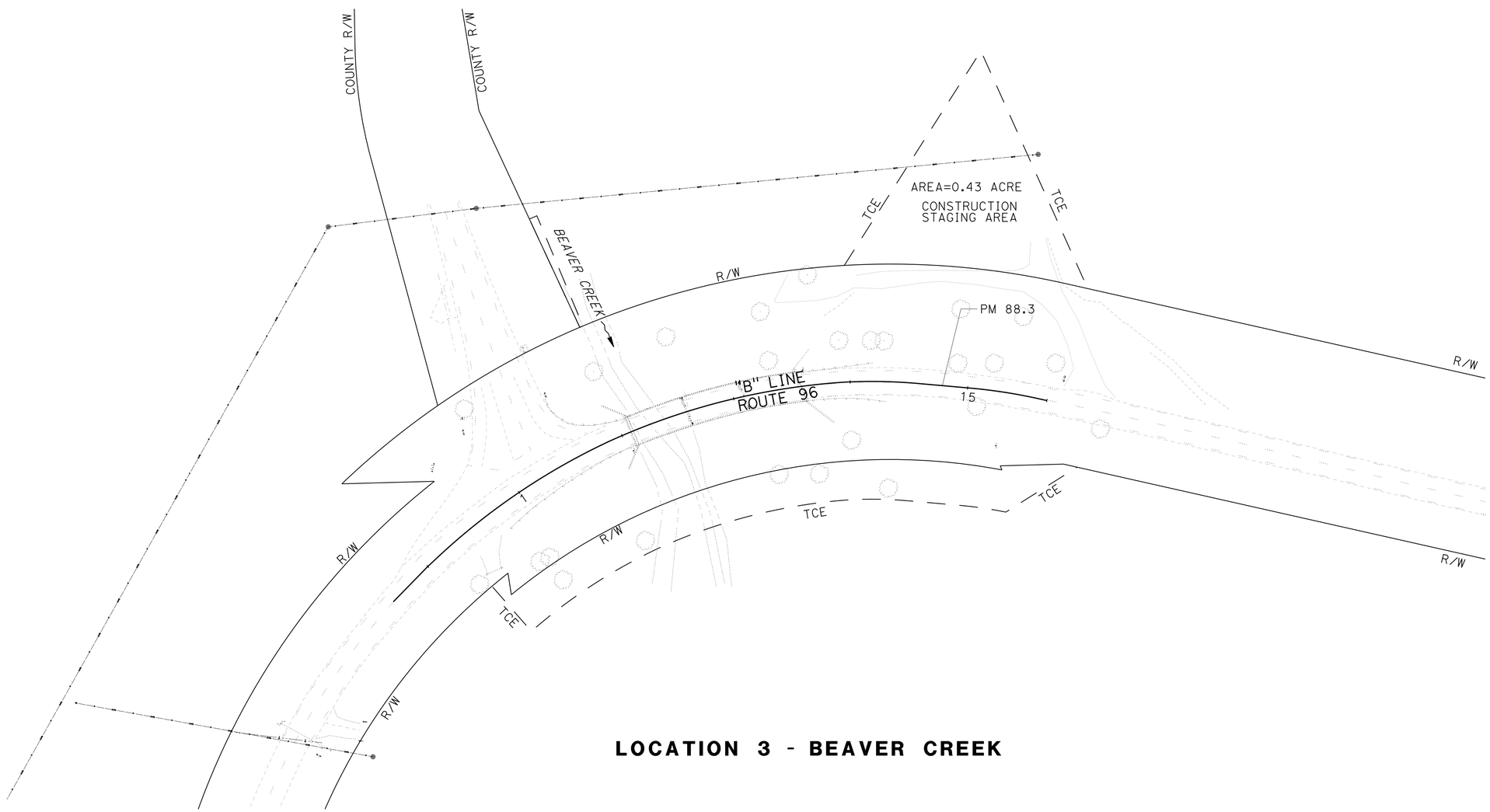

LOCATION 3 - BEAVER CREEK

CONSTRUCTION DETAILS TEMPORARY CONSTRUCTION EASEMENT

SCALE: 1" = 50'

C-18

REVISED BY | DATE REVISED
LORI EWENS | RUSSELL FLOOD
CALCULATED-DESIGNED BY | CHECKED BY
FUNCTIONAL SUPERVISOR
STEVE TOPAL
STATE OF CALIFORNIA - DEPARTMENT OF TRANSPORTATION
Caltrans
DESIGN

P:\proj1\02\4E650_plans\pse\24e650ga018.dgn

LAST REVISION DATE PLOTTED => 22-AUG-2016
TIME PLOTTED => 15:21

Dist	COUNTY	ROUTE	POST MILES TOTAL PROJECT	SHEET No.	TOTAL SHEETS
02	Sis	96	R52.5/88.4	29	208

Lori Ewens 06-12-16
REGISTERED CIVIL ENGINEER DATE

06-15-16
PLANS APPROVAL DATE

REGISTERED PROFESSIONAL ENGINEER LORI EWENS No. C43919 Exp. 6-30-17 CIVIL STATE OF CALIFORNIA

THE STATE OF CALIFORNIA OR ITS OFFICERS OR AGENTS SHALL NOT BE RESPONSIBLE FOR THE ACCURACY OR COMPLETENESS OF SCANNED COPIES OF THIS PLAN SHEET.

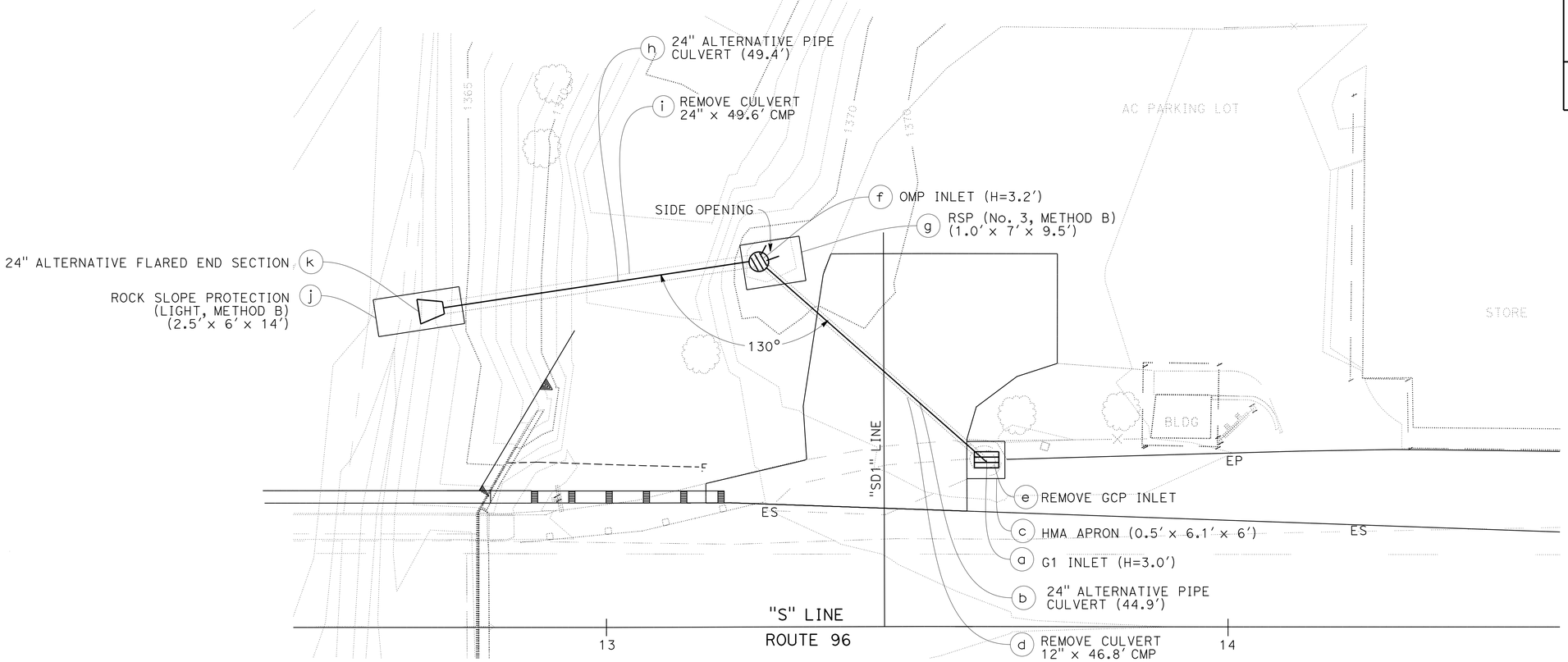

PLAN
DRAINAGE SYSTEM 1

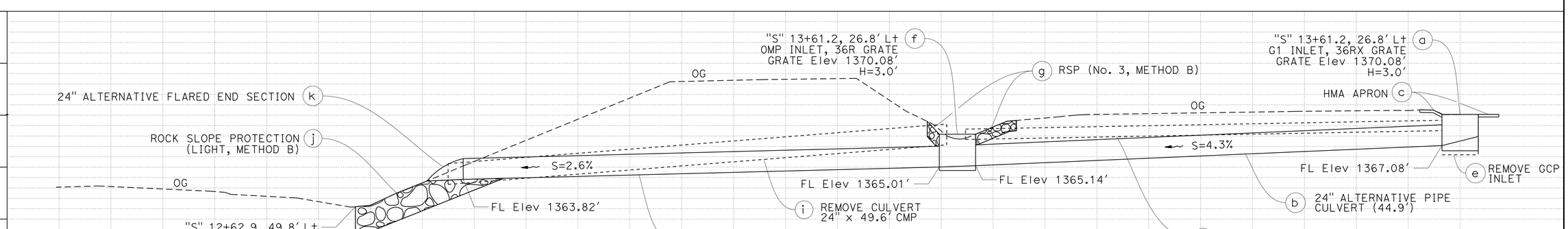

PROFILE
DRAINAGE SYSTEM 1

APPROVED FOR DRAINAGE WORK ONLY

LOCATION 2 - SEIAD CREEK
DRAINAGE DETAILS
NO SCALE

DD-1

STATE OF CALIFORNIA - DEPARTMENT OF TRANSPORTATION
Caltrans DESIGN

RUSSELL FLOOD — REVISED BY
LORI EWENS — DATE REVISED
CALCULATED-DESIGNED BY
CHECKED BY
STEVE TOPAL — FUNCTIONAL SUPERVISOR

P:\proj1\02\4E650_plans\pse\24e650ic001.dgn

LAST REVISION 02-26-16 | DATE PLOTTED => 22-AUG-2016 | TIME PLOTTED => 15:21

Dist	COUNTY	ROUTE	POST MILES TOTAL PROJECT	SHEET No.	TOTAL SHEETS
02	Sis	96	R52.5/88.4	30	208

Lori Ewens 06-12-16
REGISTERED CIVIL ENGINEER DATE

06-15-16
PLANS APPROVAL DATE

REGISTERED PROFESSIONAL ENGINEER LORI EWENS No. C43919 Exp. 6-30-17 CIVIL STATE OF CALIFORNIA

THE STATE OF CALIFORNIA OR ITS OFFICERS OR AGENTS SHALL NOT BE RESPONSIBLE FOR THE ACCURACY OR COMPLETENESS OF SCANNED COPIES OF THIS PLAN SHEET.

NOTE:

1. (N) - NOT A SEPARATE PAY ITEM, FOR INFORMATION ONLY

DRAINAGE QUANTITIES

DRAINAGE SYSTEM No	DRAINAGE UNIT No.	REMOVE CULVERT	REMOVE INLET	HOT MIX ASPHALT (TYPE A, WARM MIX TECHNOLOGY) *	PLACE HOT MIX ASPHALT (MISCELLANEOUS AREA)	24" ALTERNATIVE PIPE CULVERT	36" CORRUGATED STEEL PIPE INLET (.168" THICK)	24" ALTERNATIVE FLARED END SECTION	MINOR CONCRETE (MINOR STRUCTURE)	ROCK SLOPE PROTECTION (LIGHT, METHOD B) (CY) **	ROCK SLOPE PROTECTION (No. 3, METHOD B) (CY)	Misc IRON AND STEEL	HEIGHT OF INLET (N)	DESCRIPTION
		LF	EA	TON	SQYD	LF	LF	EA	CY	CY	CY	LB	LF	
1	a								0.95			239	3	G1 INLET, TYPE 24-12X GRATE
	b					44.9								24" x 44.9' APC
	c			1.2	3.3									HMA APRON
	d	46.8												REMOVE 12" CSP
	e		1										3.9	REMOVE GCP INLET
	f						3.7					236	3.2	OMP INLET, 36R GRATE
	g										2.6			RSP
	h					49.4								24" APC
	i	49.6												REMOVE 24" CSP
	j							1						24" AFES
	k									3.9				RSP
TOTAL		96.4	1	1.2	3.3	94.3	3.7	1	0.95	3.9	2.6	475		

* INCLUDED IN ROADWAY QUANTITIES TABLE (Q-1)
** INCLUDED IN ROCK SLOPE PROTECTION TABLE (Q-2)

DRAINAGE QUANTITIES
DQ-1

REVISED BY | DATE REVISED
RUSSELL FLOOD | LORI EWENS
CALCULATED-DESIGNED BY | CHECKED BY
FUNCTIONAL SUPERVISOR: STEVE TOPAL

STATE OF CALIFORNIA - DEPARTMENT OF TRANSPORTATION
Caltrans
DESIGN

P:\proj1\02\4E650_plans\pse\24e650id001.dgn

LAST REVISION 02-23-16 | DATE PLOTTED => 22-AUG-2016 | TIME PLOTTED => 15:21

Dist	COUNTY	ROUTE	POST MILES TOTAL PROJECT	SHEET No.	TOTAL SHEETS
02	Sis	96	R52.5/88.4	31	208

Lori Ewens 06-12-16
REGISTERED CIVIL ENGINEER DATE

06-15-16
PLANS APPROVAL DATE

REGISTERED PROFESSIONAL ENGINEER
LORI EWENS
No. C43919
Exp. 6-30-17
CIVIL
STATE OF CALIFORNIA

THE STATE OF CALIFORNIA OR ITS OFFICERS OR AGENTS SHALL NOT BE RESPONSIBLE FOR THE ACCURACY OR COMPLETENESS OF SCANNED COPIES OF THIS PLAN SHEET.

NOTES:

1. FOR ACCURATE RIGHT OF WAY DATA, CONTACT RIGHT OF WAY ENGINEERING AT THE DISTRICT OFFICE.
2. DURING CONSTRUCTION FIBER OPTIC ON BRIDGE TO BE PROTECTED IN PLACE.
3. DURING CONSTRUCTION BURIED FIBER OPTIC TO BE PROTECTED IN PLACE.
4. PRIOR TO CONSTRUCTION PULL BOX WILL BE RELOCATED OUTSIDE ROADWAY PRISM BY OTHERS.

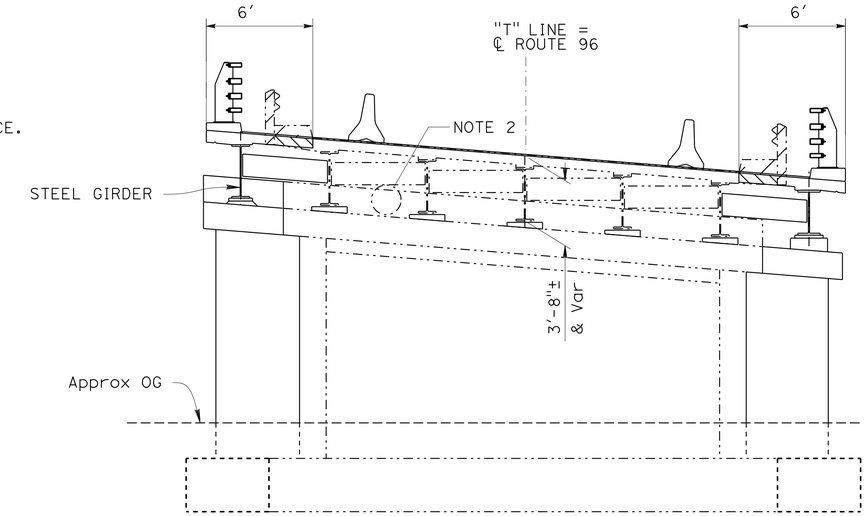

TYPICAL SECTION
NO SCALE

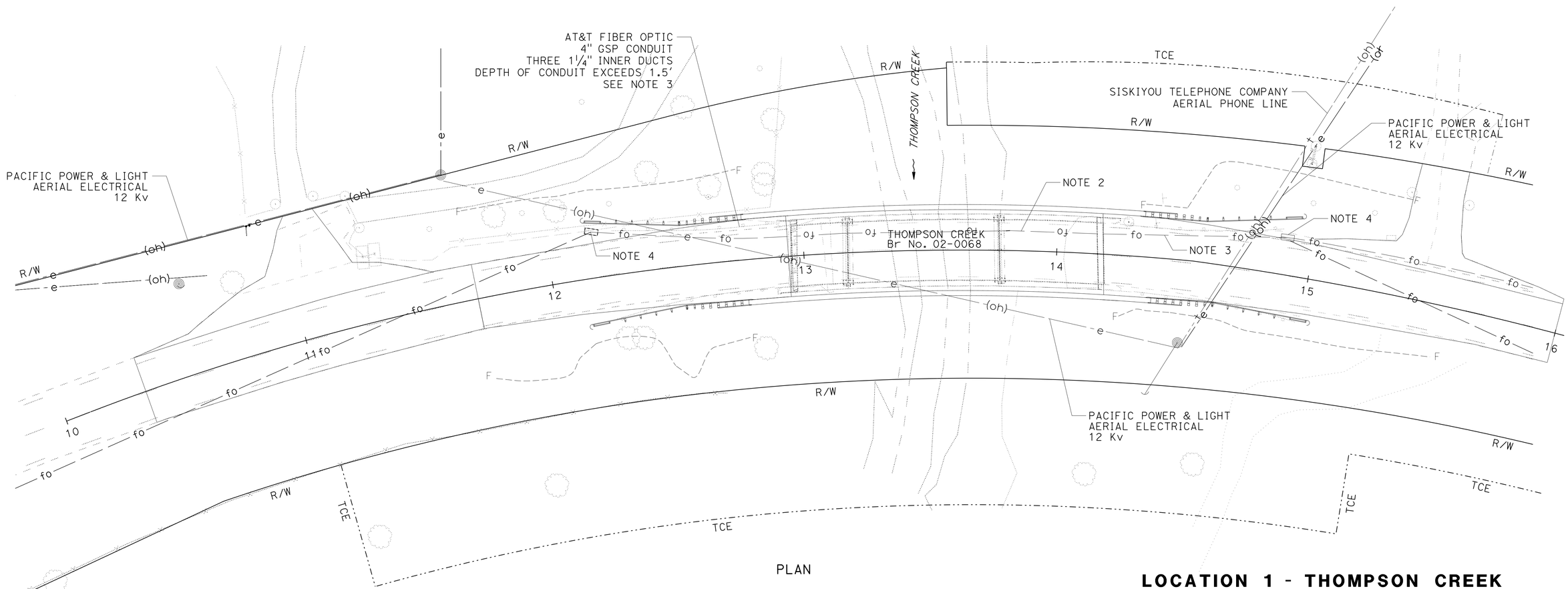

PLAN

LOCATION 1 - THOMPSON CREEK
UTILITY PLAN
SCALE: 1" = 20'

U-1

APPROVED FOR UTILITY WORK ONLY

STATE OF CALIFORNIA - DEPARTMENT OF TRANSPORTATION
DESIGN
Caltrans

FUNCTIONAL SUPERVISOR: STEVE TOPAL
CALCULATED-DESIGNED BY: LORI EWENS
CHECKED BY: RUSSELL FLOOD
REVISED BY / DATE REVISED

P:\proj1\02\4E650_plans\pse\24e650ka001.dgn

LAST REVISION / DATE PLOTTED => 22-AUG-2016 / TIME PLOTTED => 15:21

BORDER LAST REVISED 7/2/2010 | USERNAME => s115152 | DGN FILE => 24e650ka001.dgn | RELATIVE BORDER SCALE IS IN INCHES 0 1 2 3 | UNIT 0319 | PROJECT NUMBER & PHASE 02 1200 0012 1

Dist	COUNTY	ROUTE	POST MILES TOTAL PROJECT	SHEET No.	TOTAL SHEETS
02	Sis	96	R52.5/88.4	32	208

Lori Ewens 06-12-16
REGISTERED CIVIL ENGINEER DATE

06-15-16
PLANS APPROVAL DATE

REGISTERED PROFESSIONAL ENGINEER LORI EWENS No. C43919 Exp. 6-30-17 CIVIL STATE OF CALIFORNIA

THE STATE OF CALIFORNIA OR ITS OFFICERS OR AGENTS SHALL NOT BE RESPONSIBLE FOR THE ACCURACY OR COMPLETENESS OF SCANNED COPIES OF THIS PLAN SHEET.

NOTES:

1. FOR ACCURATE RIGHT OF WAY DATA, CONTACT RIGHT OF WAY ENGINEERING AT THE DISTRICT OFFICE.
2. PIOR TO CONSTRUCTION FIBER OPTIC WILL BE REMOVED FROM THE BRIDGE AND PLACE ON POWER POLES BY OTHERS.
3. AT&T WILL PROVIDE THREADED RODS TO BE CAST IN PLACE DURING CONSTRUCTION OF BRIDGE.
4. PRIOR TO CONSTRUCTION PULL BOX WILL BE RELOCATED OUTSIDE THE ROADWAY PRISM BY OTHERS.

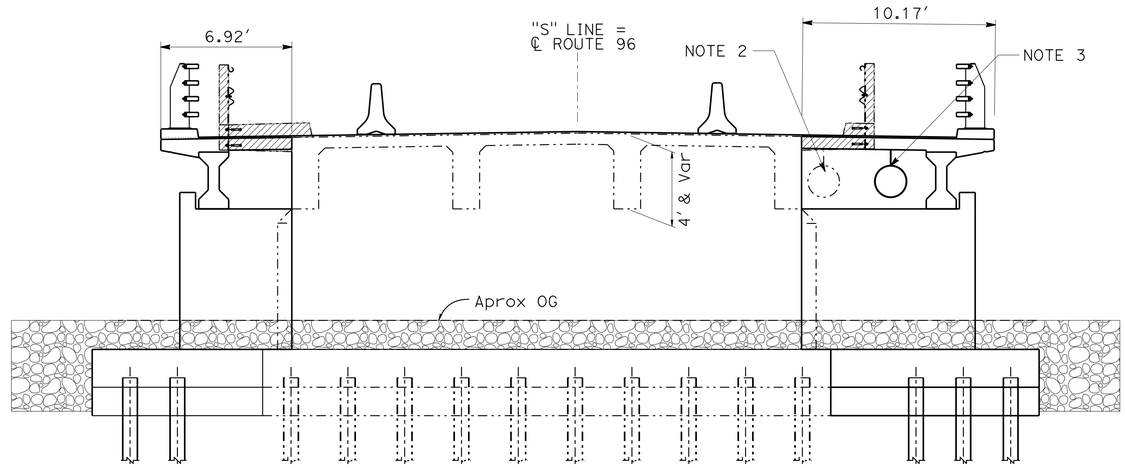

TYPICAL SECTION

NO SCALE

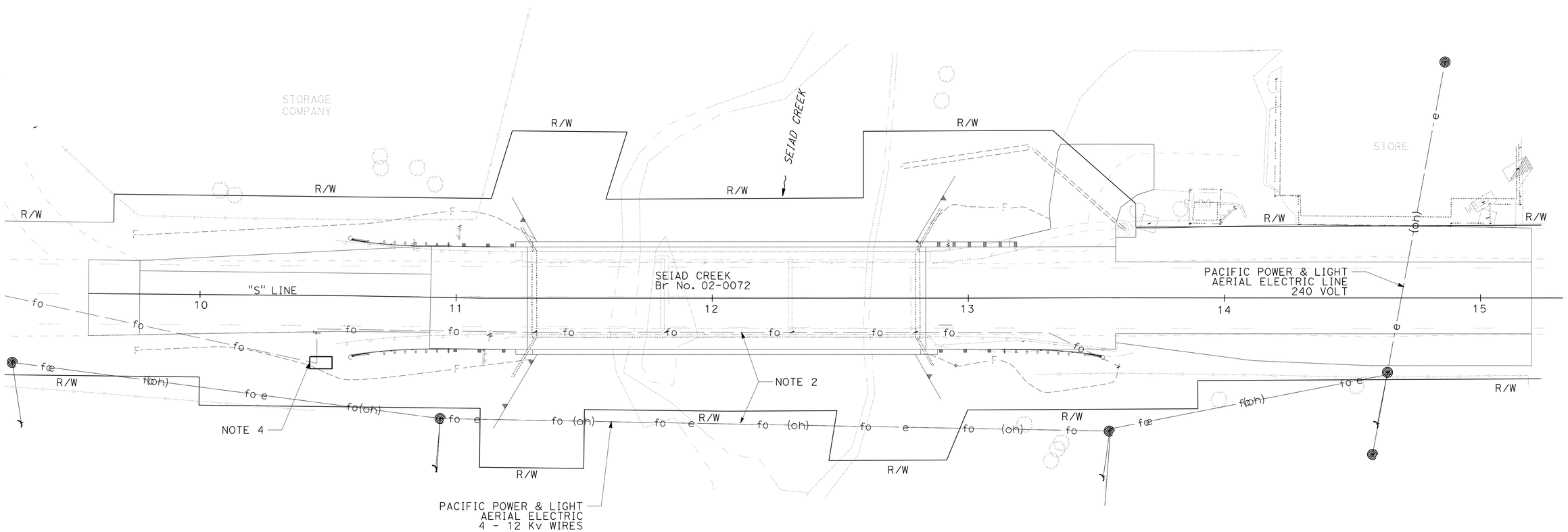

LOCATION 2 - SEIAD CREEK

UTILITY PLAN

SCALE: 1" = 20'

U-2

APPROVED FOR UTILITY WORK ONLY

REVISED BY	DATE REVISED

CALCULATED-DESIGNED BY	CHECKED BY
LORI EWENS	RUSSELL FLOOD

FUNCTIONAL SUPERVISOR: STEVE TOPAL

STATE OF CALIFORNIA - DEPARTMENT OF TRANSPORTATION

Caltrans

DESIGN

P:\proj1\02\4E650_plans\pse\24e650ka002.dgn

LAST REVISION — DATE PLOTTED => 22-AUG-2016 TIME PLOTTED => 15:21

Dist	COUNTY	ROUTE	POST MILES TOTAL PROJECT	SHEET No.	TOTAL SHEETS
02	Sis	96	R52.5/88.4	33	208

Lori Ewens 06-12-16
REGISTERED CIVIL ENGINEER DATE

06-15-16
PLANS APPROVAL DATE

REGISTERED PROFESSIONAL ENGINEER
LORI EWENS
No. C43919
Exp. 6-30-17
CIVIL
STATE OF CALIFORNIA

THE STATE OF CALIFORNIA OR ITS OFFICERS OR AGENTS SHALL NOT BE RESPONSIBLE FOR THE ACCURACY OR COMPLETENESS OF SCANNED COPIES OF THIS PLAN SHEET.

NOTES:

1. EXACT SIGN LOCATIONS TO BE DETERMINED BY THE ENGINEER.
2. SIGNS SHOWN WITH (CA) INDICATE CALIFORNIA SIGN CODES, OTHERWISE FEDERAL SIGN CODES ARE SHOWN.
3. FOR LOCATION OF STOP BAR SEE TRAFFIC HANDLING PLANS.
4. SEE ELECTRICTAL PLANS.

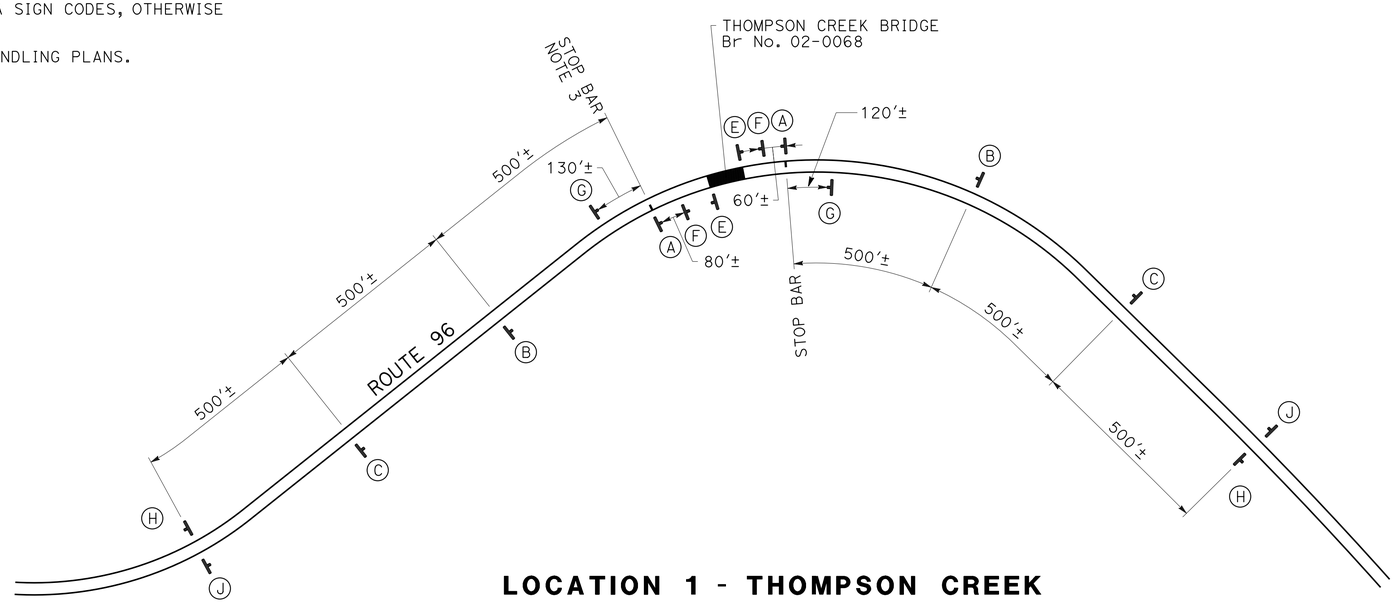

LOCATION 1 - THOMPSON CREEK

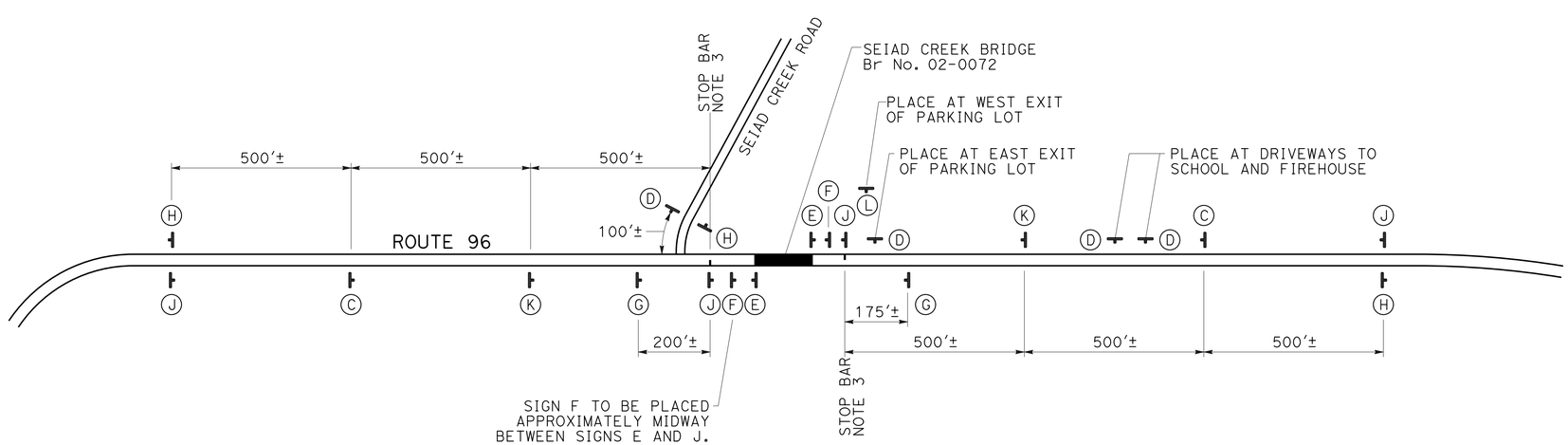

LOCATION 2 - SEIAD CREEK

CONSTRUCTION AREA SIGNS

NO SCALE

CS-1

APPROVED FOR CONSTRUCTION AREA SIGN WORK ONLY

REVISED BY | DATE REVISED
AUSTIN BUIST | LORI EWENS
CALCULATED-DESIGNED BY | CHECKED BY
FUNCTIONAL SUPERVISOR: STEVE TOPAL

STATE OF CALIFORNIA - DEPARTMENT OF TRANSPORTATION
Caltrans
DESIGN

P:\proj1\02\4E650_plans\pse\24e6501a001.dgn

DATE PLOTTED => 22-AUG-2016
TIME PLOTTED => 15:21

Dist	COUNTY	ROUTE	POST MILES TOTAL PROJECT	SHEET No.	TOTAL SHEETS
02	Sis	96	R52.5/88.4	34	208

Lori Ewens 06-12-16
REGISTERED CIVIL ENGINEER DATE

06-15-16
PLANS APPROVAL DATE

REGISTERED PROFESSIONAL ENGINEER LORI EWENS No. C43919 Exp. 6-30-17 CIVIL STATE OF CALIFORNIA

THE STATE OF CALIFORNIA OR ITS OFFICERS OR AGENTS SHALL NOT BE RESPONSIBLE FOR THE ACCURACY OR COMPLETENESS OF SCANNED COPIES OF THIS PLAN SHEET.

NOTES:

1. EXACT SIGN LOCATIONS TO BE DETERMINED BY THE ENGINEER.
2. SIGNS SHOWN WITH (CA) INDICATE CALIFORNIA SIGN CODES, OTHERWISE FEDERAL SIGN CODES ARE SHOWN.
3. FOR LOCATION OF STOP BAR SEE TRAFFIC HANDING PLANS.
4. SEE ELECTRICAL PLANS.

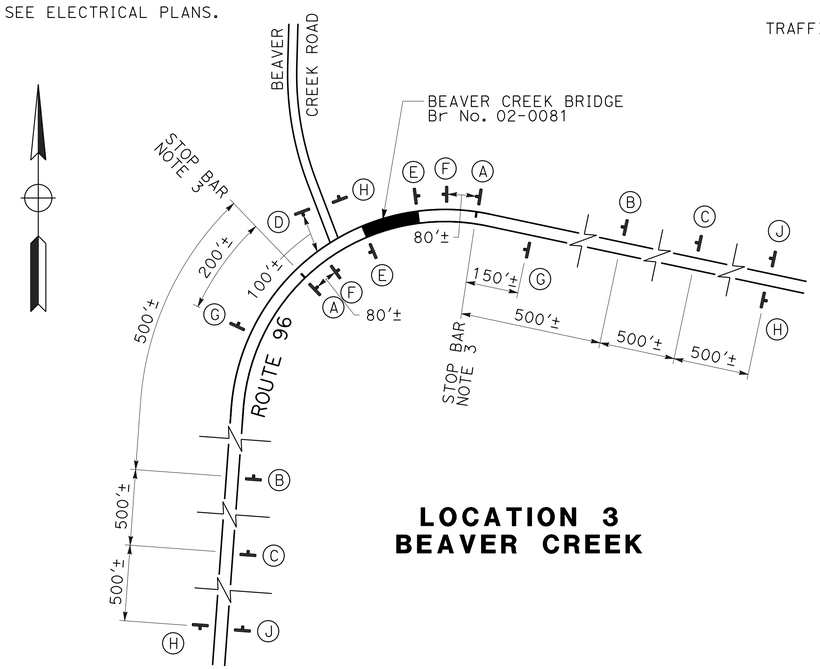

LOCATION 3
BEAVER CREEK

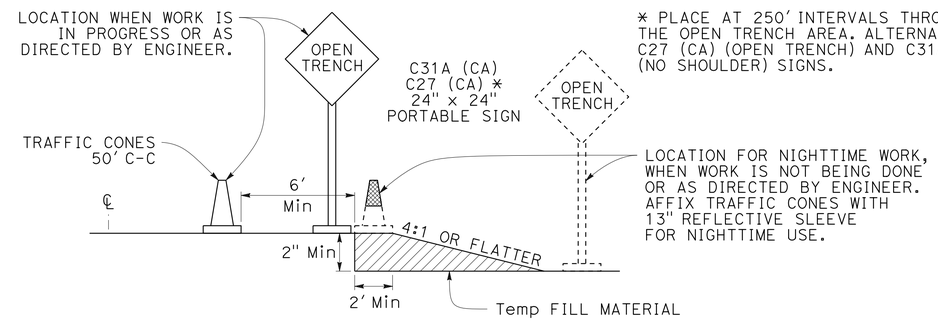

OPEN TRENCH SIGNING AND MARKING

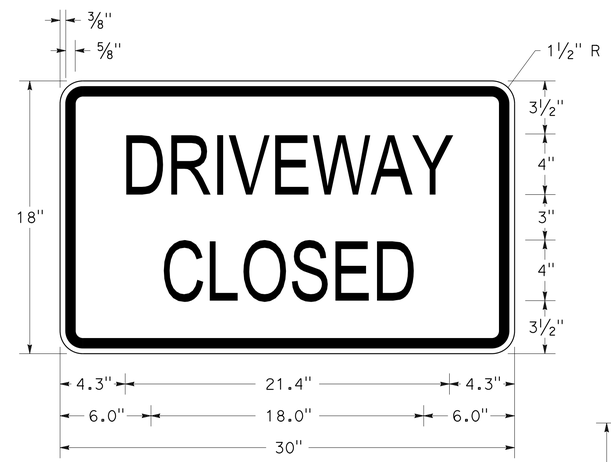

C23B (CA) SIGN PANEL DETAIL

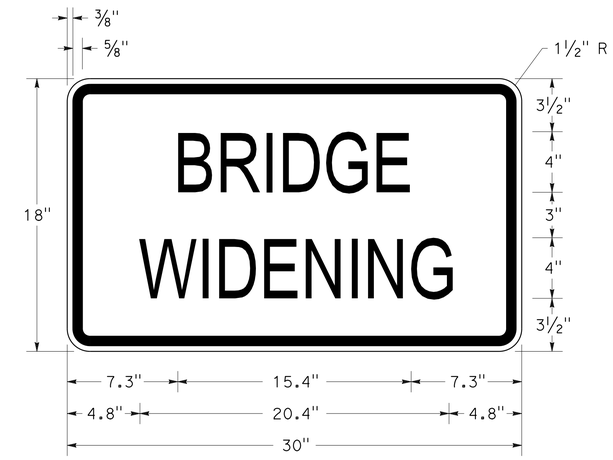

C23B (CA) SIGN PANEL DETAIL

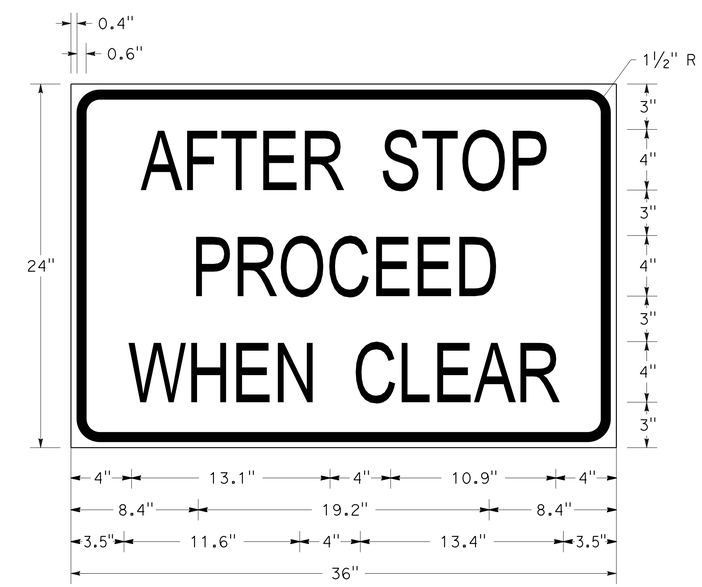

R-1 SIGN DETAIL

CONSTRUCTION AREA SIGNS (PORTABLE MOUNTED)

SIGN	CODE	PANEL SIZE INCHES	MESSAGE	No. AND SIZE OF POSTS	No. OF SIGNS
L	C23B (CA)	30 x 18	DRIVEWAY CLOSED	MOUNT TO TYPE III BARRACADE	1
				TOTAL	1

CONSTRUCTION AREA SIGNS (STATIONARY MOUNTED)

SIGN	CODE	PANEL SIZE INCHES	MESSAGE	FLASHING BEACON	No. AND SIZE OF POSTS	No. OF SIGNS
A	R10-6	24 x 36	STOP HERE ON RED		1 - 4" x 6"	4
B	W3-3	36 x 36	SIGNAL AHEAD SYMBOL		1 - 4" x 6"	4
C	W20-4	36 x 36	ONE LANE ROAD AHEAD		1 - 4" x 6"	6
D	W20-1	36 x 36	ROAD WORK AHEAD		1 - 4" x 6"	9
E	W1-4	30 x 30	WAG ARROW		1 - 4" x 6"	6
F	W11-2	30 x 30	PEDESTRIAN SYMBOL		1 - 4" x 6"	6
G	M4-9	30 x 24	PEDESTRIAN DETOUR		1 - 4" x 6"	6
H	G20-2	36 x 18	END ROAD WORK		2 - 4" x 6"	8
J	R-1	36 x 24	AFTER STOP PROCEED WHEN CLEAR	RED FLASHING BEACON	1 - 4" x 6"	2
	M6-2a	21 x 15	LOW LEFT ARROW SYMBOL			
K	W3-1	36 x 36	STOP AHEAD SYMBOL		1 - 4" x 6"	2
J	W20-1	36 x 24	ROAD WORK AHEAD		1 - 4" x 6"	2
	C23B (CA)	21 x 15	BRIDGE WIDENING			
					TOTAL	55

APPROVED FOR CONSTRUCTION AREA SIGN WORK ONLY

CONSTRUCTION AREA SIGNS
NO SCALE

CS-2

FUNCTIONAL SUPERVISOR: STEVE TOPAL
CALCULATED-DESIGNED BY: AUSTIN BUIST
CHECKED BY: LORI EWENS
REVISED BY / DATE REVISED

STATE OF CALIFORNIA - DEPARTMENT OF TRANSPORTATION
Caltrans DESIGN

P:\proj1\02\4E650_plans\pse\24e6501a002.dgn

DATE PLOTTED => 22-AUG-2016
TIME PLOTTED => 15:21
LAST REVISION

Dist	COUNTY	ROUTE	POST MILES TOTAL PROJECT	SHEET No.	TOTAL SHEETS
02	Sis	96	R52.5/88.4	35	208

Lori Ewens 06-12-16
REGISTERED CIVIL ENGINEER DATE

06-15-16
PLANS APPROVAL DATE

REGISTERED PROFESSIONAL ENGINEER LORI EWENS No. C43919 Exp. 6-30-17 CIVIL STATE OF CALIFORNIA

THE STATE OF CALIFORNIA OR ITS OFFICERS OR AGENTS SHALL NOT BE RESPONSIBLE FOR THE ACCURACY OR COMPLETENESS OF SCANNED COPIES OF THIS PLAN SHEET.

NOTES:

1. MINIMUM TRAFFIC OPENING WIDTH BETWEEN TEMPORARY RAILING IS 16′.
2. MAXIMUM TAPER FOR TEMPORARY RAILING IS 10:1.
3. MINIMUM CLEARANCE BETWEEN THE END OF TEMPORARY RAILING AND ETW IS 15′.
4. SEE ELECTRICAL PLANS.

LEGEND:

TEMPORARY IN-LINE CRASH CUSHION

TYPE III BARRICADE

(X) SIGN

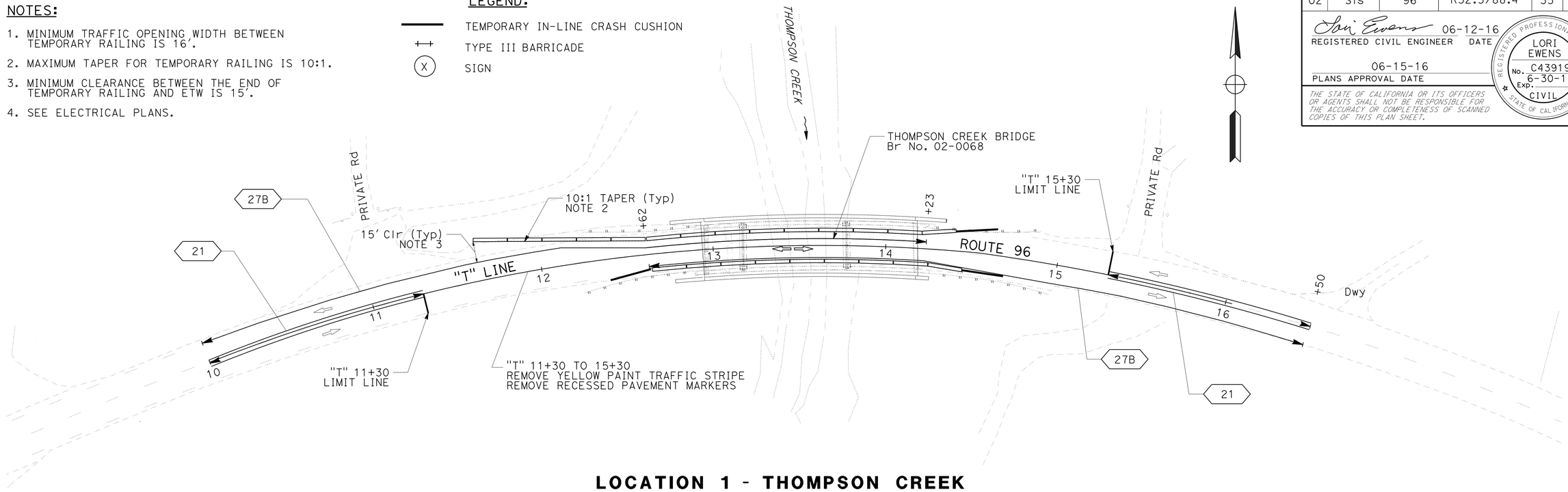

LOCATION 1 - THOMPSON CREEK

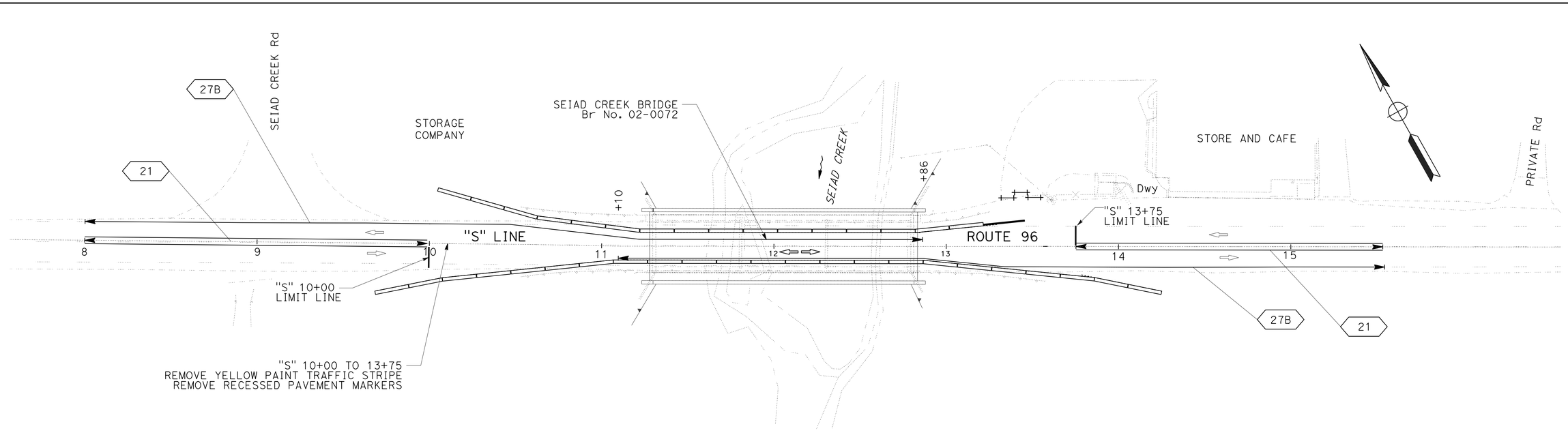

LOCATION 2 - SEIAD CREEK

APPROVED FOR TRAFFIC HANDLING WORK ONLY

LOCATION 1 AND 2
TRAFFIC HANDLING PLAN

NO SCALE

TH-1

REVISED BY | DATE REVISED
LORI EWENS | AUSTIN BUIST
CALCULATED-DESIGNED BY | CHECKED BY
FUNCTIONAL SUPERVISOR: STEVE TOPAL

STATE OF CALIFORNIA - DEPARTMENT OF TRANSPORTATION
Caltrans
DESIGN

P:\proj1\02\4E650_plans\pse\24e650md001.dgn

LAST REVISION | DATE PLOTTED => 22-AUG-2016 | TIME PLOTTED => 15:21

Dist	COUNTY	ROUTE	POST MILES TOTAL PROJECT	SHEET No.	TOTAL SHEETS
02	Sis	96	R52.5/88.4	36	208

Lori Ewens 06-12-16
REGISTERED CIVIL ENGINEER DATE

06-15-16
PLANS APPROVAL DATE

REGISTERED PROFESSIONAL ENGINEER
LORI EWENS
No. C43919
Exp. 6-30-17
CIVIL
STATE OF CALIFORNIA

THE STATE OF CALIFORNIA OR ITS OFFICERS OR AGENTS SHALL NOT BE RESPONSIBLE FOR THE ACCURACY OR COMPLETENESS OF SCANNED COPIES OF THIS PLAN SHEET.

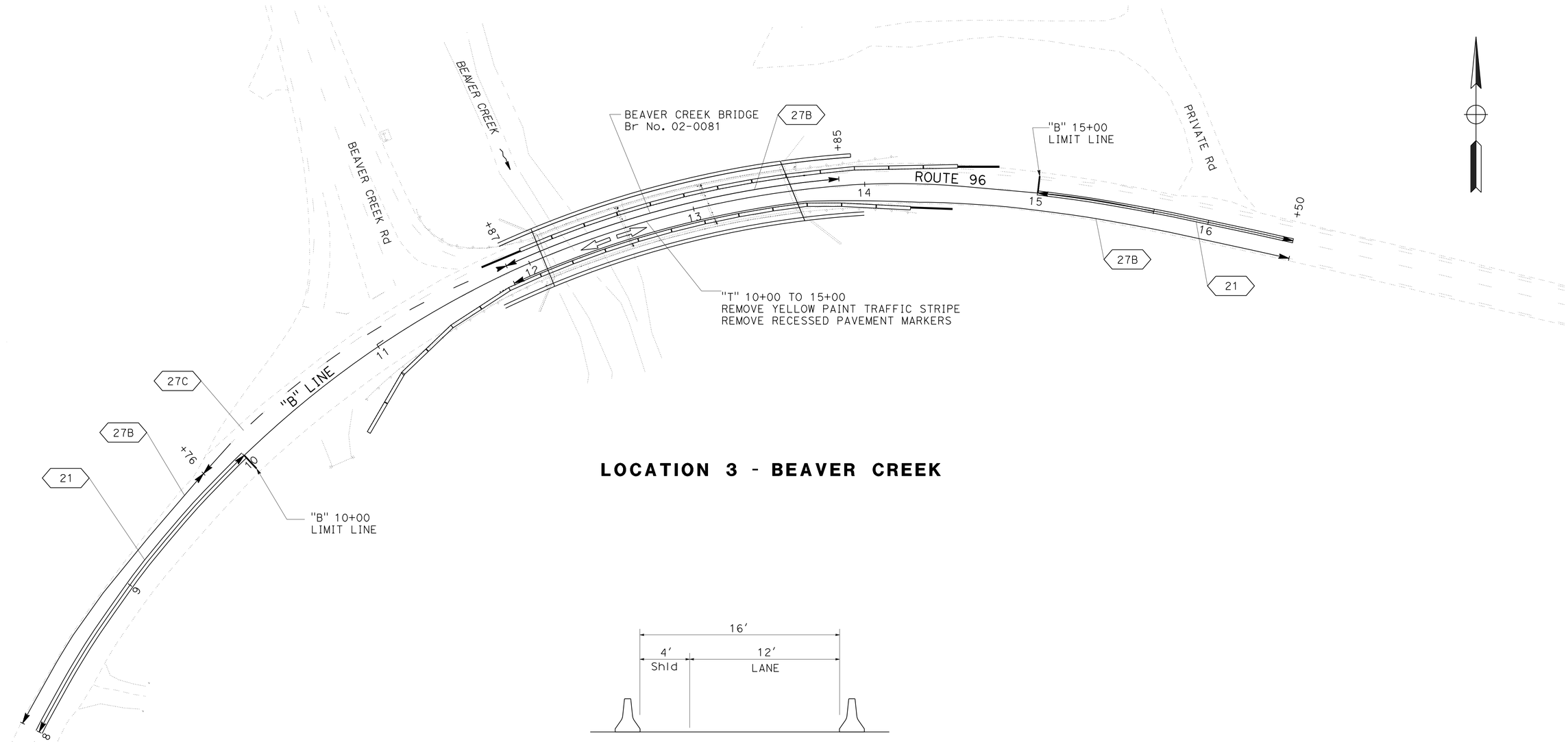

LOCATION 3 - BEAVER CREEK

TYPICAL TRAFFIC OPENING

LOCATIONS 1, 2, AND 3

APPROVED FOR TRAFFIC HANDLING WORK ONLY

LOCATION 3
TRAFFIC HANDLING PLAN

NO SCALE

TH-2

REVISED BY	DATE REVISED
LORI EWENS	AUSTIN BUIST
CALCULATED-DESIGNED BY	CHECKED BY
FUNCTIONAL SUPERVISOR	STEVE TOPAL

STATE OF CALIFORNIA - DEPARTMENT OF TRANSPORTATION
Caltrans
DESIGN

P:\proj1\02\4E650_plans\pse\24e650md002.dgn

LAST REVISION | DATE PLOTTED => 22-AUG-2016 | TIME PLOTTED => 15:21

Dist	COUNTY	ROUTE	POST MILES TOTAL PROJECT	SHEET No.	TOTAL SHEETS
02	Sis	96	R52.5/88.4	37	208

REGISTERED CIVIL ENGINEER 06-12-16 DATE

PLANS APPROVAL DATE 06-15-16

REGISTERED PROFESSIONAL ENGINEER ROBERT F. STINGER, Jr. No. C47883 Exp. 12-31-17 CIVIL STATE OF CALIFORNIA

THE STATE OF CALIFORNIA OR ITS OFFICERS OR AGENTS SHALL NOT BE RESPONSIBLE FOR THE ACCURACY OR COMPLETENESS OF SCANNED COPIES OF THIS PLAN SHEET.

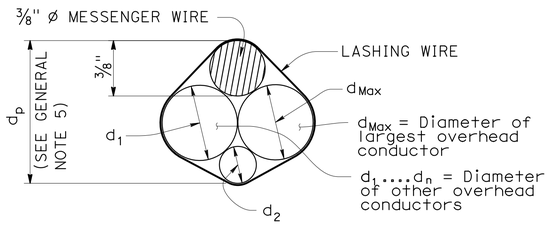

$d_p = 3/8" + d_{Max} + 0.30 * (d_1 + d_2 + \ldots d_n)$

PROJECTED DEPTH OF OVERHEAD BUNDLE, (d_p)

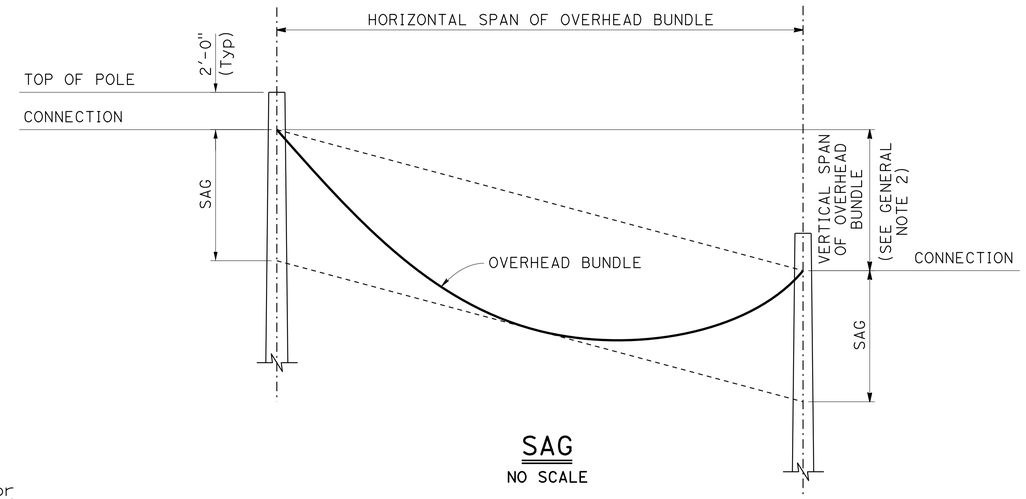

SAG

NO SCALE

Design: AASHTO Standard Specifications for Structural Supports for Highway Signs, Luminaires and Traffic Signals, Fifth Edition (LTS-5).

GROUP LOAD COMBINATIONS:

I Dead Load
II Dead Load + Wind Load
III Dead Load + 0.5 (Wind Load) + Ice Load
IV Fatigue: Not used

LOADING:

Wind Loading: 100 mph (3-second gust)
Wind Recurrence Interval: 10 years
Combined height, exposure, and elevated terrain factor = 1.05 (Exposure C, structure is not located on or over the top half of a ridge, hill, or escarpment)

Ice Loading: 3.0 psf on surfaces, 0.60 in radial thickness of ice at a unit weight of 60 pcf on overhead bundles

BASIC DESIGN VALUES:

Timber Poles: Fb = 1850 psi
Fv = 110 psi
Fcp = 230 psi
Fc = 950 psi
E = 1500 x 10^3 psi

DESIGN WIRE BREAKING STRENGTHS:

ASTM A475, Utilities Grade, 7 strand modified by termination efficiency factor of 0.8

FOUNDATION DESIGN NOTES:

1. Pole embedment depth design is based on Broms' approximate procedure as described in Article 13.6 of AASHTO LTS-5.

2. Embedment depth is calculated based on following soil parameters,
Cohesive Soil:
Shear strength of soil c = 1500 psf.
Cohesionless Soil:
Ø = 30 deg, γ = 120 pcf.
Soil assumed to be unsaturated.

3. An overload factor of 2.0 and an undercapacity factor of 0.7 were used for safety factor of 2.86.

4. Allowable vertical bearing pressure at the end bearing of poles is 3000 psf at 6 feet or more embedment.

5. Guy wire anchor minimum allowable tension capacity, "Qa" = 8,900 lbs.

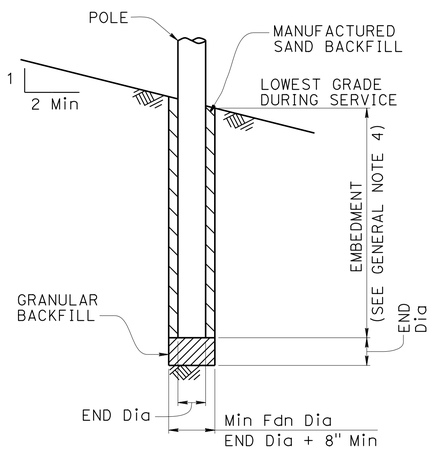

POLE FOUNDATION

GENERAL NOTES:

1. The messenger wire and any combination of overhead conductors must not exceed either a self weight of 3.0 lb/ft or the maximum d in the pole selection tables.

2. The maximum vertical span is 10% of the horizontal span.

3. For poles with adjacent unbalanced horizontal spans, the shortest horizontal span must be at least 50% of the largest horizontal span.

4. Add 2'-0" for slopes above 1V:4H.

5. For a pole supporting multiple spans, calculate d_p for each span and use the largest value.

6. Do not exceed the attachments shown.

DIAMETERS AND SELF WEIGHT OF OVERHEAD CONDUCTORS

CONDUCTOR OR CABLE TYPE	DIAMETER d (in)	WEIGHT w (plf)
3 CONDUCTOR SIGNAL CABLE (3CSC)	0.400	0.0980
5 CONDUCTOR SIGNAL CABLE (5CSC)	0.500	0.1560
9 CONDUCTOR SIGNAL CABLE (9CSC)	0.650	0.2760
12 CONDUCTOR SIGNAL CABLE (12CSC)	0.800	0.3970
28 CONDUCTOR SIGNAL CABLE (28CSC)	0.900	0.6490
1-#14	0.166	0.0235
1-#12	0.185	0.0330
1-#10	0.210	0.0476
1-#8	0.271	0.0774
1-#6	0.310	0.1130
1-#4	0.359	0.1690
1-#3	0.388	0.2080
1-#2	0.420	0.2560
1-#1	0.498	0.3340
6-CONDUCTOR SIGNAL INTERCONNECT CABLE (SIC)	0.350	0.0860
12-CONDUCTOR SIGNAL INTERCONNECT CABLE (SIC)	0.500	0.1440
DETECTOR LEAD-IN CABLE (DLC)	0.310	0.0440
12 to 48-STRAND FIBER OPTIC CABLE (48FOC)	0.424	0.0600
72-STRAND FIBER OPTIC CABLE (72FOC)	0.484	0.0770
96-STRAND FIBER OPTIC CABLE (96FOC)	0.535	0.1050
144-STRAND FIBER OPTIC CABLE (144FOC)	0.670	0.1890
3/8" Ø MESSENGER WIRE	0.375	0.2730

TRAFFIC HANDLING DETAILS

NO SCALE

THD-1

REVISED BY | DATE REVISED
ROB STINGER | LORI EWENS
CALCULATED-DESIGNED BY | CHECKED BY
FUNCTIONAL SUPERVISOR
STEVE TOPAL

STATE OF CALIFORNIA - DEPARTMENT OF TRANSPORTATION
Caltrans DESIGN

P:\proj1\02\4E650_plans\pse\24e650me001.dgn

LAST REVISION | DATE PLOTTED => 22-AUG-2016 | TIME PLOTTED => 15:21

Dist	COUNTY	ROUTE	POST MILES TOTAL PROJECT	SHEET No.	TOTAL SHEETS
02	Sis	96	R52.5/88.4	38	208

REGISTERED CIVIL ENGINEER 06-12-16 DATE

06-15-16
PLANS APPROVAL DATE

REGISTERED PROFESSIONAL ENGINEER ROBERT F. STINGER, Jr. No. C47883 Exp. 12-31-17 CIVIL STATE OF CALIFORNIA

THE STATE OF CALIFORNIA OR ITS OFFICERS OR AGENTS SHALL NOT BE RESPONSIBLE FOR THE ACCURACY OR COMPLETENESS OF SCANNED COPIES OF THIS PLAN SHEET.

LEGEND

Wood Pole No Attachments

A Wood Pole with Attachments

—OH— Overhead Bundle

POLE SELECTION TABLE

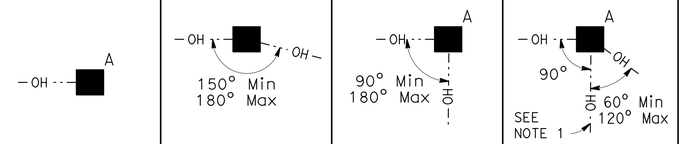

			CASE 1N				CASE 2N				CASE 3N				CASE 4N				CASE 5N
		MAXIMUM d_p	1"	1.5"	2.0"	2.5"	1"	1.5"	2.0"	2.5"	1.0"	1.5"	2.0"	2.5"	1"	1.5"	2.0"	2.5"	N/A
OVERHEAD BUNDLE HORIZONTAL SPAN (Max)	50′	MINIMUM POLE CLASS	H-1	H-2	H-2	H-2	4	3	2	1	H-2	H-2	H-3	H-3	H-4	H-4	H-4	H-5	CLASS 1 E = 10′
		POLE EMBEDMENT (E)	11′				10′				11′				12′				
	100′	MINIMUM POLE CLASS	H-2	H-3	H-4	H-5	1	H-1	H-2	H-3	H-4	H-5	H-5	H-6	H-5	H-5	H-6		
		POLE EMBEDMENT (E)	12′				11′				12′				12′				
	150′	MINIMUM POLE CLASS	H-4	H-5	H-6		H-1	H-2	H-3	H-5	H-6				H-6				
		POLE EMBEDMENT (E)	12′				12′				12′				12′				
	200′	MINIMUM POLE CLASS	H-5	H-6			H-2	H-3	H-5										
		POLE EMBEDMENT (E)	12′				12′												

1. CCTV CAMERA ASSEMBLY OR VEHICLE DETECTION SYSTEM
2. OVERHEAD BUNDLE CONSISTING OF A " ø MESSENGER WIRE, OVERHEAD CONDUCTORS, AND LASHING WIRE
3. LUMINAIRE WITH MAST ARM
4. PEDESTRIAN PUSH BUTTON ASSEMBLY OR ACCESSIBLE PUSH BUTTON ASSEMBLY
5. SIGNAL FACE WITH 3 INDICATIONS OR SINGLE SHEET SIGN PANEL (10 SQFT MAX)
6. RISER WITH WEATHER HEAD AS REQUIRED
7. PULL BOX AS REQUIRED
8. GROUNDING AS REQUIRED
9. SINGLE FLASHING BEACON OR SINGLE SHEET SIGN PANEL (4 SQFT MAX)
10. SINGLE SHEET SIGN PANEL (4′ X 4′ MAX) OR SIGNAL FACE WITH 3 INDICATIONS
11. FLASHING BEACON CONTROL ASSEMBLY
12. NEMA 3R ENCLOSURE, 26"(W) X 56"(H) X 12"(D) MAX DIMENSIONS. MAX WEIGHT INCLUDING BATTERIES, 450 LBS
13. 25′ SQFT MAX TOTAL PHOTOVOLTAIC PANELS MOUNTED AS SHOWN AS REQUIRED
14. 2-12" FLASHING BEACONS

NOTES:

1. IN ADDITION TO OTHER RESTRICTIONS ON MAXIMUM HORIZONTAL SPAN, THIS HORIZONTAL SPAN MUST NOT EXCEED 100′.
2. CASES 1N, 3N AND 4N MAY SUBSTITUTE THE ATTACHMENTS SHOWN IN CASE 5N IF THE PHOTOVOLTAIC PANEL IS NOT INCLUDED.
3. FOR CASE 1N WITHOUT AN OVERHEAD BUNDLE (ITEM 2) USE MINIMUM POLE CLASS H-1 WITH E=11′.

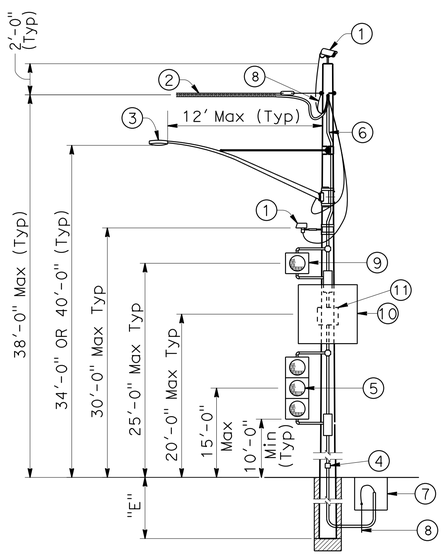

CASE 1N
POLE AT DEAD END WITH ATTACHMENTS
SEE NOTE 2

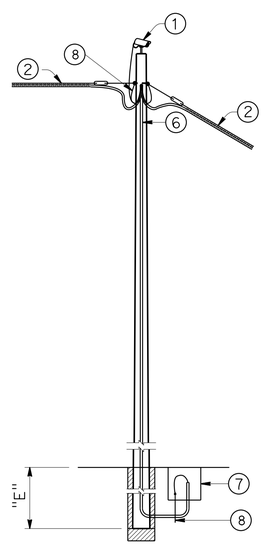

CASE 2N
POLE AT TANGENT WITHOUT ATTACHMENTS

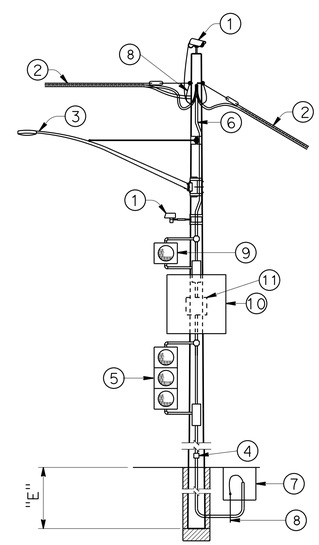

CASE 3N
POLE AT TANGENT OR CORNER WITH ATTACHMENTS
SEE NOTE 2

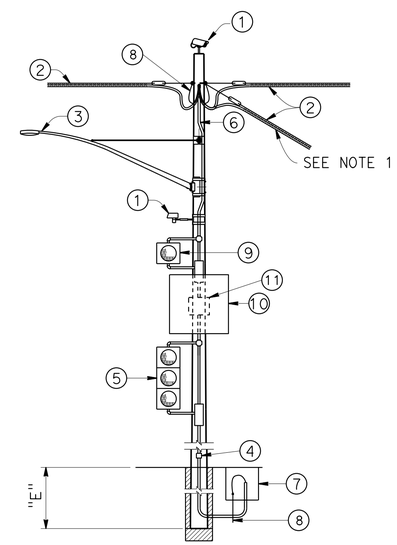

CASE 4N
POLE AT JUNCTION WITH ATTACHMENTS
SEE NOTE 2

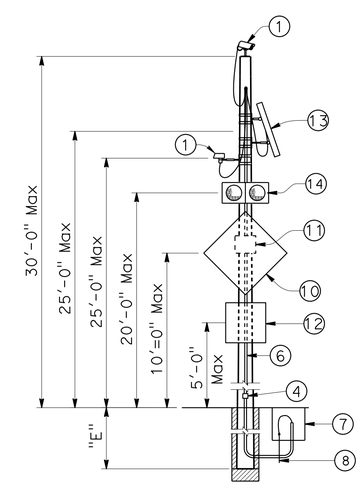

CASE 5N
POLE WITHOUT OVERHEAD BUNDLE WITH ATTACHMENTS

TRAFFIC HANDLING DETAILS

SCALE: 1" = 50′

THD-2

REVISED BY | DATE REVISED
ROB STINGER | LORI EWENS
CALCULATED-DESIGNED BY | CHECKED BY
FUNCTIONAL SUPERVISOR: STEVE TOPAL
STATE OF CALIFORNIA - DEPARTMENT OF TRANSPORTATION
Caltrans DESIGN

P:\proj1\02\4E650_plans\pse\24e650me002.dgn

LAST REVISION | DATE PLOTTED => 22-AUG-2016 | TIME PLOTTED => 15:21

Dist	COUNTY	ROUTE	POST MILES TOTAL PROJECT	SHEET No.	TOTAL SHEETS
02	Sis	96	R52.5/88.4	39	208

REGISTERED CIVIL ENGINEER 06-12-16 DATE

06-15-16
PLANS APPROVAL DATE

REGISTERED PROFESSIONAL ENGINEER ROBERT F. STINGER, Jr. No. C47883 Exp. 12-31-17 CIVIL STATE OF CALIFORNIA

THE STATE OF CALIFORNIA OR ITS OFFICERS OR AGENTS SHALL NOT BE RESPONSIBLE FOR THE ACCURACY OR COMPLETENESS OF SCANNED COPIES OF THIS PLAN SHEET.

LEGEND

A — Wood Pole with Attachments

—OH··— Overhead Bundle

——→ Guy Anchor

POLE SELECTION TABLE

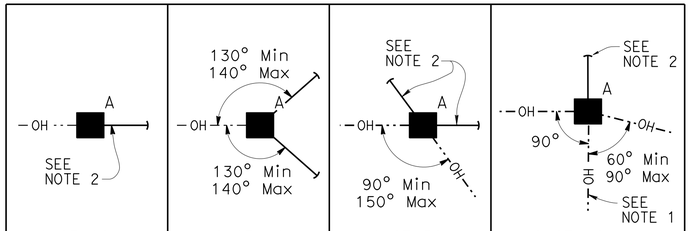

OVERHEAD BUNDLE HORIZONTAL SPAN (Max)	MAXIMUM d_p	CASE 1G				CASE 2G				CASE 3G				CASE 4G			
		1"	1.5"	2.0"	2.5"	1"	1.5"	2.0"	2.5"	1"	1.5"	2.0"	2.5"	1"	1.5"	2.0"	2.5"
50′	MINIMUM POLE CLASS	H-1	H-1	H-2	H-2	1	1	1	1	1	1	1	H-1	H-2	H-2	H-3	H-3
	POLE EMBEDMENT (E)	10′				9′				9′				11′			
100′	MINIMUM POLE CLASS	H-2	H-2	H-3	H-4	1	H-1	H-1	H-1	1	H-1	H-2	H-2	H-3	H-3	H-4	H-4
	POLE EMBEDMENT (E)	11′				9′				9′				12′			
150′	MINIMUM POLE CLASS	H-3	H-3	H-4	H-5	H-1	H-1	H-2	H-2	H-2	H-3	H-3	H-3	H-4	H-5	H-5	H-6
	POLE EMBEDMENT (E)	11′				9′				9′				12′			
200′	MINIMUM POLE CLASS	H-4	H-4	H-5	H-6	H-1	H-2	H-3	H-3	H-3	H-3	H-4	H-4	H-5	H-6		
	POLE EMBEDMENT (E)	11′				9′				9′				12′			

1. CCTV camera assembly or vehicle detection system
2. Overhead bundle consisting of a ⅜" ø messenger wire, overhead conductors, and lashing wire
3. Luminaire with mast arm
4. Pedestrian push button assembly or accessible push button assembly
5. Signal face with 3 indications or single sheet sign panel (10 SQFT Max)
6. Riser with weather head as required
7. Pull box as required
8. Grounding as required
9. Single flashing beacon or single sheet sign panel (4 SQFT Max)
10. Single sheet sign panel (4′ x 4′ Max) or signal face with 3 indications
11. Flashing beacon control assembly
12. ½" ø guy wire with white guy marker and strain insulator (for anchorage see "TEMPORARY WOOD POLES-DETAILS No. 2" sheet)

NOTES:

1. In addition to other restrictions on maximum horizontal span, this horizontal span must not exceed 100′.
2. Guy wire in line with opposing span ± 5°.

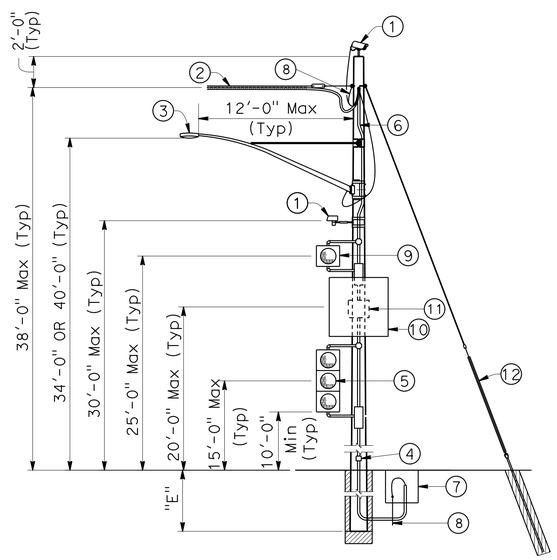

CASE 1G
POLE AT DEAD END
WITH ATTACHMENTS

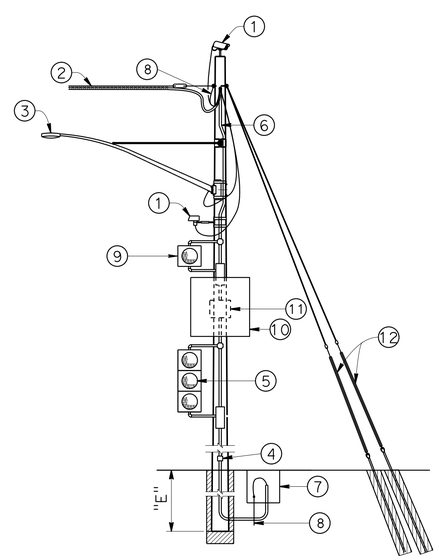

CASE 2G
POLE AT DEAD END
WITH ATTACHMENTS

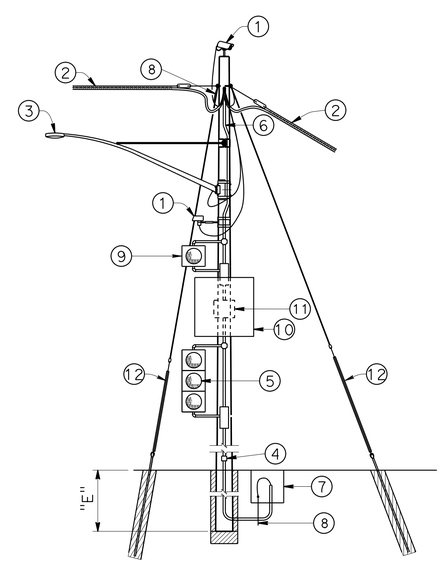

CASE 3G
POLE AT CORNER
WITH ATTACHMENTS

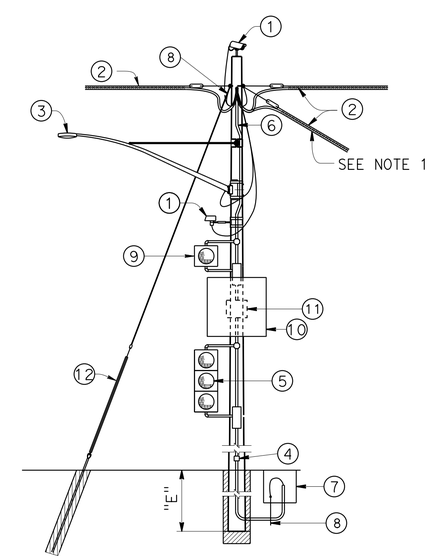

CASE 4G
POLE AT JUNCTION
WITH ATTACHMENTS

TRAFFIC HANDLING DETAILS

NO SCALE

THD-3

REVISED BY	DATE REVISED
ROB STINGER	LORI EWENS

CALCULATED-DESIGNED BY — CHECKED BY

FUNCTIONAL SUPERVISOR — STEVE TOPAL

STATE OF CALIFORNIA - DEPARTMENT OF TRANSPORTATION — Caltrans — DESIGN

P:\proj1\02\4E650_plans\pse\24e650me003.dgn

DATE PLOTTED => 22-AUG-2016
TIME PLOTTED => 15:21

LAST REVISION

Dist	COUNTY	ROUTE	POST MILES TOTAL PROJECT	SHEET No.	TOTAL SHEETS
02	Sis	96	R52.5/88.4	40	208

REGISTERED CIVIL ENGINEER 06-12-16 DATE

PLANS APPROVAL DATE 06-15-16

REGISTERED PROFESSIONAL ENGINEER ROBERT F. STINGER, Jr. No. C47883 Exp. 12-31-17 CIVIL STATE OF CALIFORNIA

THE STATE OF CALIFORNIA OR ITS OFFICERS OR AGENTS SHALL NOT BE RESPONSIBLE FOR THE ACCURACY OR COMPLETENESS OF SCANNED COPIES OF THIS PLAN SHEET.

LEGEND

- A — Wood Pole with Attachments
- —TS— Overhead Bundle with Signal Faces (See Note 2)
- —OH— Overhead Bundle
- Guy Anchor

POLE SELECTION TABLE

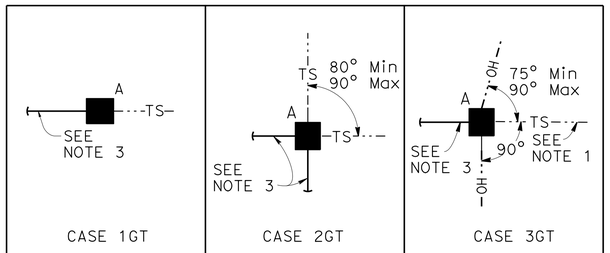

			CASE 1GT			CASE 2GT			CASE 3GT		
		MAXIMUM dp	1"	1.5"	2.0"	1"	1.5"	2.0"	1"	1.5"	2.0"
OVERHEAD BUNDLE HORIZONTAL SPAN Max	50'	MINIMUM POLE CLASS	H-2	H-3	H-3	H-2	H-2	H-2	H-3	H-4	H-4
		POLE EMBEDMENT (E)	10'			10'			11'		
	100'	MINIMUM POLE CLASS	H-3	H-3	H-4	H-2	H-3	H-3	H-4	H-4	H-5
		POLE EMBEDMENT (E)	11'			10'			11'		
	150'	MINIMUM POLE CLASS	H-3	H-4	H-4	H-2	H-3	H-4	H-4	H-5	H-5
		POLE EMBEDMENT (E)	11'			10'			11'		

NOTES:

1. In addition to other restrictions on maximum horizontal span, this horizontal span must not exceed 100'.
2. Maximum of 2 SIGNAL FACES per span within the hatched regions indicated by "LOCATION OF SIGNAL FACES".
3. Guy wire in line with opposing span ± 5°.

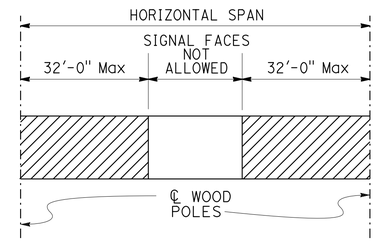

LOCATION OF SIGNAL FACES

1. CCTV camera assembly or vehicle detection system
2. Overhead bundle consisting of ⅜" Ø messenger wire and overhead conductors and lashing wire
3. Luminaire with mast arm
4. Pedestrian push button assembly or accessible push button assembly
5. Signal face with 3 indications or single sheet sign panel (10 SQFT Max)
6. Riser with weather head as required
7. Pull box as required
8. Grounding as required
9. ⅜" Ø tether wire
10. ½" Ø guy wire with white guy marker and strain insulator. For anchorage see "TEMPORARY WOOD POLES-DETAILS No. 2" sheet
11. Pedestrian signal head

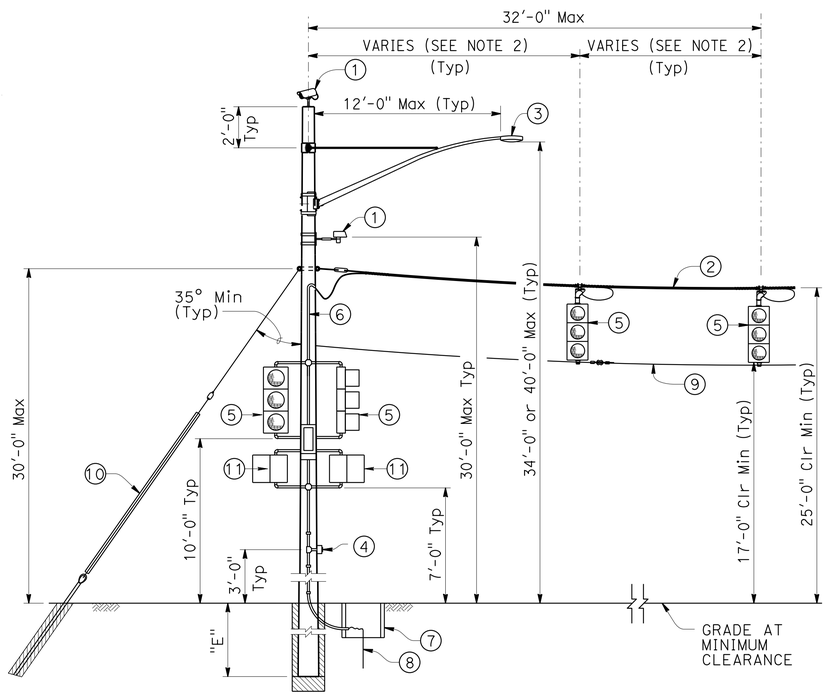

CASE 1GT
POLE AT DEAD END WITH ATTACHMENTS

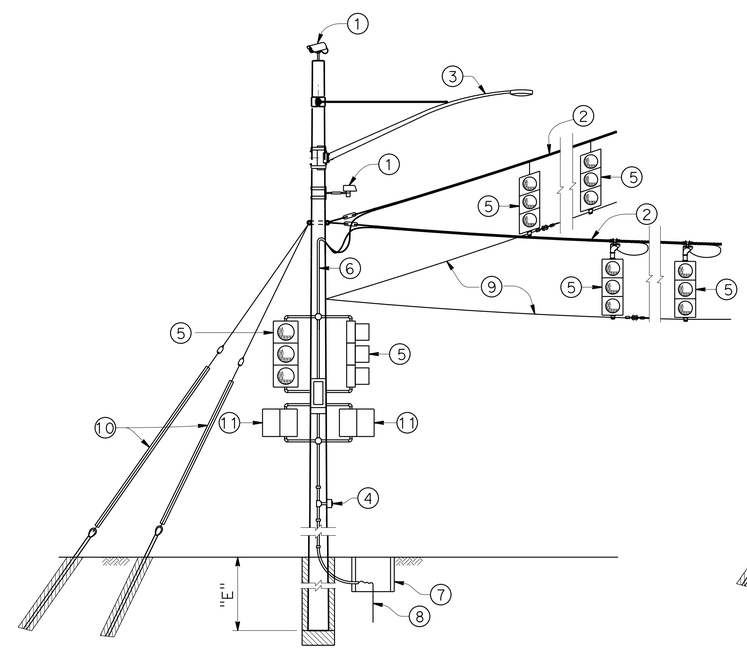

CASE 2GT
POLE AT CORNER WITH ATTACHMENTS

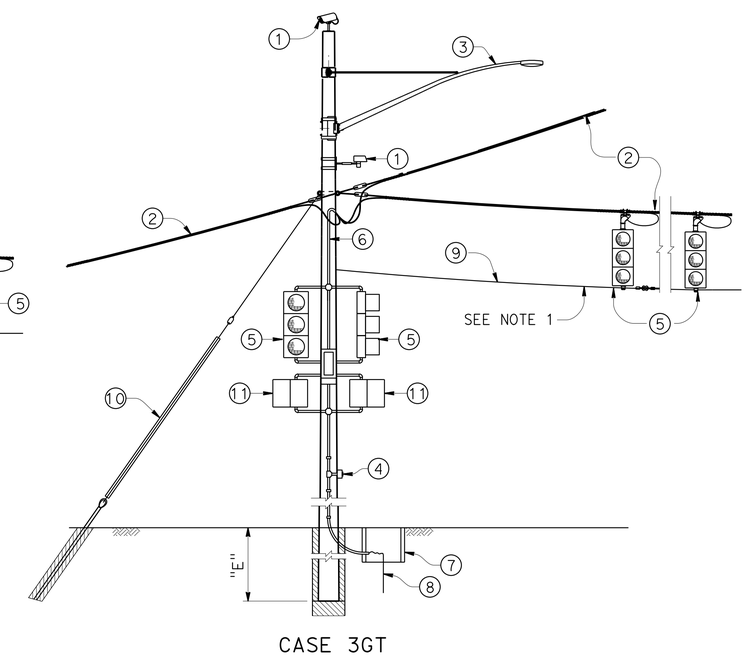

CASE 3GT
POLE AT JUNCTION WITH ATTACHMENTS

TRAFFIC HANDLING DETAILS

NO SCALE

THD-4

STATE OF CALIFORNIA - DEPARTMENT OF TRANSPORTATION
Caltrans DESIGN
FUNCTIONAL SUPERVISOR: STEVE TOPAL
CALCULATED-DESIGNED BY: ROB STINGER
CHECKED BY: LORI EWENS
REVISED BY / DATE REVISED
P:\proj1\02\4E650_plans\pse\24e650me004.dgn
DATE PLOTTED => 22-AUG-2016
TIME PLOTTED => 15:21
LAST REVISION

Dist	COUNTY	ROUTE	POST MILES TOTAL PROJECT	SHEET No.	TOTAL SHEETS
02	Sis	96	R52.5/88.4	41	208

REGISTERED CIVIL ENGINEER 06-12-16 DATE

06-15-16
PLANS APPROVAL DATE

REGISTERED PROFESSIONAL ENGINEER ROBERT F. STINGER, Jr. No. C47883 Exp. 12-31-17 CIVIL STATE OF CALIFORNIA

THE STATE OF CALIFORNIA OR ITS OFFICERS OR AGENTS SHALL NOT BE RESPONSIBLE FOR THE ACCURACY OR COMPLETENESS OF SCANNED COPIES OF THIS PLAN SHEET.

LEGEND

A — Wood Pole with Attachments

—··TS—··— Overhead Bundle with Signal Faces (See Note 1)

POLE SELECTION TABLE

A —··TS—··—

			CASE 1NT		
OVERHEAD BUNDLE HORIZONTAL SPAN (Max)	75'	MAXIMUM d_p	1"	1.5"	2.0"
		MINIMUM POLE CLASS	H-5	H-6	H-6
		POLE EMBEDMENT (E)	13'		

LEGEND:

1. CCTV CAMERA ASSEMBLY OR VEHICLE DETECTION SYSTEM
2. Overhead bundle consisting of a ⅜" ø messenger wire and overhead conductors and lashing wire
3. Luminaire with mast arm
4. Pedestrian push button assembly or accessible push button assembly
5. Signal face with 3 indications or single sheet sign panel (10 SQFT Max)
6. Riser with weather head as required
7. Pull box as required
8. Grounding as required
9. ⅜" ø tether wire
10. PEDESTRIAN SIGNAL HEAD

NOTES:

1. MAXIMUM OF 2 SIGNAL FACES PER SPAN WITHIN THE HATCHED REGIONS INDICATED BY "LOCATION OF SIGNAL FACES".

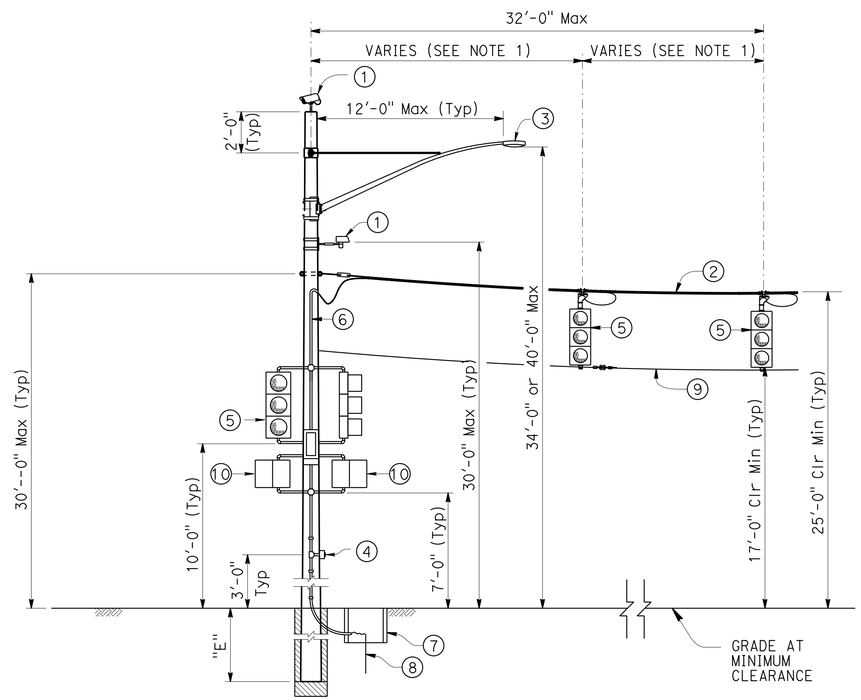

CASE 1NT
POLE AT DEAD END WITH ATTACHMENTS

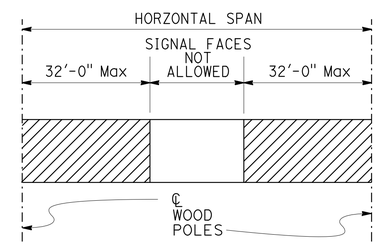

LOCATION OF SIGNAL FACES

TRAFFIC HANDLING DETAILS

NO SCALE

THP-5

REVISED BY | DATE REVISED
ROB STINGER | LORI EWENS
CALCULATED-DESIGNED BY | CHECKED BY
FUNCTIONAL SUPERVISOR: STEVE TOPAL

STATE OF CALIFORNIA - DEPARTMENT OF TRANSPORTATION
Caltrans DESIGN

P:\proj\02\4E650_plans\pse\24e650me005.dgn

LAST REVISION | DATE PLOTTED => 22-AUG-2016 | TIME PLOTTED => 15:21

Dist	COUNTY	ROUTE	POST MILES TOTAL PROJECT	SHEET No.	TOTAL SHEETS
02	Sis	96	R52.5/88.4	42	208

REGISTERED CIVIL ENGINEER 06-12-16 DATE

06-15-16
PLANS APPROVAL DATE

REGISTERED PROFESSIONAL ENGINEER ROBERT F. STINGER, Jr. No. C47883 Exp. 12-31-17 CIVIL STATE OF CALIFORNIA

THE STATE OF CALIFORNIA OR ITS OFFICERS OR AGENTS SHALL NOT BE RESPONSIBLE FOR THE ACCURACY OR COMPLETENESS OF SCANNED COPIES OF THIS PLAN SHEET.

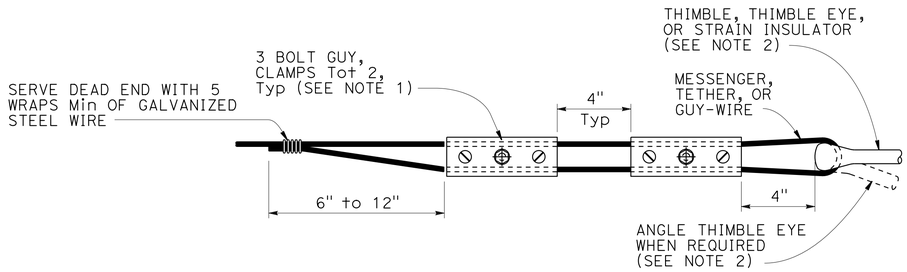

ALTERNATIVE TERMINATION OF MESSENGER WIRES USING GUY CLAMPS

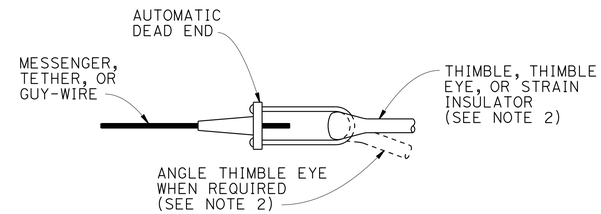

TERMINATION OF WIRES USING AUTOMATIC DEAD END

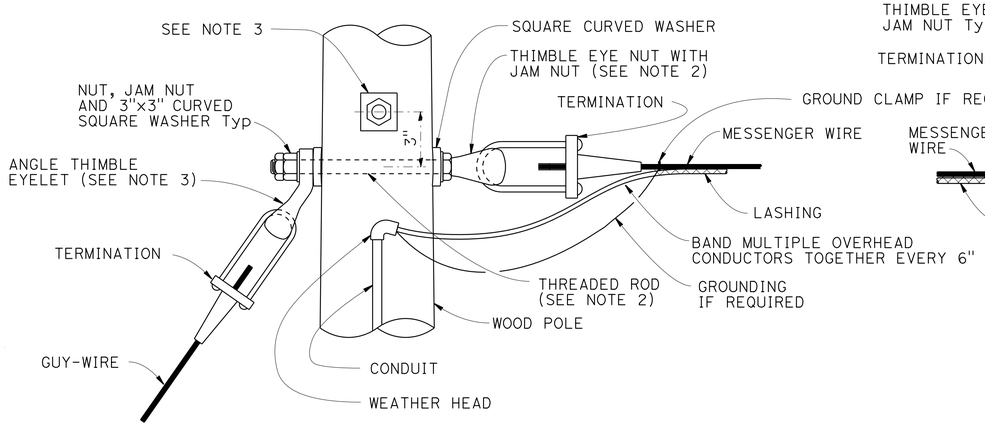

POLE AT DEAD END WITH GUY-WIRE CONNECTION

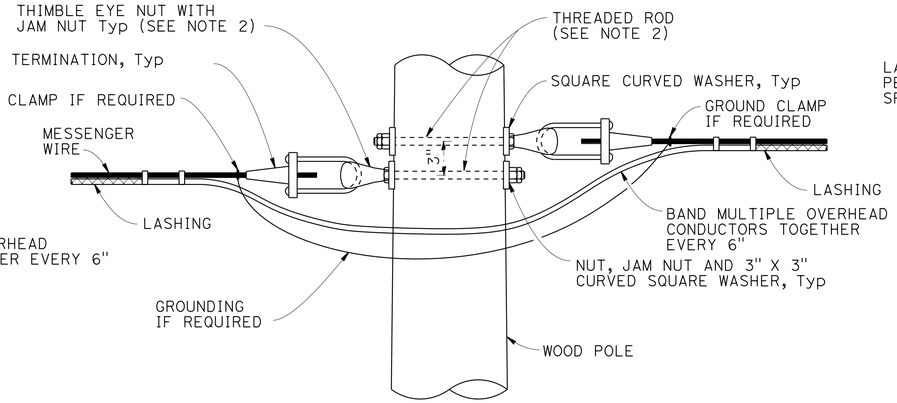

POLE AT TANGENT OR CORNER CONNECTION

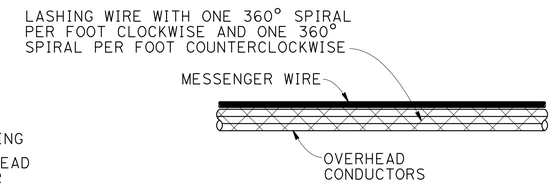

DOUBLE LASHING DETAIL

USE IF d_p IS GREATER THAN 1½"

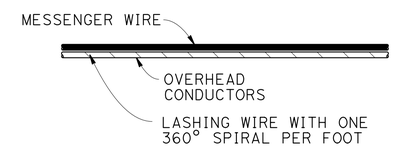

TYPICAL LASHING DETAIL

USE IF d_p IS 1½" OR LESS

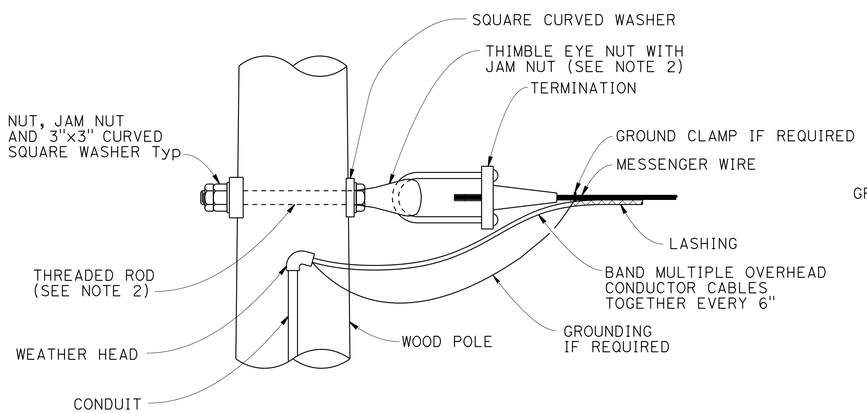

POLE AT DEAD END CONNECTION

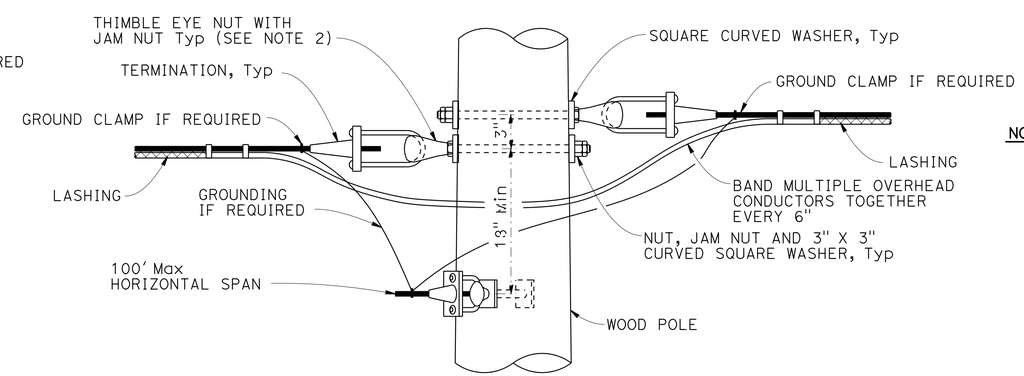

POLE AT JUNCTION CONNECTION

NOTES:

1. For guy wires use 3 clamps.
2. Use ⅝" ø except ¾" ø at guyed wires
3. Install additional angle thimble eyelet at poles with two guy wires.

TRAFFIC HANDLING DETAILS

NO SCALE

THD-6

REVISED BY	DATE REVISED
ROB STINGER	LORI EWENS
CALCULATED-DESIGNED BY	CHECKED BY
FUNCTIONAL SUPERVISOR	STEVE TOPAL

STATE OF CALIFORNIA - DEPARTMENT OF TRANSPORTATION
Caltrans® DESIGN

P:\proj1\02\4E650_plans\pse\24e650me006.dgn

LAST REVISION | DATE PLOTTED => 22-AUG-2016 | TIME PLOTTED => 15:21

Dist	COUNTY	ROUTE	POST MILES TOTAL PROJECT	SHEET No.	TOTAL SHEETS
02	Sis	96	R52.5/88.4	43	208

REGISTERED CIVIL ENGINEER 06-12-16 DATE

PLANS APPROVAL DATE 06-15-16

REGISTERED PROFESSIONAL ENGINEER ROBERT F. STINGER, Jr. No. C47883 Exp. 12-31-17 CIVIL STATE OF CALIFORNIA

THE STATE OF CALIFORNIA OR ITS OFFICERS OR AGENTS SHALL NOT BE RESPONSIBLE FOR THE ACCURACY OR COMPLETENESS OF SCANNED COPIES OF THIS PLAN SHEET.

NOTE:

1. For minimum allowable tension capacity of anchors see "Temporary Wood Poles - General Notes" sheet.

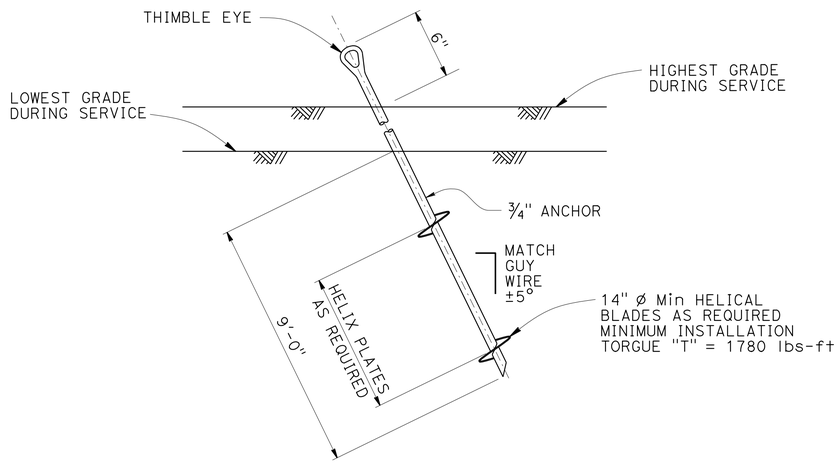

HELICAL ANCHOR DETAIL

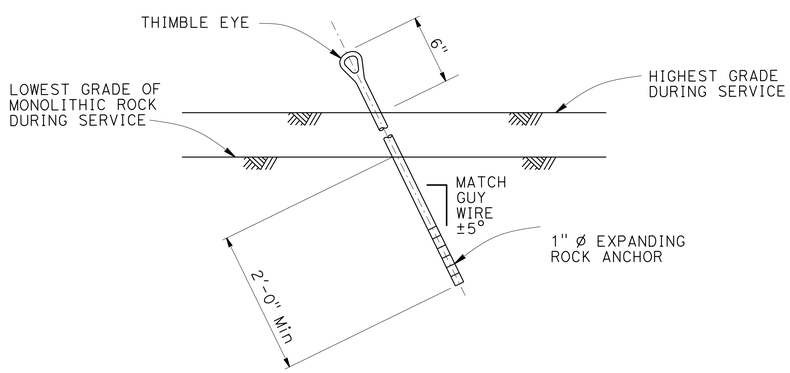

EXPANDING ROCK ANCHOR DETAIL

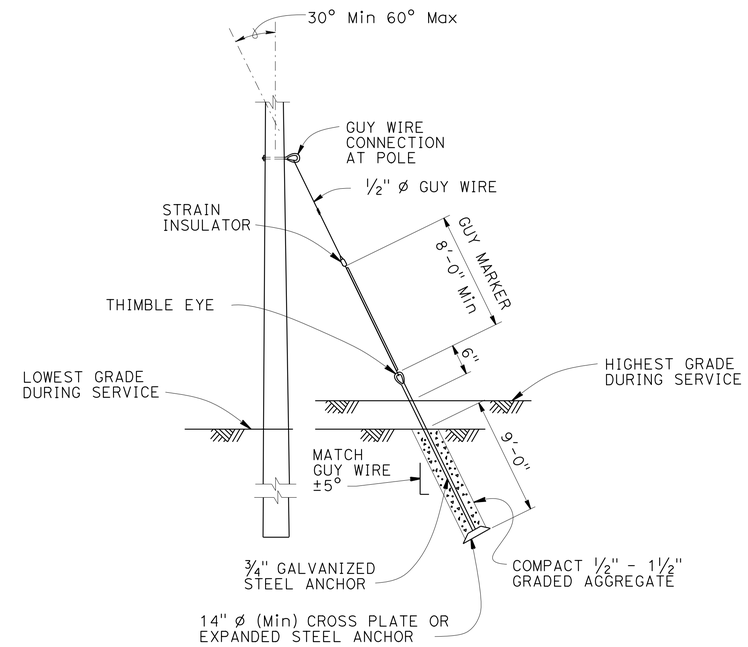

NOTE:

HELICAL ANCHOR DETAIL MAY BE USED IN PLACE OF EXPANDED STEEL ANCHORS.

EXPANDED STEEL ANCHOR DETAIL

TRAFFIC HANDLING DETAILS

NO SCALE

THD-7

REVISED BY	DATE REVISED
ROB STINGER	LORI EWENS
CALCULATED-DESIGNED BY	CHECKED BY
FUNCTIONAL SUPERVISOR	STEVE TOPAL

STATE OF CALIFORNIA - DEPARTMENT OF TRANSPORTATION

Caltrans DESIGN

P:\proj1\02\4E650_plans\pse\24e650me007.dgn

LAST REVISION DATE PLOTTED => 22-AUG-2016 TIME PLOTTED => 15:21

Dist	COUNTY	ROUTE	POST MILES TOTAL PROJECT	SHEET No.	TOTAL SHEETS
02	Sis	96	R52.5/88.4	44	208

REGISTERED CIVIL ENGINEER 06-12-16 DATE

06-15-16
PLANS APPROVAL DATE

REGISTERED PROFESSIONAL ENGINEER ROBERT F. STINGER, Jr. No. C47883 Exp. 12-31-17 CIVIL STATE OF CALIFORNIA

THE STATE OF CALIFORNIA OR ITS OFFICERS OR AGENTS SHALL NOT BE RESPONSIBLE FOR THE ACCURACY OR COMPLETENESS OF SCANNED COPIES OF THIS PLAN SHEET.

NOTES:

1. Luminaire mast arms must be in compliance with Standard Plan ES-6D with noted modifications.
2. Verify pole dimensions at tie-rod attachment height. Fabricate 8" flat bar with "L" Dimension to maintain an open gap between flanges in finished installation.
3. Not all screw heads and bolt heads are shown for clarity.
4. Mast arm not shown for clarity.

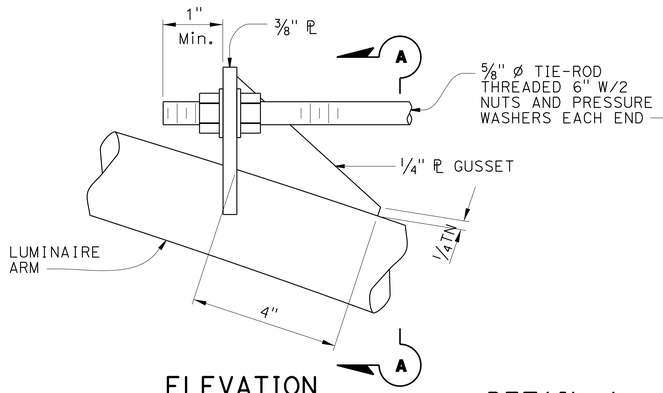

ELEVATION

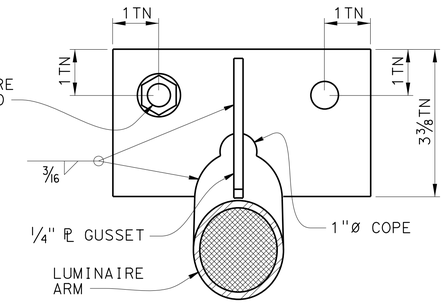

SECTION A-A

DETAIL A
TIE-ROD AT LUMINAIRE ARM

NO SCALE

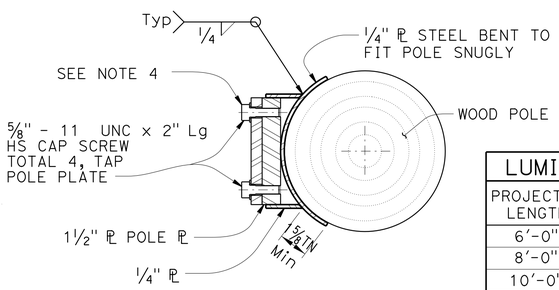

SECTION E-E

LUMINAIRE MAST ARM DATA			
PROJECTED LENGTH	N RISE	Min OD AT POLE	NOMINAL THICKNESS
6'-0"	2'-0"±	3 1/4"	0.1196"
8'-0"	2'-6"±	3 1/2"	
10'-0"	3'-3"±	3 7/8"	
12'-0"	4'-3"±		

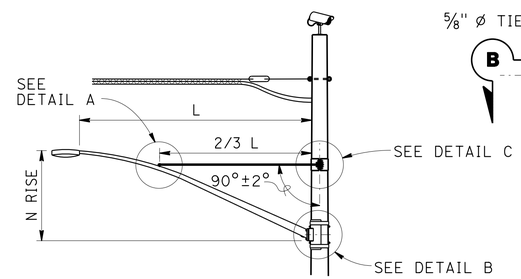

LUMINAIRE MAST ARM

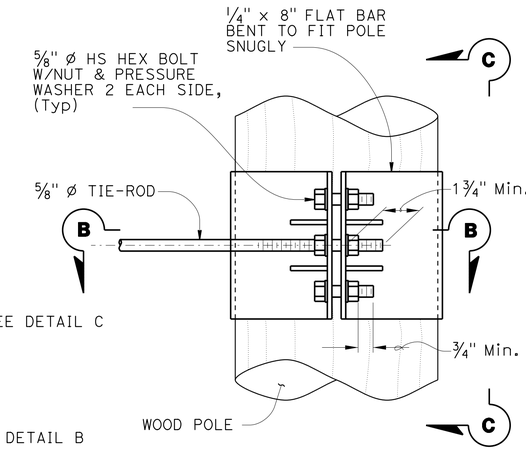

ELEVATION

NOTE:
Not all screw and bolt heads shown for clarity.

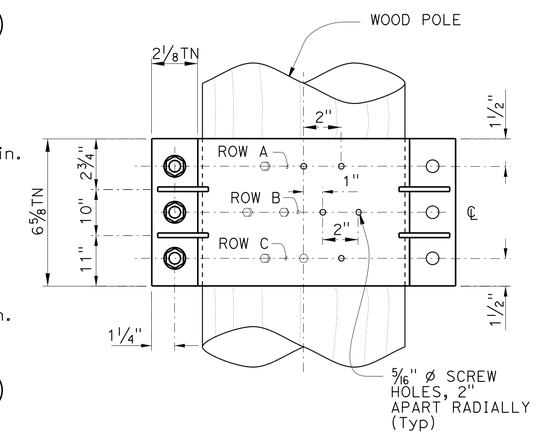

VIEW C-C

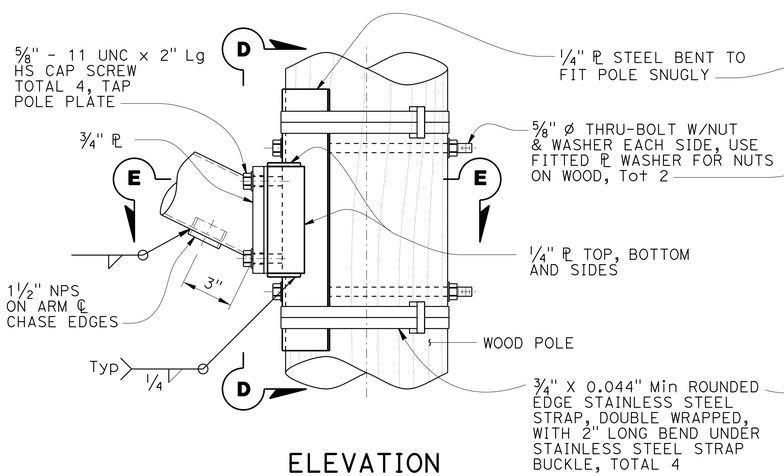

ELEVATION

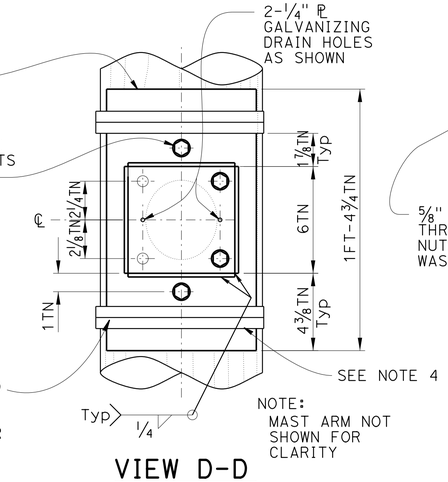

VIEW D-D

DETAIL B
ARM CONNECTION DETAILS

NO SCALE

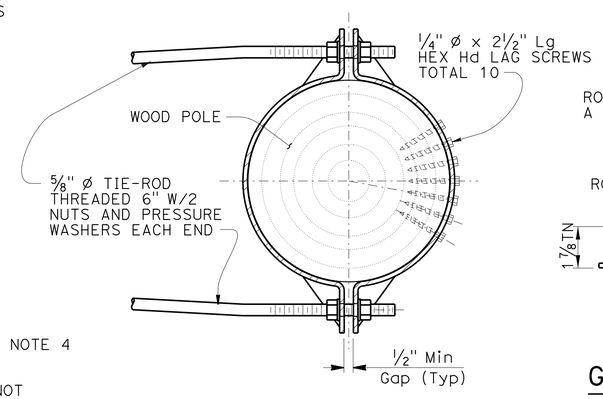

SECTION B-B

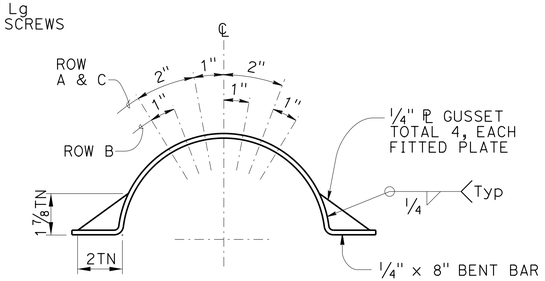

LAG SCREW AND GUSSET PLATE LAYOUT

DETAIL C
TIE-ROD AT POLE

NO SCALE

TRAFFIC HANDLING DETAILS

NO SCALE

THP-8

REVISED BY | DATE REVISED
ROB STINGER | LORI EWENS
CALCULATED-DESIGNED BY | CHECKED BY
FUNCTIONAL SUPERVISOR: STEVE TOPAL

STATE OF CALIFORNIA - DEPARTMENT OF TRANSPORTATION
Caltrans® DESIGN

P:\proj\02\4E650_plans\pse\24e650me008.dgn

DATE PLOTTED => 22-AUG-2016
TIME PLOTTED => 15:21

Dist	COUNTY	ROUTE	POST MILES TOTAL PROJECT	SHEET No.	TOTAL SHEETS
02	Sis	96	R52.5/88.4	45	208

REGISTERED CIVIL ENGINEER 06-12-16 DATE

06-15-16
PLANS APPROVAL DATE

REGISTERED PROFESSIONAL ENGINEER ROBERT F. STINGER, Jr. No. C47883 Exp. 12-31-17 CIVIL STATE OF CALIFORNIA

THE STATE OF CALIFORNIA OR ITS OFFICERS OR AGENTS SHALL NOT BE RESPONSIBLE FOR THE ACCURACY OR COMPLETENESS OF SCANNED COPIES OF THIS PLAN SHEET.

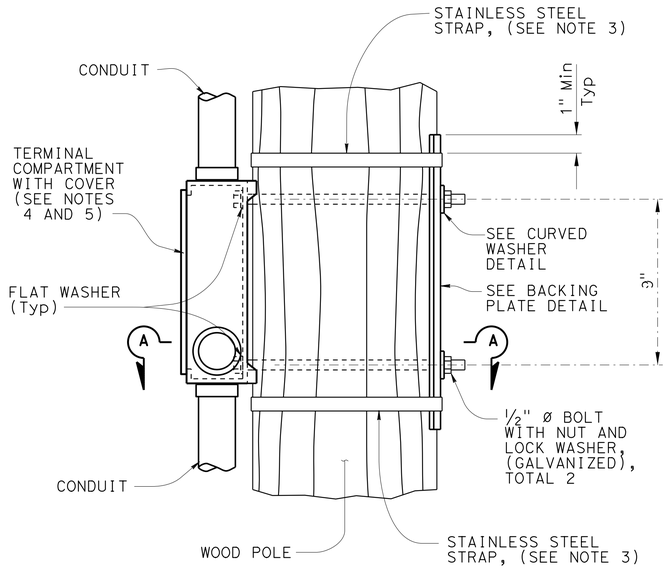

ELEVATION

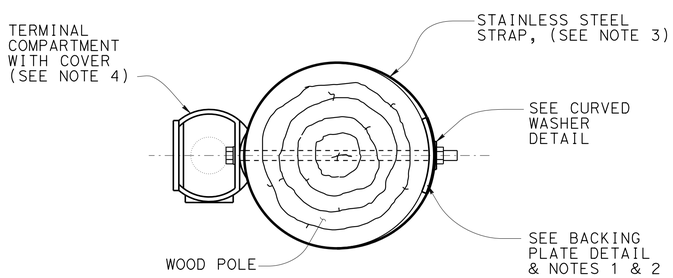

SECTION A-A

NOTES:

1. Verify pole dimensions at terminal compartment for fabrication of backing plate and curved washer.
2. Backing plate to be galvanized after fabrication.
3. ¾" x 0.044" minimum, rounded edge stainless steel straps, double wrapped with 2" long bend under stainless steel strap buckle.
4. For miscellaneous details for signal mounting not shown see Standard Plan ES-4D.
5. If the terminal compartment has a cable entry guide on the rear face, remove the cable entry guide to a level that will not interfere with the wood post. Close any unused cable entry locations with raintight cap.

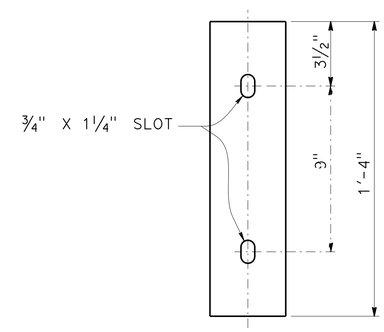

ELEVATION

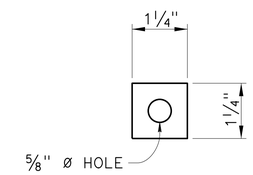

ELEVATION

PLAN

BACKING PLATE DETAIL

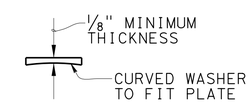

PLAN

CURVED WASHER DETAIL

SIDE MOUNTING
TERMINAL COMPARTMENT

TRAFFIC HANDLING DETAILS
NO SCALE

THD-9

REVISED BY	DATE REVISED
ROB STINGER	LORI EWENS

CALCULATED-DESIGNED BY	CHECKED BY

FUNCTIONAL SUPERVISOR: STEVE TOPAL

STATE OF CALIFORNIA - DEPARTMENT OF TRANSPORTATION
Caltrans
DESIGN

P:\proj1\02\4E650_plans\pse\24e650me009.dgn

LAST REVISION DATE PLOTTED => 22-AUG-2016
TIME PLOTTED => 15:21

Dist	COUNTY	ROUTE	POST MILES TOTAL PROJECT	SHEET No.	TOTAL SHEETS
02	Sis	96	R52.5/88.4	46	208

Lori Ewens 06-12-16
REGISTERED CIVIL ENGINEER DATE

06-15-16
PLANS APPROVAL DATE

REGISTERED PROFESSIONAL ENGINEER LORI EWENS No. C43919 Exp. 6-30-17 CIVIL STATE OF CALIFORNIA

THE STATE OF CALIFORNIA OR ITS OFFICERS OR AGENTS SHALL NOT BE RESPONSIBLE FOR THE ACCURACY OR COMPLETENESS OF SCANNED COPIES OF THIS PLAN SHEET.

LEGEND:

COLD PLANE ASPHALT CONCRETE PAVEMENT

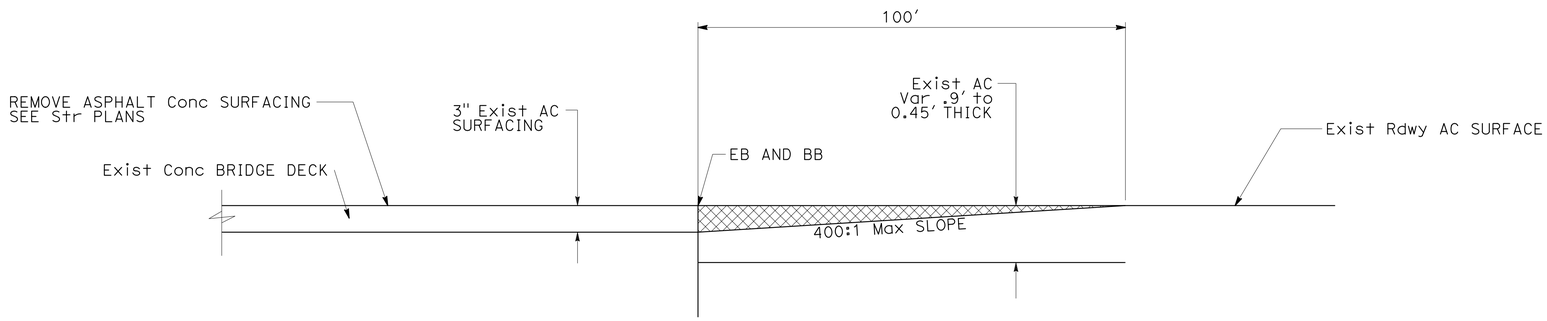

TEMPORARY PAVEMENT TAPER

LOCATION 2 - SEIAD CREEK
"S" 10+28 TO 11+28 (BB) AND 12+83 (EB) TO 13+83

TRAFFIC HANDLING QUANTITIES

LOCATION	TYPE III BARRICADE	TEMPORARY PAVEMENT MARKING (PAINT)	TEMPORARY TRAFFIC STRIPE (PAINT)			TEMPORARY RAILING (TYPE K)	TEMPORARY CRASH CUSHION SYSTEM	REMOVE PAINTED TRAFFIC STRIPE	REMOVE PAVEMENT MARKER	* COLD PLANE ASPHALT CONCRETE PAVEMENT
			DETAIL 21	DETAIL 27B	DETAIL 27C					
	EA	SQFT	LF	LF	LF	LF	EA	LF	EA	SQYD
"T" 10+00 TO 16+50		24	250	811		460	3	400	34	
"S" 8+00 TO 15+50	3	24	375	926		780	1	375	32	
"B" 8+00 TO 16+50		24	350	837	211	600	3	500	42	313
"S" 10+28 TO 11+28 (BB)										323
"S" 12+83 (EB) TO 13+83										
TOTAL	3	72	3760			1840	7	1275	108	636

* INCLUDED IN ROADWAY QUANTITIES TABLE (Q-1)

TRAFFIC HANDLING QUANTITIES

NO SCALE

THQ-1

REVISED BY | DATE REVISED

AUSTIN BUIST | LORI EWENS

CALCULATED-DESIGNED BY | CHECKED BY

FUNCTIONAL SUPERVISOR: STEVE TOPAL

STATE OF CALIFORNIA - DEPARTMENT OF TRANSPORTATION

Caltrans® DESIGN

P:\proj1\02\4E650_plans\pse\24e650mf001.dgn

LAST REVISION 02-23-16 | DATE PLOTTED => 22-AUG-2016 TIME PLOTTED => 15:21

Dist	COUNTY	ROUTE	POST MILES TOTAL PROJECT	SHEET No.	TOTAL SHEETS
02	Sis	96	R52.5/88.4	47	208

Lori Ewens 06-12-16
REGISTERED CIVIL ENGINEER DATE

06-15-16
PLANS APPROVAL DATE

REGISTERED PROFESSIONAL ENGINEER
LORI EWENS
No. C43919
Exp. 6-30-17
CIVIL
STATE OF CALIFORNIA

THE STATE OF CALIFORNIA OR ITS OFFICERS OR AGENTS SHALL NOT BE RESPONSIBLE FOR THE ACCURACY OR COMPLETENESS OF SCANNED COPIES OF THIS PLAN SHEET.

34

NOTE:

1. FEDERAL SIGN CODES ARE SHOWN UNLESS DESIGNATED BY (CA) WHICH INDICATES A CALIFORNIA SIGN CODE.

LEGEND:

- DELINEATOR (TYPE F)
- DELINEATOR (TYPE E)
- OBJECT MARKER (TYPE L-1)
- MILEPOST MARKER
- REMOVE MARKER
- ▲ EXISTING SIGN TO REMAIN
- ■ RELOCATE ROADSIDE SIGN
- ✳ RESET ROADSIDE SIGN
- ● REMOVE ROADSIDE SIGN

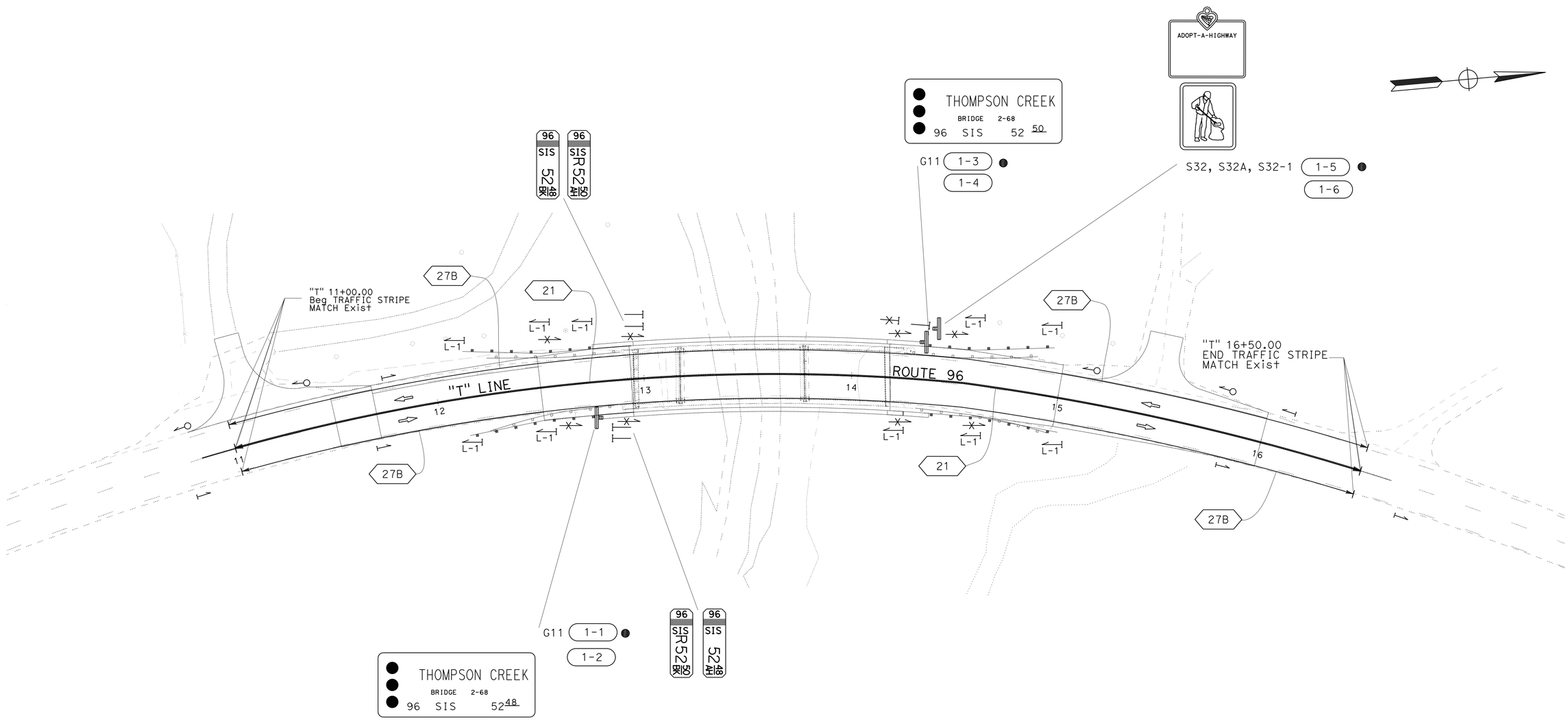

LOCATION 1 - THOMPSON

APPROVED FOR PAVEMENT DELINEATION AND SIGN WORK ONLY

PAVEMENT DELINEATION AND SIGN PLAN

SCALE: 1" = 25'

PD-1

STATE OF CALIFORNIA - DEPARTMENT OF TRANSPORTATION
Caltrans
DESIGN

FUNCTIONAL SUPERVISOR: STEVE TOPAL
CALCULATED-DESIGNED BY: NATHEN RUDD
CHECKED BY: LORI EWENS
REVISED BY
DATE REVISED

P:\proj1\02\4E650_plans\pse\24e650na001.dgn

LAST REVISION
DATE PLOTTED => 22-AUG-2016
TIME PLOTTED => 15:21

Dist	COUNTY	ROUTE	POST MILES TOTAL PROJECT	SHEET No.	TOTAL SHEETS
02	Sis	96	R52.5/88.4	48	208

Lori Ewens 06-12-16
REGISTERED CIVIL ENGINEER DATE

06-15-16
PLANS APPROVAL DATE

REGISTERED PROFESSIONAL ENGINEER
LORI EWENS
No. C43919
Exp. 6-30-17
CIVIL
STATE OF CALIFORNIA

THE STATE OF CALIFORNIA OR ITS OFFICERS OR AGENTS SHALL NOT BE RESPONSIBLE FOR THE ACCURACY OR COMPLETENESS OF SCANNED COPIES OF THIS PLAN SHEET.

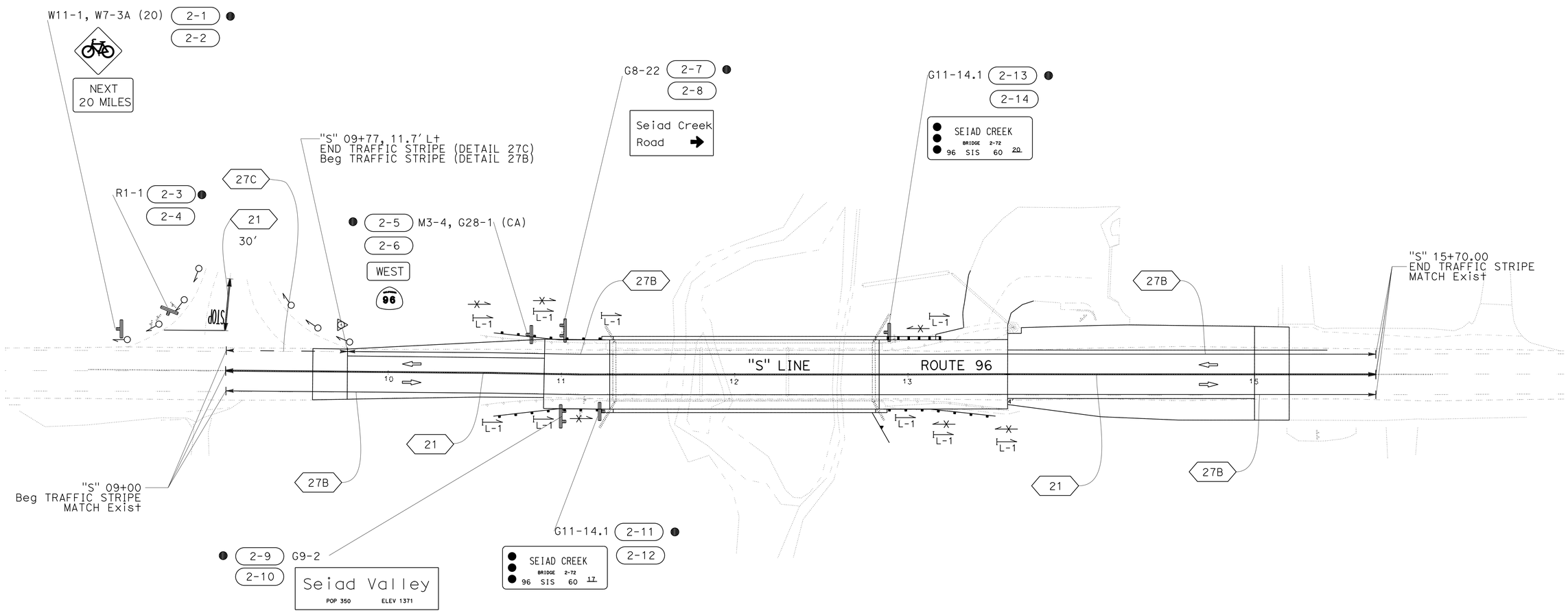

LOCATION 2 - SEIAD

APPROVED FOR PAVEMENT DELINEATION AND SIGN WORK ONLY

PAVEMENT DELINEATION AND SIGN PLAN

SCALE: 1" = 30'

PD-2

REVISED BY	DATE REVISED
NATHEN RUDD	LORI EWENS
CALCULATED-DESIGNED BY	CHECKED BY
FUNCTIONAL SUPERVISOR	STEVE TOPAL

STATE OF CALIFORNIA - DEPARTMENT OF TRANSPORTATION
Caltrans
DESIGN

P:\proj1\02\4E650_plans\pse\24e650na002.dgn

LAST REVISION DATE PLOTTED => 22-AUG-2016
TIME PLOTTED => 15:21

Dist	COUNTY	ROUTE	POST MILES TOTAL PROJECT	SHEET No.	TOTAL SHEETS
02	Sis	96	R52.5/88.4	49	208

Lori Ewens 06-12-16
REGISTERED CIVIL ENGINEER DATE

06-15-16
PLANS APPROVAL DATE

REGISTERED PROFESSIONAL ENGINEER
LORI EWENS
No. C43919
Exp. 6-30-17
CIVIL
STATE OF CALIFORNIA

THE STATE OF CALIFORNIA OR ITS OFFICERS OR AGENTS SHALL NOT BE RESPONSIBLE FOR THE ACCURACY OR COMPLETENESS OF SCANNED COPIES OF THIS PLAN SHEET.

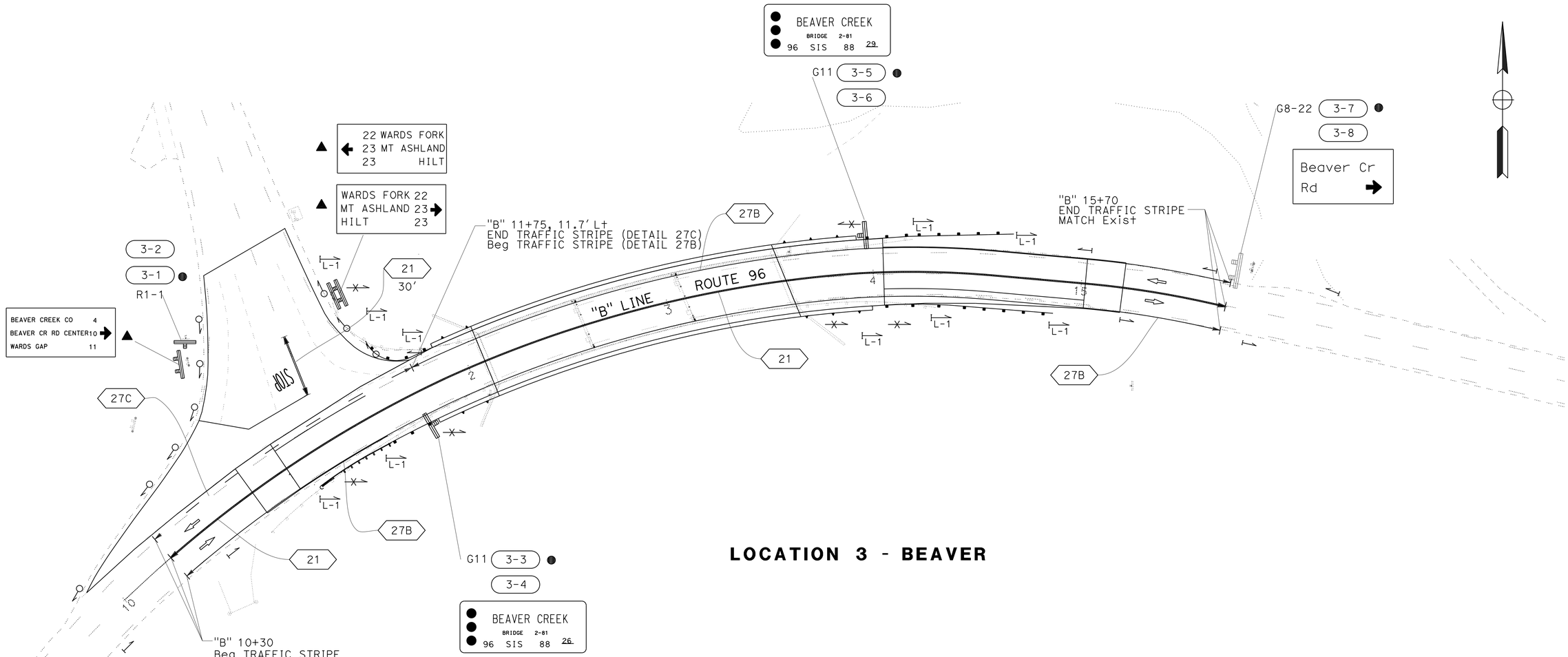

LOCATION 3 - BEAVER

PAVEMENT DELINEATION AND SIGN PLAN

SCALE: 1" = 25'

PD-3

APPROVED FOR PAVEMENT DELINEATION AND SIGN WORK ONLY

REVISED BY	DATE REVISED

CALCULATED-DESIGNED BY	CHECKED BY
NATHAN RUDD	LORI EWENS

FUNCTIONAL SUPERVISOR: STEVE TOPAL

STATE OF CALIFORNIA - DEPARTMENT OF TRANSPORTATION
Caltrans
DESIGN

P:\proj1\02\4E650_plans\pse\24e650na003.dgn

LAST REVISION | DATE PLOTTED => 22-AUG-2016 | TIME PLOTTED => 15:21

Dist	COUNTY	ROUTE	POST MILES TOTAL PROJECT	SHEET No.	TOTAL SHEETS
02	Sis	96	R52.5/88.4	50	208

Lori Ewens 06-12-16
REGISTERED CIVIL ENGINEER DATE

06-15-16
PLANS APPROVAL DATE

REGISTERED PROFESSIONAL ENGINEER LORI EWENS No. C43919 Exp. 6-30-17 CIVIL STATE OF CALIFORNIA

THE STATE OF CALIFORNIA OR ITS OFFICERS OR AGENTS SHALL NOT BE RESPONSIBLE FOR THE ACCURACY OR COMPLETENESS OF SCANNED COPIES OF THIS PLAN SHEET.

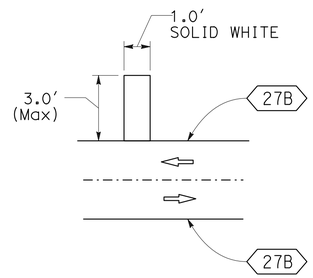

HALF MILE PAVEMENT MARKING

LOCATION 1 -THOMPSON CREEK PM 52.5

MILEPOST MARKERS

SHEET No.	LOCATION	PM	Qty EA
PD-1	"T" 12+90 Rt	R52.50 BK R52.48 AH	2
	"T" 12+90 Lt	R52.48 BK R52.50 AH	2
		TOTAL	4

THERMOPLASTIC TRAFFIC STRIPE (SPRAYABLE)

SHEET No.	LOCATION	DETAIL 21 LF	DETAIL 27B LF	DETAIL 27C LF
PD-1	"T" 11+00 TO 16+50	550	1100	
PD-2	"S" 9+00 TO 15+70	700	1263	77
PD-3	"B" 10+30 TO 15+70	570	935	145
	SUBTOTAL	1820	3298	222
	TOTAL		5340	

DELINEATORS AND MARKERS

SHEET No.	LOCATION	REMOVE MARKER EA	DELINEATOR (CLASS 2) TYPE E EA	DELINEATOR (CLASS 2) TYPE F EA	OBJECT MARKER (TYPE L-1) EA
PD-1	"TD1"		2		
	"TD2"		2		
	"T" 11+00 TO 16+50	8		6	10
PD-2	SEIAD Cr Rd CONNECTION		7		
	"S" 10+00 TO 14+00	6			9
PD-3	BEAVER Cr Rd CONNECTION		9		
	"B" 10+00 TO 16+00	5		8	10
	SUBTOTAL	19	20	14	29
	TOTAL	19	34		29

THERMOPLASTIC PAVEMENT MARKING

SHEET No.	LOCATION	DESCRIPTION	Qty SQFT
PD-1	"T" 14+25 Lt	HALF MILE Pvmt MARKING	3
PD-2	"S" 9+00 Lt	"STOP" MARKING	22
	"S" 8+70 TO 9+06 Lt	LIMIT LINE	36
PD-3	"B" 11+15 Lt	"STOP" MARKING	22
	"B" 10+80 TO 11.27 Lt	LIMIT LINE	57
		TOTAL	140

PAVEMENT DELINEATION QUANTITIES

PDQ-1

REVISED BY | DATE REVISED
AUSTIN BUIST | LORI EWENS
CALCULATED-DESIGNED BY | CHECKED BY
FUNCTIONAL SUPERVISOR | STEVE TOPAL
STATE OF CALIFORNIA - DEPARTMENT OF TRANSPORTATION
Caltrans® DESIGN
P:\proj1\02\4E650_plans\pse\24e650nc001.dgn

LAST REVISION | DATE PLOTTED => 22-AUG-2016 | TIME PLOTTED => 15:21

Dist	COUNTY	ROUTE	POST MILES TOTAL PROJECT	SHEET No.	TOTAL SHEETS
02	Sis	96	R52.5/88.4	51	208

Frank J. Rivas 06-12-16
REGISTERED CIVIL ENGINEER DATE

06-15-16
PLANS APPROVAL DATE

REGISTERED PROFESSIONAL ENGINEER
FRANK RIVAS
No. C53592
Exp. 6/30/17
CIVIL
STATE OF CALIFORNIA

THE STATE OF CALIFORNIA OR ITS OFFICERS OR AGENTS SHALL NOT BE RESPONSIBLE FOR THE ACCURACY OR COMPLETENESS OF SCANNED COPIES OF THIS PLAN SHEET.

NOTES:

1. USE A 2¼" Sq TUBE x 30" LONG, 3/16" THICK ANCHOR FOR 2" POSTS.
   USE A 3" Sq TUBE x 3' LONG, 3/16" THICK ANCHOR FOR 2-1/2 " POSTS.
2. USE A 5/16" CORNER BOLT OR TWO DRIVE RIVETS TO FASTEN ASSEMBLED SIGN AND POST INTO ANCHOR. INSTALL CORNER BOLT OR DRIVE RIVETS INTO THE SIDES FACING TRAFFIC.
3. REMOVE EXISTING AC OR PCC, DRIVE ANCHOR SLEEVE INTO SOIL AND RECAP WITH LIKE MATERIAL, MATCHING EXISTING THICKNESS.
4. 2" POSTS ARE TO BE 1/8" THICK, PERFORATIONS OF 7/16" IN DIAMETER ARE 1" ON CENTER ON ALL SIDES, LENGTHS ARE 10' AND 12'.
5. 2-1/2" POSTS ARE TO BE 1/8" THICK, PERFORATIONS OF 7/16" IN DIAMETER ARE 1" ON CENTER ON ALL SIDES, 2-1/2" POSTS ARE 12' AND 14' IN LENGTH.
6. FOR DETAILS NOT SHOWN, REFER TO THE STANDARD PLANS.
7. 2-1/2" POSTS SHALL BE USED IN SIDEWALK AND HIGH PEDESTRIAN USE PLACEMENTS.
8. ALL ANCHOR SLEEVES SHALL BE EMBEDDED IN PCC, EXCEPT FOR INSTALLATIONS IN PAVEMENTS OR SIDEWALKS.

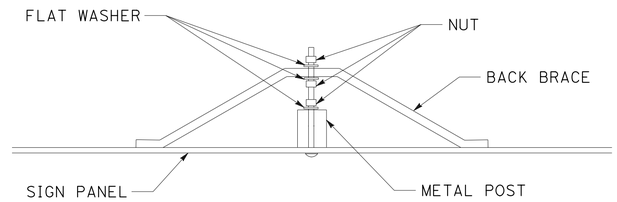

BACK BRACE MOUNTING DETAIL

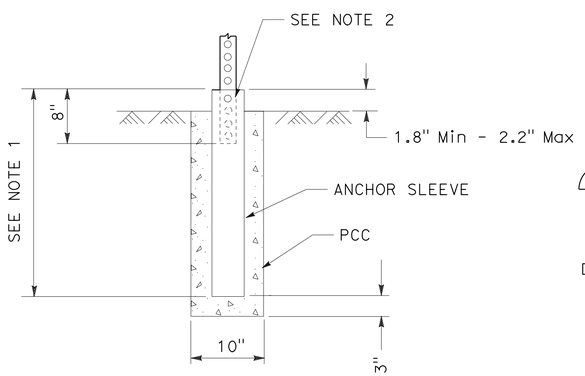

INSTALLATION IN SOIL (PCC)
(SEE NOTE 8)

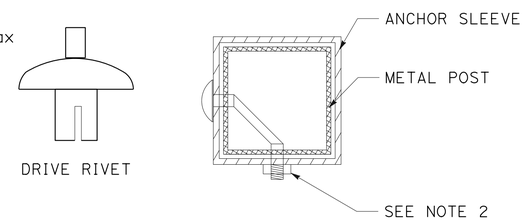

FASTENER DETAILS

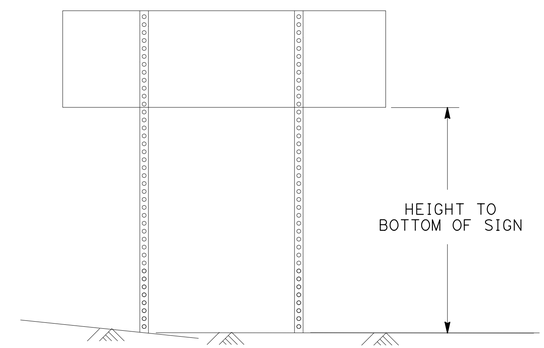

TWO POSTS INSTALLATION
(POST SIZE, SEE CHART BELOW)

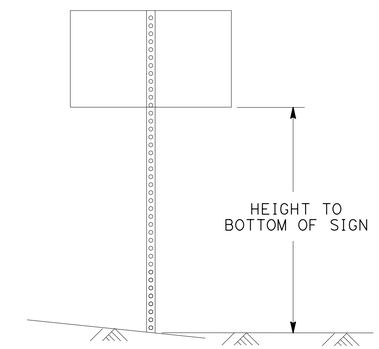

SINGLE POST INSTALLATION
(POST SIZE, SEE CHART BELOW)

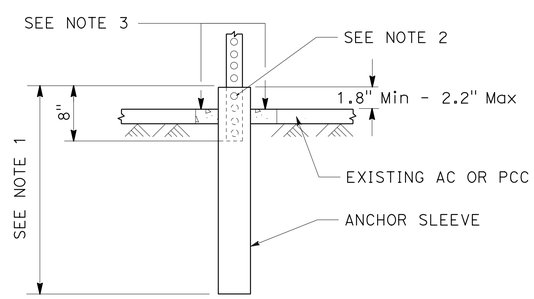

INSTALLATION IN EXISTING AC OR PCC

Max Sq Ft OF SIGN

POST SIZE	60"	72"	84"	96"	108"	120"
2"	18	16	14	12	10	8
2.5"	35	32	28	24	21	21

HEIGHT TO BOTTOM OF SIGN
DOUBLE POST GROUND SIGNS
70 MPH WIND SPEED

Max Sq Ft OF SIGN

POST SIZE	60"	72"	84"	96"	108"	120"
2"	10.5	10	8.7	7.4	6.2	5
2.5"	16	16	16	16	12	12

HEIGHT TO BOTTOM OF SIGN
SINGLE POST GROUND SIGNS
70 MPH WIND SPEED

METAL SIGN POST DETAIL

METAL SIGN POST INSTALLATION DETAILS

SIGN DETAILS

NO SCALE

SD-1

REVISED BY	DATE REVISED

FRANK RIVAS — CALCULATED-DESIGNED BY
DAN FISHER — CHECKED BY
ROB STINGER — FUNCTIONAL SUPERVISOR

STATE OF CALIFORNIA - DEPARTMENT OF TRANSPORTATION
Caltrans TRAFFIC OPS

P:\proj1\02\4E650_plans\pse\24e650ob001.dgn

LAST REVISION 05-01-16 | DATE PLOTTED => 22-AUG-2016 | TIME PLOTTED => 15:21

Dist	COUNTY	ROUTE	POST MILES TOTAL PROJECT	SHEET No.	TOTAL SHEETS
02	Sis	96	R52.5/88.4	52	208

Frank J. Rivas 06-12-16
REGISTERED CIVIL ENGINEER DATE

06-15-16
PLANS APPROVAL DATE

REGISTERED PROFESSIONAL ENGINEER FRANK RIVAS No. C53592 Exp. 6/30/17 CIVIL STATE OF CALIFORNIA

THE STATE OF CALIFORNIA OR ITS OFFICERS OR AGENTS SHALL NOT BE RESPONSIBLE FOR THE ACCURACY OR COMPLETENESS OF SCANNED COPIES OF THIS PLAN SHEET.

NOTE:
1. ALL DIMENSIONS SHOWN IN INCHES.
2. CALIFORNIA SIGN CODES DESIGNATED BY (Ca), OTHERWISE FEDERAL SIGN CODES SHOWN.

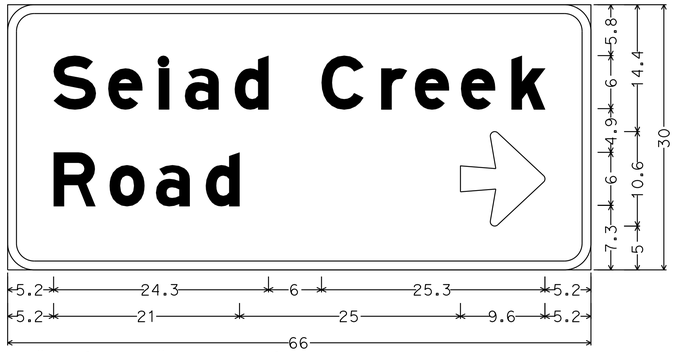

3.0" Radius, 1.0" Border, White on Green;
[Seiad Creek] E Mod; [Road] E Mod; Arrow 6UC-2LH - 9.6" 0°;

2-8

G8-22(Ca)

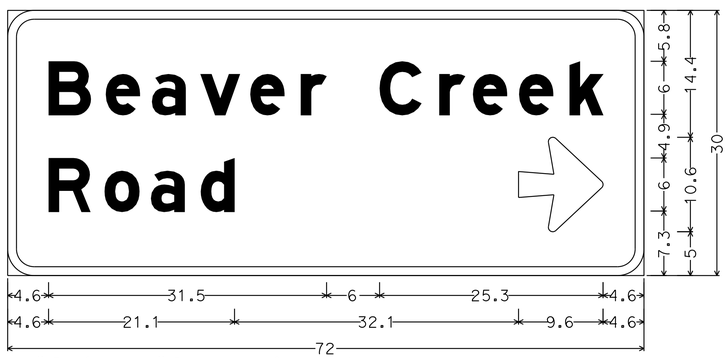

3.0" Radius, 1.0" Border, White on Green;
[Beaver Creek] E Mod; [Road] E Mod; Arrow 6UC-2LH - 9.6" 0°;

3-8

G8-22(Ca)

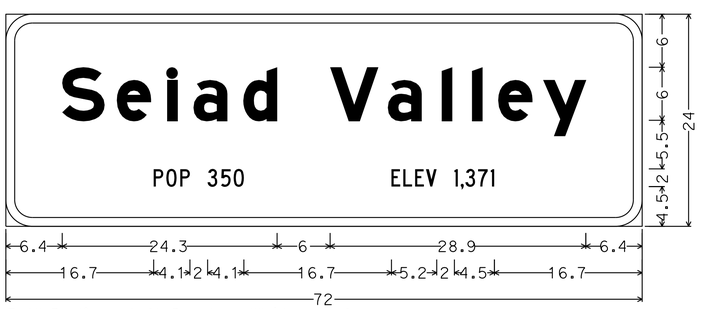

3.0" Radius, 1.0" Border, White on Green;
[Seiad Valley] E Mod; [POP 350] C; [ELEV 1,371] C;

2-10

G9-2(Ca)

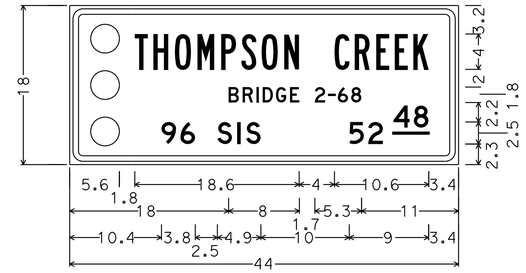

1.5" Radius, 0.6" Border, 0.4" Indent, Black on White;
[THOMPSON CREEK] B; [BRIDGE 2-68] D;
[96 SIS 52.48] D;

1-2

G11-4.1(Ca)

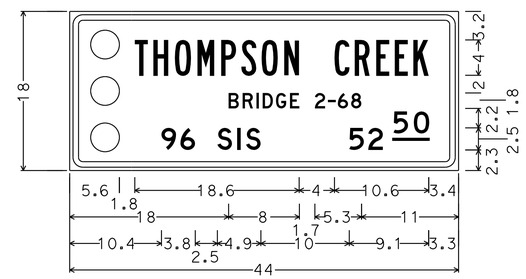

1.5" Radius, 0.6" Border, 0.4" Indent, Black on White;
[THOMPSON CREEK] B; [BRIDGE 2-68] D;
[96 SIS 52.48] D;

1-4

G11-4.1(Ca)

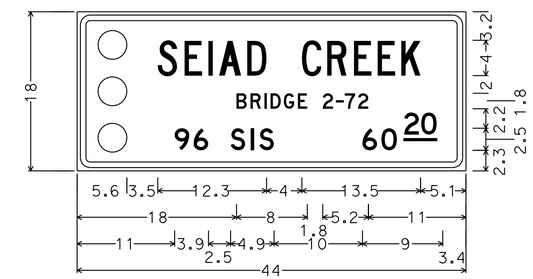

1.5" Radius, 0.6" Border, 0.4" Indent, Black on White;
[SEIAD CREEK] C; [BRIDGE 2-72] D;
[96 SIS 60.17] D;

2-14

G11-4.1(Ca)

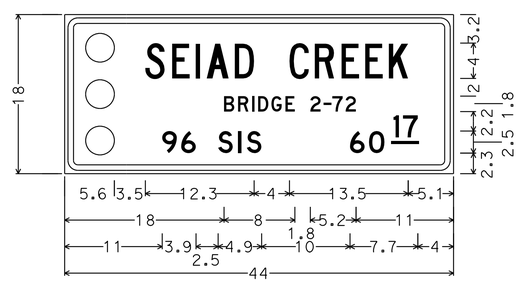

1.5" Radius, 0.6" Border, 0.4" Indent, Black on White;
[SEIAD CREEK] C; [BRIDGE 2-72] D;
[96 SIS 60.17] D;

2-12

G11-4.1(Ca)

SIGN DETAILS

NO SCALE

SD-2

STATE OF CALIFORNIA - DEPARTMENT OF TRANSPORTATION
Caltrans® TRAFFIC OPS

FUNCTIONAL SUPERVISOR: ROB STINGER
CALCULATED-DESIGNED BY: FRANK RIVAS
CHECKED BY: DAN FISHER
REVISED BY / DATE REVISED

P:\proj1\02\4E650_plans\pse\24e650ob002.dgn

LAST REVISION 05-01-16 | DATE PLOTTED => 22-AUG-2016 | TIME PLOTTED => 15:21

Dist	COUNTY	ROUTE	POST MILES TOTAL PROJECT	SHEET No.	TOTAL SHEETS
02	Sis	96	R52.5/88.4	53	208

REGISTERED CIVIL ENGINEER 06-12-16 DATE

06-15-16
PLANS APPROVAL DATE

REGISTERED PROFESSIONAL ENGINEER FRANK RIVAS No. C53592 Exp. 6/30/17 CIVIL STATE OF CALIFORNIA

THE STATE OF CALIFORNIA OR ITS OFFICERS OR AGENTS SHALL NOT BE RESPONSIBLE FOR THE ACCURACY OR COMPLETENESS OF SCANNED COPIES OF THIS PLAN SHEET.

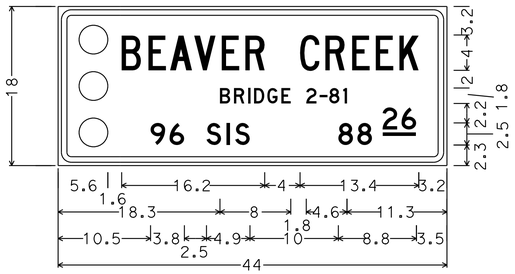

1.5" Radius, 0.6" Border, 0.4" Indent, Black on White;
[BEAVER CREEK] C; [BRIDGE 2-81] D;
[96 SIS 88.26] D;

3-4

G11-4.1(Ca)

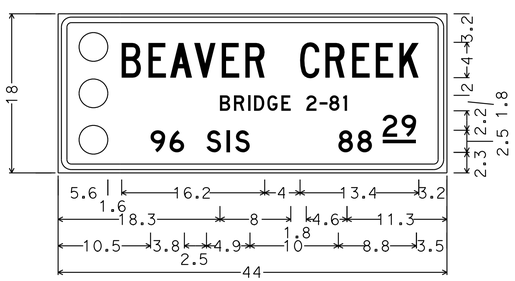

1.5" Radius, 0.6" Border, 0.4" Indent, Black on White;
[BEAVER CREEK] C; [BRIDGE 2-81] D;
[96 SIS 88.26] D;

3-6

G11-4.1(Ca)

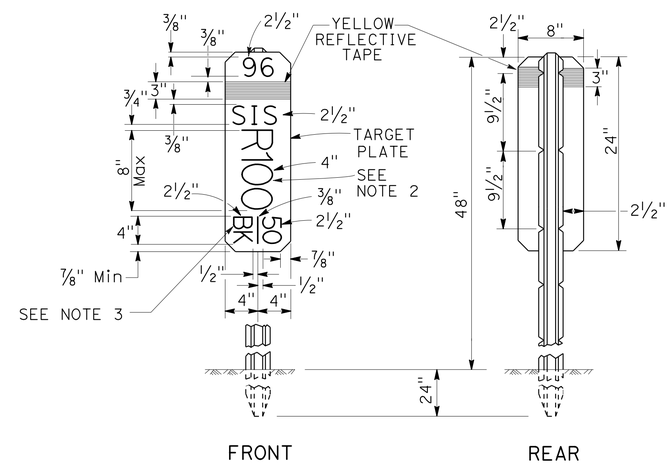

NOTES:
1. THE MARKER SHALL BE WHITE (NON-REFLECTIVE) TARGET PLATE WITH BLACK SERIES D NUMERALS AND LETTERS.
2. A POST MILE PREFIX, SUCH AS "R", SHALL APPLY ONLY WHEN DIRECTED BY THE ENGINEER.
3. "BK" (BACK), "AH" (AHEAD), OR A BLANK SPACE SHALL APPLY AS DIRECTED BY THE ENGINEER.
4. ALL INFORMATION SHALL BE IN ENGLISH UNITS (MILES).

POST MILE MARKER DETAIL

SIGN DETAILS
NO SCALE

SD-3

REVISED BY	DATE REVISED

FRANK RIVAS — DAN FISHER — CALCULATED-DESIGNED BY — CHECKED BY — FUNCTIONAL SUPERVISOR: ROB STINGER

STATE OF CALIFORNIA - DEPARTMENT OF TRANSPORTATION — Caltrans — TRAFFIC OPS

P:\proj1\02\4E650_plans\pse\24e650ob003.dgn

LAST REVISION 05-01-16 | DATE PLOTTED => 22-AUG-2016 | TIME PLOTTED => 15:22

Dist	COUNTY	ROUTE	POST MILES TOTAL PROJECT	SHEET No.	TOTAL SHEETS
02	Sis	96	R52.5/88.4	54	208

Lori Ewens 06-12-16
REGISTERED CIVIL ENGINEER DATE

06-15-16
PLANS APPROVAL DATE

REGISTERED PROFESSIONAL ENGINEER LORI EWENS No. C43919 Exp. 6-30-17 CIVIL STATE OF CALIFORNIA

THE STATE OF CALIFORNIA OR ITS OFFICERS OR AGENTS SHALL NOT BE RESPONSIBLE FOR THE ACCURACY OR COMPLETENESS OF SCANNED COPIES OF THIS PLAN SHEET.

NOTES:

1. (N) - NOT A SEPARATE PAY ITEM, FOR INFORMATION ONLY.
2. FEDERAL SIGN CODES ARE SHOWN UNLESS DESIGNATED BY (CA) WHICH INDICATES A CALIFORNIA SIGN CODE.

ROADSIDE SIGN QUANTITIES

SHEET No.	SIGN No.	SIGN CODE	PANEL SIZE	MESSAGE/DESCRIPTION	(N) POST MATERIAL SIZE AND APPROXIMATE LENGTH	ROADSIDE SIGN - ONE POST	ROADSIDE SIGN - TWO POST	REMOVE ROADSIDE SIGN	* TREATED WOOD WASTE
					METAL 2½" x 2½"				
			INCHES		LF	EA	EA	EA	LB
PD-1	1-1	G11		THOMPSON CREEK				1	65
	1-2	G11-5 (CA)	44 x 18	THOMPSON CREEK	11.0	1			
	1-3	G11		THOMPSON CREEK				1	65
	1-4	G11-5 (CA)	44 x 18	THOMPSON CREEK	11.0	1			
	1-5	S32/S32A S32-1		ADOPT-A-HIGHWAY LITTER REMOVAL SYMBOL				1	65
	1-6	S32 (CA) S32A (CA) S32-1 (CA)	36 x 30 10 x 12 15 x 18	ADOPT-A-HIGHWAY ADOPT-A-HIGHWAY SYMBOL LITTER REMOVAL SYMBOL	10.5	1			
PD-2	2-1	W11-1 W7-3A		BIKE ROUTE SYMBOL NEXT 20 MILES				1	65
	2-2	W11-1 W7-3A	30 x 30 24 x 12	BIKE ROUTE SYMBOL NEXT 9 MILES	11.0	1			
	2-3	R1-1		STOP				1	65
	2-4	R1-1	30 x 30	STOP	11.0	1			
	2-5	M3-4 G50		WEST STATE ROUTE SHIELD				1	65
	2-6	M3-4 G28-1 (CA)	24 x 12 21 x 18	WEST STATE ROUTE SHIELD	13.0	1			
	2-7	G8		SEIAD CREEK ROAD				1	65
	2-8	G1-1 (CA)	66 x 30	SEIAD CREEK ROAD		1			
	2-9	G9		SEIAD VALLEY				1	130
	2-10	G9-2 (CA)	72 x 24	SEIAD VALLEY	8.0 (x2)		1		
	2-11	G11		SEIAD CREEK				1	65
	2-12	G11-4 (CA)	44 x 18	SEIAD CREEK	12.5	1			
	2-13	G11		SEIAD CREEK				1	65
	2-14	G11-4 (CA)	44 x 18	SEIAD CREEK	11.0	1			
PD-3	3-1	R1-1		STOP				1	65
	3-2	R1-1	30 x 30	STOP	11.0	1			
	3-3	G11		BEAVER CREEK				1	65
	3-4	G11-4 (CA)	44 x 18	BEAVER CREEK	11.0	1			
	3-5	G11		BEAVER CREEK				1	65
	3-6	G11-4 (CA)	44 x 18	BEAVER CREEK	11.0	1			
	3-7	G8		BEAVER CREEK ROAD				1	
	3-8	G1-1 (CA)	72 x 30	BEAVER CREEK ROAD	13.0 (x2)		1		
					TOTAL	12	2	14	910

NOTE: 93 SQYD VEGETATION CONTROL (MINOR CONCRETE) INCLUDED IN METAL BEAM GUARD RAILING QUANTITIES TABLE (Q-2)

SIGN QUANTITIES
SQ-1

REVISED BY | DATE REVISED
AUSTIN BUIST | LORI EWENS
CALCULATED-DESIGNED BY | CHECKED BY
FUNCTIONAL SUPERVISOR
STEVE TOPAL

STATE OF CALIFORNIA - DEPARTMENT OF TRANSPORTATION
Caltrans
DESIGN

P:\proj1\02\4E650_plans\pse\24e650oc001.dgn

LAST REVISION | DATE PLOTTED => 22-AUG-2016 | TIME PLOTTED => 15:22

Dist	COUNTY	ROUTE	POST MILES TOTAL PROJECT	SHEET No.	TOTAL SHEETS
02	Sis	96	R52.5/88.4	55	208

Lori Ewens 06-12-16
REGISTERED CIVIL ENGINEER DATE

06-15-16
PLANS APPROVAL DATE

REGISTERED PROFESSIONAL ENGINEER LORI EWENS No. C43919 Exp. 6-30-17 CIVIL STATE OF CALIFORNIA

THE STATE OF CALIFORNIA OR ITS OFFICERS OR AGENTS SHALL NOT BE RESPONSIBLE FOR THE ACCURACY OR COMPLETENESS OF SCANNED COPIES OF THIS PLAN SHEET.

NOTES:

1. (N) - NOT A SEPARATE PAY ITEM, FOR INFORMATION ONLY.
2. FEDERAL SIGN CODES ARE SHOWN UNLESS DESIGNATED BY (Ca) WHICH INDICATES A CALIFORNIA SIGN CODE.

ABBREVIATIONS:

Retro RETROREFLECTIVE
RSXI RETROREFLECTIVE SHEETING (TYPE XI)
FYG FLOURESCENT YELLOW-GREEN

ROADSIDE SIGN PANEL QUANTITIES

SHEET No.	SIGN No.	SIGN CODE	PANEL SIZE (INCHES)	MESSAGE/DESCRIPTION	BACKGROUND SHEETING COLOR	BACKGROUND Retro ASTM TYPE	LEGEND SHEETING COLOR	LEGEND Retro ASTM TYPE	(N) PROTECTIVE FILM (PREMIUM)	FURNISH SINGLE SHEET ALUMINUM SIGN (0.063" - UNFRAMED) (SQFT)	FURNISH SINGLE SHEET ALUMINUM SIGN (0.063" UNFRAMED) FOR TYPE XI SHEETING (SQFT)	FURNISH SINGLE SHEET ALUMINUM SIGN (0.063" FRAMED) FOR TYPE XI SHEETING (SQFT)	RETROREFLECTIVE SHEETING (TYPE XI) (SQFT)
PD-1	1-2	G11-5 (CA)	44 x 18	THOMPSON CREEK	WHITE	IX	BLACK			5.5			
	1-4	G11-5 (CA)	44 x 18	THOMPSON CREEK	WHITE	IX	BLACK			5.5			
	1-6	S32 (CA)	36 x 30	ADOPT-A-HIGHWAY	PANTONE	XI	WHITE	XI			7.5		7.5
		S32A (CA)	10 x 12	ADOPT-A-HIGHWAY SYMBOL	PANTONE	XI	WHITE	XI			0.8		0.8
		S32-1 (CA)	15 x 18	LITTER REMOVAL SYMBOL	PANTONE	XI	WHITE	XI			1.9		1.9
PD-2	2-2	W11-1	30 x 30	BIKE ROUTE SYMBOL	FGY	XI	BLACK				6.3		6.3
		W7-3A	24 x 12	NEXT 9 MILES	FGY	XI	BLACK				2.0		2.0
	2-4	R1-1	30 x 30	STOP	RED	XI	WHITE	XI			6.3		6.3
	2-6	M3-4	24 x 12	WEST	GREEN	XI	WHITE	XI			2.0		2.0
		G28-1 (CA)	21 x 18	STATE ROUTE SHIELD	GREEN	XI	WHITE	XI			2.6		2.6
	2-8	G1-1 (CA)	66 x 30	SEIAD CREEK ROAD	GREEN	XI	WHITE	XI	X			13.8	13.8
	2-10	G9-2 (CA)	72 x 24	SEIAD VALLEY	GREEN	XI	WHITE	XI	X			12.0	12.0
	2-12	G11-4 (CA)	44 x 18	SEIAD CREEK	WHITE	IX	BLACK			5.5			
	2-14	G11-4 (CA)	44 x 18	SEIAD CREEK	WHITE	IX	BLACK			5.5			
PD-3	3-2	R1-1	30 x 30	STOP	RED	XI	WHITE	XI			6.3		6.3
	3-4	G11-4 (CA)	44 x 18	BEAVER CREEK	WHITE	IX	BLACK			5.5			
	3-6	G11-4 (CA)	44 x 18	BEAVER CREEK	WHITE	IX	BLACK			5.5			
	3-8	G1-1 (CA)	72 x 30	BEAVER CREEK ROAD	GREEN	XI	WHITE	XI	X			15.0	15.0
									TOTAL	33.0	35.7	40.8	76.5

SIGN QUANTITIES

SQ-2

REVISED BY | DATE REVISED
AUSTIN BUIST | LORI EWENS
CALCULATED-DESIGNED BY | CHECKED BY
FUNCTIONAL SUPERVISOR: STEVE TOPAL

STATE OF CALIFORNIA - DEPARTMENT OF TRANSPORTATION
Caltrans DESIGN

P:\proj1\02\4E650_plans\pse\24e650oc002.dgn

LAST REVISION | DATE PLOTTED => 22-AUG-2016 | TIME PLOTTED => 15:22

Dist	COUNTY	ROUTE	POST MILES TOTAL PROJECT	SHEET No.	TOTAL SHEETS
02	Sis	96	R52.5/88.4	56	208

Lori Ewens 06-12-16
REGISTERED CIVIL ENGINEER DATE

06-15-16
PLANS APPROVAL DATE

REGISTERED PROFESSIONAL ENGINEER LORI EWENS No. C43919 Exp. 6-30-17 CIVIL STATE OF CALIFORNIA

THE STATE OF CALIFORNIA OR ITS OFFICERS OR AGENTS SHALL NOT BE RESPONSIBLE FOR THE ACCURACY OR COMPLETENESS OF SCANNED COPIES OF THIS PLAN SHEET.

NOTE:

1. (N) - NOT A SEPARATE PAY ITEM, FOR INFORMATION ONLY.

ROADWAY QUANTITIES

LOCATION	RESET MAILBOX	COLD PLANE ASPHALT CONCRETE PAVEMENT	ROADWAY EXCAVATION	SHOULDER BACKING	EMBANKMENT (N)	CLASS 2 AGGREGATE BASE	HOT MIX ASPHALT (TYPE A, WARM MIX TECHNOLOGY)	TACK COAT	COMMENTS
	EA	SQYD	CY	TON	CY	CY	TON	TON	
"T" 10+30 TO 11+70		409.2					58.9	0.17	PAVEMENT CONFORM
"T" 11+70 TO 12+94			118.7	20.0	90.6	58.7	112.8	0.09	WEST END OF BRIDGE
"T" 14+19 TO 15+70	1		138.9	20.0	128.7	71.2	136.6	0.10	EAST END OF BRIDGE
"T" 15+70 TO 16+00		80.0					11.5	0.03	PAVEMENT CONFORM
"TD1"		170.7					24.6	0.07	DRIVEWAY
"TD2"		147.6					21.2	0.06	DRIVEWAY
"S" 9+46 TO 9+76		98.1					14.1	0.04	PAVEMENT CONFORM
"S" 9+76 TO 11+28			169.7	22.0	23.8	89.4	171.6	0.12	WEST END OF BRIDGE
"S" 12+83 TO 14+90			221.7	30.0	36.3	120.3	231.0	0.16	EAST END OF BRIDGE
"S" 14+90 TO 15+20		95.8					13.8	0.04	PAVEMENT CONFORM
"S" 13+58 TO 15+20		210.6					22.7	0.09	LEFT PAVED AREA
"S" 13+77 TO 15+20		152.5					16.5	0.06	RIGHT PAVED AREA
"SD1"		153.8					44.3	0.06	DRIVEWAY
"S" 14+95 R†			11.1				24.0	0.03	DRIVEWAY
DRIVEWAY AT "B" 7+00 R†		76.1					11.0	0.03	DRIVEWAY
"B" 9+70 TO 11+10		420.1					60.5	0.33	PAVEMENT CONFORM
"B" 11+10 TO 12+08			77.9	14.3	33.4	47.9	92.0	0.06	WEST END OF BRIDGE
"B" 13+58 TO 14+92			128.0	19.6	498.1	60.7	116.6	0.08	EAST END OF BRIDGE
"B" 14+92 TO 15+22		71.4					10.3	0.03	PAVEMENT CONFORM
"BR1"		776.1					111.8	0.32	BEAVER CREEK ROAD CONNECTION
FROM DRAINAGE QUANTITIES (DQ-1)							1.2		
FROM TRAFFIC HANDLING QUANTITIES (THQ-1)		636.0							
TOTAL	1	3498.0	866.0	125.9	810.9	448.2	1305.0	1.97	

TEMPORARY FENCE QUANTITIES

LOCATION	Temp FENCE (TYPE ESA)
	LF
THOMPSON CREEK BRIDGE	1124
SEIAD CREEK BRIDGE	616
BEAVER CREEK BRIDGE	1273
TOTAL	3013

SUMMARY OF QUANTITIES

Q-1

REVISED BY | DATE REVISED
AUSTIN BUIST | LORI EWENS
CALCULATED-DESIGNED BY | CHECKED BY
FUNCTIONAL SUPERVISOR: STEVE TOPAL

STATE OF CALIFORNIA - DEPARTMENT OF TRANSPORTATION
Caltrans DESIGN

P:\proj1\02\4E650_plans\pse\24e650pa001.dgn

LAST REVISION 02-23-16 | DATE PLOTTED => 22-AUG-2016 TIME PLOTTED => 15:22

Dist	COUNTY	ROUTE	POST MILES TOTAL PROJECT	SHEET No.	TOTAL SHEETS
02	Sis	96	R52.5/88.4	57	208

Lori Ewens 06-12-16
REGISTERED CIVIL ENGINEER DATE

06-15-16
PLANS APPROVAL DATE

REGISTERED PROFESSIONAL ENGINEER LORI EWENS No. C43919 Exp. 6-30-17 CIVIL STATE OF CALIFORNIA

THE STATE OF CALIFORNIA OR ITS OFFICERS OR AGENTS SHALL NOT BE RESPONSIBLE FOR THE ACCURACY OR COMPLETENESS OF SCANNED COPIES OF THIS PLAN SHEET.

NOTE:

1. SEE DRAINAGE DETAILS FOR ADDITIONAL QUANTITY OF RSP.

ROCK SLOPE PROTECTION QUANTITIES

LOCATION	ROCK SLOPE PROTECTION (1T, WITH VOID FILLER)	ROCK SLOPE PROTECTION (1/2T, WITH VOID FILLER)	ROCK SLOPE PROTECTION (1/4T, WITH VOID FILLER)	ROCK SLOPE PROTECTION (LIGHT, METHOD B)
	CY	CY	CY	CY
THOMPSON CREEK BRIDGE	435	315		97
SEIAD CREEK BRIDGE			450	
BEAVER CREEK BRIDGE		133		
FROM DRAINAGE QUANTITIES (DQ-1)				4
TOTAL	435	448	450	101

PLANTING TUBE QUANTITIES

ALIGNMENT	STATION	OFFSET	"L" LF
"T"	13+69	22' L+	5.0
"T"	13+71	22' R+	5.0
"S"	11+40	26' L+	5.0
"S"	11+40	26' R+	5.0
"S"	12+71	26' L+	5.0
"S"	12+71	26' R+	5.0
"B"	12+09	25' L+	5.0
"B"	12+14	22' R+	5.0
		TOTAL	40.0

METAL BEAM GUARD RAILING QUANTITIES

LOCATION	REMOVE GUARDRAIL	VEGETATION CONTROL (MINOR CONCRETE)	SINGLE THRIE BEAM BARRIER (WOOD POST)	TRANSISTION RAILING (TYPE WB)	END ANCHOR ASSEMBLY (TYPE SFT)	ALTERNATIVE IN-LINE TERMINAL SYSTEM	ALTERNATIVE FLARED TERMINAL SYSTEM	ALTERNATIVE CRASH CUSHION SYSTEM	TREATED WOOD WASTE	END CAP (TYPE TC)	COMMENTS
	LF	SQYD	LF	EA	EA	EA	EA	EA	LB	EA	
"T" 12+14 TO 12+77 L+	65	57		1			1		1434		TYPE 12B LAYOUT
"T" 14+34 TO 14+97 L+	65	33		1			1		1434		TYPE 12B LAYOUT
"T" 12+14 TO 12+77 R+	65	58		1			1		1434		TYPE 12B LAYOUT
"T" 14+34 TO 14+97 R+	65	53		1			1		1434		TYPE 12B LAYOUT
"S" 10+60 TO 11+23 L+	65	74		1			1		1434		TYPE 12B LAYOUT
"S" 12+88 TO 13+18 L+	38	14						1	1032		T-2 CRASH CUSHION
"S" 10+60 TO 11+23 R+	65	47		1			1		1434		TYPE 12B LAYOUT
"S" 12+88 TO 13+51 R+	65	39		1			1		1434		TYPE 12B LAYOUT
"B" 11+56 TO 11+88 L+	75	53	50		1				1434		SINGLE THRIE BEAM BARRIER
"B" 13+93 TO 14+68 L+	65	56		1		1			1300		TYPE 12A LAYOUT
"B" 11+12 TO 11+75 R+	130	23		1			1		1903		TYPE 12B LAYOUT
"B" 13+99 TO 14+74 R+	65	93		1		1			1300		TYPE 12A LAYOUT WITH 2' FLARE
"B" 11+88 L+										1	
FROM ROADSIDE SIGN QUANTITIES (SQ-1)		93							910		
TOTAL	893	693	50	10	1	2	8	1	17,917	1	

NOTE: USE WOOD POSTS FOR STBB, TRANSITION RAILING, END ANCHOR ASSEMBLY, AND TERMINAL SYSTEMS

ROADSIDE CLEARING (TREE REMOVAL)

ALIGNMENT	STATION	OFFSET	DIAMETER AND TYPE
"T"	10+79	30' L+	1.0' PINE
"T"	11+82	31' L+	1.0' PINE
"T"	12+06	29' L+	1.0' PINE
"T"	12+27	27' R+	1.0' PINE
"T"	12+32	27' L+	1.0' PINE
"B"	9+23	41' R+	1.0' OAK
"B"	9+79	58' L+	1.0' PINE
"B"	9+90	60' R+	1.0' PINE
"B"	15+09	15' R+	1.0' PINE
"B"	14+90	20' L+	0.8' CEDAR
"B"	15+20	23' L+	0.8' CEDAR
"B"	15+69	32' L+	0.8' CEDAR
		TOTAL	12

SUMMARY OF QUANTITIES

Q-2

REVISED BY | DATE REVISED
AUSTIN BUIST | LORI EWENS
CALCULATED-DESIGNED BY | CHECKED BY
FUNCTIONAL SUPERVISOR: STEVE TOPAL
STATE OF CALIFORNIA - DEPARTMENT OF TRANSPORTATION
Caltrans® DESIGN
P:\proj1\02\4E650_plans\pse\24e650pa002.dgn

LAST REVISION | DATE PLOTTED => 22-AUG-2016 | TIME PLOTTED => 15:22
02-23-16

Dist	COUNTY	ROUTE	POST MILES TOTAL PROJECT	SHEET No.	TOTAL SHEETS
02	Sis	96	R52.5/88.4	58	208

LICENSED LANDSCAPE ARCHITECT

06-15-16
PLANS APPROVAL DATE

LICENSED LANDSCAPE ARCHITECT J. PATRICK SULLIVAN #3125 Signature 07/31/16 Renewal Date 06/04/16 Date STATE OF CALIFORNIA

THE STATE OF CALIFORNIA OR ITS OFFICERS OR AGENTS SHALL NOT BE RESPONSIBLE FOR THE ACCURACY OR COMPLETENESS OF SCANNED COPIES OF THIS PLAN SHEET.

NOTES:

1. FOR ACCURATE RIGHT OF WAY DATA, CONTACT RIGHT OF WAY ENGINEERING AT THE DISTRICT OFFICE.
2. EXACT LOCATIONS FOR EROSION CONTROL WILL BE DETERMINED BY THE ENGINEER.

LEGEND

HYDROSEED

INCORPORATE MATERIAL (COMPOST)

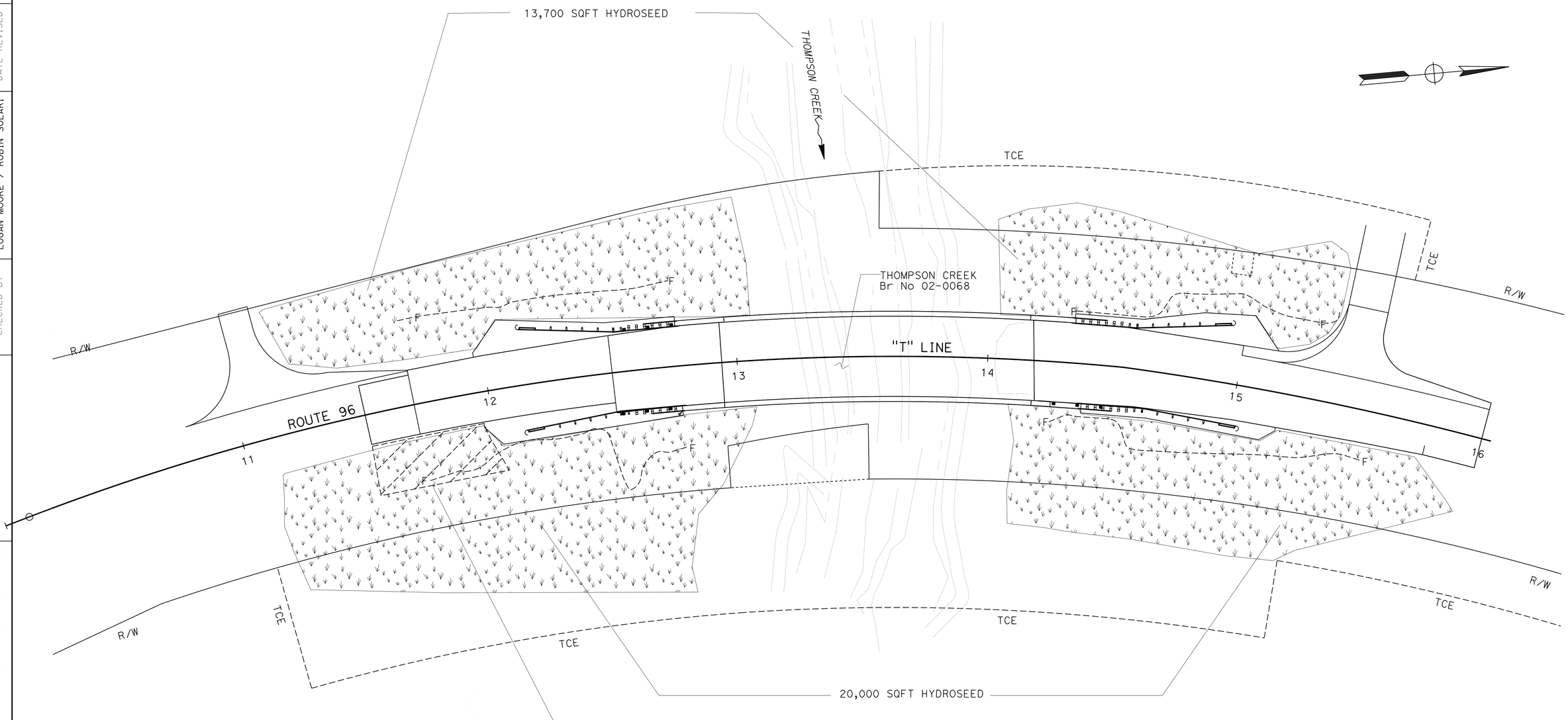

LOCATION 1
THOMPSON CREEK

EROSION CONTROL PLAN

SCALE: 1" = 20'

EC-1

APPROVED FOR EROSION CONTROL WORK ONLY

REVISED BY | DATE REVISED

J. PATRICK SULLIVAN | LOGAN MOORE / ROBIN SOLARI

CALCULATED-DESIGNED BY | CHECKED BY

DESIGN UNIT SENIOR | STEVE THORNE

STATE OF CALIFORNIA - DEPARTMENT OF TRANSPORTATION
Caltrans® LANDSCAPE ARCHITECTURE

P:\proj\02\4E650_plans\pse\24e650te001.dgn

LAST REVISION 05-04-16 | DATE PLOTTED => 22-AUG-2016 | TIME PLOTTED => 15:22

Dist	COUNTY	ROUTE	POST MILES TOTAL PROJECT	SHEET No.	TOTAL SHEETS
02	Sis	96	R52.5/88.4	59	208

LICENSED LANDSCAPE ARCHITECT

06-15-16
PLANS APPROVAL DATE

LICENSED LANDSCAPE ARCHITECT J. PATRICK SULLIVAN #3125 Signature 07/31/16 Renewal Date 06/04/16 Date STATE OF CALIFORNIA

THE STATE OF CALIFORNIA OR ITS OFFICERS OR AGENTS SHALL NOT BE RESPONSIBLE FOR THE ACCURACY OR COMPLETENESS OF SCANNED COPIES OF THIS PLAN SHEET.

NOTES:

1. FOR ACCURATE RIGHT OF WAY DATA, CONTACT RIGHT OF WAY ENGINEERING AT THE DISTRICT OFFICE.

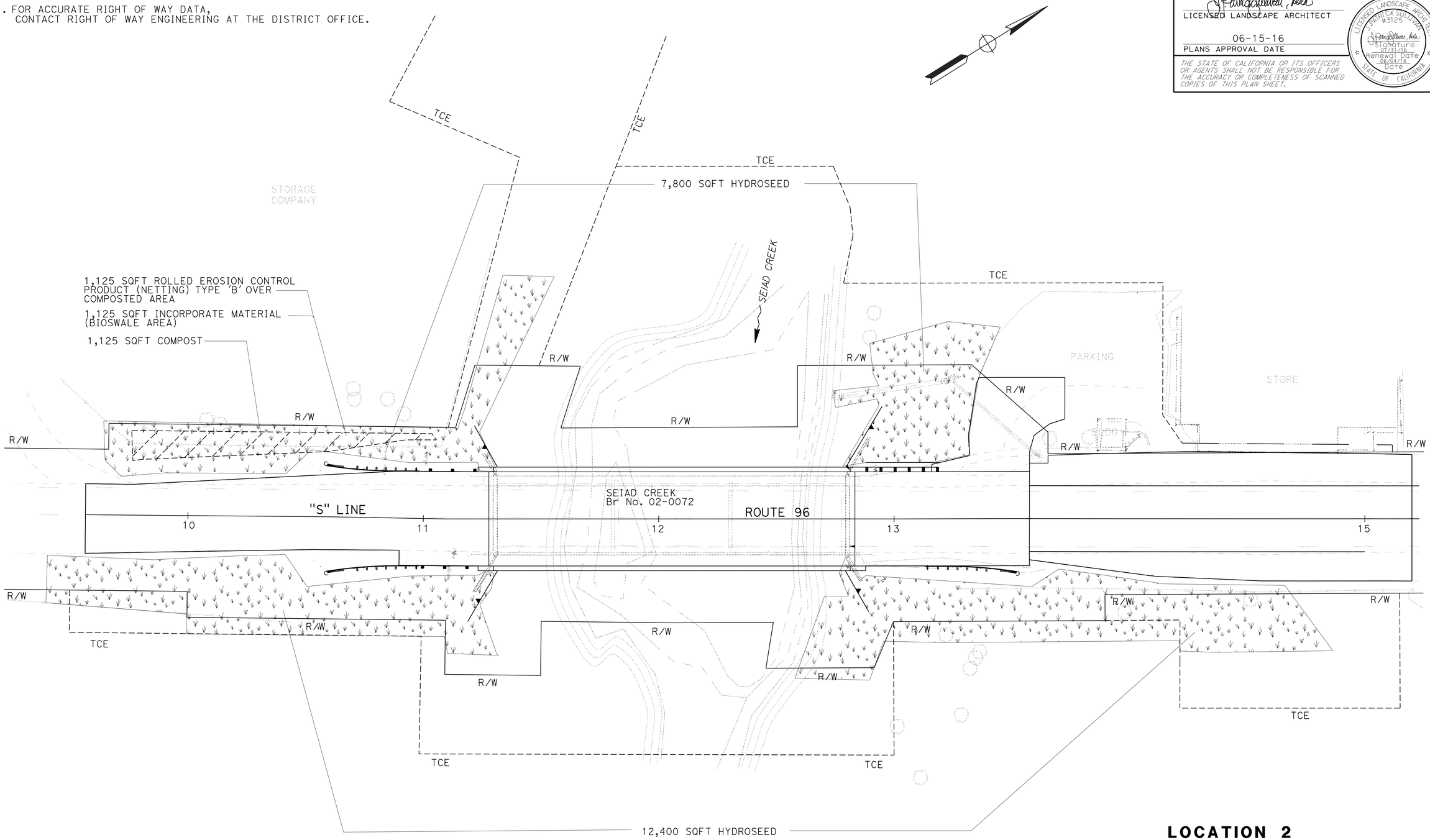

LOCATION 2
SEIAD CREEK

EROSION CONTROL PLAN

SCALE: 1" = 20'

EC-2

APPROVED FOR EROSION CONTROL WORK ONLY

STATE OF CALIFORNIA - DEPARTMENT OF TRANSPORTATION
Caltrans® LANDSCAPE ARCHITECTURE

DESIGN UNIT SENIOR: STEVE THORNE
CALCULATED-DESIGNED BY: J. PATRICK SULLIVAN
CHECKED BY: LOGAN MOORE / ROBIN SOLARI
REVISED BY
DATE REVISED

P:\proj1\02\4E650_plans\pse\24e650te002.dgn

LAST REVISION 05-04-16
DATE PLOTTED => 22-AUG-2016
TIME PLOTTED => 15:22

Dist	COUNTY	ROUTE	POST MILES TOTAL PROJECT	SHEET No.	TOTAL SHEETS
02	Sis	96	R52.5/88.4	60	208

LICENSED LANDSCAPE ARCHITECT

06-15-16
PLANS APPROVAL DATE

LICENSED LANDSCAPE ARCHITECT
J. PATRICK SULLIVAN
#3125
Signature 07/31/16
Renewal Date 06/04/16
Date
STATE OF CALIFORNIA

THE STATE OF CALIFORNIA OR ITS OFFICERS OR AGENTS SHALL NOT BE RESPONSIBLE FOR THE ACCURACY OR COMPLETENESS OF SCANNED COPIES OF THIS PLAN SHEET.

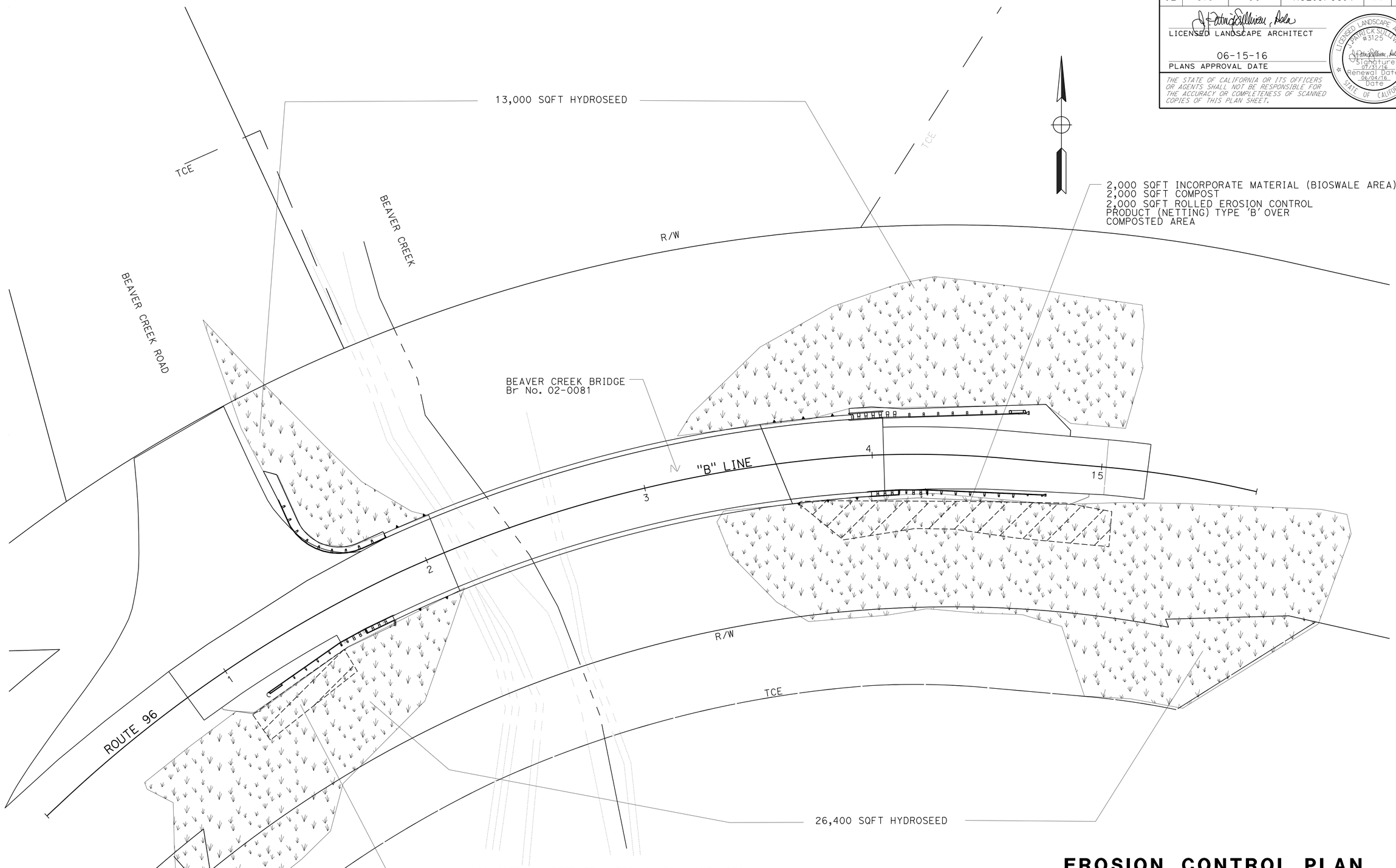

APPROVED FOR EROSION CONTROL WORK ONLY

EROSION CONTROL PLAN

LOCATION 3 - BEAVER CREEK

SCALE: 1" = 20'

EC-3

REVISED BY	DATE REVISED

CALCULATED-DESIGNED BY: J. PATRICK SULLIVAN
CHECKED BY: LOGAN MOORE / ROBIN SOLARI
DESIGN UNIT SENIOR: STEVE THORNE

STATE OF CALIFORNIA - DEPARTMENT OF TRANSPORTATION
Caltrans® LANDSCAPE ARCHITECTURE

P:\proj1\02\4E650_plans\pse\24e650te003.dgn

LAST REVISION 05-04-16
DATE PLOTTED => 22-AUG-2016
TIME PLOTTED => 15:22

Dist	COUNTY	ROUTE	POST MILES TOTAL PROJECT	SHEET No.	TOTAL SHEETS
02	Sis	96	R52.5/88.4	61	208

LICENSED LANDSCAPE ARCHITECT

06-15-16
PLANS APPROVAL DATE

LICENSED LANDSCAPE ARCHITECT J. PATRICK SULLIVAN #3125 Signature 07/31/16 Renewal Date 06/04/16 Date STATE OF CALIFORNIA

THE STATE OF CALIFORNIA OR ITS OFFICERS OR AGENTS SHALL NOT BE RESPONSIBLE FOR THE ACCURACY OR COMPLETENESS OF SCANNED COPIES OF THIS PLAN SHEET.

NOTES:

1. (N) - NOT A SEPARATE PAY ITEM, FOR INFORMATION ONLY
2. STRAW MUST COMPLETELY COVER ALL DISTURBED AREAS.
3. EROSION CONTROL QUANTITIES ARE BASED UPON 2.2 ACRES OF DISTURBED AREAS

EROSION CONTROL SEQUENCE/APPLICATION RATES (N) AT BIOSWALE LOCATIONS

SEQUENCE	ITEM	MATERIAL		APPLICATION RATE (N)
		DESCRIPTION	TYPE	
STEP 1	APPLY COMPOST	COMPOST	WOOD PRODUCT	4" OF DEPTH ATOP FINISH GRADE (PER SF)
STEP 2	INCORPORATE COMPOST	INCORPORATE MATERIAL INTO THE SOIL	————	THOROUGHLY MIX INTO 12" OF DEPTH- (PER SQFT)
STEP 3	APPLY HYDROSEED	PER THE THREE STEP PROCESSES	MIX	PER TABLE

COMPOST TOTALS

MATERIAL		
DESCRIPTION	TYPE	
COMPOST	WOOD PRODUCT	COMPOST
LOCATION -BIOSWALES		
SHEET NO.		SQFT
EC-1		1,025
EC-2		1,125
EC-3		2,600
	TOTAL SQFT	4,750

INCORPORATE MATERIALS TOTALS

MATERIAL		
DESCRIPTION	TYPE	
INCORPORATE MATERIALS	COMPOST	
LOCATION -BIOSWALES		
SHEET NO.		SQFT
EC-1		1,025
EC-2		1,125
EC-3		2,600
	TOTAL SQFT	4,750

HYDROSEED SEQUENCE/APPLICATION RATES (N)

SEQUENCE	ITEM	MATERIAL		APPLICATION RATE (N)
		DESCRIPTION	TYPE	
STEP 1	HYDROSEED APPLICATION	PURE LIVE SEED	MIX	80 LB/ACRE
		FIBER	ALTERNATE	2000 LB/ACRE
		SLOW RELEASE FERTLIZER	GRANULAR 16-16-16	200 LB/ACRE
STEP 2	APPLY STRAW	STRAW	WHEAT OR BARLEY	5 TONS/ACRE
STEP 3	HYDROSEED (HYDROMULCH) APPLICATION	COMPOST	WOOD PRODUCT	1.2 CY/ACRE
		FIBER	ALTERNATE	1500 LB/ACRE
		TACKIFIER	PSYLLIUM	200 LB/ACRE

SEED MIX (N)

BOTANICAL NAME (COMMON NAME)	PERCENT GERMINATION (MINIMUM)	POUNDS PURE LIVE SEED PER ACRE (N) (SLOPE MEASUREMENT)
ACHILLEA MILLEFOLIUM (COMMON YARROW)	50	2
BROMUS CARINATUS (CALIF. BROME)	80	15
ESCHSCHOLZIA CALIFORNICA (CALIFORNIA POPPY)	60	5
ELYMUS GLAUCUS (BLUE WILD RYE)	70	15
FESTUCA IDAHOENSIS (WESTERN FESCUE)	70	15
LOTUS PURSHIANUS (SPANISH CLOVER)	70	8
SECALE CEREALE 'MERCED' (WINTER RYE COVER CROP-STERILE)	70	20
	TOTAL	80

ROLLED EROSION CONTROL PRODUCT (NETTING) SEQUENCE/APPLICATION RATES (N)

SEQUENCE	ITEM	MATERIAL		APPLICATION RATE (N)
		DESCRIPTION	TYPE	
STEP 1	APPLY HYDROSEED	PURE LIVE SEED	MIX	80 LB/ACRE
		FIBER	ALTERNATE	2000 LB/ACRE
		SLOW RELEASE FERTLIZER	GRANULAR	100 LB/ACRE
STEP 2	APPLY ROLLED EROSION CONTROL PRODUCT (NETTING)	ROLLED EROSION CONTROL PRODUCT (NETTING)	TYPE "B"	PER SQFT
STEP 3	APPLY HYDROSEED (HYDROMULCH)	FIBER	ALTERNATE	2000 LB/ACRE
		TACKIFIER	PSYLLIUM	200 LB/ACRE

ROLLED EROSION CONTROL PRODUCT (NETTING) TOTALS

"T" LINE	"S" LINE	"B" LINE	STATIONING LINE	Lt/Rt	ROLLED EROSION CONTROL PRODUCT (NETTING)
					SQFT
X			11+00 TO 11+50	Rt	1,025
	X		09+35 TO 10+75	Lt	1,125
		X	11+01 TO 11+60	Rt	600
		X	13+65 TO 15+10	Rt	2,000
			TOTAL		4,750

HYDROSEED TOTALS

MATERIAL		TOTALS	
DESCRIPTION	TYPE		
FIBER	ALTERNATE	7,755 LB (N)	HYDROSEED
COMPOST	WOOD PRODUCT	2.64 CY (N)	
PURE LIVE SEED	MIX	176 LB (N)	
SLOW RELEASE FERTLIZER	GRANULAR	440 LB (N)	
STRAW	BARLEY OR WHEAT	20,910 LB (N)	
TACKIFIER	PSYLLIUM	440 LB (N)	
SHEET NO.			SQFT
EC-1			33,700
EC-2			21,140
EC-3			42,000
		TOTAL	96,890

EROSION CONTROL QUANTITIES

ECQ-1

REVISED BY	DATE REVISED
J. PATRICK SULLIVAN	LOGAN MOORE / ROBIN SOLARI
CALCULATED-DESIGNED BY	CHECKED BY
DESIGN UNIT SENIOR	STEVE THORNE

STATE OF CALIFORNIA - DEPARTMENT OF TRANSPORTATION
Caltrans® LANDSCAPE ARCHITECTURE

P:\proj1\02\4E650_plans\pse\24e650tg001.dgn

LAST REVISION 05-04-16 | DATE PLOTTED => 22-AUG-2016 TIME PLOTTED => 15:22

Dist	COUNTY	ROUTE	POST MILES TOTAL PROJECT	SHEET No.	TOTAL SHEETS
02	Sis	96	R52.5/88.4	62	208

REGISTERED ELECTRICAL ENGINEER 06-09-16 DATE

06-15-16
PLANS APPROVAL DATE

REGISTERED PROFESSIONAL ENGINEER J.M. HANNIGAN No. E13665 Exp. 6-30-17 ELECTRICAL STATE OF CALIFORNIA

THE STATE OF CALIFORNIA OR ITS OFFICERS OR AGENTS SHALL NOT BE RESPONSIBLE FOR THE ACCURACY OR COMPLETENESS OF SCANNED COPIES OF THIS PLAN SHEET.

NOTES:

1. FOR ACCURATE RIGHT OF WAY DATA, CONTACT RIGHT OF WAY ENGINEERING AT THE DISTRICT OFFICE.
2. MAINTAIN 10′ MINIMUM CLEARANCE FROM OVERHEAD ELECTRICAL UTILITY LINES.
3. ABOVE GRADE ELECTRICAL EQUIPMENT AND POLES MUST BE PLACED 15′ MINIMUM FROM ETW OR PROVIDE PROTECTION.
4. FOR POLE AND OVERHEAD CONDUCTOR DETAILS, SEE TRAFFIC HANDLING SHEETS.

LEGEND:

▭ ATS AND GENERATOR

ABBREVIATIONS:

ATS AUTOMATIC TRANSFER SWITCH
Cab CABINET

LEGEND (THIS SHEET):

1. MESSENGER WIRE, 2#12 (FB), 1#12 G.
2. 1"C, 1 DLC.
3. MESSENGER WIRE, 2#12 (FB), 1 DLC, 1#12 G.
4. MESSENGER WIRE, 2#12 (FB), 2 DLC, 1#12 G.

LOCATION 1
THOMPSON CREEK

TEMPORARY SIGNAL SYSTEM

SCALE: 1" = 20′

E-1

APPROVED FOR ELECTRICAL WORK ONLY

STATE OF CALIFORNIA - DEPARTMENT OF TRANSPORTATION
Caltrans® **ELECTRICAL DESIGN**

FUNCTIONAL SUPERVISOR: ROB STINGER
CALCULATED-DESIGNED BY: J.M. HANNIGAN
CHECKED BY: ARTURO ROBLES
REVISED BY
DATE REVISED

P:\proj\02\4E650_plans\pse\24e650ua001.dgn

LAST REVISION
DATE PLOTTED => 22-AUG-2016
TIME PLOTTED => 15:22

Dist	COUNTY	ROUTE	POST MILES TOTAL PROJECT	SHEET No.	TOTAL SHEETS
02	Sis	96	R52.5/88.4	63	208

REGISTERED ELECTRICAL ENGINEER 06-09-16 DATE

PLANS APPROVAL DATE 06-15-16

REGISTERED PROFESSIONAL ENGINEER J.M. HANNIGAN No. E13665 Exp. 6-30-17 ELECTRICAL STATE OF CALIFORNIA

THE STATE OF CALIFORNIA OR ITS OFFICERS OR AGENTS SHALL NOT BE RESPONSIBLE FOR THE ACCURACY OR COMPLETENESS OF SCANNED COPIES OF THIS PLAN SHEET.

NOTE:

1. FOR ACCURATE RIGHT OF WAY DATA, CONTACT RIGHT OF WAY ENGINEERING AT THE DISTRICT OFFICE.
2. MAINTAIN 10′ MINIMUM CLEARANCE FROM OVERHEAD ELECTRICAL UTILITY LINES.
3. ABOVE GRADE ELECTRICAL EQUIPMENT AND POLES MUST BE PLACED 15′ MINIMUM FROM ETW OR PROVIDE PROTECTION.
4. FOR POLE AND OVERHEAD CONDUCTOR DETAILS, SEE TRAFFIC HANDLING SHEETS.

LEGEND (THIS SHEET):

1. MESSENGER WIRE, 2#12 (FB), 2 DLC, 1#12 G.
2. 1½"C, 1-3CSC (PBA).
3. 2"C, 3 DLC, 1-3CSC (PBA).
4. MESSENGER WIRE, 2#12 (FB), 5 DLC, 1-3CSC (PBA), 1#12 G.
5. PROVIDE TYPE IV PHOTOELECTRIC CONTROL.
6. SPAN MOUNTED SIGNAL FACE.
7. MESSENGER WIRE, 2#12 (FB), 5 DLC, 1-3CSC (PBA), 4#12 (SIGNAL), 2#12 (Ltg) 1#12 G.
8. 2"C, 2#12 (FB), 5 DLC, 1-3CSC (PBA), 4#12 (SIGNAL), 2#12 (Ltg) 1#12 G.
9. 2"C, 2#12 (FB), 4 DLC, 1-3CSC (PBA), 1#12 G.
10. 2"C, 2#12 (FB), 2 DLC, 1#12 G.
11. MESSENGER WIRE, 2#12 (FB), 9 DLC, 2-3CSC (PBA), 8#12 (SIGNAL), 2#12 (Ltg), 1#12 G.
12. 2"C, 2#12 (FB), 9 DLC, 2-3CSC (PBA), 8#12 (SIGNAL), 2#12 (Ltg), 1#12 G.
13. 2"C, 3#6, 1#6 G.
14. SEE SHEET E-9 FOR DETAILS.
15. DEPARTMENT-FURNISHED 332 CABINET WITH BBS (2070 TRAFFIC SIGNAL CONTROLLER ASSEMBLY).
16. TYPE A SERVICE, 60 A, 240 V, 2P CB.

PHASE DIAGRAM

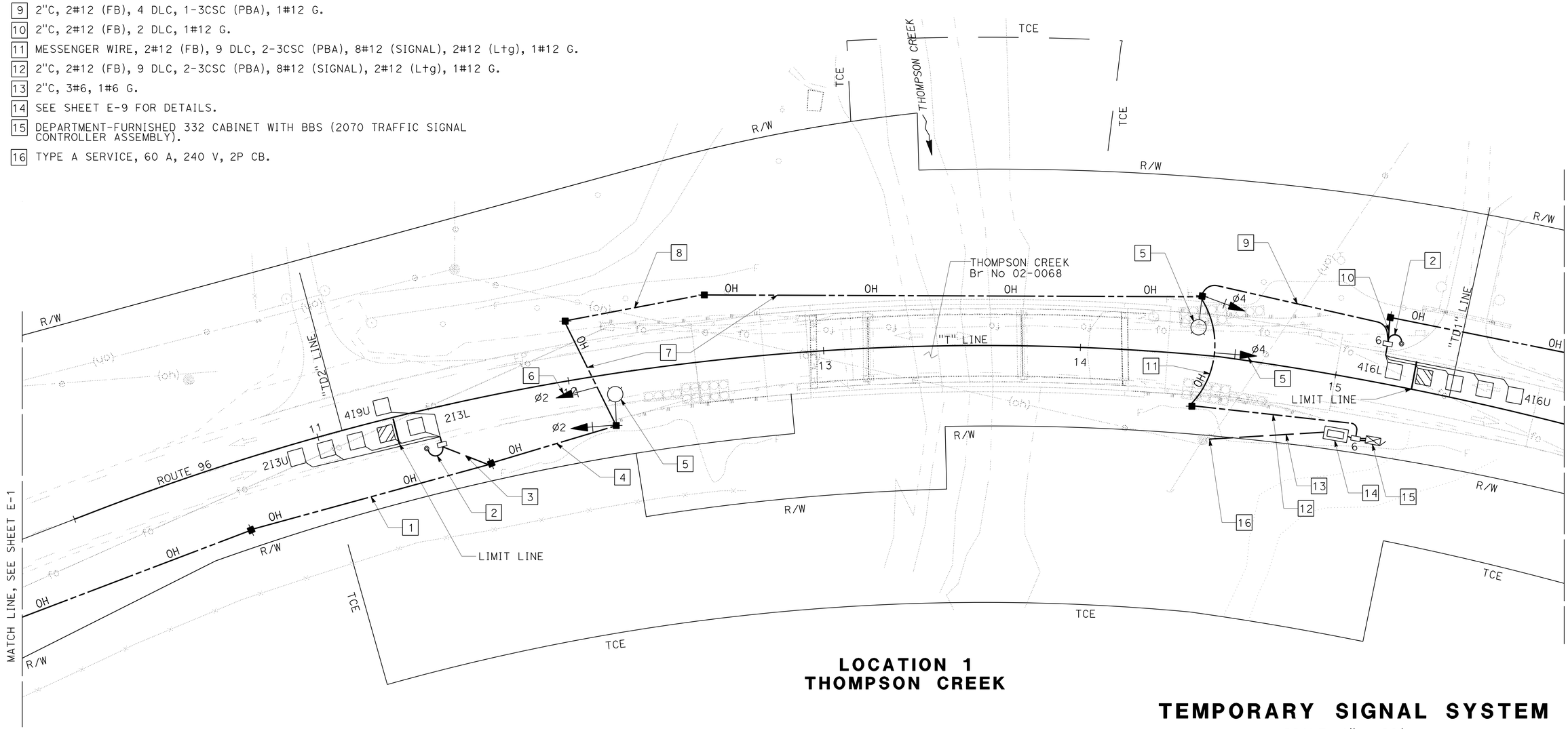

LOCATION 1
THOMPSON CREEK

APPROVED FOR ELECTRICAL WORK ONLY

TEMPORARY SIGNAL SYSTEM

SCALE: 1" = 20′

E-2

STATE OF CALIFORNIA - DEPARTMENT OF TRANSPORTATION
ELECTRICAL DESIGN

FUNCTIONAL SUPERVISOR: ROB STINGER
CALCULATED-DESIGNED BY: J.M. HANNIGAN
CHECKED BY: ARTURO ROBLES
REVISED BY / DATE REVISED

P:\proj1\02\4E650_plans\pse\24e650ua002.dgn

LAST REVISION / DATE PLOTTED => 22-AUG-2016 / TIME PLOTTED => 15:22

BORDER LAST REVISED 7/2/2010 | USERNAME => s115152 | DGN FILE => 24e650ua002.dgn | RELATIVE BORDER SCALE IS IN INCHES 0 1 2 3 | UNIT 0147 | PROJECT NUMBER & PHASE 02 1200 0012 1

Dist	COUNTY	ROUTE	POST MILES TOTAL PROJECT	SHEET No.	TOTAL SHEETS
02	Sis	96	R52.5/88.4	64	208

REGISTERED ELECTRICAL ENGINEER 06-09-16 DATE

06-15-16
PLANS APPROVAL DATE

REGISTERED PROFESSIONAL ENGINEER J.M. HANNIGAN No. E13665 Exp. 6-30-17 ELECTRICAL STATE OF CALIFORNIA

THE STATE OF CALIFORNIA OR ITS OFFICERS OR AGENTS SHALL NOT BE RESPONSIBLE FOR THE ACCURACY OR COMPLETENESS OF SCANNED COPIES OF THIS PLAN SHEET.

NOTE:

1. FOR ACCURATE RIGHT OF WAY DATA, CONTACT RIGHT OF WAY ENGINEERING AT THE DISTRICT OFFICE.
2. MAINTAIN 10′ MINIMUM CLEARANCE FROM OVERHEAD ELECTRICAL UTILITY LINES.
3. ABOVE GRADE ELECTRICAL EQUIPMENT AND POLES MUST BE PLACED 15′ MINIMUM FROM ETW OR PROVIDE PROTECTION.
4. FOR POLE AND OVERHEAD CONDUCTOR DETAILS, SEE TRAFFIC HANDLING SHEETS.

LEGEND (THIS SHEET):

1. MESSENGER WIRE, 2#12 (FB), 2 DLC, 1#12 G.
2. 1"C, DLC.
3. MESSENGER WIRE, 2#12 (FB), DLC, 1#12 G.
4. MESSENGER WIRE, 2#12 (FB), 1#12 G.

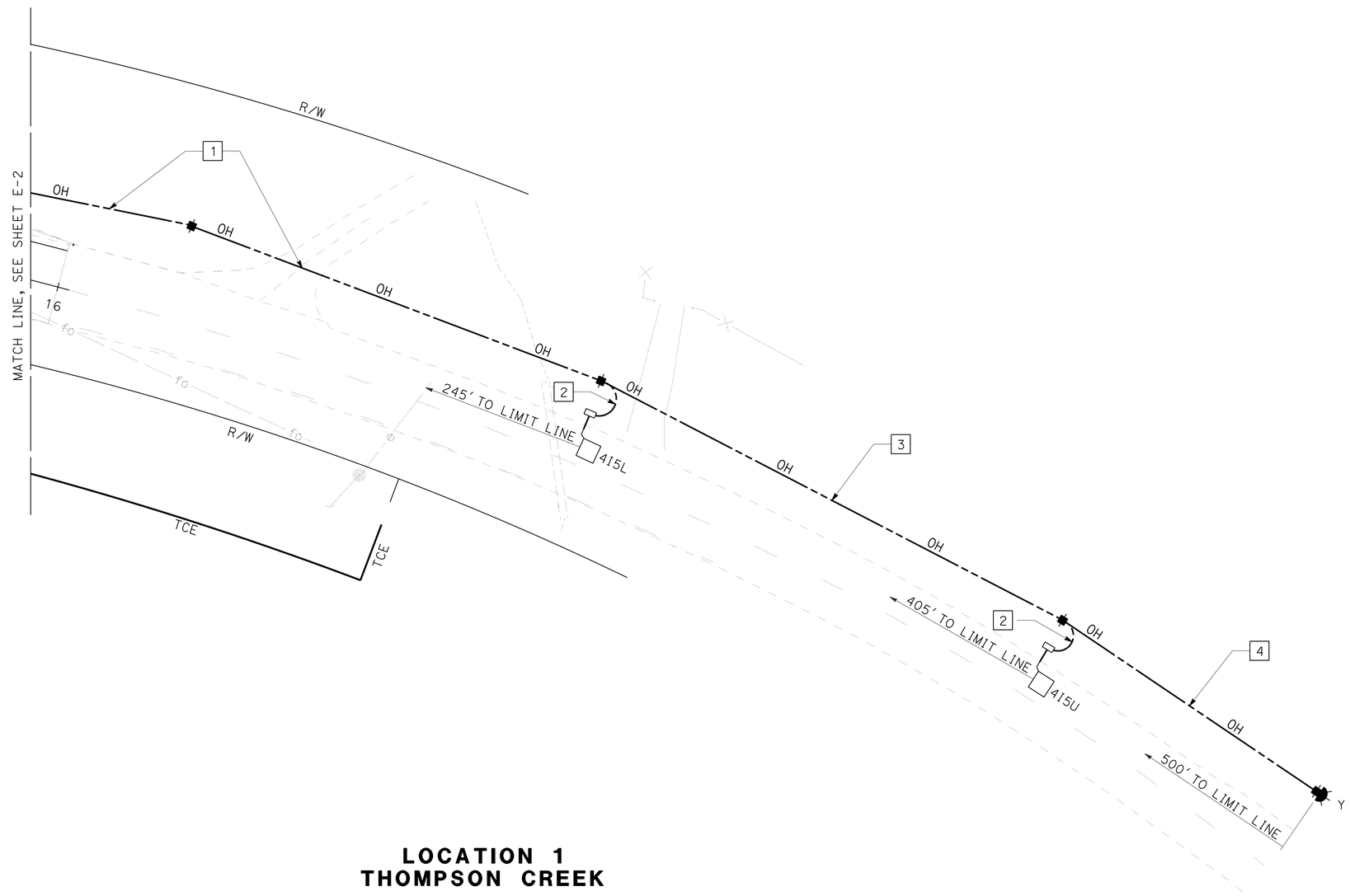

LOCATION 1
THOMPSON CREEK

TEMPORARY SIGNAL SYSTEM

SCALE: 1" = 20′

E-3

APPROVED FOR ELECTRICAL WORK ONLY

REVISED BY	DATE REVISED

CALCULATED-DESIGNED BY: J.M. HANNIGAN
CHECKED BY: ARTURO ROBLES
FUNCTIONAL SUPERVISOR: ROB STINGER

STATE OF CALIFORNIA - DEPARTMENT OF TRANSPORTATION
Caltrans® ELECTRICAL DESIGN

P:\proj1\02\4E650_plans\pse\24e650ua003.dgn

LAST REVISION DATE PLOTTED => 22-AUG-2016
TIME PLOTTED => 15:22

Dist	COUNTY	ROUTE	POST MILES TOTAL PROJECT	SHEET No.	TOTAL SHEETS
02	Sis	96	R52.5/88.4	65	208

J. Hannigan 06-09-16
REGISTERED ELECTRICAL ENGINEER DATE

06-15-16
PLANS APPROVAL DATE

REGISTERED PROFESSIONAL ENGINEER J.M. HANNIGAN No. E13665 Exp. 6-30-17 ELECTRICAL STATE OF CALIFORNIA

THE STATE OF CALIFORNIA OR ITS OFFICERS OR AGENTS SHALL NOT BE RESPONSIBLE FOR THE ACCURACY OR COMPLETENESS OF SCANNED COPIES OF THIS PLAN SHEET.

NOTE:

1. FOR ACCURATE RIGHT OF WAY DATA, CONTACT RIGHT OF WAY ENGINEERING AT THE DISTRICT OFFICE.
2. MAINTAIN 10′ MINIMUM CLEARANCE FROM OVERHEAD ELECTRICAL UTILITY LINES.
3. ABOVE GRADE ELECTRICAL EQUIPMENT AND POLES MUST BE PLACED 15′ MINIMUM FROM ETW OR PROVIDE PROTECTION.
4. FOR POLE AND OVERHEAD CONDUCTOR DETAILS, SEE TRAFFIC HANDLING SHEETS.

LEGEND (THIS SHEET):

1. PROVIDE TYPE IV PHOTOELECTRIC CONTROL.
2. MESSENGER WIRE, 2#12 (FB), 2#12 (Ltg), 1#12 G.
3. 2"C, 2#12 (FB), 2#12 (Ltg), 1#12 G.
4. SEE SHEET E-9 FOR DETAILS.
5. 2"C, 3#6, 1#6 G.
6. TYPE A SERVICE, 60 A, 240 V, 2P CB.

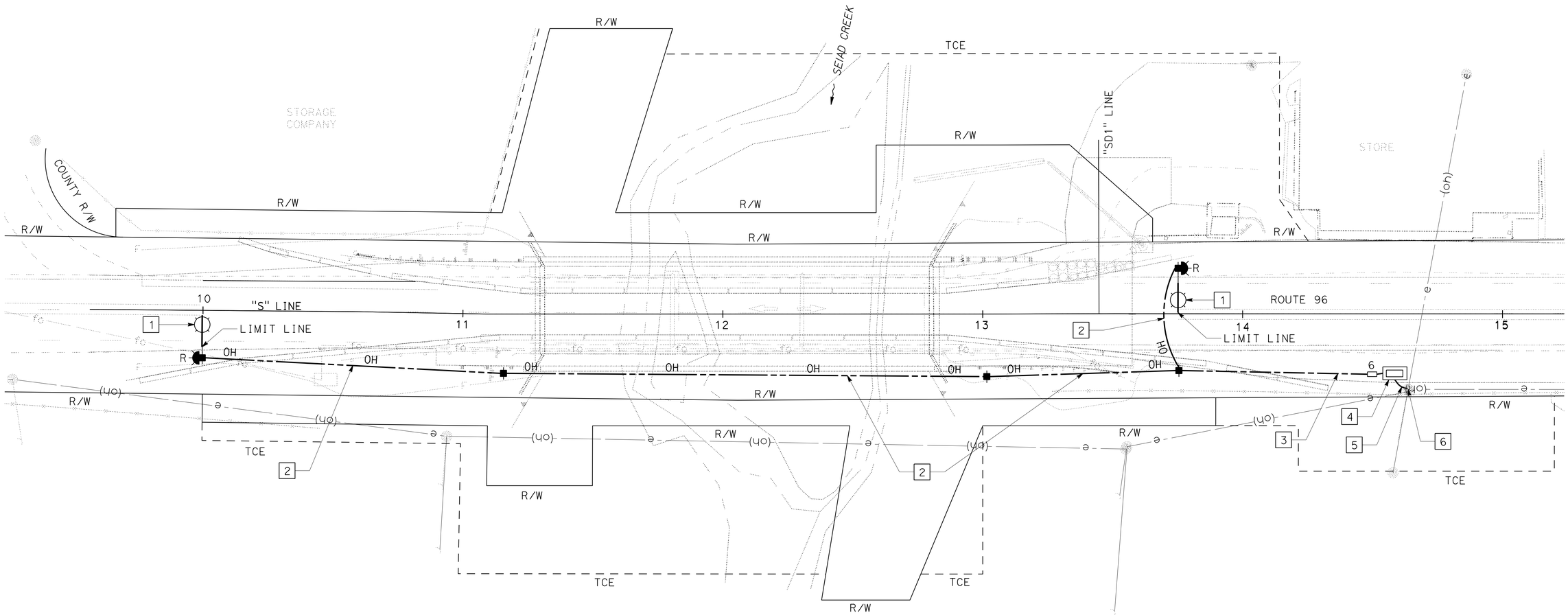

LOCATION 2
SEIAD CREEK

APPROVED FOR ELECTRICAL WORK ONLY

TEMPORARY FLASHING BEACON SYSTEM

SCALE: 1" = 20′

E-4

J.M. HANNIGAN — ARTURO ROBLES — ROB STINGER

STATE OF CALIFORNIA - DEPARTMENT OF TRANSPORTATION — Caltrans® ELECTRICAL DESIGN

REVISED BY | DATE REVISED | CALCULATED-DESIGNED BY | CHECKED BY | FUNCTIONAL SUPERVISOR

P:\proj1\02\4E650_plans\pse\24e650ua004.dgn

LAST REVISION | DATE PLOTTED => 22-AUG-2016 | TIME PLOTTED => 15:22

Dist	COUNTY	ROUTE	POST MILES TOTAL PROJECT	SHEET No.	TOTAL SHEETS
02	Sis	96	R52.5/88.4	66	208

REGISTERED ELECTRICAL ENGINEER 06-09-16 DATE

06-15-16
PLANS APPROVAL DATE

REGISTERED PROFESSIONAL ENGINEER J.M. HANNIGAN No. E13665 Exp. 6-30-17 ELECTRICAL STATE OF CALIFORNIA

THE STATE OF CALIFORNIA OR ITS OFFICERS OR AGENTS SHALL NOT BE RESPONSIBLE FOR THE ACCURACY OR COMPLETENESS OF SCANNED COPIES OF THIS PLAN SHEET.

NOTE:

1. FOR ACCURATE RIGHT OF WAY DATA, CONTACT RIGHT OF WAY ENGINEERING AT THE DISTRICT OFFICE.
2. MAINTAIN 10′ MINIMUM CLEARANCE FROM OVERHEAD ELECTRICAL UTILITY LINES.
3. ABOVE GRADE ELECTRICAL EQUIPMENT AND POLES MUST BE PLACED 15′ MINIMUM FROM ETW OR PROVIDE PROTECTION.
4. FOR POLE AND OVERHEAD CONDUCTOR DETAILS, SEE TRAFFIC HANDLING SHEETS.

LEGEND (THIS SHEET):

1. MESSENGER WIRE, 2#12 (FB), 1#12 G.
2. 1"C, DLC.
3. MESSENGER WIRE, 2#12 (FB), 1 DLC, 1#12 G.
4. MESSENGER WIRE, 2#12 (FB), 2 DLC, 1#12 G.

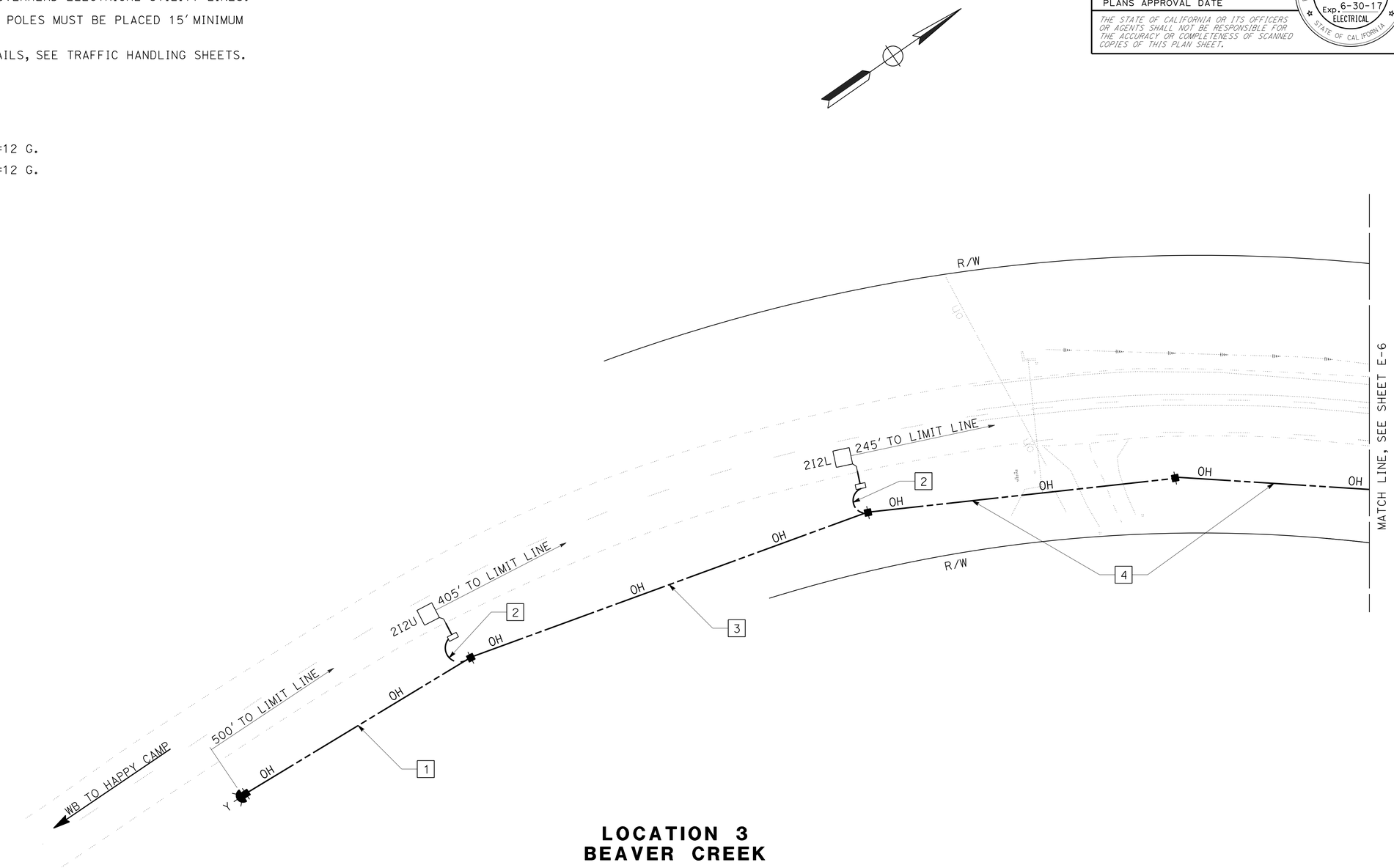

LOCATION 3
BEAVER CREEK

APPROVED FOR ELECTRICAL WORK ONLY

TEMPORARY SIGNAL SYSTEM

SCALE: 1" = 20′

E-5

REVISED BY	DATE REVISED

CALCULATED-DESIGNED BY: J.M. HANNIGAN
CHECKED BY: ARTURO ROBLES
FUNCTIONAL SUPERVISOR: ROB STINGER

STATE OF CALIFORNIA - DEPARTMENT OF TRANSPORTATION
Caltrans® ELECTRICAL DESIGN

P:\proj1\02\4E650_plans\pse\24e650ua005.dgn

LAST REVISION DATE PLOTTED => 22-AUG-2016
TIME PLOTTED => 15:22

Dist	COUNTY	ROUTE	POST MILES TOTAL PROJECT	SHEET No.	TOTAL SHEETS
02	Sis	96	R52.5/88.4	67	208

REGISTERED ELECTRICAL ENGINEER 06-09-16 DATE

06-15-16
PLANS APPROVAL DATE

REGISTERED PROFESSIONAL ENGINEER J.M. HANNIGAN No. E13665 Exp. 6-30-17 ELECTRICAL STATE OF CALIFORNIA

THE STATE OF CALIFORNIA OR ITS OFFICERS OR AGENTS SHALL NOT BE RESPONSIBLE FOR THE ACCURACY OR COMPLETENESS OF SCANNED COPIES OF THIS PLAN SHEET.

NOTE:

1. FOR ACCURATE RIGHT OF WAY DATA, CONTACT RIGHT OF WAY ENGINEERING AT THE DISTRICT OFFICE.
2. MAINTAIN 10′ MINIMUM CLEARANCE FROM OVERHEAD ELECTRICAL UTILITY LINES.
3. ABOVE GRADE ELECTRICAL EQUIPMENT AND POLES MUST BE PLACED 15′ MINIMUM FROM ETW OR PROVIDE PROTECTION.
4. FOR POLE AND OVERHEAD CONDUCTOR DETAILS, SEE TRAFFIC HANDLING SHEETS.

LEGEND (THIS SHEET):

1. 2"C, 2 DLC, 1-3CSC (PBA).
2. 1½"C, 1-3CSC (PBA).
3. MESSENGER WIRE, 2#12 (FB), 4 DLC, 1-3CSC (PBA), 1#12 G.
4. SPAN MOUNTED SIGNAL FACE.
5. MESSENGER WIRE, 2#12 (FB), 9 DLC, 2-3CSC (PBA), 12#12 (SIGNAL), 2#12 (Ltg), 1#12 G.
6. DEPARTMENT FURNISHED 332 CABINET WITH BBS (2070 TRAFFIC SIGNAL CONTROLLER ASSEMBLY).
7. SEE SHEET E-9 FOR DETAILS.
8. 3"C, 3#6 (POWER), 2#12 (FB), 9DLC, 2-3CSC (PBA), 12#12 (SIGNAL), 2#12 (Ltg), 1#6 G.
9. MESSENGER WIRE, 3#6 (POWER), 1#6 G.
10. 2"C, 3#6 (POWER), 1#6 G.
11. TYPE A SERVICE, 60 A, 240 V, 2P, CB.

PHASE DIAGRAM

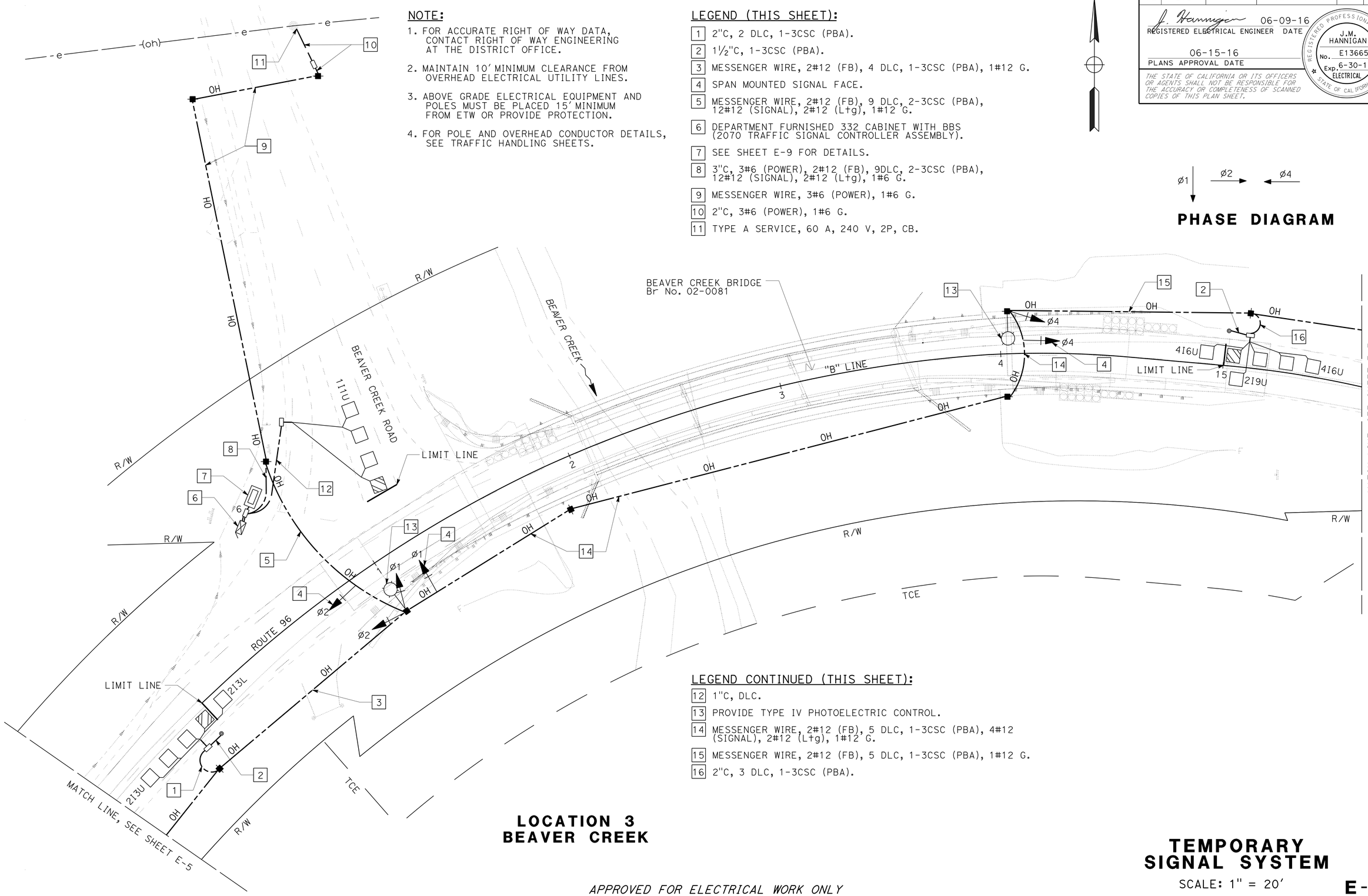

LEGEND CONTINUED (THIS SHEET):

12. 1"C, DLC.
13. PROVIDE TYPE IV PHOTOELECTRIC CONTROL.
14. MESSENGER WIRE, 2#12 (FB), 5 DLC, 1-3CSC (PBA), 4#12 (SIGNAL), 2#12 (Ltg), 1#12 G.
15. MESSENGER WIRE, 2#12 (FB), 5 DLC, 1-3CSC (PBA), 1#12 G.
16. 2"C, 3 DLC, 1-3CSC (PBA).

LOCATION 3
BEAVER CREEK

APPROVED FOR ELECTRICAL WORK ONLY

TEMPORARY SIGNAL SYSTEM

SCALE: 1" = 20′

E-6

REVISED BY | DATE REVISED
J.M. HANNIGAN | ARTURO ROBLES
CALCULATED-DESIGNED BY | CHECKED BY
FUNCTIONAL SUPERVISOR: ROB STINGER

STATE OF CALIFORNIA - DEPARTMENT OF TRANSPORTATION
Caltrans® ELECTRICAL DESIGN

P:\proj\02\4E650_plans\pse\24e650ua006.dgn

LAST REVISION | DATE PLOTTED => 22-AUG-2016 | TIME PLOTTED => 15:22

BORDER LAST REVISED 7/2/2010 | USERNAME => s115152 | DGN FILE => 24e650ua006.dgn | RELATIVE BORDER SCALE IS IN INCHES 0 1 2 3 | UNIT 0147 | PROJECT NUMBER & PHASE 02 1200 0012 1

Dist	COUNTY	ROUTE	POST MILES TOTAL PROJECT	SHEET No.	TOTAL SHEETS
02	Sis	96	R52.5/88.4	68	208

J. Hannigan 06-09-16
REGISTERED ELECTRICAL ENGINEER DATE

06-15-16
PLANS APPROVAL DATE

REGISTERED PROFESSIONAL ENGINEER J.M. HANNIGAN No. E13665 Exp. 6-30-17 ELECTRICAL STATE OF CALIFORNIA

THE STATE OF CALIFORNIA OR ITS OFFICERS OR AGENTS SHALL NOT BE RESPONSIBLE FOR THE ACCURACY OR COMPLETENESS OF SCANNED COPIES OF THIS PLAN SHEET.

NOTE:

1. FOR ACCURATE RIGHT OF WAY DATA, CONTACT RIGHT OF WAY ENGINEERING AT THE DISTRICT OFFICE.
2. MAINTAIN 10′ MINIMUM CLEARANCE FROM OVERHEAD ELECTRICAL UTILITY LINES.
3. ABOVE GRADE ELECTRICAL EQUIPMENT AND POLES MUST BE PLACED 15′ MINIMUM FROM ETW OR PROVIDE PROTECTION.
4. FOR POLE AND OVERHEAD CONDUCTOR DETAILS, SEE TRAFFIC HANDLING SHEETS.

LEGEND (THIS SHEET):

1. MESSENGER WIRE, 2#12 (FB), 2 DLC, 1#12 G.
2. 1"C, DLC.
3. MESSENGER WIRE, 2#12 (FB), DLC, 1#12 G.
4. MESSENGER WIRE, 2#12 (FB), 1#12 G.

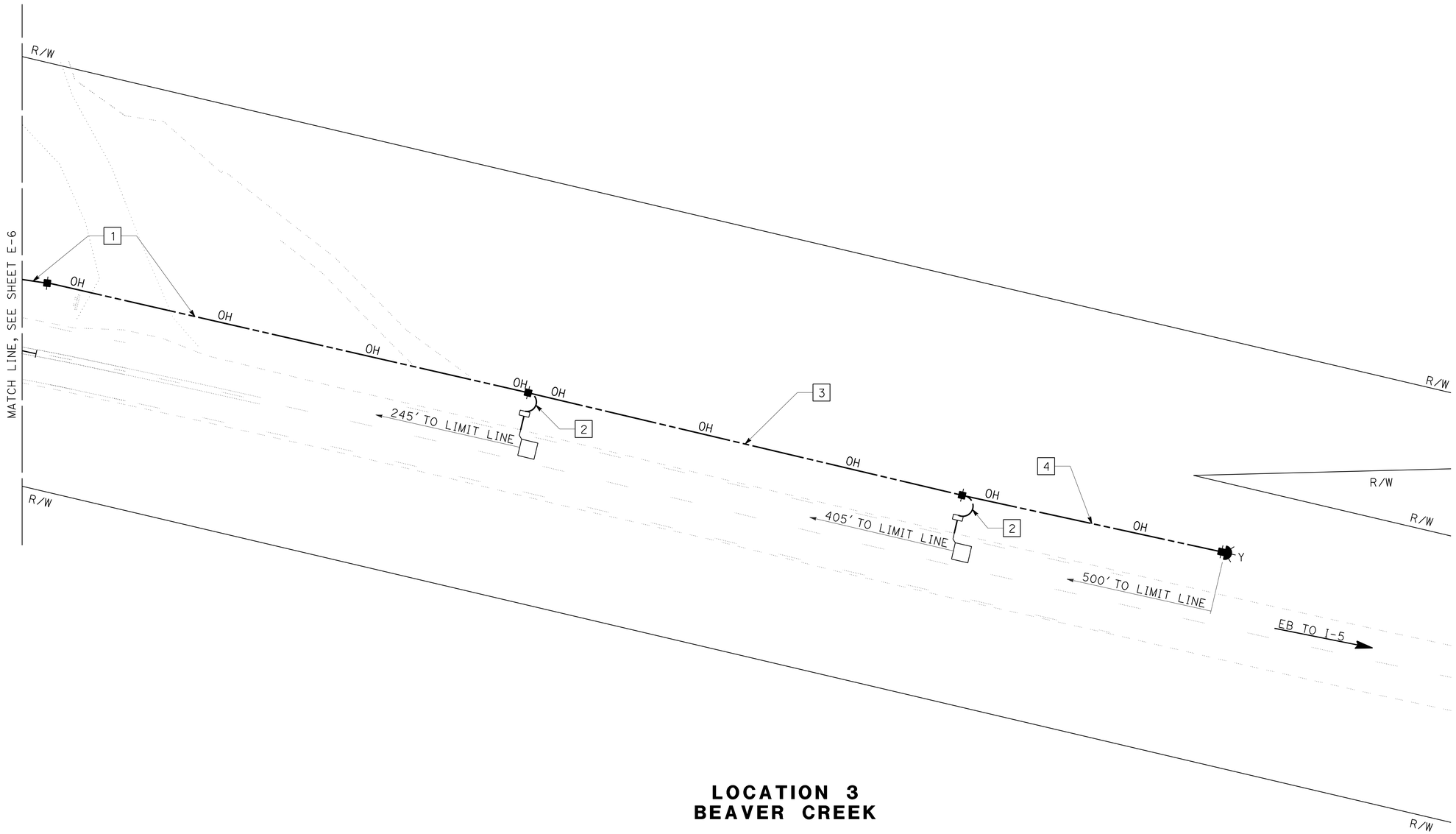

LOCATION 3
BEAVER CREEK

TEMPORARY SIGNAL SYSTEM

SCALE: 1" = 20′

E-7

APPROVED FOR ELECTRICAL WORK ONLY

STATE OF CALIFORNIA - DEPARTMENT OF TRANSPORTATION
Caltrans® ELECTRICAL DESIGN

FUNCTIONAL SUPERVISOR: ROB STINGER
CALCULATED-DESIGNED BY: J.M. HANNIGAN
CHECKED BY: ARTURO ROBLES
REVISED BY / DATE REVISED

P:\proj1\02\4E650_plans\pse\24e650ua007.dgn

LAST REVISION
DATE PLOTTED => 22-AUG-2016
TIME PLOTTED => 15:22

Dist	COUNTY	ROUTE	POST MILES TOTAL PROJECT	SHEET No.	TOTAL SHEETS
02	Sis	96	R52.5/88.4	69	208

REGISTERED ELECTRICAL ENGINEER 06-09-16 DATE

06-15-16
PLANS APPROVAL DATE

REGISTERED PROFESSIONAL ENGINEER J.M. HANNIGAN No. E13665 Exp. 6-30-17 ELECTRICAL STATE OF CALIFORNIA

THE STATE OF CALIFORNIA OR ITS OFFICERS OR AGENTS SHALL NOT BE RESPONSIBLE FOR THE ACCURACY OR COMPLETENESS OF SCANNED COPIES OF THIS PLAN SHEET.

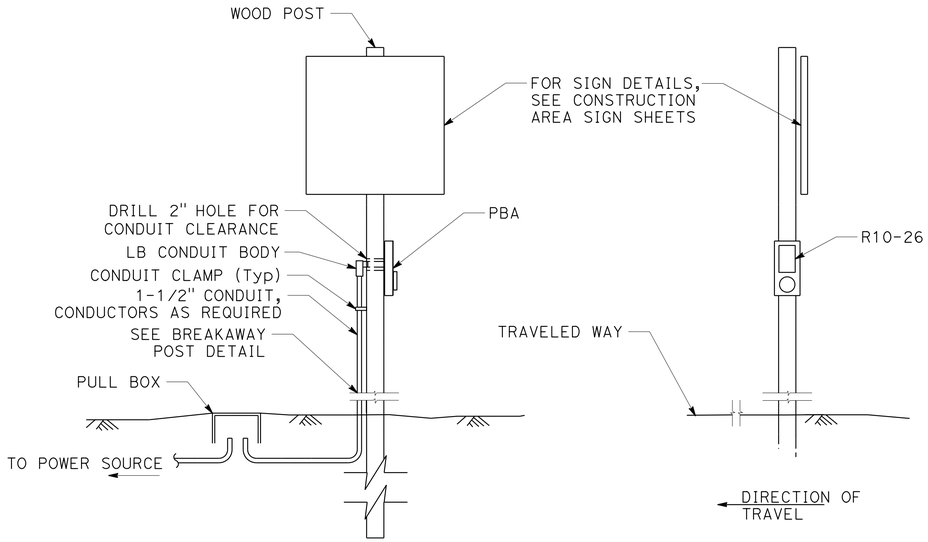

PEDESTRIAN PUSH BUTTON ASSEMBLY INSTALLATION

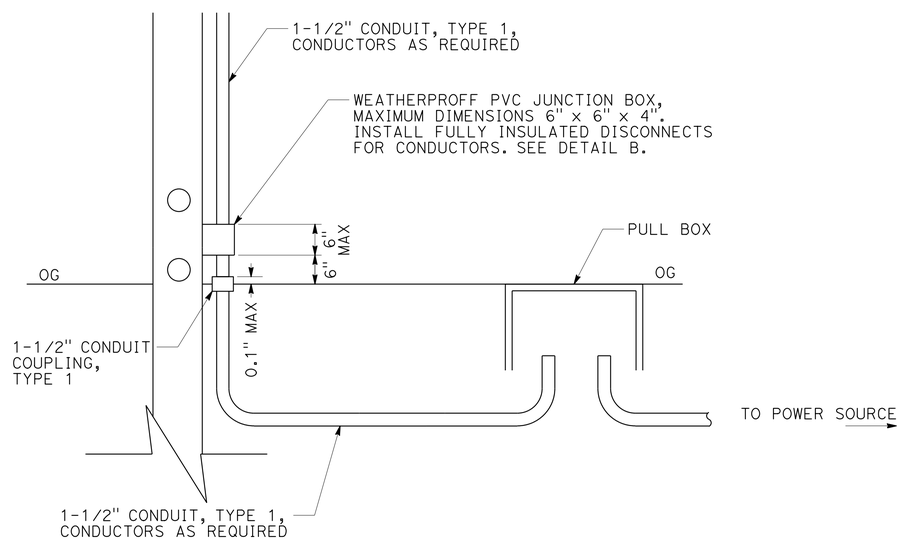

DETAIL A
BREAKAWAY POST
(CONDUIT CONNECTION)

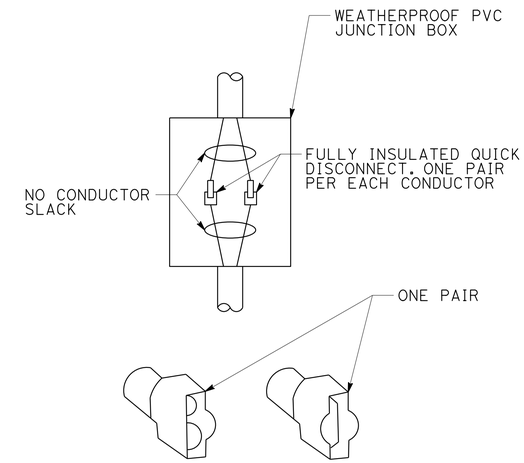

DETAIL B

ELECTRICAL DETAILS

NO SCALE

E-8

J.M. HANNIGAN — ARTURO ROBLES — ROB STINGER

STATE OF CALIFORNIA - DEPARTMENT OF TRANSPORTATION — Caltrans® ELECTRICAL DESIGN

CALCULATED-DESIGNED BY / CHECKED BY / FUNCTIONAL SUPERVISOR / REVISED BY / DATE REVISED

P:\proj1\02\4E650_plans\pse\24e650ua008.dgn

LAST REVISION / DATE PLOTTED => 22-AUG-2016 / TIME PLOTTED => 15:22

Dist	COUNTY	ROUTE	POST MILES TOTAL PROJECT	SHEET No.	TOTAL SHEETS
02	Sis	96	R52.5/88.4	70	208

REGISTERED ELECTRICAL ENGINEER 06-09-16 DATE

06-15-16
PLANS APPROVAL DATE

REGISTERED PROFESSIONAL ENGINEER J.M. HANNIGAN No. E13665 Exp. 6-30-17 ELECTRICAL STATE OF CALIFORNIA

THE STATE OF CALIFORNIA OR ITS OFFICERS OR AGENTS SHALL NOT BE RESPONSIBLE FOR THE ACCURACY OR COMPLETENESS OF SCANNED COPIES OF THIS PLAN SHEET.

NOTES (THIS SHEET):

1. FOR TEMPORARY SIGNAL SYSTEM:
   2"C, 2#6 (SIGNALS), 2#12 (LTG), 2#12 (FB), 1#6 G
   FOR TEMPORARY FLASHING BEACON SYSTEM:
   2"C, 2#12 (LTG), 2#12 (FB), 1#12G.
2. FOR TEMPORARY SIGNAL SYSTEM ONLY.
3. FOR LOCATION 3 (BEAVER CREEK), 2"C, 3#6, 1#6G ROUTED THROUGH PULL BOX.

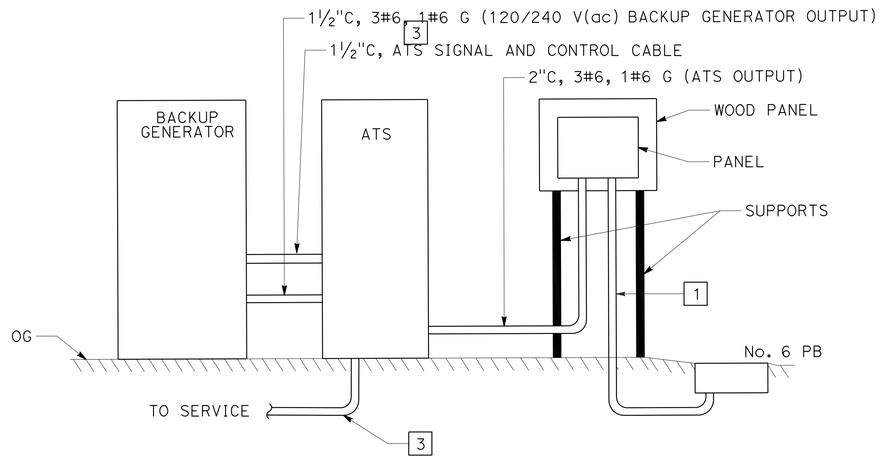

ATS AND GENERATOR

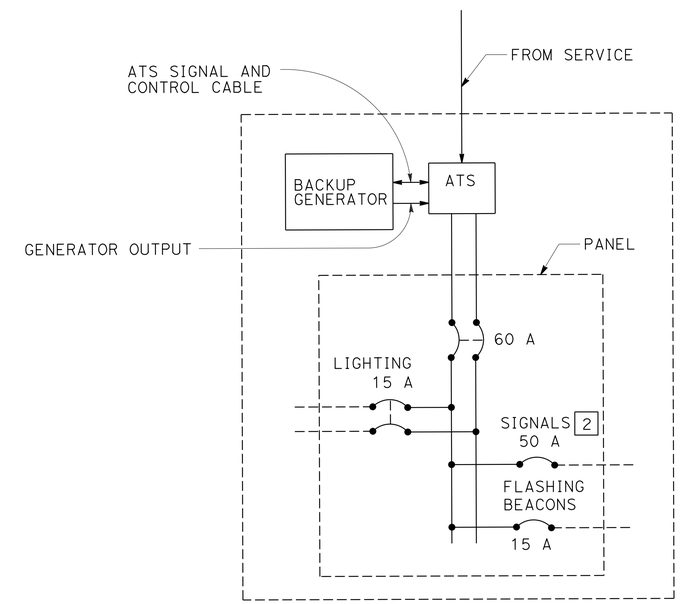

WIRING DIAGRAM

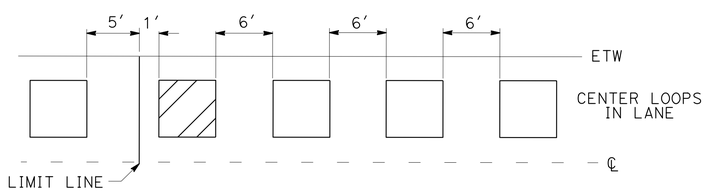

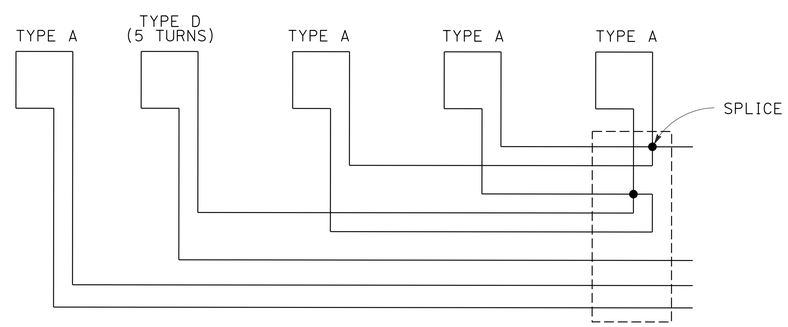

TYPE D/TYPE A LOOP ARRAY

ELECTRICAL DETAILS

NO SCALE

E-9

REVISED BY	DATE REVISED
J.M. HANNIGAN	ARTURO ROBLES
CALCULATED-DESIGNED BY	CHECKED BY
FUNCTIONAL SUPERVISOR	ROB STINGER

STATE OF CALIFORNIA - DEPARTMENT OF TRANSPORTATION
Caltrans® ELECTRICAL DESIGN

P:\proj1\02\4E650_plans\pse\24e650ua009.dgn

LAST REVISION DATE PLOTTED => 22-AUG-2016
TIME PLOTTED => 15:22

Dist	COUNTY	ROUTE	POST MILES TOTAL PROJECT	SHEET No.	TOTAL SHEETS
02	Sis	96	R52.5/88.4	71	208

J. Hannigan 06-09-16
REGISTERED ELECTRICAL ENGINEER DATE

06-15-16
PLANS APPROVAL DATE

REGISTERED PROFESSIONAL ENGINEER J.M. HANNIGAN No. E13665 Exp. 6-30-17 ELECTRICAL STATE OF CALIFORNIA

THE STATE OF CALIFORNIA OR ITS OFFICERS OR AGENTS SHALL NOT BE RESPONSIBLE FOR THE ACCURACY OR COMPLETENESS OF SCANNED COPIES OF THIS PLAN SHEET.

NOTE:

1. ITEMS SHOWN IN THESE TABLES ARE NOT SEPARATE PAY ITEMS, FOR INFORMATION ONLY.

TEMPORARY SIGNAL SYSTEM - LOCATION 1

SHEET No.	TRENCHING AND BACKFILL	1" TYPE 3 CONDUIT	2" TYPE 3 CONDUIT	3/8" MESSENGER WIRE	No. 5 PULL BOX	No. 6 PULL BOX	No. 12 CONDUCTOR	No. 12 GROUND	No. 6 CONDUCTOR	No. 6 GROUND	DLC	3CSC	PPA	TYPE A LOOP	TYPE D LOOP	VEHICLE SIGNAL HEAD	FLASHING BEACON (YELLOW)	ROADWAY 1 LUMINAIRE WITH 12' LMA	WOOD POST	WOOD POLE	TYPE A SERVICE	GENERATOR	ATS	PANELBOARD
	LF	LF	LF	LF	EA	EA	LF	LF	LF	LF	LF	LF	EA	EA	EA	EA	EA	EA	EA	EA	EA	EA	EA	EA
E-1	-	40	-	350	2	-	700	350	-	-	400	-	-	2	-	-	1	-	-	3	-	-	-	-
E-2	450	40	400	725	2	2	5240	900	150	50	4025	825	2	9	2	4	-	2	2	8	1	1	1	1
E-3	-	40	-	425	2	-	850	425	-	-	600	-	-	2	-	-	1	-	-	4	-	-	-	-

TEMPORARY FLASHING BEACON SYSTEM LOCATION 2

SHEET No.	TRENCHING AND BACKFILL	2" TYPE 3 CONDUIT	3/8" MESSENGER WIRE	No. 6 PULL BOX	No. 12 CONDUCTOR	No. 12 GROUND	No. 6 CONDUCTOR	No. 6 GROUND	FLASHING BEACON (RED)	ROADWAY 1 LUMINAIRE WITH 12' LMA	WOOD POLE	TYPE A SERVICE	GENERATOR	ATS	PANELBOARD
	LF	LF	LF	EA	LF	LF	LF	LF	EA	EA	EA	EA	EA	EA	EA
E-4	100	100	425	1	2000	500	75	25	2	2	5	1	1	1	1

TEMPORARY SIGNAL SYSTEM - LOCATION 3

SHEET No.	TRENCHING AND BACKFILL	1" TYPE 3 CONDUIT	2" TYPE 3 CONDUIT	3/8" MESSENGER WIRE	No. 5 PULL BOX	No. 6 PULL BOX	No. 12 CONDUCTOR	No. 12 GROUND	No. 6 CONDUCTOR	No. 6 GROUND	DLC	3CSC	PPA	TYPE A LOOP	TYPE D LOOP	VEHICLE SIGNAL HEAD	FLASHING BEACON (YELLOW)	ROADWAY 1 LUMINAIRE WITH 12' LMA	WOOD POST	WOOD POLE	TYPE A SERVICE	GENERATOR	ATS	PANELBOARD
	LF	LF	LF	LF	EA	EA	LF	LF	LF	LF	LF	LF	EA	EA	EA	EA	EA	EA	EA	EA	EA	EA	EA	EA
E-5	50	50	-	450	2	-	900	450	-	-	600	-	-	2	-	-	1	-	-	4	-	-	-	-
E-6	400	75	75	1000	4	1	5400	775	750	250	4100	875	2	9	2	6	-	2	2	9	1	1	1	1
E-7	50	50	-	475	2	-	950	475	-	-	600	-	-	2	-	-	1	-	-	4	-	-	-	-

ELECTRICAL QUANTITIES

E-10

REVISED BY	DATE REVISED
J.M. HANNIGAN	
ARTURO ROBLES	
CALCULATED-DESIGNED BY	
CHECKED BY	
FUNCTIONAL SUPERVISOR	
ROB STINGER	

STATE OF CALIFORNIA - DEPARTMENT OF TRANSPORTATION
Caltrans® ELECTRICAL DESIGN

P:\proj1\02\4E650_plans\pse\24e650ua010.dgn

LAST REVISION DATE PLOTTED => 22-AUG-2016
TIME PLOTTED => 15:22

M

Maint	MAINTENANCE
Max	MAXIMUM
MB	METAL BEAM
MBB	METAL BEAM BARRIER
MBGR	METAL BEAM GUARD RAILING
Med	MEDIAN
MGS	MIDWEST GUARDRAIL SYSTEM
MH	MANHOLE
Min	MINIMUM
Misc	MISCELLANEOUS
Misc I & S	MISCELLANEOUS IRON AND STEEL
Mkr	MARKER
Mod	MODIFIED,
	MODIFY
Mon	MONUMENT
MP	METAL PLATE
MPGR	METAL PLATE GUARD RAILING
MR	MOVEMENT RATING
MSE	MECHANICALLY STABILIZED EMBANKMENT
Mt	MOUNTAIN, MOUNT
Mtl	MATERIAL
MVP	MAINTENANCE VEHICLE PULLOUT

N

N	NORTH
NB	NORTHBOUND
No.	NUMBER (MUST HAVE PERIOD)
Nos.	NUMBERS (MUST HAVE PERIOD)
NPS	NOMINAL PIPE SIZE
NS	NEAR SIDE
NSP	NEW STANDARD PLAN
NTS	NOT TO SCALE

O

Oblr	OBLITERATE
OC	OVERCROSSING
OD	OUTSIDE DIAMETER
OF	OUTSIDE FACE
OG	ORIGINAL GROUND
OGAC	OPEN GRADED ASPHALT CONCRETE
OGFC	OPEN GRADED FRICTION COURSE
OH	OVERHEAD
OHWM	ORDINARY HIGH WATER MARK
O-O	OUT TO OUT
Opp	OPPOSITE
OSD	OVERSIDE DRAIN

P

p	PAGE
PAP	PERFORATED ALUMINUM PIPE
PB	PULL BOX
PC	POINT OF CURVATURE,
	PRECAST
PCC	POINT OF COMPOUND CURVE,
	PORTLAND CEMENT CONCRETE
PCMS	PORTABLE CHANGEABLE MESSAGE SIGN
PCP	PERFORATED CONCRETE PIPE,
	PRESTRESSED CONCRETE PIPE
PCVC	POINT OF COMPOUND VERTICAL CURVE
PEC	PERMIT TO ENTER AND CONSTRUCT
Ped	PEDESTRIAN
Ped OC	PEDESTRIAN OVERCROSSING
Ped UC	PEDESTRIAN UNDERCROSSING
Perm Mtl	PERMEABLE MATERIAL

P continued

PG	PROFILE GRADE
PI	POINT OF INTERSECTION
PJP	PARTIAL JOINT PENETRATION
Pkwy	PARKWAY
ℙL,PL	PLATE
P/L	PROPERTY LINE
PM	POST MILE,
	TIME FROM NOON TO MIDNIGHT
PN	PAVING NOTCH
POC	POINT OF HORIZONTAL CURVE
POT	POINT OF TANGENT
POVC	POINT OF VERTICAL CURVE
PP	PIPE PILE,
	PLASTIC PIPE,
	POWER POLE
PPL	PREFORMED PERMEABLE LINER
PPP	PERFORATED PLASTIC PIPE
PRC	POINT OF REVERSE CURVE
PRF	PAVEMENT REINFORCING FABRIC
PRVC	POINT OF REVERSE VERTICAL CURVE
PS&E	PLANS, SPECIFICATIONS AND ESTIMATES
PS, P/S	PRESTRESSED
PSP	PERFORATED STEEL PIPE
PT	POINT OF TANGENCY
PVC	POLYVINYL CHLORIDE
Pvmt	PAVEMENT

Q

Qty	QUANTITY

R

R	RADIUS
R & D	REMOVE AND DISPOSE
R & S	REMOVE AND SALVAGE
R/C	RATE OF CHANGE
RCA	REINFORCED CONCRETE ARCH
RCB	REINFORCED CONCRETE BOX
RCP	REINFORCED CONCRETE PIPE
RCPA	REINFORCED CONCRETE PIPE ARCH
Rd	ROAD
Reinf	REINFORCED,
	REINFORCEMENT,
	REINFORCING
Rel	RELOCATE
Repl	REPLACEMENT
Ret	RETAINING
Rev	REVISED, REVISION
Rdwy	ROADWAY
RHMA	RUBBERIZED HOT MIX ASPHALT
Riv	RIVER
RM	ROAD-MIXED
RP	RADIUS POINT,
	REFERENCE POINT
RR	RAILROAD
RSP	ROCK SLOPE PROTECTION,
	REVISED STANDARD PLAN
Rt	RIGHT
Rte	ROUTE
RW	REDWOOD,
	RETAINING WALL
R/W	RIGHT OF WAY
Rwy	RAILWAY

S

S	SOUTH,
	SUPPLEMENT
SAE	STRUCTURE APPROACH EMBANKMENT
Salv	SALVAGE
SAPP	STRUCTURAL ALUMINUM PLATE PIPE
SB	SOUTHBOUND
SC	SAND CUSHION
SCSP	SLOTTED CORRUGATED STEEL PIPE
SD	STORM DRAIN
Sec	SECOND,
	SECTION
Sep	SEPARATION
SG	SUBGRADE
Shld	SHOULDER
Sht	SHEET
Sim	SIMILAR
℄	STATION LINE
SM	SELECTED MATERIAL
Spec	SPECIAL,
	SPECIFICATIONS
SPP	SLOTTED PLASTIC PIPE
SS	SLOPE STAKE
SSBM	STRAP AND SADDLE BRACKET METHOD
SSD	STRUCTURAL SECTION DRAIN
SSPA	STRUCTURAL STEEL PLATE ARCH
SSPP	STRUCTURAL STEEL PLATE PIPE
SSPPA	STRUCTURAL STEEL PLATE PIPE ARCH
SSRP	STEEL SPIRAL RIB PIPE
St	STREET
Sta	STATION
STBB	SINGLE THRIE BEAM BARRIER
Std	STANDARD
Str	STRUCTURE
Surf	SURFACING
SW	SIDEWALK,
	SOUND WALL
Swr	SEWER
Sym	SYMMETRICAL
S4S	SURFACE 4 SIDES

T

T	SEMI-TANGENT
Tan	TANGENT
TBB	THRIE BEAM BARRIER
Tbr	TIMBER
TC	TOP OF CURB
TCB	TRAFFIC CONTROL BOX
TCE	TEMPORARY CONSTRUCTION EASEMENT
Tel	TELEPHONE
Temp	TEMPORARY
TG	TOP OF GRADE
Tot	TOTAL
TP	TELEPHONE POLE
TPB	TREATED PERMEABLE BASE
TPM	TREATED PERMEABLE MATERIAL
Trans	TRANSITION

T continued

TS	TRANSVERSE,
	TRAFFIC SIGNAL,
	TUBULAR STEEL
Typ	TYPICAL

U

UC	UNDERCROSSING
UD	UNDERDRAIN
UG	UNDERGROUND
UON	UNLESS OTHERWISE NOTED
UP	UNDERPASS

V

V	VALVE,
	DESIGN SPEED
Var	VARIABLE,
	VARIES
VC	VERTICAL CURVE
VCP	VITRIFIED CLAY PIPE
Vert	VERTICAL
Via	VIADUCT
Vol	VOLUME

W

W	WEST,
	WIDTH
WB	WESTBOUND
WH	WEEP HOLE
WM	WIRE MESH
WS	WATER SURFACE
WSP	WELDED STEEL PIPE
Wt	WEIGHT
WV	WATER VALVE
WW	WINGWALL
WWLOL	WINGWALL LAYOUT LINE

X

X Sec	CROSS SECTION
Xing	CROSSING

Y

Yr	YEAR
Yrs	YEARS

Dist	COUNTY	ROUTE	POST MILES TOTAL PROJECT	SHEET No.	TOTAL SHEETS
02	Sis	96	R52.5/88.4	72	208

Grace M. Tsushima
REGISTERED CIVIL ENGINEER

July 19, 2013
PLANS APPROVAL DATE

REGISTERED PROFESSIONAL ENGINEER Grace M. Tsushima No. C49814 Exp. 9-30-14 CIVIL STATE OF CALIFORNIA

THE STATE OF CALIFORNIA OR ITS OFFICERS OR AGENTS SHALL NOT BE RESPONSIBLE FOR THE ACCURACY OR COMPLETENESS OF SCANNED COPIES OF THIS PLAN SHEET.

TO ACCOMPANY PLANS DATED 06-15-16

2010 REVISED STANDARD PLAN RSP A10B

UNIT OF MEASUREMENT SYMBOLS:

Some of the symbols used in the project plan quantity tables and in the Bid Item List are:

TABLE A

SYMBOL USED	DEFINITIONS
ACRE	ACRE
CF	CUBIC FOOT
CY	CUBIC YARD
EA	EACH
GAL	GALLON
LB	POUND
LF	LINEAR FOOT
SQFT	SQUARE FOOT
SQYD	SQUARE YARD
STA	100 FEET
TAB	TABLET
TON	2,000 POUNDS

Some of the symbols used in the plans other than in the project plan quantity tables are:

TABLE B

SYMBOL USED	DEFINITIONS
ksi	KIPS PER SQUARE INCH
ksf	KIPS PER SQUARE FOOT
psi	POUNDS PER SQUARE INCH
psf	POUNDS PER SQUARE FOOT
lb/ft^3, pcf	POUNDS PER CUBIC FOOT
tsf	TONS PER SQUARE FOOT
mph, MPH *	MILES PER HOUR
ø	NOMINAL DIAMETER
oz	OUNCE
lb	POUND
kip	1,000 POUNDS
cal	CALORIE
ft	FOOT OR FEET
gal	GALLON

* For use on a sign panel only

STATE OF CALIFORNIA
DEPARTMENT OF TRANSPORTATION

ABBREVIATIONS (SHEET 2 OF 2)

NO SCALE

RSP A10B DATED JULY 19, 2013 SUPERSEDES STANDARD PLAN A10B DATED MAY 20, 2011 - PAGE 2 OF THE STANDARD PLANS BOOK DATED 2010.

REVISED STANDARD PLAN RSP A10B

DATE PLOTTED => 22-AUG-2016
TIME PLOTTED => 15:22

REFERENCE: CALTRANS SOIL & ROCK LOGGING, CLASSIFICATION, AND PRESENTATION MANUAL (2010)

Dist	COUNTY	ROUTE	POST MILES TOTAL PROJECT	SHEET No.	TOTAL SHEETS
02	Sis	96	R52.5/88.4	73	208

CERTIFIED ENGINEERING GEOLOGIST

October 30, 2015
PLANS APPROVAL DATE

REGISTERED GEOLOGIST
CHRIS A. RISDEN
CERTIFIED ENGINEERING GEOLOGIST
No. 2541
Exp. 9-30-17
STATE OF CALIFORNIA

THE STATE OF CALIFORNIA OR ITS OFFICERS OR AGENTS SHALL NOT BE RESPONSIBLE FOR THE ACCURACY OR COMPLETENESS OF SCANNED COPIES OF THIS PLAN SHEET.

TO ACCOMPANY PLANS DATED 06-15-16

ABBREVIATION:

GWS = Ground Water Surface

CEMENTATION

DESCRIPTION	CRITERIA
WEAK	CRUMBLES OR BREAKS WITH HANDLING OR LITTLE FINGER PRESSURE.
MODERATE	CRUMBLES OR BREAKS WITH CONSIDERABLE FINGER PRESSURE.
STRONG	WILL NOT CRUMBLE OR BREAK WITH FINGER PRESSURE.

BOREHOLE IDENTIFICATION

SYMBOL	HOLE TYPE	DESCRIPTION
Size	A	AUGER BORING (HOLLOW OR SOLID STEM BUCKET)
Size	R RW RC P	ROTARY DRILLED BORING (CONVENTIONAL) ROTARY DRILLED WITH SELF-CASING WIRE-LINE ROTARY CORE WITH CONTINUOUSLY-SAMPLED, SELF-CASING WIRE-LINE ROTARY PERCUSSION BORING (AIR)
Size	R RC	ROTARY DRILLED DIAMOND CORE ROTARY DRILLED DIAMOND CORE, CONTINUOUSLY SAMPLED
Size	HD HA	HAND DRIVEN (1-INCH SOIL TUBE) HAND AUGER
●	D	DYNAMIC CONE PENETRATION BORING
▲	CPT	CONE PENETRATION TEST (ASTM D 5778)
[ ]	O	OTHER (NOTE ON LOTB)

Note: Size in inches.

CONSISTENCY OF COHESIVE SOILS

DESCRIPTION	SHEAR STRENGTH (tsf)	POCKET PENETROMETER MEASUREMENT, PP, (tsf)	TORVANE MEASUREMENT, TV, (tsf)	VANE SHEAR MEASUREMENT, VS, (tsf)
VERY SOFT	LESS THAN 0.12	LESS THAN 0.25	LESS THAN 0.12	LESS THAN 0.12
SOFT	0.12 - 0.25	0.25 - 0.5	0.12 - 0.25	0.12 - 0.25
MEDIUM STIFF	0.25 - 0.5	0.5 - 1	0.25 - 0.5	0.25 - 0.5
STIFF	0.5 - 1	1 - 2	0.5 - 1	0.5 - 1
VERY STIFF	1 - 2	2 - 4	1 - 2	1 - 2
HARD	GREATER THAN 2	GREATER THAN 4	GREATER THAN 2	GREATER THAN 2

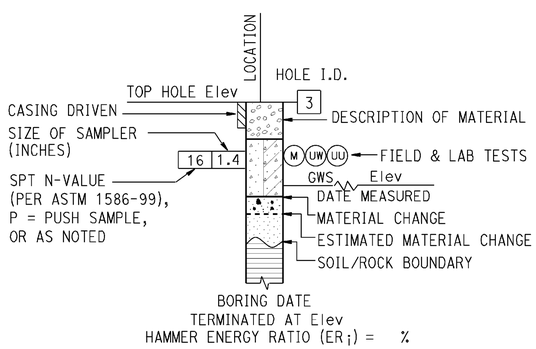

ROTARY BORING

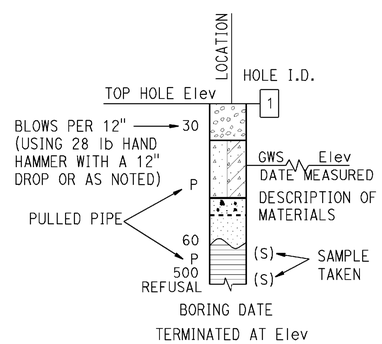

HAND BORING

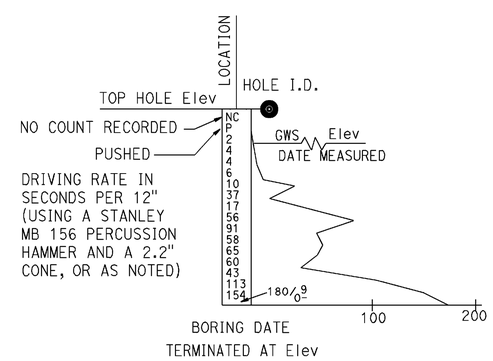

DYNAMIC CONE PENETRATION BORING

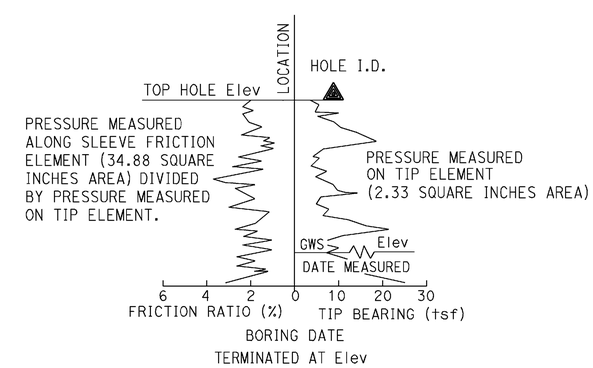

CONE PENETRATION TEST (CPT) BORING

STATE OF CALIFORNIA
DEPARTMENT OF TRANSPORTATION

LEGEND - SOIL (SHEET 1 OF 2)

NO SCALE

RSP A10F DATED OCTOBER 30, 2015 SUPERSEDES STANDARD PLAN A10F DATED MAY 20, 2011 - PAGE 6 OF THE STANDARD PLANS BOOK DATED 2010.

REVISED STANDARD PLAN RSP A10F

2010 REVISED STANDARD PLAN RSP A10F

DATE PLOTTED => 22-AUG-2016
TIME PLOTTED => 15:22

Dist	COUNTY	ROUTE	POST MILES TOTAL PROJECT	SHEET No.	TOTAL SHEETS
02	Sis	96	R52.5/88.4	74	208

CERTIFIED ENGINEERING GEOLOGIST

October 30, 2015
PLANS APPROVAL DATE

REGISTERED GEOLOGIST — CHRIS A. RISDEN — CERTIFIED ENGINEERING GEOLOGIST — No. 2541 Exp. 9-30-17 — STATE OF CALIFORNIA

THE STATE OF CALIFORNIA OR ITS OFFICERS OR AGENTS SHALL NOT BE RESPONSIBLE FOR THE ACCURACY OR COMPLETENESS OF SCANNED COPIES OF THIS PLAN SHEET.

TO ACCOMPANY PLANS DATED 06-15-16

REFERENCE: CALTRANS SOIL & ROCK LOGGING, CLASSIFICATION, AND PRESENTATION MANUAL (2010)

GROUP SYMBOLS AND NAMES

GRAPHIC/SYMBOL	GROUP NAMES
GW	WELL-GRADED GRAVEL WELL-GRADED GRAVEL WITH SAND
GP	POORLY-GRADED GRAVEL POORLY-GRADED GRAVEL WITH SAND
GW-GM	WELL-GRADED GRAVEL WITH SILT WELL-GRADED GRAVEL WITH SILT AND SAND
GW-GC	WELL-GRADED GRAVEL WITH CLAY (OR SILTY CLAY) WELL-GRADED GRAVEL WITH CLAY AND SAND (OR SILTY CLAY AND SAND)
GP-GM	POORLY-GRADED GRAVEL WITH SILT POORLY-GRADED GRAVEL WITH SILT AND SAND
GP-GC	POORLY-GRADED GRAVEL WITH CLAY (OR SILTY CLAY) POORLY-GRADED GRAVEL WITH CLAY AND SAND (OR SILTY CLAY AND SAND)
GM	SILTY GRAVEL SILTY GRAVEL WITH SAND
GC	CLAYEY GRAVEL CLAYEY GRAVEL WITH SAND
GC-GM	SILTY, CLAYEY GRAVEL SILTY, CLAYEY GRAVEL WITH SAND
SW	WELL-GRADED SAND WELL-GRADED SAND WITH GRAVEL
SP	POORLY-GRADED SAND POORLY-GRADED SAND WITH GRAVEL
SW-SM	WELL-GRADED SAND WITH SILT WELL-GRADED SAND WITH SILT AND GRAVEL
SW-SC	WELL-GRADED SAND WITH CLAY (OR SILTY CLAY) WELL-GRADED SAND WITH CLAY AND GRAVEL (OR SILTY CLAY AND GRAVEL)
SP-SM	POORLY-GRADED SAND WITH SILT POORLY-GRADED SAND WITH SILT AND GRAVEL
SP-SC	POORLY-GRADED SAND WITH CLAY (OR SILTY CLAY) POORLY-GRADED SAND WITH CLAY AND GRAVEL (OR SILTY CLAY AND GRAVEL)
SM	SILTY SAND SILTY SAND WITH GRAVEL
SC	CLAYEY SAND CLAYEY SAND WITH GRAVEL
SC-SM	SILTY, CLAYEY SAND SILTY, CLAYEY SAND WITH GRAVEL
PT	PEAT
	COBBLES COBBLES AND BOULDERS BOULDERS

GRAPHIC/SYMBOL	GROUP NAMES
CL	LEAN CLAY LEAN CLAY WITH SAND LEAN CLAY WITH GRAVEL SANDY LEAN CLAY SANDY LEAN CLAY WITH GRAVEL GRAVELLY LEAN CLAY GRAVELLY LEAN CLAY WITH SAND
CL-ML	SILTY CLAY SILTY CLAY WITH SAND SILTY CLAY WITH GRAVEL SANDY SILTY CLAY SANDY SILTY CLAY WITH GRAVEL GRAVELLY SILTY CLAY GRAVELLY SILTY CLAY WITH SAND
ML	SILT SILT WITH SAND SILT WITH GRAVEL SANDY SILT SANDY SILT WITH GRAVEL GRAVELLY SILT GRAVELLY SILT WITH SAND
OL	ORGANIC LEAN CLAY ORGANIC LEAN CLAY WITH SAND ORGANIC LEAN CLAY WITH GRAVEL SANDY ORGANIC LEAN CLAY SANDY ORGANIC LEAN CLAY WITH GRAVEL GRAVELLY ORGANIC LEAN CLAY GRAVELLY ORGANIC LEAN CLAY WITH SAND
OL	ORGANIC SILT ORGANIC SILT WITH SAND ORGANIC SILT WITH GRAVEL SANDY ORGANIC SILT SANDY ORGANIC SILT WITH GRAVEL GRAVELLY ORGANIC SILT GRAVELLY ORGANIC SILT WITH SAND
CH	FAT CLAY FAT CLAY WITH SAND FAT CLAY WITH GRAVEL SANDY FAT CLAY SANDY FAT CLAY WITH GRAVEL GRAVELLY FAT CLAY GRAVELLY FAT CLAY WITH SAND
MH	ELASTIC SILT ELASTIC SILT WITH SAND ELASTIC SILT WITH GRAVEL SANDY ELASTIC SILT SANDY ELASTIC SILT WITH GRAVEL GRAVELLY ELASTIC SILT GRAVELLY ELASTIC SILT WITH SAND
OH	ORGANIC FAT CLAY ORGANIC FAT CLAY WITH SAND ORGANIC FAT CLAY WITH GRAVEL SANDY ORGANIC FAT CLAY SANDY ORGANIC FAT CLAY WITH GRAVEL GRAVELLY ORGANIC FAT CLAY GRAVELLY ORGANIC FAT CLAY WITH SAND
OH	ORGANIC ELASTIC SILT ORGANIC ELASTIC SILT WITH SAND ORGANIC ELASTIC SILT WITH GRAVEL SANDY ORGANIC ELASTIC SILT SANDY ORGANIC ELASTIC SILT WITH GRAVEL GRAVELLY ORGANIC ELASTIC SILT GRAVELLY ORGANIC ELASTIC SILT WITH SAND
OL/OH	ORGANIC SOIL ORGANIC SOIL WITH SAND ORGANIC SOIL WITH GRAVEL SANDY ORGANIC SOIL SANDY ORGANIC SOIL WITH GRAVEL GRAVELLY ORGANIC SOIL GRAVELLY ORGANIC SOIL WITH SAND

FIELD AND LABORATORY TESTING

- (C) CONSOLIDATION (ASTM D2435)
- (CL) COLLAPSE POTENTIAL (ASTM D4546)
- (CP) COMPACTION CURVE (CTM 216)
- (CR) CORROSIVITY TESTING (CTM 643, CTM 422, CTM 417)
- (CU) CONSOLIDATED UNDRAINED TRIAXIAL (ASTM D4767)
- (DS) DIRECT SHEAR (ASTM D3080)
- (EI) EXPANSION INDEX (ASTM D4829)
- (M) MOISTURE CONTENT (ASTM D2216)
- (OC) ORGANIC CONTENT-% (ASTM D2974)
- (P) PERMEABILITY (CTM 220)
- (PA) PARTICLE SIZE ANALYSIS (ASTM D422)
- (PI) PLASTICITY INDEX (AASHTO T 90) LIQUID LIMIT (AASHTO T 89)
- (PL) POINT LOAD INDEX (ASTM D5731)
- (PM) PRESSURE METER
- (R) R-VALUE (CTM 301)
- (SE) SAND EQUIVALENT (CTM 217)
- (SG) SPECIFIC GRAVITY (AASHTO T 100)
- (SL) SHRINKAGE LIMIT (ASTM D4943)
- (SW) SWELL POTENTIAL (ASTM D4546)
- (UC) UNCONFINED COMPRESSION-SOIL (ASTM D2166) UNCONFINED COMPRESSION-ROCK (ASTM D7012 - METHOD C)
- (UU) UNCONSOLIDATED UNDRAINED TRIAXIAL (ASTM D2850)
- (UW) UNIT WEIGHT (ASTM D7263 - METHOD B)

APPARENT DENSITY OF COHESIONLESS SOILS

DESCRIPTION	SPT N_{60} (BLOWS / 12 INCHES)
VERY LOOSE	0 - 5
LOOSE	5 - 10
MEDIUM DENSE	10 - 30
DENSE	30 - 50
VERY DENSE	GREATER THAN 50

MOISTURE

DESCRIPTION	CRITERIA
DRY	NO DISCERNABLE MOISTURE
MOIST	MOISTURE PRESENT, BUT NO FREE WATER
WET	VISIBLE FREE WATER

PERCENT OR PROPORTION OF SOILS

DESCRIPTION	CRITERIA
TRACE	PARTICLES ARE PRESENT BUT ESTIMATED TO BE LESS THAN 5%
FEW	5% - 10%
LITTLE	15% - 25%
SOME	30% - 45%
MOSTLY	50% - 100%

PARTICLE SIZE

DESCRIPTION		SIZE
BOULDER		GREATER THAN 12"
COBBLE		3" - 12"
GRAVEL	COARSE	3/4" - 3"
	FINE	1/5" - 3/4"
SAND	COARSE	1/16" - 1/5"
	MEDIUM	1/64" - 1/16"
	FINE	1/300" - 1/64"
SILT AND CLAY		LESS THAN 1/300"

STATE OF CALIFORNIA
DEPARTMENT OF TRANSPORTATION

LEGEND - SOIL (SHEET 2 OF 2)

NO SCALE

RSP A10G DATED OCTOBER 30, 2015 SUPERSEDES STANDARD PLAN A10G DATED MAY 20, 2011 - PAGE 7 OF THE STANDARD PLANS BOOK DATED 2010.

REVISED STANDARD PLAN RSP A10G

2010 REVISED STANDARD PLAN RSP A10G

DATE PLOTTED => 22-AUG-2016
TIME PLOTTED => 15:23

Dist	COUNTY	ROUTE	POST MILES TOTAL PROJECT	SHEET No.	TOTAL SHEETS
02	Sis	96	R52.5/88.4	75	208

REGISTERED CIVIL ENGINEER

July 20, 2012
PLANS APPROVAL DATE

REGISTERED PROFESSIONAL ENGINEER
Roberta L. McLaughlin
No. C40375
Exp. 3-31-13
CIVIL
STATE OF CALIFORNIA

THE STATE OF CALIFORNIA OR ITS OFFICERS OR AGENTS SHALL NOT BE RESPONSIBLE FOR THE ACCURACY OR COMPLETENESS OF SCANNED COPIES OF THIS PLAN SHEET.

TO ACCOMPANY PLANS DATED 06-15-16

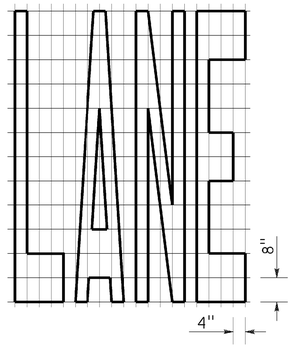

A=24 ft^2

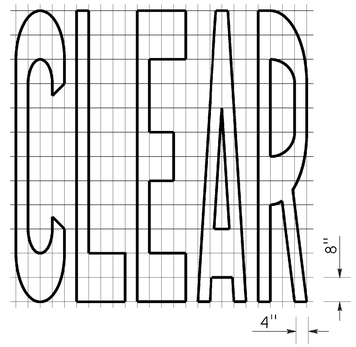

A=27 ft^2

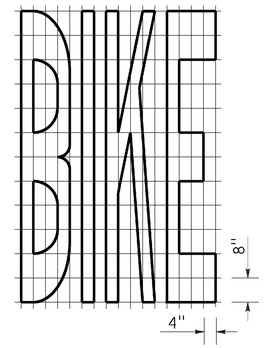

A=21 ft^2

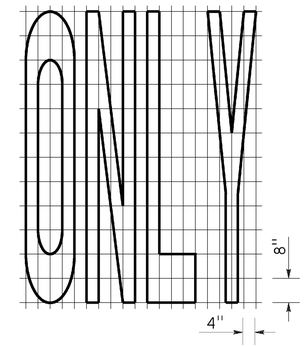

A=22 ft^2

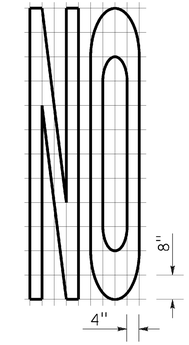

A=14 ft^2

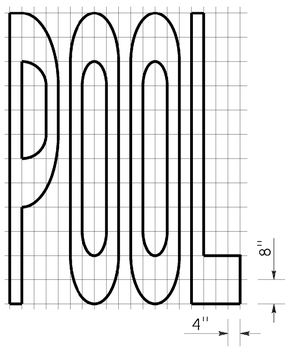

A=23 ft^2

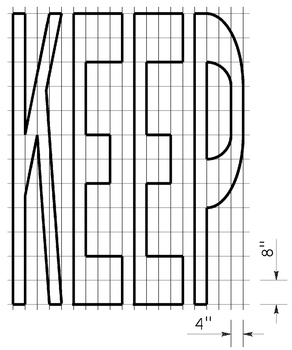

A=24 ft^2

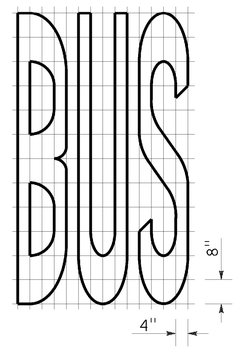

A=20 ft^2

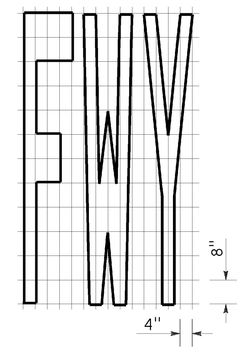

A=16 ft^2

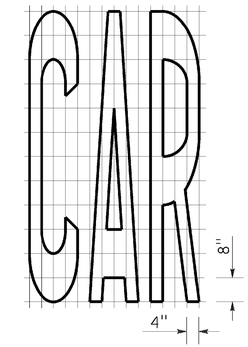

A=17 ft^2

WORD MARKINGS			
ITEM	ft^2	ITEM	ft^2
LANE	24	NO	14
POOL	23	BIKE	21
CAR	17	BUS	20
CLEAR	27	ONLY	22
KEEP	24	FWY	16

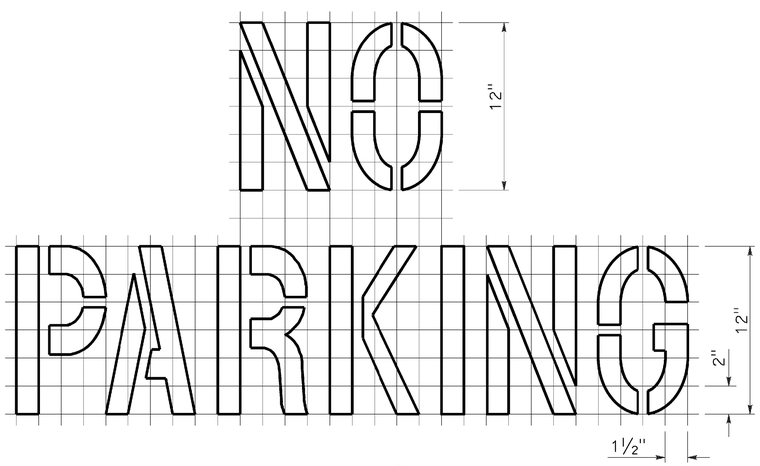

A=2 ft^2

See Notes 6 and 7

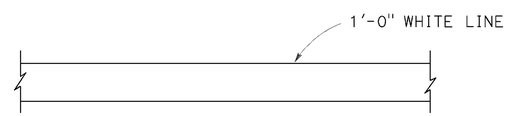

LIMIT LINE (STOP LINE)

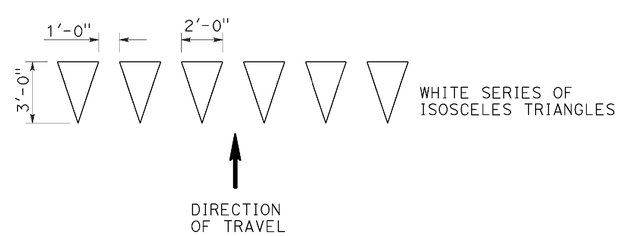

YIELD LINE

NOTES:

1. If a message consists of more than one word, it should read "UP", i.e., the first word should be nearest the driver.
2. The space between words should be at least four times the height of the characters for low speed roads, but not more than ten times the height of the characters. The space may be reduced appropriately where there is limited space because of local conditions.
3. Minor variations in dimensions may be accepted by the Engineer.
4. Portions of a letter, number or symbol may be separated by connecting segments not to exceed 2" in width.
5. The words "NO PARKING" pavement marking is to be used for parking facilities. For typical locations of markings, see Standard Plans A90A and A90B.
6. The words "NO PARKING", shall be painted in white letters no less than 1'-0" high on a contrasting background and located so that it is visible to traffic enforcement officials.

STATE OF CALIFORNIA
DEPARTMENT OF TRANSPORTATION

PAVEMENT MARKINGS WORDS, LIMIT AND YIELD LINES

NO SCALE

RSP A24E DATED JULY 20, 2012 SUPERSEDES STANDARD PLAN A24E
DATED MAY 20, 2011 - PAGE 17 OF THE STANDARD PLANS BOOK DATED 2010.

REVISED STANDARD PLAN RSP A24E

2010 REVISED STANDARD PLAN RSP A24E

DATE PLOTTED => 22-AUG-2016
TIME PLOTTED => 15:23

Dist	COUNTY	ROUTE	POST MILES TOTAL PROJECT	SHEET No.	TOTAL SHEETS
02	Sis	96	R52.5/88.4	76	208

REGISTERED CIVIL ENGINEER

October 30, 2015
PLANS APPROVAL DATE

Carl M. Duan
No. C59976
Exp. 6-30-16
CIVIL
STATE OF CALIFORNIA
REGISTERED PROFESSIONAL ENGINEER

THE STATE OF CALIFORNIA OR ITS OFFICERS OR AGENTS SHALL NOT BE RESPONSIBLE FOR THE ACCURACY OR COMPLETENESS OF SCANNED COPIES OF THIS PLAN SHEET.

TO ACCOMPANY PLANS DATED 06-15-16

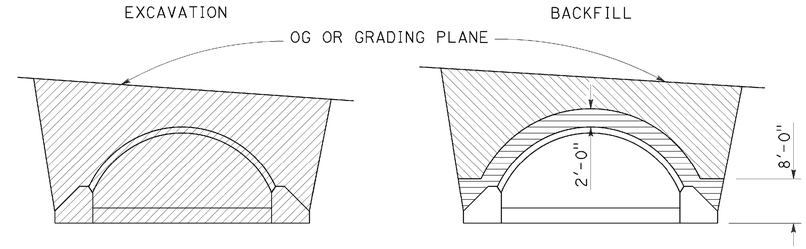

IN TRENCH

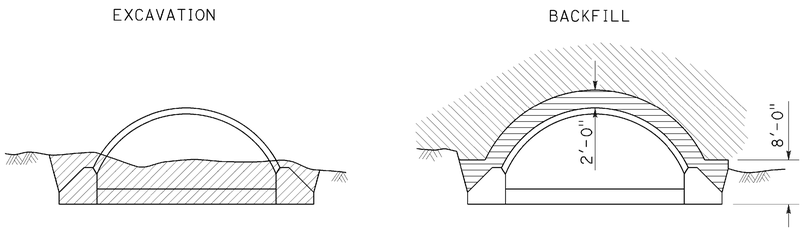

IN EMBANKMENT

STRUCTURAL STEEL PLATE ARCHES

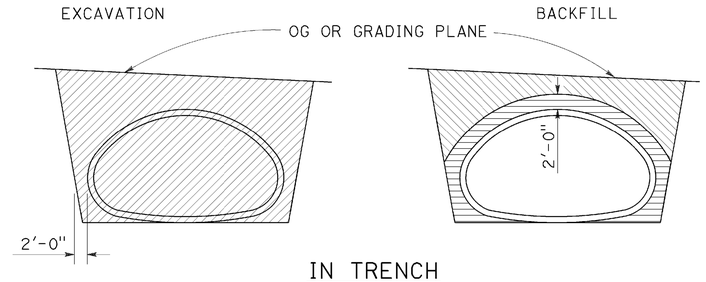

IN TRENCH

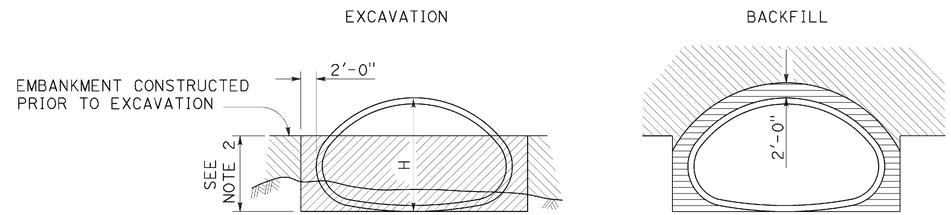

IN EMBANKMENT

STRUCTURAL STEEL PLATE PIPE ARCHES AND VEHICULAR UNDERCROSSING

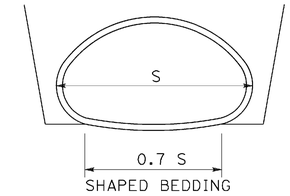

SHAPED BEDDING

S = Larger than 84"

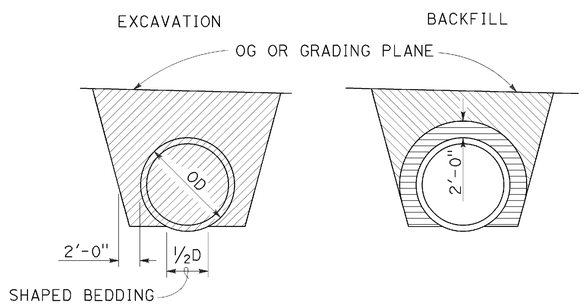

IN TRENCH

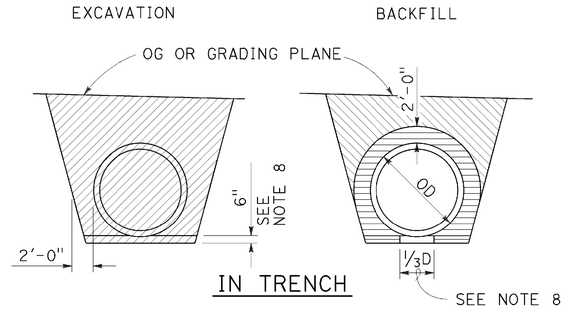

IN TRENCH

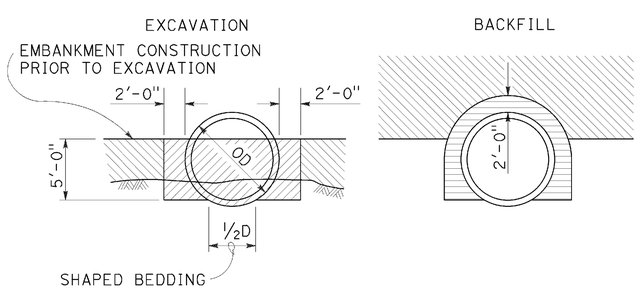

IN EMBANKMENT

PIPES

Larger than 84"

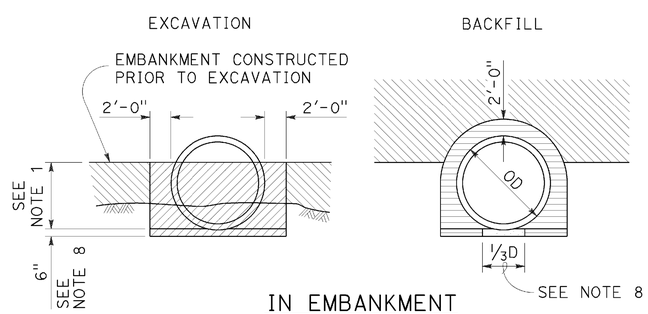

IN EMBANKMENT

METAL AND PLASTIC PIPES AND CORRUGATED METAL PIPE ARCHES

84" or Smaller

NOTES:

1. PIPES: 30" minimum for diameters up to and including 42" then ⅔ diameter but no more than 60" required. CORRUGATED METAL PIPE ARCHES: 30" maximum.
2. ⅔ H up to 60" maximum.
3. Slope or shore excavation sides as necessary.
4. Backfill shall be placed full width of excavation except as noted.
5. Diagrams do not apply to overside drains.
6. Dimensions shown are minimum.
7. Construction strutting of structural steel plate pipe, arches and vehicular undercrossing to be used when shown on the project plans. When shown, see Standard Plan D88A for strutting requirements.
8. Excavation below pipe and 80% relative compaction requirements for plastic pipes only.
9. D is the inside diameter (ID) of the pipe.

LEGEND

- STRUCTURE EXCAVATION (CULVERT)
- ROADWAY EMBANKMENT
- STRUCTURE BACKFILL (CULVERT) 95% RELATIVE COMPACTION
- STRUCTURE BACKFILL (CULVERT) 80% RELATIVE COMPACTION

STATE OF CALIFORNIA
DEPARTMENT OF TRANSPORTATION

EXCAVATION AND BACKFILL METAL AND PLASTIC CULVERTS

NO SCALE

RSP A62F DATED OCTOBER 30, 2015 SUPERSEDES STANDARD PLAN A62F DATED MAY 20, 2011 - PAGE 26 OF THE STANDARD PLANS BOOK DATED 2010.

REVISED STANDARD PLAN RSP A62F

2010 REVISED STANDARD PLAN RSP A62F

DATE PLOTTED => 22-AUG-2016
TIME PLOTTED => 15:24

Dist	COUNTY	ROUTE	POST MILES TOTAL PROJECT	SHEET No.	TOTAL SHEETS
02	Sis	96	R52.5/88.4	77	208

Randell D. Hiatt
REGISTERED CIVIL ENGINEER

July 19, 2013
PLANS APPROVAL DATE

REGISTERED PROFESSIONAL ENGINEER
Randell D. Hiatt
No. C50200
Exp. 6-30-15
CIVIL
STATE OF CALIFORNIA

THE STATE OF CALIFORNIA OR ITS OFFICERS OR AGENTS SHALL NOT BE RESPONSIBLE FOR THE ACCURACY OR COMPLETENESS OF SCANNED COPIES OF THIS PLAN SHEET.

TO ACCOMPANY PLANS DATED 06-15-16

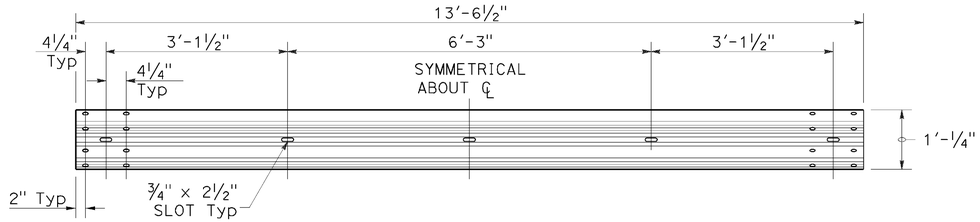

TYPICAL RAIL ELEMENT

NOTE:

1. Slotted holes for splice bolts to overlap ends of rail element.

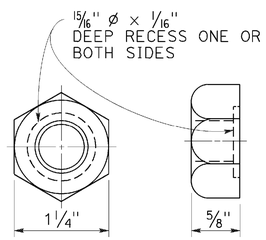

⅝" Ø RECESS NUT

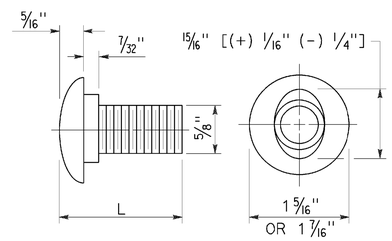

⅝" Ø BUTTON HEAD BOLT

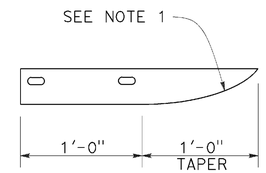

PLAN

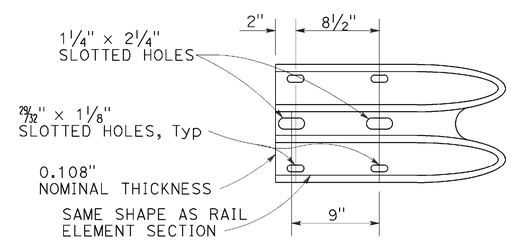

ELEVATION

END CAP
(TYPE A)

BUTTON HEAD BOLT

L	THREAD LENGTH
1⅜"	FULL THREAD LENGTH
2"	FULL THREAD LENGTH
10"	4" Min THREAD LENGTH
18"	4" Min THREAD LENGTH
20"	4" Min THREAD LENGTH
22"	4" Min THREAD LENGTH
26"	4" Min THREAD LENGTH
36"	4" Min THREAD LENGTH
** 2¾"	2" Min THREAD LENGTH
** 19"	4" Min THREAD LENGTH

** For nested rail applications.

STATE OF CALIFORNIA
DEPARTMENT OF TRANSPORTATION

MIDWEST GUARDRAIL SYSTEM STANDARD HARDWARE

NO SCALE

RSP A77M1 DATED JULY 19, 2013 SUPPLEMENTS THE STANDARD PLANS BOOK DATED 2010.

REVISED STANDARD PLAN RSP A77M1

2010 REVISED STANDARD PLAN RSP A77M1

DATE PLOTTED => 22-AUG-2016
TIME PLOTTED => 15:24

Dist	COUNTY	ROUTE	POST MILES TOTAL PROJECT	SHEET No.	TOTAL SHEETS
02	Sis	96	R52.5/88.4	78	208

Randell D. Hiatt
REGISTERED CIVIL ENGINEER

July 19, 2013
PLANS APPROVAL DATE

REGISTERED PROFESSIONAL ENGINEER
Randell D. Hiatt
No. C50200
Exp. 6-30-15
CIVIL
STATE OF CALIFORNIA

THE STATE OF CALIFORNIA OR ITS OFFICERS OR AGENTS SHALL NOT BE RESPONSIBLE FOR THE ACCURACY OR COMPLETENESS OF SCANNED COPIES OF THIS PLAN SHEET.

TO ACCOMPANY PLANS DATED 06-15-16

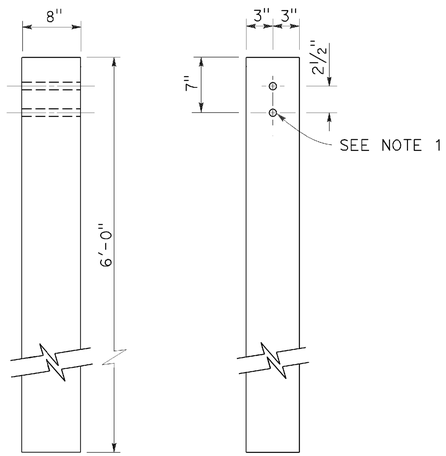

SIDE FRONT

6" x 8" WOOD POST
See Note 3

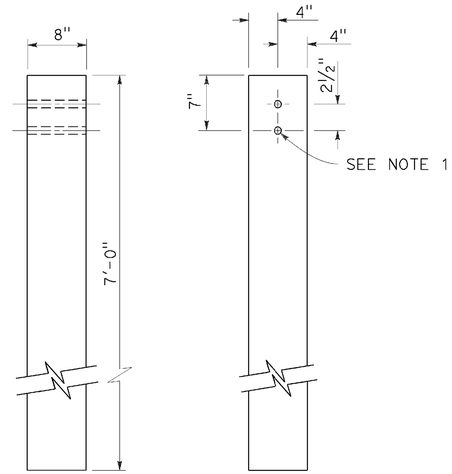

SIDE FRONT

8" x 8" WOOD POST
See Note 4

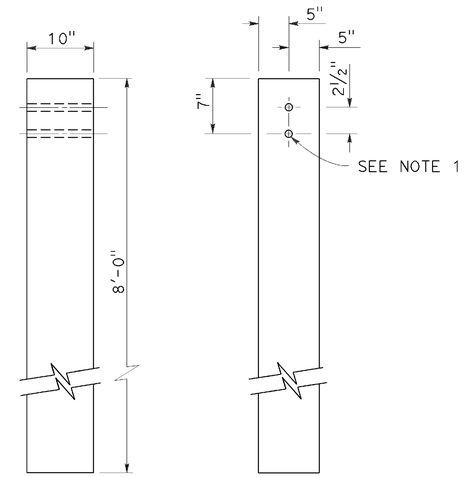

SIDE FRONT

10" x 10" WOOD POST
See Note 5

NOTES:

1. All holes in wood posts and blocks shall be 3/4" Dia ± 1/16".
2. Dimensions shown for wood post are nominal.
3. This post and block combination used for standard line post sections of MGS.
4. This post and 8" x 12" block combination used for line post sections of MGS on narrow roadways.
5. This post and 8" x 12" block combination is typically used where strengthened line post sections of MGS are warranted to shield fixed objects.
6. See Revised Standard Plan RSP A77L3 for use of 6" x 8" and 8" x 8" wood blocks.

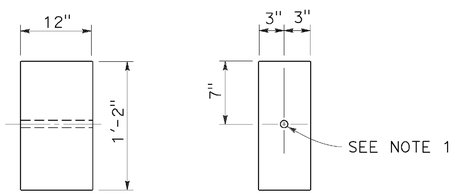

SIDE FRONT

6" x 12" WOOD BLOCK
See Note 3

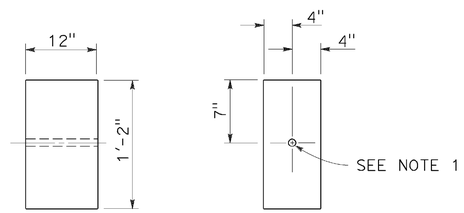

SIDE FRONT

8" x 12" WOOD BLOCK

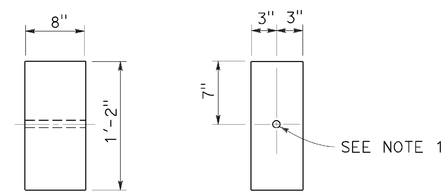

SIDE FRONT

6" x 8" WOOD BLOCK
Only for use with metal beam guard rail see Note 6

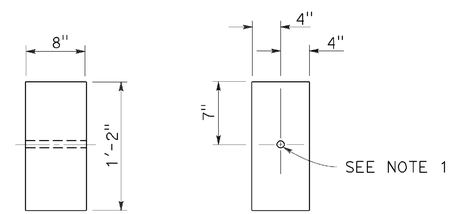

SIDE FRONT

8" x 8" WOOD BLOCK
Only for use with metal beam guard rail see Note 6

STATE OF CALIFORNIA
DEPARTMENT OF TRANSPORTATION

MIDWEST GUARDRAIL SYSTEM WOOD POST AND WOOD BLOCK DETAILS

NO SCALE

RSP A77N1 DATED JULY 19, 2013 SUPPLEMENTS THE STANDARD PLANS BOOK DATED 2010.

REVISED STANDARD PLAN RSP A77N1

2010 REVISED STANDARD PLAN RSP A77N1

DATE PLOTTED => 22-AUG-2016
TIME PLOTTED => 15:24

Dist	COUNTY	ROUTE	POST MILES TOTAL PROJECT	SHEET No.	TOTAL SHEETS
02	Sis	96	R52.5/88.4	79	208

Randell D. Hiatt
REGISTERED CIVIL ENGINEER

July 19, 2013
PLANS APPROVAL DATE

REGISTERED PROFESSIONAL ENGINEER
Randell D. Hiatt
No. C50200
Exp. 6-30-15
CIVIL
STATE OF CALIFORNIA

THE STATE OF CALIFORNIA OR ITS OFFICERS OR AGENTS SHALL NOT BE RESPONSIBLE FOR THE ACCURACY OR COMPLETENESS OF SCANNED COPIES OF THIS PLAN SHEET.

TO ACCOMPANY PLANS DATED 06-15-16

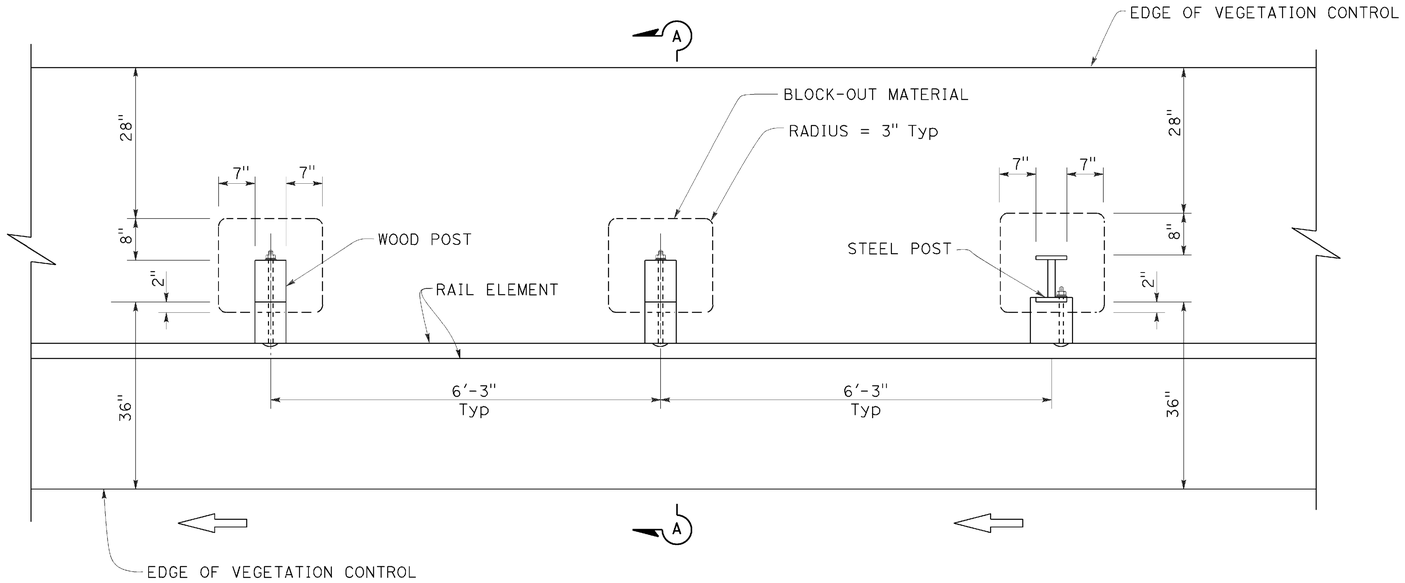

PLAN

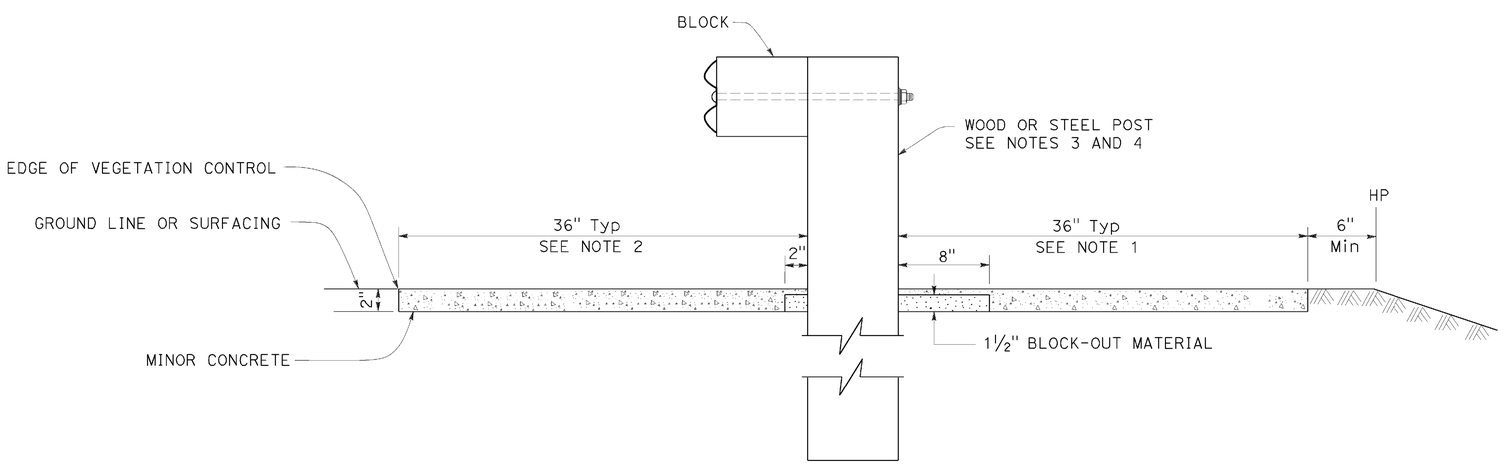

SECTION A-A

NOTES:

1. Where the distance between back of post and hinge point is less than 42", construct vegetation control to 6" from hinge point while maintaining the 8" block-out at back of post. If the 8" block-out at back of post can not be maintained, construct vegetation control flush with the back edge of post.
2. Where dike is constructed under railing, construct vegetation control to back edge of dike. Where paved shoulder is constructed within 36" in front of the post, construct vegetation control to the edge of paved shoulder.
3. For wood post sizes, see Revised Standard Plan RSP A77N1.
4. For steel post sizes, see Revised Standard Plan RSP A77N2.
5. For details not shown, see Revised Standard Plans RSP A77L1 and RSP A77L2.

STATE OF CALIFORNIA
DEPARTMENT OF TRANSPORTATION

MIDWEST GUARDRAIL SYSTEM TYPICAL VEGETATION CONTROL STANDARD RAILING SECTION

NO SCALE

RSP A77N5 DATED JULY 19, 2013 SUPPLEMENTS THE STANDARD PLANS BOOK DATED 2010.

REVISED STANDARD PLAN RSP A77N5

2010 REVISED STANDARD PLAN RSP A77N5

DATE PLOTTED => 22-AUG-2016
TIME PLOTTED => 15:25

Dist	COUNTY	ROUTE	POST MILES TOTAL PROJECT	SHEET No.	TOTAL SHEETS
02	Sis	96	R52.5/88.4	80	208

Randell D. Hiatt
REGISTERED CIVIL ENGINEER

July 19, 2013
PLANS APPROVAL DATE

REGISTERED PROFESSIONAL ENGINEER
Randell D. Hiatt
No. C50200
Exp. 6-30-15
CIVIL
STATE OF CALIFORNIA

THE STATE OF CALIFORNIA OR ITS OFFICERS OR AGENTS SHALL NOT BE RESPONSIBLE FOR THE ACCURACY OR COMPLETENESS OF SCANNED COPIES OF THIS PLAN SHEET.

TO ACCOMPANY PLANS DATED 06-15-16

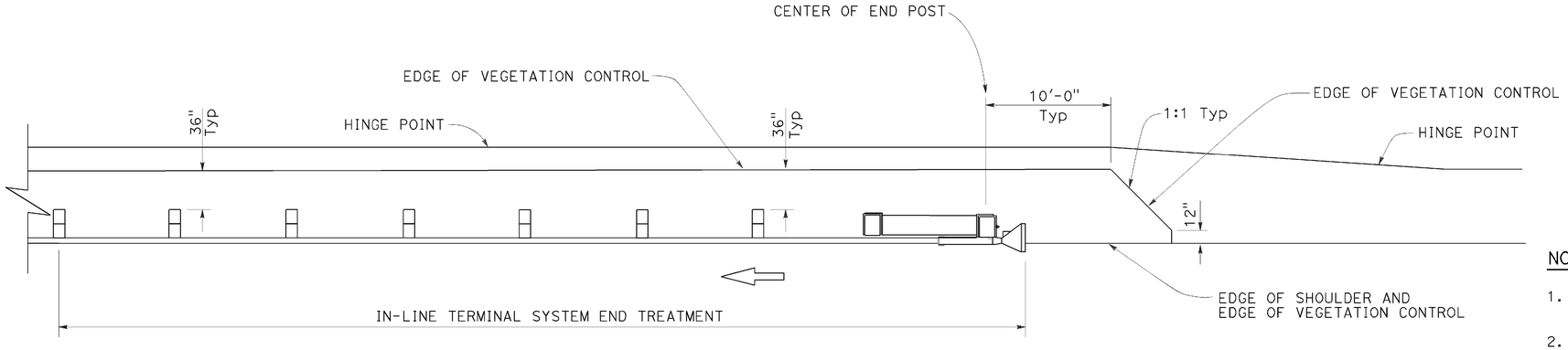

PLAN

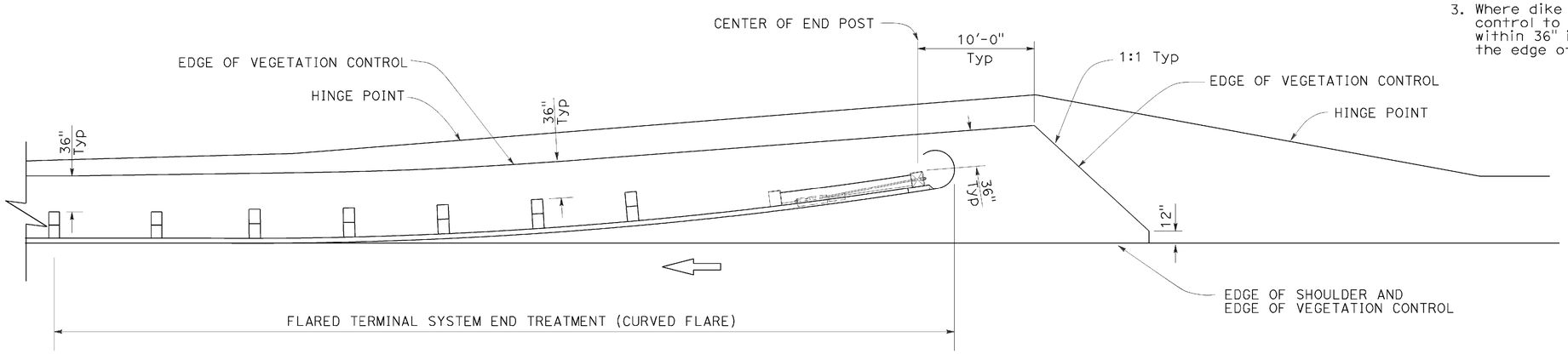

PLAN

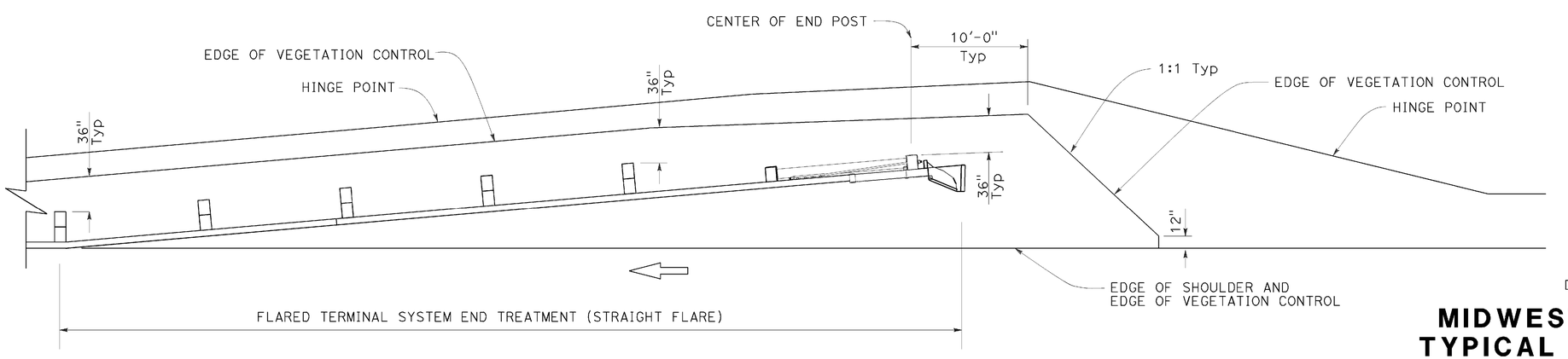

PLAN

NOTES:

1. See Revised Standard Plan RSP A77N5 for additional vegetation control details.
2. Where the distance between back of post and hinge point is less than 42", construct vegetation control to 6" from hinge point while maintaining the 8" block-out at back of post. If the 8" block-out at back of post can not be maintained, construct vegetation control flush with the back edge of post.
3. Where dike is constructed under railing, construct vegetation control to back edge of dike. Where paved shoulder is constructed within 36" in front of the post, construct vegetation control to the edge of paved shoulder.

STATE OF CALIFORNIA
DEPARTMENT OF TRANSPORTATION

MIDWEST GUARDRAIL SYSTEM TYPICAL VEGETATION CONTROL FOR TERMINAL SYSTEM END TREATMENTS

NO SCALE

RSP A77N6 DATED JULY 19, 2013 SUPPLEMENTS THE STANDARD PLANS BOOK DATED 2010.

REVISED STANDARD PLAN RSP A77N6

2010 REVISED STANDARD PLAN RSP A77N6

DATE PLOTTED => 22-AUG-2016
TIME PLOTTED => 15:26

Dist	COUNTY	ROUTE	POST MILES TOTAL PROJECT	SHEET No.	TOTAL SHEETS
02	Sis	96	R52.5/88.4	81	208

Randell D. Hiatt
REGISTERED CIVIL ENGINEER

August 14, 2015
PLANS APPROVAL DATE

REGISTERED PROFESSIONAL ENGINEER
Randell D. Hiatt
No. C50200
Exp. 6-30-17
CIVIL
STATE OF CALIFORNIA

THE STATE OF CALIFORNIA OR ITS OFFICERS OR AGENTS SHALL NOT BE RESPONSIBLE FOR THE ACCURACY OR COMPLETENESS OF SCANNED COPIES OF THIS PLAN SHEET.

TO ACCOMPANY PLANS DATED 06-15-16

2010 REVISED STANDARD PLAN RSP A77Q1

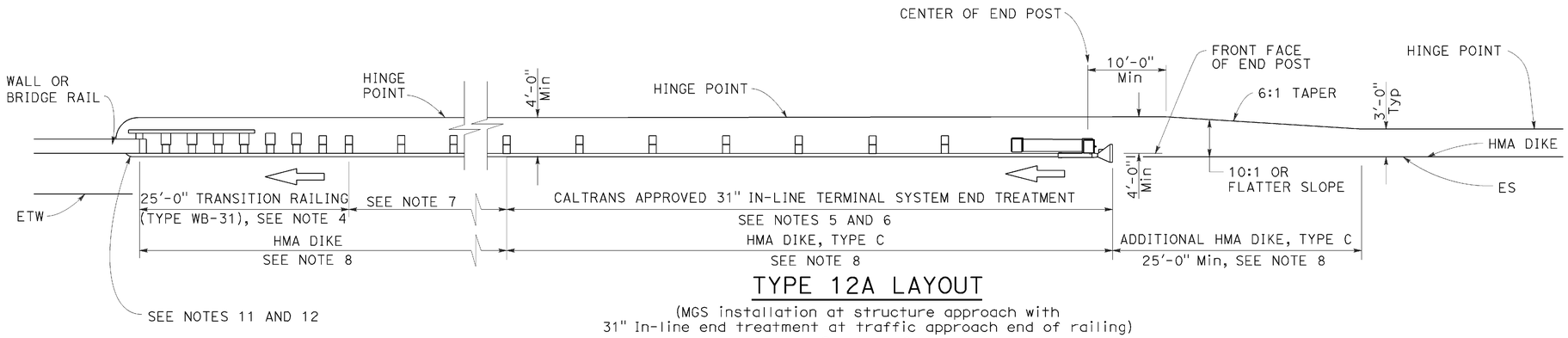

TYPE 12A LAYOUT

(MGS installation at structure approach with
31" In-line end treatment at traffic approach end of railing)
See Note 9

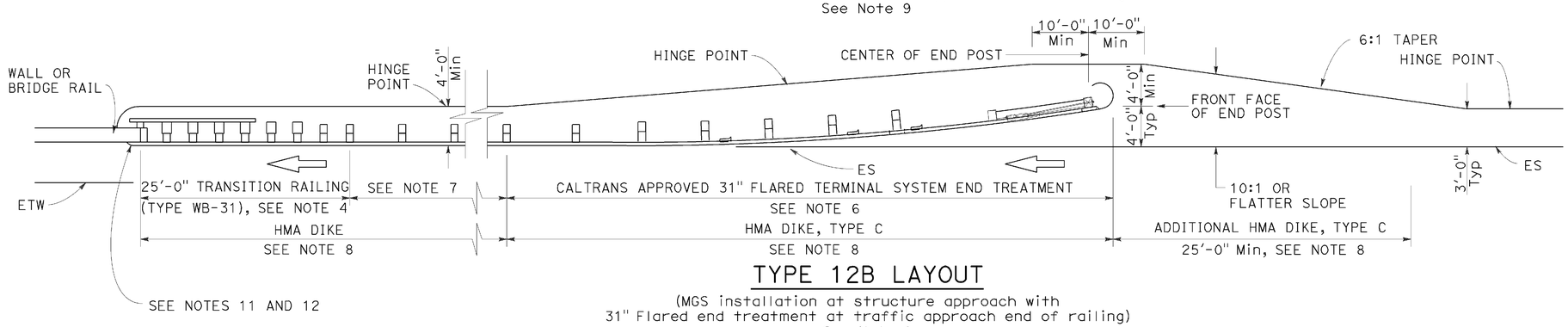

TYPE 12B LAYOUT

(MGS installation at structure approach with
31" Flared end treatment at traffic approach end of railing)
See Note 9

NOTES:

1. Line post, blocks and hardware to be used are shown on Revised Standard Plans RSP A77L1, RSP A77L2, RSP A77M1, RSP A77N1 and RSP A77N2.
2. MGS post spacing to be 6'-3" center to center, except as otherwise noted.
3. Except as noted, line posts are 6" x 8" x 6'-0" wood with 6" x 12" x 1'-2" wood blocks. W6 x 8.5 or W6 x 9 steel posts, 6'-0" in length, with 6" x 12" x 1'-2" notched wood blocks or plastic blocks may be used for 6" x 8" x 6'-0" wood posts with 6" x 12" x 1'-2" wood blocks where applicable and when specified.
4. For Transition Railing (Type WB-31) details for Types 12A and 12B Layouts, see Revised Standard Plan RSP A77U4.
5. 31" in-line terminal system end treatments are used where site conditions will not accommodate a 31" flared end treatment.
6. The type of 31" terminal system end treatment to be used will be shown on the Project Plans.
7. Dependent on site conditions (embankment height, side slopes, or other fixed objects), it may be advisable to construct additional guard railing (a length equal to multiples of 12'-6" with 6'-3" post spacing) between the transition railing and end treatment. A 12.5 degree angle of departure can be drawn on the Project Plans from the edge of traveled way through the outer most point of the fixed object to determine the additional length of railing needed.
8. Where placement of dike is required with guard railing installations, see Revised Standard Plan RSP A77N4 for dike positioning details.
9. Type 12A or Type 12B Layouts are typically used:
   a. To the right of approaching traffic, at the end of a structure, on two-lane conventional highway where the roadbed width across the structure is less than 40 feet.
   b. To the left of approaching traffic, at the end of a structure, on two-lane conventional highway where the roadbed width across the structure is less than 40 feet.
   c. To the right of approaching traffic at the end of each structure on multilane freeways or expressways with separate adjacent or parallel bridges.
   d. To the right of approaching traffic at the end of the structure on multilane freeways or expressways with decked median on the bridge.
10. See Revised Standard Plan RSP A77Q3 for typical layout used left of approaching traffic at the ends of each structure on multilane freeways or expressways with separate adjacent or parallel bridges.
11. For additional details of typical connections to bridge rail, see Connection Detail AA on Revised Standard Plans RSP A77U1 and RSP A77U2 and Connection Detail FF on Revised Standard Plans RSP A77V1 and RSP A77V2.
12. For additional details of a typical connection to walls or abutments, see Revised Standard Plan RSP A77U3.

STATE OF CALIFORNIA
DEPARTMENT OF TRANSPORTATION

MIDWEST GUARDRAIL SYSTEM TYPICAL LAYOUTS FOR STRUCTURE APPROACH

NO SCALE

RSP A77Q1 DATED AUGUST 14, 2015 SUPERSEDES RSP A77Q1 DATED JULY 19, 2013 THAT SUPPLEMENTS THE STANDARD PLANS BOOK DATED 2010.

REVISED STANDARD PLAN RSP A77Q1

DATE PLOTTED => 22-AUG-2016
TIME PLOTTED => 15:26

Dist	COUNTY	ROUTE	POST MILES TOTAL PROJECT	SHEET No.	TOTAL SHEETS
02	Sis	96	R52.5/88.4	82	208

Randell D. Hiatt
REGISTERED CIVIL ENGINEER

July 19, 2013
PLANS APPROVAL DATE

REGISTERED PROFESSIONAL ENGINEER
Randell D. Hiatt
No. C50200
Exp. 6-30-15
CIVIL
STATE OF CALIFORNIA

THE STATE OF CALIFORNIA OR ITS OFFICERS OR AGENTS SHALL NOT BE RESPONSIBLE FOR THE ACCURACY OR COMPLETENESS OF SCANNED COPIES OF THIS PLAN SHEET.

TO ACCOMPANY PLANS DATED 06-15-16

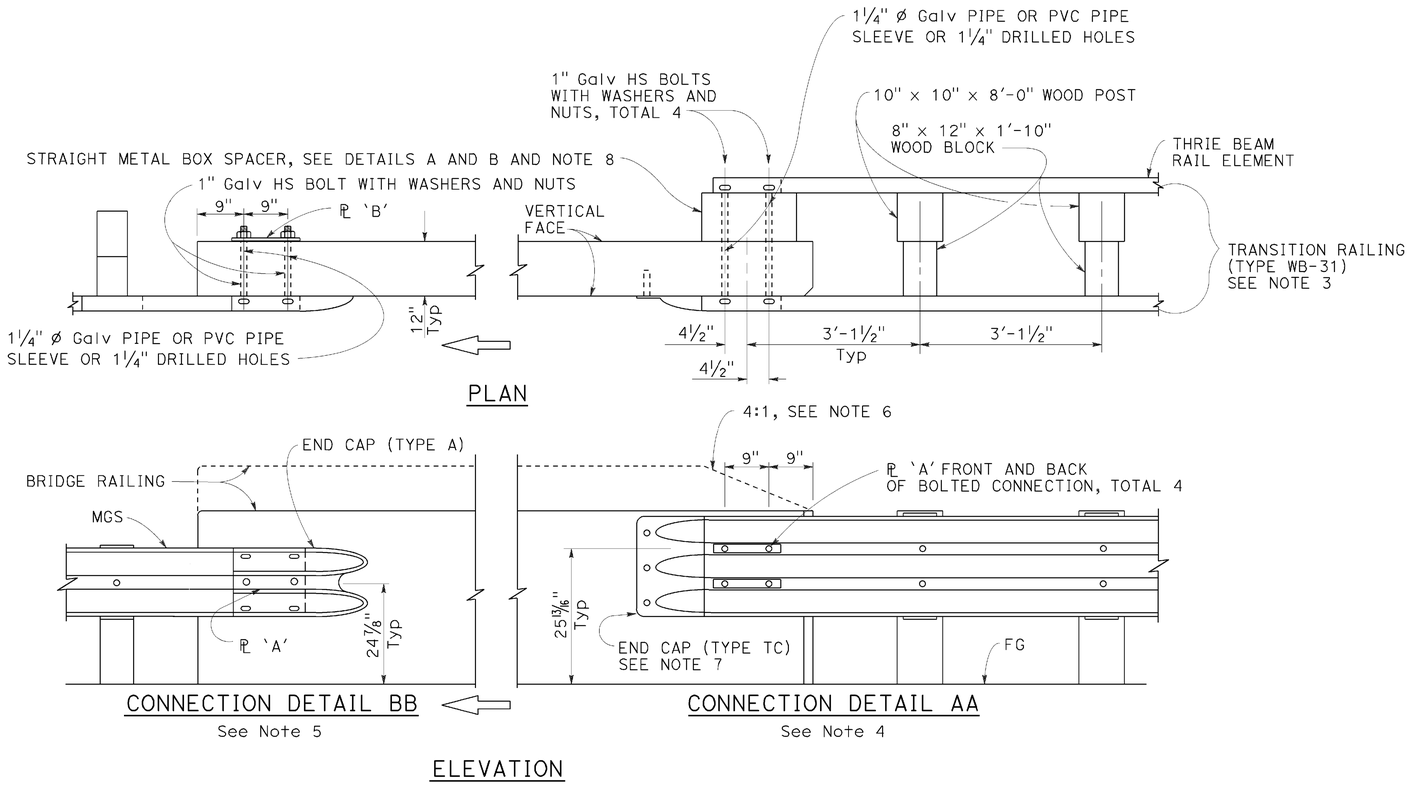

MIDWEST GUARDRAIL SYSTEM CONNECTION TO BRIDGE RAILING WITHOUT SIDEWALK

NOTES:

1. See Revised Standard Plan RSP A77U2 for additional connection details to bridges without sidewalks.
2. Additional details of posts, blocks and hardware are shown on Revised Standard Plans RSP A77M1, RSP A77N1 and RSP A77N2.
3. For additional details of Transition Railing (Type WB-31), see Revised Standard Plan RSP A77U4. Transition Railing (Type WB-31) transitions the 12 gauge MGS railing section to a heavier gage nested thrie beam railing section which is connected to the concrete bridge railing.
4. For typical use of Connection Detail AA, see Layout Types 12A and 12B on Revised Standard Plan RSP A77Q1, Layout Types 12C and 12D on Revised Standard Plan RSP A77Q2, and Layout Type 12E on Revised Standard Plan RSP A77Q3.
5. For typical use of Connection Detail BB, see Layout Type 12D (structure departure railing connection) on Revised Standard Plan RSP A77Q2 and Layout Type 12DD on Revised Standard Plan RSP A77Q5.
6. Where the height of the bridge railing exceeds the height of the thrie beam railing by more than 1" at Connection Detail AA, taper the top of the end of the bridge railing at 4:1 to match the top elevation of the thrie beam rail.
7. For details of End Cap (Type TC), see Revised Standard Plan RSP A77U4.
8. See Revised Standard Plan RSP A77U4 for additional details regarding depth dimension for straight metal box spacer.

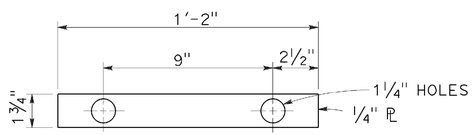

PLATE 'A'

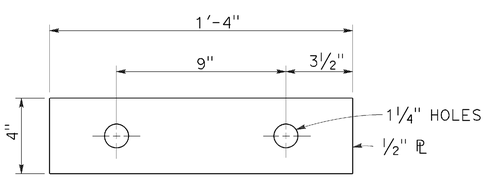

PLATE 'B'
(For backside of connection BB)

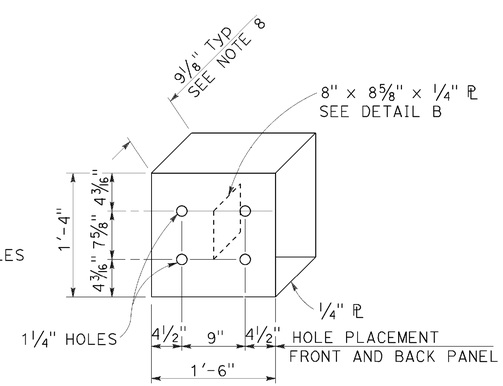

DETAIL A

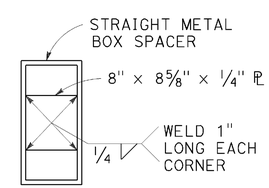

DETAIL B

STRAIGHT METAL BOX SPACER

STATE OF CALIFORNIA
DEPARTMENT OF TRANSPORTATION

MIDWEST GUARDRAIL SYSTEM CONNECTIONS TO BRIDGE RAILINGS WITHOUT SIDEWALKS DETAILS No. 1

NO SCALE

RSP A77U1 DATED JULY 19, 2013 SUPPLEMENTS THE STANDARD PLANS BOOK DATED 2010.

REVISED STANDARD PLAN RSP A77U1

2010 REVISED STANDARD PLAN RSP A77U1

DATE PLOTTED => 22-AUG-2016
TIME PLOTTED => 15:27

Dist	COUNTY	ROUTE	POST MILES TOTAL PROJECT	SHEET No.	TOTAL SHEETS
02	Sis	96	R52.5/88.4	83	208

Randell D. Hiatt
REGISTERED CIVIL ENGINEER

July 19, 2013
PLANS APPROVAL DATE

REGISTERED PROFESSIONAL ENGINEER
Randell D. Hiatt
No. C50200
Exp. 6-30-15
CIVIL
STATE OF CALIFORNIA

THE STATE OF CALIFORNIA OR ITS OFFICERS OR AGENTS SHALL NOT BE RESPONSIBLE FOR THE ACCURACY OR COMPLETENESS OF SCANNED COPIES OF THIS PLAN SHEET.

TO ACCOMPANY PLANS DATED 06-15-16

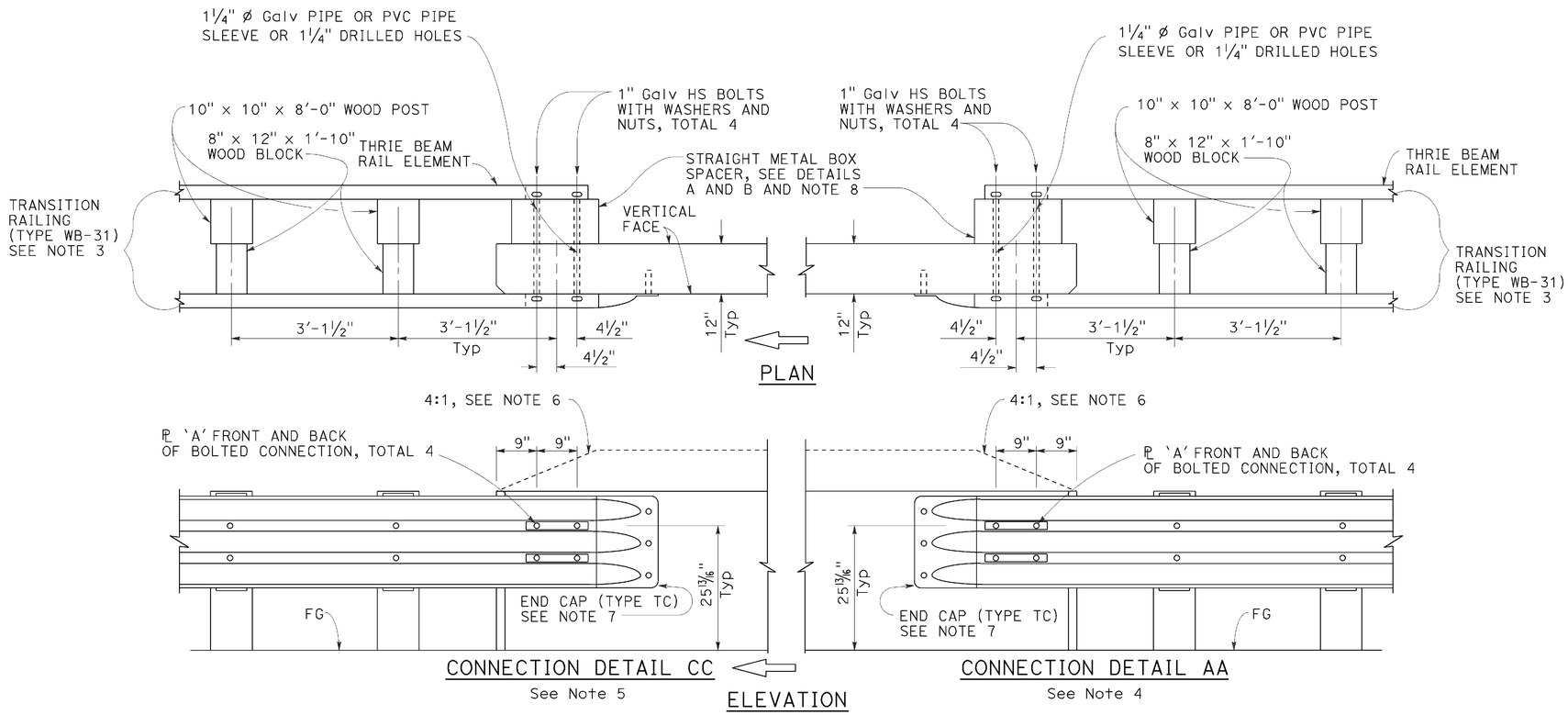

MIDWEST GUARDRAIL SYSTEM CONNECTION TO BRIDGE RAILING WITHOUT SIDEWALK

NOTES:

1. See Revised Standard Plan RSP A77U1 for additional connection details to bridges without sidewalks.
2. Additional details of posts, blocks and hardware are shown on Revised Standard Plans RSP A77M1, RSP A77N1 and RSP A77N2.
3. For additional details of Transition Railing (Type WB-31), see Revised Standard Plan RSP A77U4. Transition Railing (Type WB-31) transitions the 12 gauge MGS railing section to a heavier gage nested thrie beam railing section which is connected to the concrete bridge railing.
4. For typical use of Connection Detail AA, see Layout Types 12A and 12B on Revised Standard Plan RSP A77Q1, Layout Types 12C and 12D on Revised Standard Plan RSP A77Q2, and Layout Type 12E on Revised Standard Plan RSP A77Q3.
5. For typical use of Connection Detail CC, see Layout Types 12AA and 12BB on Revised Standard Plan RSP A77Q4 and Layout Type 12CC on Revised Standard Plan RSP A77Q5.
6. Where the height of the bridge railing exceeds the height of the thrie beam railing by more than 1" at Connection Detail AA and connection Detail CC, taper the top of the end of the bridge railing at 4:1 to match the top elevation of the thrie beam railing.
7. For details of End Cap (Type TC), see Revised Standard Plan RSP A77U4.
8. See Revised Standard Plan RSP A77U4 for additional details regarding depth dimension for straight metal box spacer.

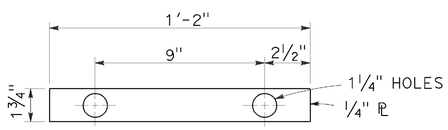

PLATE 'A'

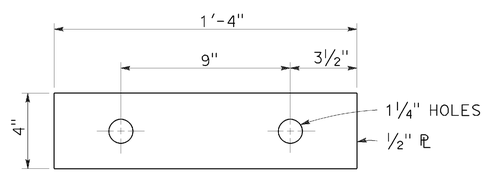

PLATE 'B'
(For backside of connection BB)

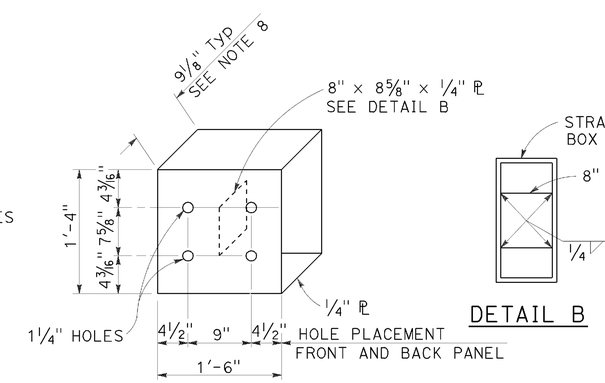

DETAIL A

STRAIGHT METAL BOX SPACER

STATE OF CALIFORNIA
DEPARTMENT OF TRANSPORTATION

MIDWEST GUARDRAIL SYSTEM CONNECTIONS TO BRIDGE RAILINGS WITHOUT SIDEWALKS DETAILS No. 2

NO SCALE

RSP A77U2 DATED JULY 19, 2013 SUPPLEMENTS THE STANDARD PLANS BOOK DATED 2010.

REVISED STANDARD PLAN RSP A77U2

2010 REVISED STANDARD PLAN RSP A77U2

DATE PLOTTED => 22-AUG-2016
TIME PLOTTED => 15:22

Dist	COUNTY	ROUTE	POST MILES TOTAL PROJECT	SHEET No.	TOTAL SHEETS
02	Sis	96	R52.5/88.4	84	208

Randell D. Hiatt
REGISTERED CIVIL ENGINEER

October 30, 2015
PLANS APPROVAL DATE

REGISTERED PROFESSIONAL ENGINEER Randell D. Hiatt No. C50200 Exp. 6-30-17 CIVIL STATE OF CALIFORNIA

THE STATE OF CALIFORNIA OR ITS OFFICERS OR AGENTS SHALL NOT BE RESPONSIBLE FOR THE ACCURACY OR COMPLETENESS OF SCANNED COPIES OF THIS PLAN SHEET.

TO ACCOMPANY PLANS DATED 06-15-16

2010 REVISED STANDARD PLAN RSP A78A

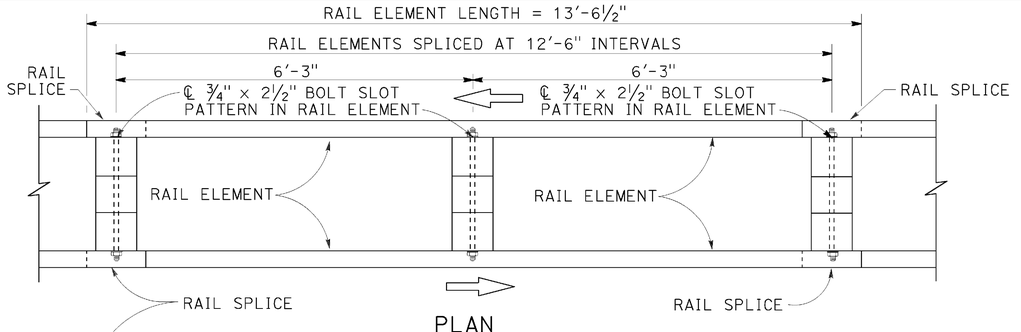

PLAN

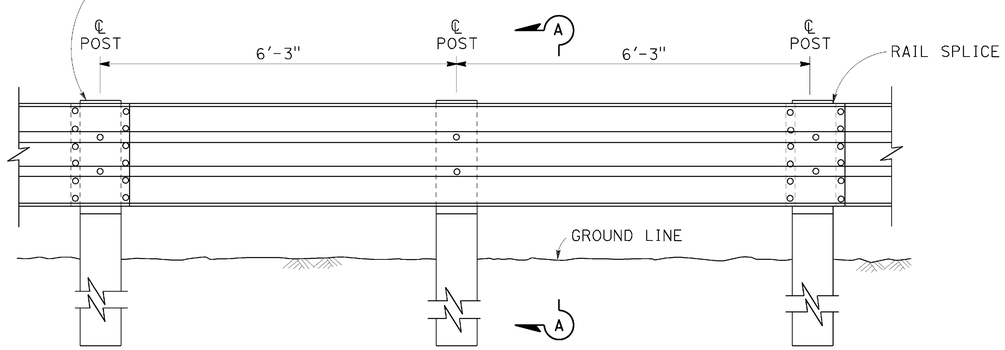

ELEVATION

DOUBLE THRIE BEAM BARRIER

(Wood post and blocks)
See Note 1

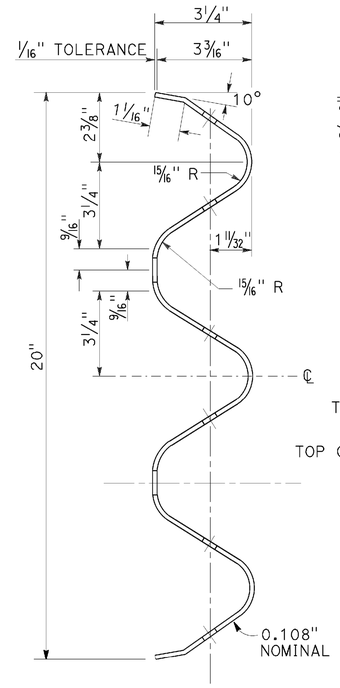

SECTION THRU RAIL ELEMENT

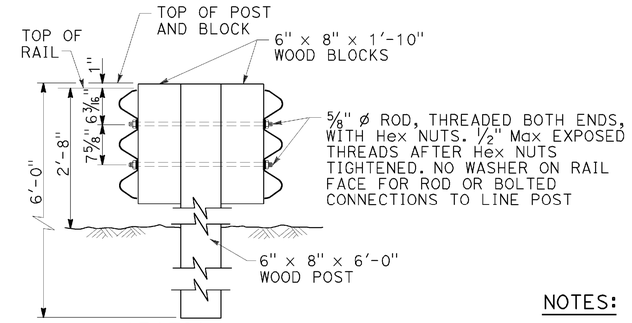

SECTION A-A

TYPICAL WOOD LINE POST INSTALLATION

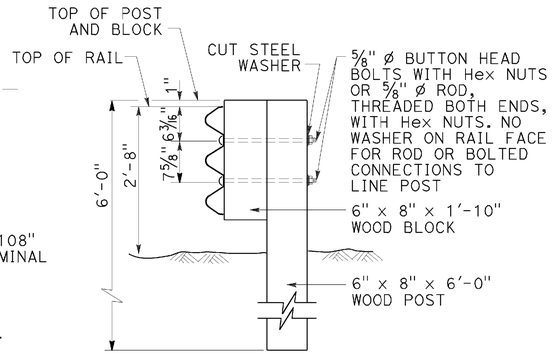

Where bolts are used, install so that the threaded end of the bolts and nuts are placed away from traffic side of rail.

SECTION B-B

TYPICAL WOOD LINE POST INSTALLATION

NOTES:

1. For details of steel post thrie beam barrier, see Standard Plan A78B.
2. For details of standard hardware, posts and blocks used to construct thrie beam barrier, see Standard Plan A78C1 and Revised Standard Plan RSP A78C2.
3. Thrie beam barrier post spacing to be 6'-3" center to center, except as otherwise noted.
4. Top of barrier rail to be 2'-8" above ground line or shoulder surfacing under the rail element.
5. For barrier end treatments and barrier connections, see Standard Plans A78E3 and A78G, and Revised Standard Plans RSP A78E1, RSP A78E2 RSP A77Q1, RSP A77Q2 and RSP A78H.
6. For connection to Concrete Barrier (Type 60), see Standard Plans A78I.
7. For details of thrie beam barrier on bridge see Standard Plan A78D2. For details of thrie beam barrier at fixed object, see Revised Standard Plan RSP A78D1.
8. See Project Plans for barrier delineation locations. Spacing of barrier markers to match spacing of raised pavement markers on adjacent median edgeline pavement delineation.
9. Install posts in soil.

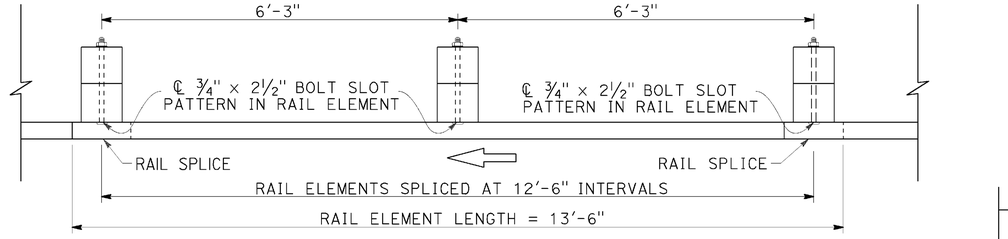

PLAN

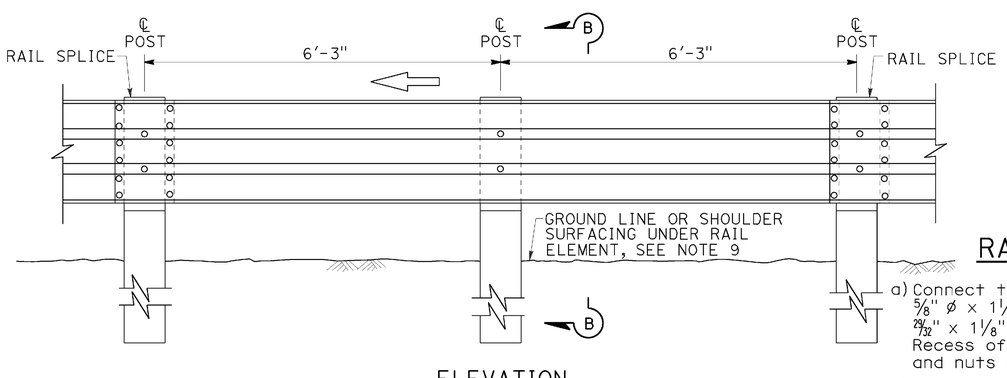

ELEVATION

SINGLE THRIE BEAM BARRIER

(Wood post and blocks)
See Note 1

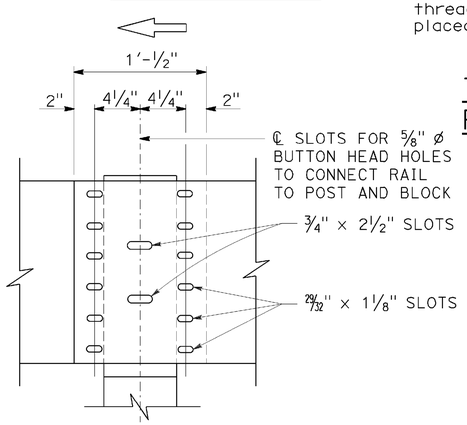

ELEVATION

RAIL ELEMENT SPLICE DETAIL

a) Connect the overlapped ends of the thrie beam rail elements with ⅝" ø x 1¼" button head oval shoulder bolts inserted into the 29/32" x 1⅛" slots and bolted together with ⅝" ø recessed hex nuts. Recess of hex nut points toward rail element. A total of 12 bolts and nuts are to be used at each rail splice connection.

b) The ends of the rail elements are to be overlapped in the direction of traffic (see details).

c) Where end cap is to be attached to the end of a rail element, a total of 4 of the above described splice bolts and nuts are to be used. Where a return cap is to be attached to the ends of rail elements, a total of 8 of the above described splice bolts and nuts are to be used.

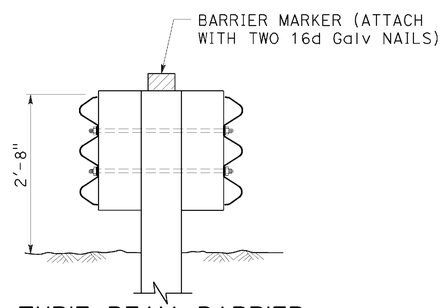

THRIE BEAM BARRIER DELINEATION

See Note 8

STATE OF CALIFORNIA
DEPARTMENT OF TRANSPORTATION

THRIE BEAM BARRIER STANDARD BARRIER RAILING SECTION (WOOD POST WITH WOOD BLOCK)

NO SCALE

RSP A78A DATED OCTOBER 30, 2015 SUPERSEDES RSP A78A DATED JULY 19, 2013 AND STANDARD PLAN A78A DATED MAY 20, 2011 - PAGE 89 OF THE STANDARD PLANS BOOK DATED 2010.

REVISED STANDARD PLAN RSP A78A

DATE PLOTTED => 22-AUG-2016
TIME PLOTTED => 15:27

Dist	COUNTY	ROUTE	POST MILES TOTAL PROJECT	SHEET No.	TOTAL SHEETS
02	Sis	96	R52.5/88.4	85	208

Randell D. Hiatt
REGISTERED CIVIL ENGINEER

July 19, 2013
PLANS APPROVAL DATE

REGISTERED PROFESSIONAL ENGINEER
Randell D. Hiatt
No. C50200
Exp. 6-30-15
CIVIL
STATE OF CALIFORNIA

THE STATE OF CALIFORNIA OR ITS OFFICERS OR AGENTS SHALL NOT BE RESPONSIBLE FOR THE ACCURACY OR COMPLETENESS OF SCANNED COPIES OF THIS PLAN SHEET.

TO ACCOMPANY PLANS DATED 06-15-16

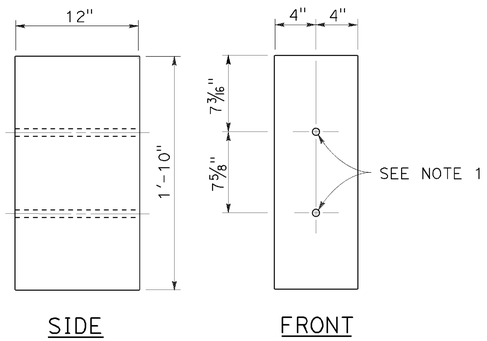

8" x 12"
WOOD BLOCK

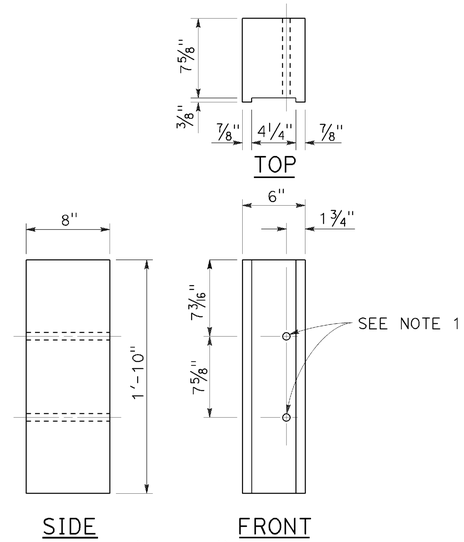

6" x 8"
NOTCHED WOOD BLOCK
See Notes 3 and 5

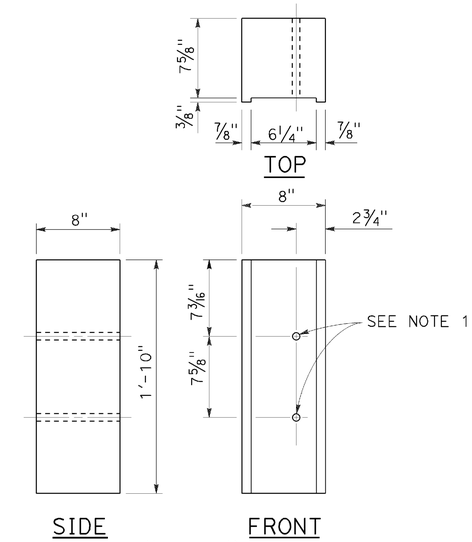

8" x 8"
NOTCHED WOOD BLOCK
See Notes 4 and 5

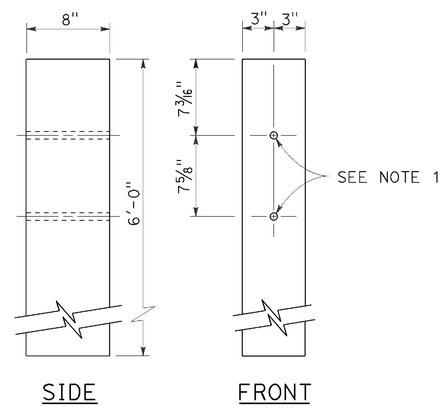

6" x 8"
WOOD POST

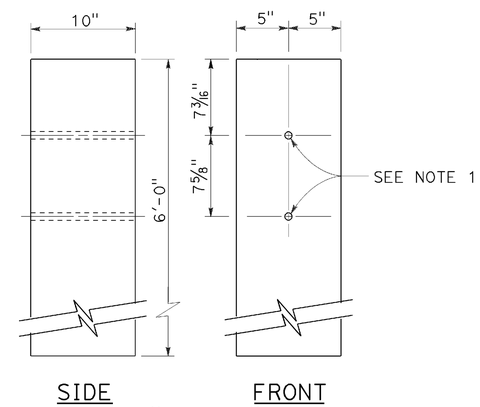

10" x 10"
WOOD POST

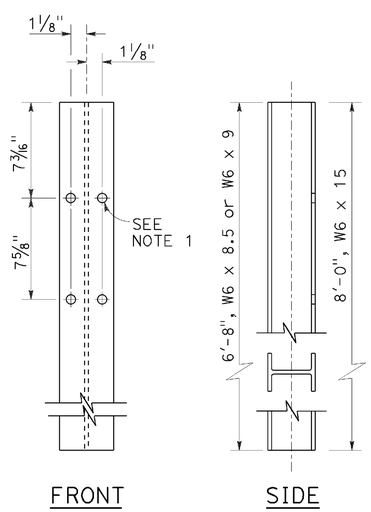

STEEL POST
W6 x 9 or W6 x 8.5 and W6 x 15

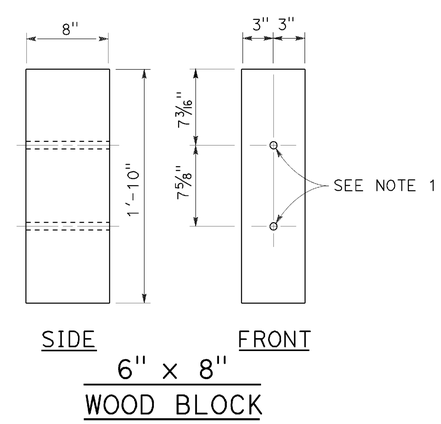

6" x 8"
WOOD BLOCK

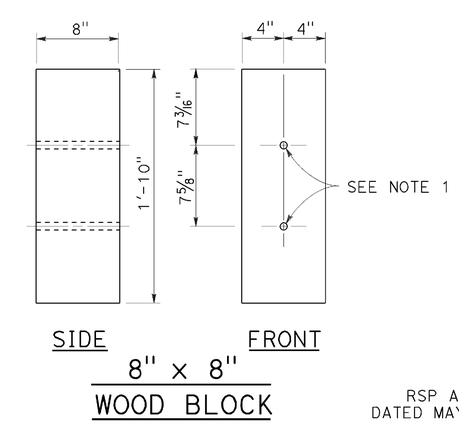

8" x 8"
WOOD BLOCK

NOTES:

1. All holes in steel post to be 13/16" Dia maximum. Holes in wood posts and wood blocks to be 3/4" Dia ±1/16".
2. Dimensions shown for wood post are nominal.
3. For use with W6 x 8.5 or W6 x 9 steel post.
4. For use with W6 x 15 steel post.
5. Notched face of block faces steel post.

STATE OF CALIFORNIA
DEPARTMENT OF TRANSPORTATION

THRIE BEAM BARRIER POST AND BLOCK DETAILS

NO SCALE

RSP A78C2 DATED JULY 19, 2013 SUPERSEDES STANDARD PLAN A78C2 DATED MAY 20, 2011 - PAGE 92 OF THE STANDARD PLANS BOOK DATED 2010.

REVISED STANDARD PLAN RSP A78C2

2010 REVISED STANDARD PLAN RSP A78C2

DATE PLOTTED => 22-AUG-2016
TIME PLOTTED => 15:28

Dist	COUNTY	ROUTE	POST MILES TOTAL PROJECT	SHEET No.	TOTAL SHEETS
02	Sis	96	R52.5/88.4	86	208

Randell D. Hiatt
REGISTERED CIVIL ENGINEER

July 19, 2013
PLANS APPROVAL DATE

REGISTERED PROFESSIONAL ENGINEER
Randell D. Hiatt
No. C50200
Exp. 6-30-15
CIVIL
STATE OF CALIFORNIA

THE STATE OF CALIFORNIA OR ITS OFFICERS OR AGENTS SHALL NOT BE RESPONSIBLE FOR THE ACCURACY OR COMPLETENESS OF SCANNED COPIES OF THIS PLAN SHEET.

TO ACCOMPANY PLANS DATED 06-15-16

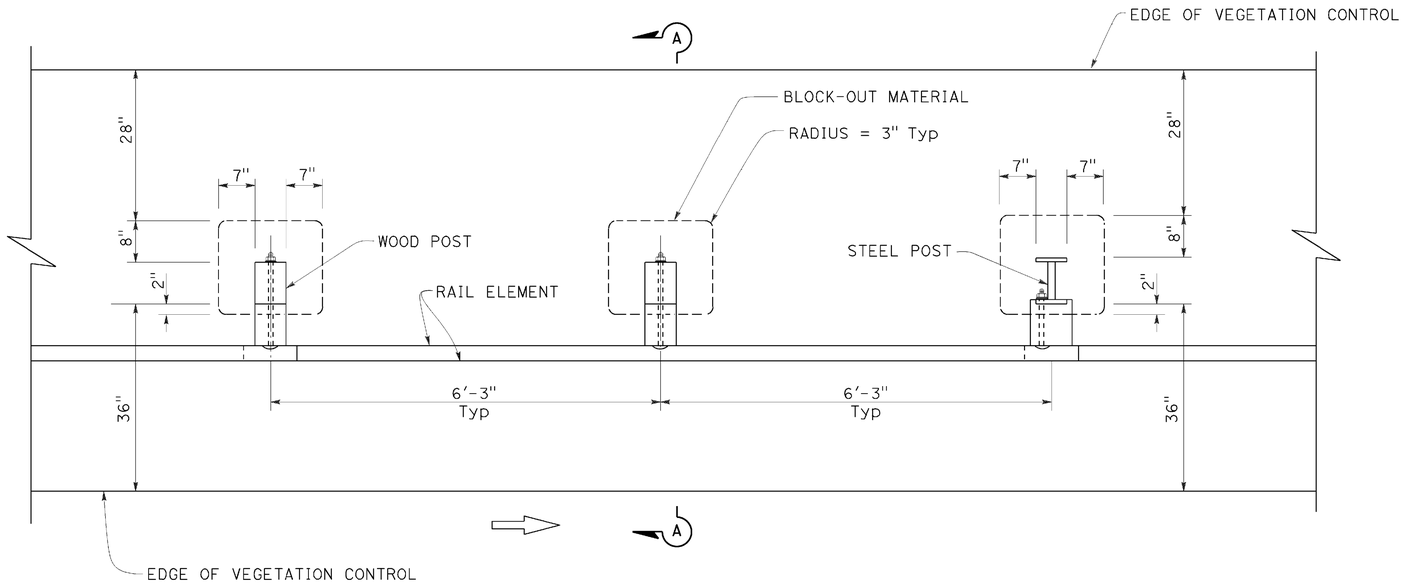

PLAN

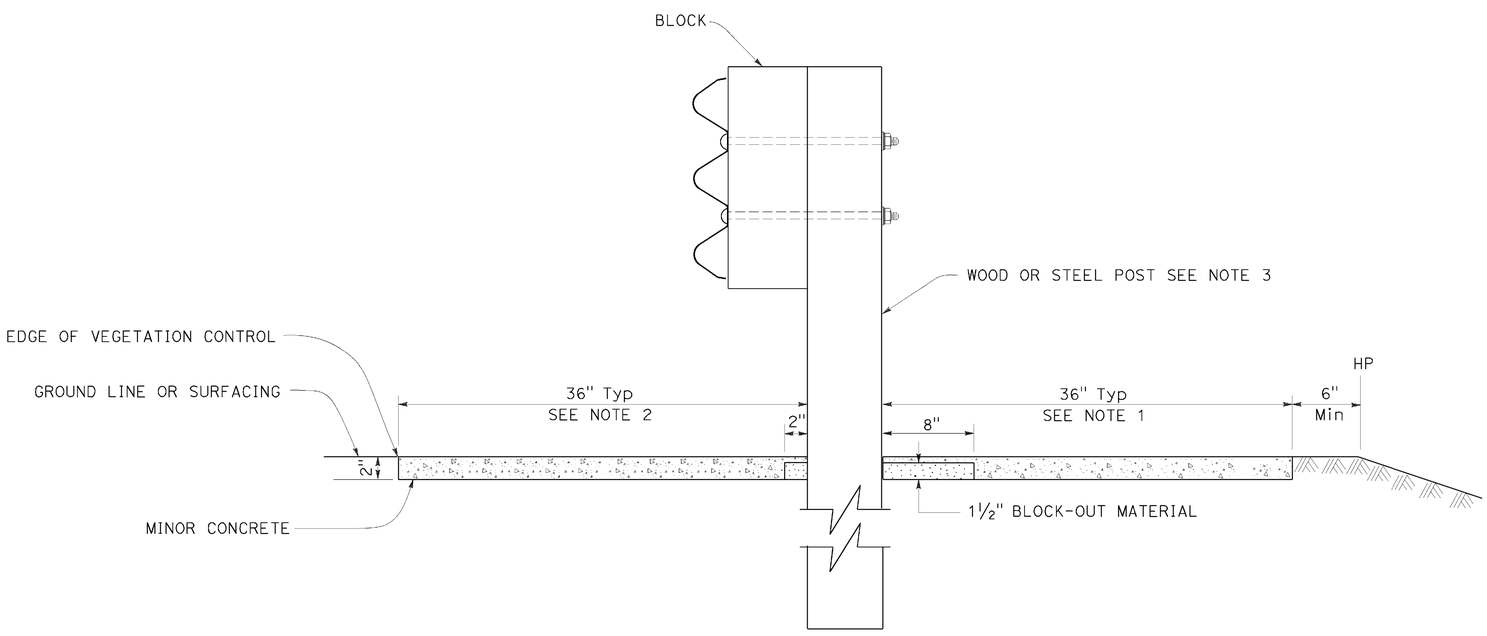

SECTION A-A

NOTES:

1. Where the distance between back of post and hinge point is less than 42", construct vegetation control to 6" from hinge point while maintaining the 8" block-out at back of post. If the 8" block-out at back of post can not be maintained, construct vegetation control flush with the back edge of post.
2. Where dike is constructed under barrier, construct vegetation control to back edge of dike. Where paved shoulder is constructed within 36" in front of the post, construct vegetation control to the edge of paved shoulder.
3. For wood and steel post sizes, see Revised Standard Plan RSP A77N2.
4. For details not shown, see Standard Plan A78B and Revised Standard Plan RSP A78A.

STATE OF CALIFORNIA
DEPARTMENT OF TRANSPORTATION

SINGLE THRIE BEAM BARRIER TYPICAL VEGETATION CONTROL STANDARD BARRIER RAILING SECTION

NO SCALE

RSP A78C3 DATED JULY 19, 2013 SUPERSEDES STANDARD PLAN A78C3
DATED MAY 20, 2011 - PAGE 93 OF THE STANDARD PLANS BOOK DATED 2010.

REVISED STANDARD PLAN RSP A78C3

2010 REVISED STANDARD PLAN RSP A78C3

DATE PLOTTED => 22-AUG-2016
TIME PLOTTED => 15:28

Dist	COUNTY	ROUTE	POST MILES TOTAL PROJECT	SHEET No.	TOTAL SHEETS
02	Sis	96	R52.5/88.4	87	208

Randell D. Hiatt
REGISTERED CIVIL ENGINEER

July 19, 2013
PLANS APPROVAL DATE

REGISTERED PROFESSIONAL ENGINEER
Randell D. Hiatt
No. C50200
Exp. 6-30-15
CIVIL
STATE OF CALIFORNIA

THE STATE OF CALIFORNIA OR ITS OFFICERS OR AGENTS SHALL NOT BE RESPONSIBLE FOR THE ACCURACY OR COMPLETENESS OF SCANNED COPIES OF THIS PLAN SHEET.

TO ACCOMPANY PLANS DATED 06-15-16

NOTES:

1. Line post, blocks and hardware to be used are shown on Standard Plans A78A, A78B and A78C1 and Revised Standard Plan RSP A78C2.
2. Post spacing to be 6'-3" center to center, except as otherwise noted.
3. Except as noted, line posts are 6" x 8" x 6'-0" wood with 6" x 8" x 1'-10" wood blocks. (W6 x 8.5 or W6 x 9) steel posts, 6'-8" in length, with 6" x 8" x 1'-10" notched wood blocks or notched recycled plastic blocks may be used for 6" x 8" x 6'-0" wood posts with 6" x 8" x 1'-10" wood blocks where applicable and when specified.
4. For Transition Railing (Type DTB) details, see Standard Plan A78K.
5. The 15:1 or flatter flare is measured off of the edge of traveled way.

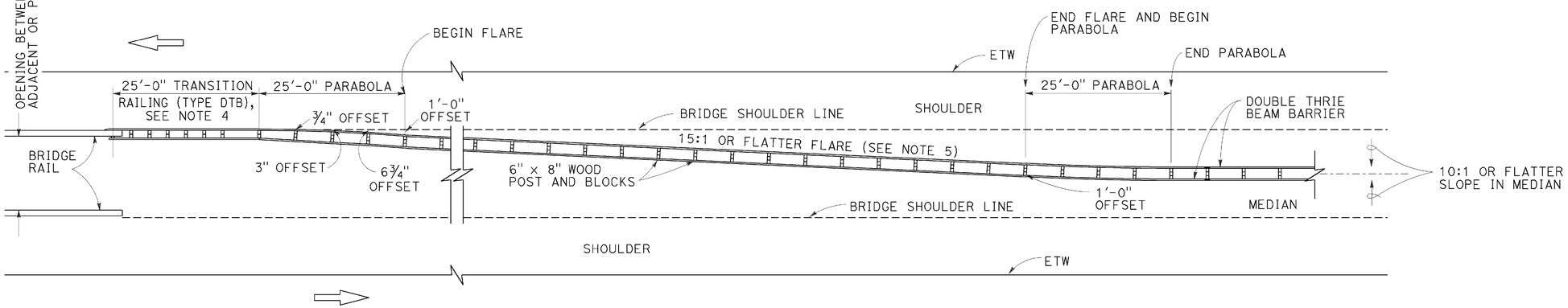

TYPE 25A CONNECTION LAYOUT

STATE OF CALIFORNIA
DEPARTMENT OF TRANSPORTATION

THRIE BEAM BARRIER TYPICAL LAYOUT FOR CONNECTION TO BRIDGE RAILING

NO SCALE

RSP A78H DATED JULY 19, 2013 SUPERSEDES STANDARD PLAN A78H
DATED MAY 20, 2011 - PAGE 105 OF THE STANDARD PLANS BOOK DATED 2010.

REVISED STANDARD PLAN RSP A78H

2010 REVISED STANDARD PLAN RSP A78H

DATE PLOTTED => 22-AUG-2016
TIME PLOTTED => 15:29

Dist	COUNTY	ROUTE	POST MILES TOTAL PROJECT	SHEET No.	TOTAL SHEETS
02	Sis	96	R52.5/88.4	88	208

REGISTERED CIVIL ENGINEER

October 30, 2015
PLANS APPROVAL DATE

REGISTERED PROFESSIONAL ENGINEER Raymond Don Tsztoo No. C37332 Exp. 6-30-16 CIVIL STATE OF CALIFORNIA

THE STATE OF CALIFORNIA OR ITS OFFICERS OR AGENTS SHALL NOT BE RESPONSIBLE FOR THE ACCURACY OR COMPLETENESS OF SCANNED COPIES OF THIS PLAN SHEET.

TO ACCOMPANY PLANS DATED 06-15-16

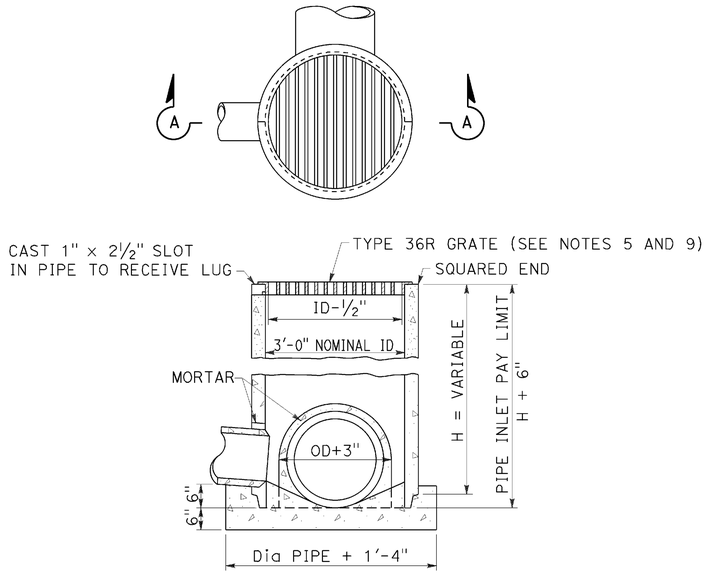

SECTION A-A
TYPE GCP
Concrete pipe inlet with grate

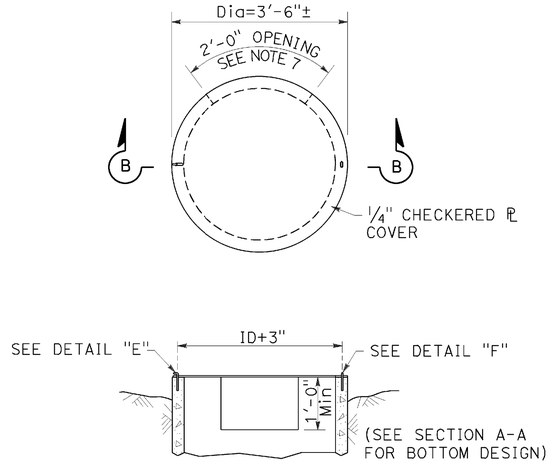

SECTION B-B
TYPE OCP or OCPI
Concrete pipe inlet with steel cover
(See Note 6)

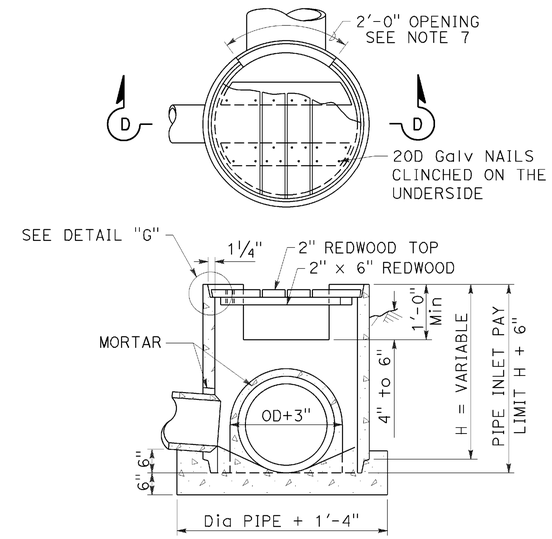

SECTION D-D
TYPE OCP or OCPI
Concrete pipe inlet with redwood cover
(See Notes 6 and 10)

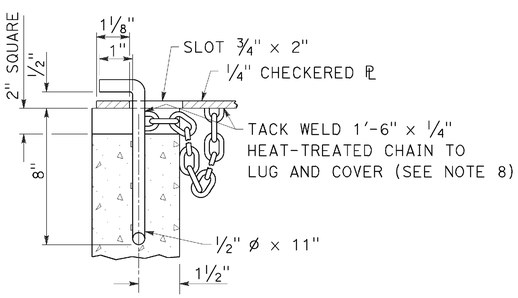

DETAIL "E"

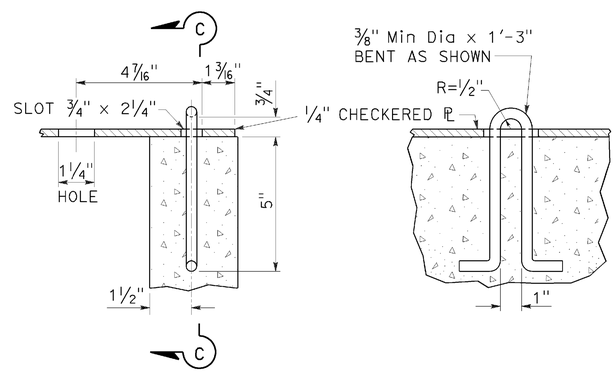

DETAIL "F"

SECTION C-C

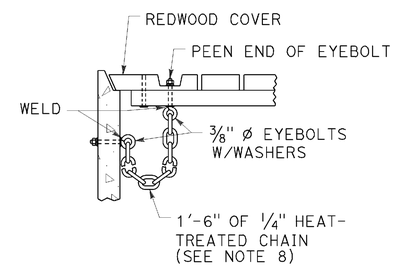

DETAIL "G"

NOTES:

1. For details of steel pipe inlets, see Standard Plan D75A.
2. For details of ladder and steps and when ladder or steps are required, see Standard Plan D75C.
3. Inlet pipes shall not protrude into basin.
4. Except for inlets used for junction boxes, basin floors shall have minimum slope of 4:1 from all directions toward outlet pipe, and a wood trowel finish.
5. See Revised Standard Plans RSP D77A and RSP D77B for Grate and Frame Details and Weights of Miscellaneous Iron and Steel.
6. Designation of Type OCPI pipe inlets on plans indicates trash racks are to be furnished and installed on all side openings. See Standard Plan D75C for Trash Rack details.
7. More than one side opening may be required. Location and number as ordered by the Engineer. Opening may be cast in pipe.
8. Chain to be provided when specified.
9. Place pipe so bars of grate will be parallel with main surface flow.
10. Redwood covers shall only be placed at locations designated on the plans.

STATE OF CALIFORNIA
DEPARTMENT OF TRANSPORTATION

CONCRETE PIPE INLETS

NO SCALE

RSP D75B DATED OCTOBER 30, 2015 SUPERSEDES STANDARD PLAN D75B DATED MAY 20, 2011 - PAGE 162 OF THE STANDARD PLANS BOOK DATED 2010.

REVISED STANDARD PLAN RSP D75B

2010 REVISED STANDARD PLAN RSP D75B

DATE PLOTTED => 22-AUG-2016
TIME PLOTTED => 15:29

Dist	COUNTY	ROUTE	POST MILES TOTAL PROJECT	SHEET No.	TOTAL SHEETS
02	Sis	96	R52.5/88.4	89	208

Raymond Don Tsztoo
REGISTERED CIVIL ENGINEER

April 19, 2013
PLANS APPROVAL DATE

REGISTERED PROFESSIONAL ENGINEER Raymond Don Tsztoo No. C37332 Exp. 6-30-14 CIVIL STATE OF CALIFORNIA

THE STATE OF CALIFORNIA OR ITS OFFICERS OR AGENTS SHALL NOT BE RESPONSIBLE FOR THE ACCURACY OR COMPLETENESS OF SCANNED COPIES OF THIS PLAN SHEET.

TO ACCOMPANY PLANS DATED 06-15-16

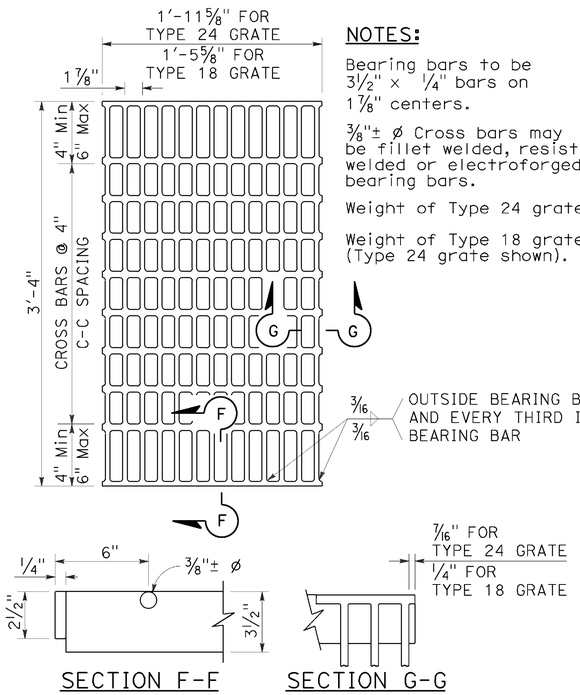

NOTES:

Bearing bars to be 3½" × ¼" bars on 1⅞" centers.

⅜"± ø Cross bars may be fillet welded, resistance welded or electroforged to bearing bars.

Weight of Type 24 grate = 141 LBS.

Weight of Type 18 grate = 107 LBS. (Type 24 grate shown).

SECTION F-F SECTION G-G

TYPE 18-10 AND 24-13 GRATE

(Welded Steel)

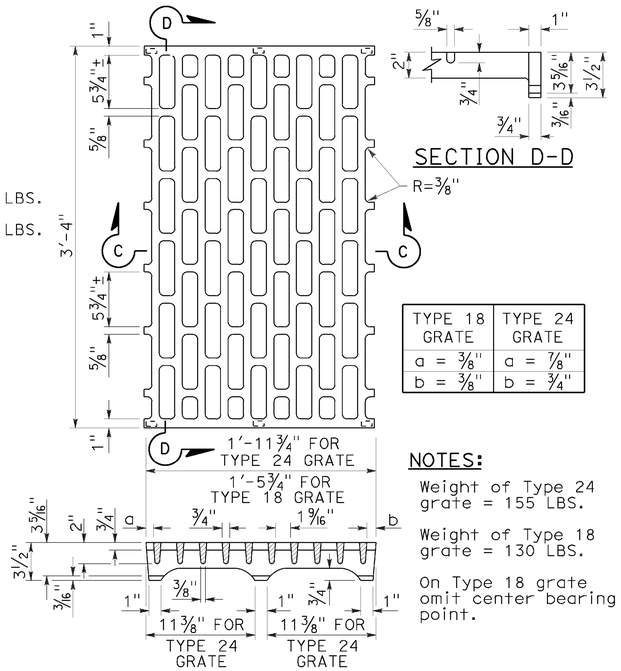

TYPE 18 GRATE	TYPE 24 GRATE
a = ⅜"	a = ⅞"
b = ⅜"	b = ¾"

NOTES:

Weight of Type 24 grate = 155 LBS.

Weight of Type 18 grate = 130 LBS.

On Type 18 grate omit center bearing point.

SECTION C-C

TYPE 18-8C AND 24-10C GRATE

(Cast ductile iron)

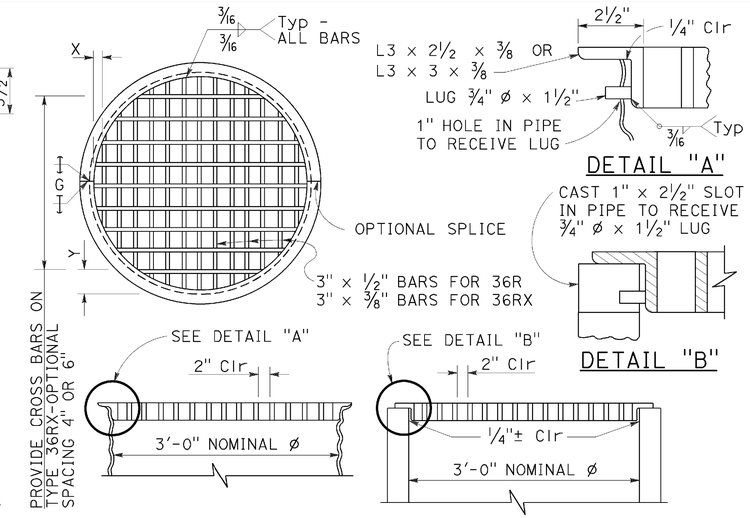

TYPE 36R AND 36RX GRATE DETAILS

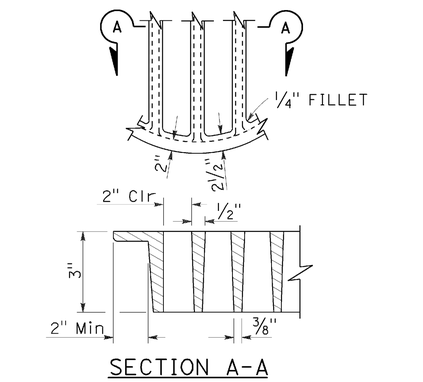

SECTION A-A

ALTERNATIVE CAST DUCTILE IRON GRATE OR CAST CARBON STEEL GRATE TYPE 36R AND 36RX

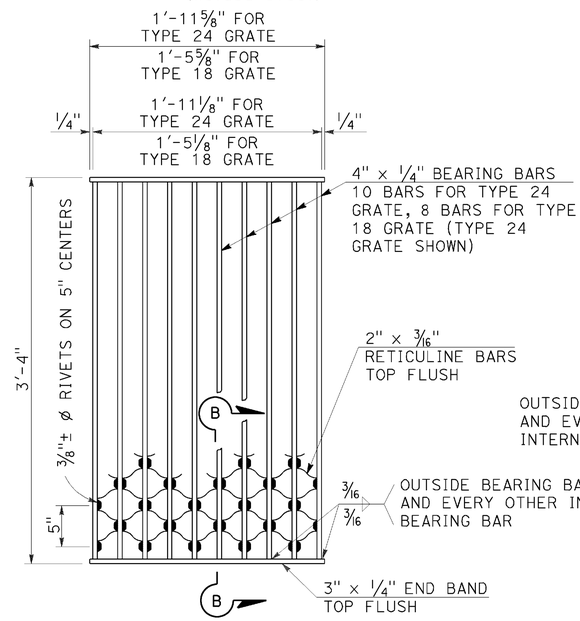

NOTES:

Weight of Type 24 grate = 182 LBS.
Weight of Type 18 grate = 145 LBS.

SECTION B-B

TYPE 18-8S AND 24-10S GRATE

(Welded Steel) Reticuline type

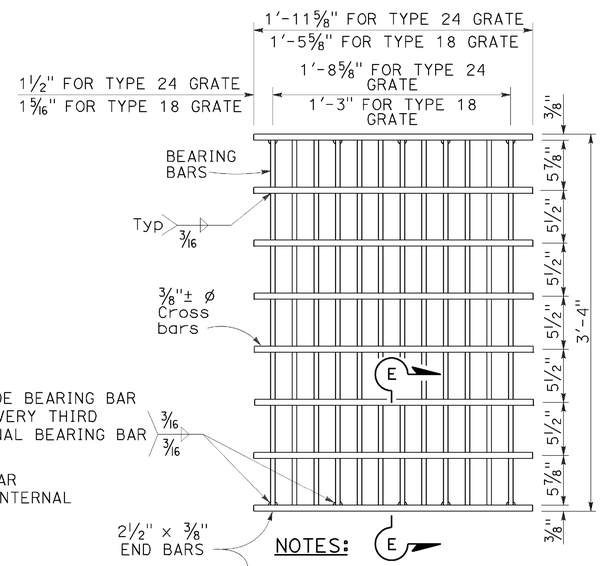

SECTION E-E

NOTES:

Bearing bars to be 3½" × ⅜" bars on 1⅞" centers.

12 Bars for Type 24 grate - 9 bars for Type 18 grates. (Type 24 grate shown).

Weight of Type 24 grate = 192 LBS.

Weight of Type 18 grate = 145 LBS.

⅜"± ø Cross bars may be fillet welded, resistance welded or electroforged to bearing bars.

TYPE 18-9X AND 24-12X GRATE

(Welded Steel)

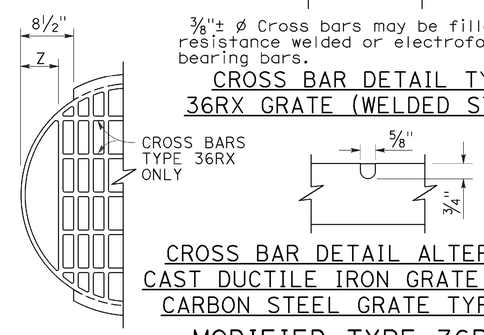

⅜"± ø Cross bars may be fillet welded, resistance welded or electroforged to bearing bars.

CROSS BAR DETAIL TYPE 36RX GRATE (WELDED STEEL)

CROSS BAR DETAIL ALTERNATIVE CAST DUCTILE IRON GRATE OR CAST CARBON STEEL GRATE TYPE 36RX

MODIFIED TYPE 36R AND 36RX GRATE FOR ODI INLET

NOTES:

1. When alternative grates are allowed - Final pay based on alternative with the lesser weight.
2. Use frame shown on Standard Plan D74A, D74B or RSP D77A as appropriate.
3. When Type 24-10S, 24-12X or 24-13 grates are used with GDO Inlets, a ¼" × 3½" × 3'-4⅞" steel bar shall be welded across the center of inlet frame to separate the individual grates.
4. See Revised Standard Plan RSP D77A for connecting chain to welded grate and frame. When chain is required, do not use cast ductile iron grate.

GRATE BAR SPACING TABLE

TYPE	No. OF BARS	CLEAR BAR SPACING	X	Y 4" SPACING	Y 6" SPACING	Z
36R	13	2"	2⅛"	-	-	-
36RX (STEEL)	15	2"	9/16"	3¾"	5¾"	-
36RX (CAST)	13	2"	2⅛"	3¾"	5¾"	-
36R Mod	12	2"	2⅛"	-	-	5"
36RX Mod (STEEL)	13	2"	9/16"	3¾"	5¾"	5 11/16"
36RX Mod (CAST)	12	2"	2⅛"	3¾"	5¾"	5"

BASIS FOR Misc IRON AND STEEL FINAL PAY WEIGHTS FOR DRAINAGE INLETS

INLET TYPE	GRATE TYPE	No. OF GRATES	WEIGHT LB
GDO (SEE NOTE 4)	24-10C	2	391
	24-10S	2	456
	24-12X	2	473
	24-13	2	374
GO,GOL,G1,G2, G3,G4 (TYPE 24)	24-10C	1	202
	24-10S	1	229
	24-12X	1	239
	24-13	1	188
G4 (TYPE 18) G5,G6	18-8S	1	187
	18-9X	1	187
	18-10	1	149
GT1,GT2	18-8S	2	374
	18-9X	2	374
	18-10	2	298
GT3,GT4	24-10C	2	404
	24-10S	2	458
	24-12X	2	478
	24-13	2	376
ODI	36RX (Mod)	1	196
GMP,GCP,GCPI	36RX	1	215
ODI	36R (Mod)	1	220
GMP,GCP,GCPI	36R	1	236
TRASH RACK			22
GRATE CHAIN			3

STATE OF CALIFORNIA
DEPARTMENT OF TRANSPORTATION

GRATE DETAILS No. 2

NO SCALE

RSP D77B DATED APRIL 19, 2013 SUPERSEDES RSP D77B DATED JULY 20, 2012 AND STANDARD PLAN D77B DATED MAY 20, 2011 - PAGE 165 OF THE STANDARD PLANS BOOK DATED 2010.

REVISED STANDARD PLAN RSP D77B

2010 REVISED STANDARD PLAN RSP D77B

DATE PLOTTED => 22-AUG-2016
TIME PLOTTED => 15:30

Dist	COUNTY	ROUTE	POST MILES TOTAL PROJECT	SHEET No.	TOTAL SHEETS
02	Sis	96	R52.5/88.4	90	208

Gregory A. Balzer
LICENSED LANDSCAPE ARCHITECT

July 19, 2013
PLANS APPROVAL DATE

LICENSED LANDSCAPE ARCHITECT
Gregory A. Balzer 2576
Gregory A. Balzer
02-28-15
Renewal Date
7-19-13
Date
STATE OF CALIFORNIA

THE STATE OF CALIFORNIA OR ITS OFFICERS OR AGENTS SHALL NOT BE RESPONSIBLE FOR THE ACCURACY OR COMPLETENESS OF SCANNED COPIES OF THIS PLAN SHEET.

TO ACCOMPANY PLANS DATED 06-15-16

A

AB	AGGREGATE BASE
ABS	ACRYLONITRILE-BUTADIENE-STYRENE
AC	ASPHALT CONCRETE
ACC	ARMOR-CLAD CONDUCTORS
Adj	ADJACENT/ADJUSTABLE
AIC	AUXILIARY IRRIGATION CONTROLLER
Alt	ALTERNATIVE
AMEND	AMENDMENT
ARV	AIR RELEASE VALVE
AUTO	AUTOMATIC
AUX	AUXILIARY
AVB	ATMOSPHERIC VACUUM BREAKER

B

B&B	BALLED AND BURLAPPED
B/B	BRASS/BRONZE
B/B/PL	BRASS/BRONZE/PLASTIC
B/PL	BRASS/PLASTIC
BFM	BONDED FIBER MATRIX
Bit Ctd	BITUMINOUS COATED
BP	BOOSTER PUMP
BPA	BACKFLOW PREVENTER ASSEMBLY
BPE	BACKFLOW PREVENTER ENCLOSURE
BV	BALL VALVE

C

C	CONDUIT
CAP	CORRUGATED ALUMINUM PIPE
CARV	COMBINATION AIR RELEASE VALVE
CB	COUPLING BAND
CCA	CAM COUPLER ASSEMBLY
CEC	CONTROLLER ENCLOSURE CABINET
CHDPE	CORRUGATED HIGH DENSITY POLYETHYLENE
CL	CHAIN LINK
CNC	CONTROL AND NEUTRAL CONDUCTORS
Conc	CONCRETE
CP	COPPER PIPE
CS	COMPOST SOCK
CSP	CORRUGATED STEEL PIPE
CST	CENTER STRIP
CV	CHECK VALVE

D

Dia	DIAMETER
DIP	DUCTILE IRON PIPE
DIT	DRIP IRRIGATION TUBING
DG	DECOMPOSED GRANITE
DN	DIAMETER NOMINAL
DVA	DRIP VALVE ASSEMBLY

E

EC	EROSION CONTROL
ECTC	EROSION CONTROL TECHNOLOGY COUNCIL
Elect	ELECTRIC/ELECTRICAL
Elev	ELEVATION
ELL	ELBOW
ENCL	ENCLOSURE
EP	EDGE OF PAVEMENT
ES	EDGE OF SHOULDER
EST	END STRIP
ESTB	ESTABLISHMENT
ETW	EDGE OF TRAVELED WAY

F

F	FULL CIRCLE
F/P	FULL/PART CIRCLE
FCV	FLOW CONTROL VALVE
FERT	FERTILIZER
FG	FINISHED GRADE
FH	FLEXIBLE HOSE
FIPT	FEMALE IRON PIPE THREAD
FIS	FERTILIZER INJECTOR SYSTEM
FL	FLOW LINE
FR	FIBER ROLL
FS	FLOW SENSOR
FSC	FLOW SENSOR CABLE
FV	FLUSH VALVE

G

Galv	GALVANIZED
GARV	GARDEN VALVE
GARVA	GARDEN VALVE ASSEMBLY
GM	GRAVEL MULCH
GPH	GALLONS PER HOUR
GPM	GALLONS PER MINUTE
GSP	GALVANIZED STEEL PIPE
GV	GATE VALVE

H

H	HALF CIRCLE
HDPE	HIGH DENSITY POLYETHYLENE
HP	HORSEPOWER/HINGE POINT
HPL	HIGH PRESSURE LINE
Hwy	HIGHWAY

I

IC	IRRIGATION CONTROLLER
ICC	IRRIGATION CONTROLLER(S) IN CONTROLLER ENCLOSURE CABINET
ID	INSIDE DIAMETER
IFS	IRRIGATION FILTRATION SYSTEM
IPS	IRON PIPE SIZE
IPT	IRON PIPE THREAD
Irr	IRRIGATION

L

L	LENGTH

M

Max	MAXIMUM
MBGR	METAL BEAM GUARD RAILING
MCV	MANUAL CONTROL VALVE
MIC	MASTER IRRIGATION CONTROLLER
Min	MINIMUM
MIPT	MALE IRON PIPE THREAD
Misc	MISCELLANEOUS
Mtl	MATERIAL
MVP	MAINTENANCE VEHICLE PULLOUT

N

NCN	NO COMMON NAME
NL	NOZZLE LINE
No.	NUMBER
NPT	NATIONAL PIPE THREAD

O

O/C	ON CENTER
OD	OUTSIDE DIAMETER
OL	OVERLAP

P

P	PART CIRCLE
PB	PULL BOX
PCC	PORTLAND CEMENT CONCRETE
PE	POLYETHYLENE
Pkt	PACKET
PL	PLASTIC
PLS	PURE LIVE SEED
PLT	PLANT/PLANTING
PLT ESTB	PLANT ESTABLISHMENT
PM	POST MILE
PR	PRESSURE RATED
PRLV	PRESSURE RELIEF VALVE
PRV	PRESSURE REGULATING VALVE
PVC	POLYVINYL CHLORIDE
Pvmt	PAVEMENT

Q

Q	QUARTER CIRCLE
QCV	QUICK COUPLING VALVE

R

R	RADIUS
RCP	REINFORCED CONCRETE PIPE
RCV	REMOTE CONTROL VALVE
RCVM	REMOTE CONTROL VALVE (MASTER)
RCVMF	REMOTE CONTROL VALVE (MASTER) W/FLOW SENSOR
RCVP	REMOTE CONTROL VALVE W/PRESSURE REGULATOR
RCW	RECYCLED WATER
RECP	ROLLED EROSION CONTROL PRODUCT
REQ	REQUIRED
RICS	REMOTE IRRIGATION CONTROL SYSTEM
R/W	RIGHT OF WAY

S

S	SLIP
SCH	SCHEDULE
SF	STATE-FURNISHED
Shld	SHOULDER
Sq	SQUARE
SST	SIDE STRIP
Sta	STATION
Std	STANDARD
SW	SIDEWALK/SOUND WALL

T

T	THIRD CIRCLE/THREAD
TLS	TRUCK LOADING STANDPIPE
TQ	THREE QUARTER CIRCLE
TRM	TURF REINFORCEMENT MAT
TT	TWO-THIRDS CIRCLE
TWSA	TREE WELL SPRINKLER ASSEMBLY
Typ	TYPICAL

U

UG	UNDERGROUND

W

W	WIDTH
W/	WITH
WM	WATER METER
WS	WYE STRAINER
WSA	WYE STRAINER ASSEMBLY
WSP	WELDED STEEL PIPE
WWM	WELDED WIRE MESH

NOTE:

For additional abbreviations, see Standard Plans A10A and A10B.

STATE OF CALIFORNIA
DEPARTMENT OF TRANSPORTATION

LANDSCAPE AND EROSION CONTROL ABBREVIATIONS

NO SCALE

RSP H1 DATED JULY 19, 2013 SUPERSEDES STANDARD PLAN H1 DATED MAY 20, 2011 - PAGE 218 OF THE STANDARD PLANS BOOK DATED 2010.

REVISED STANDARD PLAN RSP H1

2010 REVISED STANDARD PLAN RSP H1

DATE PLOTTED => 22-AUG-2016
TIME PLOTTED => 15:30

Dist	COUNTY	ROUTE	POST MILES TOTAL PROJECT	SHEET No.	TOTAL SHEETS
02	Sis	96	R52.5/88.4	91	208

Devinder Singh
REGISTERED CIVIL ENGINEER

October 30, 2015
PLANS APPROVAL DATE

REGISTERED PROFESSIONAL ENGINEER
Devinder Singh
No. C50470
Exp. 6-30-17
CIVIL
STATE OF CALIFORNIA

THE STATE OF CALIFORNIA OR ITS OFFICERS OR AGENTS SHALL NOT BE RESPONSIBLE FOR THE ACCURACY OR COMPLETENESS OF SCANNED COPIES OF THIS PLAN SHEET.

TO ACCOMPANY PLANS DATED 06-15-16

NOTES:

See Revised Standard Plan RSP T9 for tables.

Use cone spacing X for taper segment, Y for tangent segment or Z for conflict situations, as approriate, per Table 1, unless X, Y, or Z cone spacing is shown on this sheet.

Unless otherwise specified in the special provisions, all temporary warning signs shall have black legend on fluorescent orange background.

California codes are designated by (CA). Otherwise, Federal (MUTCD) codes are shown.

TYPICAL LANE CLOSURE WITH REVERSIBLE CONTROL

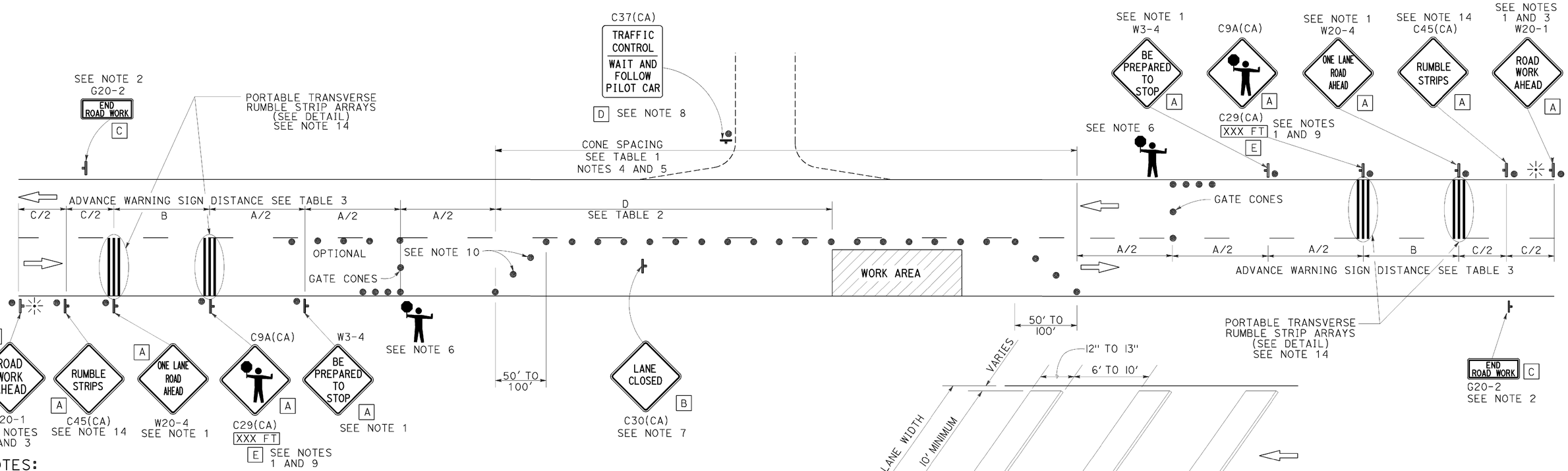

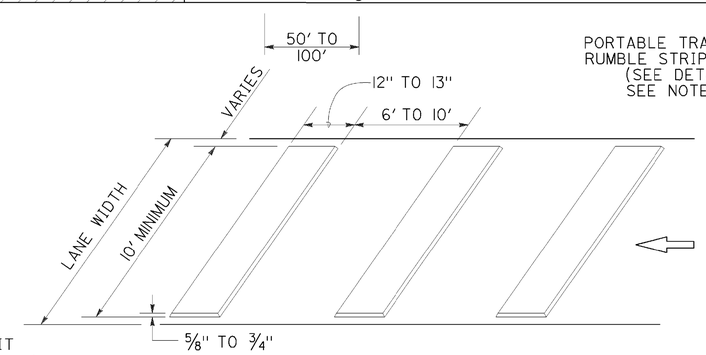

PORTABLE TRANSVERSE RUMBLE STRIP ARRAY DETAIL

NOTES:

1. Each advance warning sign in each direction of travel shall be equipped with at least two flags for daytime closure. Each flag shall be at least 16" x 16" in size and shall be orange or fluorescent red-orange in color. Flashing beacons shall be placed at the locations indicated for lane closure during hours of darkness.
2. A G20-2 "END ROAD WORK" sign, as appropriate, shall be placed at the end of the lane control unless the end of work area is obvious, or ends within a larger project's limits.
3. If the W20-1 sign would follow within 2000' of a stationary W20-1 or G20-1 "ROAD WORK NEXT _____ MILES", use a W20-4 sign for the first advance warning sign.
4. All cones used for lane closures during the hours of darkness shall be fitted with retroreflective bands (or sleeves) as specified in the specifications.
5. Portable delineators, placed at one-half the spacing indicated for traffic cones, may be used instead of cones for daytime closures only.
6. Additional advance flaggers may be required. Flagger should stand in a conspicuous place, be visible to approaching traffic as well as approaching vehicles after the first vehicle has stopped. During the hours of darkness, the flagging-station and flagger shall be illuminated and clearly visible to approaching traffic. The illumination footprint of the lighting on the ground shall be at least 20' in diameter. Place a minimum of four cones at 50' intervals in advance of flagger station as shown.
7. Place C30(CA) "LANE CLOSED" sign at 500' to 1000' intervals throughout extended work areas. They are optional if the work area is visible from the flagger station.
8. When a pilot car is used, place a C37(CA) "TRAFFIC CONTROL-WAIT AND FOLLOW PILOT CAR" sign with black legend on white background at all intersections, driveways and alleys without a flagger within traffic control area. Signs shall be clean and visible at all times. Where traffic can not be effectively self-regulated, at least one flagger shall be used at each intersection within traffic control area.
9. An optional C29(CA) sign may be placed below the C9A(CA) sign.
10. Either traffic cones or barricades shall be placed on the taper. Barricades shall be Type I, II, or III.
11. The color of the portable transverse rumble strips shall be black or orange. Use 2 arrays, each array shall consist of 3 rumble strips.
12. Portable transverse rumble strips shall not be placed on sharp horizontal or vertical curves nor shall they be placed through pedestrian crossings.
13. If the portable transverse rumble strips become out of alignment (skewed) by more than 6 inches, measured from one end to the other, they shall be readjusted to bring the placement back to the original location.
14. Portable transverse rumble strips are not required if any one of the following conditions is satisfied:
    A. Work duration occupies a location for four hours or less
    B. Posted speed limit is below 45 MPH
    C. Work is of emergency nature
    D. Work zone is in snow or icy weather conditions

LEGEND

- TRAFFIC CONE
- TEMPORARY TRAFFIC CONTROL SIGN
- PORTABLE FLASHING BEACON
- FLAGGER

SIGN PANEL SIZE (Min)

A	48" x 48"
B	30" x 30"
C	36" x 18"
D	36" x 42"
E	20" x 7"

STATE OF CALIFORNIA
DEPARTMENT OF TRANSPORTATION

TRAFFIC CONTROL SYSTEM FOR LANE CLOSURE ON TWO LANE CONVENTIONAL HIGHWAYS

NO SCALE

RSP T13 DATED OCTOBER 30, 2015 SUPERSEDES RSP T13 DATED OCTOBER 17, 2014, RSP T13 DATED JULY 18, 2014 AND RSP T13 DATED APRIL 19, 2013 AND STANDARD PLAN T13 DATED MAY 20, 2011 - PAGE 241 OF THE STANDARD PLANS BOOK DATED 2010.

REVISED STANDARD PLAN RSP T13

2010 REVISED STANDARD PLAN RSP T13

DATE PLOTTED => 22-AUG-2016
TIME PLOTTED => 15:31

Dist	COUNTY	ROUTE	POST MILES TOTAL PROJECT	SHEET No.	TOTAL SHEETS
02	Sis	96	R52.5/88.4	92	208

REGISTERED CIVIL ENGINEER

April 19, 2013
PLANS APPROVAL DATE

REGISTERED PROFESSIONAL ENGINEER
Gurinderpal Bhullar
No. C48815
Exp. 9-30-14
CIVIL
STATE OF CALIFORNIA

THE STATE OF CALIFORNIA OR ITS OFFICERS OR AGENTS SHALL NOT BE RESPONSIBLE FOR THE ACCURACY OR COMPLETENESS OF SCANNED COPIES OF THIS PLAN SHEET.

TO ACCOMPANY PLANS DATED 06-15-16

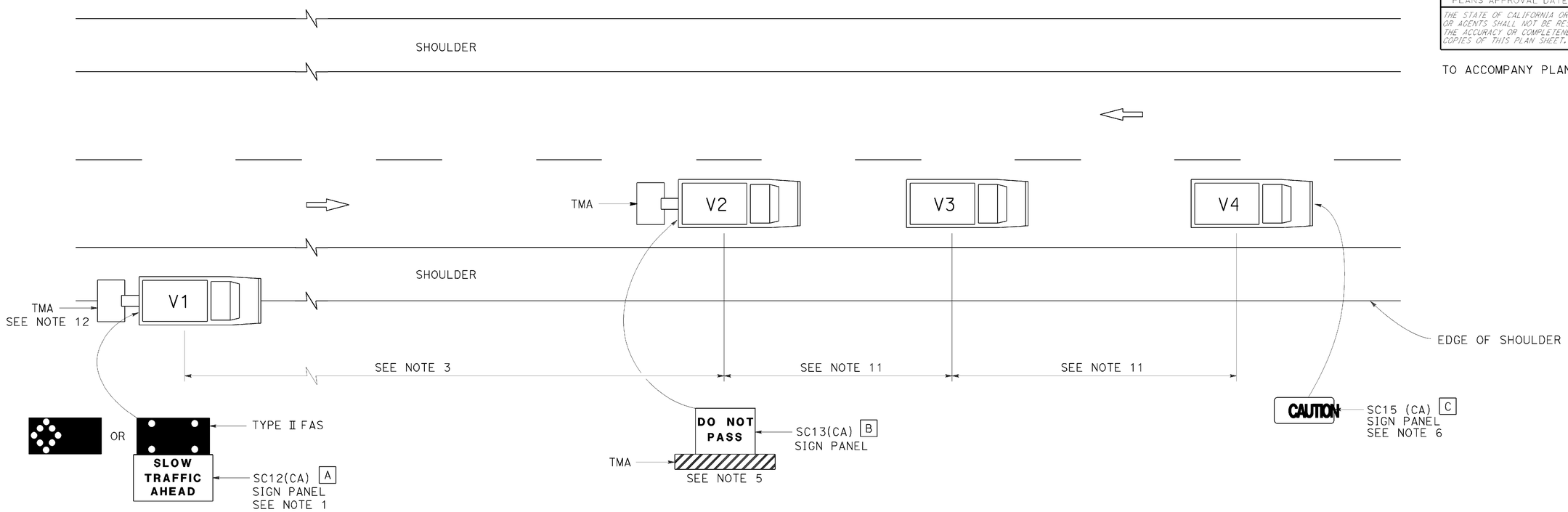

LEGEND

V1	SIGN VEHICLE
V2	SHADOW VEHICLE
V3	WORK/APPLICATION VEHICLE
V4	SIGN VEHICLE
TMA	TRUCK-MOUNTED ATTENUATOR
	FLASHING ARROW SIGN (FAS) IN FLASHING CAUTION MODE
	FLASHING ARROW SIGN (FAS) IN ALTERNATING DIAMOND CAUTION

SIGN PANEL SIZE (Min)

A	72" x 42"
B	54" x 42"
C	54" x 24"

NOTES:

1. Either a changeable message sign or a SC12(CA) "SLOW TRAFFIC AHEAD" sign shall be mounted on the rear of sign vehicle V1. The changeable message sign shall be sequenced to show the "CAUTION" message first, follow by the "SLOW TRAFFIC AHEAD" message. A Type II flashing arrow sign may be used with the SC12(CA) sign panel.
2. Sign vehicle V1 should be positioned where highly visible when shoulders are not available.
3. If traffic queues develop, sign vehicle V1 should be positioned upstream from the end of queue.
4. Vehicle-mounted sign panels shall have Type III or above retroreflective sheeting, black on white, or black on fluorescent orange, with 6" minimum series D letters per Caltrans sign specifications.
5. Shadow vehicle shall be equipped with a truck-mounted attenuator. The sign panel shown shall be mounted on the rear of shadow vehicle V2. The message "LANE CLOSED" may be used in place of the "DO NOT PASS" message.
6. The sign panel shown shall be mounted on the front of sign vehicle V4, facing opposing traffic.
7. All vehicles shall be equipped with flashing or rotating amber lights.
8. Sign vehicle V4 will not be required when the work and vehicles V2 and V3 are 2' or more from the centerline of the highway during the work or application operations.
9. All vehicles used for lane closures shall be equipped with two-way radios and the vehicle operators shall maintain communication during the work or application operation.
10. This plan shall not be used where workers would be on foot in the work area. Use a stationary type lane closure (Revised Standard Plan T13) for this condition.
11. Minimize spacing between vehicles V2 and V3 and vehicles V3 and V4 to deter road users from driving in between them.
12. If sign vehicle V1 encroaches into the traffic lane due to insufficient shoulder width, sign vehicle V1 shall be equipped with a truck-mounted attenuator. Sign vehicle V1 shall stay as close to the edge of shoulder as practicable.

STATE OF CALIFORNIA
DEPARTMENT OF TRANSPORTATION

TRAFFIC CONTROL SYSTEM FOR MOVING LANE CLOSURE ON TWO LANE HIGHWAYS

NO SCALE

RSP T17 DATED APRIL 19, 2013 SUPERSEDES STANDARD PLAN T17
DATED MAY 20, 2011 - PAGE 245 OF THE STANDARD PLANS BOOK DATED 2010.

REVISED STANDARD PLAN RSP T17

2010 REVISED STANDARD PLAN RSP T17

DATE PLOTTED => 22-AUG-2016
TIME PLOTTED => 15:31

Dist	COUNTY	ROUTE	POST MILES TOTAL PROJECT	SHEET No.	TOTAL SHEETS
02	Sis	96	R52.5/88.4	93	208

Gary Wang
REGISTERED CIVIL ENGINEER

April 20, 2012
PLANS APPROVAL DATE

REGISTERED PROFESSIONAL ENGINEER Gary Wang No. C58298 Exp. 6-30-12 CIVIL STATE OF CALIFORNIA

THE STATE OF CALIFORNIA OR ITS OFFICERS OR AGENTS SHALL NOT BE RESPONSIBLE FOR THE ACCURACY OR COMPLETENESS OF SCANNED COPIES OF THIS PLAN SHEET.

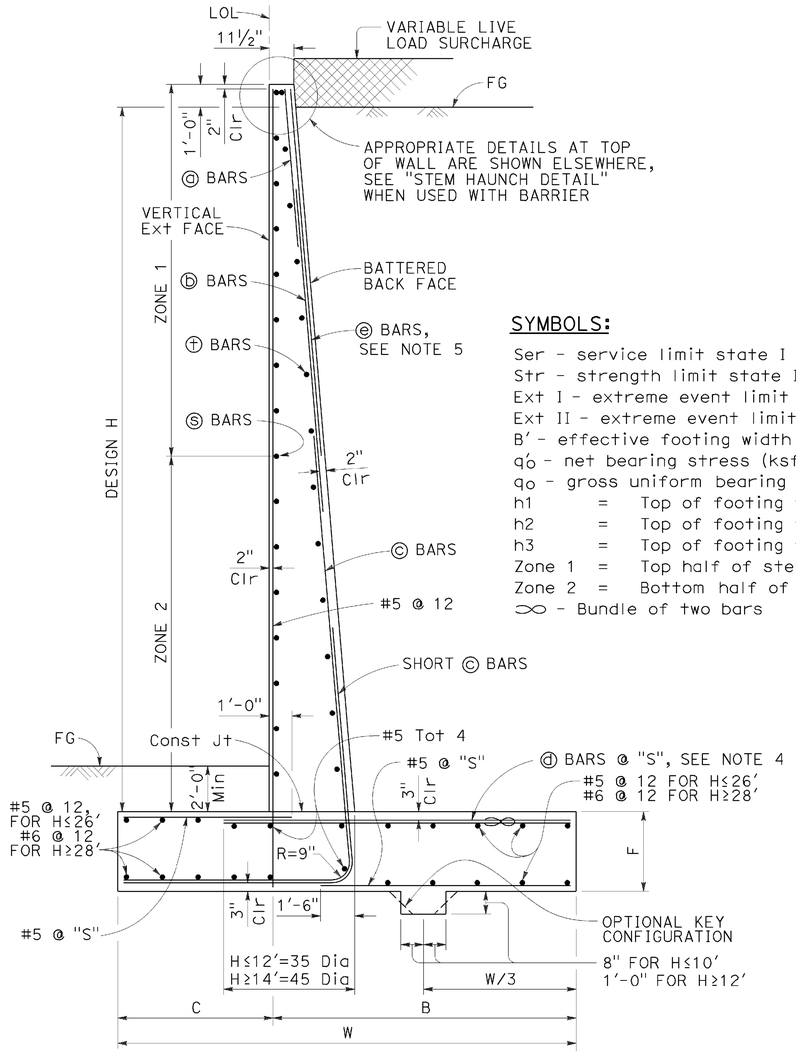

TYPICAL SECTION

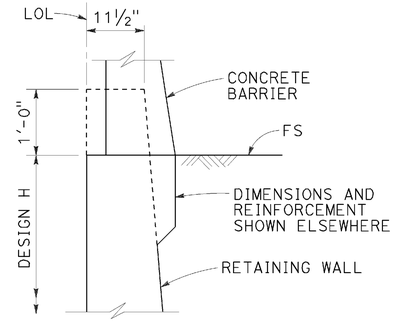

STEM HAUNCH DETAIL

SYMBOLS:

Ser - service limit state I
Str - strength limit state I
Ext I - extreme event limit state I
Ext II - extreme event limit state II
B' - effective footing width (ft)
q_o' - net bearing stress (ksf), OG assumed to be FG at toe
q_o - gross uniform bearing stress (ksf)
h1 = Top of footing to top of short ⓒ bar
h2 = Top of footing to top of ⓒ bar
h3 = Top of footing to top of ⓓ bar
Zone 1 = Top half of stem height
Zone 2 = Bottom half of stem height
∞ - Bundle of two bars

DESIGN CONDITIONS:

Design H may be exceeded by 6" before going to the next size. Special footing design is required where foundation material is incapable of supporting bearing stress listed in the table.

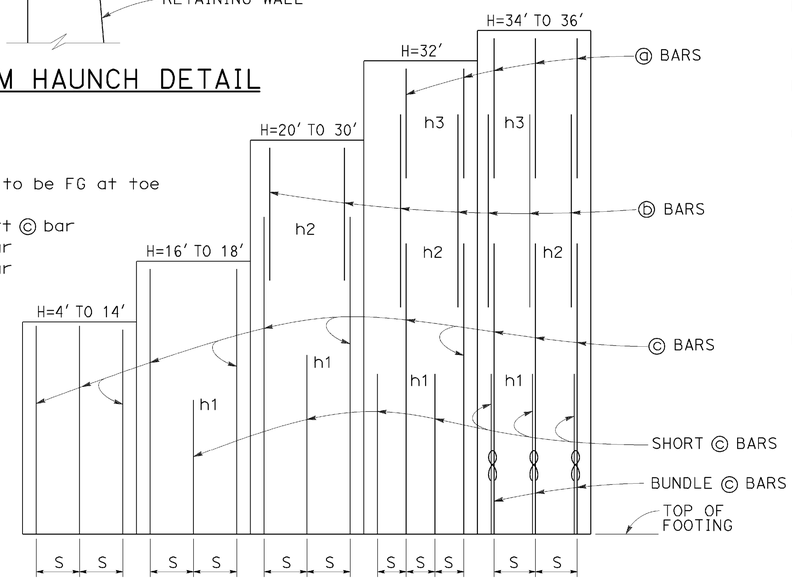

ELEVATION

DESIGN NOTES:

TO ACCOMPANY PLANS DATED 06-15-16

DESIGN: AASHTO LRFD Bridge Design Specifications, 4th Edition with California Amendments

LS: Varied surcharge on level ground surface

DC: Stem Architectural Treatment of thickness up to 6" of concrete (75 psf) considered

CT: 54 kip transverse force applied at He = 32", distributed over 10 feet at the top of wall and 1 : 1 distribution down and outward. Distribution below footing taken no less than 40'.

SEISMIC: $k_h = 0.2$, $k_v = 0.0$

SOIL: $\phi = 34°$, $\gamma = 120$ pcf

REINFORCED CONCRETE: f'c = 3,600 psi
fy = 60,000 psi

LOAD COMBINATIONS AND LIMIT STATES:

Service I	Q = 1.00DC+1.00EV+1.00EH+1.00LS
Strength I	Q = αDC+βEV+ηEH+1.75LS
Extreme I	Q = 1.00DC+1.00EV+1.00EH+1.00EQD+1.00EQE
Extreme II	Q = 1.00DC+1.00EV+1.00EH+1.00CT

Where:

Q:	Force Effects
α:	1.25 or 0.90, Whichever Controls Design
β:	1.35 or 1.00, Whichever Controls Design
η:	1.50 or 0.90, Whichever Controls Design
DC:	Dead Load of Structure Components
EH:	Horizontal Earth Fill Pressure
EV:	Vertical Earth Pressure from Earth Fill Weight
LS:	Live Load Surcharge
EQE:	Seismic Earth Pressure
EQD:	Soil and Structural and Nonstructural Components Inertia
CT:	Vehicular Collision Force

TABLE OF REINFORCING STEEL, DIMENSIONS AND DATA

DESIGN H	4'	6'	8'	10'	12'	14'	16'	18'	20'	22'	24'	26'	28'	30'	32'	34'	36'
W	6'-10"	7'-0"	7'-3"	7'-7"	8'-4"	9'-7"	10'-9"	12'-0"	13'-3"	14'-6"	15'-9"	17'-1"	18'-5"	19'-10"	21'-2"	22'-7"	24'-0"
C	2'-2"	2'-3"	2'-3"	2'-4"	2'-6"	3'-0"	3'-6"	4'-0"	4'-6"	5'-0"	5'-5"	6'-0"	6'-6"	7'-2"	7'-8"	8'-2"	9'-0"
B	4'-8"	4'-9"	5'-0"	5'-3"	5'-10"	6'-7"	7'-3"	8'-0"	8'-9"	9'-6"	10'-4"	11'-1"	11'-11"	12'-8"	13'-6"	14'-5"	15'-0"
F	1'-4"	1'-4"	1'-4"	1'-4"	1'-6"	1'-8"	1'-8"	1'-9"	1'-9"	1'-11"	2'-2"	2'-5"	2'-10"	3'-3"	3'-6"	4'-0"	4'-3"
BATTER	½: 12	½: 12	½: 12	½: 12	½: 12	½: 12	½: 12	½: 12	½: 12	½: 12	⅝: 12	⅝: 12	¾: 12	⅞: 12	1 : 12	1 : 12	1 : 12
SPACING "S"	9"	9"	9"	9"	9"	7"	6"	5"	6"	6"	6"	6"	6"	6"	6"	10"	8"
ⓐ BARS	-	-	-	-	-	-	-	-	-	-	-	-	-	-	#7	#7	#6
ⓑ BARS	-	-	-	-	-	-	-	-	#7	#7	#7	#7	#7	#7	#9	#9	#8
ⓒ BARS	#6	#6	#6	#6	#6	#6	#7	#7	#8	#9	#9	#10	#10	#10	#11	#11	#11
ⓓ BARS	#5	#5	#6	#6	#6	#6	#9	#8	#8	#9	#9	#10	#10	#10	#11	#11	#11
h1	-	-	-	-	-	-	5'-9"	5'-10"	8'-0"	9'-0"	10'-1"	11'-0"	12'-1"	13'-0"	13'-0"	12'-7"	11'-6"
h2	-	-	-	-	-	-	-	-	10'-5"	13'-0"	14'-7"	17'-6"	19'-0"	20'-5"	19'-0"	18'-0"	20'-2"
h3	-	-	-	-	-	-	-	-	-	-	-	-	-	-	21'-2"	21'-10"	24'-0"
ZONE 1 ⓢ BARS	#5 @ 18	#5 @ 18	#5 @ 18	#5 @ 18	#5 @ 18	#5 @ 18	#5 @ 18	#5 @ 18	#5 @ 18	#5 @ 18	#5 @ 12	#5 @ 12	#5 @ 12	#5 @ 12	#5 @ 12	#5 @ 12	#5 @ 12
ZONE 2 ⓢ BARS	#5 @ 18	#5 @ 18	#5 @ 18	#5 @ 18	#5 @ 18	#5 @ 18	#5 @ 12	#5 @ 12	#5 @ 12	#5 @ 12	#5 @ 12	#5 @ 12	#6 @ 12	#6 @ 12	#6 @ 12	#7 @ 12	#7 @ 12
ZONE 1 ⓣ BARS	#4 @ 18	#4 @ 18	#4 @ 18	#4 @ 18	#4 @ 18	#4 @ 18	#4 @ 18	#4 @ 18	#4 @ 18	#4 @ 18	#4 @ 12	#4 @ 12	#4 @ 18	#4 @ 12	#4 @ 12	#4 @ 12	#4 @ 12
ZONE 2 ⓣ BARS	#4 @ 18	#4 @ 18	#4 @ 18	#4 @ 18	#4 @ 18	#4 @ 18	#4 @ 18	#4 @ 18	#4 @ 18	#4 @ 18	#4 @ 12	#4 @ 12	#4 @ 12	#4 @ 12	#5 @ 12	#5 @ 12	#5 @ 12
Ser: B', q_o'	6.8, 0.7	6.5, 1.0	6.2, 1.3	6.0, 1.6	6.3, 2.0	7.5, 2.1	8.6, 2.2	9.8, 2.3	11.0, 2.4	12.1, 2.5	13.2, 2.8	14.4, 2.9	15.5, 3.1	16.8, 3.3	18.0, 3.5	19.2, 3.7	20.6, 3.7
Str: B', q_o	6.6, 1.6	5.0, 1.8	3.6, 2.3	3.0, 3.3	3.2, 4.0	4.3, 3.8	5.3, 3.7	6.4, 3.7	7.4, 3.8	8.2, 4.1	9.0, 4.4	9.9, 4.6	10.7, 4.9	11.7, 5.2	12.6, 5.4	13.6, 5.8	14.6, 5.9
Ext I: B', q_o	5.2, 1.1	4.7, 1.5	3.9, 2.2	3.1, 3.4	2.8, 4.8	3.2, 5.3	3.6, 5.7	4.1, 6.1	4.6, 6.4	5.0, 6.9	5.3, 7.6	5.8, 8.1	6.1, 8.9	6.7, 9.4	7.1, 10.0	7.5, 10.7	8.2, 10.9
Ext II: B', q_o	2.6, 2.2	2.7, 2.6	2.8, 3.1	2.9, 3.6	3.7, 3.6	5.2, 3.3	6.7, 3.1	8.3, 3.0	9.8, 3.0	11.2, 3.1	12.5, 3.2	13.9, 3.4	15.2, 3.6	16.7, 3.8	18.0, 4.0	19.3, 4.2	20.8, 4.3

NOTES:

1. For details not shown and drainage notes see RSP B3-5
2. For wall stem joint details see B0-3/3-3 and B0-3/3-4
3. At ⓒ bars:
   H ≤ 6', no splices are allowed within 1'-8" above the top of footing.
   H > 6', no splices are allowed within H/4 above the top of footing.
4. Bundle ⓓ bars for H = 34' & 36'.
5. Provide #6 @ 10" x 15'-0" ⓔ bars over a distance of 8'-0" measured from all expansion joints, begin wall and end wall locations. For H ≤ 14', hook ⓔ bar into footing and reduce bar length as needed to maintain Min Clr cover.

STATE OF CALIFORNIA
DEPARTMENT OF TRANSPORTATION

RETAINING WALL TYPE 1 (CASE 1)

NO SCALE

RSP B3-1A DATED APRIL 20, 2012 SUPPLEMENTS THE STANDARD PLANS BOOK DATED 2010.

REVISED STANDARD PLAN RSP B3-1A

2010 REVISED STANDARD PLAN RSP B3-1A

DATE PLOTTED => 22-AUG-2016
TIME PLOTTED => 15:31

Dist	COUNTY	ROUTE	POST MILES TOTAL PROJECT	SHEET No.	TOTAL SHEETS
02	Sis	96	R52.5/88.4	94	208

REGISTERED CIVIL ENGINEER

October 30, 2015
PLANS APPROVAL DATE

REGISTERED PROFESSIONAL ENGINEER Efthymios Delis No. C51434 Exp. 6-30-17 CIVIL STATE OF CALIFORNIA

THE STATE OF CALIFORNIA OR ITS OFFICERS OR AGENTS SHALL NOT BE RESPONSIBLE FOR THE ACCURACY OR COMPLETENESS OF SCANNED COPIES OF THIS PLAN SHEET.

TO ACCOMPANY PLANS DATED 06-15-16

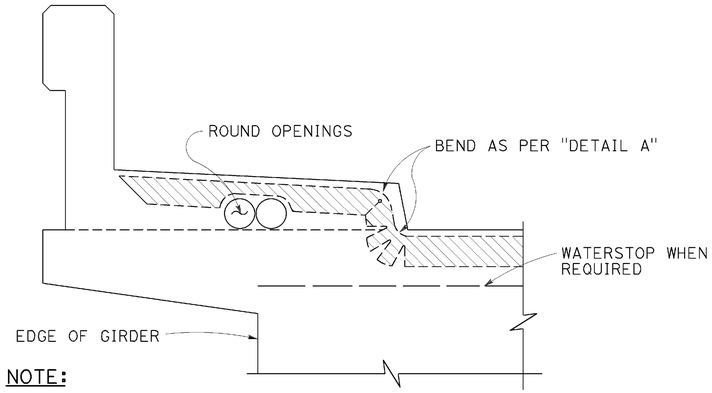

NOTE:
Type "B" seal shown. Type "A" seals to comform to the general path of seal shown, cuts for bending not required. Bend type "A" seals 3" up into curb or barrier rail on only the low end of the seal.

CONCRETE BARRIER AND SIDEWALK

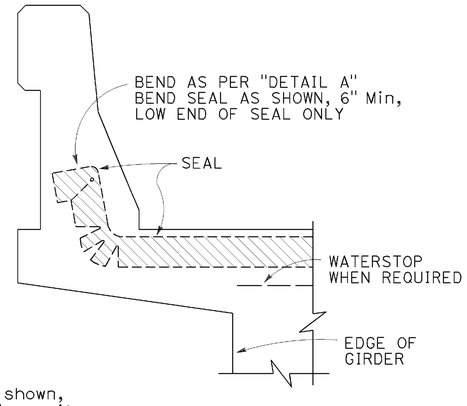

CONCRETE BARRIER

JOINT SEALS DETAILS

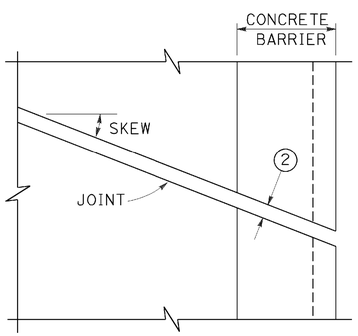

PLAN OF JOINT (SKEW ≤ 20°)

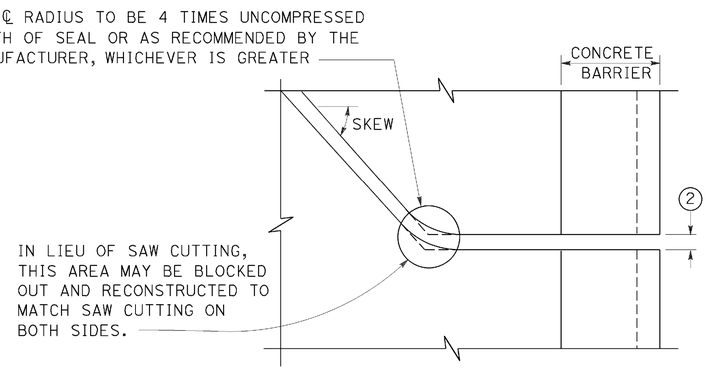

PLAN OF JOINT (SKEW > 20°)

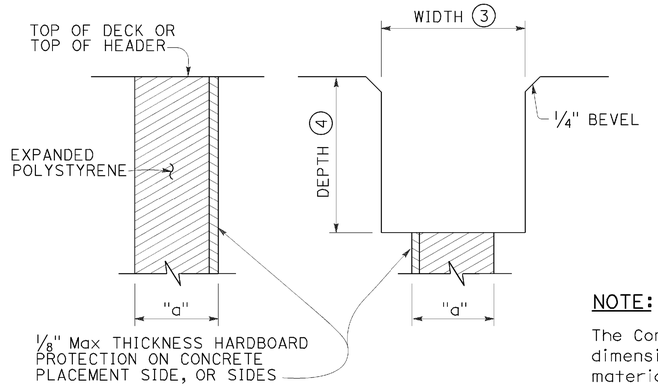

FORMING DETAIL SAWCUT DETAIL

NOTE:
The Contractor shall verify all controlling field dimensions before ordering or fabricatiing any material.

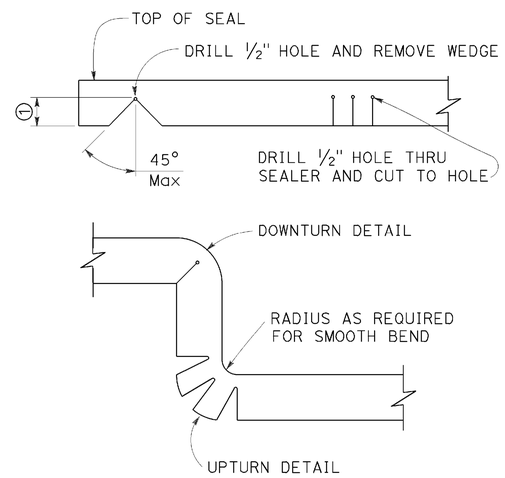

DETAIL A

NOTES:

1. Make smooth cuts from the bottom of seal to 1½" clear of top leaving at least one complete cell between the top of the cut and top of the seal. When necessary cut back of seal to clear conduit and round openings.
2. Opening in barrier to match width of sawn deck joint.
3. Sawcut groove widths shall be as ordered by the Engineer.
4. Depth of sawcut: Type A - Depth to be 2" minimum.
   Type B - Depth to be equal to or greater than the depth of seal measured along the contact surface, when compressed to minimum width position (W_2) plus dimensions shown.
5. MR (movement rating) as shown on other plan sheets.
6. Other depths must be approved by the Engineer.
7. A sidewalk joint shall be covered by an expansion joint armor.

DIMENSIONS "a" OF JOINT REQUIRED

MOVEMENT RATING (MR) 5	BRIDGE TYPE	"a" DIMENSION DECK CONCRETE PLACED		
		WINTER	FALL-SPRING	SUMMER
2"	ALL EXCEPT CIP/PS	1½"	1¼"	¾"
	CIP/PS	1¼"	1"	½"
1½"	ALL EXCEPT CIP/PS	1¼"	1"	½"
	CIP/PS	1"	¾"	½"
1"	ALL EXCEPT CIP/PS	1"	¾"	½"
	CIP/PS	¾"	½"	½"
½"	ALL EXCEPT CIP/PS	¾"	¾"	½"
	CIP/PS	½"	½"	½"

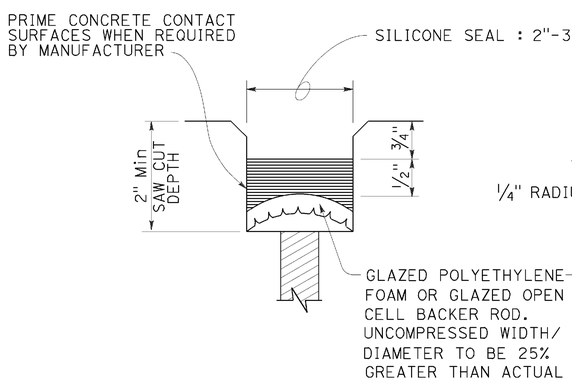

TYPE A SEAL
Movement rating : Silicone = 1" Max

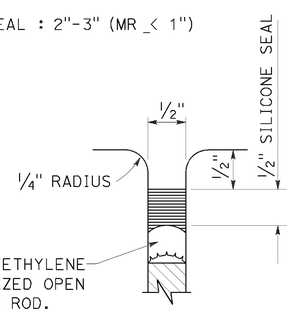

TYPE AL SEAL
Longitudinal joints only

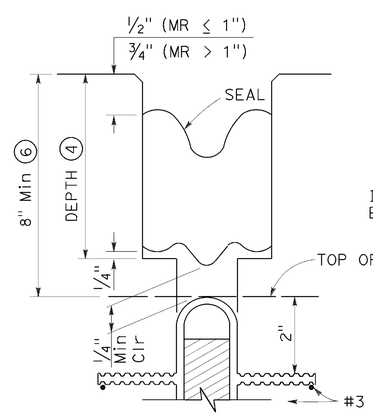

TYPE B JOINT SEAL
IN MINIMUM WIDTH POSITION (W_2)

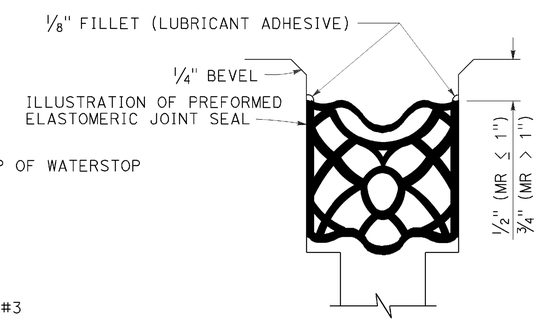

TYPE B SEAL
Movement Rating ≤ 2"

STATE OF CALIFORNIA
DEPARTMENT OF TRANSPORTATION

JOINT SEALS (MAXIMUM MOVEMENT RATING = 2")

NO SCALE

RSP B6-21 DATED OCTOBER 30, 2015 SUPERSEDES STANDARD PLAN B6-21 DATED MAY 20, 2011 - PAGE 283 OF THE STANDARD PLANS BOOK DATED 2010.

REVISED STANDARD PLAN RSP B6-21

2010 REVISED STANDARD PLAN RSP B6-21

DATE PLOTTED => 22-AUG-2016
TIME PLOTTED => 15:32

Dist	COUNTY	ROUTE	POST MILES TOTAL PROJECT	SHEET No.	TOTAL SHEETS
02	Sis	96	R52.5/88.4	95	208

REGISTERED CIVIL ENGINEER

July 19, 2013
PLANS APPROVAL DATE

REGISTERED PROFESSIONAL ENGINEER Marc Friedheim No. C57968 Exp. 6-30-14 CIVIL STATE OF CALIFORNIA

THE STATE OF CALIFORNIA OR ITS OFFICERS OR AGENTS SHALL NOT BE RESPONSIBLE FOR THE ACCURACY OR COMPLETENESS OF SCANNED COPIES OF THIS PLAN SHEET.

TO ACCOMPANY PLANS DATED 06-15-16

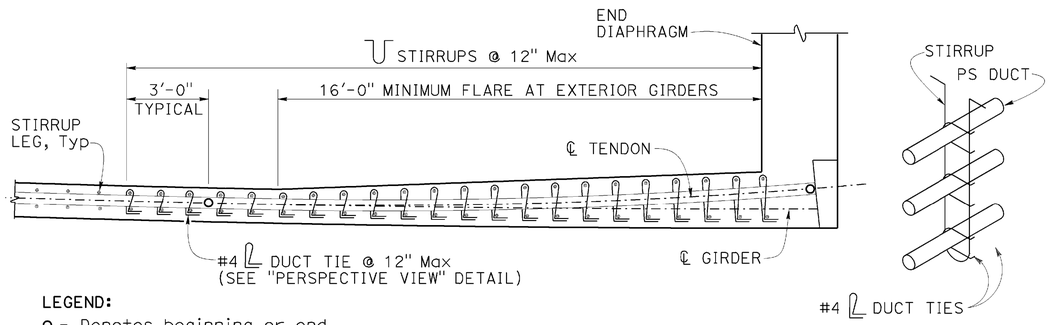

LEGEND:

o - Denotes beginning or end of tendon horizontal angle change (BC, EC or PCC)

PLAN

PERSPECTIVE VIEW

DUCT TIES AT TENDON HORIZONTAL ANGLE CHANGES
DETAIL 5-1

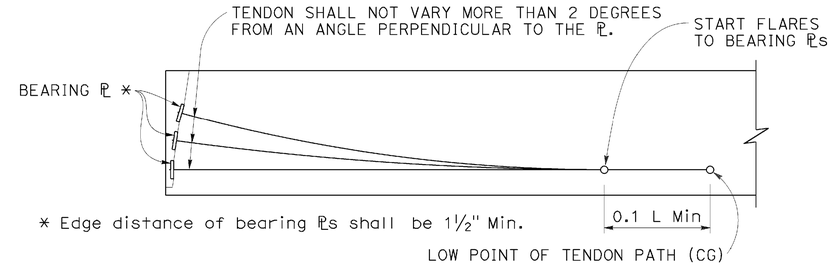

* Edge distance of bearing ℙs shall be 1½" Min.

ELEVATION - BEARING PLATE AND PRESTRESSING PATH
DETAIL 5-2

NOTES FOR DETAIL 5-1

1. Tendon horizontal angle change at end diaphragm shown. Duct tie placement similar for other locations where tendon horizontal angle changes occur. For curved girders place duct ties at tendon angle changes where ℄ tendon radius is smaller than ℄ girder radius.
2. Adjacent duct ties may be staggered to facilitate placement if stirrup spacing is less than 12 inches.
3. Place closed end of duct ties toward inside of tendon curve.
4. Wrap duct ties around both stirrup legs.
5. Individual duct ties may only be used to anchor one duct.

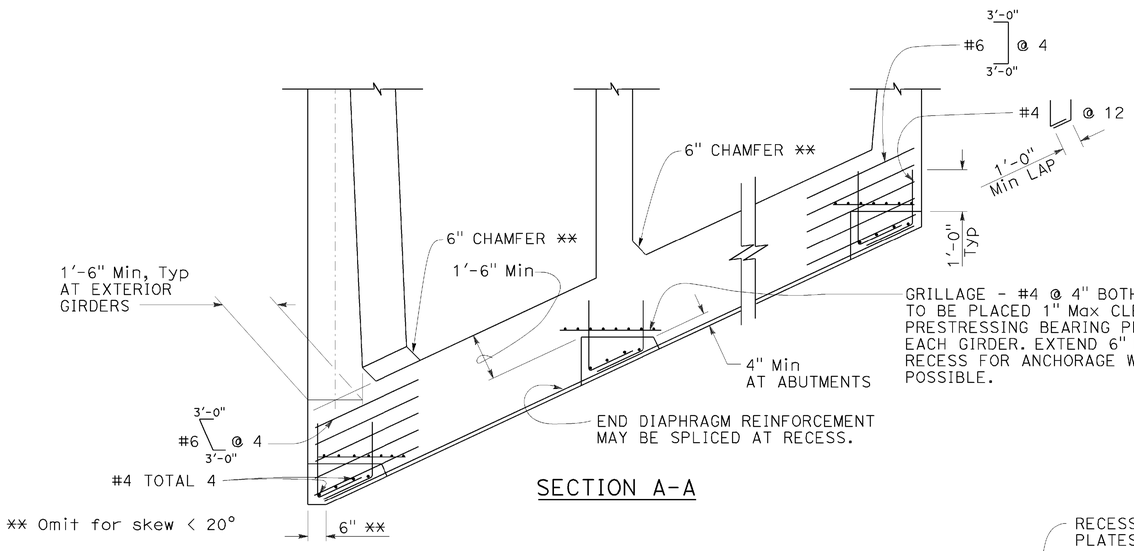

SECTION A-A

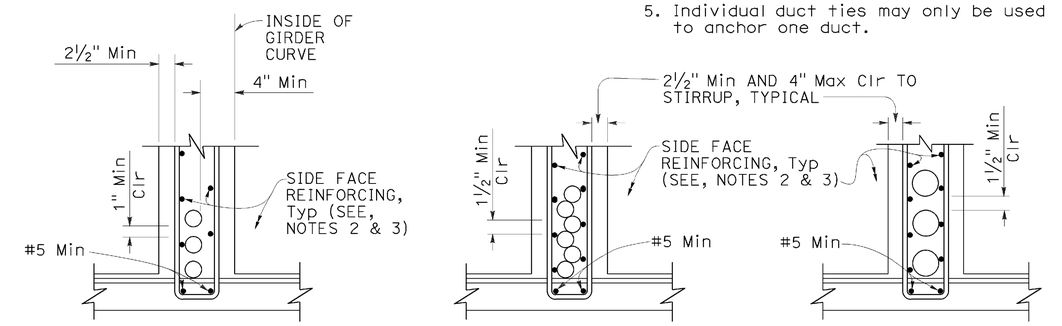

DUCTS 4½" OD AND LESS FOR HORIZONTAL CURVE RADIUS ≤ 2000'

DUCTS 4½" OD AND LESS

DUCTS OVER 4½" OD

CLEARANCE REQUIREMENTS FOR DUCTS
DETAIL 5-4

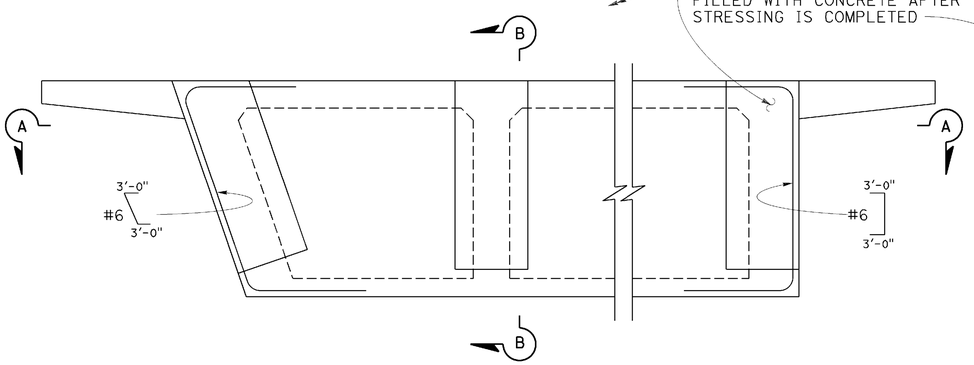

PRESTRESS ANCHORAGE DETAILS AT END DIAPHRAGMS
DETAIL 5-3

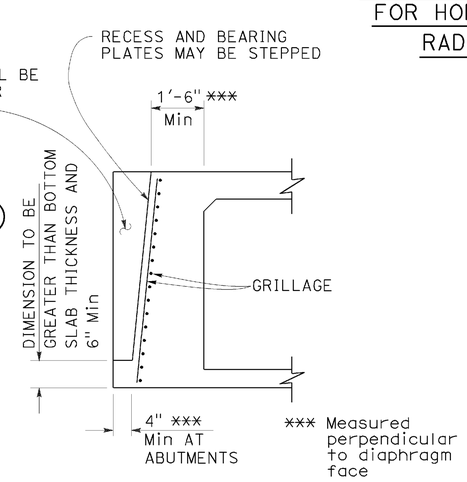

SECTION B-B

NOTES FOR DETAIL 5-4:

1. ⊔ Stirrups may also be used.
2. For additional details, see Standard Plan B7-1, and Project Plans.
3. Bar reinforcing which interferes with prestressing ducts may be adjusted as approved by the Engineer.

STATE OF CALIFORNIA
DEPARTMENT OF TRANSPORTATION

CAST-IN-PLACE POST-TENSIONED GIRDER DETAILS

NO SCALE

RSP B8-5 DATED JULY 19, 2013 SUPERSEDES STANDARD PLAN B8-5 DATED MAY 20, 2011 - PAGE 291 OF THE STANDARD PLANS BOOK DATED 2010.

REVISED STANDARD PLAN RSP B8-5

2010 REVISED STANDARD PLAN RSP B8-5

DATE PLOTTED => 22-AUG-2016
TIME PLOTTED => 15:32

Dist	COUNTY	ROUTE	POST MILES TOTAL PROJECT	SHEET No.	TOTAL SHEETS
02	Sis	96	R52.5/88.4	96	208

Theresa Gabriel
REGISTERED ELECTRICAL ENGINEER

October 30, 2015
PLANS APPROVAL DATE

REGISTERED PROFESSIONAL ENGINEER Theresa Aziz Gabriel No. E15129 Exp. 6-30-16 ELECTRICAL STATE OF CALIFORNIA

THE STATE OF CALIFORNIA OR ITS OFFICERS OR AGENTS SHALL NOT BE RESPONSIBLE FOR THE ACCURACY OR COMPLETENESS OF SCANNED COPIES OF THIS PLAN SHEET.

TO ACCOMPANY PLANS DATED 06-15-16

LEGEND:

- AB — ABANDON. IF APPLIED TO CONDUIT, REMOVE CONDUCTORS
- BC — INSTALL PULL BOX IN EXISTING CONDUIT RUN
- BP — PEDESTRIAN BARRICADE, TYPE AS INDICATED ON PLAN
- CB — INSTALL CONDUIT INTO EXISTING PULL BOX
- CC — CONNECT NEW AND EXISTING CONDUIT. REMOVE EXISTING CONDUCTORS AND INSTALL CONDUCTORS AS INDICATED
- CF — CONDUIT TO REMAIN FOR FUTURE USE. REMOVE CONDUCTORS. INSTALL PULL TAPE
- DH — DETECTOR HANDHOLE
- FA — FOUNDATION TO BE ABANDONED
- IS — INSTALL SIGN ON SIGNAL MAST ARM
- NS — NO SLIP BASE ON STANDARD
- PEC — PHOTOELECTRIC CONTROL
- PEU — PHOTOELECTRIC UNIT
- RC — EQUIPMENT OR MATERIAL TO BE REMOVED AND BECOME THE PROPERTY OF THE CONTRACTOR
- RE — REMOVE ELECTROLIER, FUSES AND BALLAST. TAPE ENDS OF CONDUCTORS
- RL — RELOCATE EQUIPMENT
- RR — REMOVE AND REUSE EQUIPMENT
- RS — REMOVE AND SALVAGE EQUIPMENT
- SC — SPLICE NEW TO EXISTING CONDUCTORS
- SD — SERVICE DISCONNECT
- TSP — TELEPHONE SERVICE POINT

ABBREVIATIONS

AC+	UNDERGROUNDED CONDUCTOR
APS	ACCESSIBLE PEDESTRIAN SIGNAL
Batt	BATTERY
BBS	BATTERY BACKUP SYSTEM
BC	BOLT CIRCLE
Blk	BLACK
BP	BYPASS
BPB	BICYCLE PUSH BUTTON
C	CONDUIT
CB	CIRCUIT BREAKER
CCTV	CLOSED CIRCUIT TELEVISION
Ckt	CIRCUIT
CMS	CHANGEABLE MESSAGE SIGN
Ctid	CALTRANS IDENTIFICATION
Comm	COMMUNICATION
Cntl	CONTROL
DF	DEPARTMENT-FURNISHED
DLC	LOOP DETECTOR LEAD-IN CABLE
EMS	EXTINGUISHABLE MESSAGE SIGN
EVUC	EMERGENCY VEHICLE UNIT CABLE
EVUD	EMERGENCY VEHICLE UNIT DETECTOR
FB	FLASHING BEACON
FBCA	FLASHING BEACON CONTROL ASSEMBLY
FBS	FLASHING BEACON WITH SLIP BASE
FO	FIBER OPTIC
G	EQUIPMENT GROUNDING CONDUCTOR
GB	GROUND BUS
GFCI	GROUND FAULT CIRCUIT INTERRUPTER
Grn	GREEN
HAR	HIGHWAY ADVISORY RADIO
Hex	HEXAGONAL
HPS	HIGH PRESSURE SODIUM
IISNS	INTERNALLY ILLUMINATED STREET NAME SIGN
ISL	INDUCTION SIGN LIGHTING
LED	LIGHT EMITTING DIODE
LMA	LUMINAIRE MAST ARM
LPS	LOW PRESSURE SODIUM
Ltg	LIGHTING
Lum	LUMINAIRE
M	METERED
MAT	MAST ARM MOUNTING TOP ATTACHMENT
MAS	MAST ARM MOUNTING SIDE ATTACHMENT
MBPS	MANUAL BYPASS SWITCH
M/M	MULTIPLE TO MULTIPLE TRANSFORMER
Mtg	MOUNTING
MV	MERCURY VAPOR LIGHTING FIXTURE
MVDS	MICROWAVE VEHICLE DETECTION SYSTEM
N	NEUTRAL (GROUNDED CONDUCTOR)
NB	NEUTRAL BUS
NC	NORMALLY CLOSE
NO	NORMALLY OPEN
P	CIRCUIT BREAKER'S POLE
PB	PULL BOX
PBA	PUSH BUTTON ASSEMBLY
PEC	PHOTOELECTRIC CONTROL
Ped	PEDESTRIAN
PEU	PHOTOELECTRIC UNIT
PT	CONDUIT WITH PULL TAPE
PTR	POWER TRANSFER RELAY
RE	RELOCATED EQUIPMENT
RM	RAMP METERING
RWIS	ROADSIDE WEATHER INFORMATION SYSTEM
SB	SLIP BASE
SIC	SIGNAL INTERCONNECT CABLE
Sig	SIGNAL
SMA	SIGNAL MAST ARM
SNS	STREET NAME SIGN
SP	SERVICE POINT
TB	TERMINAL BOARD
TDC	TELEPHONE DEMARCATION CABINET
Temp	TEMPERATURE
TMS	TRAFFIC MONITORING STATION
TOS	TRAFFIC OPERATIONS SYSTEM
UPS	UNINTERRUPTABLE POWER SUPPLY
UPSC	UNINTERRUPTABLE POWER SUPPLY CONTROLLER
Veh	VEHICLE
VIVDS	VIDEO IMAGE VEHICLE DETECTION SYSTEM
Wht	WHITE
WIM	WEIGH-IN-MOTION
Xfmr	TRANSFORMER

SOFFIT AND WALL-MOUNTED LUMINAIRES

- PENDANT SOFFIT LUMINAIRE, 70 W HPS UNLESS OTHERWISE SPECIFIED
- FLUSH-MOUNTED SOFFIT LUMINAIRE, 70 W HPS UNLESS OTHERWISE SPECIFIED
- WALL-MOUNTED LUMINAIRE, 70 W HPS UNLESS OTHERWISE SPECIFIED
- EXISTING SOFFIT OR WALL-MOUNTED LUMINAIRE TO REMAIN UNMODIFIED
- (M) EXISTING SOFFIT OR WALL-MOUNTED LUMINAIRE TO BE MODIFIED AS SPECIFIED

NOTE:
Arrow indicates "street side" of luminaire.

COMMONLY USED SYMBOLS FOR UNITED STATES CUSTOMARY UNITS OF MEASUREMENT:

SYMBOL	DEFINITIONS
Ω	OHMS
min	MINUTE
s	SECOND
bps	BITS PER SECOND
Bps	BYTES PER SECOND
A	AMPERE
V	VOLT
V(dc)	VOLT (DIRECT CURRENT)
V(ac)	VOLT (ALTERNATING CURRENT)
FC	FOOT - CANDLE
W	WATTS
VA	VOLT-AMPERE
M	MEGA
k	KILO
m	MILLI
μ	MICRO
P	PICO
Hz	HERTZ

MISCELLANEOUS ELECTROLIERS

NEW	EXISTING	
		LUMINAIRE ON WOOD POLE
		NON-STANDARD ELECTROLIER (SEE PROJECT LEGEND)
		CITY ELECTROLIER
		ELECTROLIER FOUNDATION (FUTURE INSTALLATION)

NOTES:

1. LED luminaires shall be 235 W when installed on Type 21, 21D, 30, 31 and 32 Standards, unless otherwise specified. LED luminaires shall be 165 W when installed on other type standards or poles, unless otherwise specified.
2. Luminaires shall be the cutoff type, ANSI Type Ⅲ medium cutoff lighting distribution, unless otherwise specified.

STANDARD ELECTROLIER

NEW	EXISTING	STANDARD TYPE
		15
		15D
		15 STRUCTURE
		15D STRUCTURE
		21
		21D
		21 STRUCTURE
		21D STRUCTURE
		30
		31
		32

STATE OF CALIFORNIA
DEPARTMENT OF TRANSPORTATION

ELECTRICAL SYSTEMS (LEGEND AND ABBREVIATIONS)

NO SCALE

RSP ES-1A DATED OCTOBER 30, 2015 SUPERSEDES RSP ES-1A DATED JULY 19, 2013 AND STANDARD PLAN ES-1A DATED MAY 20, 2011 - PAGE 425 OF THE STANDARD PLANS BOOK DATED 2010.

REVISED STANDARD PLAN RSP ES-1A

2010 REVISED STANDARD PLAN RSP ES-1A

DATE PLOTTED => 22-AUG-2016
TIME PLOTTED => 15:32

Dist	COUNTY	ROUTE	POST MILES TOTAL PROJECT	SHEET No.	TOTAL SHEETS
02	Sis	96	R52.5/88.4	97	208

Theresa Gabriel
REGISTERED ELECTRICAL ENGINEER

October 30, 2015
PLANS APPROVAL DATE

REGISTERED PROFESSIONAL ENGINEER Theresa Aziz Gabriel No. E15129 Exp. 6-30-16 ELECTRICAL STATE OF CALIFORNIA

THE STATE OF CALIFORNIA OR ITS OFFICERS OR AGENTS SHALL NOT BE RESPONSIBLE FOR THE ACCURACY OR COMPLETENESS OF SCANNED COPIES OF THIS PLAN SHEET.

TO ACCOMPANY PLANS DATED 06-15-16

CONDUIT

NEW	EXISTING	
		LIGHTING CONDUIT, UNLESS OTHERWISE INDICATED OR NOTED
		TRAFFIC SIGNAL CONDUIT
C	c	COMMUNICATION CONDUIT
T	t	TELEPHONE CONDUIT
F	f	FIRE ALARM CONDUIT
FO	fo	FIBER OPTIC CONDUIT
		CONDUIT TERMINATION
R	r	CONDUIT RISER ATTACHED TO THE STRUCTURE OR SERVICE POLE

SERVICE EQUIPMENT

NEW	EXISTING	
OH	oh	OVERHEAD LINES
U	U	WOOD POLE, "U" INDICATES UTILITY OWNED
		POLE GUY WITH ANCHOR
		UTILITY TRANSFORMER - GROUND MOUNTED
III	III	SERVICE EQUIPMENT ENCLOSURE TYPE. DOOR INDICATES FRONT OF ENCLOSURE
T	t	TELEPHONE DEMARCATION CABINET

POLE-MOUNTED SERVICE DESIGNATION

TYPE H SERVICE, 28'-10" — TYPE OF INSTALLATION AND POLE HEIGHT ABOVE GRADE

FLASHING BEACON

NEW	EXISTING	
R	R	FLASHING BEACON (ONE VEHICLE SIGNAL HEAD WITH BACKPLATE AND VISOR) "R" INDICATES RED INDICATION, "Y" INDICATES YELLOW INDICATION
Y Y	Y Y	FLASHING BEACON WITH TYPE 15-FBS STANDARD AND A SIGN.
R R	R R	FLASHING BEACON WITH TYPES 9, 9A OR 9B SIGN UNLESS OTHERWISE SPECIFIED OR INDICATED

SIGNAL EQUIPMENT

NEW	EXISTING	
		PEDESTRIAN SIGNAL HEAD
		PUSH BUTTON ASSEMBLY POST
		PEDESTRIAN BARRICADE
		VEHICLE SIGNAL HEAD (WITH BACKPLATE AND 3-SECTIONS: RED, YELLOW AND GREEN)
		VEHICLE SIGNAL HEAD WITH ANGLE VISOR
PV	PV	MODIFICATIONS OF BASIC SYMBOL: "L" INDICATES ALL NON-ARROW SECTIONS LOUVERED "LG" INDICATES LOUVERED GREEN SECTION ONLY "PV" INDICATES ALL 12" SECTIONS PROGRAMMED VISIBILITY "8" INDICATES ALL 8" SECTIONS (ONLY WHEN SPECIFIED)
		VEHICLE SIGNAL HEAD CONSISTING OF RED, YELLOW AND GREEN LEFT ARROW SECTIONS
		VEHICLE SIGNAL HEAD CONSISTING OF RED AND YELLOW SECTIONS WITH AN UP GREEN ARROW SECTION
		VEHICLE SIGNAL HEAD (5 SECTION) CONSISTING OF RED, YELLOW AND GREEN SECTIONS WITH YELLOW AND GREEN RIGHT ARROW SECTIONS
		TYPE 15TS STANDARD WITH VEHICLE SIGNAL HEAD AND LUMINAIRE
		TYPE 21TS STANDARD WITH VEHICLE SIGNAL HEAD AND LUMINAIRE
		STANDARD WITH LUMINAIRE AND SIGNAL MAST ARMS AND ATTACHED VEHICLE SIGNAL HEADS
		TYPE 1 STANDARD WITH ATTACHED VEHICLE SIGNAL HEADS
		STANDARD WITH A SIGNAL MAST ARM, ATTACHED VEHICLE SIGNAL HEADS AND INTERNALLY ILLUMINATED STREET NAME SIGN
		CONTROLLER ASSEMBLY. DOOR INDICATES FRONT OF CABINET

SIGNAL EQUIPMENT Cont

NEW	EXISTING	
		GUARD POST
		TYPE 1 STANDARD WITH RAMP METERING SIGN
		OPTICAL DETECTOR FOR THE EMERGENCY VEHICLE DETECTION

NOTES:

1. All signal sections shall be 12" unless shown otherwise.
2. Signal heads shall be provided with backplates unless shown otherwise.

ILLUMINATED OVERHEAD SIGN

NEW	EXISTING	
		SINGLE POST, SINGLE ILLUMINATED SIGN, BALANCED BUTTERFLY
		SINGLE POST, DOUBLE ILLUMINATED SIGN, BALANCED BUTTERFLY
		SINGLE POST, SINGLE ILLUMINATED SIGN, FULL CANTILEVER
		DOUBLE POST, SINGLE ILLUMINATED SIGN
		SINGLE ILLUMINATED SIGN MOUNTED ON STRUCTURE
		DOUBLE POST, SINGLE ILLUMINATED SIGN WITH ELECTROLIER

STATE OF CALIFORNIA
DEPARTMENT OF TRANSPORTATION

ELECTRICAL SYSTEMS (LEGEND AND ABBREVIATIONS)

NO SCALE

RSP ES-1B DATED OCTOBER 30, 2015 SUPERSEDES RSP ES-1B DATED JULY 19, 2013 AND STANDARD PLAN ES-1B DATED MAY 20, 2011 - PAGE 426 OF THE STANDARD PLANS BOOK DATED 2010.

REVISED STANDARD PLAN RSP ES-1B

2010 REVISED STANDARD PLAN RSP ES-1B

DATE PLOTTED => 22-AUG-2016
TIME PLOTTED => 15:33

Dist	COUNTY	ROUTE	POST MILES TOTAL PROJECT	SHEET No.	TOTAL SHEETS
02	Sis	96	R52.5/88.4	98	208

Theresa Gabriel
REGISTERED ELECTRICAL ENGINEER

April 15, 2016
PLANS APPROVAL DATE

REGISTERED PROFESSIONAL ENGINEER Theresa Aziz Gabriel No. E15129 Exp. 6-30-16 ELECTRICAL STATE OF CALIFORNIA

THE STATE OF CALIFORNIA OR ITS OFFICERS OR AGENTS SHALL NOT BE RESPONSIBLE FOR THE ACCURACY OR COMPLETENESS OF SCANNED COPIES OF THIS PLAN SHEET.

TO ACCOMPANY PLANS DATED 06-15-16

2010 REVISED STANDARD PLAN RSP ES-1C

EQUIPMENT IDENTIFICATION

ILLUMINATED SIGN IDENTIFICATION:

SIGN No. 12345 — SIGN EQUIPMENT IDENTIFICATION CHARACTERS - PLACE ON POST OR STRUCTURE

10 ISL SCI 1.0

- 1.0 — TRANSFORMER RATING (kVA)
- SCI — LIGHTING CONTROL TYPE
- ISL — NUMBER AND TYPE OF FIXTURES

} DO NOT PLACE ON STANDARD OR STRUCTURE

ELECTROLIER OR EQUIPMENT IDENTIFICATION:

L2745 - 15'-0"

- 15'-0" — MAST ARM LENGTH, IF SHOWN. DO NOT PLACE ON STANDARD OR STRUCTURE
- L2745 — EQUIPMENT IDENTIFICATION CHARACTERS - PLACE ON STANDARD OR STRUCTURE. EXISTING EQUIPMENT IDENTIFICATION CHARACTERS ARE SHOWN IN PARENTHESIS

CONDUIT AND CONDUCTOR IDENTIFICATION:

1½"C, 2#10, 15#14, 2 DLC, 12P#18 (PAIR)

- 2#10, 15#14, 2 DLC, 12P#18 — NUMBER AND SIZE OF CONDUCTORS AND CABLES
- 1½"C — SIZE OF CONDUIT IN INCHES

ø1, ø2, ø2P, etc.	TRAFFIC PHASE IDENTIFICATION FOR SIGNALS, DETECTORS AND PHASE DIAGRAMS
1 2 3	LEGEND NUMBERS
A B C	EQUIPMENT, SIGNAL POLES, INSTALLATION OR ITEMS
1 2 3	CONDUIT RUN NUMBERS

SIGNAL AND LIGHTING STANDARD (TYPICAL DESIGNATION):

19A - 3 - 100

- 100 — WIND VELOCITY = 100 mph
- 3 — CASE 3 ARM LOADING
- 19A — STANDARD TYPE
- STANDARD PLAN SHEET NUMBER
- DETAIL, NUMBER, SECTION, TYPE OR ELEVATION

MISCELLANEOUS EQUIPMENT

NEW	EXISTING	
CMS	cms	CHANGEABLE MESSAGE SIGN
		CLOSED CIRCUIT TELEVISION CAMERA
		HIGHWAY ADVISORY RADIO POLE AND ANTENNA
EMS	ems	LED EXTINGUISHABLE MESSAGE SIGN
M V	m v	DETECTION DEVICE M = MICROWAVE SENSOR V = VIDEO IMAGE SENSOR

WIRING DIAGRAM LEGEND

- EXTERNAL CONDUCTOR
- CONDUCTOR OR BUS
- TIE POINT
- CONTACTOR COIL
- CONTACTOR, NO CONTACT
- TERMINAL BLOCKS
- CONTACTOR, NC CONTACT
- ENCLOSURE BOND
- GROUNDING ELECTRODE
- CIRCUIT BREAKER
- RECEPTACLE

PULL BOXES

NEW	EXISTING	
		PULL BOX, No. 5 UNLESS OTHERWISE INDICATED OR NOTED
3	9A(21)	PULL BOX, ADDITIONAL DESIGNATIONS OR DESCRIPTIONS

3 No. 3½ PULL BOX
5 No. 5 PULL BOX
6 No. 6 PULL BOX
7 No. 7 PULL BOX (CEILING)
8 No. 8 PULL BOX
9 No. 9 PULL BOX (STRUCTURE)
9A No. 9A PULL BOX (STRUCTURE)

(C) COMMUNICATIONS PULL BOX
(E) PULL BOX WITH EXTENSION
(S) SPRINKLER CONTROL PULL BOX
(21) ANCHOR BOLTS AND CONDUIT FOR FUTURE INSTALLATION OF TYPE 21 STANDARD
(T) TRAFFIC PULL BOX

VEHICLE DETECTORS

5 J 9 U

- U = UPPER
  L = LOWER
- SLOT NUMBER IN INPUT FILE
- INPUT FILE (I OR J)
- PHASE

NEW	EXISTING	
		TYPE A LOOP DETECTOR. OUTLINE OF SAW CUT SHOWN
		TYPE B LOOP DETECTOR. OUTLINE OF SAW CUT SHOWN
		TYPE C LOOP DETECTOR. OUTLINE OF SAW CUT SHOWN
		TYPE D LOOP DETECTOR. OUTLINE OF SAW CUT SHOWN
		TYPE E LOOP DETECTOR. OUTLINE OF SAW CUT SHOWN
		TYPE Q LOOP DETECTOR. OUTLINE OF SAW CUT SHOWN
DH	dh	DETECTOR HANDHOLE
		MICROWAVE OR VIDEO DETECTION ZONE

STATE OF CALIFORNIA
DEPARTMENT OF TRANSPORTATION

ELECTRICAL SYSTEMS (LEGEND AND ABBREVIATIONS)

NO SCALE

RSP ES-1C DATED APRIL 15, 2016 SUPERSEDES RSP ES-1C DATED OCTOBER 30, 2015 AND RSP ES-1C DATED JULY 19, 2013 AND STANDARD PLAN ES-1C DATED MAY 20, 2011 - PAGE 427 OF THE STANDARD PLANS BOOK DATED 2010.

REVISED STANDARD PLAN RSP ES-1C

DATE PLOTTED => 22-AUG-2016
TIME PLOTTED => 15:33

Dist	COUNTY	ROUTE	POST MILES TOTAL PROJECT	SHEET No.	TOTAL SHEETS
02	Sis	96	R52.5/88.4	99	208

Theresa Gabriel
REGISTERED ELECTRICAL ENGINEER

October 30, 2015
PLANS APPROVAL DATE

REGISTERED PROFESSIONAL ENGINEER Theresa Aziz Gabriel No. E15129 Exp. 6-30-16 ELECTRICAL STATE OF CALIFORNIA

THE STATE OF CALIFORNIA OR ITS OFFICERS OR AGENTS SHALL NOT BE RESPONSIBLE FOR THE ACCURACY OR COMPLETENESS OF SCANNED COPIES OF THIS PLAN SHEET.

TO ACCOMPANY PLANS DATED 06-15-16

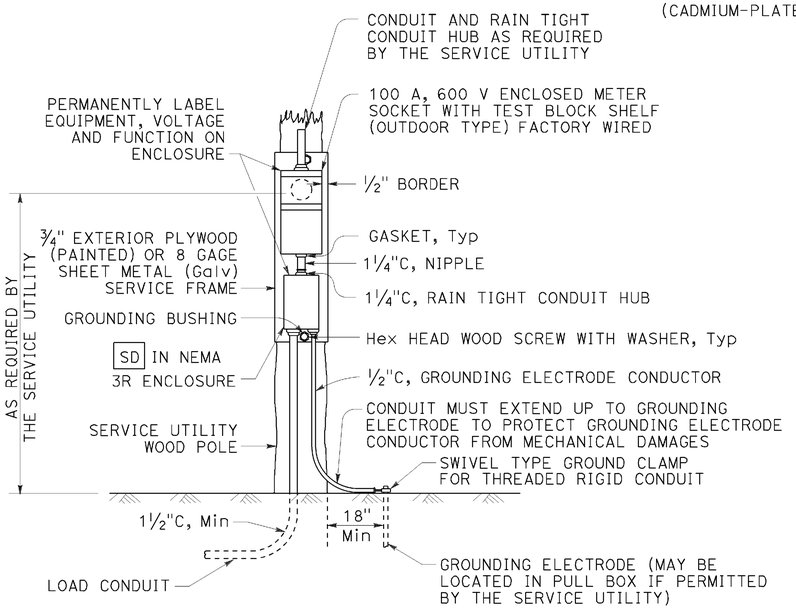

TYPE SCE-1
DETAIL A

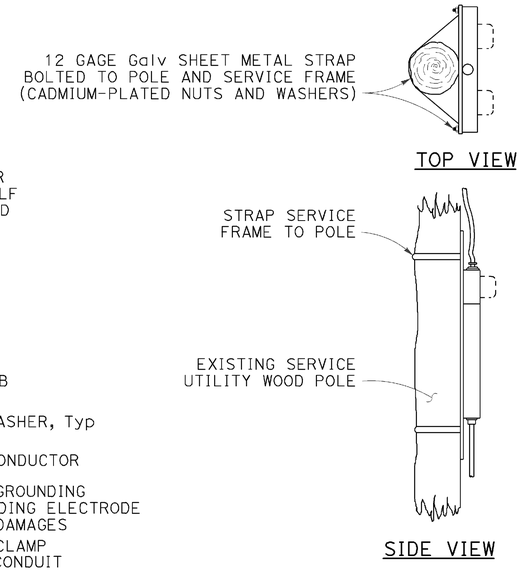

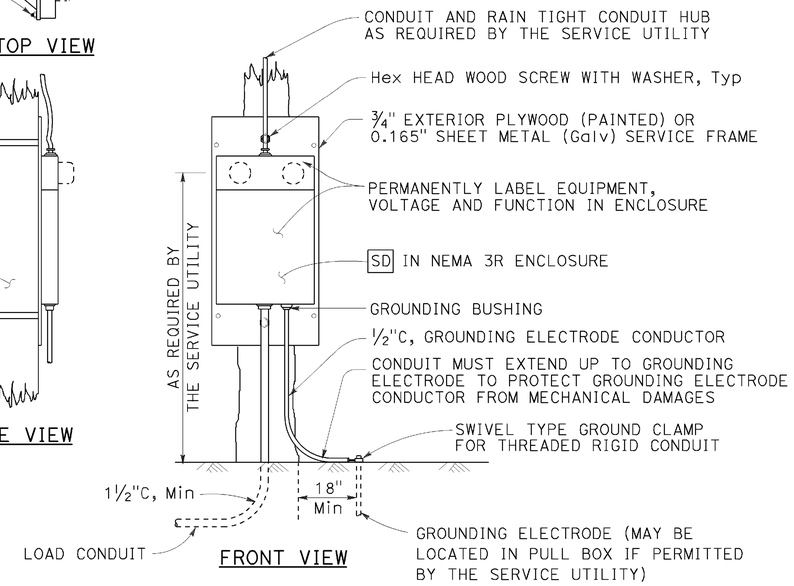

TYPE SCE-2
DETAIL B

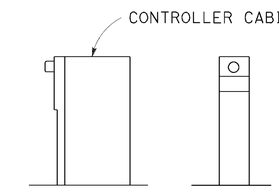

TYPE OF SERVICE (TYPICAL)
DETAIL C

See Notes 1 and 2

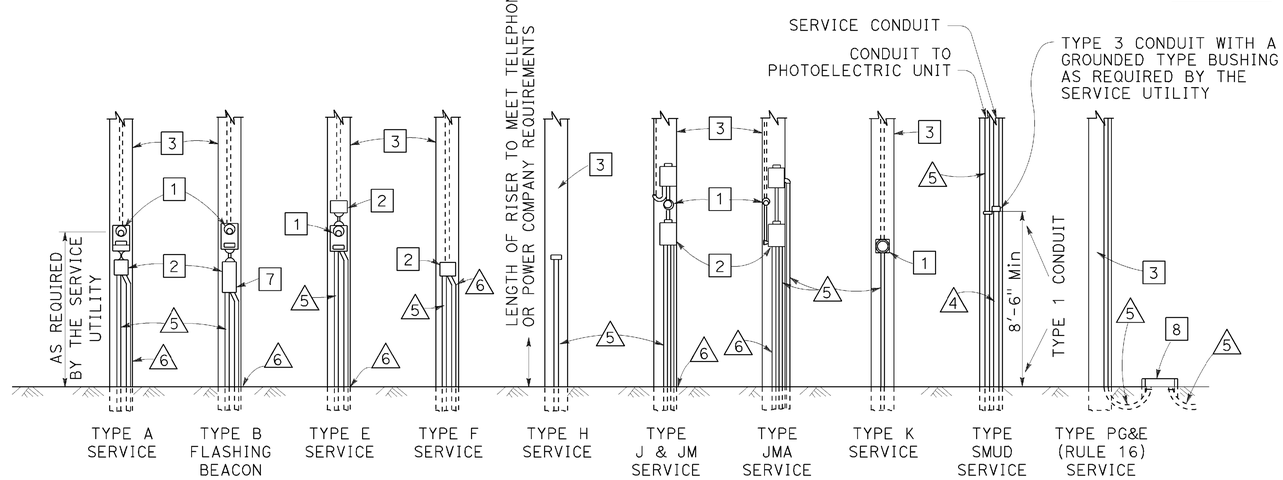

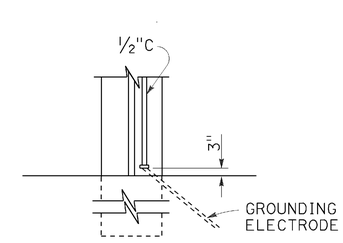

TYPE A
See Note 3

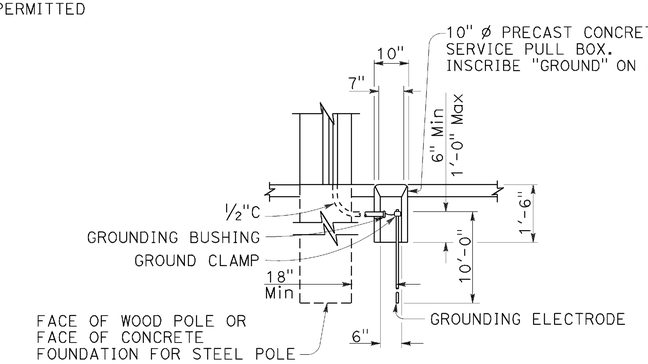

TYPE B
See Note 4

SERVICE GROUNDING
DETAIL E

LEGEND:

1. METER SOCKET.
2. SERVICE ENCLOSURE WITH A MINIMUM 60 A RATED MAIN CIRCUIT BREAKER, UNLESS OTHERWISE SHOWN.
3. A. UTILITY OWNED POLE. THE SERVICE UTILITY WILL FURNISH AND INSTALL REQUIRED SERVICE RISER, PEU WITH CONDUCTORS AND OTHER EQUIPMENT AS NEEDED.
   B. STATE OWNED POLE. THE CONTRACTOR SHALL FURNISH AND INSTALL REQUIRED SERVICE RISER AND EQUIPMENT.
4. 2"C, SERVICE CONDUIT MUST HAVE A GROUNDED TYPE BUSHING INSTALLED AT UPPER END OF THE METALLIC POLE RISER CONDUIT. A GROUNDING CONDUCTOR MUST BE ATTACHED TO THE BUSHING, CARRIED THROUGH THE CONDUIT RUN AND ATTACHED TO THE SERVICE EQUIPMENT ENCLOSURE'S GROUNDING ELECTRODE.
5. CONDUIT, LENGTH AND SIZE AS REQUIRED.
6. ½"C, 1#6. SEE DETAIL E.
7. FLASHING BEACON CONTROL ASSEMBLY.
8. SERVICE PULL BOX, No. 5 UNLESS OTHERWISE NOTED, FURNISHED AND INSTALLED BY THE CONTRACTOR. SERVICE UTILITY SHALL DETERMINE THE EXACT LOCATION.

POLE MOUNTED SERVICE INSTALLATIONS
DETAIL D

NOTES:

1. Type II service equipment enclosure mounted on the side of a controller cabinet.
2. Type III complete free-standing service equipment enclosure.
3. Ground clamp and required fittings must be accessible. Conduit must extend to protect grounding electrode conductor from mechanical damage.
4. Use where service utility requires 18" clearance between grounding electrode and the pole or service equipment enclosure. Installation shown is for sidewalk or paved areas. In unpaved areas, omit special service pull box and locate ground clamp above ground or locate ground clamp in nearest pull box.

STATE OF CALIFORNIA
DEPARTMENT OF TRANSPORTATION

ELECTRICAL SYSTEMS (SERVICE EQUIPMENT)

NO SCALE

RSP ES-2A DATED OCTOBER 30, 2015 SUPERSEDES STANDARD PLAN ES-2A DATED MAY 20, 2011 - PAGE 428 OF THE STANDARD PLANS BOOK DATED 2010.

REVISED STANDARD PLAN RSP ES-2A

2010 REVISED STANDARD PLAN RSP ES-2A

DATE PLOTTED => 22-AUG-2016
TIME PLOTTED => 15:34

Dist	COUNTY	ROUTE	POST MILES TOTAL PROJECT	SHEET No.	TOTAL SHEETS
02	Sis	96	R52.5/88.4	100	208

Theresa Gabriel
REGISTERED ELECTRICAL ENGINEER

April 15, 2016
PLANS APPROVAL DATE

REGISTERED PROFESSIONAL ENGINEER Theresa Aziz Gabriel No. E15129 Exp. 6-30-16 ELECTRICAL STATE OF CALIFORNIA

THE STATE OF CALIFORNIA OR ITS OFFICERS OR AGENTS SHALL NOT BE RESPONSIBLE FOR THE ACCURACY OR COMPLETENESS OF SCANNED COPIES OF THIS PLAN SHEET.

TO ACCOMPANY PLANS DATED 06-15-16

2010 REVISED STANDARD PLAN RSP ES-3C

NOTES:

1. Controller units, plug-mounted equipment, shelf-mounted equipment and wall-mounted equipment shall be located to permit safe and easy removal or replacement without removing any other piece of equipment.
2. Cabinet fan may be installed at an alternate location near the top of the cabinet when approved by the Engineer.
3. Where telephone interconnect is required, a minimum of 5" clear vertical space shall be provided inside the cabinet for the equipment.
4. Telephone interconnect conductors shall be enclosed in a ¾"C or larger conduit through the foundation. Type 4 conduit shall be used to separate telephone and power conductors in cabinets.

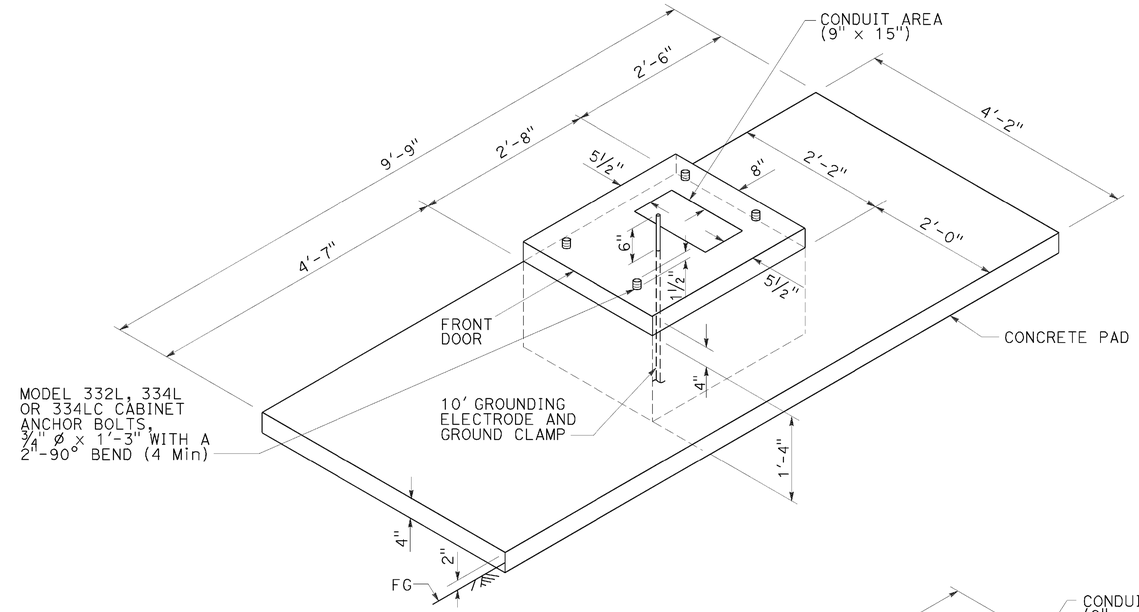

FOUNDATION AND PAD DETAIL

Model 332L, 334L and 334LC

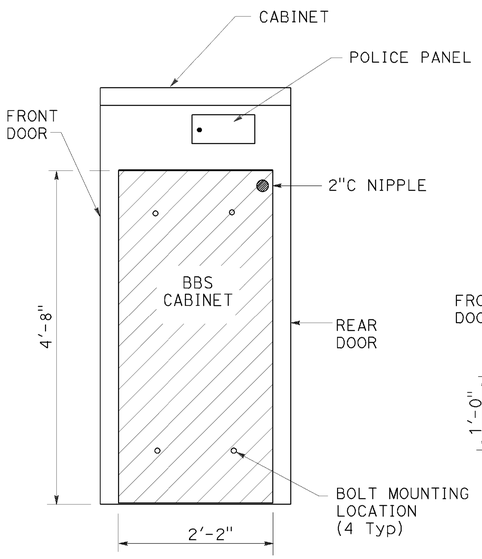

SIDE VIEW

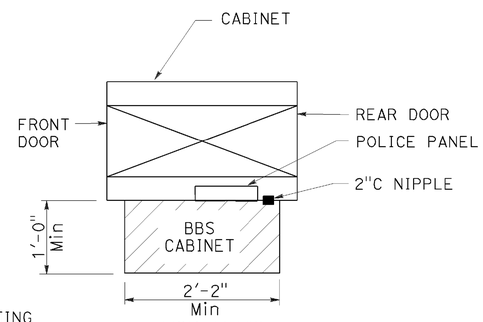

TOP VIEW

BBS CABINET MOUNTED TO THE MODEL 332L CABINET

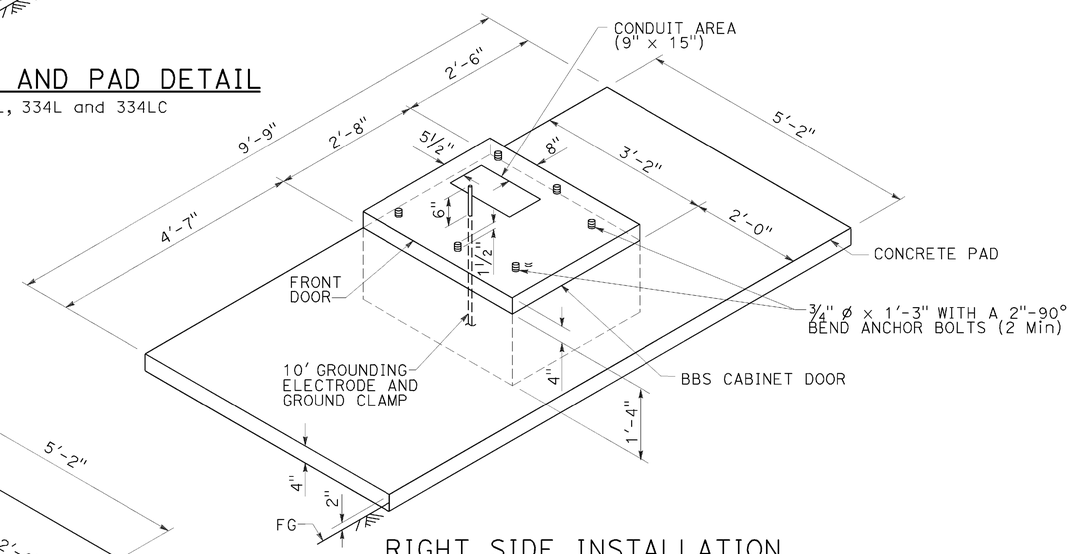

RIGHT SIDE INSTALLATION

DETAIL B

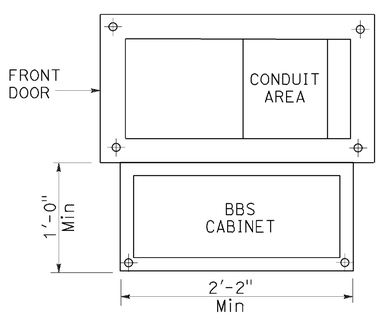

BASE PLAN FOR BBS MOUNTED TO THE MODEL 332L CABINET

(FOR DIMENSIONS AND DETAILS NOT SHOWN, SEE CABINET HOUSING DETAILS OF THE TRANSPORTATION ELECTRICAL EQUIPMENT SPECIFICATION (TEES))

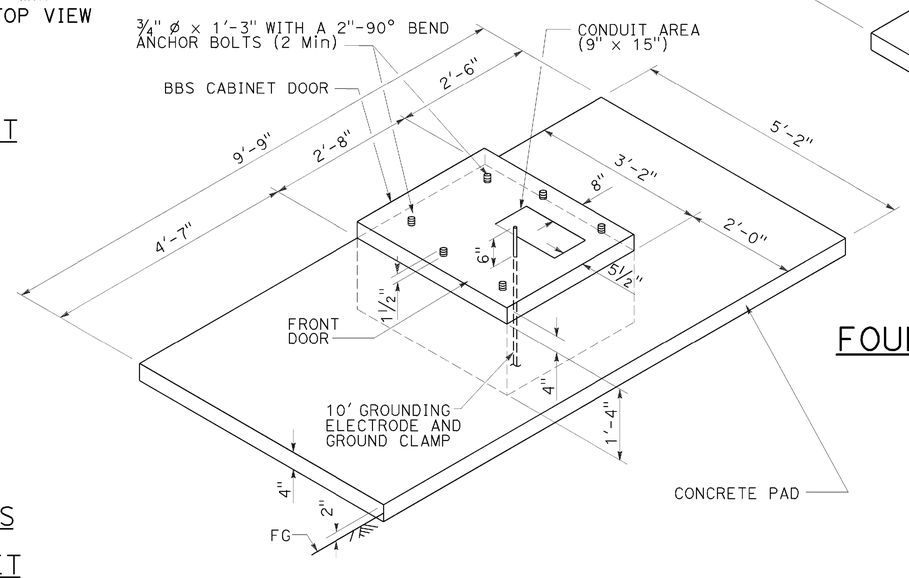

LEFT SIDE INSTALLATION

DETAIL A

MODIFIED MODEL 332L CABINET FOUNDATION DETAIL FOR BATTERY BACKUP SYSTEM

STATE OF CALIFORNIA
DEPARTMENT OF TRANSPORTATION

ELECTRICAL SYSTEMS (CONTROLLER CABINET FOUNDATION AND PAD DETAILS)

NO SCALE

RSP ES-3C DATED APRIL 15, 2016 SUPERSEDES RSP ES-3C DATED OCTOBER 30, 2015 AND STANDARD PLAN ES-3C DATED MAY 20, 2011 - PAGE 437 OF THE STANDARD PLANS BOOK DATED 2010.

REVISED STANDARD PLAN RSP ES-3C

DATE PLOTTED => 22-AUG-2016
TIME PLOTTED => 15:34