Dist	COUNTY	ROUTE	POST MILES TOTAL PROJECT	SHEET No.	TOTAL SHEETS
02	Sis	5	R57.8/R58.5	1	106

STATE OF CALIFORNIA

DEPARTMENT OF TRANSPORTATION

PROJECT PLANS FOR CONSTRUCTION ON

STATE HIGHWAY

IN SISKIYOU COUNTY NEAR HORNBROOK FROM 0.3 MILE SOUTH OF KLAMATH RIVER ROAD UNDERCROSSING TO 0.5 MILE NORTH OF KLAMATH RIVER ROAD UNDERCROSSING

TO BE SUPPLEMENTED BY STANDARD PLANS DATED 2010

INDEX OF PLANS

SHEET No.	DESCRIPTION
1	TITLE AND LOCATION MAP
2	TYPICAL CROSS SECTIONS
3-7	LAYOUTS
8-12	CONSTRUCTION DETAILS
13	UTILITY PLANS
14	CONSTRUCTION AREA SIGNS
15-32	STAGE CONSTRUCTION PLANS
33	TRAFFIC HANDLING DETAILS
34	DETOUR PLAN
35-44	PAVEMENT DELINEATION PLANS
45	SUMMARY OF QUANTITIES
46-48	ELECTRICAL PLANS
49-88	REVISED STANDARD PLANS

STRUCTURES

89-106	STRUCTURE PLANS

THE STANDARD PLANS LIST APPLICABLE TO THIS CONTRACT IS INCLUDED IN THE NOTICE TO BIDDERS AND SPECIAL PROVISIONS BOOK.

LOCATION MAP

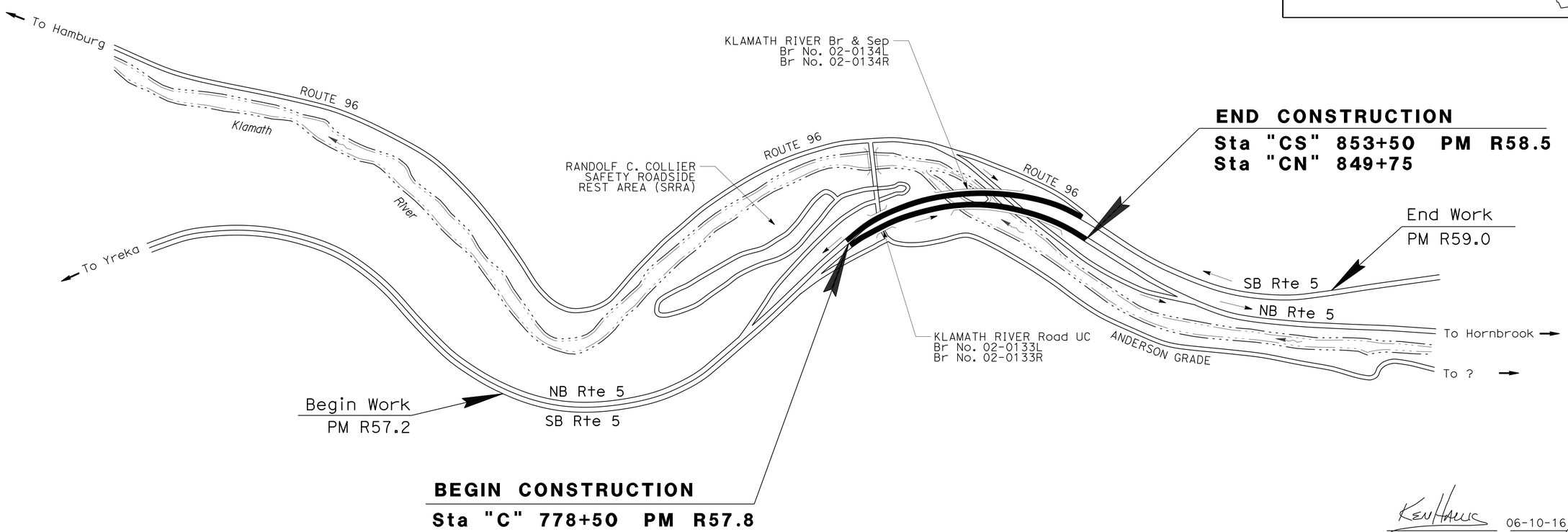

PROJECT MANAGER: ERIC AKANA

DESIGN MANAGER: ERIC ORR

P:\proj1\02\4F58u_plans\pse\24f58uab001.dgn

THE CONTRACTOR SHALL POSSESS THE CLASS (OR CLASSES) OF LICENSE AS SPECIFIED IN THE "NOTICE TO BIDDERS."

NO SCALE

KEN HALLIS 06-10-16

PROJECT ENGINEER DATE
REGISTERED CIVIL ENGINEER

June 15, 2016

PLANS APPROVAL DATE

REGISTERED PROFESSIONAL ENGINEER — KEN HALLIS — No. C38203 — Exp. 3-31-17 — CIVIL — STATE OF CALIFORNIA

THE STATE OF CALIFORNIA OR ITS OFFICERS OR AGENTS SHALL NOT BE RESPONSIBLE FOR THE ACCURACY OR COMPLETENESS OF SCANNED COPIES OF THIS PLAN SHEET.

CONTRACT No.	02-4F58U4
PROJECT ID	0215000021

LAST REVISION 06-05-16 | DATE PLOTTED => 21-JUN-2016 | TIME PLOTTED => 13:50

Dist	COUNTY	ROUTE	POST MILES TOTAL PROJECT	SHEET No.	TOTAL SHEETS
02	Sis	5	R57.8/R58.5	2	106

Ken Hallis 06-10-16
REGISTERED CIVIL ENGINEER DATE

06-15-16
PLANS APPROVAL DATE

REGISTERED PROFESSIONAL ENGINEER
KEN HALLIS
No. C38203
Exp. 3-31-17
STATE OF CALIFORNIA

THE STATE OF CALIFORNIA OR ITS OFFICERS OR AGENTS SHALL NOT BE RESPONSIBLE FOR THE ACCURACY OR COMPLETENESS OF ELECTRONIC COPIES OF THIS PLAN SHEET.

NOTES:

1. DIMENSIONS OF THE PAVEMENT STRUCTURES (STRUCTURAL SECTIONS) ARE SUBJECT TO TOLERANCES SPECIFIED IN THE STANDARD SPECIFICATIONS.
2. SEE STRUCTURES PLANS FOR WORK ON BRIDGE LOCATIONS.

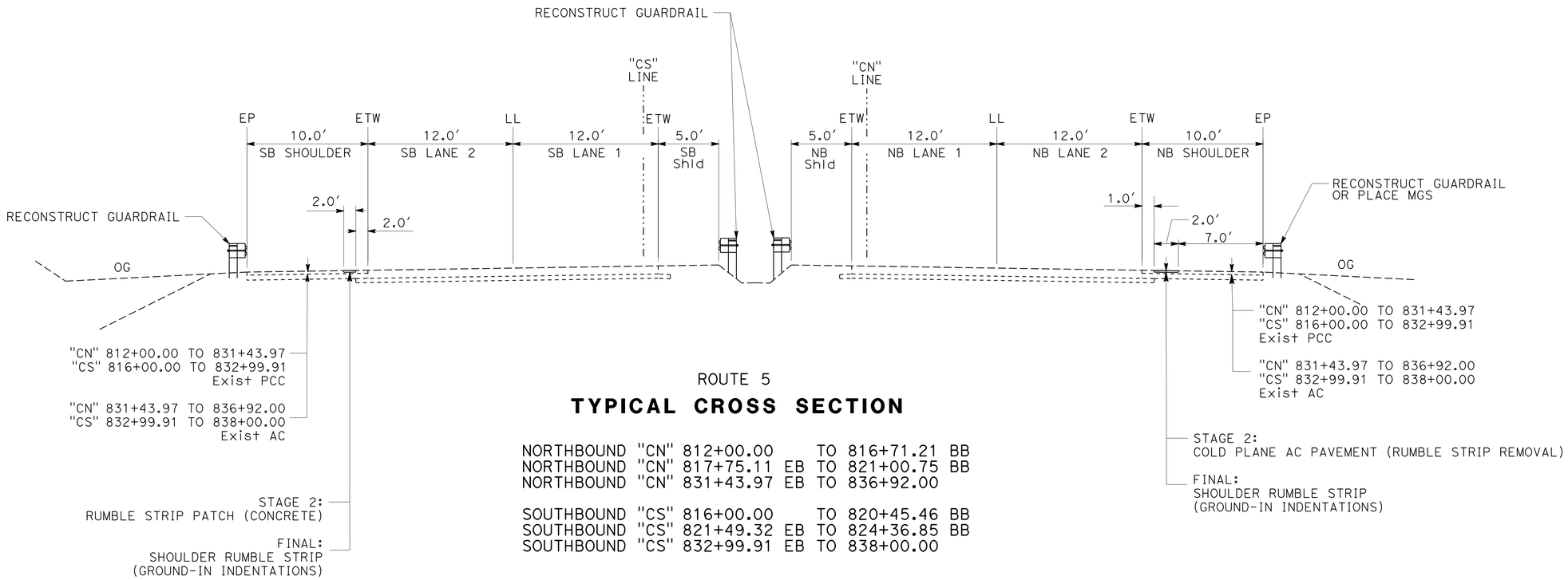

ROUTE 5

TYPICAL CROSS SECTION

NORTHBOUND "CN" 812+00.00 TO 816+71.21 BB
NORTHBOUND "CN" 817+75.11 EB TO 821+00.75 BB
NORTHBOUND "CN" 831+43.97 EB TO 836+92.00

SOUTHBOUND "CS" 816+00.00 TO 820+45.46 BB
SOUTHBOUND "CS" 821+49.32 EB TO 824+36.85 BB
SOUTHBOUND "CS" 832+99.91 EB TO 838+00.00

TYPICAL CROSS SECTIONS

NO SCALE

X-1

REVISED BY	DATE REVISED

CALCULATED-DESIGNED BY	CHECKED BY
DAN BROWN	KEN HALLIS

FUNCTIONAL SUPERVISOR: ERIC ORR

STATE OF CALIFORNIA - DEPARTMENT OF TRANSPORTATION
Caltrans DESIGN

P:\proj1\02\4F58u_plans\pse\24f58uca001.dgn

LAST REVISION 04-11-16 | DATE PLOTTED => 21-JUN-2016 | TIME PLOTTED => 13:50

Dist	COUNTY	ROUTE	POST MILES TOTAL PROJECT	SHEET No.	TOTAL SHEETS
02	Sis	5	R57.8/R58.5	3	106

REGISTERED CIVIL ENGINEER DATE 06-10-16

PLANS APPROVAL DATE 06-15-16

REGISTERED PROFESSIONAL ENGINEER KEN HALLIS No. C38203 Exp. 3-31-17 STATE OF CALIFORNIA

THE STATE OF CALIFORNIA OR ITS OFFICERS OR AGENTS SHALL NOT BE RESPONSIBLE FOR THE ACCURACY OR COMPLETENESS OF ELECTRONIC COPIES OF THIS PLAN SHEET.

NOTE:

1. FOR ACCURATE RIGHT OF WAY DATA, CONTACT RIGHT OF WAY ENGINEERING AT THE DISTRICT OFFICE.

LEGEND:

- APPROACH SLAB (SEE STRUCTURE PLANS)
- CONCRETE BARRIER Br No. 02-133 Rt/Lt (SEE STRUCTURE PLANS)
- CONCRETE BARRIER Br No. 02-134 Rt/Lt (SEE STRUCTURE PLANS)
- CONCRETE BARRIER SLAB (SEE STRUCTURE PLANS)
- SHOULDER RUMBLE STRIP (GROUND-IN INDENTATIONS)

ABBREVIATIONS:

SRS SHOULDER RUMBLE STRIP (GROUND-IN INDENTATIONS)

AFTS ALTERNATIVE FLARED TERMINAL SYSTEM

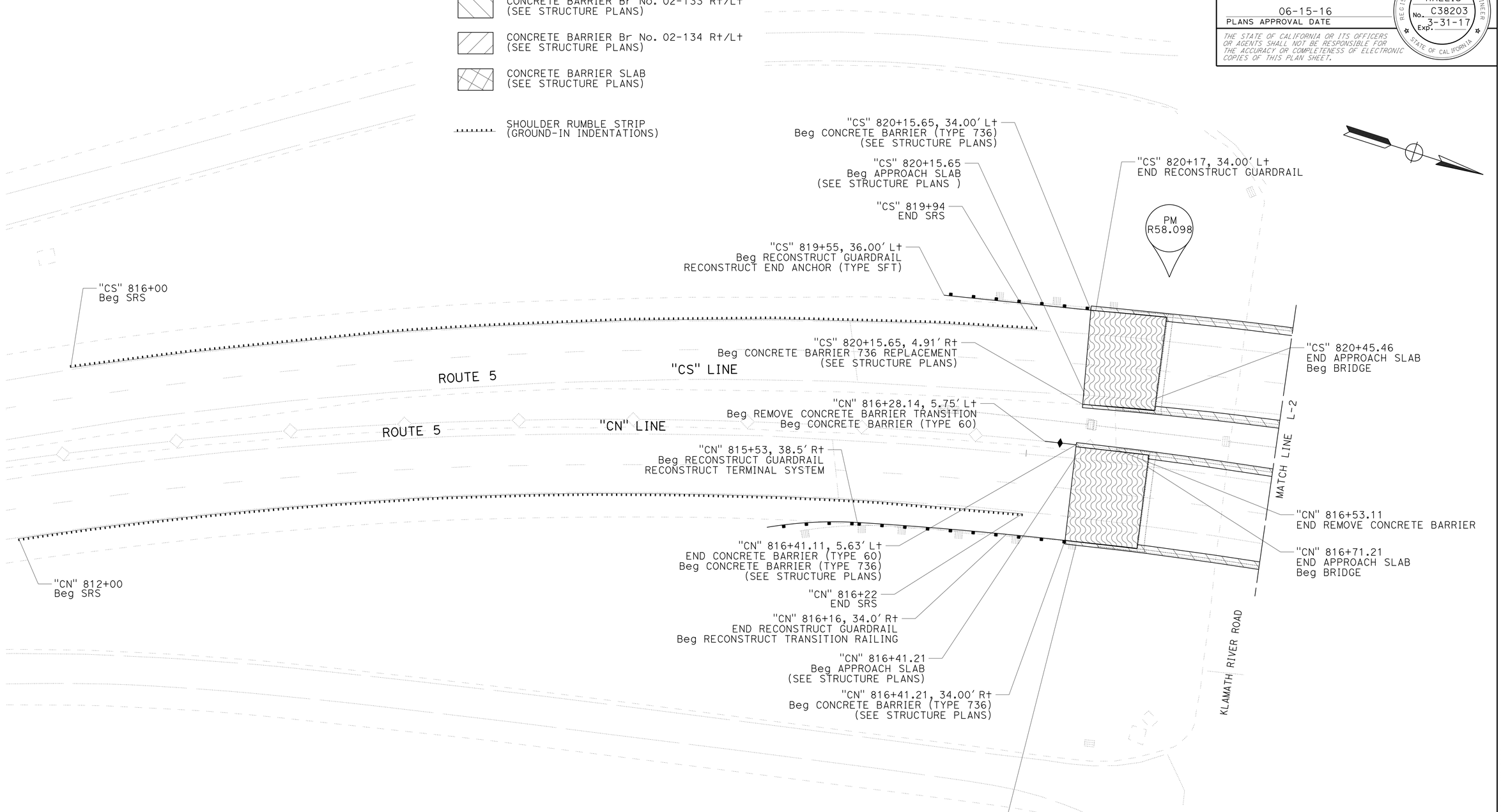

LAYOUT

SCALE: 1" = 20'

L-1

REVISED BY	DATE REVISED
DAN BROWN	KEN HALLIS
CALCULATED-DESIGNED BY	CHECKED BY
FUNCTIONAL SUPERVISOR	ERIC ORR

STATE OF CALIFORNIA - DEPARTMENT OF TRANSPORTATION

Caltrans **DESIGN**

P:\proj1\02\4F58u_plans\pse\24f58uea001.dgn

LAST REVISION 04-11-16 | DATE PLOTTED => 21-JUN-2016 | TIME PLOTTED => 13:50

Dist	COUNTY	ROUTE	POST MILES TOTAL PROJECT	SHEET No.	TOTAL SHEETS
02	Sis	5	R57.8/R58.5	4	106

Ken Hallis 06-10-16
REGISTERED CIVIL ENGINEER DATE

06-15-16
PLANS APPROVAL DATE

REGISTERED PROFESSIONAL ENGINEER KEN HALLIS No. C38203 Exp. 3-31-17 STATE OF CALIFORNIA

THE STATE OF CALIFORNIA OR ITS OFFICERS OR AGENTS SHALL NOT BE RESPONSIBLE FOR THE ACCURACY OR COMPLETENESS OF ELECTRONIC COPIES OF THIS PLAN SHEET.

NOTES:

1. FOR ACCURATE RIGHT OF WAY DATA, CONTACT RIGHT OF WAY ENGINEERING AT THE DISTRICT OFFICE.
2. ADJUST MBGR ELEMENT TO MANUFACTURER'S HOLES.

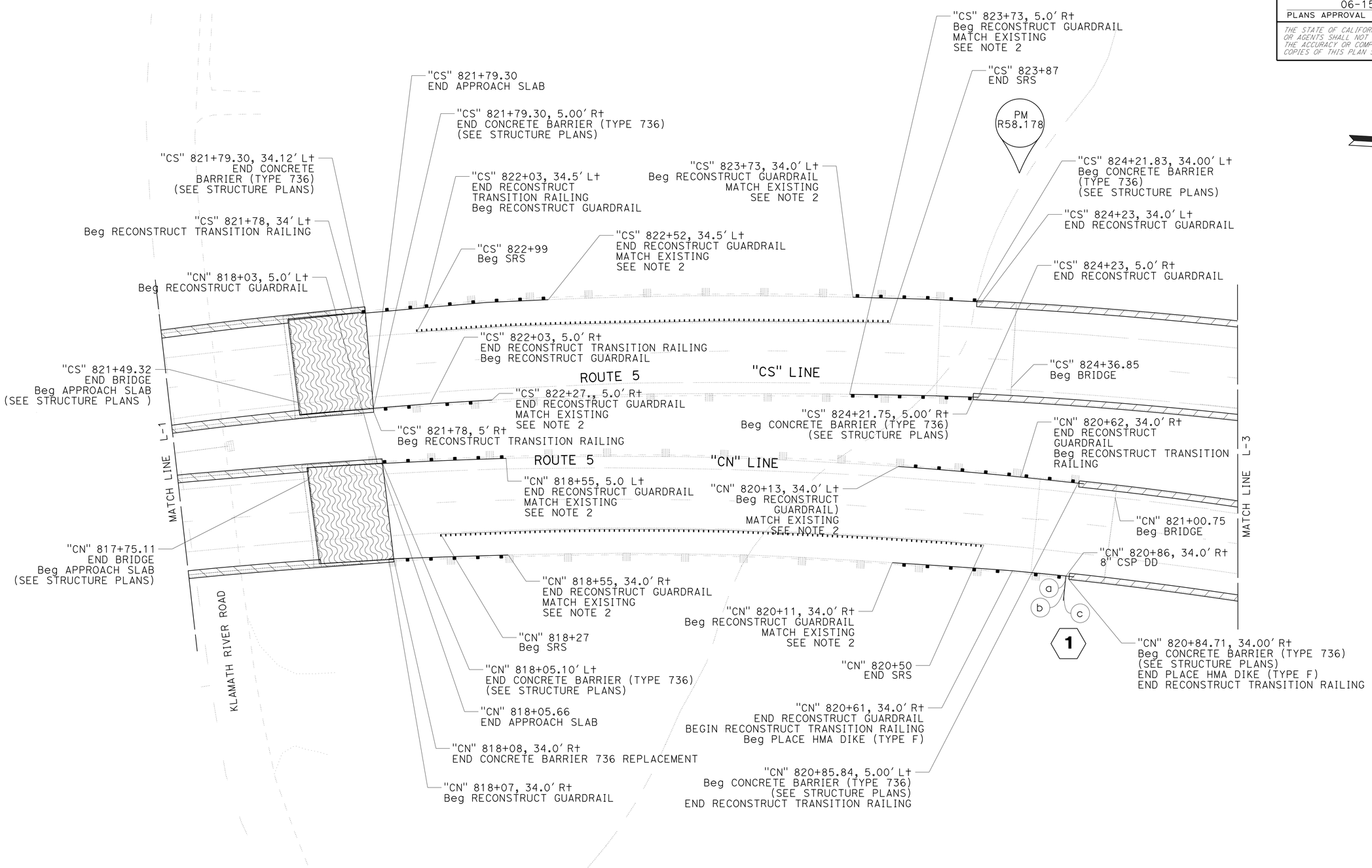

LAYOUT

SCALE: 1" = 20' **L-2**

REVISED BY	DATE REVISED	DAN BROWN	KEN HALLIS	CALCULATED-DESIGNED BY	CHECKED BY	FUNCTIONAL SUPERVISOR	ERIC ORR

STATE OF CALIFORNIA - DEPARTMENT OF TRANSPORTATION
Caltrans DESIGN

P:\proj1\02\4F58u_plans\pse\24f58uea002.dgn

LAST REVISION 04-11-16 | DATE PLOTTED => 21-JUN-2016 | TIME PLOTTED => 13:50

Dist	COUNTY	ROUTE	POST MILES TOTAL PROJECT	SHEET No.	TOTAL SHEETS
02	Sis	5	R57.8/R58.5	5	106

REGISTERED CIVIL ENGINEER DATE 06-10-16

PLANS APPROVAL DATE 06-15-16

REGISTERED PROFESSIONAL ENGINEER KEN HALLIS No. C38203 Exp. 3-31-17 STATE OF CALIFORNIA

THE STATE OF CALIFORNIA OR ITS OFFICERS OR AGENTS SHALL NOT BE RESPONSIBLE FOR THE ACCURACY OR COMPLETENESS OF ELECTRONIC COPIES OF THIS PLAN SHEET.

NOTE:

1. FOR ACCURATE RIGHT OF WAY DATA, CONTACT RIGHT OF WAY ENGINEERING AT THE DISTRICT OFFICE.

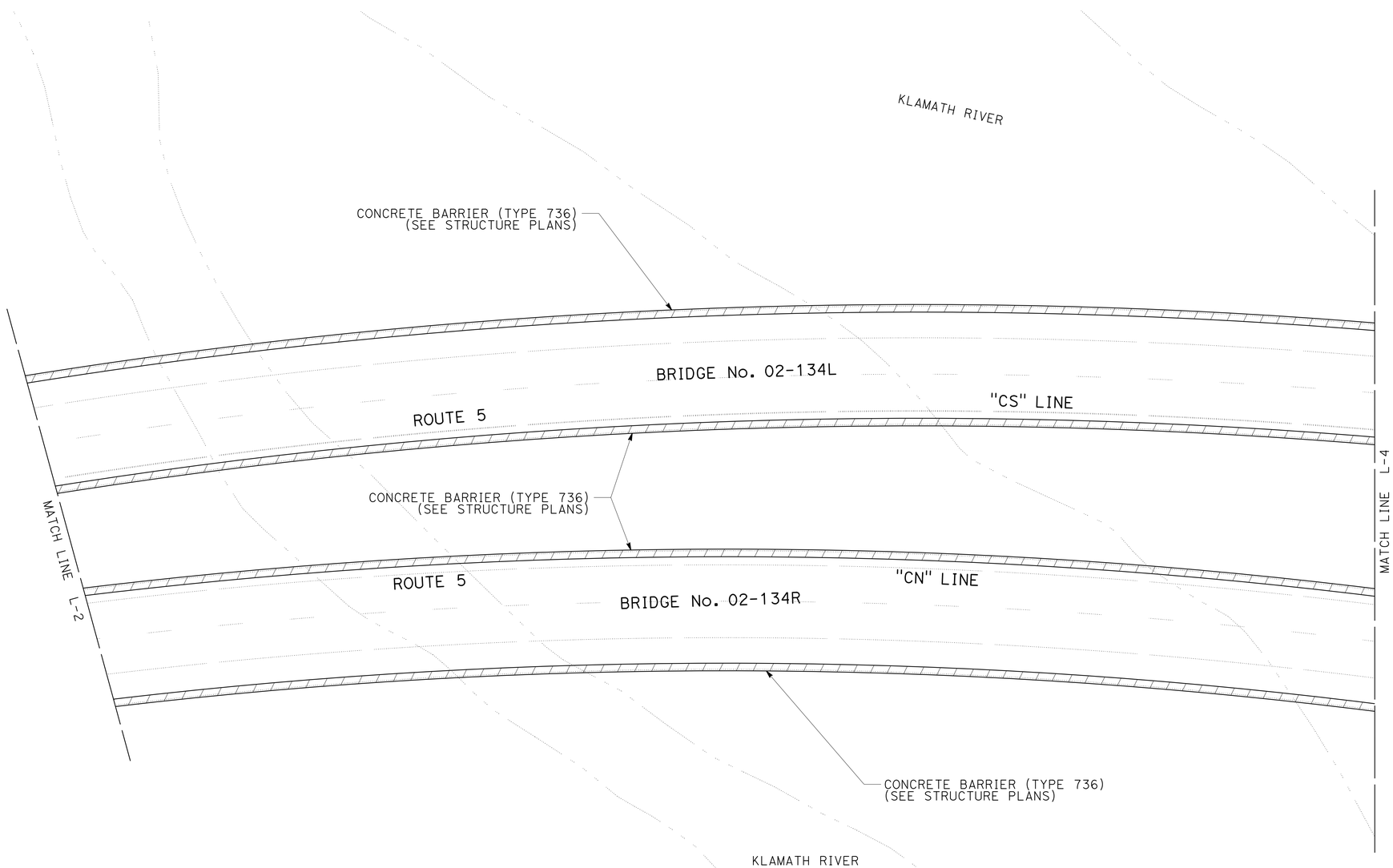

LAYOUT

SCALE: 1" = 20′ **L-3**

REVISED BY	DATE REVISED

CALCULATED-DESIGNED BY: DAN BROWN
CHECKED BY: KEN HALLIS
FUNCTIONAL SUPERVISOR: ERIC ORR

STATE OF CALIFORNIA - DEPARTMENT OF TRANSPORTATION
Caltrans DESIGN

P:\proj1\02\4f58u_plans\pse\24f58uea003.dgn

LAST REVISION 04-11-16 | DATE PLOTTED => 21-JUN-2016 | TIME PLOTTED => 13:50

Dist	COUNTY	ROUTE	POST MILES TOTAL PROJECT	SHEET No.	TOTAL SHEETS
02	Sis	5	R57.8/R58.5	6	106

REGISTERED CIVIL ENGINEER DATE 06-10-16

PLANS APPROVAL DATE 06-15-16

REGISTERED PROFESSIONAL ENGINEER KEN HALLIS No. C38203 Exp. 3-31-17 STATE OF CALIFORNIA

THE STATE OF CALIFORNIA OR ITS OFFICERS OR AGENTS SHALL NOT BE RESPONSIBLE FOR THE ACCURACY OR COMPLETENESS OF ELECTRONIC COPIES OF THIS PLAN SHEET.

NOTE:

1. FOR ACCURATE RIGHT OF WAY DATA, CONTACT RIGHT OF WAY ENGINEERING AT THE DISTRICT OFFICE.
2. SEE SHEET C-1 FOR OVERLAP DETAIL TO CONNECT TO EXISTING GUARDRAIL.

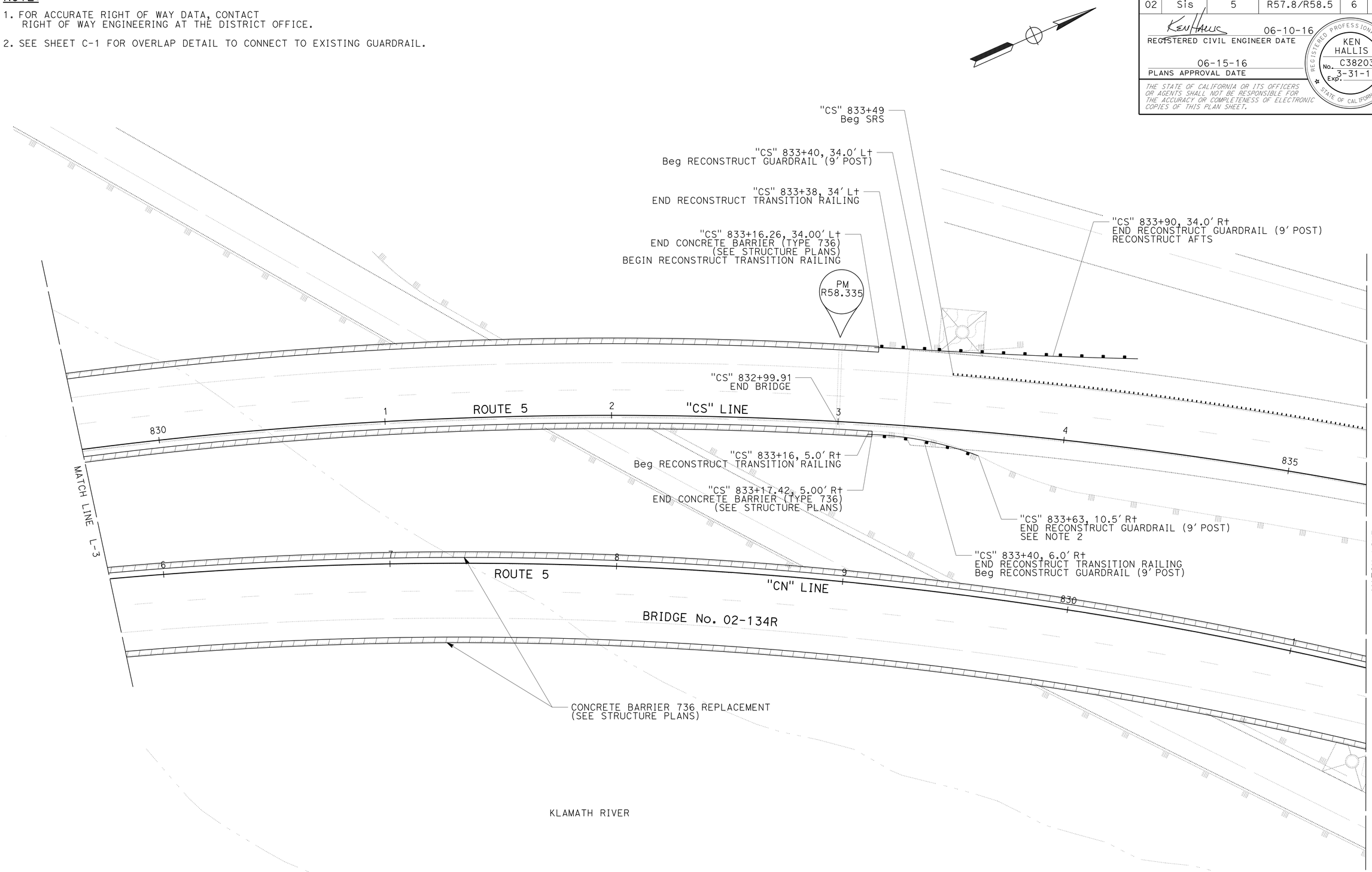

LAYOUT

SCALE: 1" = 20' **L-4**

REVISED BY	DATE REVISED
DAN BROWN	KEN HALLIS

CALCULATED-DESIGNED BY	CHECKED BY

FUNCTIONAL SUPERVISOR: ERIC ORR

STATE OF CALIFORNIA - DEPARTMENT OF TRANSPORTATION

Caltrans **DESIGN**

P:\proj1\02\4F58u_plans\pse\24f58ued004.dgn

LAST REVISION 04-11-16 | DATE PLOTTED => 21-JUN-2016 | TIME PLOTTED => 13:50

Dist	COUNTY	ROUTE	POST MILES TOTAL PROJECT	SHEET No.	TOTAL SHEETS
02	Sis	5	R57.8/R58.5	7	106

REGISTERED CIVIL ENGINEER DATE 06-10-16

PLANS APPROVAL DATE 06-15-16

REGISTERED PROFESSIONAL ENGINEER KEN HALLIS No. C38203 Exp. 3-31-17 STATE OF CALIFORNIA

THE STATE OF CALIFORNIA OR ITS OFFICERS OR AGENTS SHALL NOT BE RESPONSIBLE FOR THE ACCURACY OR COMPLETENESS OF ELECTRONIC COPIES OF THIS PLAN SHEET.

NOTE:

1. FOR ACCURATE RIGHT OF WAY DATA, CONTACT RIGHT OF WAY ENGINEERING AT THE DISTRICT OFFICE.

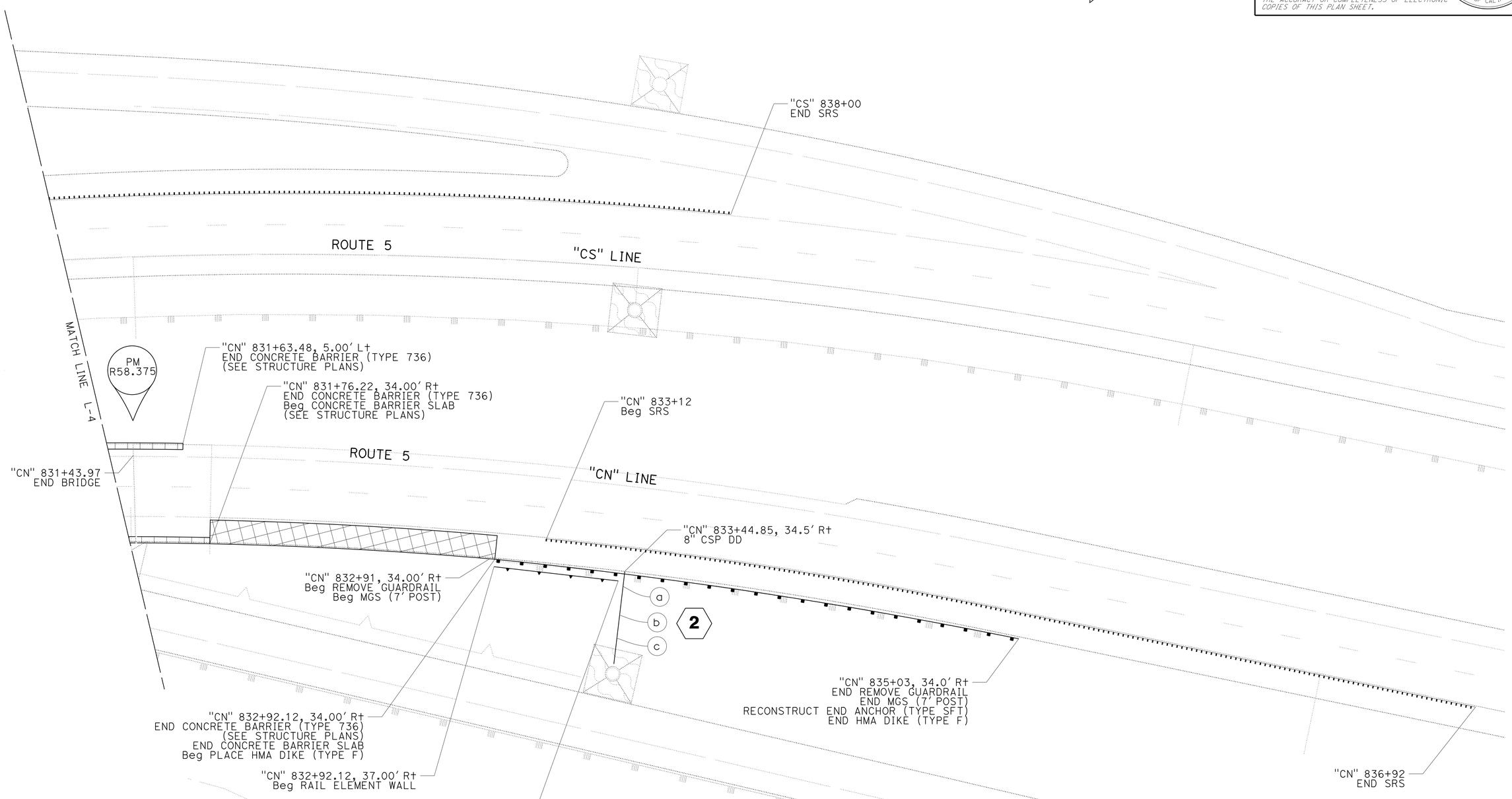

LAYOUT

SCALE: 1" = 20'

L-5

STATE OF CALIFORNIA - DEPARTMENT OF TRANSPORTATION

Caltrans DESIGN

FUNCTIONAL SUPERVISOR: ERIC ORR

CALCULATED-DESIGNED BY: DAN BROWN

CHECKED BY: KEN HALLIS

REVISED BY

DATE REVISED

P:\proj1\02\4F58u_plans\pse\24f58ued005.dgn

LAST REVISION 04-11-16

DATE PLOTTED => 21-JUN-2016

TIME PLOTTED => 13:50

Dist	COUNTY	ROUTE	POST MILES TOTAL PROJECT	SHEET No.	TOTAL SHEETS
02	Sis	5	R57.8/R58.5	8	106

Ken Hallis 06-10-16
REGISTERED CIVIL ENGINEER DATE

06-15-16
PLANS APPROVAL DATE

REGISTERED PROFESSIONAL ENGINEER KEN HALLIS No. C38203 Exp. 3-31-17 STATE OF CALIFORNIA

THE STATE OF CALIFORNIA OR ITS OFFICERS OR AGENTS SHALL NOT BE RESPONSIBLE FOR THE ACCURACY OR COMPLETENESS OF ELECTRONIC COPIES OF THIS PLAN SHEET.

NOTE:

1. ELEMENTS OF EARTH RETAINING SYSTEM TO BE BOLTED LIKE GUARDRAIL WITH 8 BOLTS AT SPLICE, AND SPLICES ARE TO BE AT POST.

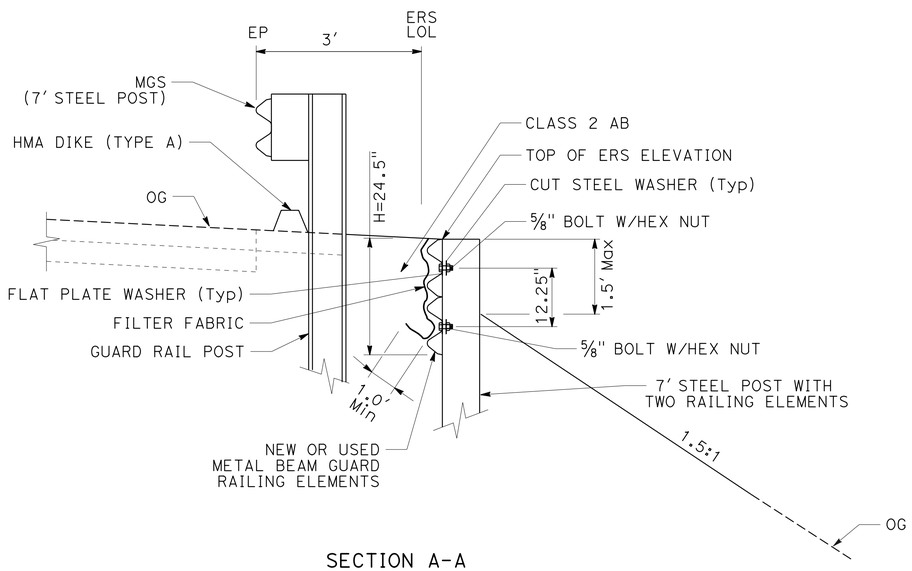

SECTION A-A

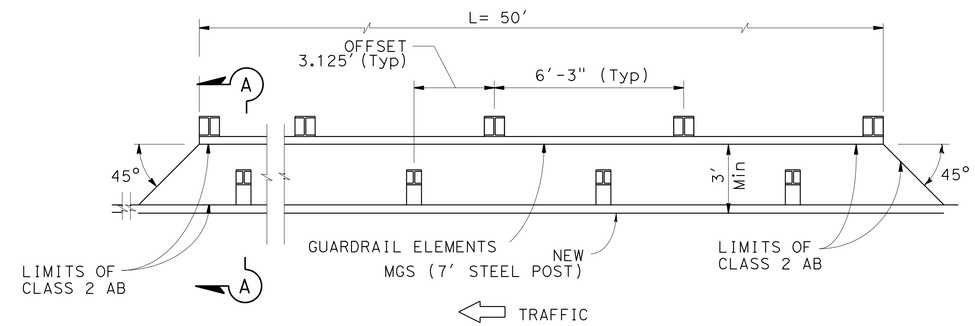

PLAN

RAIL ELEMENT WALL

"CN" 832+92.12 TO 833+42.12

CONSTRUCTION DETAILS

NO SCALE

C-1

REVISED BY	DATE REVISED

CALCULATED-DESIGNED BY: DAN BROWN
CHECKED BY: KEN HALLIS
FUNCTIONAL SUPERVISOR: ERIC ORR

STATE OF CALIFORNIA - DEPARTMENT OF TRANSPORTATION
Caltrans **DESIGN**

P:\proj1\02\4f58u_plans\pse\24f58uga001.dgn

LAST REVISION 04-11-16 | DATE PLOTTED => 21-JUN-2016 | TIME PLOTTED => 13:50

Dist	COUNTY	ROUTE	POST MILES TOTAL PROJECT	SHEET No.	TOTAL SHEETS
02	Sis	5	R57.8/R58.5	9	106

REGISTERED CIVIL ENGINEER DATE 06-10-16

PLANS APPROVAL DATE 06-15-16

REGISTERED PROFESSIONAL ENGINEER KEN HALLIS No. C38203 Exp. 3-31-17 STATE OF CALIFORNIA

THE STATE OF CALIFORNIA OR ITS OFFICERS OR AGENTS SHALL NOT BE RESPONSIBLE FOR THE ACCURACY OR COMPLETENESS OF ELECTRONIC COPIES OF THIS PLAN SHEET.

NOTES:

1. FOR RUMBLE STRIP DETAILS NOT SHOWN, SEE STANDARD PLAN A40B.
2. RUMBLE STRIPS SHALL BE INSTALLED ON OUTSIDE SHOULDERS ONLY, EXCEPT AT RAMPS OR ACROSS STRUCTURES.
3. SEE SUMMARY OF QUANTITIES FOR LIMITS.

LEGEND:

DIRECTION OF TRAVEL

SHOULDER RUMBLE STRIP (GROUND-IN INDENTATIONS)

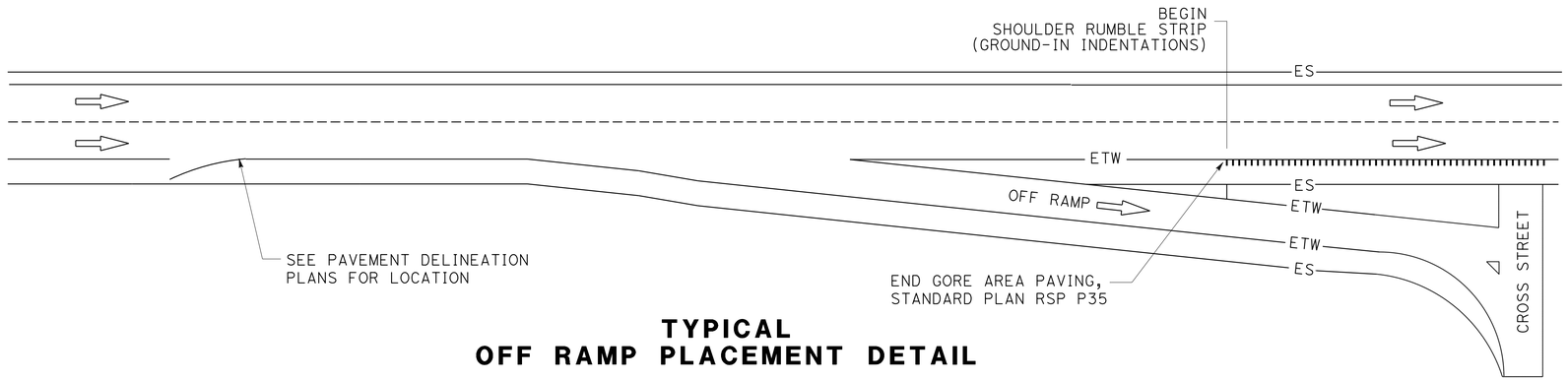

TYPICAL
OFF RAMP PLACEMENT DETAIL

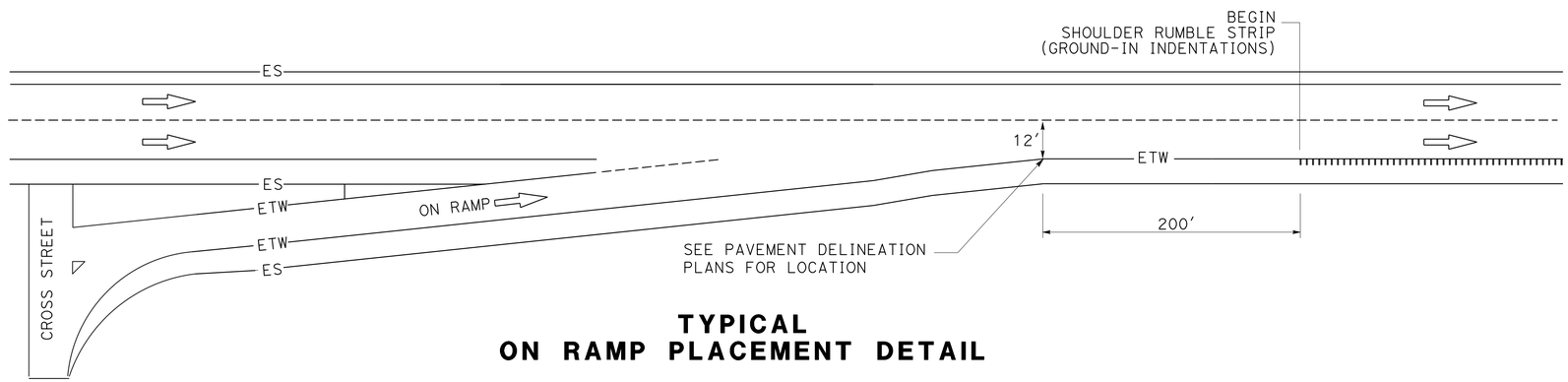

TYPICAL
ON RAMP PLACEMENT DETAIL

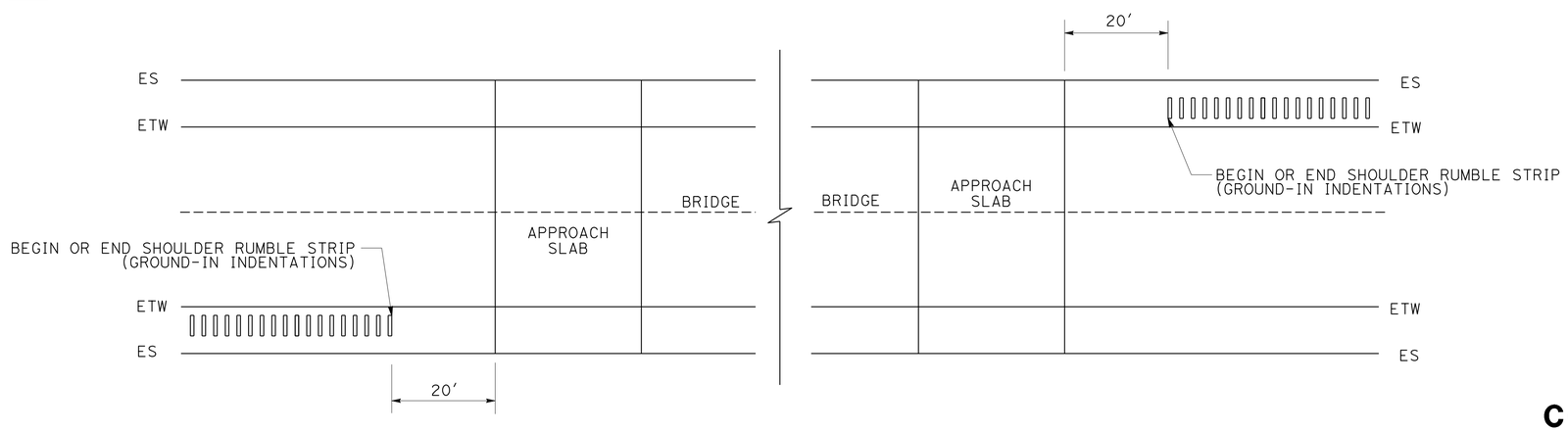

TYPICAL
STRUCTURE PLACEMENT DETAIL

CONSTRUCTION DETAILS
SHOULDER RUMBLE STRIP (GROUND-IN INDENTATIONS) TYPICAL PLACEMENT DETAILS

NO SCALE

C-2

STATE OF CALIFORNIA - DEPARTMENT OF TRANSPORTATION
Caltrans **DESIGN**

FUNCTIONAL SUPERVISOR: ERIC ORR
CALCULATED-DESIGNED BY: DAN BROWN
CHECKED BY: KEN HALLIS
REVISED BY
DATE REVISED

P:\proj1\02\4F58u_plans\pse\24f58uga002.dgn

LAST REVISION 04-11-16
DATE PLOTTED => 21-JUN-2016
TIME PLOTTED => 13:50

Dist	COUNTY	ROUTE	POST MILES TOTAL PROJECT	SHEET No.	TOTAL SHEETS
02	Sis	5	R57.8/R58.5	10	106

KEN HALLIS 06-10-16
REGISTERED CIVIL ENGINEER DATE

06-15-16
PLANS APPROVAL DATE

REGISTERED PROFESSIONAL ENGINEER KEN HALLIS No. C38203 Exp. 3-31-17 STATE OF CALIFORNIA

THE STATE OF CALIFORNIA OR ITS OFFICERS OR AGENTS SHALL NOT BE RESPONSIBLE FOR THE ACCURACY OR COMPLETENESS OF ELECTRONIC COPIES OF THIS PLAN SHEET.

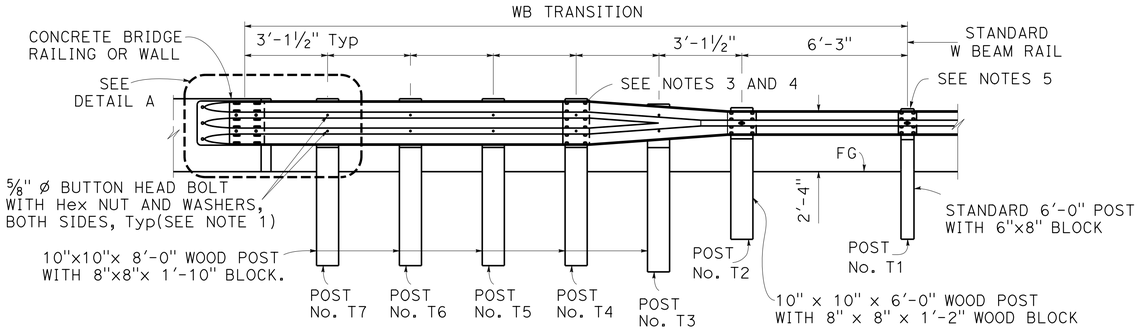

ELEVATION

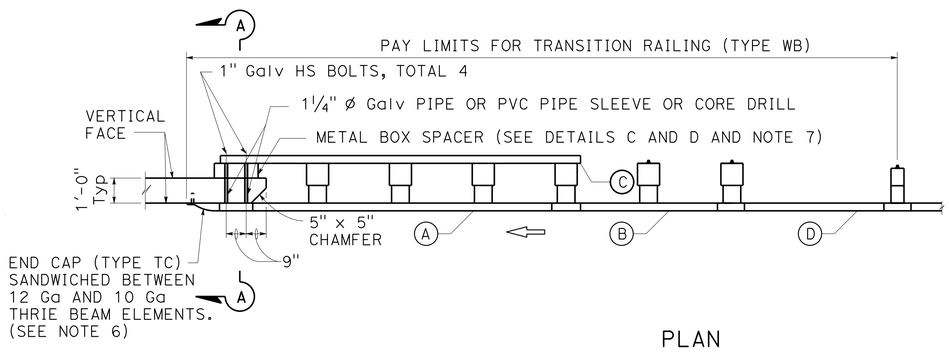

PLAN

TRANSITION RAILING

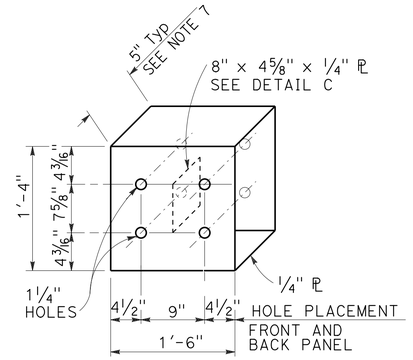

DETAIL D

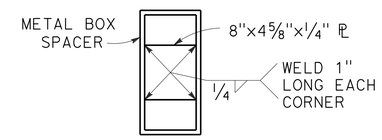

DETAIL C
METAL BOX SPACER

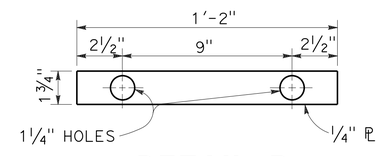

DETAIL B
PLATE 'A'

NOTES:

1. USE ⅝" Ø BUTTON HEAD BOLTS WITH ℙ WASHERS AND HEX NUTS FOR CONNECTIONS TO 10"x10" WOOD POSTS. PLACE ℙ WASHER UNDER BOLT AND NUT.
2. TAPER THE TOP OF THE ANCHOR BLOCK AT 4:1 TO 1" ABOVE TOP OF RAIL.
3. EXTERIOR SPLICE BOLT HOLES FOR RAIL ELEMENT SPLICES AT POST NO. T4 AND THE CONNECTION TO THE CONCRETE BARRIER OR RAILING SHALL BE THE STANDARD 13⁄16" X 1⅛" SLOT SIZE. INTERIOR SPLICE BOLT HOLES AT THESE LOCATIONS MAY BE INCREASED UP TO 1¼" Ø. ONLY THE TOP 4 AND THE BOTTOM 4 SPLICE BOLTS WITH WASHERS AND NUTS ARE REQUIRED FOR RAIL SPLICES AT POST NO. T4 AND THE TOP 2 AND THE BOTTOM 2 SPLICE BOLTS ARE REQUIRED AT THE CONNECTION TO THE CONCRETE BARRIER OR RAILING.
4. THE TOP ELEVATION OF POSTS NO. T2 THROUGH NO. T7 SHALL NOT PROJECT MORE THAN 1" ABOVE THE TOP ELEVATION OF THE RAIL ELEMENT.
5. THE GUARD RAILING CONNECTED TO TRANSITION RAILING (TYPE WB) WILL BE A STANDARD RAILING SECTION OF METAL BEAM GUARD RAILING WITH HEIGHT TRANSITION RATIO OF 120:1.
6. END CAP MAY BE INSTALLED OVER 12 Ga AND 10 Ga THRIE BEAM ELEMENTS WHERE TRANSITION RAILING IS INSTALLED ON THE DEPARTURE END OF BRIDGE RAILING.
7. THE DEPTH OF THE METAL BOX SPACER VARIES FROM 5⅛" TO 1½" AND IS DEPENDENT ON THE WIDTH OF THE CONCRETE RAILING OR WALL. THE COMBINED DIMENSION FOR THE DEPTH OF THE METAL BOX SPACER PLUS THE WIDTH OF RAILING OR WALL SHOULD BE 17⅛".
8. EXISTING UTILITY FACILITIES ARE NOT SHOWN ON THESE PLANS.

LEGEND

- (A) NESTED THRIE BEAM ELEMENTS (ONE 12 Ga ELEMENT NESTED OVER ONE 10 Ga ELEMENT).
- (B) ONE 10 Ga "W" BEAM TO THRIE BEAM ELEMENT.
- (C) ONE 12 Ga THRIE BEAM ELEMENT.
- (D) ONE 10 Ga "W" BEAM RAIL ELEMENT (7'-3½"LENGTH)

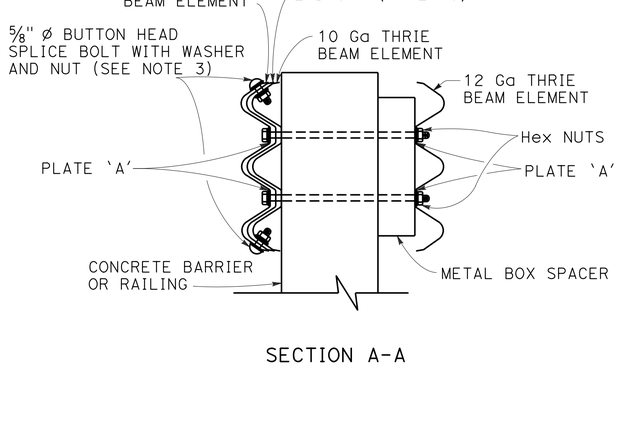

SECTION A-A

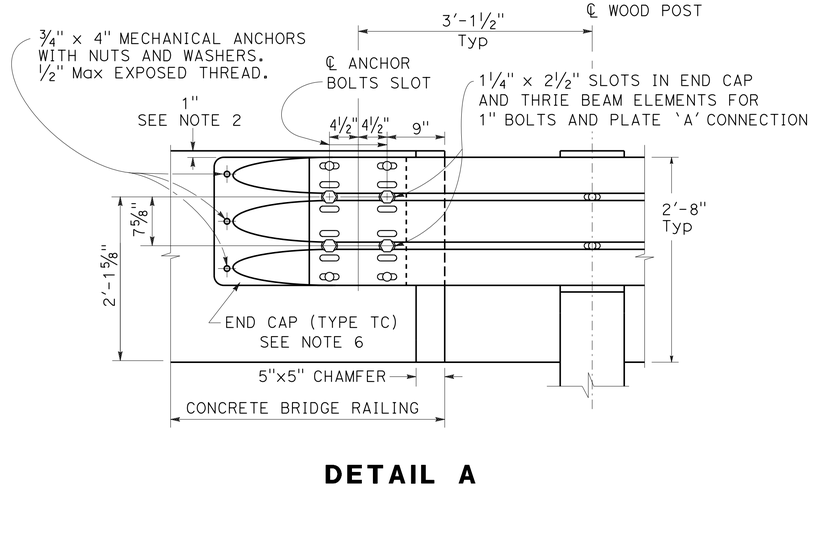

DETAIL A

CONSTRUCTION DETAILS
TRANSITION RAILING

NO SCALE

C-3

REVISED BY | DATE REVISED
DAN BROWN | KEN HALLIS
CALCULATED-DESIGNED BY | CHECKED BY
FUNCTIONAL SUPERVISOR: ERIC ORR

STATE OF CALIFORNIA - DEPARTMENT OF TRANSPORTATION
Caltrans DESIGN

P:\proj\02\4F58u_plans\pse\24f58uga003.dgn

LAST REVISION 04-11-16 | DATE PLOTTED => 21-JUN-2016 | TIME PLOTTED => 13:50

Dist	COUNTY	ROUTE	POST MILES TOTAL PROJECT	SHEET No.	TOTAL SHEETS
02	Sis	5	R57.8/R58.5	11	106

REGISTERED CIVIL ENGINEER 06-10-16 DATE

06-15-16
PLANS APPROVAL DATE

REGISTERED PROFESSIONAL ENGINEER JOHN HART No. 69586 Exp. 6/30/18 CIVIL STATE OF CALIFORNIA

THE STATE OF CALIFORNIA OR ITS OFFICERS OR AGENTS SHALL NOT BE RESPONSIBLE FOR THE ACCURACY OR COMPLETENESS OF SCANNED COPIES OF THIS PLAN SHEET.

NOTES:

1. A SINGLE LINE POST MAY BE OFFSET UP TO 12" ALONG THE GUARDRAIL. DO NOT CUT OR DRILL HOLE IN ELEMENT TO ATTACH ELEMENT TO POST AND BLOCK. IF THERE IS NO HOLE IN ELEMENT, ONLY BOLT BLOCK TO POST.
2. POSTS ARE TO BE W6X8.5 OR W6X9 UNLESS OTHERWISE SHOWN. FOR POST AND BLOCK DETAILS SEE STANDARD PLAN RSP A77N2. FOR RAIL ELEMENT AND HARDWARE DETAILS, USE DETAILS SHOWN FOR MGS ON RSP A77L2 AND RSP A77M1.
3. GUARDRAIL POSTS MUST BE A MINIMUM OF 1′ FROM BACK OF RETAINING WALL.
4. WHEN THERE IS A BREAK POINT IN FRONT OF GUARDRAIL BETWEEN 4′-8′ THE HEIGHT WILL BE DETERMINED BY THE ENGINEER.
5. PLACE RUB RAIL (GUARDRAIL ELEMENT) AND ATTACH TO POST WITH NO BLOCK WHEN HEIGHT OF GUARDRAIL IS MORE THAN 2" ABOVE STANDARD PLACEMENT HEIGHT (H).
6. FOR PARABOLIC FLARE OFFSETS, SEE RSP A77P1. DO NOT FLARE GUARDRAIL AT MORE THAN 15:1 AWAY FROM THE ETW UNLESS SHOWN.
7. FOR CURB AND DIKE DETAILS, SEE STANDARD PLAN RSP A87A AND RSP A87B.
8. ONLY TYPE C DIKE MAY BE USED UNDER, OR IN FRONT OF, OR WITHIN 25′ OF APPROACH TO TERMINAL SYSTEMS. SEE GUARDRAIL LAYOUTS IN STANDARD PLANS. ONLY TYPE C DIKE MAY BE PLACED MORE THAN 2" IN FRONT OF FACE OF MBGR AND MORE THAN 7" IN FRONT OF MGS.
9. DIKE OR CURB MUST BE PLACED IN THE STANDARD POSITION OR AS AUTHORIZED. FOR MGS WITH 12" BLOCKS ONLY, THE TOE OF THE DIKE OR CURB MAY BE UP TO 7" IN FRONT OF THE FACE OF RAIL IF AUTHORIZED.
10. THE MAXIMUM HEIGHT OF THE DIKE OR CURB SHALL BE 4" FOR MBGR, AND 6" FOR MGS WITH 12" BLOCKS. 6" MOUNTABLE DIKE SHOULD NOT BE USED UNDER GUARDRAIL.
11. IF THE WIDTH OF THE PAVED SHOULDER IS REDUCED APPROACHING A FIXED OBJECT, PLACE A "P" MARKER INSTEAD OF THE L-1 MARKER.
12. EXISTING UTILITY FACILITIES HAVE NOT BEEN INCLUDED ON THESE PLANS

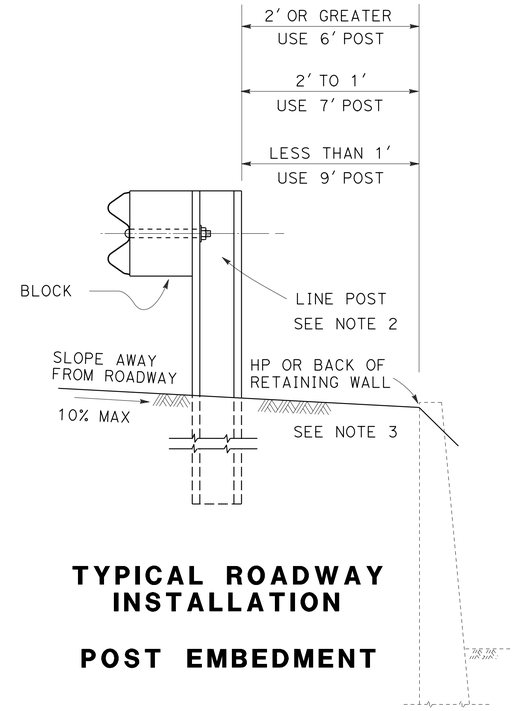

TYPICAL ROADWAY INSTALLATION

POST EMBEDMENT

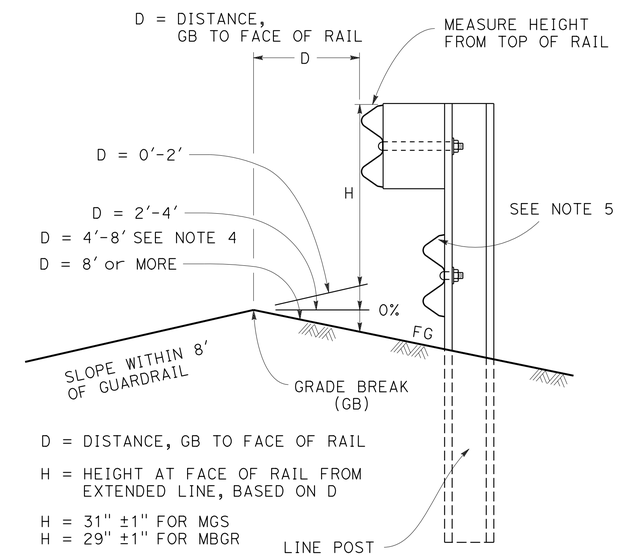

MEASURE HEIGHT DETAIL AT GRADE BREAK (GB)

WHEN THERE IS A GRADE BREAK IN FRONT OF GUARDRAIL MEASURE HEIGHT OF GUARDRAIL BASED ON DISTANCE FROM GRADE BREAK TO ADJUST FOR TRAJECTORY.

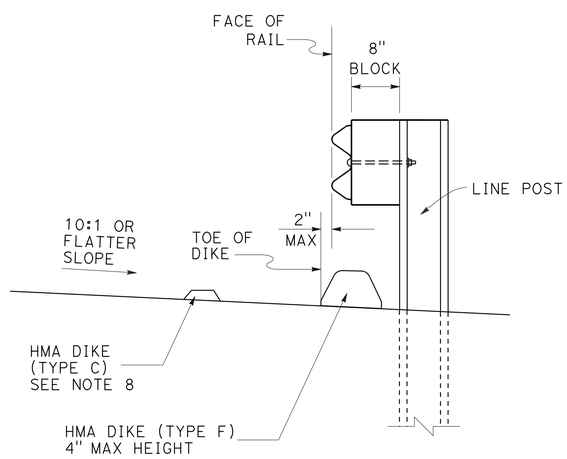

GUARDRAIL WITH 8" BLOCK

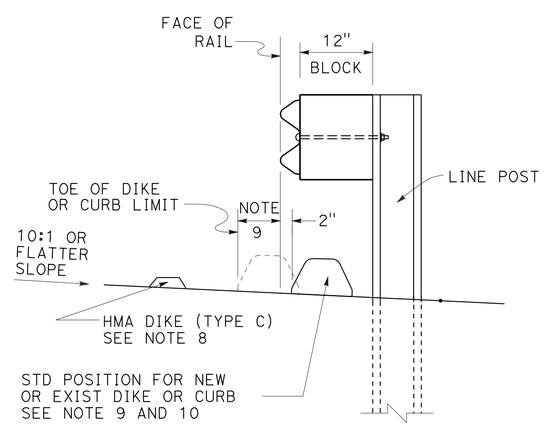

GUARDRAIL WITH 12" BLOCK

W-BEAM GUARDRAIL DIKE POSITIONING

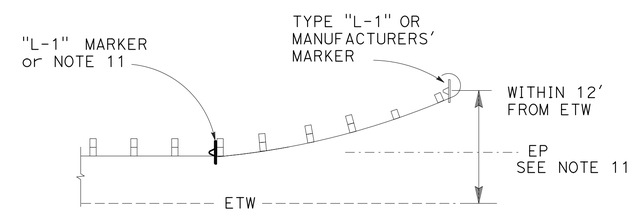

GUARDRAIL DELINEATION

CONSTRUCTON DETAILS W-BEAM GUARDRAIL

NO SCALE

C-4

REVISED BY	DATE REVISED
JOHN HART	DWIGHT WINTERLIN
CALCULATED-DESIGNED BY	CHECKED BY
FUNCTIONAL SUPERVISOR	KRISTI WESTOBY

STATE OF CALIFORNIA - DEPARTMENT OF TRANSPORTATION
Caltrans TRAFFIC SAFETY

P:\proj1\02\4F58u_plans\pse\24f58uga004.dgn

LAST REVISION 05-23-16 | DATE PLOTTED => 21-JUN-2016 | TIME PLOTTED => 13:50

Dist	COUNTY	ROUTE	POST MILES TOTAL PROJECT	SHEET No.	TOTAL SHEETS
02	Sis	5	R57.8/R58.5	12	106

KEN HALLIS 06-10-16
REGISTERED CIVIL ENGINEER DATE

06-15-16
PLANS APPROVAL DATE

REGISTERED PROFESSIONAL ENGINEER KEN HALLIS No. C38203 Exp. 3-31-17 STATE OF CALIFORNIA

THE STATE OF CALIFORNIA OR ITS OFFICERS OR AGENTS SHALL NOT BE RESPONSIBLE FOR THE ACCURACY OR COMPLETENESS OF ELECTRONIC COPIES OF THIS PLAN SHEET.

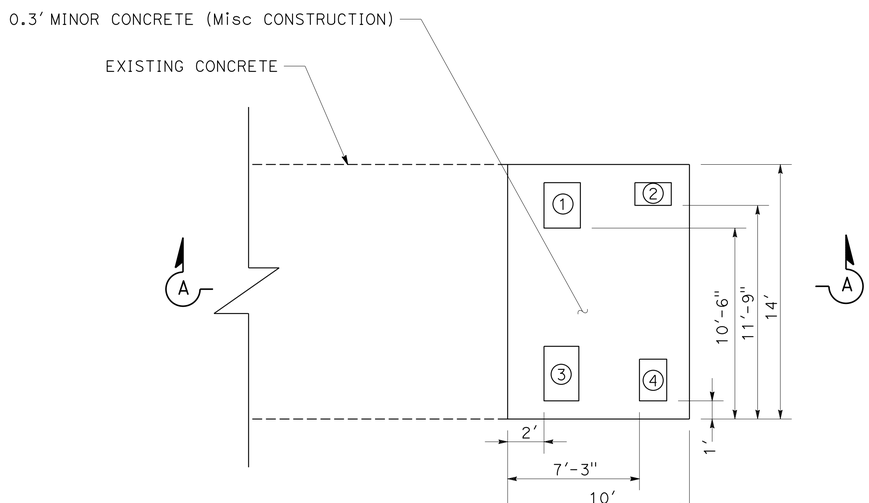

NOTES:

1. Xfmr CABINET (TYPE 334 MODIFIED)
2. TYPE B TDC
3. No. 6 PULL BOX
4. No.5 PULL BOX

PLAN

CONTROLLER EQUIPMENT PAD DETAIL

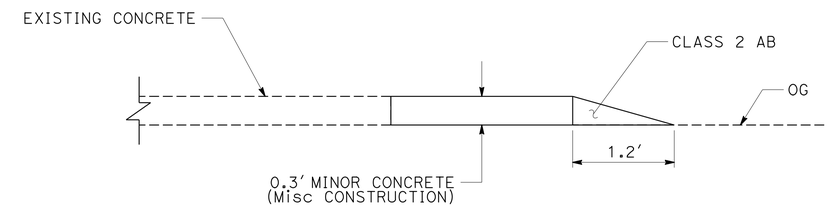

SECTION A-A

CONSTRUCTION DETAILS

NO SCALE

C-5

REVISED BY	DATE REVISED

CALCULATED-DESIGNED BY	DAN BROWN
CHECKED BY	KEN HALLIS
FUNCTIONAL SUPERVISOR	ERIC ORR

STATE OF CALIFORNIA - DEPARTMENT OF TRANSPORTATION
Caltrans DESIGN

P:\proj1\02\4F58u_plans\pse\24f58uga005.dgn

LAST REVISION 04-11-16 | DATE PLOTTED => 21-JUN-2016 | TIME PLOTTED => 13:50

Dist	COUNTY	ROUTE	POST MILES TOTAL PROJECT	SHEET No.	TOTAL SHEETS
02	Sis	5	R57.8/R58.5	13	106

Ken Hallis 06-10-16
REGISTERED CIVIL ENGINEER DATE

06-15-16
PLANS APPROVAL DATE

REGISTERED PROFESSIONAL ENGINEER KEN HALLIS No. C38203 Exp. 3-31-17 STATE OF CALIFORNIA

THE STATE OF CALIFORNIA OR ITS OFFICERS OR AGENTS SHALL NOT BE RESPONSIBLE FOR THE ACCURACY OR COMPLETENESS OF ELECTRONIC COPIES OF THIS PLAN SHEET.

NOTE:

1. CALTRANS UTILITIES ARE NOT POSITIVELY LOCATED.

ABBREVIATIONS:

CT CALTRANS

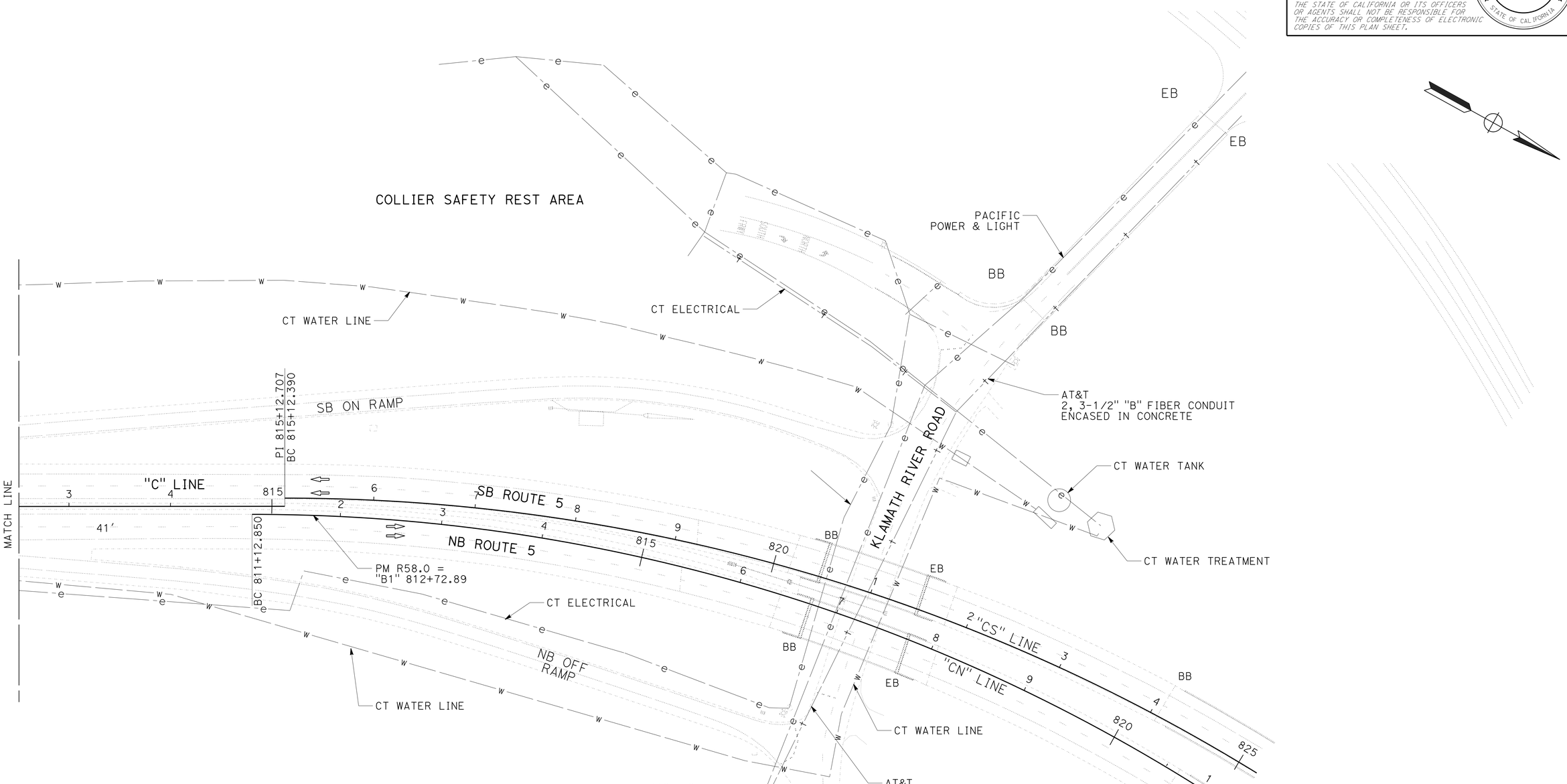

UTILITY PLAN

SCALE: 1" = 50'

U-1

APPROVED FOR UTILITY WORK ONLY

STATE OF CALIFORNIA - DEPARTMENT OF TRANSPORTATION
Caltrans **DESIGN**

FUNCTIONAL SUPERVISOR: ERIC ORR
CALCULATED-DESIGNED BY: DAN BROWN
CHECKED BY: KEN HALLIS
REVISED BY
DATE REVISED

P:\proj1\02\4F58u_plans\pse\24f58uka001.dgn

LAST REVISION 04-11-16
DATE PLOTTED => 21-JUN-2016
TIME PLOTTED => 13:50

BORDER LAST REVISED 7/2/2010
USERNAME => S123119
DGN FILE => 24f58uka001.dgn
RELATIVE BORDER SCALE IS IN INCHES 0 1 2 3
UNIT 0316
PROJECT NUMBER & PHASE 02 1500 0021 1

Dist	COUNTY	ROUTE	POST MILES TOTAL PROJECT	SHEET No.	TOTAL SHEETS
02	Sis	5	R57.8/R58.5	14	106

REGISTERED CIVIL ENGINEER DATE 06-10-16

PLANS APPROVAL DATE 06-15-16

REGISTERED PROFESSIONAL ENGINEER KEN HALLIS No. C38203 Exp. 3-31-17 STATE OF CALIFORNIA

THE STATE OF CALIFORNIA OR ITS OFFICERS OR AGENTS SHALL NOT BE RESPONSIBLE FOR THE ACCURACY OR COMPLETENESS OF ELECTRONIC COPIES OF THIS PLAN SHEET.

NOTES:

1. EXACT SIGN LOCATIONS TO BE DETERMINED BY THE ENGINEER.
2. EXISTING UTILITY FACILITIES HAVE NOT BEEN POSITIVELY LOCATED.
3. SIGNS SHOWN WITH (CA) INDICATE CALIFORNIA SIGN CODES, OTHERWISE FEDERAL SIGN CODES ARE SHOWN.

CONSTRUCTION AREA SIGNS (STATIONARY MOUNTED)

TYPE	CODE	PANEL SIZE	SIGN MESSAGE	NUMBER AND SIZE OF POSTS	No. OF SIGNS
A	C11(CA) C23B(CA)	90" x 48" 54" x 24"	ROAD CONSTRUCTION NEXT 3 MILES BRIDGE MAINTENANCE	2-4" x 6"	4
B	W20-1 C23B(CA)	48" x 48" 54" x 24"	ROAD WORK AHEAD BRIDGE MAINTENANCE	1-4" x 6"	3
C	C14(CA)	48" x 24"	END ROAD WORK	1-4" x 6"	6
D	C40(CA)	108" x 42"	TRAFFIC FINES DOUBLED IN CONSTRUCTION ZONES	2-4" x 6"	2

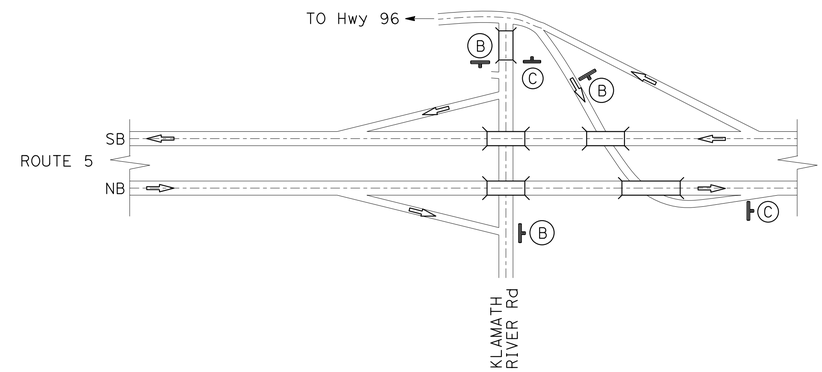

DETAIL A
ON-RAMP AND OFF-RAMP CONSTRUCTION AREA SIGN LOCATIONS

KLAMATH RIVER ROAD UC - PM 58.11

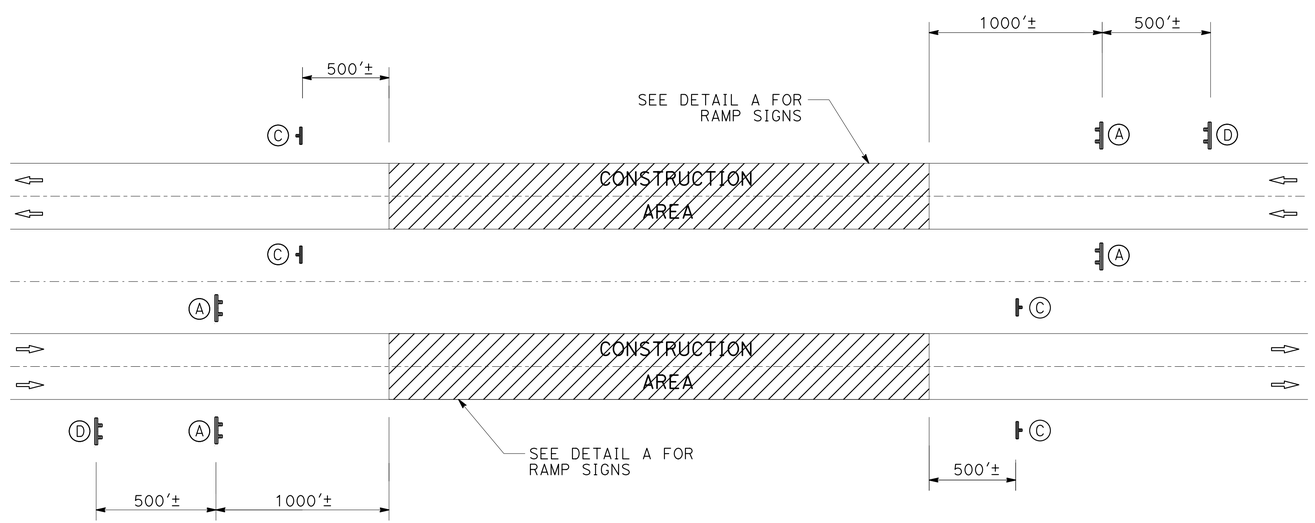

CONSTRUCTION AREA SIGNS

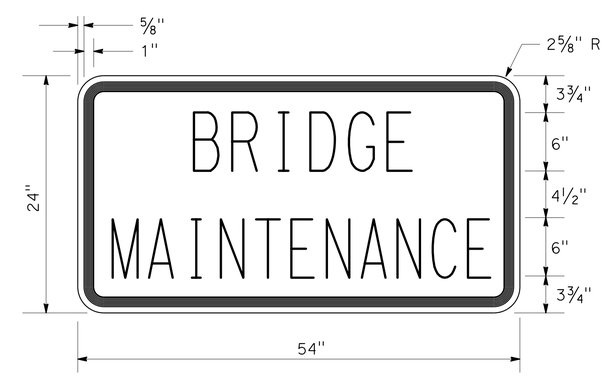

C23B(CA) SIGN PANEL DETAIL

CONSTRUCTION AREA SIGNS

NO SCALE

CS-1

REVISED BY | DATE REVISED

DAN BROWN | KEN HALLIS

CALCULATED-DESIGNED BY | CHECKED BY

FUNCTIONAL SUPERVISOR: ERIC ORR

STATE OF CALIFORNIA - DEPARTMENT OF TRANSPORTATION

Caltrans DESIGN

P:\proj1\02\4F58u_plans\pse\24f58ula001.dgn

LAST REVISION 04-11-16 | DATE PLOTTED => 21-JUN-2016 | TIME PLOTTED => 13:50

Dist	COUNTY	ROUTE	POST MILES TOTAL PROJECT	SHEET No.	TOTAL SHEETS
02	Sis	5	R57.8/R58.5	15	106

KEN HALLIS 06-10-16
REGISTERED CIVIL ENGINEER DATE

06-15-16
PLANS APPROVAL DATE

REGISTERED PROFESSIONAL ENGINEER KEN HALLIS No. C38203 Exp. 3-31-17 STATE OF CALIFORNIA

THE STATE OF CALIFORNIA OR ITS OFFICERS OR AGENTS SHALL NOT BE RESPONSIBLE FOR THE ACCURACY OR COMPLETENESS OF ELECTRONIC COPIES OF THIS PLAN SHEET.

NOTE:

1. FOR ACCURATE RIGHT OF WAY DATA, CONTACT RIGHT OF WAY ENGINEERING AT THE DISTRICT OFFICE.

STAGE 1 CONSTRUCTION NOTES:

1. PLACE TEMPORARY RAILING (TYPE K)
2. PLACE TEMPORARY STRIPING, PAVEMENT MARKINGS AND CHANNELIZERS
3. CONSTRUCT OUTSIDE BRIDGE RAILS, BARRIER SLAB, APPROACH SLABS AND GUARD RAILING
4. NOVEMBER 1st, REMOVE ALL TEMPORARY STAGE CONSTRUCTION STRIPING, TEMPORARY RAILING (TYPE K) AND PLACE TEMPORARY STRIPING IN ORIGINAL LOCATION.

LEGEND:

CONSTRUCTION AREA (STAGE 1)

CONSTRUCTION AREA (STAGE 2)

TEMPORARY PAVEMENT MARKING (PAINT) (TYPE VI ARROW)

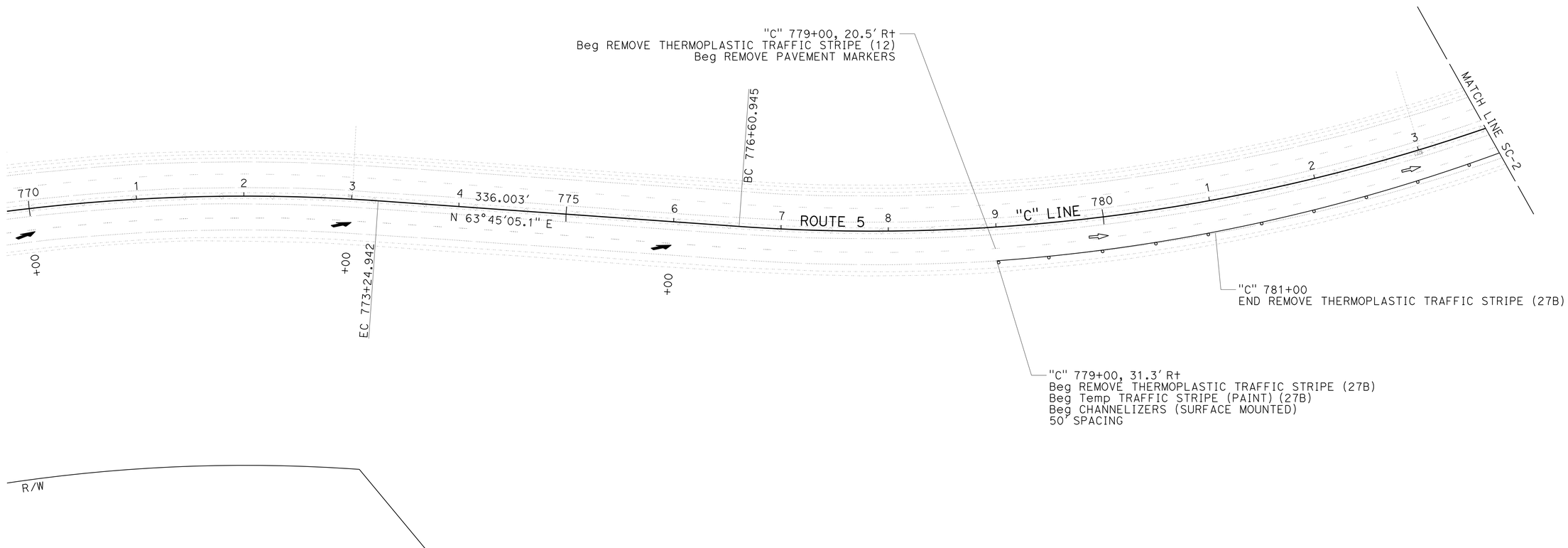

APPROVED FOR STAGE CONSTRUCTION WORK ONLY

STAGE 1
STAGE CONSTRUCTION

SCALE: 1" = 50'

SC-1

STATE OF CALIFORNIA - DEPARTMENT OF TRANSPORTATION
Caltrans **DESIGN**

FUNCTIONAL SUPERVISOR: ERIC ORR
CALCULATED-DESIGNED BY: DAN BROWN
CHECKED BY: KEN HALLIS
REVISED BY
DATE REVISED

P:\proj1\02\4f58u_plans\pse\24f58uma001.dgn

LAST REVISION 04-11-16
DATE PLOTTED => 21-JUN-2016
TIME PLOTTED => 13:50

BORDER LAST REVISED 7/2/2010
USERNAME => S123119
DGN FILE => 24f58uma001.dgn
RELATIVE BORDER SCALE IS IN INCHES 0 1 2 3
UNIT 0316
PROJECT NUMBER & PHASE 02 1500 0021 1

Dist	COUNTY	ROUTE	POST MILES TOTAL PROJECT	SHEET No.	TOTAL SHEETS
02	Sis	5	R57.8/R58.5	16	106

KEN HALLIS 06-10-16
REGISTERED CIVIL ENGINEER DATE

06-15-16
PLANS APPROVAL DATE

REGISTERED PROFESSIONAL ENGINEER
KEN HALLIS
No. C38203
Exp. 3-31-17
STATE OF CALIFORNIA

THE STATE OF CALIFORNIA OR ITS OFFICERS OR AGENTS SHALL NOT BE RESPONSIBLE FOR THE ACCURACY OR COMPLETENESS OF ELECTRONIC COPIES OF THIS PLAN SHEET.

NOTE:

1. FOR ACCURATE RIGHT OF WAY DATA, CONTACT RIGHT OF WAY ENGINEERING AT THE DISTRICT OFFICE.

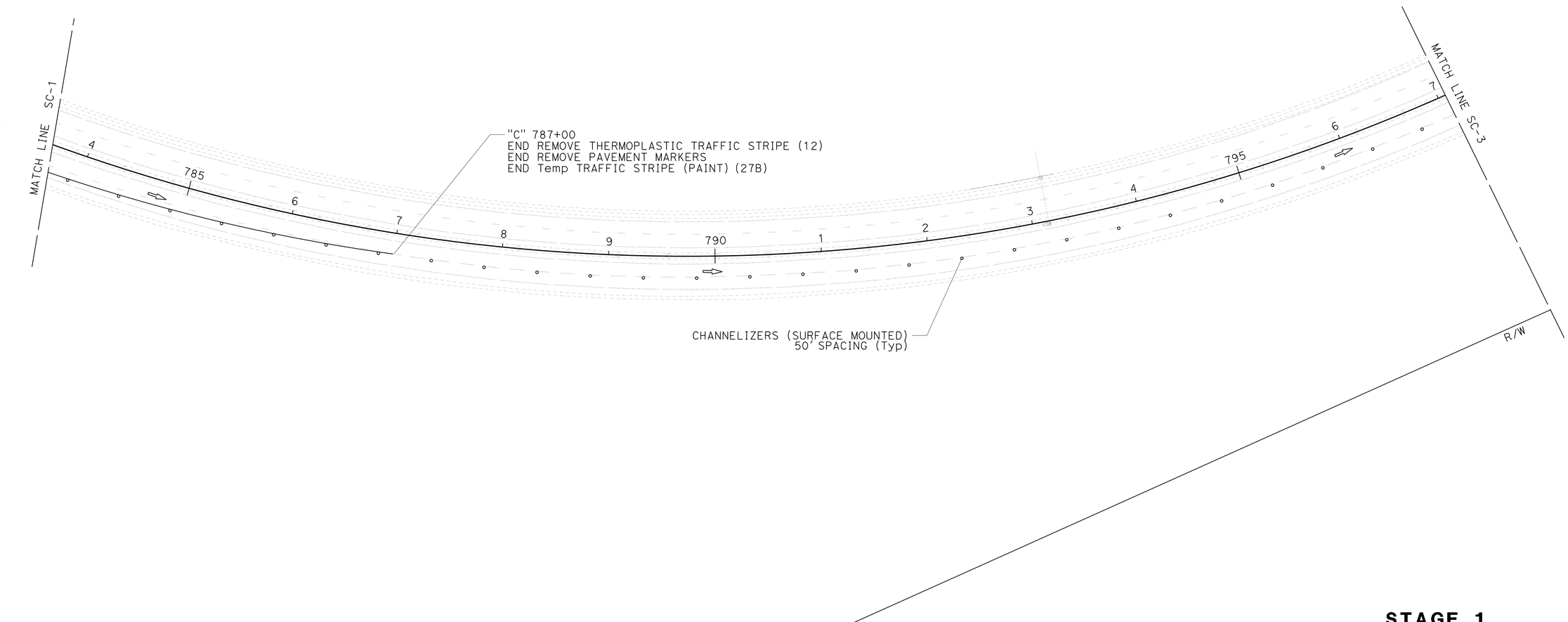

APPROVED FOR STAGE CONSTRUCTION WORK ONLY

STAGE 1

STAGE CONSTRUCTION

SCALE: 1" = 50'

SC-2

REVISED BY	DATE REVISED

CALCULATED-DESIGNED BY: DAN BROWN
CHECKED BY: KEN HALLIS
FUNCTIONAL SUPERVISOR: ERIC ORR

STATE OF CALIFORNIA - DEPARTMENT OF TRANSPORTATION
Caltrans **DESIGN**

P:\proj1\02\4f58u_plans\pse\24f58uma002.dgn

LAST REVISION 04-11-16 | DATE PLOTTED => 21-JUN-2016 | TIME PLOTTED => 13:50

Dist	COUNTY	ROUTE	POST MILES TOTAL PROJECT	SHEET No.	TOTAL SHEETS
02	Sis	5	R57.8/R58.5	17	106

REGISTERED CIVIL ENGINEER DATE 06-10-16

PLANS APPROVAL DATE 06-15-16

REGISTERED PROFESSIONAL ENGINEER KEN HALLIS No. C38203 Exp. 3-31-17 STATE OF CALIFORNIA

THE STATE OF CALIFORNIA OR ITS OFFICERS OR AGENTS SHALL NOT BE RESPONSIBLE FOR THE ACCURACY OR COMPLETENESS OF ELECTRONIC COPIES OF THIS PLAN SHEET.

NOTE:

1. FOR ACCURATE RIGHT OF WAY DATA, CONTACT RIGHT OF WAY ENGINEERING AT THE DISTRICT OFFICE.

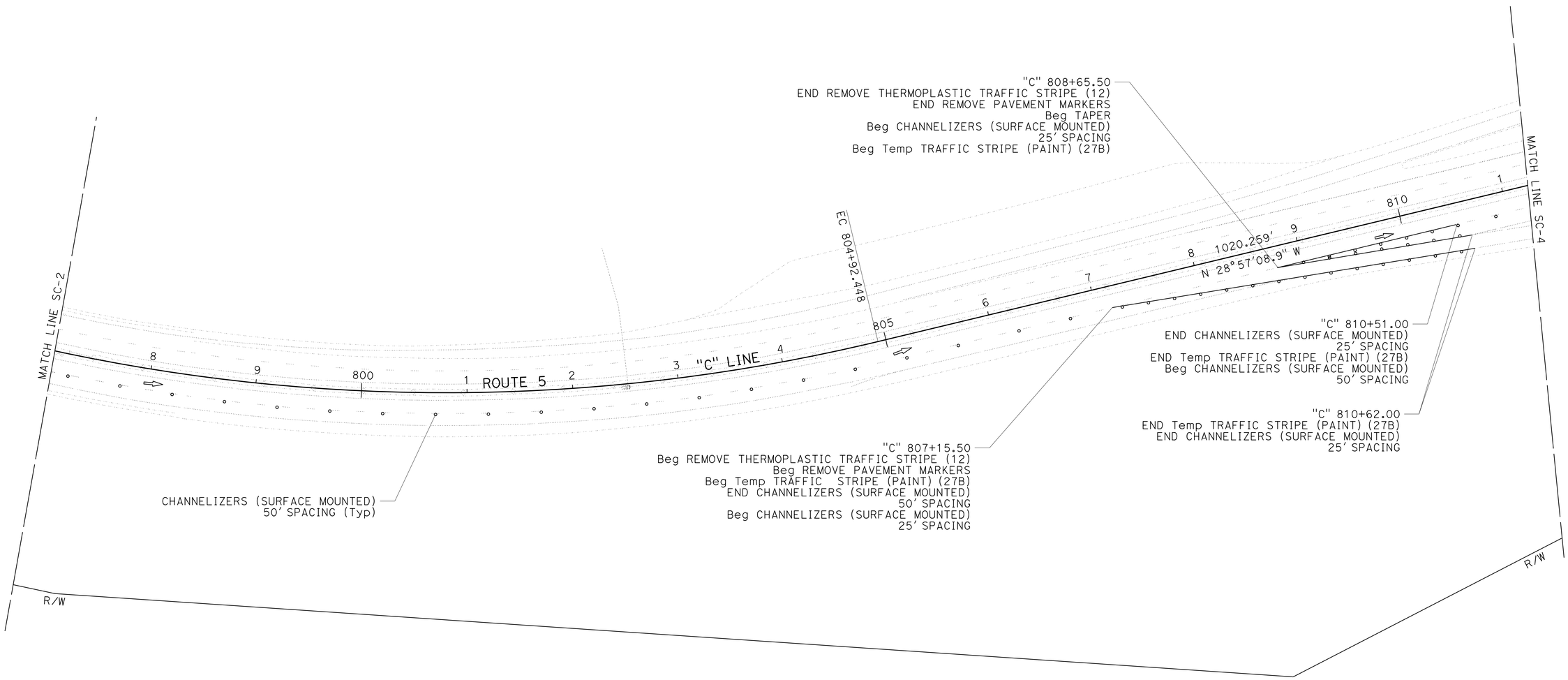

STAGE 1

STAGE CONSTRUCTION

SCALE: 1" = 50'

SC-3

APPROVED FOR STAGE CONSTRUCTION WORK ONLY

REVISED BY	DATE REVISED

CALCULATED-DESIGNED BY: DAN BROWN
CHECKED BY: KEN HALLIS
FUNCTIONAL SUPERVISOR: ERIC ORR

STATE OF CALIFORNIA - DEPARTMENT OF TRANSPORTATION
Caltrans **DESIGN**

P:\proj1\02\4F58u_plans\pse\24f58uma003.dgn

LAST REVISION 04-11-16 | DATE PLOTTED => 21-JUN-2016 | TIME PLOTTED => 13:50

Dist	COUNTY	ROUTE	POST MILES TOTAL PROJECT	SHEET No.	TOTAL SHEETS
02	Sis	5	R57.8/R58.5	18	106

Ken Hallis 06-10-16
REGISTERED CIVIL ENGINEER DATE

06-15-16
PLANS APPROVAL DATE

REGISTERED PROFESSIONAL ENGINEER KEN HALLIS No. C38203 Exp. 3-31-17 STATE OF CALIFORNIA

THE STATE OF CALIFORNIA OR ITS OFFICERS OR AGENTS SHALL NOT BE RESPONSIBLE FOR THE ACCURACY OR COMPLETENESS OF ELECTRONIC COPIES OF THIS PLAN SHEET.

NOTE:

1. FOR ACCURATE RIGHT OF WAY DATA, CONTACT RIGHT OF WAY ENGINEERING AT THE DISTRICT OFFICE.

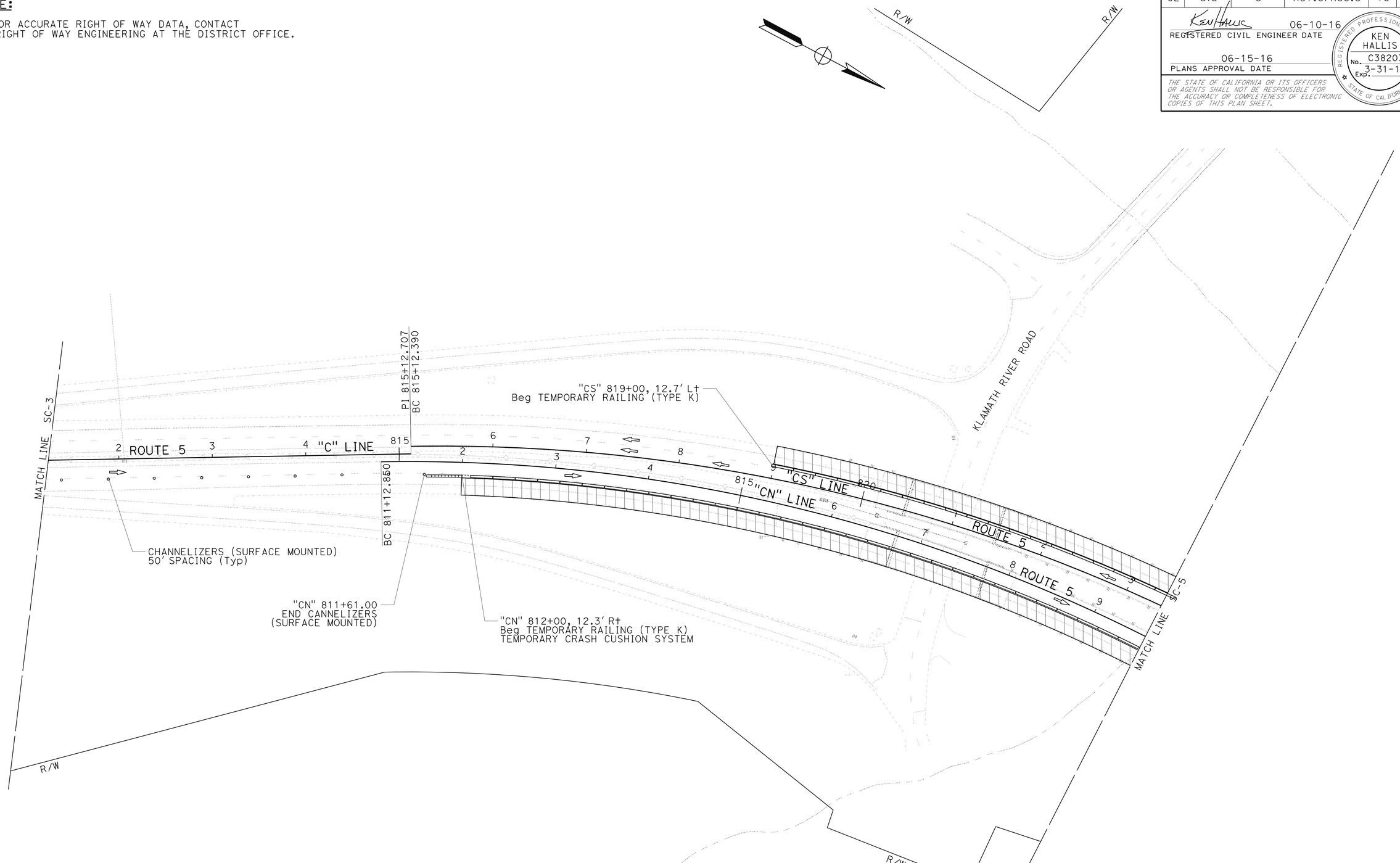

APPROVED FOR STAGE CONSTRUCTION WORK ONLY

STAGE 1

STAGE CONSTRUCTION

SCALE: 1" = 50'

SC-4

REVISED BY | DATE REVISED

DAN BROWN | KEN HALLIS

CALCULATED-DESIGNED BY | CHECKED BY

FUNCTIONAL SUPERVISOR: ERIC ORR

STATE OF CALIFORNIA - DEPARTMENT OF TRANSPORTATION

Caltrans **DESIGN**

P:\proj\02\4f58u_plans\pse\24f58uma004.dgn

LAST REVISION 04-11-16 | DATE PLOTTED => 21-JUN-2016 | TIME PLOTTED => 13:50

Dist	COUNTY	ROUTE	POST MILES TOTAL PROJECT	SHEET No.	TOTAL SHEETS
02	Sis	5	R57.8/R58.5	19	106

Ken Hallis 06-10-16
REGISTERED CIVIL ENGINEER DATE

06-15-16
PLANS APPROVAL DATE

REGISTERED PROFESSIONAL ENGINEER KEN HALLIS No. C38203 Exp. 3-31-17 STATE OF CALIFORNIA

THE STATE OF CALIFORNIA OR ITS OFFICERS OR AGENTS SHALL NOT BE RESPONSIBLE FOR THE ACCURACY OR COMPLETENESS OF ELECTRONIC COPIES OF THIS PLAN SHEET.

NOTE:

1. FOR ACCURATE RIGHT OF WAY DATA, CONTACT RIGHT OF WAY ENGINEERING AT THE DISTRICT OFFICE.

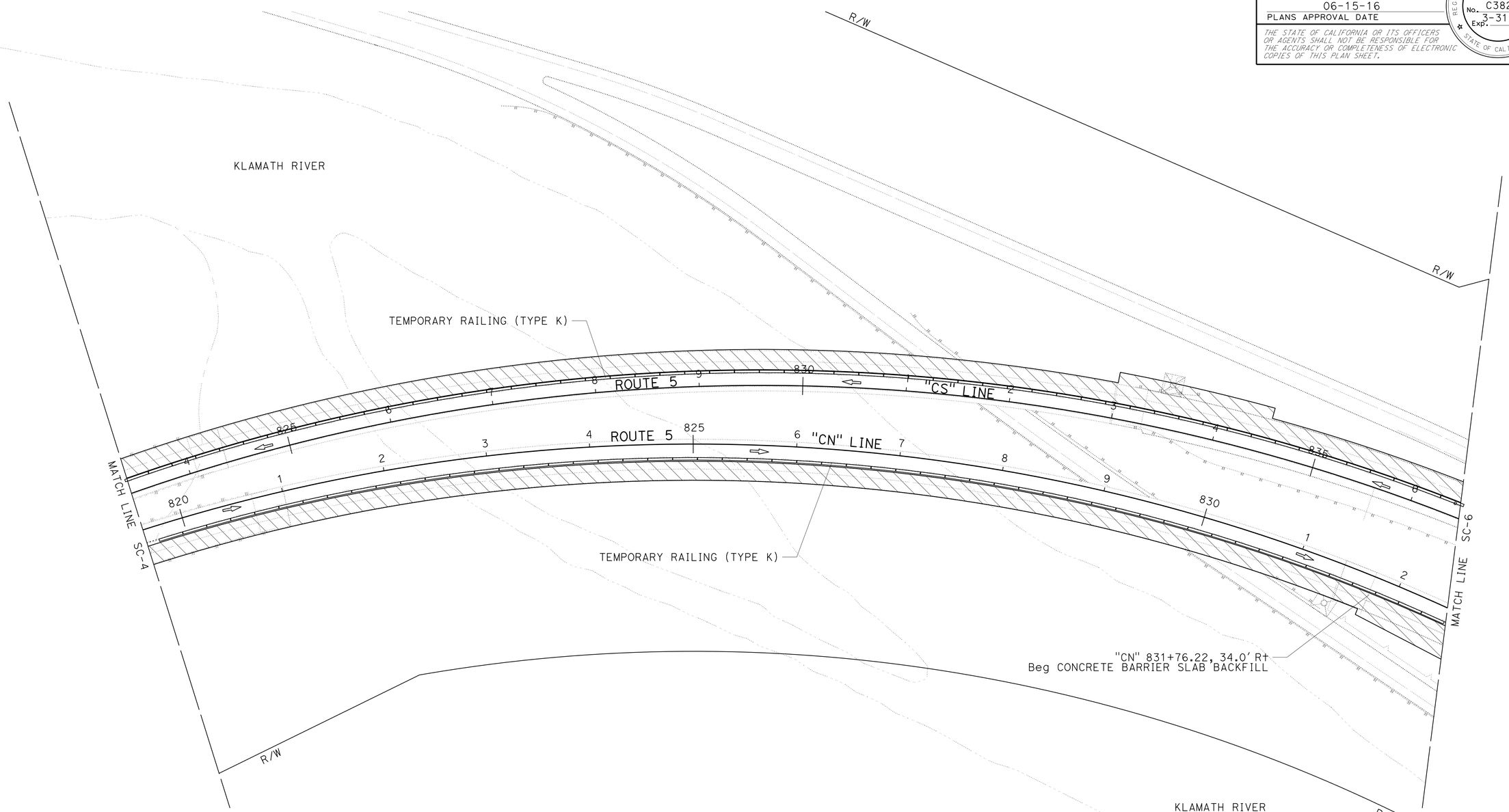

STAGE 1

STAGE CONSTRUCTION

SCALE: 1" = 50'

SC-5

APPROVED FOR STAGE CONSTRUCTION WORK ONLY

REVISED BY	DATE REVISED

CALCULATED-DESIGNED BY: DAN BROWN
CHECKED BY: KEN HALLIS
FUNCTIONAL SUPERVISOR: ERIC ORR

STATE OF CALIFORNIA - DEPARTMENT OF TRANSPORTATION
Caltrans **DESIGN**

P:\proj1\02\4F58u_plans\pse\24f58uma005.dgn

LAST REVISION 04-11-16 | DATE PLOTTED => 21-JUN-2016 TIME PLOTTED => 13:50

Dist	COUNTY	ROUTE	POST MILES TOTAL PROJECT	SHEET No.	TOTAL SHEETS
02	Sis	5	R57.8/R58.5	20	106

REGISTERED CIVIL ENGINEER DATE 06-10-16

PLANS APPROVAL DATE 06-15-16

REGISTERED PROFESSIONAL ENGINEER KEN HALLIS No. C38203 Exp. 3-31-17 STATE OF CALIFORNIA

THE STATE OF CALIFORNIA OR ITS OFFICERS OR AGENTS SHALL NOT BE RESPONSIBLE FOR THE ACCURACY OR COMPLETENESS OF ELECTRONIC COPIES OF THIS PLAN SHEET.

NOTE:

1. FOR ACCURATE RIGHT OF WAY DATA, CONTACT RIGHT OF WAY ENGINEERING AT THE DISTRICT OFFICE.

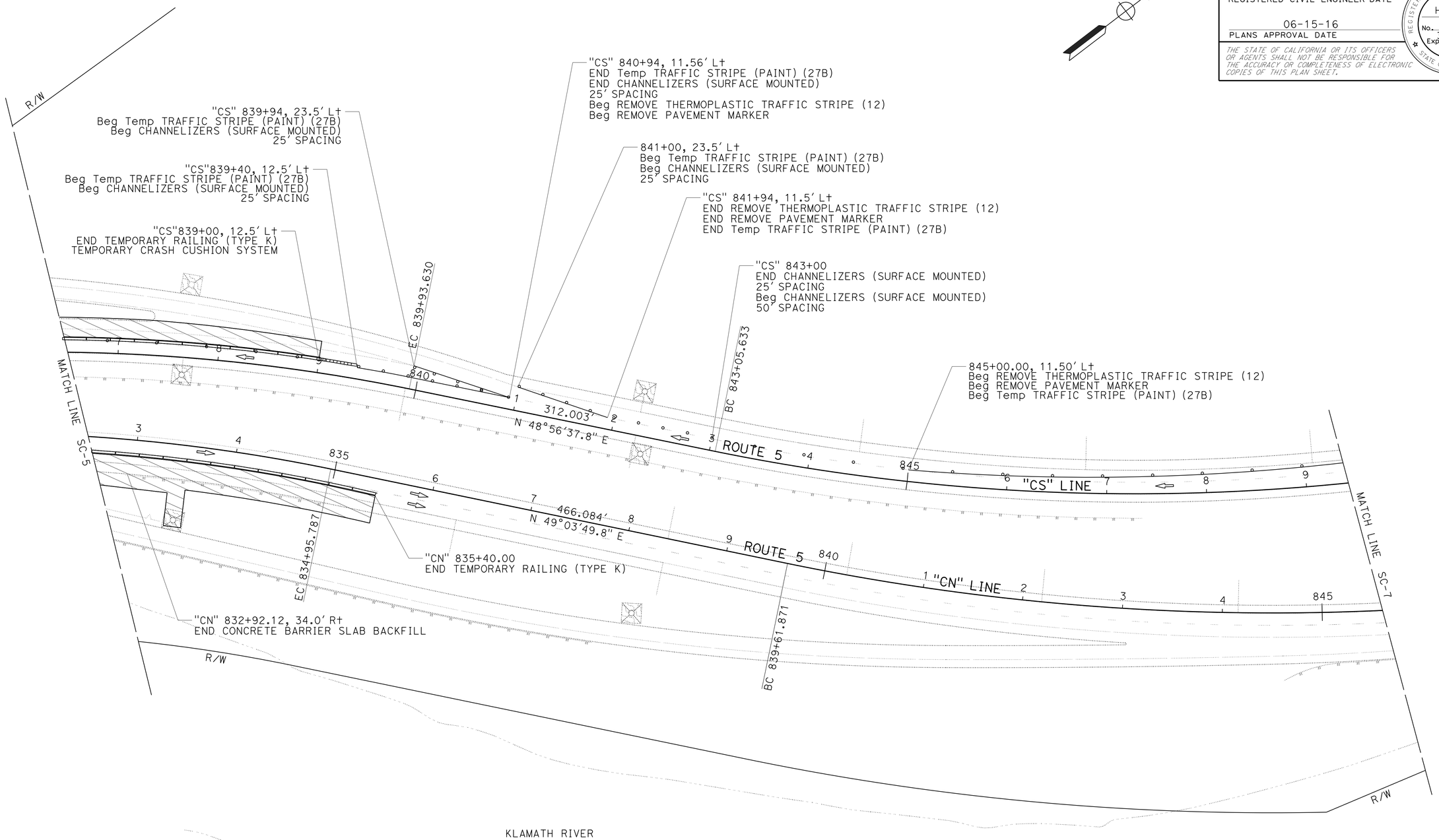

APPROVED FOR STAGE CONSTRUCTION WORK ONLY

STAGE 1

STAGE CONSTRUCTION

SCALE: 1" = 50'

SC-6

REVISED BY	DATE REVISED
DAN BROWN	KEN HALLIS

CALCULATED-DESIGNED BY / CHECKED BY

FUNCTIONAL SUPERVISOR: ERIC ORR

STATE OF CALIFORNIA - DEPARTMENT OF TRANSPORTATION

Caltrans **DESIGN**

P:\proj1\02\4F58u_plans\pse\24f58uma006.dgn

LAST REVISION 04-11-16 | DATE PLOTTED => 21-JUN-2016 | TIME PLOTTED => 13:50

Dist	COUNTY	ROUTE	POST MILES TOTAL PROJECT	SHEET No.	TOTAL SHEETS
02	Sis	5	R57.8/R58.5	21	106

REGISTERED CIVIL ENGINEER DATE 06-10-16

PLANS APPROVAL DATE 06-15-16

REGISTERED PROFESSIONAL ENGINEER KEN HALLIS No. C38203 Exp. 3-31-17 STATE OF CALIFORNIA

THE STATE OF CALIFORNIA OR ITS OFFICERS OR AGENTS SHALL NOT BE RESPONSIBLE FOR THE ACCURACY OR COMPLETENESS OF ELECTRONIC COPIES OF THIS PLAN SHEET.

NOTE:

1. FOR ACCURATE RIGHT OF WAY DATA, CONTACT RIGHT OF WAY ENGINEERING AT THE DISTRICT OFFICE.

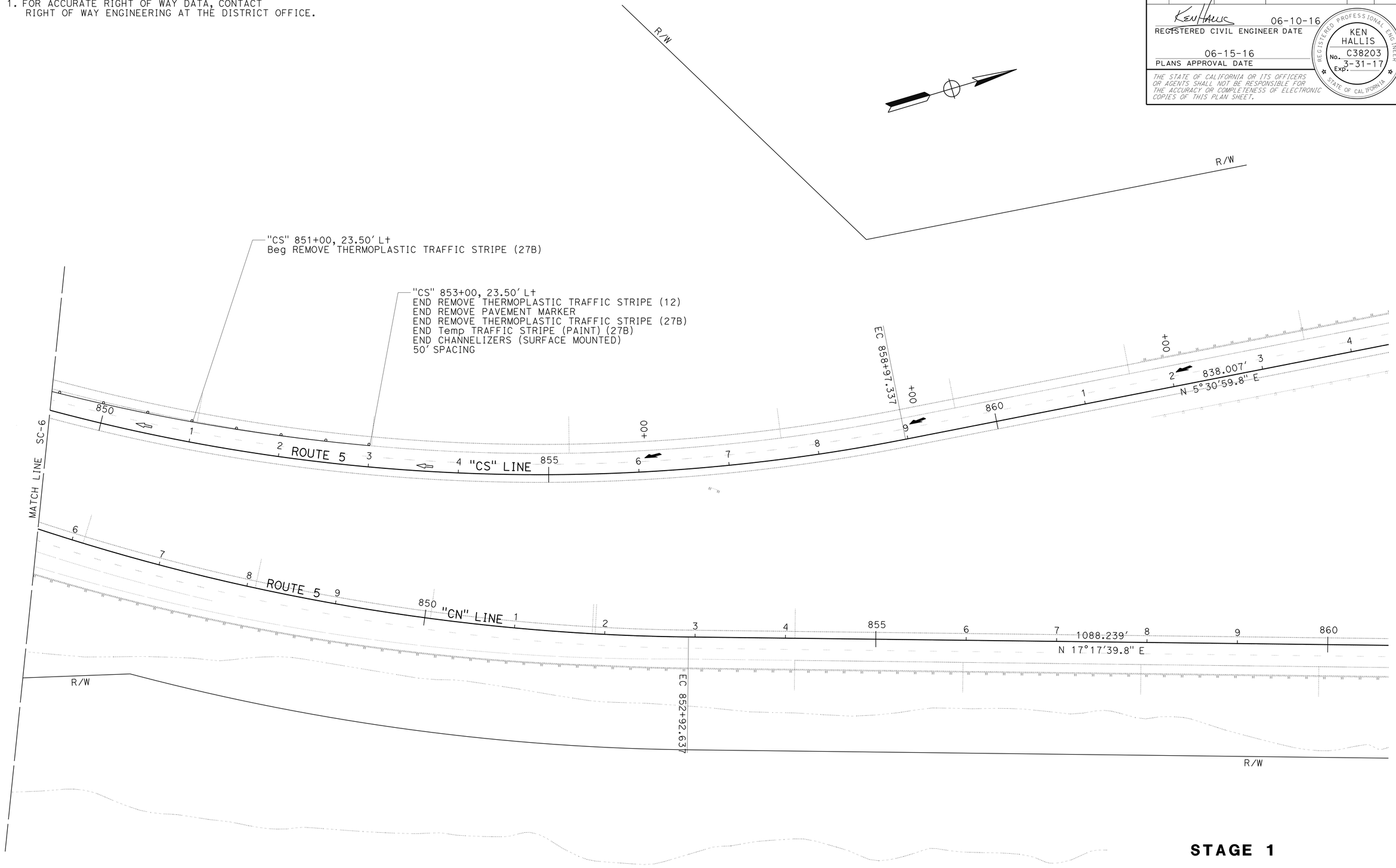

STAGE 1

STAGE CONSTRUCTION

SCALE: 1" = 50'

SC-7

APPROVED FOR STAGE CONSTRUCTION WORK ONLY

STATE OF CALIFORNIA - DEPARTMENT OF TRANSPORTATION

Caltrans **DESIGN**

FUNCTIONAL SUPERVISOR: ERIC ORR

CALCULATED-DESIGNED BY: DAN BROWN

CHECKED BY: KEN HALLIS

REVISED BY

DATE REVISED

P:\proj1\02\4F58u_plans\pse\24f58uma007.dgn

LAST REVISION 04-11-16 | DATE PLOTTED => 21-JUN-2016 | TIME PLOTTED => 13:50

BORDER LAST REVISED 7/2/2010 | USERNAME => S123119 | DGN FILE => 24f58uma007.dgn | RELATIVE BORDER SCALE IS IN INCHES 0 1 2 3 | UNIT 0316 | PROJECT NUMBER & PHASE 02 1500 0021 1

Dist	COUNTY	ROUTE	POST MILES TOTAL PROJECT	SHEET No.	TOTAL SHEETS
02	Sis	5	R57.8/R58.5	22	106

KEN HALLIS 06-10-16
REGISTERED CIVIL ENGINEER DATE

06-15-16
PLANS APPROVAL DATE

REGISTERED PROFESSIONAL ENGINEER
KEN HALLIS
No. C38203
Exp. 3-31-17
STATE OF CALIFORNIA

THE STATE OF CALIFORNIA OR ITS OFFICERS OR AGENTS SHALL NOT BE RESPONSIBLE FOR THE ACCURACY OR COMPLETENESS OF ELECTRONIC COPIES OF THIS PLAN SHEET.

NOTE:

1. FOR ACCURATE RIGHT OF WAY DATA, CONTACT RIGHT OF WAY ENGINEERING AT THE DISTRICT OFFICE.

STAGE 2 CONSTRUCTION NOTES:

1. PLACE TEMPORARY RAILING (TYPE K)
2. PLACE TEMPORARY STRIPING, PAVEMENT MARKINGS AND CHANNELIZERS
3. CONSTRUCT INSIDE BARRIER RAIL, APPROACH SLABS AND GUARD RAILING
4. PLACE RUMBLE STRIP PATCH (CONCRETE)
5. COLD PLACE ASPHALT CONCRETE PAVEMENT (RUMBLE STRIP REMOVAL)

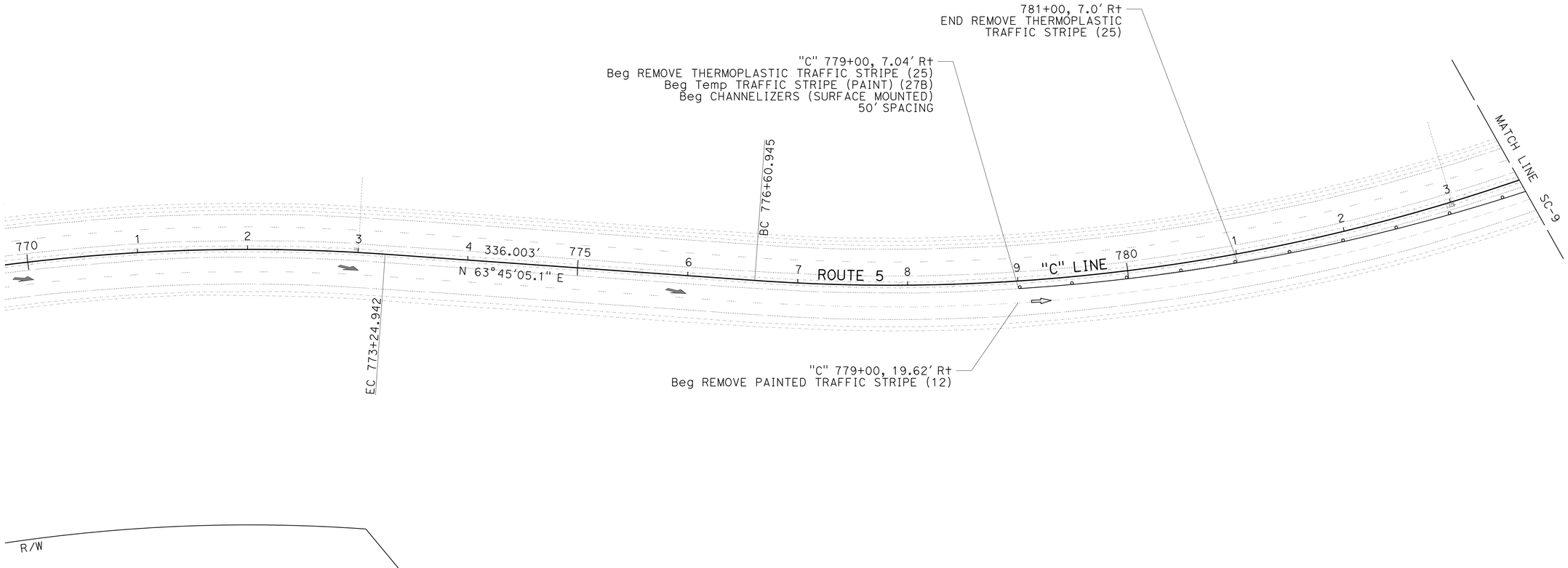

APPROVED FOR STAGE CONSTRUCTION WORK ONLY

STAGE 2
TRAFFIC HANDLING AND STAGE CONSTRUCTION

SCALE: 1" = 50'

SC-8

REVISED BY | DATE REVISED
DAN BROWN | KEN HALLIS
CALCULATED-DESIGNED BY | CHECKED BY
FUNCTIONAL SUPERVISOR: ERIC ORR

STATE OF CALIFORNIA - DEPARTMENT OF TRANSPORTATION
Caltrans **DESIGN**

P:\proj1\02\4f58u_plans\pse\24f58uma008.dgn

LAST REVISION 04-11-16 | DATE PLOTTED => 21-JUN-2016 | TIME PLOTTED => 13:51

BORDER LAST REVISED 7/2/2010 | USERNAME => S123119 | DGN FILE => 24f58uma008.dgn | RELATIVE BORDER SCALE IS IN INCHES 0 1 2 3 | UNIT 0316 | PROJECT NUMBER & PHASE 02 1500 0021 1

Dist	COUNTY	ROUTE	POST MILES TOTAL PROJECT	SHEET No.	TOTAL SHEETS
02	Sis	5	R57.8/R58.5	23	106

KEN HALLIS 06-10-16
REGISTERED CIVIL ENGINEER DATE

06-15-16
PLANS APPROVAL DATE

REGISTERED PROFESSIONAL ENGINEER
KEN HALLIS
No. C38203
Exp. 3-31-17
STATE OF CALIFORNIA

THE STATE OF CALIFORNIA OR ITS OFFICERS OR AGENTS SHALL NOT BE RESPONSIBLE FOR THE ACCURACY OR COMPLETENESS OF ELECTRONIC COPIES OF THIS PLAN SHEET.

NOTE:

1. FOR ACCURATE RIGHT OF WAY DATA, CONTACT RIGHT OF WAY ENGINEERING AT THE DISTRICT OFFICE.

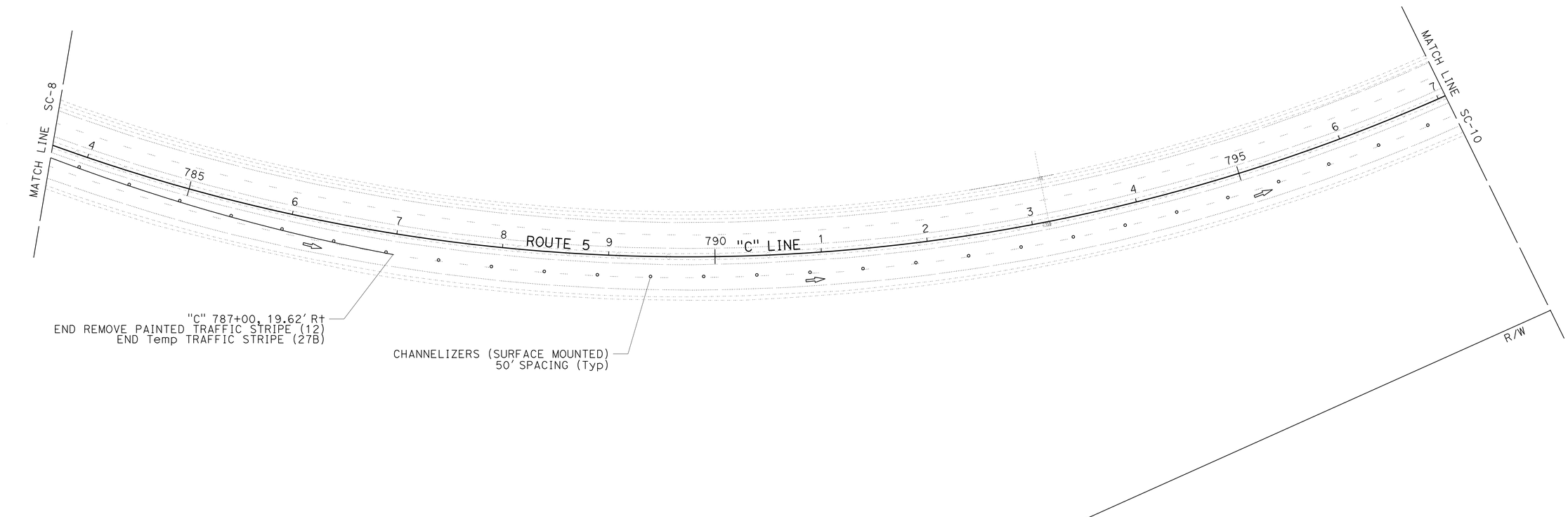

STAGE 2

STAGE CONSTRUCTION

SCALE: 1" = 50'

SC-9

APPROVED FOR STAGE CONSTRUCTION WORK ONLY

REVISED BY	DATE REVISED

CALCULATED-DESIGNED BY: DAN BROWN
CHECKED BY: KEN HALLIS
FUNCTIONAL SUPERVISOR: ERIC ORR

STATE OF CALIFORNIA - DEPARTMENT OF TRANSPORTATION
Caltrans **DESIGN**

P:\proj\02\4f58u_plans\pse\24f58uma009.dgn

LAST REVISION 04-11-16 | DATE PLOTTED => 21-JUN-2016 | TIME PLOTTED => 13:51

BORDER LAST REVISED 7/2/2010 | USERNAME => S123119 | DGN FILE => 24f58uma009.dgn | RELATIVE BORDER SCALE IS IN INCHES 0 1 2 3 | UNIT 0316 | PROJECT NUMBER & PHASE 02 1500 0021 1

Dist	COUNTY	ROUTE	POST MILES TOTAL PROJECT	SHEET No.	TOTAL SHEETS
02	Sis	5	R57.8/R58.5	24	106

KEN HALLIS 06-10-16
REGISTERED CIVIL ENGINEER DATE

06-15-16
PLANS APPROVAL DATE

REGISTERED PROFESSIONAL ENGINEER
KEN HALLIS
No. C38203
Exp. 3-31-17
STATE OF CALIFORNIA

THE STATE OF CALIFORNIA OR ITS OFFICERS OR AGENTS SHALL NOT BE RESPONSIBLE FOR THE ACCURACY OR COMPLETENESS OF ELECTRONIC COPIES OF THIS PLAN SHEET.

NOTE:

1. FOR ACCURATE RIGHT OF WAY DATA, CONTACT RIGHT OF WAY ENGINEERING AT THE DISTRICT OFFICE.

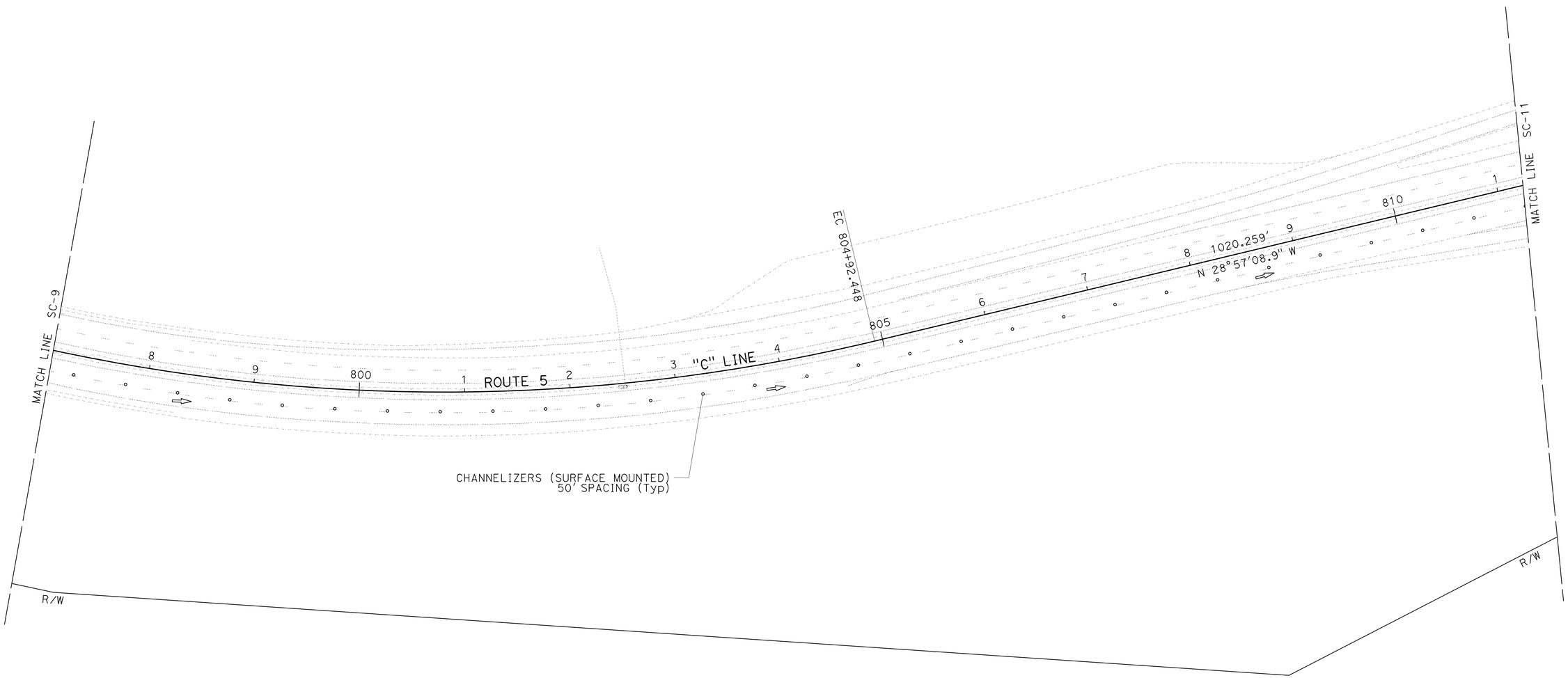

APPROVED FOR STAGE CONSTRUCTION WORK ONLY

STAGE 2

STAGE CONSTRUCTION

SCALE: 1" = 50'

SC-10

REVISED BY	DATE REVISED

CALCULATED-DESIGNED BY: DAN BROWN
CHECKED BY: KEN HALLIS
FUNCTIONAL SUPERVISOR: ERIC ORR

STATE OF CALIFORNIA - DEPARTMENT OF TRANSPORTATION
Caltrans **DESIGN**

P:\proj1\02\4f58u_plans\pse\24f58uma010.dgn

LAST REVISION 04-11-16
DATE PLOTTED => 21-JUN-2016
TIME PLOTTED => 13:51

Dist	COUNTY	ROUTE	POST MILES TOTAL PROJECT	SHEET No.	TOTAL SHEETS
02	Sis	5	R57.8/R58.5	25	106

REGISTERED CIVIL ENGINEER DATE 06-10-16

PLANS APPROVAL DATE 06-15-16

REGISTERED PROFESSIONAL ENGINEER KEN HALLIS No. C38203 Exp. 3-31-17 STATE OF CALIFORNIA

THE STATE OF CALIFORNIA OR ITS OFFICERS OR AGENTS SHALL NOT BE RESPONSIBLE FOR THE ACCURACY OR COMPLETENESS OF ELECTRONIC COPIES OF THIS PLAN SHEET.

NOTE:

1. FOR ACCURATE RIGHT OF WAY DATA, CONTACT RIGHT OF WAY ENGINEERING AT THE DISTRICT OFFICE.

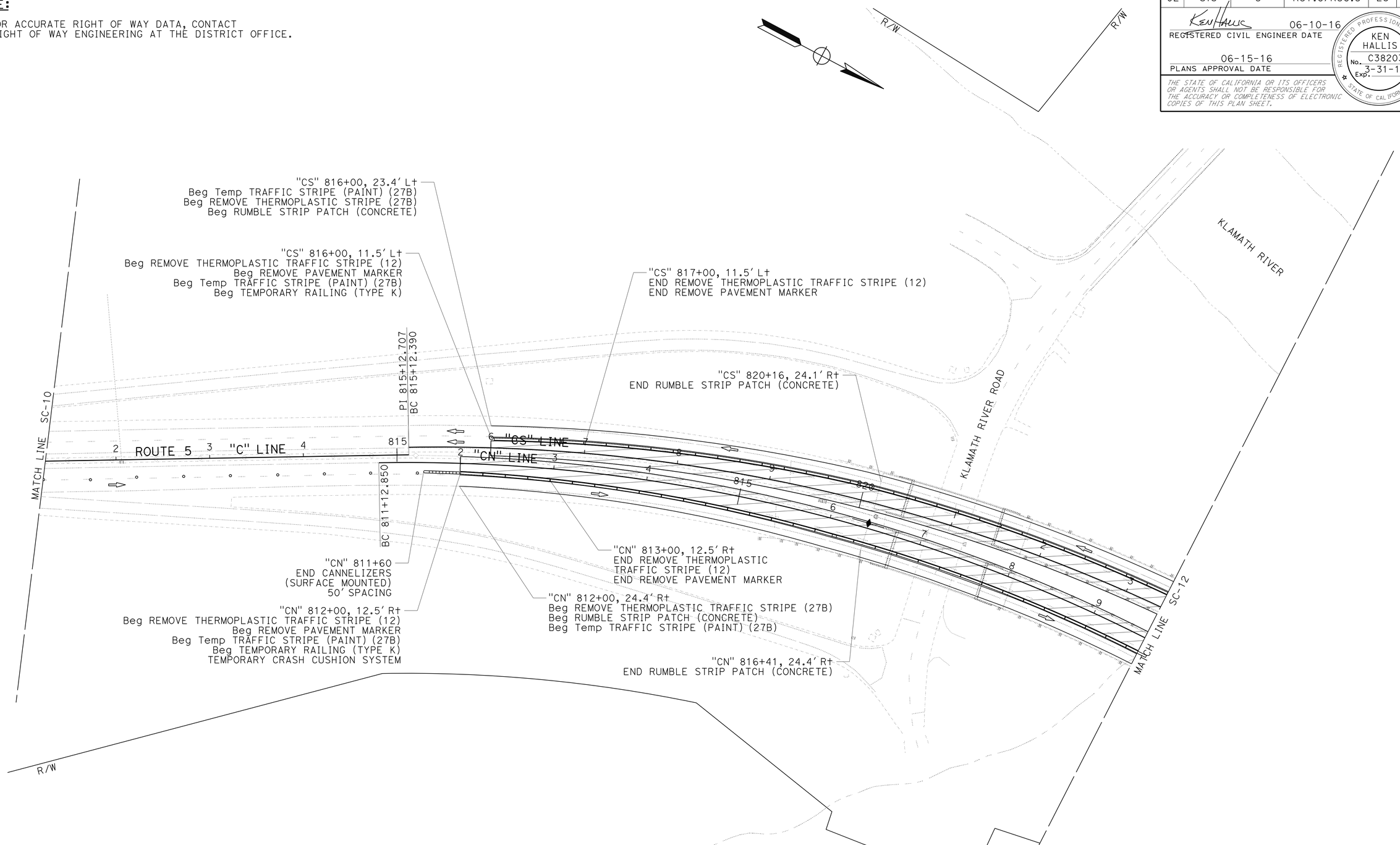

STAGE 2

STAGE CONSTRUCTION

SCALE: 1" = 50'

SC-11

APPROVED FOR STAGE CONSTRUCTION WORK ONLY

REVISED BY	DATE REVISED

CALCULATED-DESIGNED BY: DAN BROWN
CHECKED BY: KEN HALLIS
FUNCTIONAL SUPERVISOR: ERIC ORR

STATE OF CALIFORNIA - DEPARTMENT OF TRANSPORTATION
Caltrans **DESIGN**

P:\proj1\02\4F58u_plans\pse\24f58uma011.dgn

LAST REVISION 04-11-16 | DATE PLOTTED => 21-JUN-2016 | TIME PLOTTED => 13:51

Dist	COUNTY	ROUTE	POST MILES TOTAL PROJECT	SHEET No.	TOTAL SHEETS
02	Sis	5	R57.8/R58.5	26	106

Ken Hallis 06-10-16
REGISTERED CIVIL ENGINEER DATE

06-15-16
PLANS APPROVAL DATE

REGISTERED PROFESSIONAL ENGINEER KEN HALLIS No. C38203 Exp. 3-31-17 STATE OF CALIFORNIA

THE STATE OF CALIFORNIA OR ITS OFFICERS OR AGENTS SHALL NOT BE RESPONSIBLE FOR THE ACCURACY OR COMPLETENESS OF ELECTRONIC COPIES OF THIS PLAN SHEET.

NOTE:

1. FOR ACCURATE RIGHT OF WAY DATA, CONTACT RIGHT OF WAY ENGINEERING AT THE DISTRICT OFFICE.

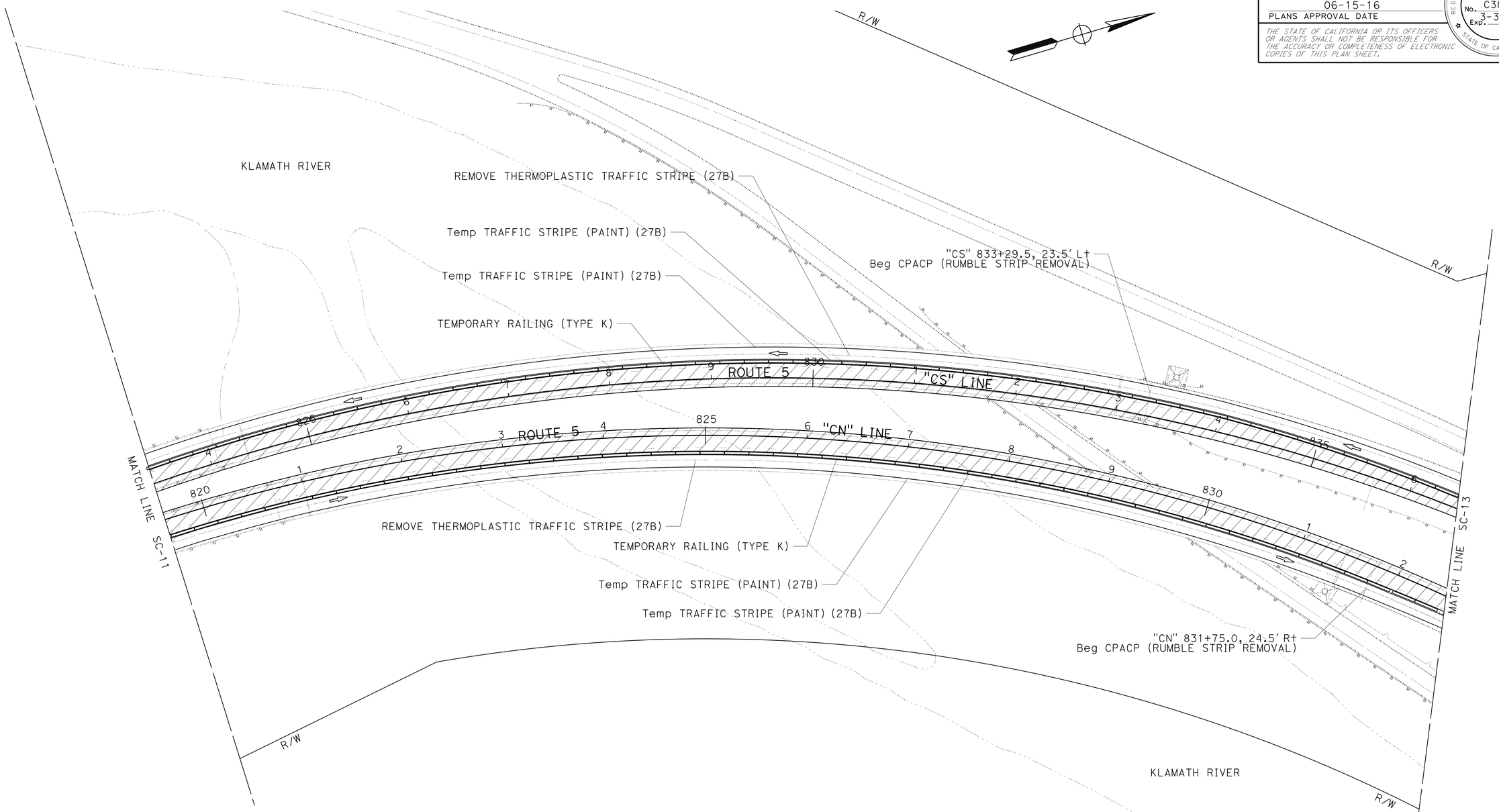

STAGE 2

STAGE CONSTRUCTION

SCALE: 1" = 50'

SC-12

APPROVED FOR STAGE CONSTRUCTION WORK ONLY

REVISED BY	DATE REVISED
DAN BROWN	KEN HALLIS

CALCULATED-DESIGNED BY
CHECKED BY

FUNCTIONAL SUPERVISOR: ERIC ORR

STATE OF CALIFORNIA - DEPARTMENT OF TRANSPORTATION
Caltrans **DESIGN**

P:\proj1\02\4F58u_plans\pse\24f58uma012.dgn

LAST REVISION 04-11-16 | DATE PLOTTED => 21-JUN-2016 | TIME PLOTTED => 13:51

Dist	COUNTY	ROUTE	POST MILES TOTAL PROJECT	SHEET No.	TOTAL SHEETS
02	Sis	5	R57.8/R58.5	27	106

REGISTERED CIVIL ENGINEER DATE 06-10-16

PLANS APPROVAL DATE 06-15-16

REGISTERED PROFESSIONAL ENGINEER KEN HALLIS No. C38203 Exp. 3-31-17 STATE OF CALIFORNIA

THE STATE OF CALIFORNIA OR ITS OFFICERS OR AGENTS SHALL NOT BE RESPONSIBLE FOR THE ACCURACY OR COMPLETENESS OF ELECTRONIC COPIES OF THIS PLAN SHEET.

NOTE:

1. FOR ACCURATE RIGHT OF WAY DATA, CONTACT RIGHT OF WAY ENGINEERING AT THE DISTRICT OFFICE.

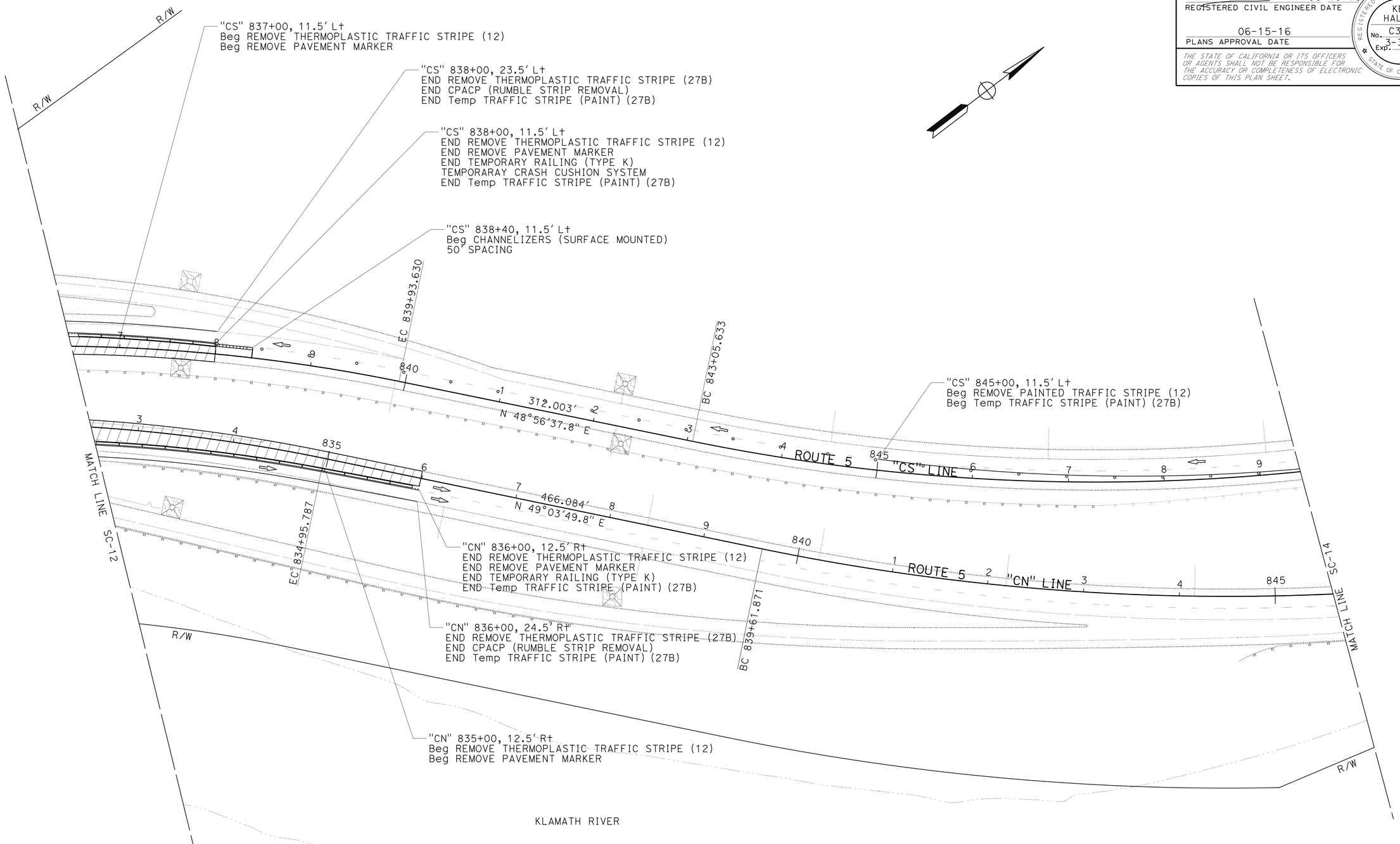

APPROVED FOR STAGE CONSTRUCTION WORK ONLY

STAGE 2

STAGE CONSTRUCTION

SCALE: 1" = 50'

SC-13

STATE OF CALIFORNIA - DEPARTMENT OF TRANSPORTATION

Caltrans **DESIGN**

FUNCTIONAL SUPERVISOR: ERIC ORR

CALCULATED-DESIGNED BY: DAN BROWN

CHECKED BY: KEN HALLIS

REVISED BY

DATE REVISED

P:\proj1\02\4f58u_plans\pse\24f58uma013.dgn

LAST REVISION 04-11-16

DATE PLOTTED => 21-JUN-2016

TIME PLOTTED => 13:51

Dist	COUNTY	ROUTE	POST MILES TOTAL PROJECT	SHEET No.	TOTAL SHEETS
02	Sis	5	R57.8/R58.5	28	106

Ken Hallis 06-10-16
REGISTERED CIVIL ENGINEER DATE

06-15-16
PLANS APPROVAL DATE

REGISTERED PROFESSIONAL ENGINEER KEN HALLIS No. C38203 Exp. 3-31-17 STATE OF CALIFORNIA

THE STATE OF CALIFORNIA OR ITS OFFICERS OR AGENTS SHALL NOT BE RESPONSIBLE FOR THE ACCURACY OR COMPLETENESS OF ELECTRONIC COPIES OF THIS PLAN SHEET.

NOTE:

1. FOR ACCURATE RIGHT OF WAY DATA, CONTACT RIGHT OF WAY ENGINEERING AT THE DISTRICT OFFICE.

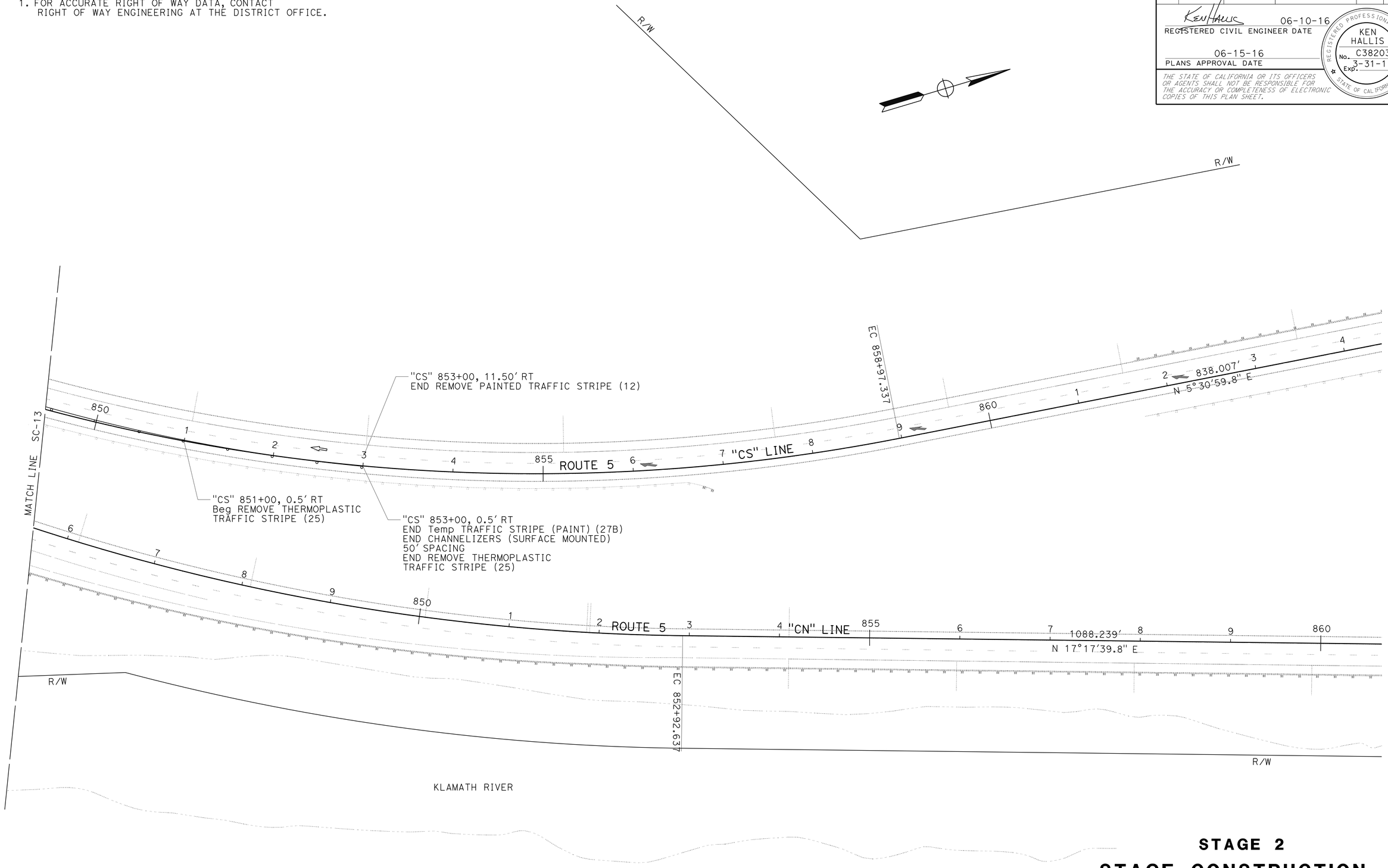

STAGE 2

STAGE CONSTRUCTION

SCALE: 1" = 50'

SC-14

APPROVED FOR STAGE CONSTRUCTION WORK ONLY

REVISED BY	DATE REVISED

CALCULATED-DESIGNED BY	CHECKED BY
DAN BROWN	KEN HALLIS

FUNCTIONAL SUPERVISOR: ERIC ORR

STATE OF CALIFORNIA - DEPARTMENT OF TRANSPORTATION
Caltrans **DESIGN**

P:\proj1\02\4F58u_plans\pse\24f58uma014.dgn

LAST REVISION 04-11-16 | DATE PLOTTED => 21-JUN-2016 | TIME PLOTTED => 13:51

Dist	COUNTY	ROUTE	POST MILES TOTAL PROJECT	SHEET No.	TOTAL SHEETS
02	Sis	5	R57.8/R58.5	29	106

Ken Hallis 06-10-16
REGISTERED CIVIL ENGINEER DATE

06-15-16
PLANS APPROVAL DATE

REGISTERED PROFESSIONAL ENGINEER KEN HALLIS No. C38203 Exp. 3-31-17 STATE OF CALIFORNIA

THE STATE OF CALIFORNIA OR ITS OFFICERS OR AGENTS SHALL NOT BE RESPONSIBLE FOR THE ACCURACY OR COMPLETENESS OF ELECTRONIC COPIES OF THIS PLAN SHEET.

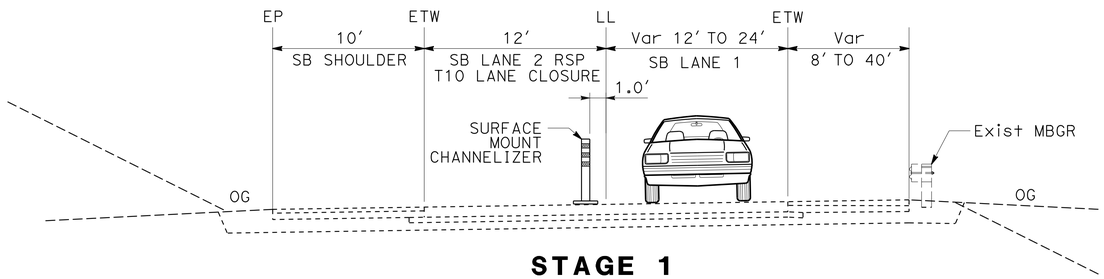

STAGE 1
TRAFFIC HANDLING
SOUTHBOUND "CS" 833+00 TO "CS" 853+00

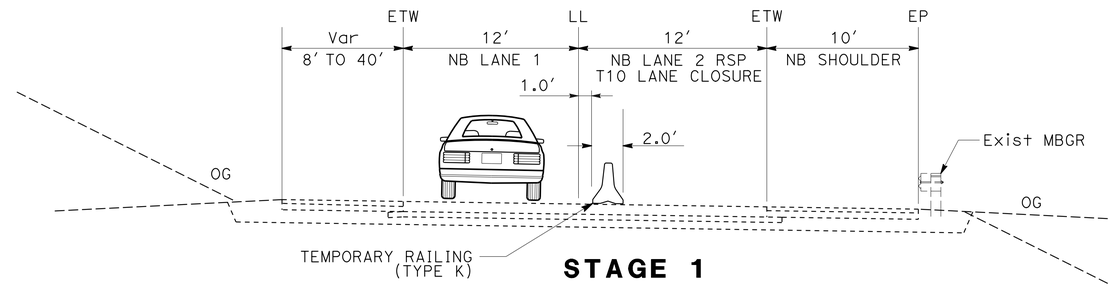

STAGE 1
TRAFFIC HANDLING
NORTHBOUND "CN" 831+50 TO "CN" 835+40

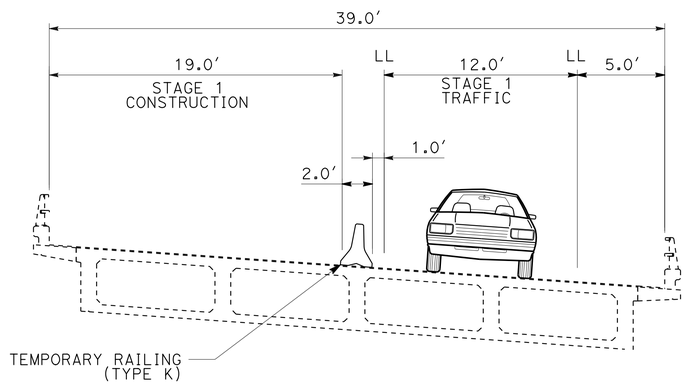

STAGE 1
TRAFFIC HANDLING
SOUTHBOUND "CS" 819+00 TO "CS" 833+00

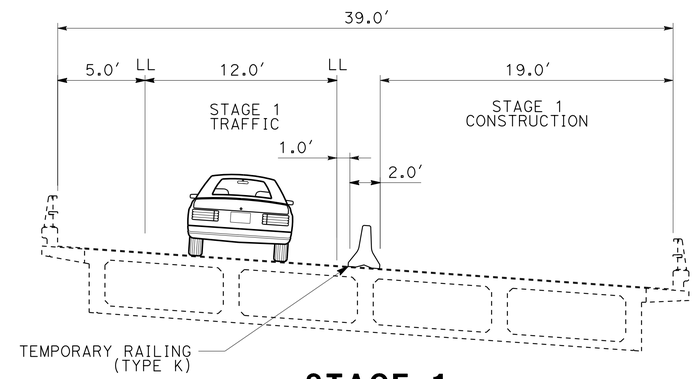

STAGE 1
TRAFFIC HANDLING
NORTHBOUND "CN" 812+00 TO "CN" 831+50

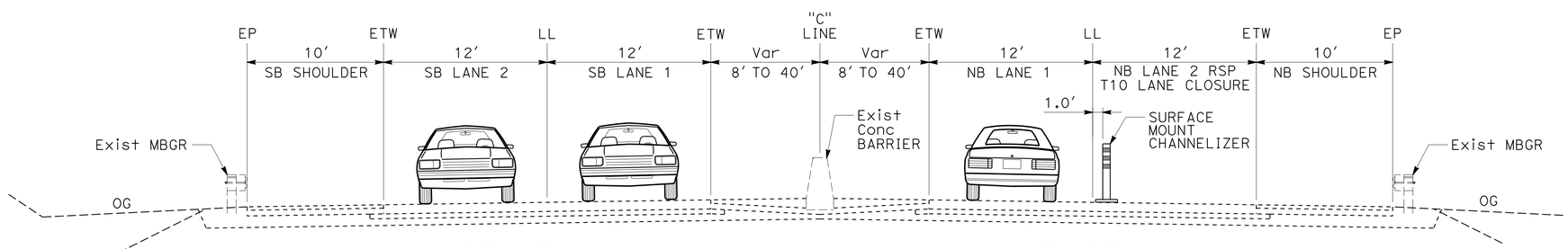

STAGE 1
TRAFFIC HANDLING
SOUTHBOUND "C" 779+00 TO "C" 815+12.70

TRAFFIC HANDLING
SOUTHBOUND "CS" 815+12.39 TO "CS" 819+00

STAGE 1
TRAFFIC HANDLING
NORTHBOUND "C" 779+00 TO "C" 815+12.707

TRAFFIC HANDLING
NORTHBOUND "CN" 811+45.09 TO "CN" 812+00

STAGE CONSTRUCTION AND TRAFFIC HANDLING PLAN

NO SCALE

SCD-1

APPROVED FOR STAGE CONSTRUCTION AND TRAFFIC HANDLING WORK ONLY

REVISED BY | DATE REVISED
DAN BROWN | KEN HALLIS
CALCULATED-DESIGNED BY | CHECKED BY
FUNCTIONAL SUPERVISOR | ERIC ORR
STATE OF CALIFORNIA - DEPARTMENT OF TRANSPORTATION
Caltrans **DESIGN**
P:\proj1\02\4F58u_plans\pse\24f58umb001.dgn

LAST REVISION 04-11-16 | DATE PLOTTED => 21-JUN-2016 | TIME PLOTTED => 13:51

Dist	COUNTY	ROUTE	POST MILES TOTAL PROJECT	SHEET No.	TOTAL SHEETS
02	Sis	5	R57.8/R58.5	30	106

Ken Hallis 06-10-16
REGISTERED CIVIL ENGINEER DATE

06-15-16
PLANS APPROVAL DATE

REGISTERED PROFESSIONAL ENGINEER KEN HALLIS No. C38203 Exp. 3-31-17 STATE OF CALIFORNIA

THE STATE OF CALIFORNIA OR ITS OFFICERS OR AGENTS SHALL NOT BE RESPONSIBLE FOR THE ACCURACY OR COMPLETENESS OF ELECTRONIC COPIES OF THIS PLAN SHEET.

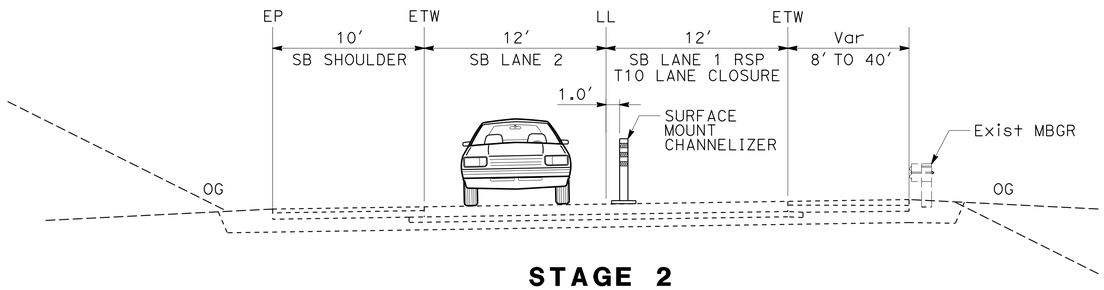

STAGE 2
TRAFFIC HANDLING
SOUTHBOUND "CS" 833+00 TO "CS" 853+00

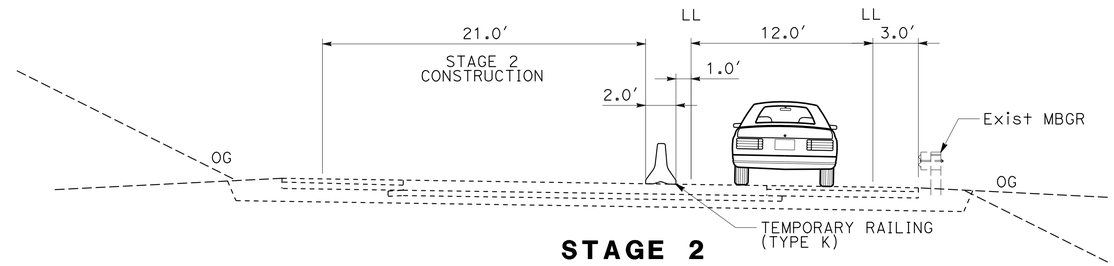

STAGE 2
TRAFFIC HANDLING
NORTHBOUND "CN" 831+50 TO "CN" 836+00

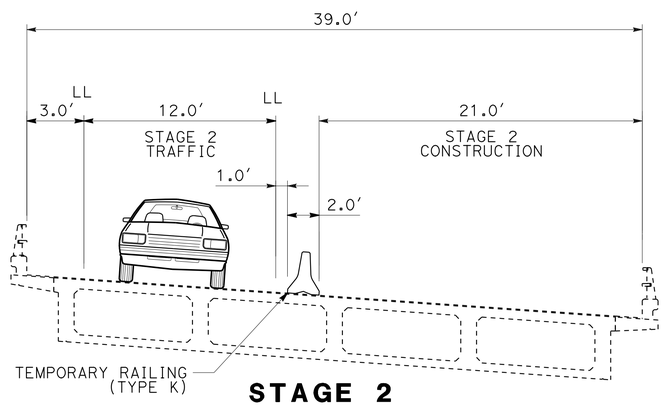

STAGE 2
TRAFFIC HANDLING
SOUTHBOUND "CS" 820+50 TO "CS" 833+00

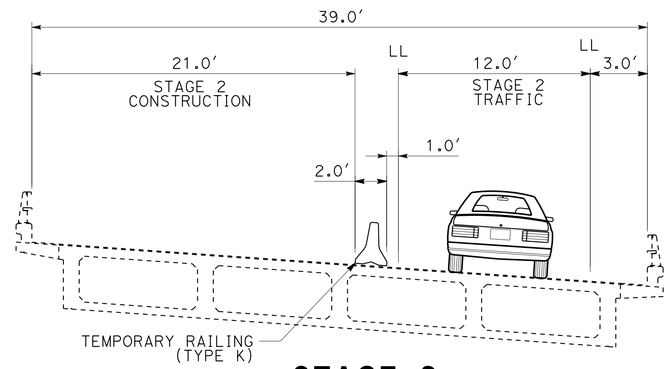

STAGE 2
TRAFFIC HANDLING
NORTHBOUND "CN" 811+60 TO "CN" 831+50

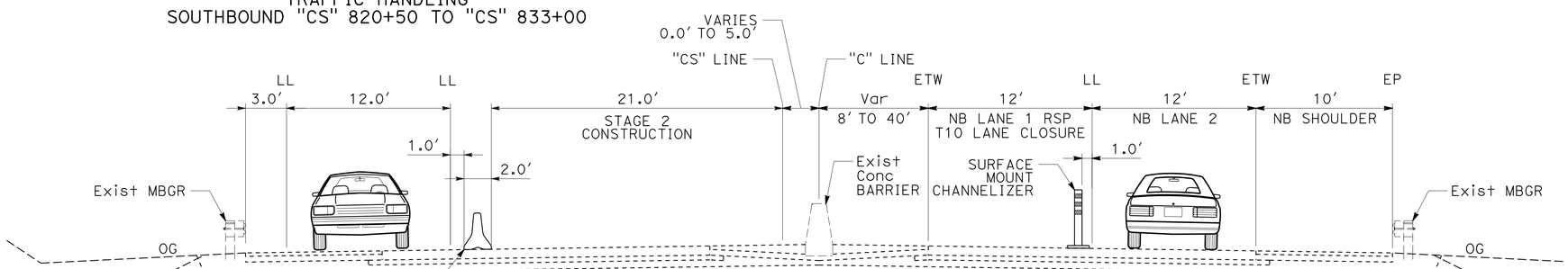

STAGE 2
SOUTHBOUND TRAFFIC HANDLING
"CS" 816+00 TO "CS" 820+50

STAGE 2
NORTHBOUND TRAFFIC HANDLING
"C" 779+00 TO "C" 815+12.71
"CN" 811+45.09 TO 811+60

STAGE CONSTRUCTION AND TRAFFIC HANDLING PLAN

NO SCALE

SCD-2

APPROVED FOR STAGE CONSTRUCTION AND TRAFFIC HANDLING WORK ONLY

REVISED BY | DATE REVISED
DAN BROWN | KEN HALLIS
CALCULATED-DESIGNED BY | CHECKED BY
FUNCTIONAL SUPERVISOR: ERIC ORR
STATE OF CALIFORNIA - DEPARTMENT OF TRANSPORTATION
Caltrans **DESIGN**
P:\proj1\02\4F58u_plans\pse\24f58umb002.dgn

LAST REVISION 04-11-16 | DATE PLOTTED => 21-JUN-2016 | TIME PLOTTED => 13:51

Dist	COUNTY	ROUTE	POST MILES TOTAL PROJECT	SHEET No.	TOTAL SHEETS
02	Sis	5	R57.8/R58.5	31	106

REGISTERED CIVIL ENGINEER DATE 06-10-16

PLANS APPROVAL DATE 06-15-16

REGISTERED PROFESSIONAL ENGINEER KEN HALLIS No. C38203 Exp. 3-31-17 STATE OF CALIFORNIA

THE STATE OF CALIFORNIA OR ITS OFFICERS OR AGENTS SHALL NOT BE RESPONSIBLE FOR THE ACCURACY OR COMPLETENESS OF ELECTRONIC COPIES OF THIS PLAN SHEET.

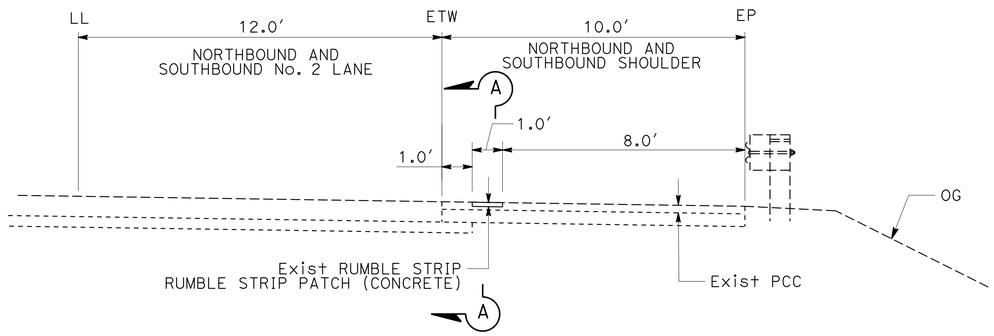

STAGE 2

RUMBLE STRIP PATCH (CONCRETE)

NORTHBOUND "CN" 812+00 TO 816+41
SOUTHBOUND "CS" 816+00 TO 820+16

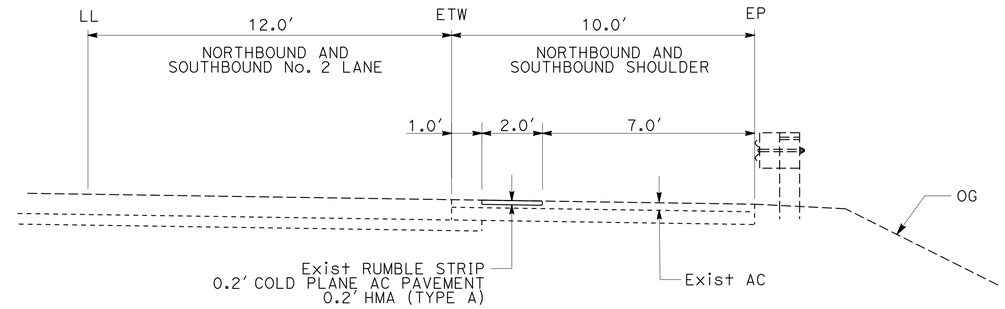

STAGE 2

COLD PLANE AC PAVEMENT (RUMBLE STRIP REMOVAL)

NORTHBOUND "CN" 831+75 TO 836+00
SOUTHBOUND "CS" 833+29.5 TO 838+00

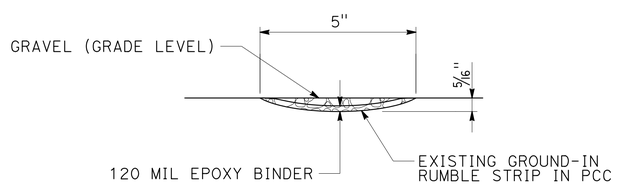

SECTION A-A

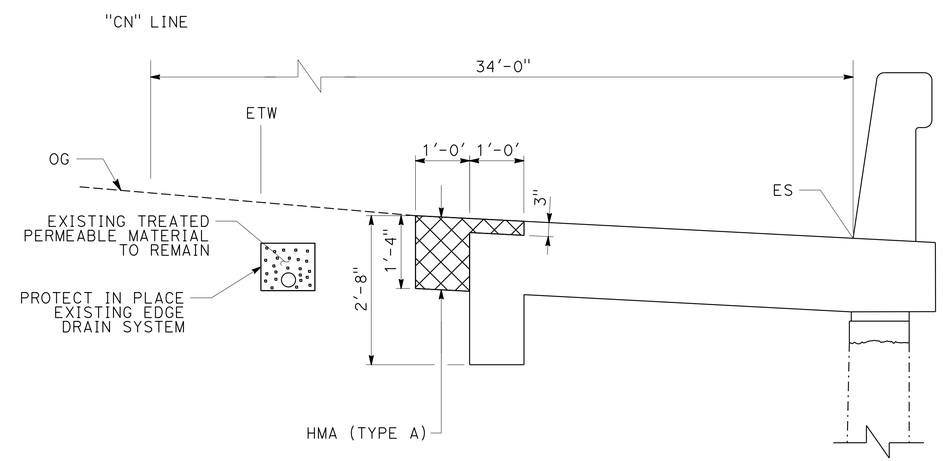

CONCRETE BARRIER SLAB BACKFILL

STAGE 1
"CN" 831+76 TO 832+92.12, Rt

STAGE CONSTRUCTION DETAILS

NO SCALE

SCD-3

REVISED BY	DATE REVISED

CALCULATED-DESIGNED BY: DAN BROWN
CHECKED BY: KEN HALLIS
FUNCTIONAL SUPERVISOR: ERIC ORR

STATE OF CALIFORNIA - DEPARTMENT OF TRANSPORTATION
Caltrans DESIGN

P:\proj1\02\4F58u_plans\pse\24f58umb003.dgn

LAST REVISION 04-11-16 | DATE PLOTTED => 21-JUN-2016 | TIME PLOTTED => 13:51

Dist	COUNTY	ROUTE	POST MILES TOTAL PROJECT	SHEET No.	TOTAL SHEETS
02	Sis	5	R57.8/R58.5	32	106

REGISTERED CIVIL ENGINEER DATE 06-10-16

PLANS APPROVAL DATE 06-15-16

REGISTERED PROFESSIONAL ENGINEER KEN HALLIS No. C38203 Exp. 3-31-17 STATE OF CALIFORNIA

THE STATE OF CALIFORNIA OR ITS OFFICERS OR AGENTS SHALL NOT BE RESPONSIBLE FOR THE ACCURACY OR COMPLETENESS OF ELECTRONIC COPIES OF THIS PLAN SHEET.

TRAFFIC HANDLING QUANTITIES

STATION	NORTHBOUND	SOUTHBOUND	TEMPORARY PAVEMENT MARKING (PAINT)	TEMPORARY TRAFFIC STRIPE (PAINT)	CHANNELIZER (SURFACE MOUNTED)	TEMPORARY RAILING (TYPE K)	TEMPORARY CRASH CUSHION SYSTEM	REMOVE THERMOPLASTIC TRAFFIC STRIPE	REMOVE PAVEMENT MARKERS	REMOVE PAINTED TRAFFIC STRIPE	REMOVE PAINTED PAVEMENT MARKING	REMARKS
			SQFT	LF	EA	LF	EA	LF	EA	LF	SQFT	
"C" 770+00	X		42								42	TYPE VI ARROW, STAGE 1
"C" 773+00	X		42								42	TYPE VI ARROW, STAGE 1
"C" 776+00	X		42								42	TYPE VI ARROW, STAGE 1
"C" 779+00 TO "C" 781+00	X							200				DETAIL 27B, STAGE 1
"C" 779+00 TO "C" 787+00	X			800				800	18			DETAIL 12 & 27B, STAGE 1
"C" 779+00 TO "C" 807+15.5	X				60							STAGE 1
"C" 807+15.5 TO "C" 810+62	X			348	16							DETAIL 27B, STAGE 1
"C" 807+15.5 TO "C" 808+65.5	X							150	4			DETAIL 12, STAGE 1
"C" 808+65.5 TO "C" 810+51	X			371	8							DETAIL 27B, STAGE 1
"C" 808+65.5 TO "C" 810+62	X			197	8							DETAIL 27B, STAGE 1
"C" 810+51 TO "C" 811+61	X				10							STAGE 1
"CN" 812+00	X						1					STAGE 1
"CN" 812+00 TO "CN" 835+40	X					2340						STAGE 1
"CS" 819+00 TO "CS" 839+00		X				2000						STAGE 1
"CS" 839+00		X					1					STAGE 1
"CS" 839+40 TO "CS" 840+94		X		154	8							DETAIL 27B, STAGE 1
"CS" 839+94 TO "CS" 840+94		X		100	6							DETAIL 27B, STAGE 1
"CS" 840+94 TO "CS" 841+94		X						100	3			DETAIL 12, STAGE 1
"CS" 841+00 TO "CS" 841+94		X		94								DETAIL 27B, STAGE 1
"CS" 841+94 TO "CS" 843+00		X			12							STAGE 1
"CS" 843+00 TO "CS" 853+00		X			17							STAGE 1
"CS" 845+00 TO "CS" 853+00		X		800				800	18			DETAIL 12 & 27B, STAGE 1
"CS" 851+00 TO "CS" 853+00		X						200				DETAIL 27B, STAGE 1
"CS" 856+00		X	42								42	TYPE VI ARROW, STAGE 1
"CS" 859+00		X	42								42	TYPE VI ARROW, STAGE 1
"CS" 861+00		X	42								42	TYPE VI ARROW, STAGE 1
"C" 779+00 TO "C" 781+00	X			200								DETAIL 27B, STAGE 1b *
"C" 779+00 TO "C" 787+00	X			800								DETAIL 12, STAGE 1b *
"C" 807+15.5 TO "C" 808+65.5	X			150								DETAIL 27B, STAGE 1b *
"CS" 840+94 TO "CS" 841+94		X		100								DETAIL 12, STAGE 1b *
"CS" 845+00 TO "CS" 853+00		X		800								DETAIL 12, STAGE 1b *
"CS" 851+00 TO "CS" 853+00		X		200								DETAIL 27B, STAGE 1b *
"C" 770+00	X		42								42	TYPE VI ARROW, STAGE 2
"C" 773+00	X		42								42	TYPE VI ARROW, STAGE 2
"C" 776+00	X		42								42	TYPE VI ARROW, STAGE 2
"C" 779+00 TO "C" 781+00	X							200	6			DETAIL 25, STAGE 2
"C" 779+00 TO "C" 787+00	X			800						800		DETAIL 27B & 12, STAGE 2
"C" 779+00 TO "CN" 811+60	X				74							STAGE 2
"CN" 811+60	X						1					STAGE 2
"CN" 812+00 TO "CN" 813+00	X							100	3			DETAIL 12, STAGE 2
"CN" 812+00 TO "CN" 836+00	X			4800		2400		2400				DETAIL 27B, STAGE 2
"CN" 835+00 TO "CS" 836+00	X							100	3			DETAIL 12, STAGE 2
"CN" 837+00 TO "CS" 838+00	X							100	3			DETAIL 12, STAGE 2
"CS" 816+00 TO "CS" 838+00		X		4400		2200		2200				DETAIL 27B, STAGE 2
"CS" 816+00 TO "CS" 817+00		X						100	3			DETAIL 12, STAGE 2
"CS" 838+00		X					1					STAGE 2
"CS" 838+40 TO "CS" 853+00		X			32							STAGE 2
"CS" 845+00 TO "CS" 853+00		X		800						800		DETAIL 27B & 12, STAGE 2
"CS" 851+00 TO "CS" 853+00		X						200				DETAIL 25, STAGE 2
"CS" 856+00		X	42								42	TYPE VI ARROW, STAGE 2
"CS" 859+00		X	42								42	TYPE VI ARROW, STAGE 2
"CS" 861+00		X	42								42	TYPE VI ARROW, STAGE 2
TOTAL			504	15,914	251	8940	4	7650	61	1600	504	

NOTES:

* TRAFFIC STRIPE TO BE PLACED IN THE ORIGINAL LOCATION FOR THE MONTHS BEGINNING NOVEMBER 1st WHEN NO CONSTRUCTION ACTIVITIES ARE TAKING PLACE

** SEE SUMMARY OF QUANTITIES FOR ADDITIONAL QUANTITIES

STAGE CONSTRUCTION QUANTITIES

STATION	NORTHBOUND	SOUTHBOUND	RUMBLE STRIP PATCH (CONCRETE)	COLD PLANE ASPHALT CONCRETE PAVEMENT	HMA (TYPE A) **	REMARKS
			SQYD	SQYD	TON	
"CN" 831+76 TO 832+92.12	X				14.0	STAGE 1, Conc BARRIER SLAB BACKFILL
"CS" 816+00 TO 820+16		X	19.4			STAGE 2, Conc PATCH (RUMBLE STRIP)
"CS" 833+49.5 TO 838+00		X		104.5	22.2	STAGE 2, REMOVE RUMBLE STRIP
"CN" 812+00 TO 816+41	X		20.6			STAGE 2, Conc PATCH (RUMBLE STRIP)
"CN" 818+00 TO 820+50.16	X		11.7			STAGE 2, Conc PATCH (RUMBLE STRIP)
"CN" 833+12 TO 836+92	X			94.5	22.8	STAGE 2, REMOVE RUMBLE STRIP
TOTAL			51.7	199.0	59.0	

STAGE CONSTRUCTION AND TRAFFIC HANDLING QUANTITIES

SCQ-1

REVISED BY | DATE REVISED

DAN BROWN | KEN HALLIS

CALCULATED-DESIGNED BY | CHECKED BY

FUNCTIONAL SUPERVISOR: ERIC ORR

STATE OF CALIFORNIA - DEPARTMENT OF TRANSPORTATION

Caltrans DESIGN

P:\proj1\02\4F58u_plans\pse\24f58umc001.dgn

LAST REVISION 04-11-16 | DATE PLOTTED => 21-JUN-2016 | TIME PLOTTED => 13:51

Dist	COUNTY	ROUTE	POST MILES TOTAL PROJECT	SHEET No.	TOTAL SHEETS
02	Sis	5	R57.8/R58.5	33	106

REGISTERED CIVIL ENGINEER DATE 06-10-16

PLANS APPROVAL DATE 06-15-16

REGISTERED PROFESSIONAL ENGINEER KEN HALLIS No. C38203 Exp. 3-31-17 STATE OF CALIFORNIA

THE STATE OF CALIFORNIA OR ITS OFFICERS OR AGENTS SHALL NOT BE RESPONSIBLE FOR THE ACCURACY OR COMPLETENESS OF ELECTRONIC COPIES OF THIS PLAN SHEET.

CONSTRUCTION AREA SIGNS (STATIONARY MOUNTED)

CODE	PANEL SIZE	SIGN MESSAGE	NUMBER AND SIZE OF POSTS	NUMBER OF SIGNS (PER STAGE)							
				1A	1B	1C	2A	2B	3A	3B	3C
W20-5 (L+)	48" x 48"	LEFT LANE CLOSED AHEAD	1 - 4" x 6"	2	2	2	4		2	2	2
W20-5 (R+)	48" x 48"	RIGHT LANE CLOSED AHEAD	1 - 4" x 6"	2	2	2		4	2	2	2
W4-2L	48" x 48"	LEFT LANE ENDS	1 - 4" x 6"	2	2	2	4		2	2	2
W4-2R	48" x 48"	RIGHT LANE ENDS	1 - 4" x 6"	2	2	2		4	2	2	2
C30 (CA)	48" x 48"	LANE CLOSED	1 - 4" x 6"	2	2	2	2	2	2	2	2
W1-4L	48" x 48"	REVERSE CURVE (LEFT)	1 - 4" x 6"	1	1	1			1	1	1
W1-4R *	48" x 48"	REVERSE CURVE (RIGHT)	1 - 4" x 6"	1	1				1	1	1
			TOTAL THIS SHEET	14	14	13	10	10	14	14	14

* SEE STAGE CONSTRUCTION AND TRAFFIC HANDLING DETAILS FOR SIGN LOCATION.

NOTES:

1. FOR LEFT LANE CLOSURE, MIRROR ARROW PLACEMENT, STRIPING, CHANNELIZERS AND USE W20-5 (L+) AND W4-2 (L+).
2. SEE STANDARD PLANS FOR ADDITIONAL INFORMATION.
3. MEDIAN SIGNS MAY NEED TO BE BARRIER MOUNTED, SEE SIGN DETAILS FOR MOUNTING BRACKET.

LEGEND:

- CONSTRUCTION AREA SIGNS (STATIONARY MOUNTED)
- DIRECTION OF TRAVEL
- STRIPE CHANGE LOCATION
- CHANNELIZER

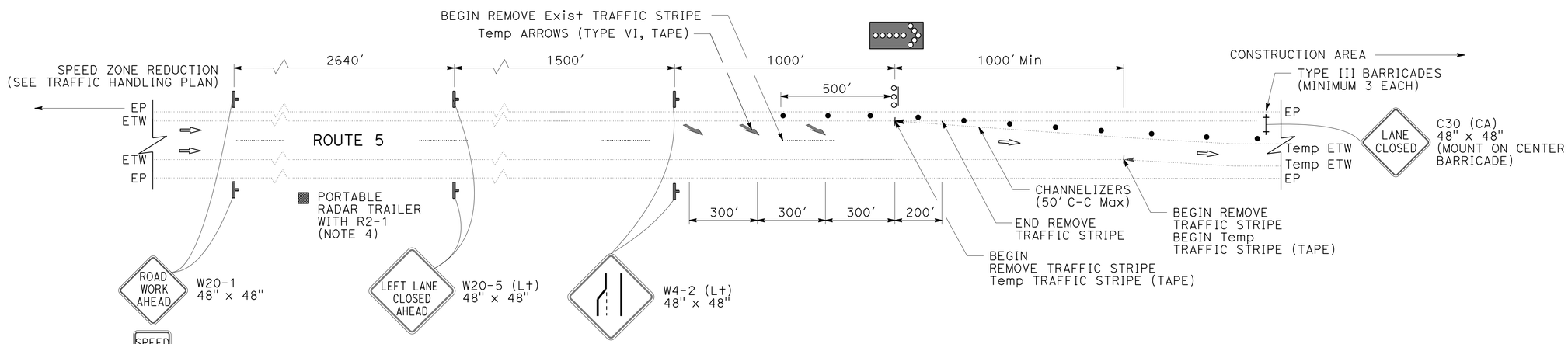

TYPICAL LANE CLOSURE WITH PARTIAL SHOULDER USE AT BRIDGES

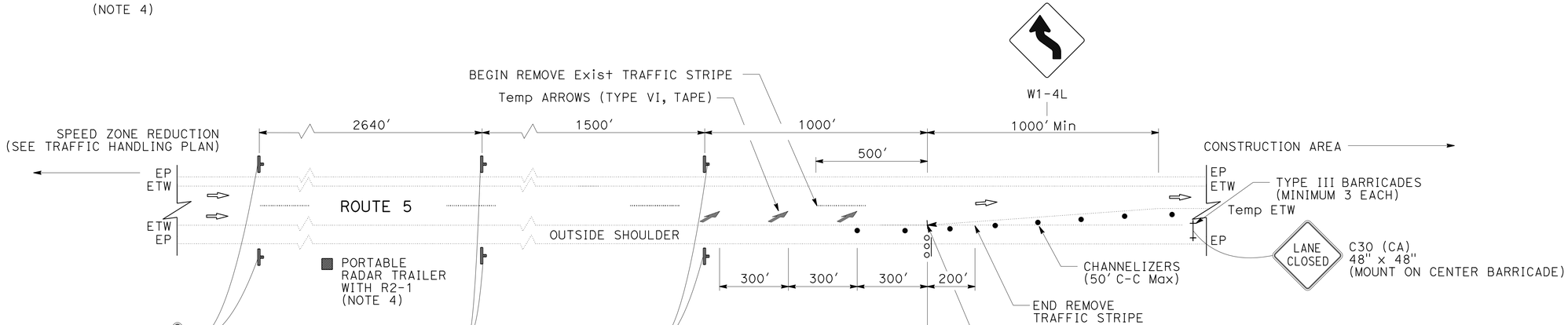

TYPICAL LANE CLOSURE

TRAFFIC HANDLING DETAILS

NO SCALE

THD-1

REVISED BY	DATE REVISED
DAN BROWN	KEN HALLIS
CALCULATED-DESIGNED BY	CHECKED BY
FUNCTIONAL SUPERVISOR	ERIC ORR

STATE OF CALIFORNIA - DEPARTMENT OF TRANSPORTATION

Caltrans DESIGN

P:\proj1\02\4f58u_plans\pse\24f58ume001.dgn

LAST REVISION 04-11-16 | DATE PLOTTED => 21-JUN-2016 | TIME PLOTTED => 13:51

Dist	COUNTY	ROUTE	POST MILES TOTAL PROJECT	SHEET No.	TOTAL SHEETS
02	Sis	5	R57.8/R58.5	34	106

REGISTERED CIVIL ENGINEER DATE 06-10-16

PLANS APPROVAL DATE 06-15-16

REGISTERED PROFESSIONAL ENGINEER KEN HALLIS No. C38203 Exp. 3-31-17 STATE OF CALIFORNIA

THE STATE OF CALIFORNIA OR ITS OFFICERS OR AGENTS SHALL NOT BE RESPONSIBLE FOR THE ACCURACY OR COMPLETENESS OF ELECTRONIC COPIES OF THIS PLAN SHEET.

NOTES:

1. IF AVAILABLE, EXISTING ROUTE SHIELDS AND DIRECTIONS MAY BE USED IN PLACE OF SIGNS SHOWN.
2. SIGNS SHOWN WITH (CA) INDICATE CALIFORNIA SIGN CODES, OTHERWISE FEDERAL SIGN CODES ARE SHOWN.
3. EXACT SIGN AND PCMS LOCATIONS TO BE DETERMINED BY THE ENGINEER.
4. SEE STANDARD PLAN RSP T14 FOR ADDITIONAL REQUIREMENTS.
5. PLACE SIGNS BETWEEN INTERCHANGES EVERY 1 MILE.

LEGEND:

PCMS

TYPE III BARRICADE WITH SIGN PANEL

TRAFFIC DETOUR PLAN

NB OFF-RAMP CLOSED AT KLAMATH RIVER ROAD:
PROCEED NORTH ON Rte 5 TO HENLEY/HORNBROOK
TURN LEFT AT END OF RAMP
TURN LEFT AT SB ON-RAMP TO Rte 5
EXIT AT Rte 96

CONSTRUCTION AREA SIGNS (PORTABLE)

SIGN TYPE ◯	SIGN CODE	MESSAGE	PANEL SIZE	No. OF SIGNS
1*	SC6-3(CA) OR SC6-4(CA)	RAMP CLOSED (DATE-TIME) RAMP CLOSED (DATE-DATE)	48" x 48" 48" x 60"	2
2	M4-10(L†)	DETOUR (L† ARROW)	48" x 18"	2
3	SC3(CA)	DETOUR (UP ARROW)	48" x 18"	7
4	M4-10(R†)	DETOUR (R† ARROW)	48" x 18"	2
5	M4-8a	END DETOUR	24" x 18"	2
6	C2-1(CA)	ROAD CLOSED (ON TYPE III BARRICADE)	36" x 24"	2
		TOTAL THIS SHEET		17

* PLACE SIGN SEVEN DAYS PRIOR TO RAMP CLOSURE.
USE SC6-4 FOR CLOSURES GREATER THAN 24 HOURS.

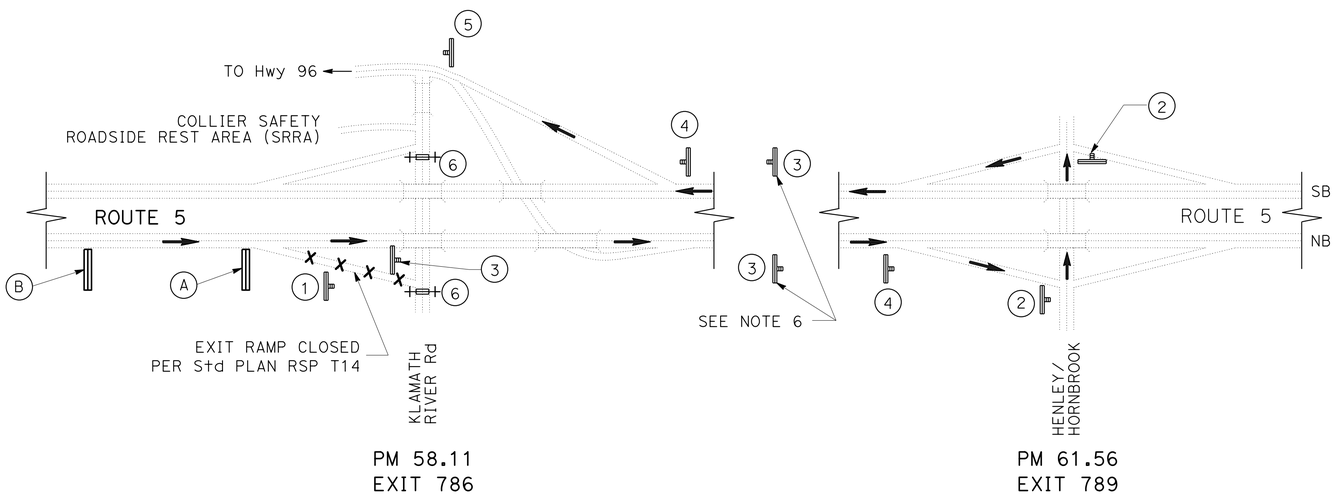

NB EXIT 786 CLOSURE DETOUR SIGNING

NB OFF-RAMP AT KLAMATH RIVER ROAD UC

PCMS MESSAGES

PRE-CLOSURE: PLACE PCMS 12 HOURS PRIOR TO CLOSURE AND ACTIVATE

	FRAME 1	FRAME 2
(A)	RAMP WILL BE CLOSED	TODAY (OR TONIGHT) X PM - Y AM

DURING CLOSURE: MOVE PCMS Approx 1000' BEFORE RAMP AND ACTIVATE

	FRAME 1	FRAME 2
(B)	RAMP TO Hwy 96 CLOSED	FOLLOW DETOUR

APPROVED FOR DETOUR WORK ONLY

DETOUR PLAN

NO SCALE

DE-1

STATE OF CALIFORNIA - DEPARTMENT OF TRANSPORTATION
Caltrans DESIGN

FUNCTIONAL SUPERVISOR: ERIC ORR
CALCULATED-DESIGNED BY: DAN BROWN
CHECKED BY: KEN HALLIS
REVISED BY
DATE REVISED

P:\proj1\02\4F58u_plans\pse\24f58umg002.dgn

LAST REVISION 04-11-16 | DATE PLOTTED => 21-JUN-2016 | TIME PLOTTED => 13:51

Dist	COUNTY	ROUTE	POST MILES TOTAL PROJECT	SHEET No.	TOTAL SHEETS
02	Sis	5	R57.8/R58.5	35	106

KEN HALLIS 06-10-16
REGISTERED CIVIL ENGINEER DATE

06-15-16
PLANS APPROVAL DATE

REGISTERED PROFESSIONAL ENGINEER
KEN HALLIS
No. C38203
Exp. 3-31-17
STATE OF CALIFORNIA

THE STATE OF CALIFORNIA OR ITS OFFICERS OR AGENTS SHALL NOT BE RESPONSIBLE FOR THE ACCURACY OR COMPLETENESS OF ELECTRONIC COPIES OF THIS PLAN SHEET.

LEGEND:

BEGIN/END STRIPE

No. — PAVEMENT DELINEATION STRIPE DETAIL No.

P — OBJECT MARKER (TYPE P)

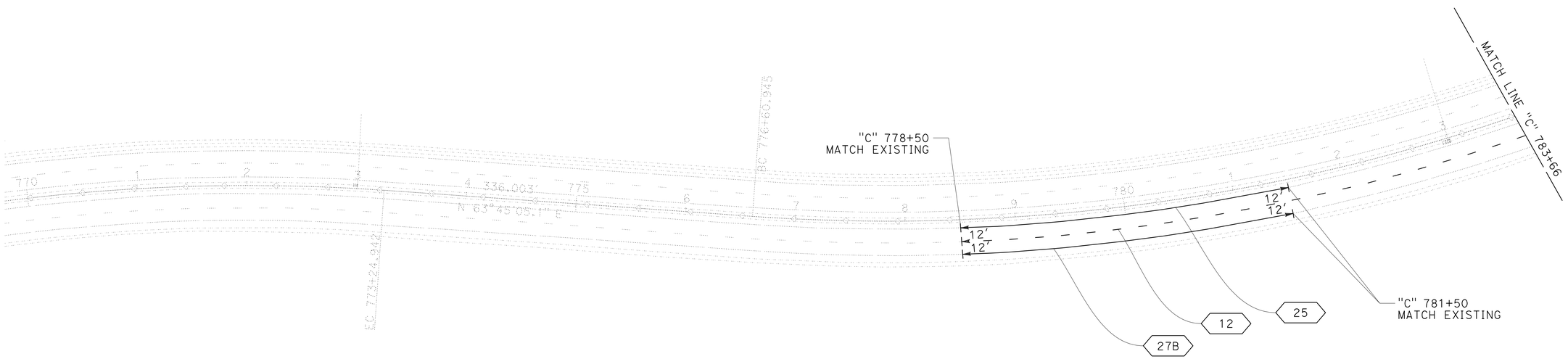

PAVEMENT DELINEATION PLAN

SCALE: 1" = 50'

APPROVED FOR PAVEMENT DELINEATION WORK ONLY

PD-1

REVISED BY	DATE REVISED

CALCULATED-DESIGNED BY: DAN BROWN
CHECKED BY: KEN HALLIS
FUNCTIONAL SUPERVISOR: ERIC ORR

STATE OF CALIFORNIA - DEPARTMENT OF TRANSPORTATION
Caltrans **DESIGN**

P:\proj\02\4F58u_plans\pse\24f58una001.dgn

LAST REVISION 04-11-16 | DATE PLOTTED => 21-JUN-2016 | TIME PLOTTED => 13:51

Dist	COUNTY	ROUTE	POST MILES TOTAL PROJECT	SHEET No.	TOTAL SHEETS
02	Sis	5	R57.8/R58.5	36	106

KEN HALLIS 06-10-16
REGISTERED CIVIL ENGINEER DATE

06-15-16
PLANS APPROVAL DATE

REGISTERED PROFESSIONAL ENGINEER
KEN HALLIS
No. C38203
Exp. 3-31-17
STATE OF CALIFORNIA

THE STATE OF CALIFORNIA OR ITS OFFICERS OR AGENTS SHALL NOT BE RESPONSIBLE FOR THE ACCURACY OR COMPLETENESS OF ELECTRONIC COPIES OF THIS PLAN SHEET.

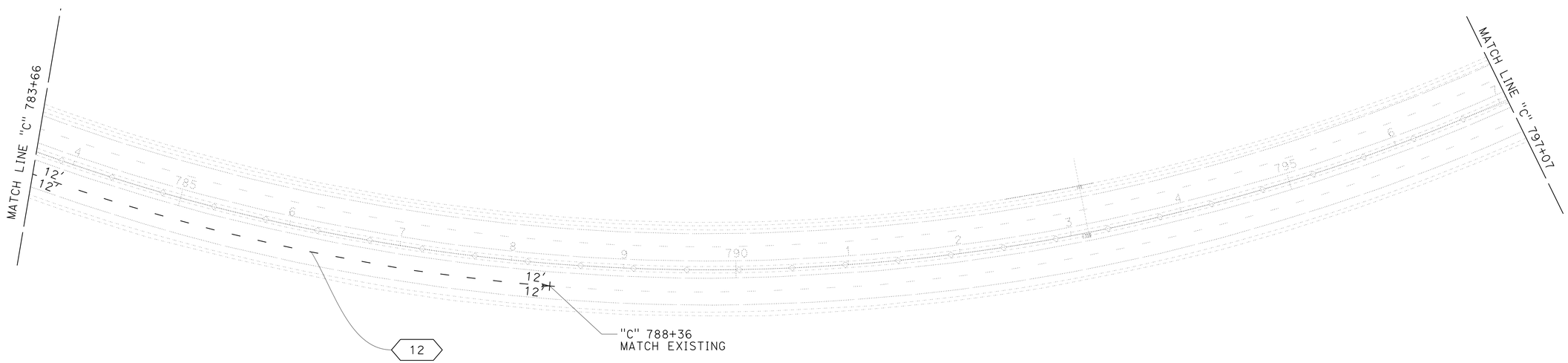

PAVEMENT DELINEATION PLAN

SCALE: 1" = 50'

PD-2

APPROVED FOR PAVEMENT DELINEATION WORK ONLY

CALCULATED-DESIGNED BY	DAN BROWN
CHECKED BY	KEN HALLIS
FUNCTIONAL SUPERVISOR	ERIC ORR
REVISED BY	
DATE REVISED	

STATE OF CALIFORNIA - DEPARTMENT OF TRANSPORTATION
Caltrans **DESIGN**

P:\proj1\02\4F58u_plans\pse\24f58una002.dgn

LAST REVISION 04-11-16
DATE PLOTTED => 21-JUN-2016
TIME PLOTTED => 13:51

Dist	COUNTY	ROUTE	POST MILES TOTAL PROJECT	SHEET No.	TOTAL SHEETS
02	Sis	5	R57.8/R58.5	37	106

Ken Hallis 06-10-16
REGISTERED CIVIL ENGINEER DATE

06-15-16
PLANS APPROVAL DATE

REGISTERED PROFESSIONAL ENGINEER
KEN HALLIS
No. C38203
Exp. 3-31-17
STATE OF CALIFORNIA

THE STATE OF CALIFORNIA OR ITS OFFICERS OR AGENTS SHALL NOT BE RESPONSIBLE FOR THE ACCURACY OR COMPLETENESS OF ELECTRONIC COPIES OF THIS PLAN SHEET.

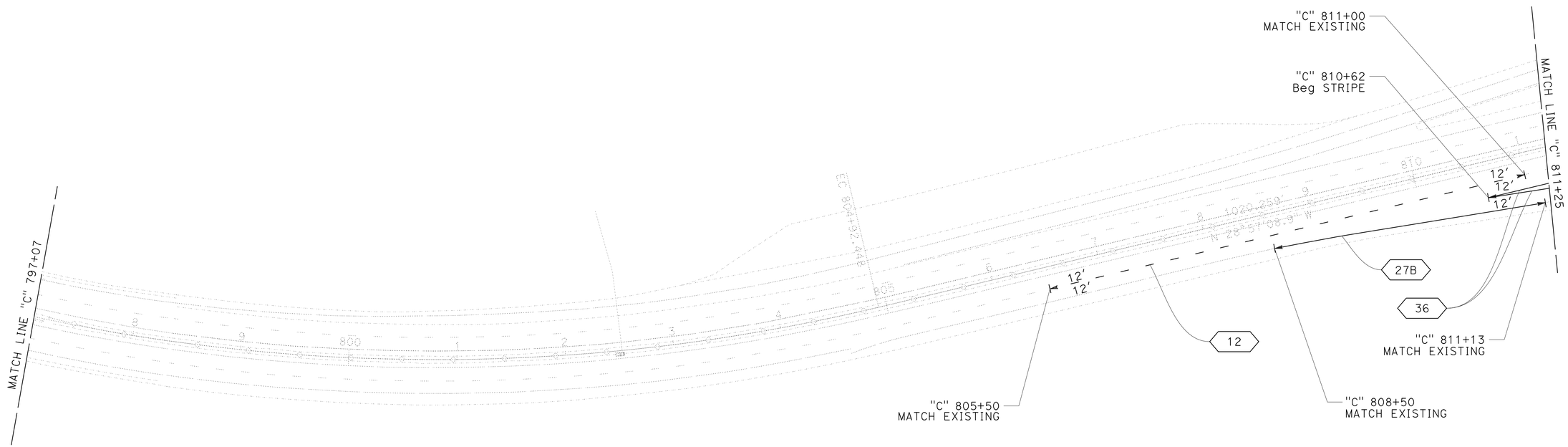

PAVEMENT DELINEATION PLAN

SCALE: 1" = 50'

PD-3

APPROVED FOR PAVEMENT DELINEATION WORK ONLY

REVISED BY	DAN BROWN
DATE REVISED	KEN HALLIS
CALCULATED-DESIGNED BY	
CHECKED BY	
FUNCTIONAL SUPERVISOR	ERIC ORR

STATE OF CALIFORNIA - DEPARTMENT OF TRANSPORTATION
Caltrans **DESIGN**

P:\proj1\02\4F58u_plans\pse\24f58una003.dgn

LAST REVISION | DATE PLOTTED => 21-JUN-2016
04-11-16 | TIME PLOTTED => 13:51

BORDER LAST REVISED 7/2/2010 | USERNAME => S123119 | DGN FILE => 24f58una003.dgn | RELATIVE BORDER SCALE IS IN INCHES 0 1 2 3 | UNIT 0316 | PROJECT NUMBER & PHASE 02 1500 0021 1

Dist	COUNTY	ROUTE	POST MILES TOTAL PROJECT	SHEET No.	TOTAL SHEETS
02	Sis	5	R57.8/R58.5	38	106

KEN HALLIS 06-10-16
REGISTERED CIVIL ENGINEER DATE

06-15-16
PLANS APPROVAL DATE

REGISTERED PROFESSIONAL ENGINEER KEN HALLIS No. C38203 Exp. 3-31-17 STATE OF CALIFORNIA

THE STATE OF CALIFORNIA OR ITS OFFICERS OR AGENTS SHALL NOT BE RESPONSIBLE FOR THE ACCURACY OR COMPLETENESS OF ELECTRONIC COPIES OF THIS PLAN SHEET.

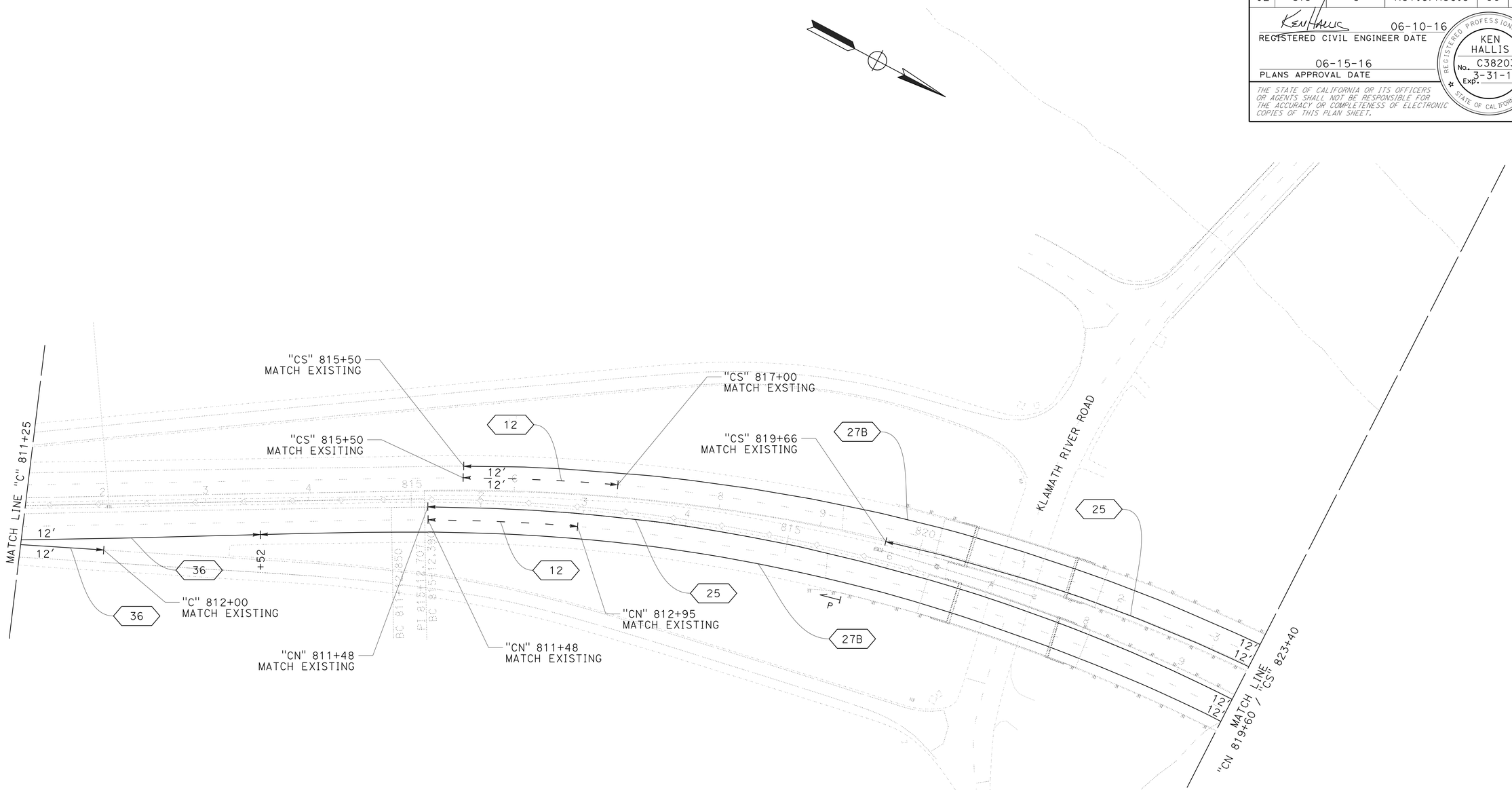

PAVEMENT DELINEATION PLAN

SCALE: 1" = 50'

APPROVED FOR PAVEMENT DELINEATION WORK ONLY

PD-4

REVISED BY	DAN BROWN
DATE REVISED	
CALCULATED-DESIGNED BY	KEN HALLIS
CHECKED BY	
FUNCTIONAL SUPERVISOR	ERIC ORR

STATE OF CALIFORNIA - DEPARTMENT OF TRANSPORTATION
Caltrans **DESIGN**

P:\proj1\02\4f58u_plans\pse\24f58una004.dgn

LAST REVISION 04-11-16 | DATE PLOTTED => 21-JUN-2016 | TIME PLOTTED => 13:51

Dist	COUNTY	ROUTE	POST MILES TOTAL PROJECT	SHEET No.	TOTAL SHEETS
02	Sis	5	R57.8/R58.5	39	106

Ken Hallis 06-10-16
REGISTERED CIVIL ENGINEER DATE

06-15-16
PLANS APPROVAL DATE

REGISTERED PROFESSIONAL ENGINEER
KEN HALLIS
No. C38203
Exp. 3-31-17
STATE OF CALIFORNIA

THE STATE OF CALIFORNIA OR ITS OFFICERS OR AGENTS SHALL NOT BE RESPONSIBLE FOR THE ACCURACY OR COMPLETENESS OF ELECTRONIC COPIES OF THIS PLAN SHEET.

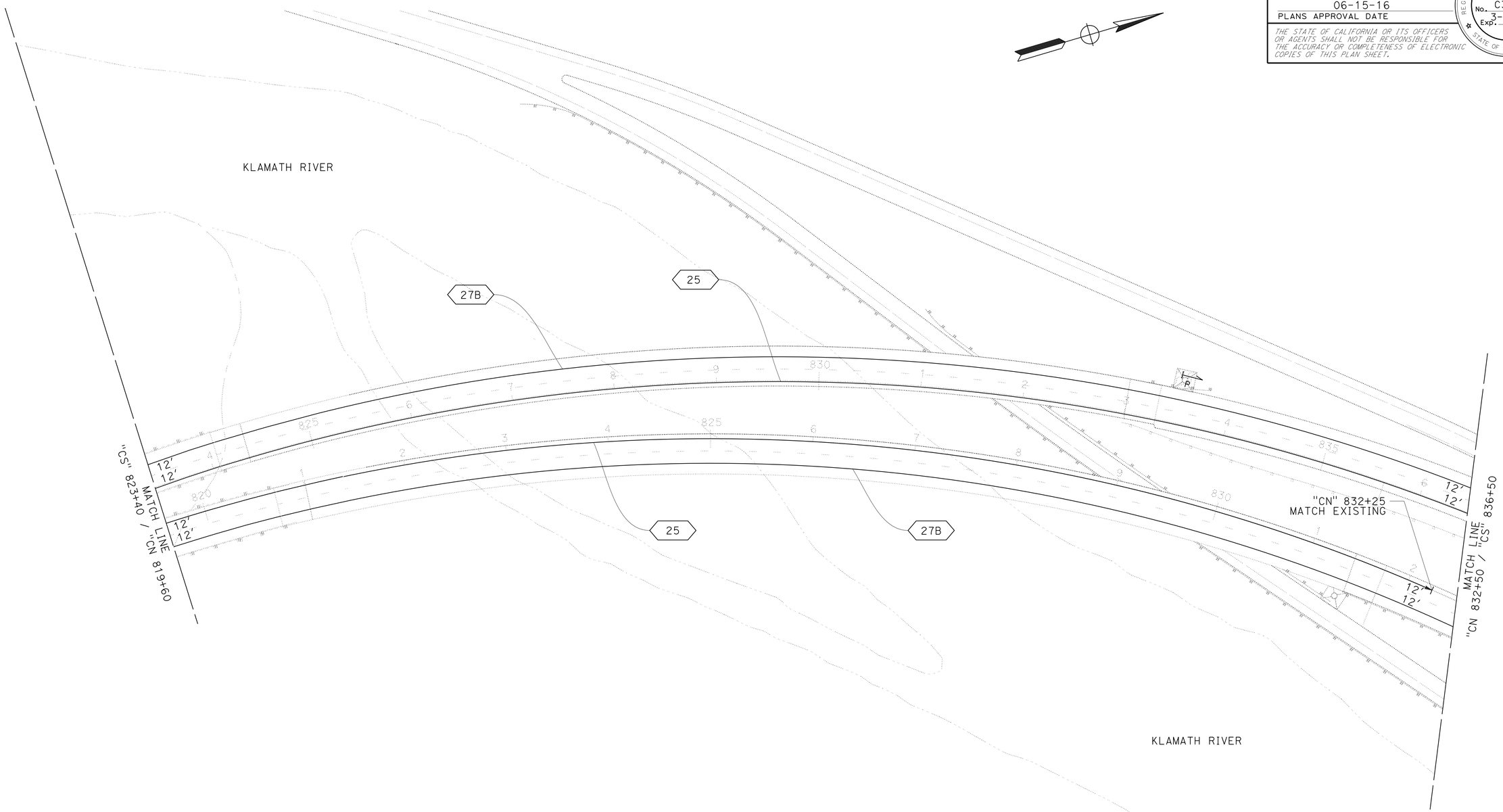

PAVEMENT DELINEATION PLAN

SCALE: 1" = 50'

APPROVED FOR PAVEMENT DELINEATION WORK ONLY

PD-5

REVISED BY	DATE REVISED

CALCULATED-DESIGNED BY: DAN BROWN
CHECKED BY: KEN HALLIS
FUNCTIONAL SUPERVISOR: ERIC ORR

STATE OF CALIFORNIA - DEPARTMENT OF TRANSPORTATION
Caltrans **DESIGN**

P:\proj1\02\4f58u_plans\pse\24f58una005.dgn

LAST REVISION 04-11-16 | DATE PLOTTED => 21-JUN-2016 | TIME PLOTTED => 13:51

Dist	COUNTY	ROUTE	POST MILES TOTAL PROJECT	SHEET No.	TOTAL SHEETS
02	Sis	5	R57.8/R58.5	40	106

REGISTERED CIVIL ENGINEER DATE 06-10-16

PLANS APPROVAL DATE 06-15-16

REGISTERED PROFESSIONAL ENGINEER KEN HALLIS No. C38203 Exp. 3-31-17 STATE OF CALIFORNIA

THE STATE OF CALIFORNIA OR ITS OFFICERS OR AGENTS SHALL NOT BE RESPONSIBLE FOR THE ACCURACY OR COMPLETENESS OF ELECTRONIC COPIES OF THIS PLAN SHEET.

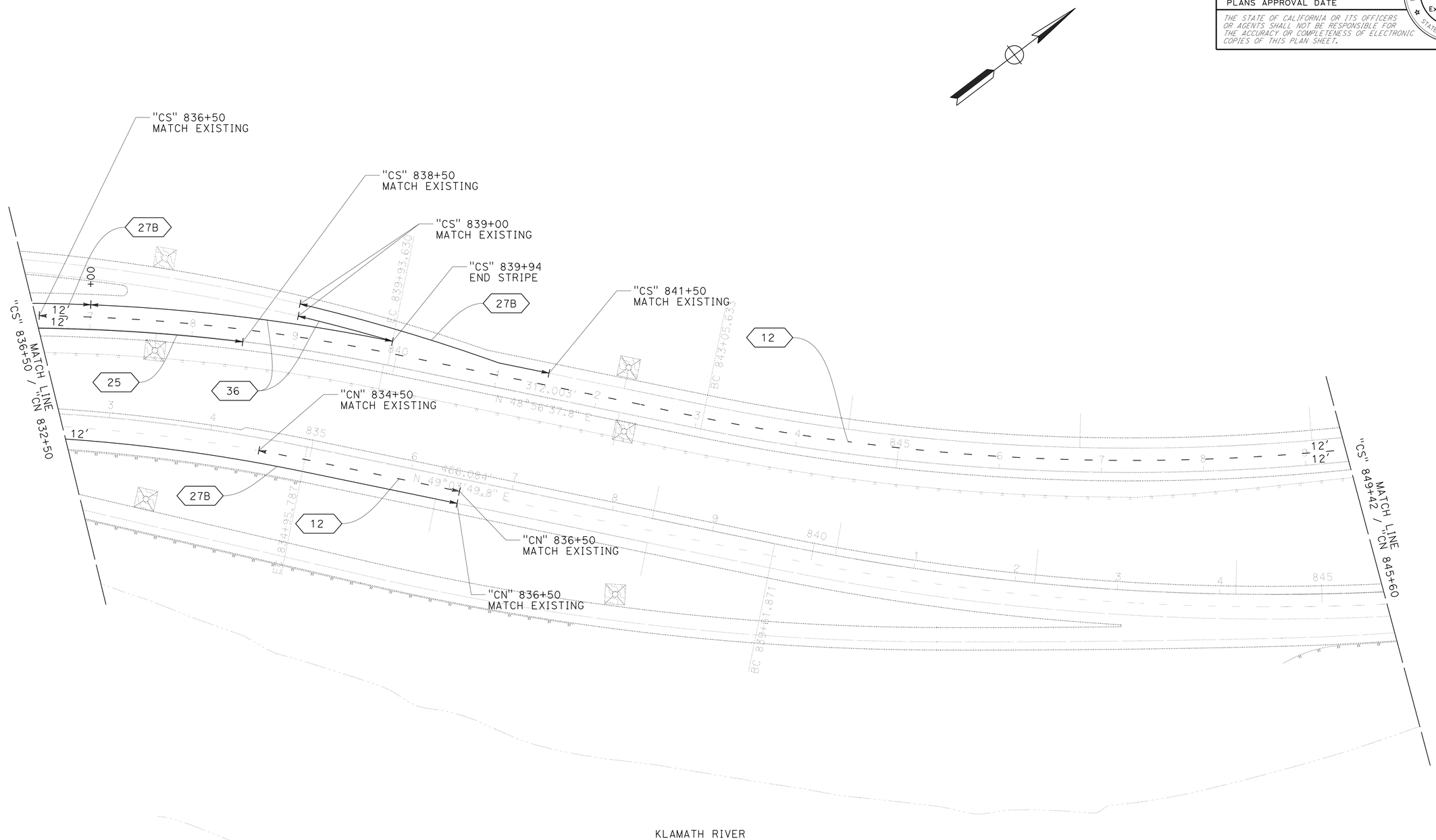

PAVEMENT DELINEATION PLAN

SCALE: 1" = 50'

PD-6

APPROVED FOR PAVEMENT DELINEATION WORK ONLY

REVISED BY	DATE REVISED

DAN BROWN	KEN HALLIS
CALCULATED-DESIGNED BY	CHECKED BY
FUNCTIONAL SUPERVISOR	ERIC ORR

STATE OF CALIFORNIA - DEPARTMENT OF TRANSPORTATION

Caltrans DESIGN

P:\proj1\02\4f58u_plans\pse\24f58una006.dgn

LAST REVISION 04-11-16 | DATE PLOTTED => 21-JUN-2016 | TIME PLOTTED => 13:51

Dist	COUNTY	ROUTE	POST MILES TOTAL PROJECT	SHEET No.	TOTAL SHEETS
02	Sis	5	R57.8/R58.5	41	106

KEN HALLIS 06-10-16
REGISTERED CIVIL ENGINEER DATE

06-15-16
PLANS APPROVAL DATE

REGISTERED PROFESSIONAL ENGINEER
KEN HALLIS
No. C38203
Exp. 3-31-17
STATE OF CALIFORNIA

THE STATE OF CALIFORNIA OR ITS OFFICERS OR AGENTS SHALL NOT BE RESPONSIBLE FOR THE ACCURACY OR COMPLETENESS OF ELECTRONIC COPIES OF THIS PLAN SHEET.

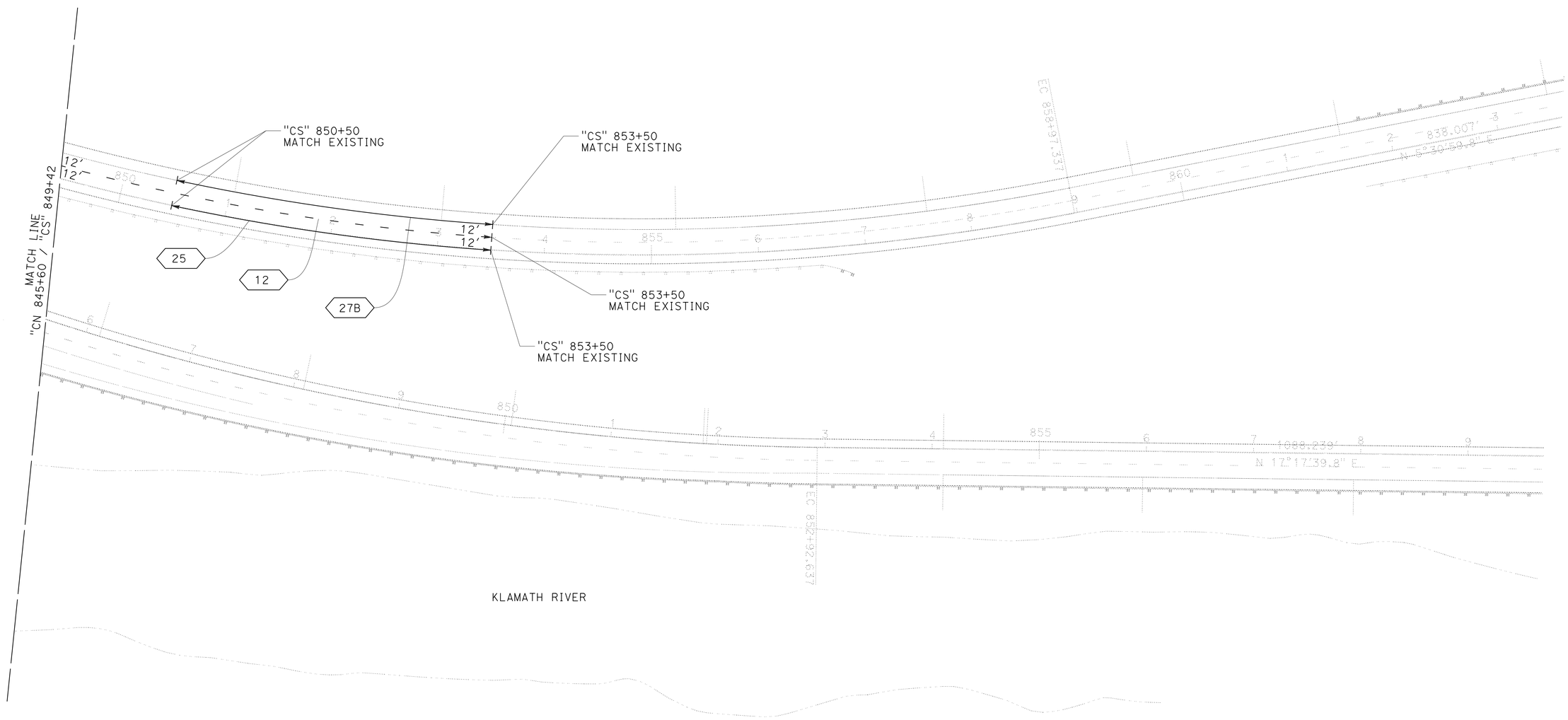

PAVEMENT DELINEATION PLAN

SCALE: 1" = 50'

PD-7

APPROVED FOR PAVEMENT DELINEATION WORK ONLY

REVISED BY	DATE REVISED

CALCULATED-DESIGNED BY	CHECKED BY
DAN BROWN	KEN HALLIS

FUNCTIONAL SUPERVISOR: ERIC ORR

STATE OF CALIFORNIA - DEPARTMENT OF TRANSPORTATION
Caltrans **DESIGN**

P:\proj1\02\4F58u_plans\pse\24f58una007.dgn

LAST REVISION 04-11-16 | DATE PLOTTED => 21-JUN-2016 | TIME PLOTTED => 13:51

Dist	COUNTY	ROUTE	POST MILES TOTAL PROJECT	SHEET No.	TOTAL SHEETS
02	Sis	5	R57.8/R58.5	42	106

REGISTERED CIVIL ENGINEER DATE 06-10-16

PLANS APPROVAL DATE 06-15-16

REGISTERED PROFESSIONAL ENGINEER KEN HALLIS No. C38203 Exp. 3-31-17 STATE OF CALIFORNIA

THE STATE OF CALIFORNIA OR ITS OFFICERS OR AGENTS SHALL NOT BE RESPONSIBLE FOR THE ACCURACY OR COMPLETENESS OF ELECTRONIC COPIES OF THIS PLAN SHEET.

LEGEND

DIRECTION OF TRAFFIC

XX PAVEMENT DELINEATION STRIPE DETAIL No.

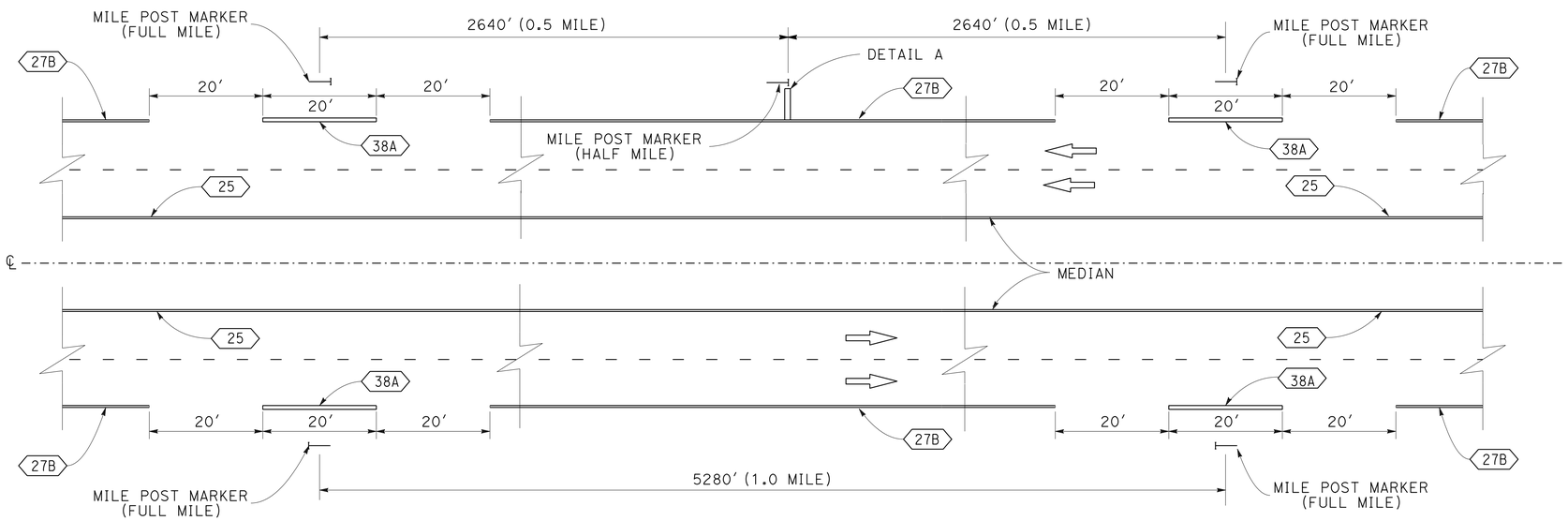

TYPICAL HALF MILE AND MILE POST STRIPE

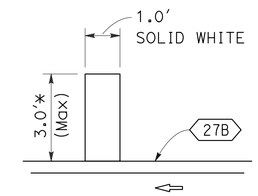

DETAIL A

* ACTUAL LENGTH MAY VARY DUE TO PAVEMENT WIDTH

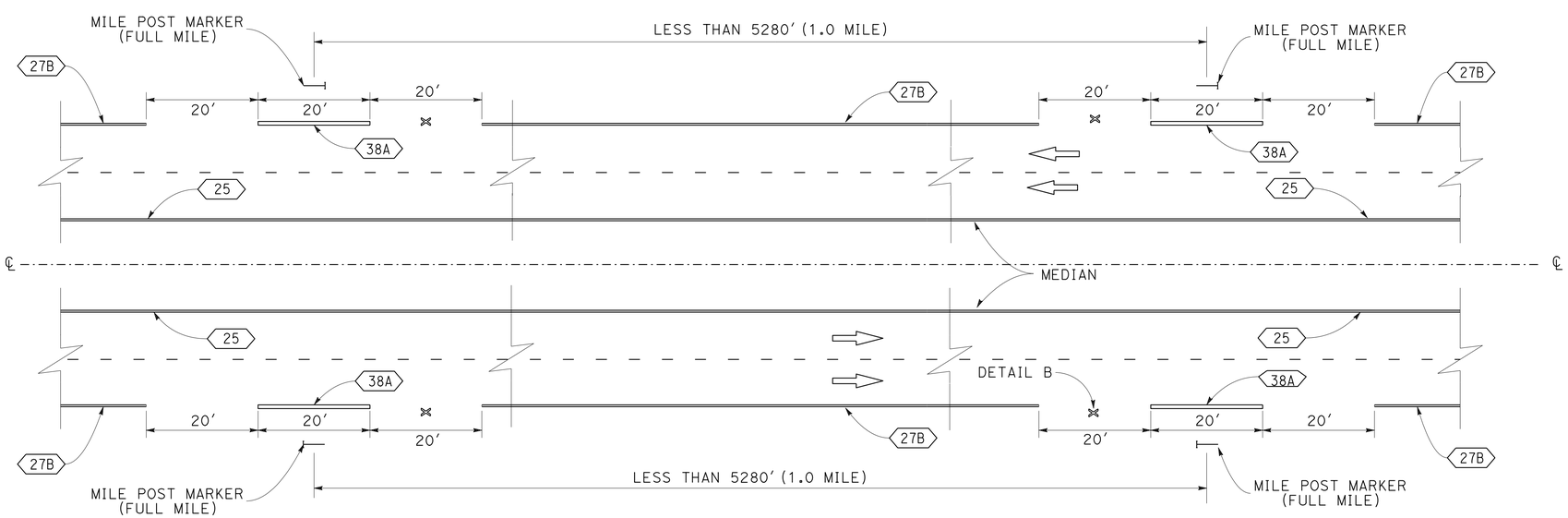

TYPICAL MILE POST STRIPE FOR EQUATIONS

(NO DETAIL "A" WITHIN AN EQUATION)

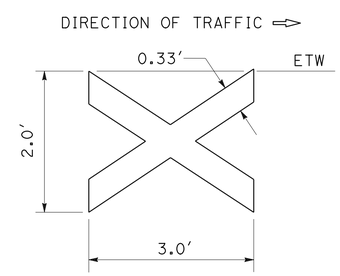

DETAIL B

0.33′ SOLID WHITE

PAVEMENT DELINEATION DETAILS

NO SCALE

PDD-1

REVISED BY	DATE REVISED
DAN BROWN	KEN HALLIS
CALCULATED-DESIGNED BY	CHECKED BY
FUNCTIONAL SUPERVISOR	ERIC ORR

STATE OF CALIFORNIA - DEPARTMENT OF TRANSPORTATION

Caltrans DESIGN

P:\proj1\02\4F58u_plans\pse\24f58unb001.dgn

LAST REVISION 04-11-16 | DATE PLOTTED => 21-JUN-2016 | TIME PLOTTED => 13:51

Dist	COUNTY	ROUTE	POST MILES TOTAL PROJECT	SHEET No.	TOTAL SHEETS
02	Sis	5	R57.8/R58.5	43	106

KEN HALLIS 06-10-16
REGISTERED CIVIL ENGINEER DATE

06-15-16
PLANS APPROVAL DATE

REGISTERED PROFESSIONAL ENGINEER
KEN HALLIS
No. C38203
Exp. 3-31-17
STATE OF CALIFORNIA

THE STATE OF CALIFORNIA OR ITS OFFICERS OR AGENTS SHALL NOT BE RESPONSIBLE FOR THE ACCURACY OR COMPLETENESS OF ELECTRONIC COPIES OF THIS PLAN SHEET.

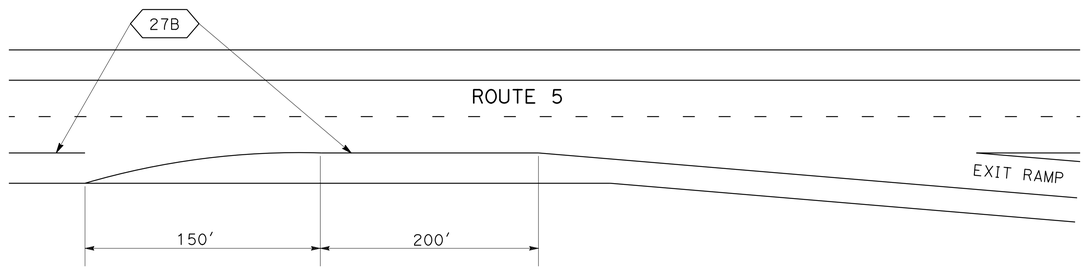

EDGE LINE FLAIR DETAIL

PAVEMENT DELINEATION DETAILS

NO SCALE

PDD-2

REVISED BY | DATE REVISED

DAN BROWN | KEN HALLIS

CALCULATED-DESIGNED BY | CHECKED BY

FUNCTIONAL SUPERVISOR: ERIC ORR

STATE OF CALIFORNIA - DEPARTMENT OF TRANSPORTATION
Caltrans
DESIGN

P:\proj1\02\4F58u_plans\pse\24f58unb002.dgn

LAST REVISION 04-11-16 | DATE PLOTTED => 21-JUN-2016 | TIME PLOTTED => 13:51

Dist	COUNTY	ROUTE	POST MILES TOTAL PROJECT	SHEET No.	TOTAL SHEETS
02	Sis	5	R57.8/R58.5	44	106

REGISTERED CIVIL ENGINEER DATE 06-10-16

PLANS APPROVAL DATE 06-15-16

REGISTERED PROFESSIONAL ENGINEER KEN HALLIS No. C38203 Exp. 3-31-17 STATE OF CALIFORNIA

THE STATE OF CALIFORNIA OR ITS OFFICERS OR AGENTS SHALL NOT BE RESPONSIBLE FOR THE ACCURACY OR COMPLETENESS OF ELECTRONIC COPIES OF THIS PLAN SHEET.

PAVEMENT DELINEATION QUANTITIES

PD SHEET	STATION	THERMOPLASTIC TRAFFIC STRIPE (SPRAYABLE) 4" WHITE DETAIL 12 LF	4" YELLOW DETAIL 25 LF	4" WHITE DETAIL 27B LF	8" WHITE DETAIL 36 LF	* PAVEMENT MARKER (RETROREFLECTIVE) EA	REMARKS
1	"C" 778+50 TO "C" 783+66	516				12	NB TRAFFIC STRIPES AND RECESSED MARKERS
1	"C" 778+50 TO "C" 781+50		300	300		8	
2	"C" 783+66 TO "C" 788+36	470				11	
3	"C" 805+50 TO "C" 811+00	550				13	
3	"C" 808+50 TO "C" 811+13			263			
3	"C" 810+62 TO "C" 811+25				63	5	
4	"C" 811+25 TO "C" 813+52				227	15	
4	"C" 811+25 TO "C" 812+00				75	5	
4	"C" 813+52 TO "CN" 819+60			608			
4	"CN" 811+48 TO "CN" 812+95	147				5	
4	"CN" 811+48 TO "CN" 819+60		812			18	
4	"CS" 815+50 TO "CS" 817+00	150				5	SB TRAFFIC STRIPES AND RECESSED MARKERS
4	"CS" 815+50 TO "CS" 823+40			790			
4	"CS" 819+66 TO "CS" 823+40		374			9	
5	"CN" 819+60 TO "CN" 832+50			1290			NB TRAFFIC STRIPES
5	"CN" 819+60 TO "CN" 832+25		1265			28	
5	"CS" 823+40 TO "CS" 836+50		1310	1310		29	SB TRAFFIC STRIPES
6	"CN" 832+50 TO "CN" 836+50			400			NB TRAFFIC STRIPES AND RECESSED MARKERS
6	"CN" 834+50 TO "CN" 836+50	200				6	
6	"CS" 836+50 TO "CS" 838+50		200			6	SB TRAFFIC STRIPES AND RECESSED MARKERS
6	"CS" 836+50 TO "CS" 849+42	1292				28	
6	"CS" 836+50 TO "CS" 837+00			50			
6	"CS" 837+00 TO "CS" 839+94				294	18	
6	"CS" 839+00 TO "CS" 841+50			250			
7	"CS" 849+42 TO "CS" 853+50	408				9	
7	"CS" 850+50 TO "CS" 853+50		300				
7	"CS" 850+50 TO "CS" 853+50			300			
	SUBTOTAL	3733	4561	5561	659	230	
	TOTAL	14,514				230	

* PAVEMENT MARKERS (RETRO-REFLECTIVE) TO BE PLACED IN EXISTING RECESSES

OBJECT MARKERS

STATION	OBJECT MARKER (TYPE P) EA STAGE 1	EA STAGE 2
"CN" 815+53, 38.5' R†	1	1
"CS" 833+91, 34.0' L†	1	1
TOTAL	4	

PAVEMENT DELINEATION QUANTITIES

PDQ-1

REVISED BY | DATE REVISED

DAN BROWN | KEN HALLIS

CALCULATED-DESIGNED BY | CHECKED BY

FUNCTIONAL SUPERVISOR: ERIC ORR

STATE OF CALIFORNIA - DEPARTMENT OF TRANSPORTATION

Caltrans DESIGN

P:\proj1\02\4F58u_plans\pse\24f58unc001.dgn

LAST REVISION 04-11-16 | DATE PLOTTED => 21-JUN-2016 | TIME PLOTTED => 13:51

Dist	COUNTY	ROUTE	POST MILES TOTAL PROJECT	SHEET No.	TOTAL SHEETS
02	Sis	5	R57.8/R58.5	45	106

REGISTERED CIVIL ENGINEER DATE 06-10-16

PLANS APPROVAL DATE 06-15-16

REGISTERED PROFESSIONAL ENGINEER KEN HALLIS No. C38203 Exp. 3-31-17 STATE OF CALIFORNIA

THE STATE OF CALIFORNIA OR ITS OFFICERS OR AGENTS SHALL NOT BE RESPONSIBLE FOR THE ACCURACY OR COMPLETENESS OF ELECTRONIC COPIES OF THIS PLAN SHEET.

NOTE:

1. (N) - NOT A SEPARATE PAY ITEM, FOR INFORMATION ONLY.

W-BEAM GUARDRAIL QUANTITIES

LAYOUT SHEET No.	DIRECTION	STATION	TREATED WOOD WASTE	REMOVE GUARDRAIL	RECONSTRUCT GUARDRAIL (9' POST)	RECONSTRUCT GUARDRAIL	RECONSTRUCT TERMINAL SYSTEM	RECONSTRUCT TRANSITION RAILING	MIDWEST GUARDRAIL SYSTEM (7' STEEL POST)	RECONSTRUCT END ANCHOR (TYPE SFT)	REMARKS
			LB	LF	LF	LF	EA	EA	LF	EA	
L-1	NB	"CN" 815+53 TO 816+16				63					RIGHT
L-1	NB	"CN" 815+53					1				RIGHT
L-1	NB	"CN" 816+16 TO 816+41	172					1			RIGHT
L-1	SB	"CS" 819+56 TO 820+17				61					LEFT
L-1	SB	"CS" 819+56								1	LEFT
L-2	NB	"CN" 818+07 TO 818+55				49					RIGHT
L-2	NB	"CN" 818+03 TO 818+55				52					LEFT
L-2	NB	"CN" 820+11 TO 820+63				50					RIGHT
L-2	NB	"CN" 820+11 TO 820+63				50					LEFT
L-2	NB	"CN" 820+63 TO 820+85	344					2			RIGHT AND LEFT
L-2	SB	"CS" 821+78 TO 822+03						2			RIGHT AND LEFT
L-2	SB	"CS" 822+03 TO 822+27				25					RIGHT
L-2	SB	"CS" 822+03 TO 822+52				50					LEFT
L-2	SB	"CS" 822+02	344								RIGHT AND LEFT
L-2	SB	"CS" 823+73 TO 824+23				52					RIGHT
L-2	SB	"CS" 823+73 TO 824+23				52					LEFT
L-4	SB	"CS" 833+40 TO 833+63			25						RIGHT
L-4	SB	"CS" 833+16 TO 833+40	172					2			RIGHT
L-4	SB	"CS" 833+41	172								LEFT
L-4	SB	"CS" 833+41 TO 833+91			50						
L-4	SB	"CS" 832+91					1				LEFT
L-5	NB	"CN" 832+91 TO 835+03	1376	213					213		MGS (7' POST)
L-5	NB	"CN" 832+91 TO 835+03								1	RIGHT
		TOTAL	2580	213	75	504	2	7	213	2	

TEMPORARY WATER POLLUTION CONTROL

DESCRIPTION	TEMPORARY DRAINAGE INLET PROTECTION	TEMPORARY FIBER ROLL	TEMPORARY CONCRETE WASHOUT
	EA	LF	LS
STORMWATER ITEMS	3	220	1
TOTAL	3	220	1

MINOR CONCRETE (Misc CONSTRUCTION)

LOCATION	CY
CONTROLLER EQUIPMENT PAD	1.6
TOTAL	1.6

CONCRETE BARRIER

STATION	REMOVE CONCRETE BARRIER	CONCRETE BARRIER (TYPE 60)
	LF	LF
"CN" 816+28.14 TO 816+53.11	25	
"CN" 816+28.11 TO 816+41.11		13
TOTAL	25	13

SHOULDER RUMBLE STRIP (CONCRETE PAVEMENT, GROUND-IN INDENTATIONS)

STATION	STA
"CS" 816+00 TO 819+94	3.94
"CN" 812+00 TO 816+22	4.22
"CS" 822+99 TO 823+87	.88
"CN" 818+27 TO 820+50	2.23
TOTAL	11.27

SHOULDER RUMBLE STRIP (HMA, GROUND-IN INDENTATIONS)

STATION	STA
"CS" 833+49 TO 838+00	4.51
"CN" 833+12 TO 836+92	3.80
TOTAL	8.31

ROADWAY QUANTITIES

STATION RANGE/LOCATION	CLASS 2 AGGREGATE BASE	HOT MIX ASPHALT (TYPE A)	MINOR HOT MIX ASPHALT	PLACE HMA DIKE (TYPE F)	PLACE HMA (Misc AREA)	RAIL ELEMENT WALL	COMMENTS
	CY	TON	TON	LF	SQYD	SQFT	
"CN" 832+92.12 TO 833+42.12	5.0					100	EARTH RETAINING SYSTEM
"CN" 820+63 TO 820+84.71		2.2		22			
"CN" 832+92.12 TO 835+03		6.4		211	10		
CONTROLLER EQUIPMENT PAD	1.6						
STAGE CONSTRUCTION		59.0					
TOTAL	6.6	67.6	4	233	10	100	

DRAINAGE QUANTITIES

PLAN SHEET No.	STATION	DRAINAGE SYSTEM No. ⬡	DRAINAGE ITEM ◯	8" CORRUGATED STEEL PIPE DOWNDRAIN (.079" THICK)	8" ENTRANCE TAPER	8" ANCHOR ASSEMBLY	COMMENTS
				LF	EA	EA	
L-2	"CN" 820+86	1	a		1		
			b	10			
			c			1	
L-5	"CN" 833+44.85	2	a		1		TYPE 1 - ALTERNATIVE A
			b	50			
			c			4	
TOTAL				60	2	5	

SUMMARY OF QUANTITIES Q-1

REVISED BY | DATE REVISED

DAN BROWN | KEN HALLIS

CALCULATED-DESIGNED BY | CHECKED BY

FUNCTIONAL SUPERVISOR: ERIC ORR

STATE OF CALIFORNIA - DEPARTMENT OF TRANSPORTATION

Caltrans DESIGN

P:\proj1\02\4f58u_plans\pse\24f58upa001.dgn

LAST REVISION 04-11-16 | DATE PLOTTED => 21-JUN-2016 | TIME PLOTTED => 13:51

Dist	COUNTY	ROUTE	POST MILES TOTAL PROJECT	SHEET No.	TOTAL SHEETS
02	Sis	5	R57.8/R58.5	46	106

REGISTERED ELECTRICAL ENGINEER 06-10-16 DATE

PLANS APPROVAL DATE 06-15-16

REGISTERED PROFESSIONAL ENGINEER J.M. HANNIGAN No. E13665 Exp. 6-30-17 ELECTRICAL STATE OF CALIFORNIA

THE STATE OF CALIFORNIA OR ITS OFFICERS OR AGENTS SHALL NOT BE RESPONSIBLE FOR THE ACCURACY OR COMPLETENESS OF SCANNED COPIES OF THIS PLAN SHEET.

NOTE:

1. FOR ACCURATE RIGHT OF WAY AND ACCESS DATA, CONTACT RIGHT OF WAY ENGINEERING AT THE DISTRICT OFFICE.

LEGEND (THIS SHEET):

1 Exist 2"C, ADD 2#8 (BLACK AND WHITE - RWIS), 2#8 (BLUE AND WHITE - RWIS), 1#8 G.

2 COIL 30' OF CONDUCTORS IN THE PULL BOX CLOSEST TO THE Exist RWIS DISCONNECTS.

LEGEND:

(pb) Exist OBJECT MARKER (TYPE PB)

(PB) OBJECT MARKER (TYPE PB) AND PULL BOX PAVING

COLLIER SAFETY REST AREA

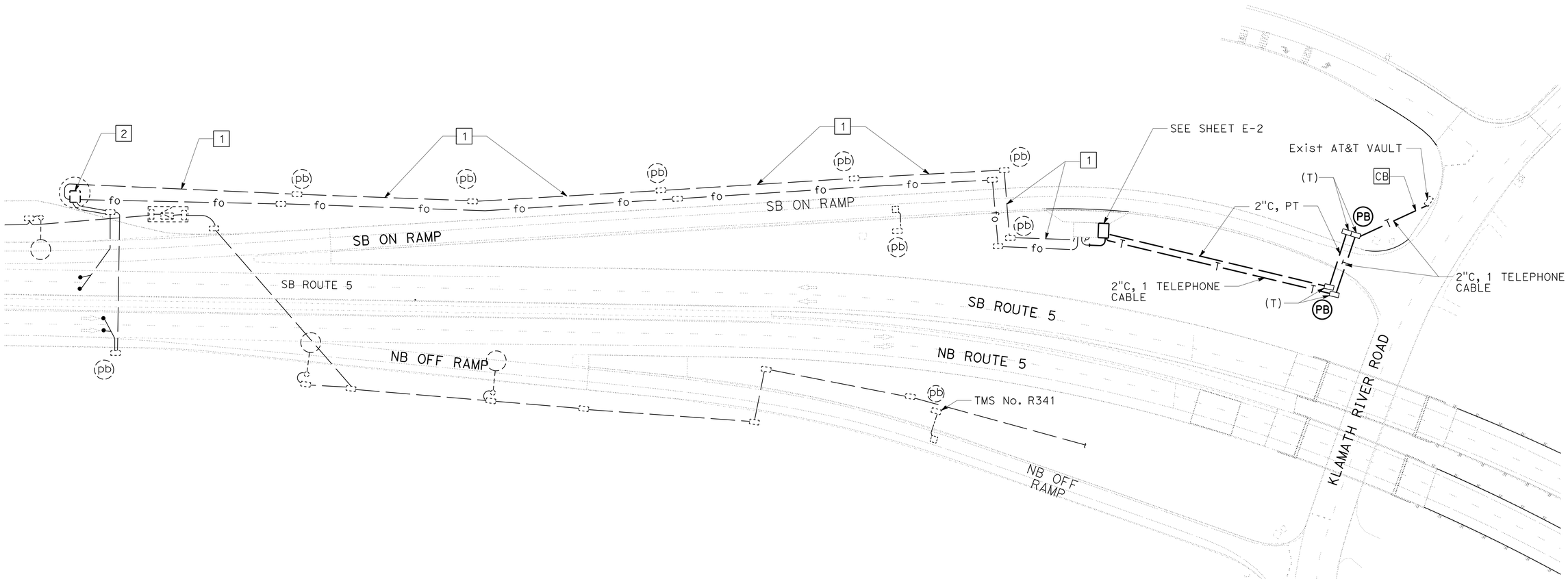

MODIFY CLOSED CIRCUIT TELEVISION SYSTEM

APPROVED FOR ELECTRICAL WORK ONLY

MODIFYING EXISTING ELECTRICAL SYSTEM

SCALE: 1" = 50'

E-1

J.M. HANNIGAN — ARTURO P. ROBLES — CALCULATED-DESIGNED BY — CHECKED BY — REVISED BY — DATE REVISED

FUNCTIONAL SUPERVISOR: ROB STINGER

STATE OF CALIFORNIA - DEPARTMENT OF TRANSPORTATION — Caltrans — ELECTRICAL DESIGN

P:\proj\02\4f58u_plans\pse\24f58uua001.dgn

DATE PLOTTED => 21-JUN-2016
TIME PLOTTED => 13:51

LAST REVISION

BORDER LAST REVISED 7/2/2010 | USERNAME => S123119 | DGN FILE => 24f58uua001.dgn | RELATIVE BORDER SCALE IS IN INCHES 0 1 2 3 | UNIT 0147 | PROJECT NUMBER & PHASE 02 1500 0021 1

Dist	COUNTY	ROUTE	POST MILES TOTAL PROJECT	SHEET No.	TOTAL SHEETS
02	Sis	5	R57.8/R58.5	47	106

REGISTERED ELECTRICAL ENGINEER 06-10-16 DATE

06-15-16
PLANS APPROVAL DATE

REGISTERED PROFESSIONAL ENGINEER J.M. HANNIGAN No. E13665 Exp. 6-30-17 ELECTRICAL STATE OF CALIFORNIA

THE STATE OF CALIFORNIA OR ITS OFFICERS OR AGENTS SHALL NOT BE RESPONSIBLE FOR THE ACCURACY OR COMPLETENESS OF SCANNED COPIES OF THIS PLAN SHEET.

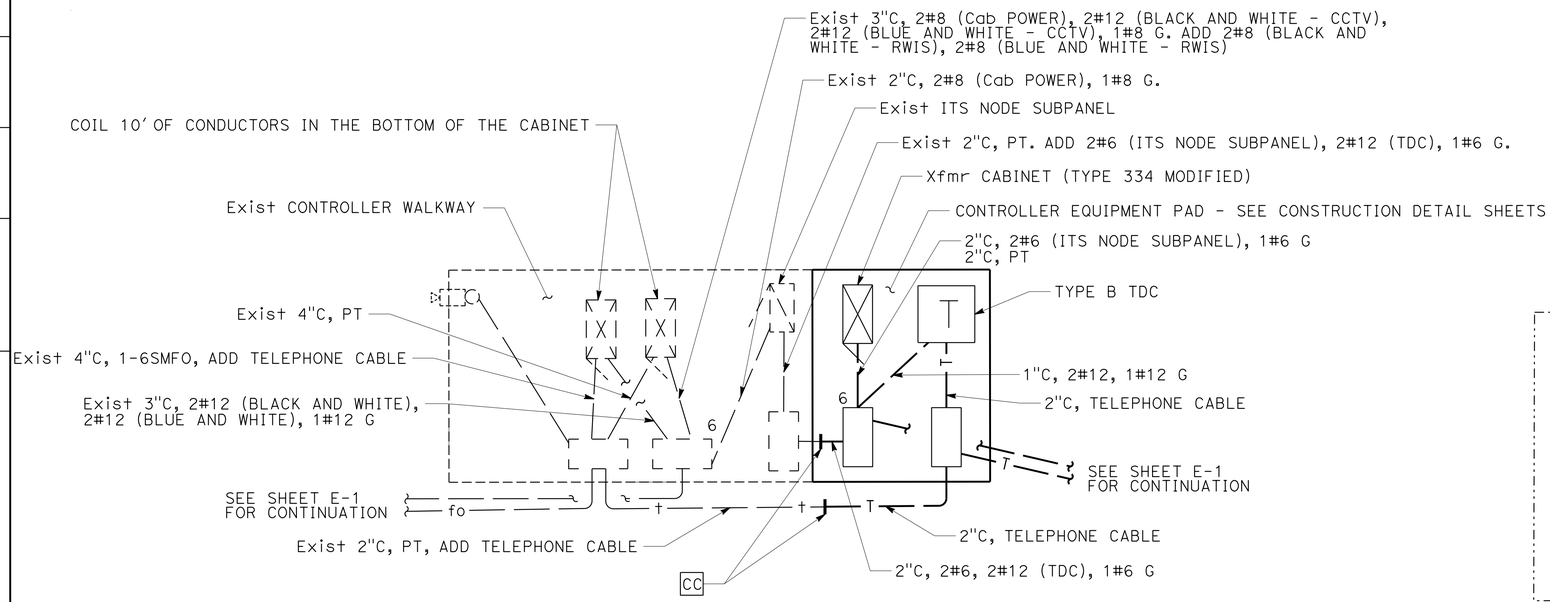

CONTROLLER EQUIPMENT DETAIL

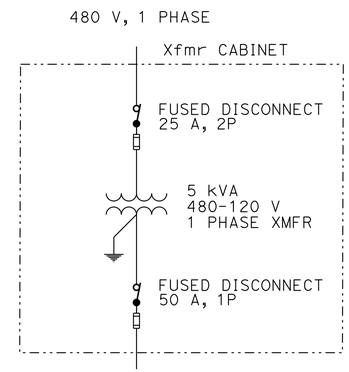

Xfmr CABINET SINGLE-LINE DIAGRAM

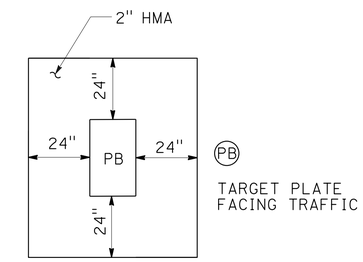

NOTE: APPLIES TO ALL INSTALLATIONS IN UNPAVED AREAS

PULL BOX PAVING

NO SCALE

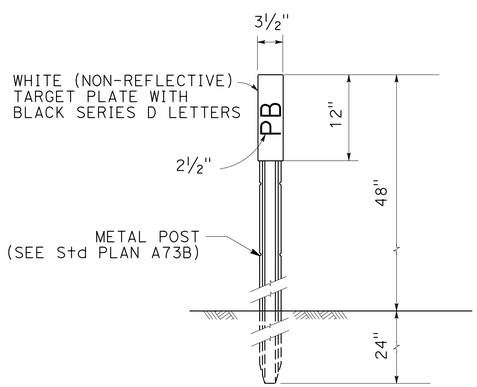

NOTE: PLACE MARKER 2" OUTSIDE PULL BOX PAVING ON SIDE FACING TRAFFIC. SEE PULL BOX PAVING DETAIL. INSTALL SNOW POLE BRACKET.

OBJECT MARKER (TYPE PB)

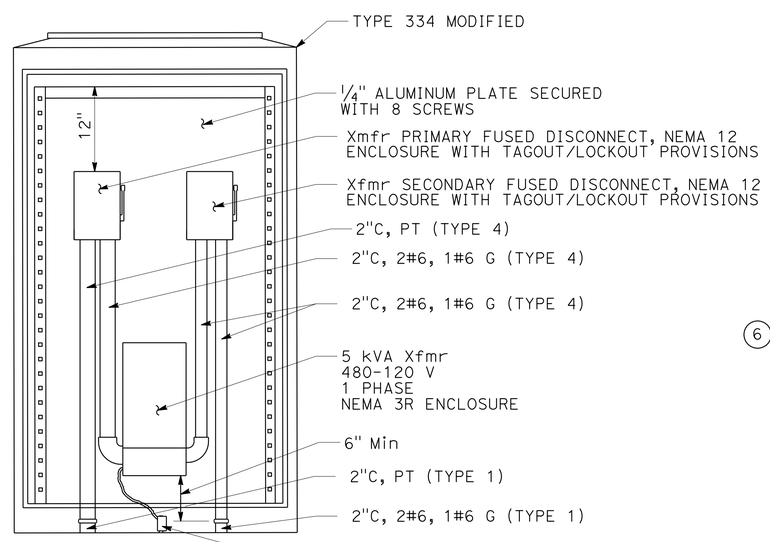

NOTE: PLACE SELF STICKING WARNING LABEL MEETING ASME (ANSI) STANDARD ZG3.22 ON OUTER CABINET DOOR. CHARACTERS MUST BE 1⅞" IN HEIGHT AND READ "480 VOLTS".

XFMR CABINET DETAIL

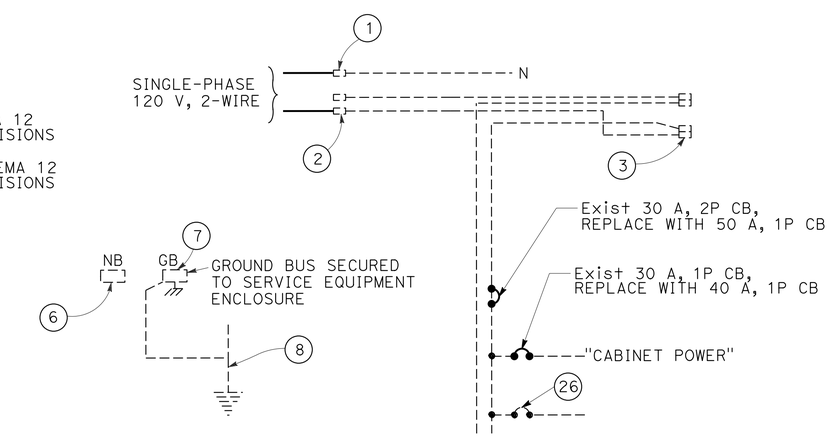

Exist ITS NODE SUBPANEL

ELECTRICAL DETAILS

NO SCALE

E-2

REVISED BY	DATE REVISED

CALCULATED-DESIGNED BY: J.M. HANNIGAN
CHECKED BY: ARTURO P. ROBLES
FUNCTIONAL SUPERVISOR: ROB STINGER

STATE OF CALIFORNIA - DEPARTMENT OF TRANSPORTATION
Caltrans® ELECTRICAL DESIGN

P:\proj1\02\4F58u_plans\pse\24f58uua002.dgn

LAST REVISION
DATE PLOTTED => 21-JUN-2016
TIME PLOTTED => 13:51

Dist	COUNTY	ROUTE	POST MILES TOTAL PROJECT	SHEET No.	TOTAL SHEETS
02	Sis	5	R57.8/R58.5	48	106

J. Hannigan 06-10-16
REGISTERED ELECTRICAL ENGINEER DATE

06-15-16
PLANS APPROVAL DATE

REGISTERED PROFESSIONAL ENGINEER
J.M. HANNIGAN
No. E13665
Exp. 6-30-17
ELECTRICAL
STATE OF CALIFORNIA

THE STATE OF CALIFORNIA OR ITS OFFICERS OR AGENTS SHALL NOT BE RESPONSIBLE FOR THE ACCURACY OR COMPLETENESS OF SCANNED COPIES OF THIS PLAN SHEET.

NOTE:

1. ITEMS SHOWN IN THIS TABLE ARE NOT SEPARATE PAY ITEMS, FOR INFORMATION ONLY.

MODIFY CLOSED CIRCUIT TELEVISION SYSTEM

SHEET No.	TRENCHING AND BACKFILL	1" TYPE 3 CONDUIT	2" TYPE 3 CONDUIT	No. 5 PULL BOX	No. 5 TRAFFIC PULL BOX	No. 6 PULL BOX	OBJECT MARKER (TYPE PB) AND PULL BOX PAVING	No. 12 CONDUCTOR	No. 12 GROUND	No. 8 CONDUCTOR	No. 8 GROUND	No. 6 CONDUCTOR	No. 6 GROUND	TELEPHONE CABLE	Xfmr CABINET (TYPE 334L MODIFIED)	5 kVA Xfmr	FUSED DISCONNECTS	TYPE B TDC	CIRCUIT BREAKERS
	LF	LF	LF	EA	EA	EA	EA	LF	LF	LF	LF	LF	LF	LF	EA	EA	EA	EA	EA
E-1	500	-	1000	-	4	-	2	-	-	4400	1100	-	-	400	-	-	-	-	-
E-2	50	20	50	1	-	1	-	60	30	-	-	60	30	50	1	1	2	1	2

ELECTRICAL QUANTITIES

E-3

REVISED BY	DATE REVISED

CALCULATED-DESIGNED BY	CHECKED BY
J.M. HANNIGAN	ARTURO P. ROBLES

FUNCTIONAL SUPERVISOR: ROB STINGER

STATE OF CALIFORNIA - DEPARTMENT OF TRANSPORTATION
Caltrans ELECTRICAL DESIGN

P:\proj1\02\4f58u_plans\pse\24f58uua003.dgn

LAST REVISION DATE PLOTTED => 21-JUN-2016
TIME PLOTTED => 13:51

M

Maint	MAINTENANCE
Max	MAXIMUM
MB	METAL BEAM
MBB	METAL BEAM BARRIER
MBGR	METAL BEAM GUARD RAILING
Med	MEDIAN
MGS	MIDWEST GUARDRAIL SYSTEM
MH	MANHOLE
Min	MINIMUM
Misc	MISCELLANEOUS
Misc I & S	MISCELLANEOUS IRON AND STEEL
Mkr	MARKER
Mod	MODIFIED,
	MODIFY
Mon	MONUMENT
MP	METAL PLATE
MPGR	METAL PLATE GUARD RAILING
MR	MOVEMENT RATING
MSE	MECHANICALLY STABILIZED EMBANKMENT
Mt	MOUNTAIN, MOUNT
Mtl	MATERIAL
MVP	MAINTENANCE VEHICLE PULLOUT

N

N	NORTH
NB	NORTHBOUND
No.	NUMBER (MUST HAVE PERIOD)
Nos.	NUMBERS (MUST HAVE PERIOD)
NPS	NOMINAL PIPE SIZE
NS	NEAR SIDE
NSP	NEW STANDARD PLAN
NTS	NOT TO SCALE

O

Oblr	OBLITERATE
OC	OVERCROSSING
OD	OUTSIDE DIAMETER
OF	OUTSIDE FACE
OG	ORIGINAL GROUND
OGAC	OPEN GRADED ASPHALT CONCRETE
OGFC	OPEN GRADED FRICTION COURSE
OH	OVERHEAD
OHWM	ORDINARY HIGH WATER MARK
O-O	OUT TO OUT
Opp	OPPOSITE
OSD	OVERSIDE DRAIN

P

p	PAGE
PAP	PERFORATED ALUMINUM PIPE
PB	PULL BOX
PC	POINT OF CURVATURE,
	PRECAST
PCC	POINT OF COMPOUND CURVE,
	PORTLAND CEMENT CONCRETE
PCMS	PORTABLE CHANGEABLE MESSAGE SIGN
PCP	PERFORATED CONCRETE PIPE,
	PRESTRESSED CONCRETE PIPE
PCVC	POINT OF COMPOUND VERTICAL CURVE
PEC	PERMIT TO ENTER AND CONSTRUCT
Ped	PEDESTRIAN
Ped OC	PEDESTRIAN OVERCROSSING
Ped UC	PEDESTRIAN UNDERCROSSING
Perm Mtl	PERMEABLE MATERIAL

P continued

PG	PROFILE GRADE
PI	POINT OF INTERSECTION
PJP	PARTIAL JOINT PENETRATION
Pkwy	PARKWAY
ℙ,PL	PLATE
P/L	PROPERTY LINE
PM	POST MILE,
	TIME FROM NOON TO MIDNIGHT
PN	PAVING NOTCH
POC	POINT OF HORIZONTAL CURVE
POT	POINT OF TANGENT
POVC	POINT OF VERTICAL CURVE
PP	PIPE PILE,
	PLASTIC PIPE,
	POWER POLE
PPL	PREFORMED PERMEABLE LINER
PPP	PERFORATED PLASTIC PIPE
PRC	POINT OF REVERSE CURVE
PRF	PAVEMENT REINFORCING FABRIC
PRVC	POINT OF REVERSE VERTICAL CURVE
PS&E	PLANS, SPECIFICATIONS AND ESTIMATES
PS, P/S	PRESTRESSED
PSP	PERFORATED STEEL PIPE
PT	POINT OF TANGENCY
PVC	POLYVINYL CHLORIDE
Pvmt	PAVEMENT

Q

Qty	QUANTITY

R

R	RADIUS
R & D	REMOVE AND DISPOSE
R & S	REMOVE AND SALVAGE
R/C	RATE OF CHANGE
RCA	REINFORCED CONCRETE ARCH
RCB	REINFORCED CONCRETE BOX
RCP	REINFORCED CONCRETE PIPE
RCPA	REINFORCED CONCRETE PIPE ARCH
Rd	ROAD
Reinf	REINFORCED,
	REINFORCEMENT,
	REINFORCING
Rel	RELOCATE
Repl	REPLACEMENT
Ret	RETAINING
Rev	REVISED, REVISION
Rdwy	ROADWAY
RHMA	RUBBERIZED HOT MIX ASPHALT
Riv	RIVER
RM	ROAD-MIXED
RP	RADIUS POINT,
	REFERENCE POINT
RR	RAILROAD
RSP	ROCK SLOPE PROTECTION,
	REVISED STANDARD PLAN
Rt	RIGHT
Rte	ROUTE
RW	REDWOOD,
	RETAINING WALL
R/W	RIGHT OF WAY
Rwy	RAILWAY

S

S	SOUTH,
	SUPPLEMENT
SAE	STRUCTURE APPROACH EMBANKMENT
Salv	SALVAGE
SAPP	STRUCTURAL ALUMINUM PLATE PIPE
SB	SOUTHBOUND
SC	SAND CUSHION
SCSP	SLOTTED CORRUGATED STEEL PIPE
SD	STORM DRAIN
Sec	SECOND,
	SECTION
Sep	SEPARATION
SG	SUBGRADE
Shld	SHOULDER
Sht	SHEET
Sim	SIMILAR
℄	STATION LINE
SM	SELECTED MATERIAL
Spec	SPECIAL,
	SPECIFICATIONS
SPP	SLOTTED PLASTIC PIPE
SS	SLOPE STAKE
SSBM	STRAP AND SADDLE BRACKET METHOD
SSD	STRUCTURAL SECTION DRAIN
SSPA	STRUCTURAL STEEL PLATE ARCH
SSPP	STRUCTURAL STEEL PLATE PIPE
SSPPA	STRUCTURAL STEEL PLATE PIPE ARCH
SSRP	STEEL SPIRAL RIB PIPE
St	STREET
Sta	STATION
STBB	SINGLE THRIE BEAM BARRIER
Std	STANDARD
Str	STRUCTURE
Surf	SURFACING
SW	SIDEWALK,
	SOUND WALL
Swr	SEWER
Sym	SYMMETRICAL
S4S	SURFACE 4 SIDES

T

T	SEMI-TANGENT
Tan	TANGENT
TBB	THRIE BEAM BARRIER
Tbr	TIMBER
TC	TOP OF CURB
TCB	TRAFFIC CONTROL BOX
TCE	TEMPORARY CONSTRUCTION EASEMENT
Tel	TELEPHONE
Temp	TEMPORARY
TG	TOP OF GRADE
Tot	TOTAL
TP	TELEPHONE POLE
TPB	TREATED PERMEABLE BASE
TPM	TREATED PERMEABLE MATERIAL
Trans	TRANSITION

T continued

TS	TRANSVERSE,
	TRAFFIC SIGNAL,
	TUBULAR STEEL
Typ	TYPICAL

U

UC	UNDERCROSSING
UD	UNDERDRAIN
UG	UNDERGROUND
UON	UNLESS OTHERWISE NOTED
UP	UNDERPASS

V

V	VALVE,
	DESIGN SPEED
Var	VARIABLE,
	VARIES
VC	VERTICAL CURVE
VCP	VITRIFIED CLAY PIPE
Vert	VERTICAL
Via	VIADUCT
Vol	VOLUME

W

W	WEST,
	WIDTH
WB	WESTBOUND
WH	WEEP HOLE
WM	WIRE MESH
WS	WATER SURFACE
WSP	WELDED STEEL PIPE
Wt	WEIGHT
WV	WATER VALVE
WW	WINGWALL
WWLOL	WINGWALL LAYOUT LINE

X

X Sec	CROSS SECTION
Xing	CROSSING

Y

Yr	YEAR
Yrs	YEARS

Dist	COUNTY	ROUTE	POST MILES TOTAL PROJECT	SHEET No.	TOTAL SHEETS
02	Sis	5	R57.8/R58.5	49	106

Grace M. Tsushima
REGISTERED CIVIL ENGINEER

July 19, 2013
PLANS APPROVAL DATE

REGISTERED PROFESSIONAL ENGINEER Grace M. Tsushima No. C49814 Exp. 9-30-14 CIVIL STATE OF CALIFORNIA

THE STATE OF CALIFORNIA OR ITS OFFICERS OR AGENTS SHALL NOT BE RESPONSIBLE FOR THE ACCURACY OR COMPLETENESS OF SCANNED COPIES OF THIS PLAN SHEET.

TO ACCOMPANY PLANS DATED 06-15-16

UNIT OF MEASUREMENT SYMBOLS:

Some of the symbols used in the project plan quantity tables and in the Bid Item List are:

TABLE A

SYMBOL USED	DEFINITIONS
ACRE	ACRE
CF	CUBIC FOOT
CY	CUBIC YARD
EA	EACH
GAL	GALLON
LB	POUND
LF	LINEAR FOOT
SQFT	SQUARE FOOT
SQYD	SQUARE YARD
STA	100 FEET
TAB	TABLET
TON	2,000 POUNDS

Some of the symbols used in the plans other than in the project plan quantity tables are:

TABLE B

SYMBOL USED	DEFINITIONS
ksi	KIPS PER SQUARE INCH
ksf	KIPS PER SQUARE FOOT
psi	POUNDS PER SQUARE INCH
psf	POUNDS PER SQUARE FOOT
lb/ft^3, pcf	POUNDS PER CUBIC FOOT
tsf	TONS PER SQUARE FOOT
mph, MPH *	MILES PER HOUR
ø	NOMINAL DIAMETER
oz	OUNCE
lb	POUND
kip	1,000 POUNDS
cal	CALORIE
ft	FOOT OR FEET
gal	GALLON

* For use on a sign panel only

STATE OF CALIFORNIA
DEPARTMENT OF TRANSPORTATION

ABBREVIATIONS (SHEET 2 OF 2)

NO SCALE

RSP A10B DATED JULY 19, 2013 SUPERSEDES STANDARD PLAN A10B DATED MAY 20, 2011 - PAGE 2 OF THE STANDARD PLANS BOOK DATED 2010.

REVISED STANDARD PLAN RSP A10B

2010 REVISED STANDARD PLAN RSP A10B

DATE PLOTTED => 21-JUN-2016
TIME PLOTTED => 13:51

Dist	COUNTY	ROUTE	POST MILES TOTAL PROJECT	SHEET No.	TOTAL SHEETS
02	Sis	5	R57.8/R58.5	50	106

Randell D. Hiatt
REGISTERED CIVIL ENGINEER

October 30, 2015
PLANS APPROVAL DATE

REGISTERED PROFESSIONAL ENGINEER
Randell D. Hiatt
No. C50200
Exp. 6-30-17
CIVIL
STATE OF CALIFORNIA

THE STATE OF CALIFORNIA OR ITS OFFICERS OR AGENTS SHALL NOT BE RESPONSIBLE FOR THE ACCURACY OR COMPLETENESS OF SCANNED COPIES OF THIS PLAN SHEET.

TO ACCOMPANY PLANS DATED 06-15-16

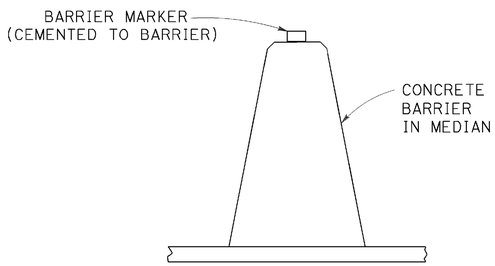

CONCRETE BARRIER TYPE 60 DELINEATION

See Note 5

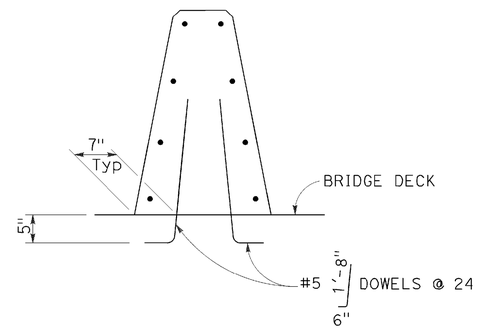

CONCRETE BARRIER TYPE 60A

Details similar to Type 60 except as noted.

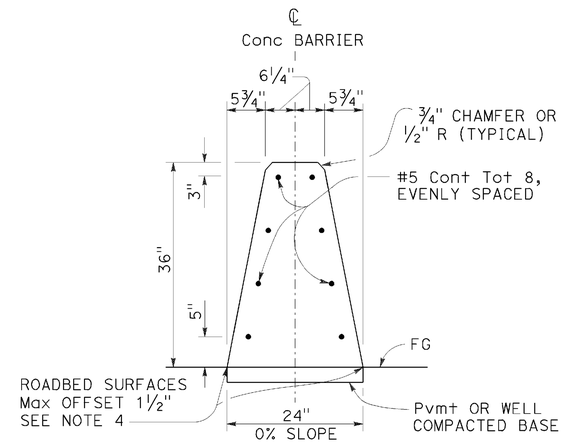

CONCRETE BARRIER TYPE 60

NOTES:

1. See Standard Plan A76B for details of Concrete Barrier Type 60 end anchors, connection to structures and transitions to Concrete Barrier Type 50 and Concrete Barrier Type 60S.
2. See Revised Standard Plan RSP A76C for Concrete Barrier Type 60 transitions at bridge column and sign pedestals.
3. Where glare screen is required on Concrete Barrier Type 60, use Concrete Barrier Type 60G.
4. Where roadbed offset is greater than 1½", see Concrete Barrier Type 60C.
5. See Project Plans for barrier delineation locations.
6. Reinforcing stirrup not required for roadbed offsets less than 1'-0".
7. For roadbed surfaces offset greater than 1½" and less than or equal to 3", no reinforcement required. For roadbed surfaces offset greater than 3" and less than or equal to 8", use two #4 Reinf at 3" above the lower roadbed surface. For roadbed surfaces offset greater than 8" and less than or equal to 12", use two #4 Reinf at 3" above the lower roadbed surface and two #4 Reinf at 8" above the lower roadbed surface. For roadbed surfaces offset greater than 12" and less than or equal to 36", use two #4 Reinf at 3" above the lower roadbed surface and two #4 Reinf at every 8" increment vertical spacing above the first two #4 Reinf.

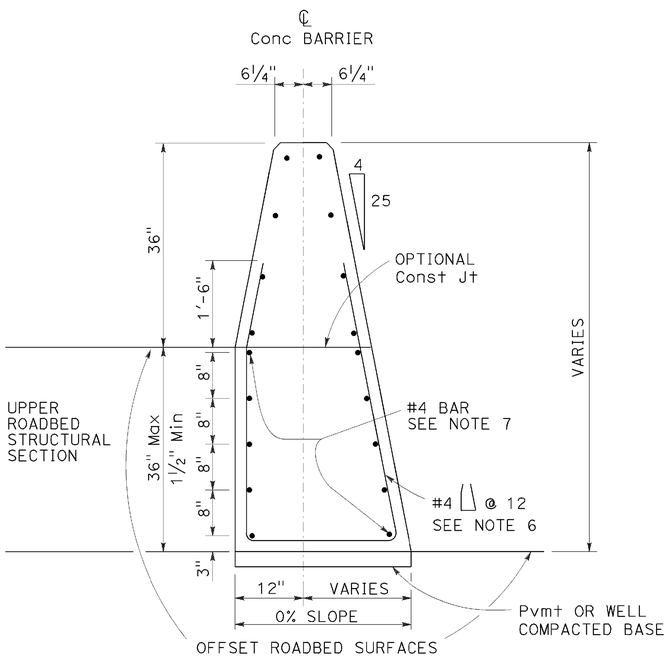

CONCRETE BARRIER TYPE 60C

Details similar to Type 60 except as noted.
Use concrete barrier end anchor when necessary.
36" roadbed surfaces offset shown.

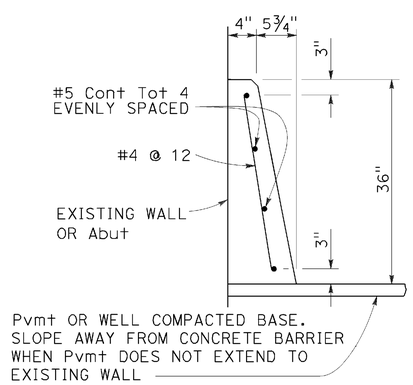

CONCRETE BARRIER TYPE 60D

STATE OF CALIFORNIA
DEPARTMENT OF TRANSPORTATION

CONCRETE BARRIER TYPE 60

NO SCALE

RSP A76A DATED OCTOBER 30, 2015 SUPERSEDES STANDARD PLAN A76A DATED MAY 20, 2011 - PAGE 34 OF THE STANDARD PLANS BOOK DATED 2010.

REVISED STANDARD PLAN RSP A76A

2010 REVISED STANDARD PLAN RSP A76A

DATE PLOTTED => 21-JUN-2016
TIME PLOTTED => 13:51

Dist	COUNTY	ROUTE	POST MILES TOTAL PROJECT	SHEET No.	TOTAL SHEETS
02	Sis	5	R57.8/R58.5	51	106

Randell D. Hiatt
REGISTERED CIVIL ENGINEER

July 19, 2013
PLANS APPROVAL DATE

REGISTERED PROFESSIONAL ENGINEER Randell D. Hiatt No. C50200 Exp. 6-30-15 CIVIL STATE OF CALIFORNIA

THE STATE OF CALIFORNIA OR ITS OFFICERS OR AGENTS SHALL NOT BE RESPONSIBLE FOR THE ACCURACY OR COMPLETENESS OF SCANNED COPIES OF THIS PLAN SHEET.

TO ACCOMPANY PLANS DATED 06-15-16

2010 REVISED STANDARD PLAN RSP A77L2

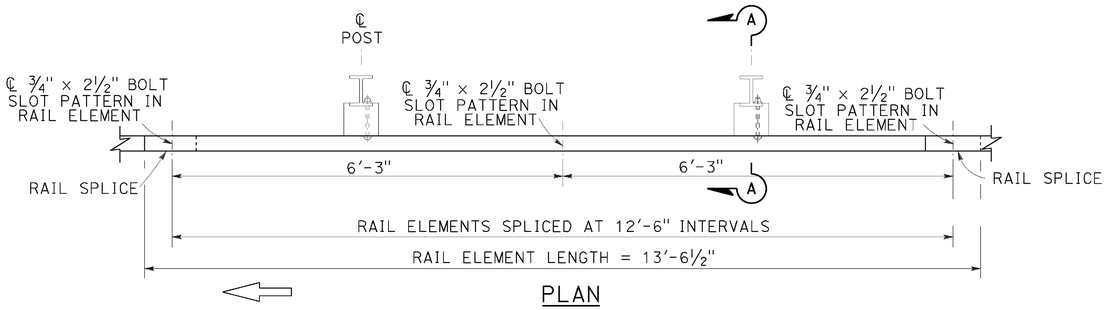

PLAN

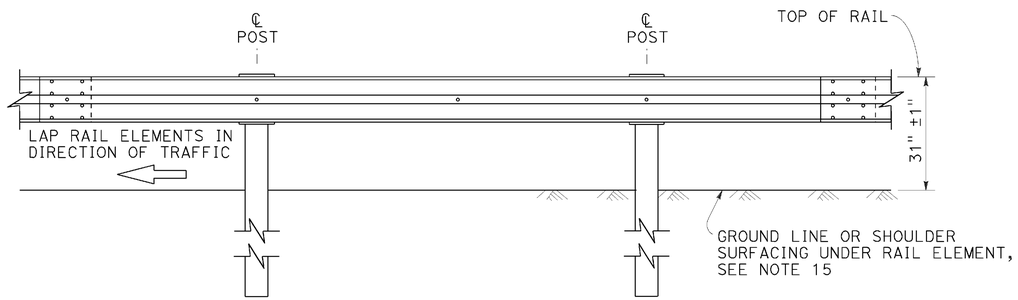

ELEVATION

MIDWEST GUARDRAIL SYSTEM WITH STEEL POSTS AND NOTCHED WOOD OR NOTCHED RECYCLED PLASTIC BLOCKS

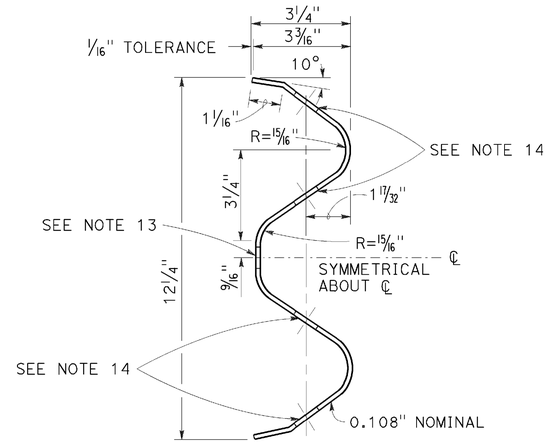

SECTION THRU RAIL ELEMENT

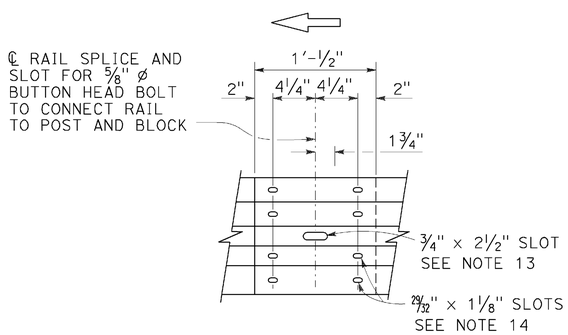

ELEVATION

RAIL ELEMENT SPLICE DETAIL

a) Connect the over lapped end of the rail elements with ⅝" ø × 1⅜" button head oval shoulder splice bolts inserted into the 29⁄32" × 1⅛" slots and bolted together with ⅝" ø recessed hex nuts. Recess of hex nut points toward rail element. A total of 8 bolts and nuts are to be used at each rail splice connection.

b) The ends of the rail elements are to be overlapped in the direction of traffic (see details).

c) Where end cap is to be attached to the end of a rail element, a total of 4 of the above described splice bolts and nuts are to be used.

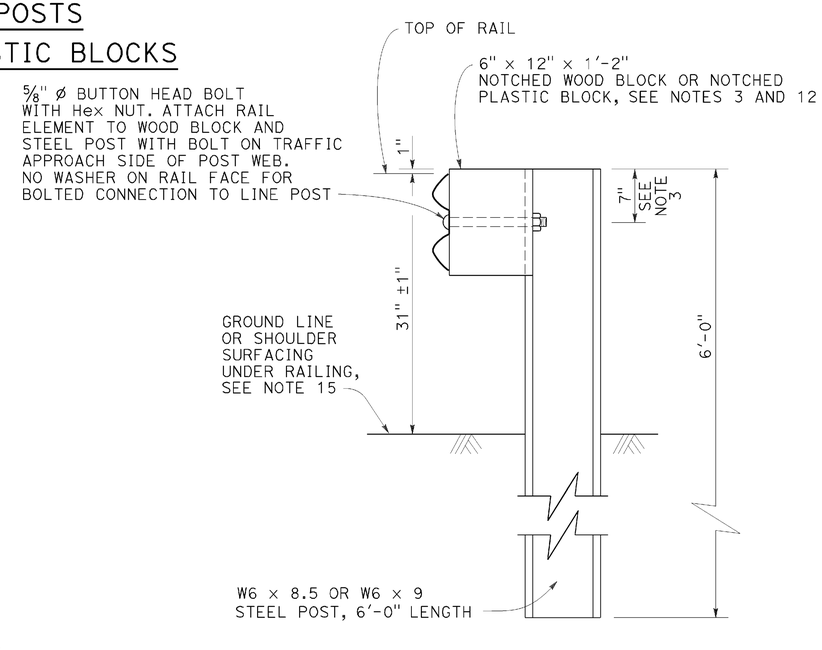

SECTION A-A

TYPICAL STEEL LINE POST INSTALLATION

See Note 4

NOTES:

1. For details of wood post installations, see Revised Standard Plan RSP A77L1.
2. For details of standard hardware used to construct MGS, see Revised Standard Plan RSP A77M1.
3. For details of steel posts and notched wood blocks used to construct MGS, see Revised Standard Plan RSP A77N2.
4. For additional installation details, see Revised Standard Plan RSP A77N3.
5. MGS post spacing to be 6'-3" center to center, except as otherwise noted.
6. For MGS typical layouts, see the A77P, A77Q and A77R Series of Standard Plans.
7. If railing is connected to terminal system end treatment, use 31" height terminal system end treatment.
8. For MGS end anchor details, see Revised Standard Plans RSP A77S1 and RSP A77T2.
9. For details of MGS transition to bridge railing, see Revised Standard Plan RSP A77U4.
10. For additional details of MGS connection to bridge railings, see Revised Standard Plans RSP A77U1, RSP A77U2 and RSP A77V1.
11. For dike positioning and MGS delineation details, see Revised Standard Plan RSP A77N4.
12. Notched face of block faces steel post.
13. Slotted hole for bolted connection of rail element to block and post. See "Section Thru Rail Element".
14. Slotted holes for splice bolts to overlap ends of rail element. See "Section Thru Rail Element".
15. Install posts in soil.

STATE OF CALIFORNIA
DEPARTMENT OF TRANSPORTATION

MIDWEST GUARDRAIL SYSTEM STANDARD RAILING SECTION (STEEL POST WITH NOTCHED WOOD OR NOTCHED RECYCLED PLASTIC BLOCK)

NO SCALE

RSP A77L2 DATED JULY 19, 2013 SUPPLEMENTS THE STANDARD PLANS BOOK DATED 2010.

REVISED STANDARD PLAN RSP A77L2

DATE PLOTTED => 21-JUN-2016
TIME PLOTTED => 13:52

Dist	COUNTY	ROUTE	POST MILES TOTAL PROJECT	SHEET No.	TOTAL SHEETS
02	Sis	5	R57.8/R58.5	52	106

Randell D. Hiatt
REGISTERED CIVIL ENGINEER

July 19, 2013
PLANS APPROVAL DATE

REGISTERED PROFESSIONAL ENGINEER Randell D. Hiatt No. C50200 Exp. 6-30-15 CIVIL STATE OF CALIFORNIA

THE STATE OF CALIFORNIA OR ITS OFFICERS OR AGENTS SHALL NOT BE RESPONSIBLE FOR THE ACCURACY OR COMPLETENESS OF SCANNED COPIES OF THIS PLAN SHEET.

TO ACCOMPANY PLANS DATED 06-15-16

2010 REVISED STANDARD PLAN RSP A77L3

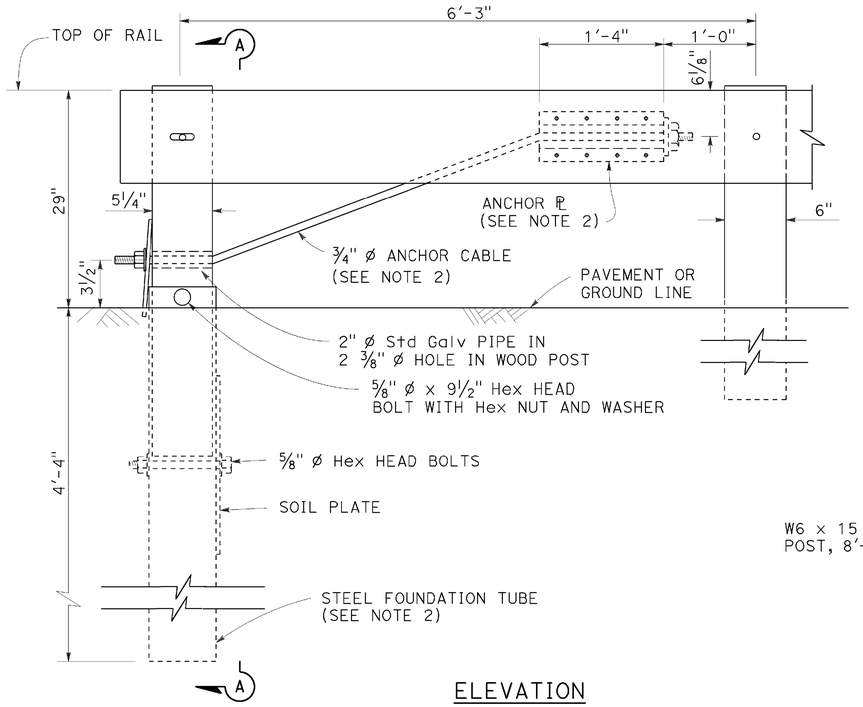

ELEVATION
END ANCHOR
ASSEMBLY (TYPE SFT)

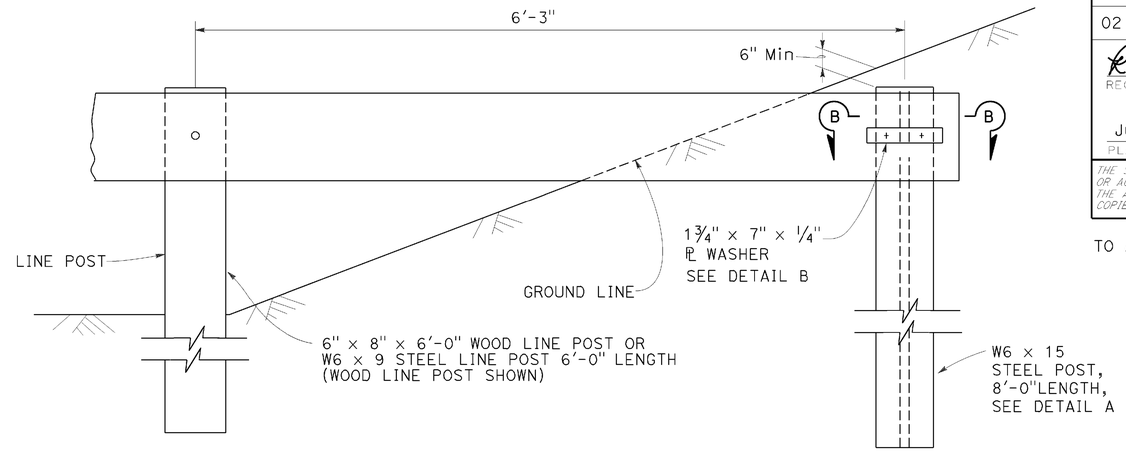

BURIED POST END ANCHOR

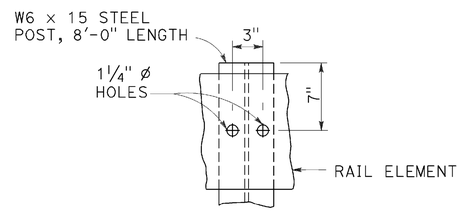

DETAIL A

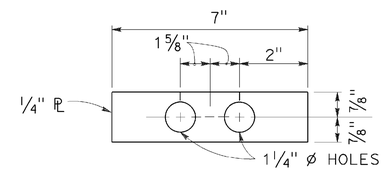

DETAIL B

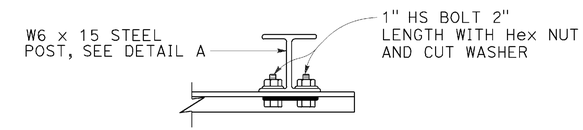

SECTION B-B

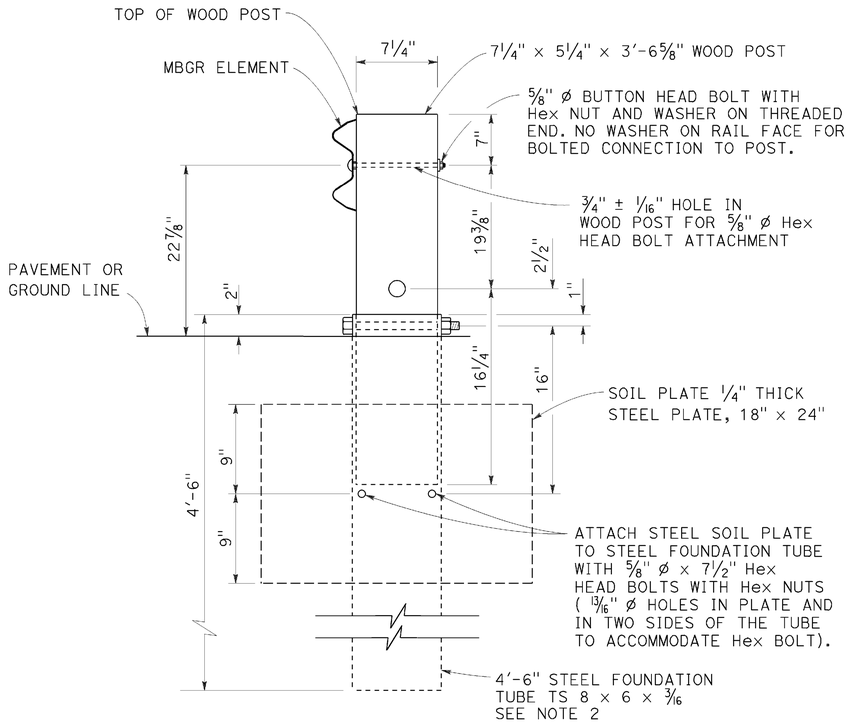

SECTION A-A

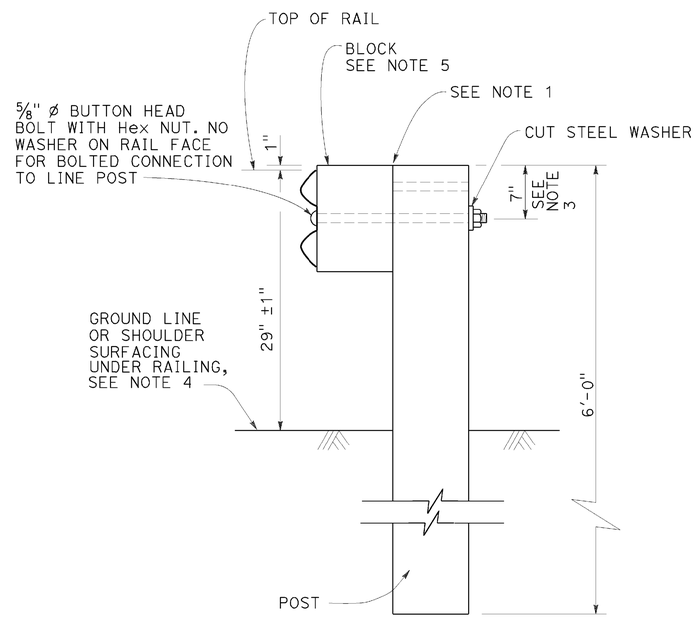

TYPICAL LINE
POST INSTALLATION

NOTES:

1. For wood post and wood block, toenail with 2-16d Galv nails in top of block. For steel post and notched wood or plastic block, notched face of block faces steel post.
2. A 6'-0" Length steel foundation tube, TS 8 x 6 x 3/16, without a soil plate, may be furnished and installed in place of the 4'-6" length steel foundation tube and soil plate shown, Minimum embadment of the 6'-0" length tube shall be 5'-9". A 5/8" ø Hex head bolt and nut shall be installed in the hole in the 6'-0" length tube to keep the wood post from dropping into the tube.
3. To connect railing to 27" terminal system end treatment, transition the top of railing height at a ratio of 120:1 to terminal system end treatment height plus one 12'-6" standard railing section at the transitioned height for a horizontal connection to the end treatment.
4. Install posts in soil.
5. See Revised Standard Plans RSP A77N1 and RSP A77N2 for details.
6. Holes excavation in the slope to construct the buried post end anchor shall be backfilled with selected earth, placed in layers approximately 1'-0" thick. Each layer shall be moistened and thoroughly compacted.

STATE OF CALIFORNIA
DEPARTMENT OF TRANSPORTATION

METAL BEAM GUARD RAILING RECONSTRUCT INSTALLATION

NO SCALE

RSP A77L3 DATED JULY 19, 2013 SUPPLEMENTS THE STANDARD PLANS BOOK DATED 2010.

REVISED STANDARD PLAN RSP A77L3

DATE PLOTTED => 21-JUN-2016
TIME PLOTTED => 13:52

Dist	COUNTY	ROUTE	POST MILES TOTAL PROJECT	SHEET No.	TOTAL SHEETS
02	Sis	5	R57.8/R58.5	53	106

Randell D. Hiatt
REGISTERED CIVIL ENGINEER

July 19, 2013
PLANS APPROVAL DATE

REGISTERED PROFESSIONAL ENGINEER
Randell D. Hiatt
No. C50200
Exp. 6-30-15
CIVIL
STATE OF CALIFORNIA

THE STATE OF CALIFORNIA OR ITS OFFICERS OR AGENTS SHALL NOT BE RESPONSIBLE FOR THE ACCURACY OR COMPLETENESS OF SCANNED COPIES OF THIS PLAN SHEET.

TO ACCOMPANY PLANS DATED 06-15-16

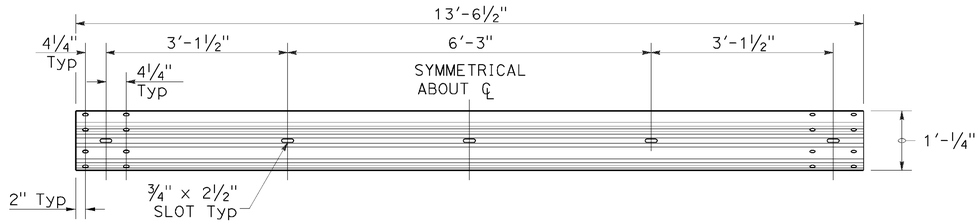

TYPICAL RAIL ELEMENT

NOTE:

1. Slotted holes for splice bolts to overlap ends of rail element.

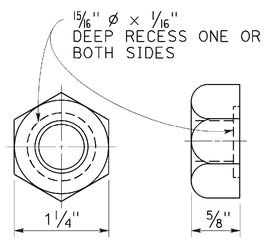

⅝" Ø RECESS NUT

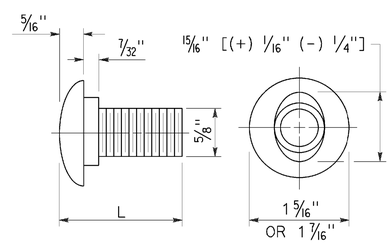

⅝" Ø BUTTON HEAD BOLT

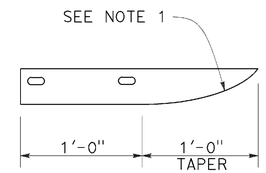

PLAN

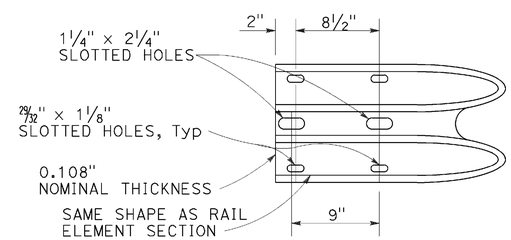

ELEVATION

END CAP

(TYPE A)

BUTTON HEAD BOLT

L	THREAD LENGTH
1⅜"	FULL THREAD LENGTH
2"	FULL THREAD LENGTH
10"	4" Min THREAD LENGTH
18"	4" Min THREAD LENGTH
20"	4" Min THREAD LENGTH
22"	4" Min THREAD LENGTH
26"	4" Min THREAD LENGTH
36"	4" Min THREAD LENGTH
** 2¾"	2" Min THREAD LENGTH
** 19"	4" Min THREAD LENGTH

** For nested rail applications.

STATE OF CALIFORNIA
DEPARTMENT OF TRANSPORTATION

MIDWEST GUARDRAIL SYSTEM STANDARD HARDWARE

NO SCALE

RSP A77M1 DATED JULY 19, 2013 SUPPLEMENTS THE STANDARD PLANS BOOK DATED 2010.

REVISED STANDARD PLAN RSP A77M1

2010 REVISED STANDARD PLAN RSP A77M1

DATE PLOTTED => 21-JUN-2016
TIME PLOTTED => 13:52

Dist	COUNTY	ROUTE	POST MILES TOTAL PROJECT	SHEET No.	TOTAL SHEETS
02	Sis	5	R57.8/R58.5	54	106

Randell D. Hiatt
REGISTERED CIVIL ENGINEER

November 15, 2013
PLANS APPROVAL DATE

REGISTERED PROFESSIONAL ENGINEER
Randell D. Hiatt
No. C50200
Exp. 6-30-15
CIVIL
STATE OF CALIFORNIA

THE STATE OF CALIFORNIA OR ITS OFFICERS OR AGENTS SHALL NOT BE RESPONSIBLE FOR THE ACCURACY OR COMPLETENESS OF SCANNED COPIES OF THIS PLAN SHEET.

TO ACCOMPANY PLANS DATED 06-15-16

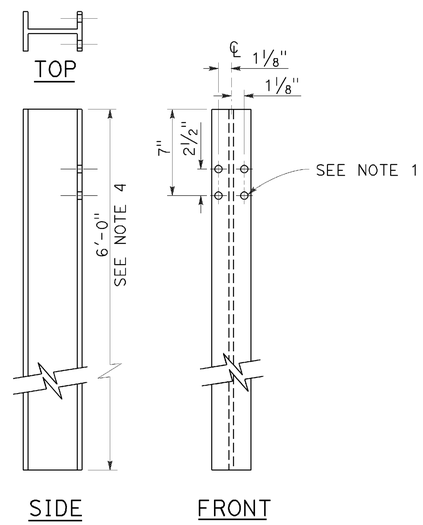

W6 x 9 OR W6 x 8.5
STEEL POST
See Note 4

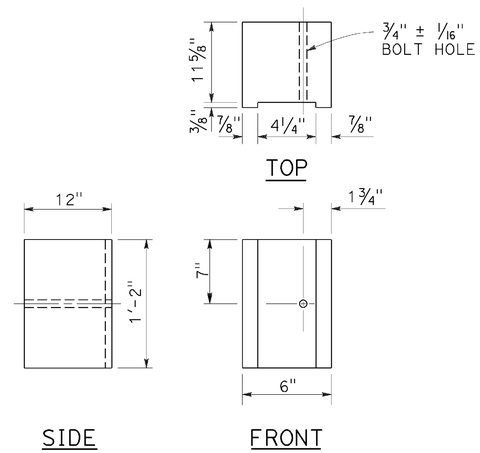

6" x 12"
NOTCHED WOOD BLOCK
See Notes 2 and 3

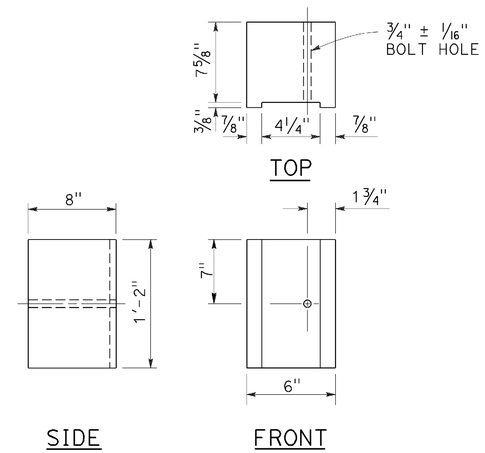

6" x 8"
NOTCHED WOOD BLOCK
Only for use with metal beam guard railing. See Note 5

NOTES:

1. All holes in steel post shall be 13/16" Dia maximum.
2. Dimensions shown for wood block are nominal.
3. Notched face of block faces steel post.
4. 6'-0" length posts to be used for typical roadway installation. See Revised Standard Plan RSP A77N3.
5. See Revised Standard Plan RSP A77L3 for use of 6" x 8" and 8" x 8" notched wood blocks.
6. This post and 8" x 12" block combination to be used for line post sections of MGS on narrow roadways and where strengthened line post sections of MGS are warranted to shield fixed objects.

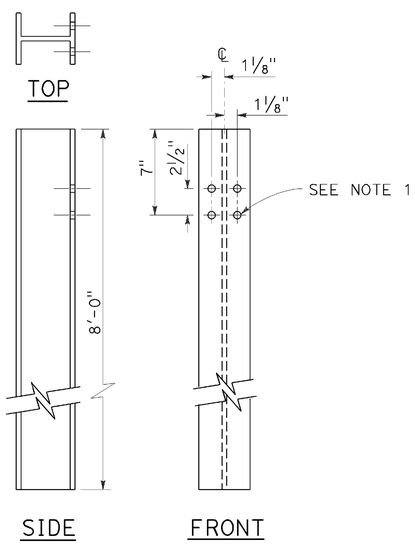

W6 x 15
STEEL POST
See Note 6

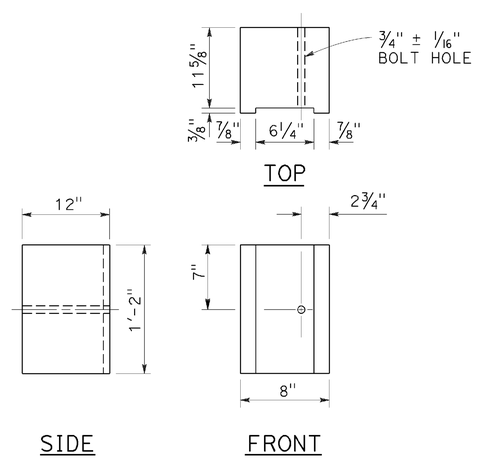

8" x 12"
NOTCHED WOOD BLOCK
See Notes 2 and 3

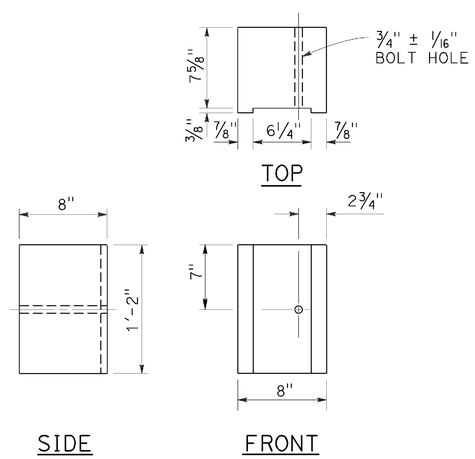

8" x 8"
NOTCHED WOOD BLOCK
Only for use with metal beam guard railing. See Note 5

STATE OF CALIFORNIA
DEPARTMENT OF TRANSPORTATION

MIDWEST GUARDRAIL SYSTEM STEEL POST AND NOTCHED WOOD BLOCK DETAILS

NO SCALE

RSP A77N2 DATED NOVEMBER 15, 2013 SUPERSEDES RSP A77N2
DATED JULY 19, 2013 THAT SUPPLEMENTS THE STANDARD PLANS BOOK DATED 2010.

REVISED STANDARD PLAN RSP A77N2

2010 REVISED STANDARD PLAN RSP A77N2

DATE PLOTTED => 21-JUN-2016
TIME PLOTTED => 13:52

Dist	COUNTY	ROUTE	POST MILES TOTAL PROJECT	SHEET No.	TOTAL SHEETS
02	Sis	5	R57.8/R58.5	55	106

Randell D. Hiatt
REGISTERED CIVIL ENGINEER

November 15, 2013
PLANS APPROVAL DATE

REGISTERED PROFESSIONAL ENGINEER
Randell D. Hiatt
No. C50200
Exp. 6-30-15
CIVIL
STATE OF CALIFORNIA

THE STATE OF CALIFORNIA OR ITS OFFICERS OR AGENTS SHALL NOT BE RESPONSIBLE FOR THE ACCURACY OR COMPLETENESS OF SCANNED COPIES OF THIS PLAN SHEET.

TO ACCOMPANY PLANS DATED 06-15-16

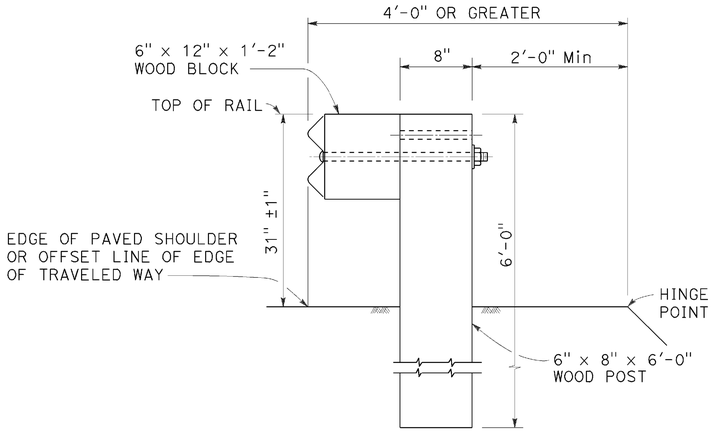

DETAIL A
TYPICAL ROADWAY INSTALLATION
See Note 1

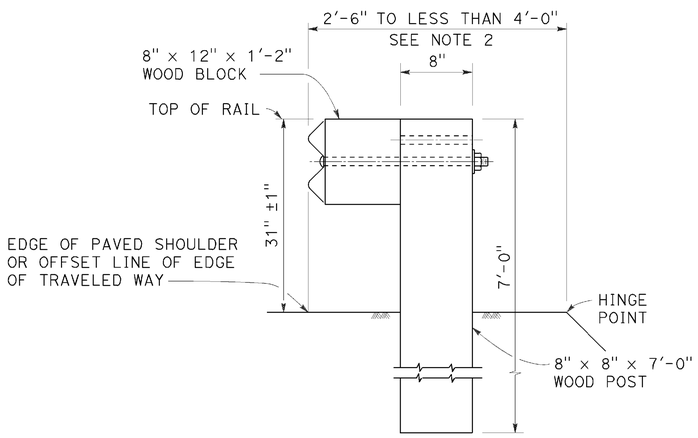

DETAIL B
NARROW ROADWAY INSTALLATION
See Note 1

POST EMBEDMENT

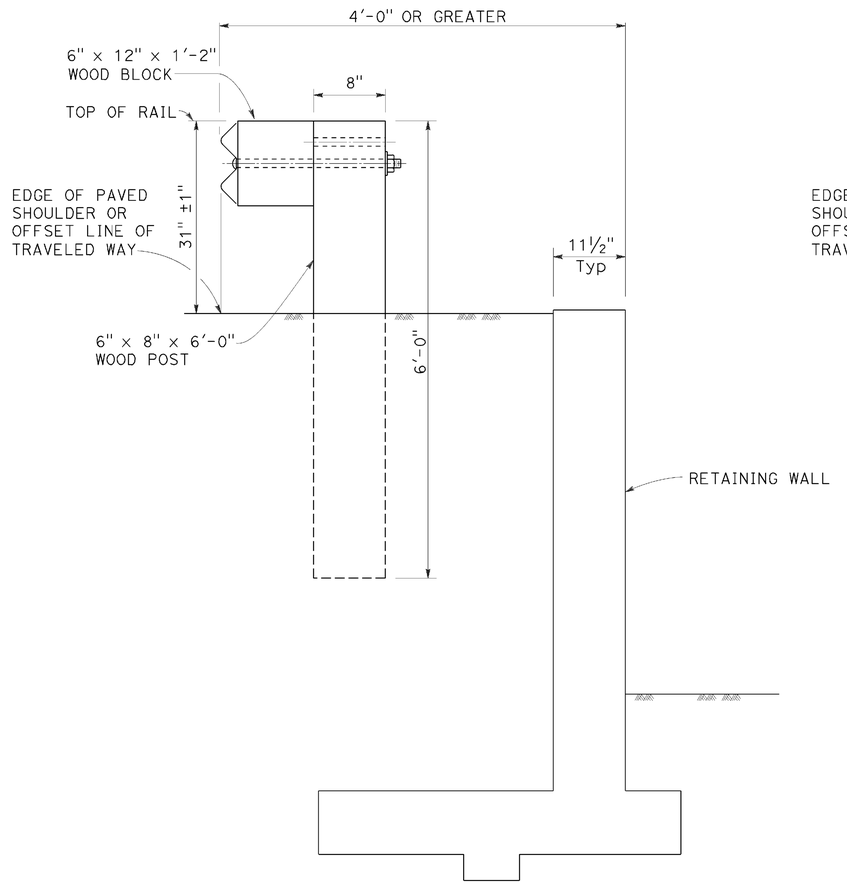

DETAIL C

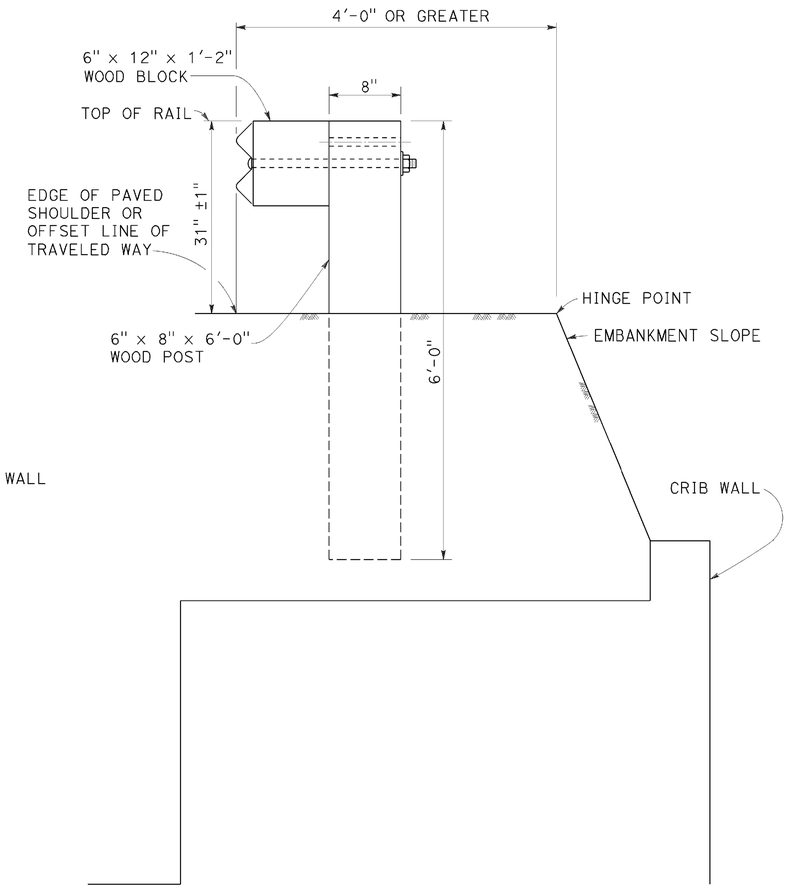

DETAIL D

INSTALLATION AT EARTH RETAINING WALLS

NOTES:

1. These installation details also applicable to steel line post installations. For Detail A, C, and D, where steel line post installations are constructed, W6 x 8.5 or W6 x 9 steel post, 6'-0" in length, with 6" x 12" x 1'-2" notched wood blocks or notched recycled plastic blocks are to be used in place of the size of wood post and wood block shown. For Detail B, where steel line post installations are constructed, W6 x 15 steel post, 8'-0" in length, with 8" x 12" x 1'-2" notched wood blocks or notched recycled plastic blocks are to be used in place of the size of wood post and wood block shown. For additional installation details, see Revised Standard Plan RSP A77L1 and RSP A77L2.
2. Where the distance between the face of the rail and the hinge point is less than 2'-6", see the Project Plans for special details.
3. For dike positioning with MGS installations, see Revised Standard Plan RSP A77N4.

STATE OF CALIFORNIA
DEPARTMENT OF TRANSPORTATION

MIDWEST GUARDRAIL SYSTEM TYPICAL LINE POST EMBEDMENT AND HINGE POINT OFFSET DETAILS

NO SCALE

RSP A77N3 DATED NOVEMBER 15, 2013 SUPERSEDES RSP A77N3 DATED JULY 19, 2013 THAT SUPPLEMENTS THE STANDARD PLANS BOOK DATED 2010.

REVISED STANDARD PLAN RSP A77N3

2010 REVISED STANDARD PLAN RSP A77N3

DATE PLOTTED => 21-JUN-2016
TIME PLOTTED => 13:52

Dist	COUNTY	ROUTE	POST MILES TOTAL PROJECT	SHEET No.	TOTAL SHEETS
02	Sis	5	R57.8/R58.5	56	106

Randell D. Hiatt
REGISTERED CIVIL ENGINEER

July 19, 2013
PLANS APPROVAL DATE

REGISTERED PROFESSIONAL ENGINEER
Randell D. Hiatt
No. C50200
Exp. 6-30-15
CIVIL
STATE OF CALIFORNIA

THE STATE OF CALIFORNIA OR ITS OFFICERS OR AGENTS SHALL NOT BE RESPONSIBLE FOR THE ACCURACY OR COMPLETENESS OF SCANNED COPIES OF THIS PLAN SHEET.

TO ACCOMPANY PLANS DATED 06-15-16

NOTES:

1. When necessary to place dike more than 7" in front of face of MGS, only Type C dike may be used. For dike details, see Revised Standard Plan RSP A87B.
2. For standard railing post embedment, see Revised Standard Plan RSP A77N3.
3. MGS delineation to be used where shown on the Project Plans.
4. When dike or curb is placed under MGS, the maximum height of the dike or curb shall be 6". Mountable dike should not be used. For dike and curb details, see Revised Standard Plans RSP A87A and RSP A87B.
5. For details of typical distance between the face of rail and hinge point, see Revised Standard Plan RSP A77N3.
6. For steel line posts, use 1/4 - 20 self-tapping screws in 0.22" diameter holes or 1/4" bolts in 9/32" diameter holes.

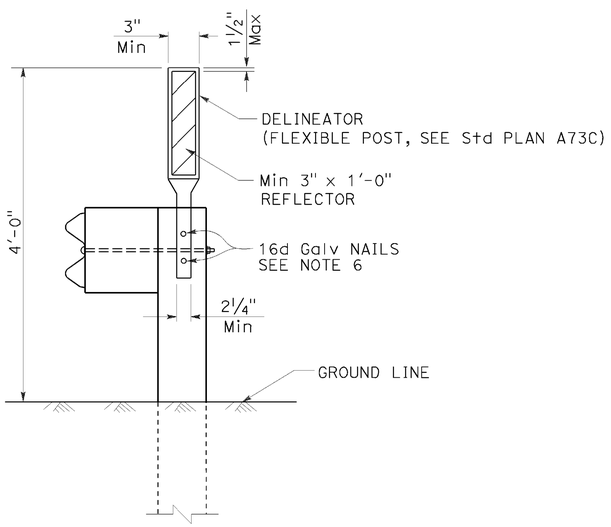

MGS DELINEATION

See Note 3

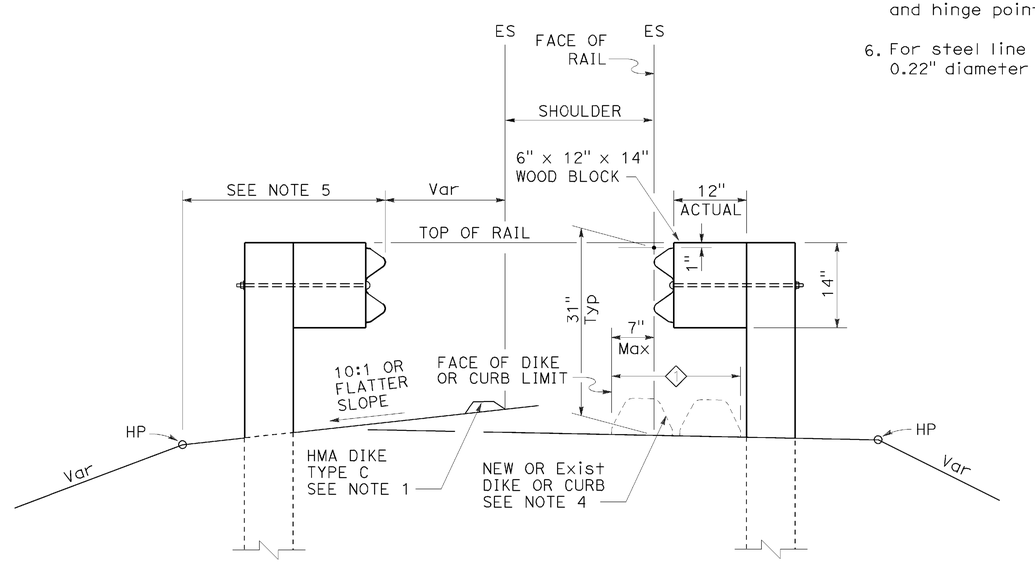

DIKE POSITIONING

See Note 1

1 PERMISSIBLE DIKE OR CURB PLACEMENT AREA

STATE OF CALIFORNIA
DEPARTMENT OF TRANSPORTATION

MIDWEST GUARDRAIL SYSTEM TYPICAL RAILING DELINEATION AND DIKE POSITIONING DETAILS

NO SCALE

RSP A77N4 DATED JULY 19, 2013 SUPPLEMENTS THE STANDARD PLANS BOOK DATED 2010.

REVISED STANDARD PLAN RSP A77N4

2010 REVISED STANDARD PLAN RSP A77N4

DATE PLOTTED => 21-JUN-2016
TIME PLOTTED => 13:53

Dist	COUNTY	ROUTE	POST MILES TOTAL PROJECT	SHEET No.	TOTAL SHEETS
02	Sis	5	R57.8/R58.5	57	106

Randell D. Hiatt
REGISTERED CIVIL ENGINEER

November 15, 2013
PLANS APPROVAL DATE

REGISTERED PROFESSIONAL ENGINEER
Randell D. Hiatt
No. C50200
Exp. 6-30-15
CIVIL
STATE OF CALIFORNIA

THE STATE OF CALIFORNIA OR ITS OFFICERS OR AGENTS SHALL NOT BE RESPONSIBLE FOR THE ACCURACY OR COMPLETENESS OF SCANNED COPIES OF THIS PLAN SHEET.

TO ACCOMPANY PLANS DATED 06-15-16

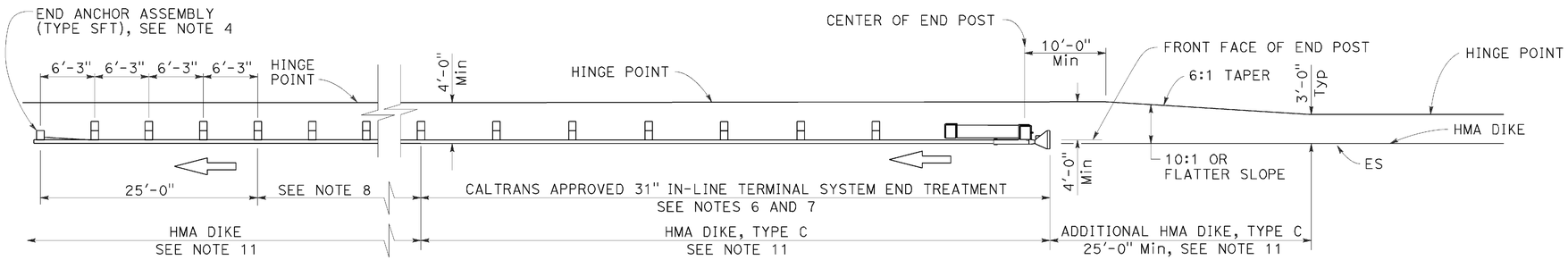

TYPE 11A LAYOUT

(Embankment MGS installation with 31" in-line end treatment at traffic approach end of railing) see Note 5

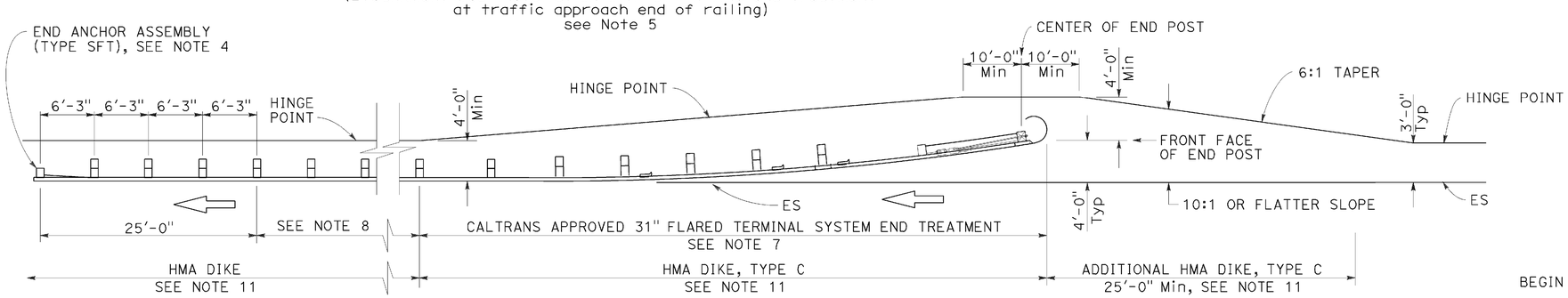

TYPE 11B LAYOUT

(Embankment MGS installation with 31" flared end treatment at traffic approach end of railing) see Note 5

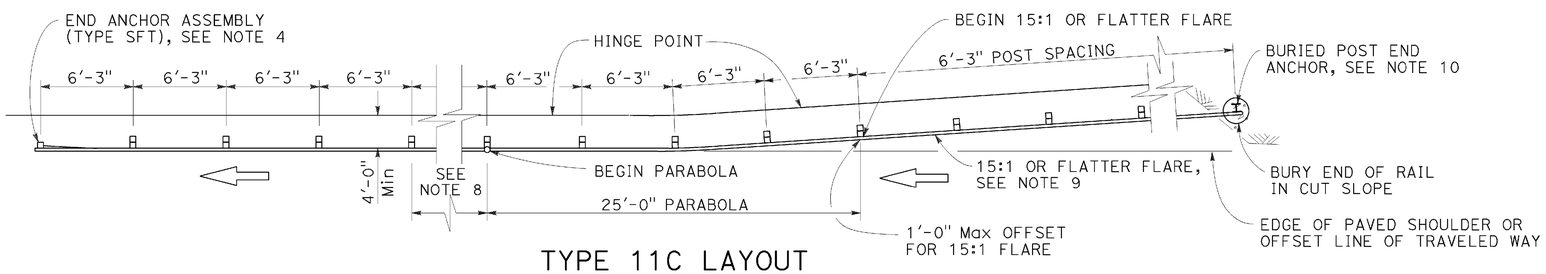

TYPE 11C LAYOUT

(Embankment MGS installation with buried end anchor treatment at traffic approach end of railing) see Notes 5 and 11

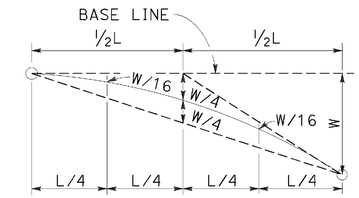

TYPICAL PARABOLIC LAYOUT

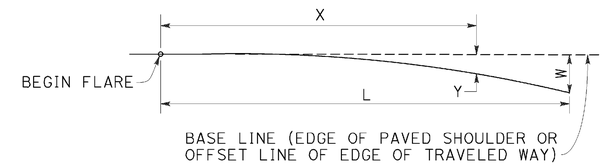

$$Y = \frac{WX^2}{L^2}$$

Y = OFFSET FROM BASE LINE
W = MAXIMUM OFFSET
X = DISTANCE ALONG BASE LINE
L = LENGTH OF FLARE

PARABOLIC FLARE OFFSETS

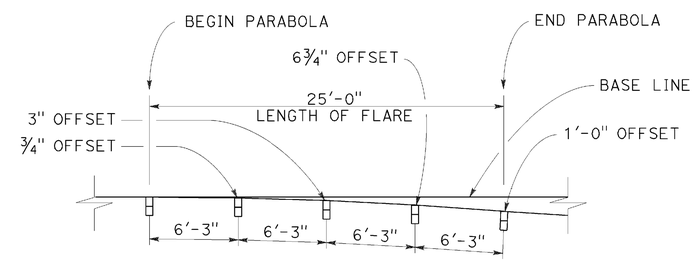

TYPICAL FLARE OFFSETS FOR 1 FOOT Max END OFFSET

NOTES:

1. Line post, blocks and hardware to be used are shown on Revised Standard Plans RSP A77L1, RSP A77L2, RSP A77M1, RSP A77N1 and RSP A77N2.
2. MGS post spacing to be 6'-3" center to center, except as otherwise noted.
3. Except as noted, line posts are 6" x 8" x 6'-0" wood with 6" x 12" x 1'-2" wood blocks. W6 x 8.5 or W6 x 9 steel posts, 6'-0" in length, with 6" x 12" x 1'-2" notched wood blocks or recycled plastic blocks may be used for 6" x 8" x 6'-0" wood post with 6" x 12" x 1'-2" wood blocks where applicable and when specified.
4. For End Anchor Assembly (Type SFT) details, see Revised Standard Plan RSP A77S1.
5. Layout Types 11A, 11B or 11C are typically used where MGS is recommended to shield embankment slopes and a crashworthy end treatment is required for only one direction of traffic.
6. 31" in-line terminal system end treatments are used where site conditions will not accommodate a flared end treatment.
7. The type of 31" terminal system end treatment to be used will be shown on the Project Plans.
8. Dependent on site conditions (embankment height and side slope), construction of additional MGS (length equal to multiples of 12'-6" with 6'-3" post spacing) may be advisable.
9. The 15:1 or flatter flare used with buried end anchors is based on the edge of the paved shoulder or offset line of edge of the traveled way. The length of MGS within the 15:1 or flatter flare is based on site conditions and should be a length equal to multiples of 12'-6".
10. For details of the buried post end anchor used with Type 11C Layout, see Revised Standard Plan RSP A77T2.
11. Where placement of dike is required with MGS installations, see Revised Standard Plan RSP A77N4 for dike positioning details.

STATE OF CALIFORNIA
DEPARTMENT OF TRANSPORTATION

MIDWEST GUARDRAIL SYSTEM TYPICAL LAYOUTS FOR EMBANKMENTS

NO SCALE

RSP A77P1 DATED NOVEMBER 15, 2013 SUPERSEDES RSP A77P1 DATED JULY 19, 2013 THAT SUPPLEMENTS THE STANDARD PLANS BOOK DATED 2010.

REVISED STANDARD PLAN RSP A77P1

2010 REVISED STANDARD PLAN RSP A77P1

DATE PLOTTED => 21-JUN-2016
TIME PLOTTED => 13:53

Dist	COUNTY	ROUTE	POST MILES TOTAL PROJECT	SHEET No.	TOTAL SHEETS
02	Sis	5	R57.8/R58.5	58	106

Randell D. Hiatt
REGISTERED CIVIL ENGINEER

August 14, 2015
PLANS APPROVAL DATE

REGISTERED PROFESSIONAL ENGINEER
Randell D. Hiatt
No. C50200
Exp. 6-30-17
CIVIL
STATE OF CALIFORNIA

THE STATE OF CALIFORNIA OR ITS OFFICERS OR AGENTS SHALL NOT BE RESPONSIBLE FOR THE ACCURACY OR COMPLETENESS OF SCANNED COPIES OF THIS PLAN SHEET.

TO ACCOMPANY PLANS DATED 06-15-16

2010 REVISED STANDARD PLAN RSP A77Q1

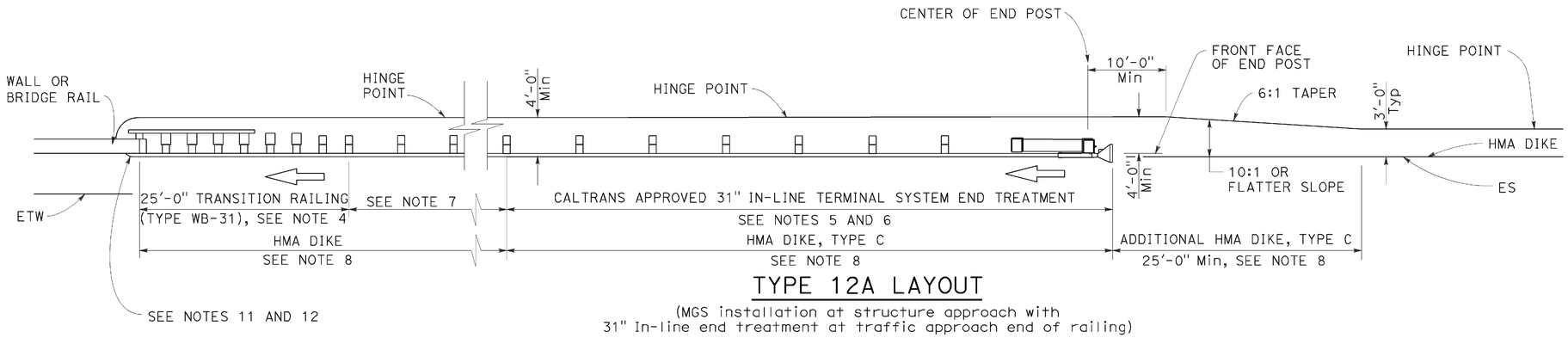

TYPE 12A LAYOUT

(MGS installation at structure approach with
31" In-line end treatment at traffic approach end of railing)
See Note 9

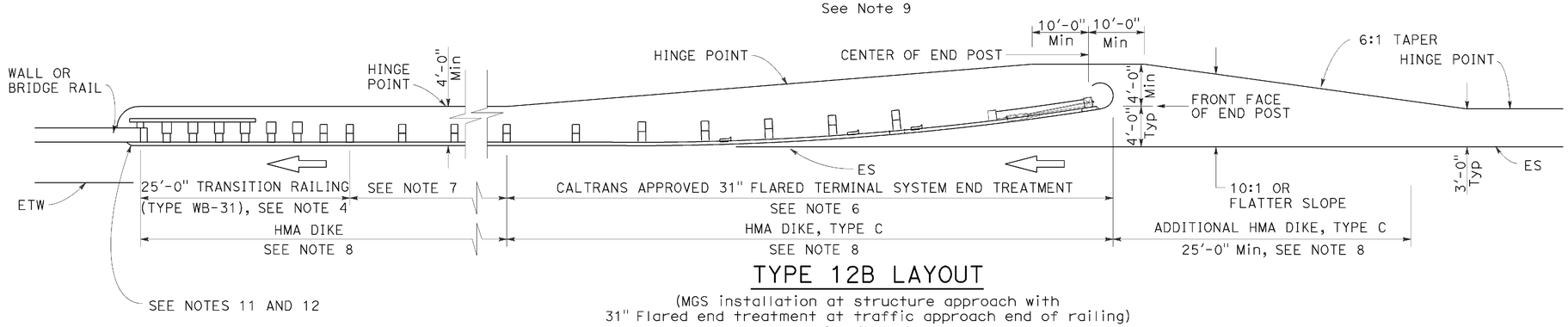

TYPE 12B LAYOUT

(MGS installation at structure approach with
31" Flared end treatment at traffic approach end of railing)
See Note 9

NOTES:

1. Line post, blocks and hardware to be used are shown on Revised Standard Plans RSP A77L1, RSP A77L2, RSP A77M1, RSP A77N1 and RSP A77N2.
2. MGS post spacing to be 6'-3" center to center, except as otherwise noted.
3. Except as noted, line posts are 6" x 8" x 6'-0" wood with 6" x 12" x 1'-2" wood blocks. W6 x 8.5 or W6 x 9 steel posts, 6'-0" in length, with 6" x 12" x 1'-2" notched wood blocks or plastic blocks may be used for 6" x 8" x 6'-0" wood posts with 6" x 12" x 1'-2" wood blocks where applicable and when specified.
4. For Transition Railing (Type WB-31) details for Types 12A and 12B Layouts, see Revised Standard Plan RSP A77U4.
5. 31" in-line terminal system end treatments are used where site conditions will not accommodate a 31" flared end treatment.
6. The type of 31" terminal system end treatment to be used will be shown on the Project Plans.
7. Dependent on site conditions (embankment height, side slopes, or other fixed objects), it may be advisable to construct additional guard railing (a length equal to multiples of 12'-6" with 6'-3" post spacing) between the transition railing and end treatment. A 12.5 degree angle of departure can be drawn on the Project Plans from the edge of traveled way through the outer most point of the fixed object to determine the additional length of railing needed.
8. Where placement of dike is required with guard railing installations, see Revised Standard Plan RSP A77N4 for dike positioning details.
9. Type 12A or Type 12B Layouts are typically used:
   a. To the right of approaching traffic, at the end of a structure, on two-lane conventional highway where the roadbed width across the structure is less than 40 feet.
   b. To the left of approaching traffic, at the end of a structure, on two-lane conventional highway where the roadbed width across the structure is less than 40 feet.
   c. To the right of approaching traffic at the end of each structure on multilane freeways or expressways with separate adjacent or parallel bridges.
   d. To the right of approaching traffic at the end of the structure on multilane freeways or expressways with decked median on the bridge.
10. See Revised Standard Plan RSP A77Q3 for typical layout used left of approaching traffic at the ends of each structure on multilane freeways or expressways with separate adjacent or parallel bridges.
11. For additional details of typical connections to bridge rail, see Connection Detail AA on Revised Standard Plans RSP A77U1 and RSP A77U2 and Connection Detail FF on Revised Standard Plans RSP A77V1 and RSP A77V2.
12. For additional details of a typical connection to walls or abutments, see Revised Standard Plan RSP A77U3.

STATE OF CALIFORNIA
DEPARTMENT OF TRANSPORTATION

MIDWEST GUARDRAIL SYSTEM TYPICAL LAYOUTS FOR STRUCTURE APPROACH

NO SCALE

RSP A77Q1 DATED AUGUST 14, 2015 SUPERSEDES RSP A77Q1 DATED JULY 19, 2013 THAT SUPPLEMENTS THE STANDARD PLANS BOOK DATED 2010.

REVISED STANDARD PLAN RSP A77Q1

DATE PLOTTED => 21-JUN-2016
TIME PLOTTED => 13:53

Dist	COUNTY	ROUTE	POST MILES TOTAL PROJECT	SHEET No.	TOTAL SHEETS
02	Sis	5	R57.8/R58.5	59	106

Randell D. Hiatt
REGISTERED CIVIL ENGINEER

August 14, 2015
PLANS APPROVAL DATE

REGISTERED PROFESSIONAL ENGINEER
Randell D. Hiatt
No. C50200
Exp. 6-30-17
CIVIL
STATE OF CALIFORNIA

THE STATE OF CALIFORNIA OR ITS OFFICERS OR AGENTS SHALL NOT BE RESPONSIBLE FOR THE ACCURACY OR COMPLETENESS OF SCANNED COPIES OF THIS PLAN SHEET.

TO ACCOMPANY PLANS DATED 06-15-16

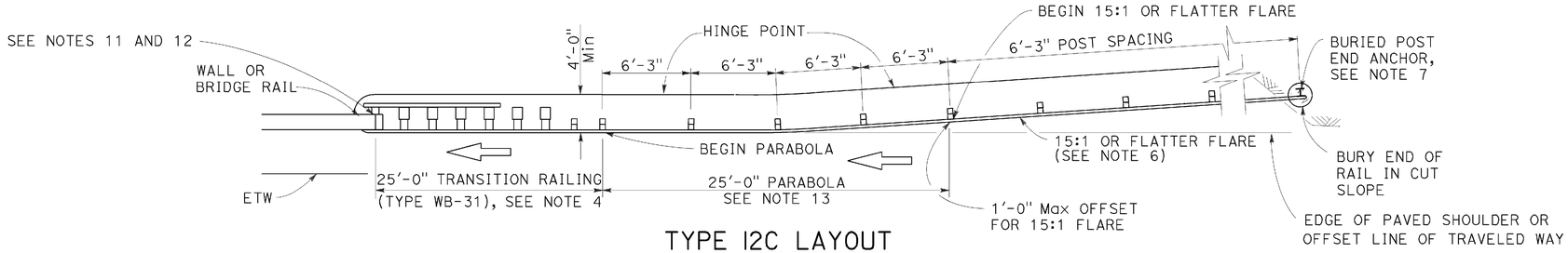

TYPE 12C LAYOUT

(MGS installation at structure approach with a
Buried end anchor treatment at traffic approach end of railing)
See Notes 8 and 9

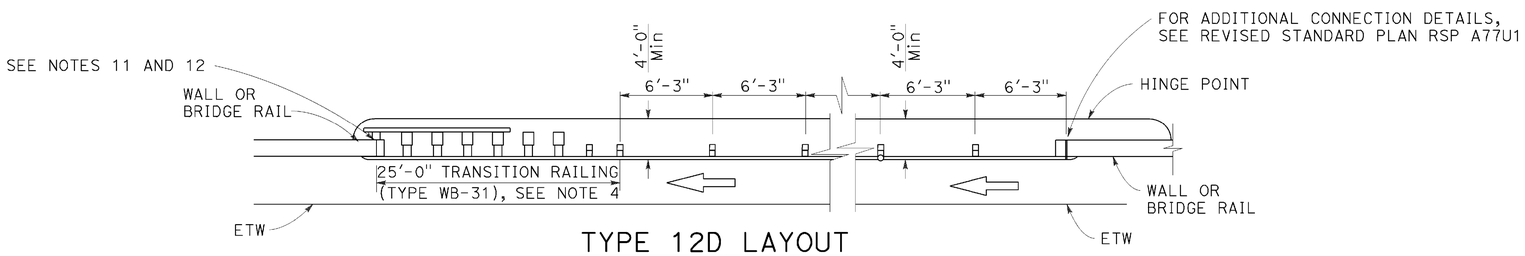

TYPE 12D LAYOUT

(Continuous MGS installation between structures)
See Notes 5 and 9

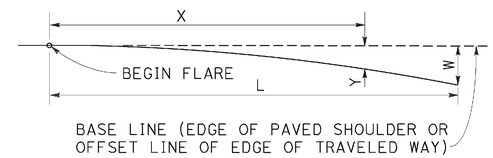

$$Y = \frac{WX^2}{L^2}$$

Y = OFFSET FROM BASE LINE
W = MAXIMUM OFFSET
X = DISTANCE ALONG BASE LINE
L = LENGTH OF FLARE

PARABOLIC FLARE OFFSETS

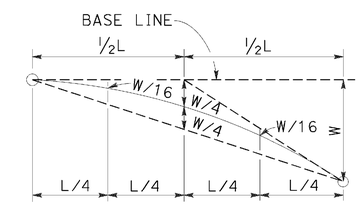

TYPICAL PARABOLIC LAYOUT

NOTES:

1. Line post, blocks and hardware to be used are shown on Revised Standard Plans RSP A77L1, RSP A77L2, RSP A77M1, RSP A77N1 and RSP A77N2.
2. MGS post spacing to be 6'-3" center to center, except as otherwise noted.
3. Except as noted, line posts are 6" x 8" x 6'-0" m wood with 6" x 12" x 1'-2" wood blocks. W6 x 8.5 or W6 x 9 steel posts, 6'-0" in length, with 6" x 12" x 1'-2" notched wood blocks or plastic blocks may be used for 6" x 8" x 6'-0" wood posts with 6" x 12" x 1'-2" wood blocks where applicable and when specified.
4. For Transition Railing (Type WB-31) details for Types 12C and 12D Layouts, see Revised Standard Plan RSP A77U4.
5. Type 12D layout is typically used where continous MGS is recommended between structures.
6. The 15:1 or flatter flare for Type 12C Layout is based on the edge of the paved shoulder or offset line of edge of the traveled way. The length of MGS with the 15:1 or flatter flare is based on site conditions and should be a length equal to multiples of 12'-6".
7. For details of the buried post end anchor used with Type 12C Layout, see Revised Standard Plan RSP A77T2.
8. Where placement of dike is required with MGS installations, see Revised Standard Plan RSP A77N4 for dike positioning details.
9. Type 12C Layout is typically used:
   a. To the right of approaching traffic, at the end of the structure, on two-lane conventional highway where the roadbed width across the structure is less than 40 feet.
   b. To the left of approaching traffic, at each of a structure, on two-lane conventional highway where the roadbed width across the structure is less than 40 feet.
   c. To the right of approaching traffic at the end of each structure on multilane freeways or expressways with separate adjacent or parallel bridges.
   d. To the right of approaching traffic at the end of the structure on multilane freeways or expressways with decked median on the bridge.
10. See Revised Standard Plan RSP A77Q3 for typical layout used left of approaching traffic at the ends of each structure on multilane freeways or expressways with separate adjacent or parallel bridges.
11. For additional details of typical connections to bridge rail, see Connection Detail AA on Revised Standard Plans RSP A77U1 and RSP A77U2 and Connection Detail FF on Revised Standard Plans RSP A77V1 and RSP A77V2.
12. For additional details of a typical connection to walls or abutments, see Revised Standard Plan RSP A77U3.
13. For typical flare offsets for 25'-0" length parabola with maximum offset of 1'-0", see Revised Standard Plan RSP A77P1.

STATE OF CALIFORNIA
DEPARTMENT OF TRANSPORTATION

MIDWEST GUARDRAIL SYSTEM TYPICAL LAYOUTS FOR STRUCTURE APPROACH AND BETWEEN STRUCTURES

NO SCALE

RSP A77Q2 DATED AUGUST 14, 2015 SUPERSEDES RSP A77Q2 DATED JULY 19, 2013 THAT SUPPLEMENTS THE STANDARD PLANS BOOK DATED 2010.

REVISED STANDARD PLAN RSP A77Q2

2010 REVISED STANDARD PLAN RSP A77Q2

DATE PLOTTED => 21-JUN-2016
TIME PLOTTED => 13:53

Dist	COUNTY	ROUTE	POST MILES TOTAL PROJECT	SHEET No.	TOTAL SHEETS
02	Sis	5	R57.8/R58.5	60	106

Randell D. Hiatt
REGISTERED CIVIL ENGINEER

August 14, 2015
PLANS APPROVAL DATE

REGISTERED PROFESSIONAL ENGINEER
Randell D. Hiatt
No. C50200
Exp. 6-30-17
CIVIL
STATE OF CALIFORNIA

THE STATE OF CALIFORNIA OR ITS OFFICERS OR AGENTS SHALL NOT BE RESPONSIBLE FOR THE ACCURACY OR COMPLETENESS OF SCANNED COPIES OF THIS PLAN SHEET.

TO ACCOMPANY PLANS DATED 06-15-16

2010 REVISED STANDARD PLAN RSP A77Q3

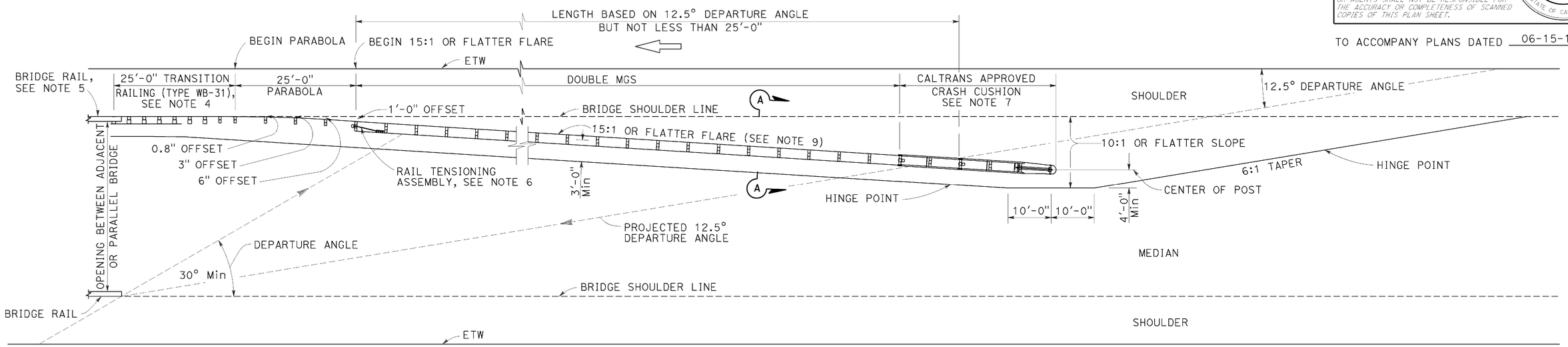

TYPE 12E LAYOUT

See Note 9

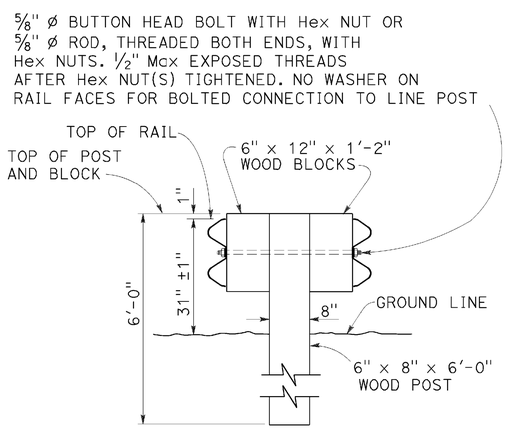

SECTION A-A
TYPICAL DOUBLE MIDWEST GUARDRAIL SYSTEM

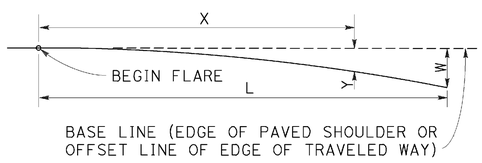

BASE LINE (EDGE OF PAVED SHOULDER OR OFFSET LINE OF EDGE OF TRAVELED WAY)

$$Y = \frac{WX^2}{L^2}$$

Y = OFFSET FROM BASE LINE
W = MAXIMUM OFFSET
X = DISTANCE ALONG BASE LINE
L = LENGTH OF FLARE

PARABOLIC FLARE OFFSETS

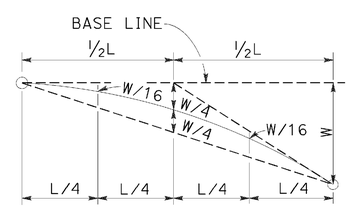

TYPICAL PARABOLIC LAYOUT

NOTES:

1. Line post, blocks and hardware to be used are shown on Revised Standard Plans RSP A77L1, RSP A77L2, RSP A77M1, RSP A77N1 and RSP A77N2.
2. MGS post spacing to be 6'-3" center to center, except as otherwise noted.
3. Except as noted, line posts are 6" x 8" x 6'-0" wood with 6" x 12" x 1'-2" wood blocks. W6 x 8.5 or W6 x 9 steel posts, 6'-0" in length, with 6" x 12" x 1'-2" notched wood blocks or notched recycled plastic blocks may be used for 6" x 8" x 6'-0" wood line posts with 6" x 12" x 1'-2" wood blocks where applicable and when specified.
4. For Transition Railing (Type WB-31) details, see Revised Standard Plan RSP A77U4.
5. For additional details of a typical connection to bridge rail, see Connection Detail AA on Revised Standard Plan RSP A77U1.
6. For Rail Tensioning Assembly details, see Revised Standard Plan RSP A77S2.
7. The type of Crash Cushion to be used will be shown on the Project Plans.
8. Type 12E Layout is typically used left of approaching traffic at the end of each structure on multilane freeways or expressways where a median type barrier is not constructed between separated roadbeds.
9. The 15:1 or flatter flare is measured off of the edge of traveled way.

STATE OF CALIFORNIA
DEPARTMENT OF TRANSPORTATION

MIDWEST GUARDRAIL SYSTEM TYPICAL LAYOUTS FOR STRUCTURE APPROACH

NO SCALE

RSP A77Q3 DATED AUGUST 14, 2015 SUPERSEDES RSP A77Q3 DATED JULY 19, 2013 THAT SUPPLEMENTS THE STANDARD PLANS BOOK DATED 2010.

REVISED STANDARD PLAN RSP A77Q3

DATE PLOTTED => 21-JUN-2016
TIME PLOTTED => 13:33

Dist	COUNTY	ROUTE	POST MILES TOTAL PROJECT	SHEET No.	TOTAL SHEETS
02	Sis	5	R57.8/R58.5	61	106

Randell D. Hiatt
REGISTERED CIVIL ENGINEER

November 15, 2013
PLANS APPROVAL DATE

REGISTERED PROFESSIONAL ENGINEER
Randell D. Hiatt
No. C50200
Exp. 6-30-15
CIVIL
STATE OF CALIFORNIA

THE STATE OF CALIFORNIA OR ITS OFFICERS OR AGENTS SHALL NOT BE RESPONSIBLE FOR THE ACCURACY OR COMPLETENESS OF SCANNED COPIES OF THIS PLAN SHEET.

TO ACCOMPANY PLANS DATED 06-15-16

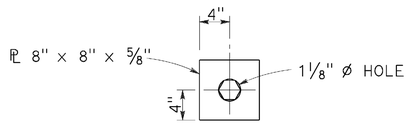

DETAIL "A"
CABLE CONNECTION
END PLATE

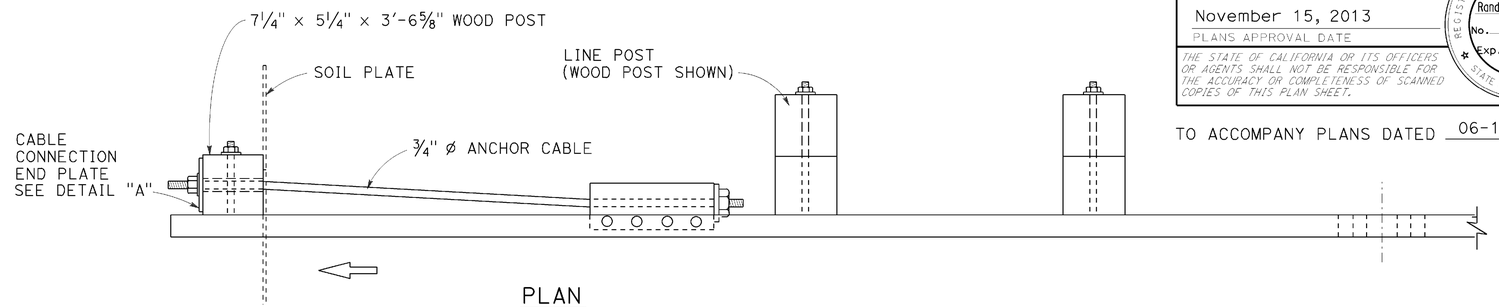

PLAN

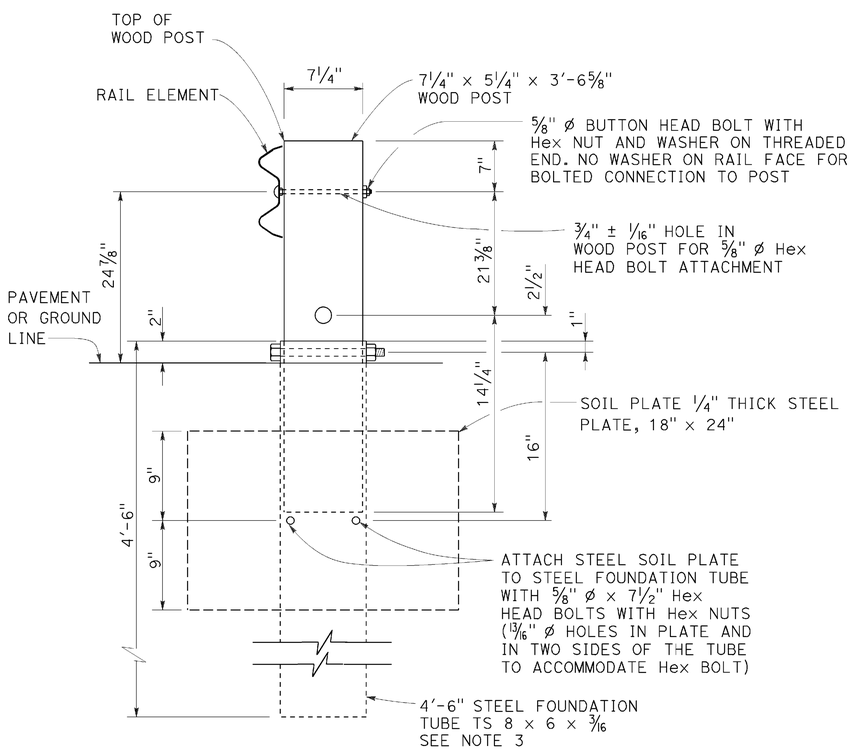

SECTION A-A

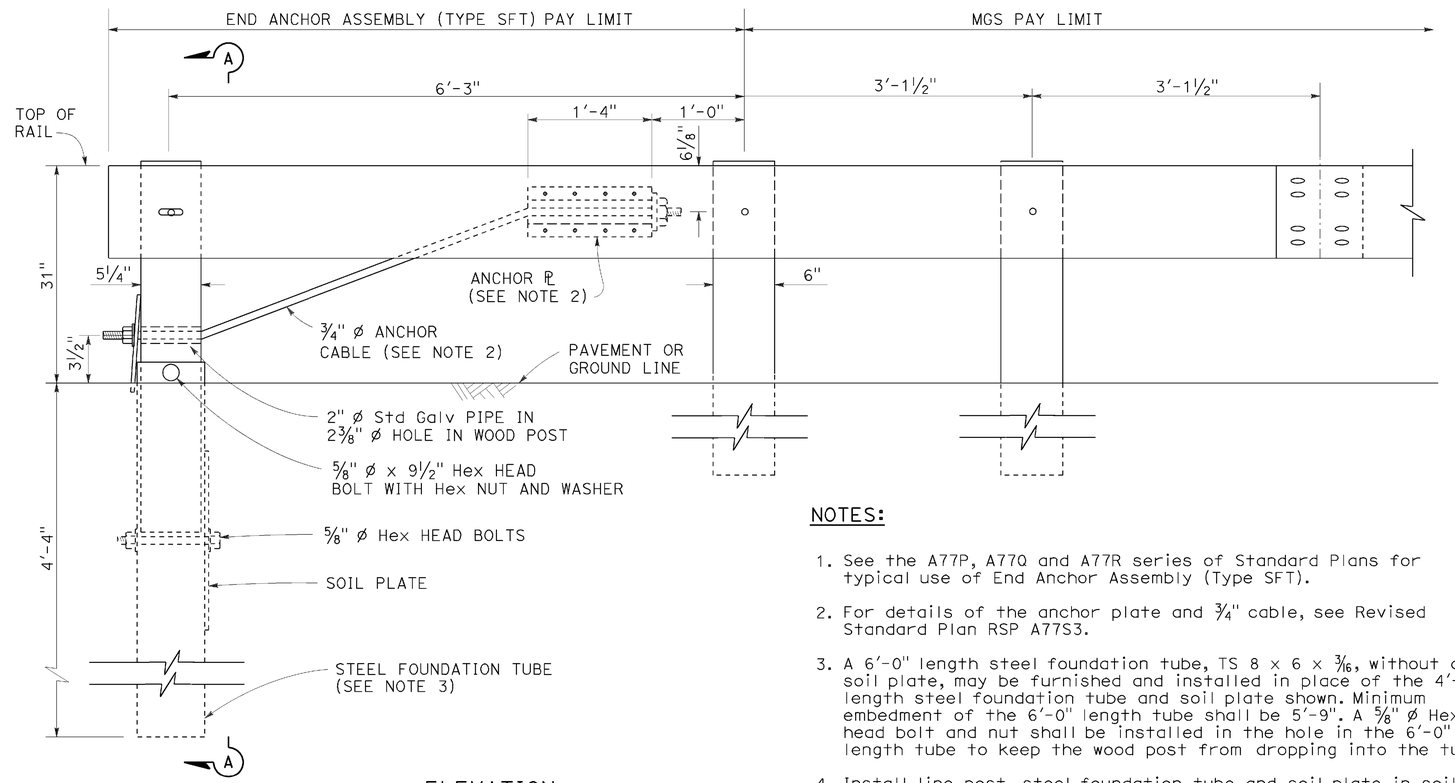

ELEVATION

END ANCHOR
ASSEMBLY (TYPE SFT)
See Note 1

NOTES:

1. See the A77P, A77Q and A77R series of Standard Plans for typical use of End Anchor Assembly (Type SFT).
2. For details of the anchor plate and 3/4" cable, see Revised Standard Plan RSP A77S3.
3. A 6'-0" length steel foundation tube, TS 8 x 6 x 3/16, without a soil plate, may be furnished and installed in place of the 4'-6" length steel foundation tube and soil plate shown. Minimum embedment of the 6'-0" length tube shall be 5'-9". A 5/8" ø Hex head bolt and nut shall be installed in the hole in the 6'-0" length tube to keep the wood post from dropping into the tube.
4. Install line post, steel foundation tube and soil plate in soil.

STATE OF CALIFORNIA
DEPARTMENT OF TRANSPORTATION

MIDWEST GUARDRAIL SYSTEM END ANCHOR ASSEMBLY (TYPE SFT)

NO SCALE

RSP A77S1 DATED NOVEMBER 15, 2013 SUPERSEDES RSP A77S1
DATED JULY 19, 2013 THAT SUPPLEMENTS THE STANDARD PLANS BOOK DATED 2010.

REVISED STANDARD PLAN RSP A77S1

2010 REVISED STANDARD PLAN RSP A77S1

DATE PLOTTED => 21-JUN-2016
TIME PLOTTED => 13:54

Dist	COUNTY	ROUTE	POST MILES TOTAL PROJECT	SHEET No.	TOTAL SHEETS
02	Sis	5	R57.8/R58.5	62	106

Randell D. Hiatt
REGISTERED CIVIL ENGINEER

July 19, 2013
PLANS APPROVAL DATE

REGISTERED PROFESSIONAL ENGINEER
Randell D. Hiatt
No. C50200
Exp. 6-30-15
CIVIL
STATE OF CALIFORNIA

THE STATE OF CALIFORNIA OR ITS OFFICERS OR AGENTS SHALL NOT BE RESPONSIBLE FOR THE ACCURACY OR COMPLETENESS OF SCANNED COPIES OF THIS PLAN SHEET.

TO ACCOMPANY PLANS DATED 06-15-16

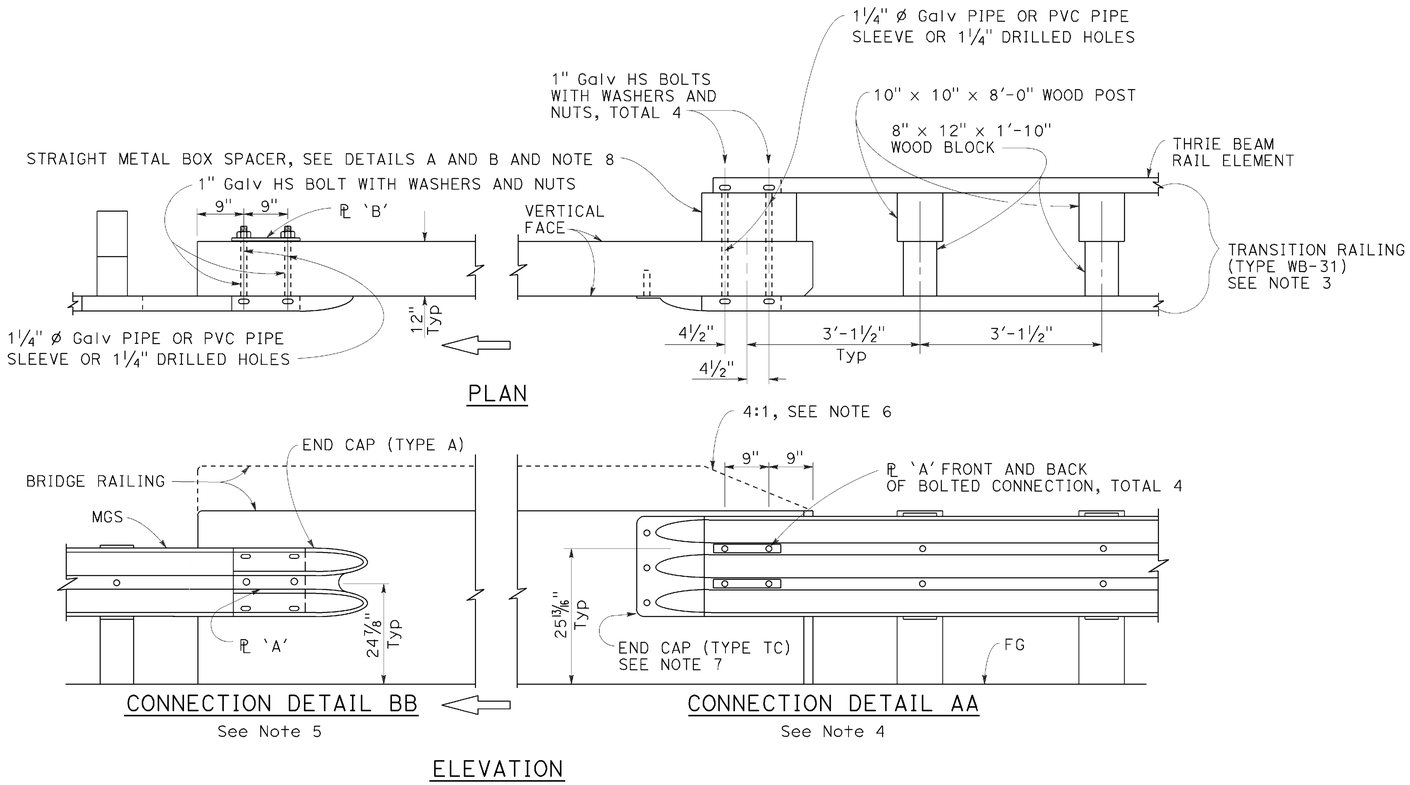

MIDWEST GUARDRAIL SYSTEM CONNECTION TO BRIDGE RAILING WITHOUT SIDEWALK

NOTES:

1. See Revised Standard Plan RSP A77U2 for additional connection details to bridges without sidewalks.
2. Additional details of posts, blocks and hardware are shown on Revised Standard Plans RSP A77M1, RSP A77N1 and RSP A77N2.
3. For additional details of Transition Railing (Type WB-31), see Revised Standard Plan RSP A77U4. Transition Railing (Type WB-31) transitions the 12 gauge MGS railing section to a heavier gage nested thrie beam railing section which is connected to the concrete bridge railing.
4. For typical use of Connection Detail AA, see Layout Types 12A and 12B on Revised Standard Plan RSP A77Q1, Layout Types 12C and 12D on Revised Standard Plan RSP A77Q2, and Layout Type 12E on Revised Standard Plan RSP A77Q3.
5. For typical use of Connection Detail BB, see Layout Type 12D (structure departure railing connection) on Revised Standard Plan RSP A77Q2 and Layout Type 12DD on Revised Standard Plan RSP A77Q5.
6. Where the height of the bridge railing exceeds the height of the thrie beam railing by more than 1" at Connection Detail AA, taper the top of the end of the bridge railing at 4:1 to match the top elevation of the thrie beam rail.
7. For details of End Cap (Type TC), see Revised Standard Plan RSP A77U4.
8. See Revised Standard Plan RSP A77U4 for additional details regarding depth dimension for straight metal box spacer.

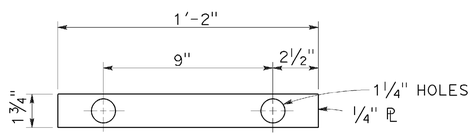

PLATE 'A'

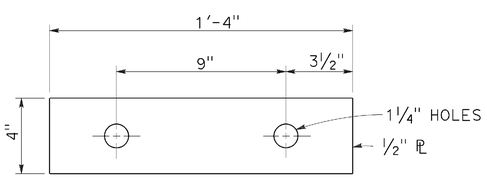

PLATE 'B'
(For backside of connection BB)

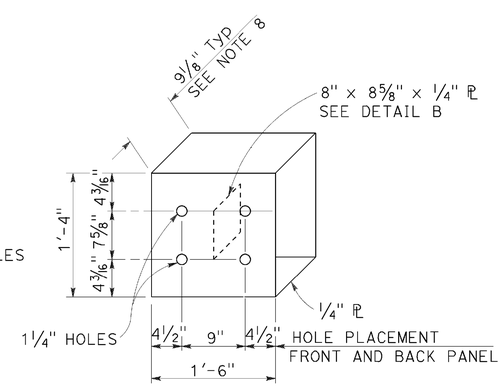

DETAIL A

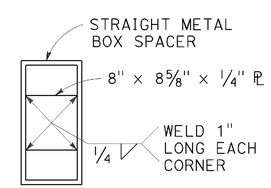

DETAIL B

STRAIGHT METAL BOX SPACER

STATE OF CALIFORNIA
DEPARTMENT OF TRANSPORTATION

MIDWEST GUARDRAIL SYSTEM CONNECTIONS TO BRIDGE RAILINGS WITHOUT SIDEWALKS DETAILS No. 1

NO SCALE

RSP A77U1 DATED JULY 19, 2013 SUPPLEMENTS THE STANDARD PLANS BOOK DATED 2010.

REVISED STANDARD PLAN RSP A77U1

2010 REVISED STANDARD PLAN RSP A77U1

DATE PLOTTED => 21-JUN-2016
TIME PLOTTED => 13:54

Dist	COUNTY	ROUTE	POST MILES TOTAL PROJECT	SHEET No.	TOTAL SHEETS
02	Sis	5	R57.8/R58.5	63	106

Randell D. Hiatt
REGISTERED CIVIL ENGINEER

July 19, 2013
PLANS APPROVAL DATE

REGISTERED PROFESSIONAL ENGINEER
Randell D. Hiatt
No. C50200
Exp. 6-30-15
CIVIL
STATE OF CALIFORNIA

THE STATE OF CALIFORNIA OR ITS OFFICERS OR AGENTS SHALL NOT BE RESPONSIBLE FOR THE ACCURACY OR COMPLETENESS OF SCANNED COPIES OF THIS PLAN SHEET.

TO ACCOMPANY PLANS DATED 06-15-16

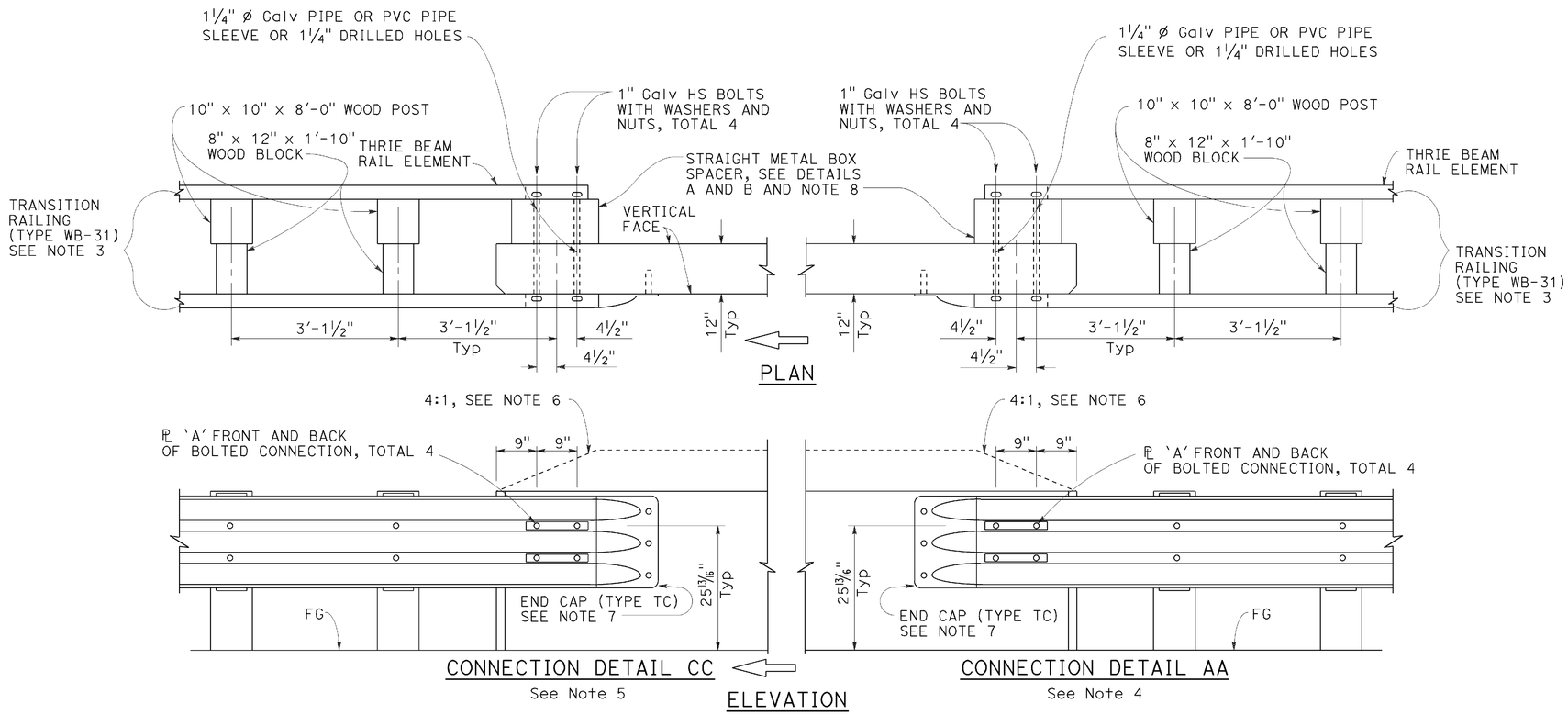

MIDWEST GUARDRAIL SYSTEM CONNECTION TO BRIDGE RAILING WITHOUT SIDEWALK

NOTES:

1. See Revised Standard Plan RSP A77U1 for additional connection details to bridges without sidewalks.
2. Additional details of posts, blocks and hardware are shown on Revised Standard Plans RSP A77M1, RSP A77N1 and RSP A77N2.
3. For additional details of Transition Railing (Type WB-31), see Revised Standard Plan RSP A77U4. Transition Railing (Type WB-31) transitions the 12 gauge MGS railing section to a heavier gage nested thrie beam railing section which is connected to the concrete bridge railing.
4. For typical use of Connection Detail AA, see Layout Types 12A and 12B on Revised Standard Plan RSP A77Q1, Layout Types 12C and 12D on Revised Standard Plan RSP A77Q2, and Layout Type 12E on Revised Standard Plan RSP A77Q3.
5. For typical use of Connection Detail CC, see Layout Types 12AA and 12BB on Revised Standard Plan RSP A77Q4 and Layout Type 12CC on Revised Standard Plan RSP A77Q5.
6. Where the height of the bridge railing exceeds the height of the thrie beam railing by more than 1" at Connection Detail AA and connection Detail CC, taper the top of the end of the bridge railing at 4:1 to match the top elevation of the thrie beam railing.
7. For details of End Cap (Type TC), see Revised Standard Plan RSP A77U4.
8. See Revised Standard Plan RSP A77U4 for additional details regarding depth dimension for straight metal box spacer.

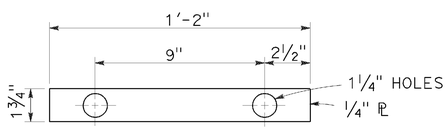

PLATE 'A'

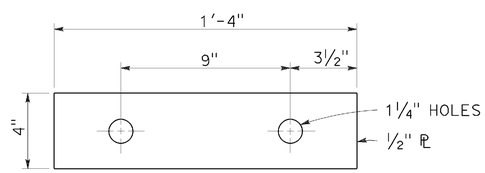

PLATE 'B'
(For backside of connection BB)

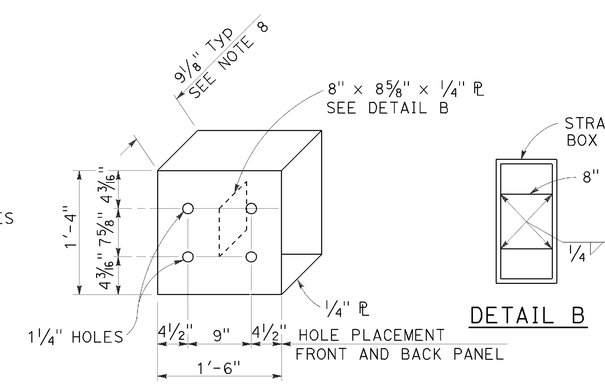

DETAIL A

STRAIGHT METAL BOX SPACER

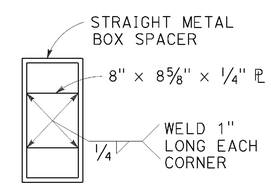

DETAIL B

STATE OF CALIFORNIA
DEPARTMENT OF TRANSPORTATION

MIDWEST GUARDRAIL SYSTEM CONNECTIONS TO BRIDGE RAILINGS WITHOUT SIDEWALKS DETAILS No. 2

NO SCALE

RSP A77U2 DATED JULY 19, 2013 SUPPLEMENTS THE STANDARD PLANS BOOK DATED 2010.

REVISED STANDARD PLAN RSP A77U2

2010 REVISED STANDARD PLAN RSP A77U2

DATE PLOTTED => 21-JUN-2016
TIME PLOTTED => 13:54

Dist	COUNTY	ROUTE	POST MILES TOTAL PROJECT	SHEET No.	TOTAL SHEETS
02	Sis	5	R57.8/R58.5	64	106

Randell D. Hiatt
REGISTERED CIVIL ENGINEER

July 19, 2013
PLANS APPROVAL DATE

REGISTERED PROFESSIONAL ENGINEER Randell D. Hiatt No. C50200 Exp. 6-30-15 CIVIL STATE OF CALIFORNIA

THE STATE OF CALIFORNIA OR ITS OFFICERS OR AGENTS SHALL NOT BE RESPONSIBLE FOR THE ACCURACY OR COMPLETENESS OF SCANNED COPIES OF THIS PLAN SHEET.

TO ACCOMPANY PLANS DATED 06-15-16

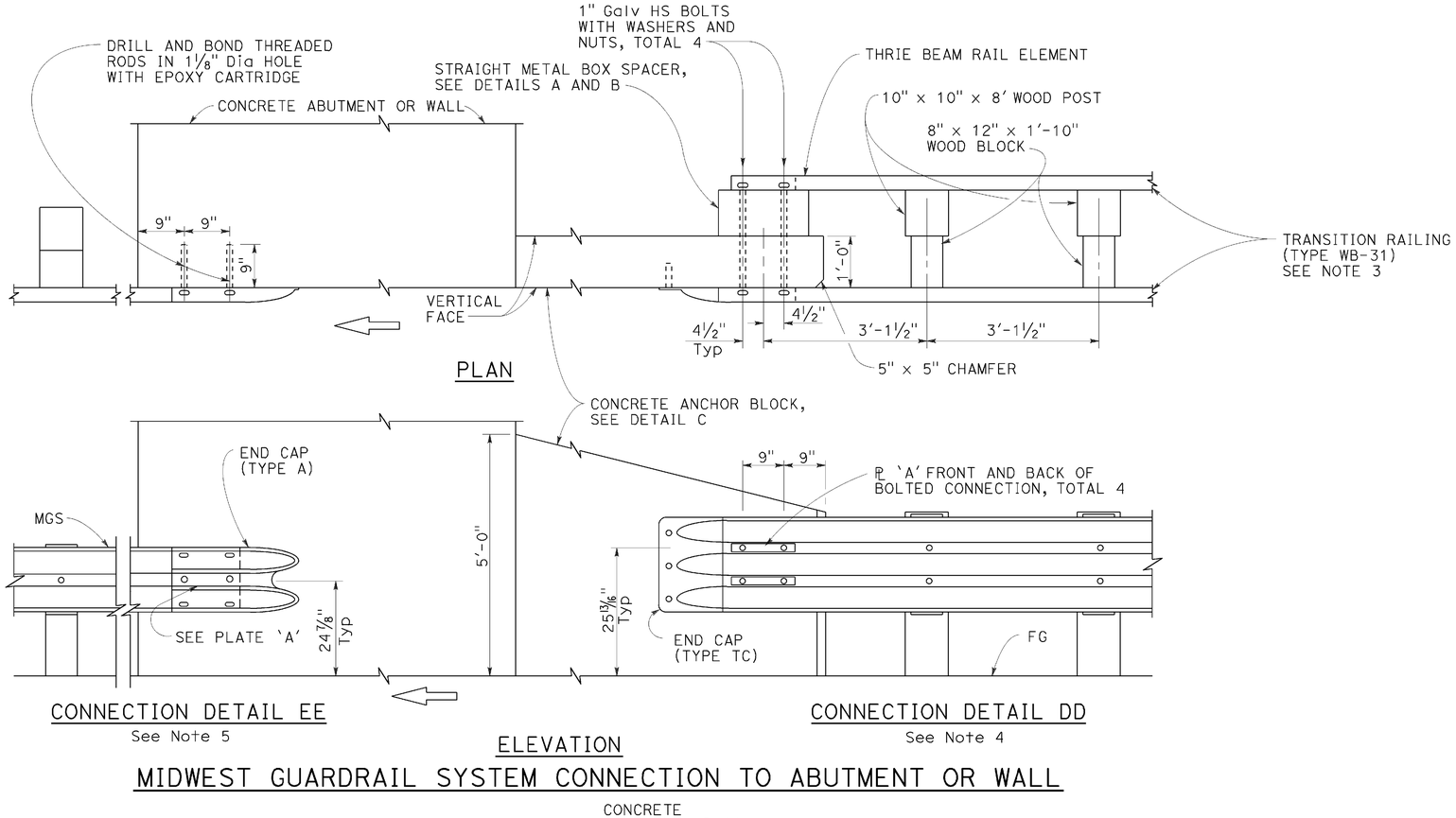

MIDWEST GUARDRAIL SYSTEM CONNECTION TO ABUTMENT OR WALL

NOTES:

1. These connection details apply to abutments and walls.
2. Additional details of posts, blocks and hardware are shown on Revised Standard Plans RSP A77M1, RSP A77N1 and RSP A77N2.
3. For additional details of Transition Railing (Type WB-31), see Revised Standard Plan RSP A77U4. Transition Railing (Type WB-31) transitions the 12 gauge MGS railing section to a heavier gage nested thrie beam railingsection which is connected to the concrete anchor block.
4. For typical use of Connection Details DD, see Layout Types 12A and 12B on Revised Standard Plan RSP A77Q1 and Layout Types 12C and 12D on Revised Standard Plan RSP A77Q2.
5. For typical use of Connection Detail EE, see Layout Type 12D on Revised Standard Plan RSP A77Q2 and Layout Type 12DD on Revised Standard Plan RSP A77Q5.

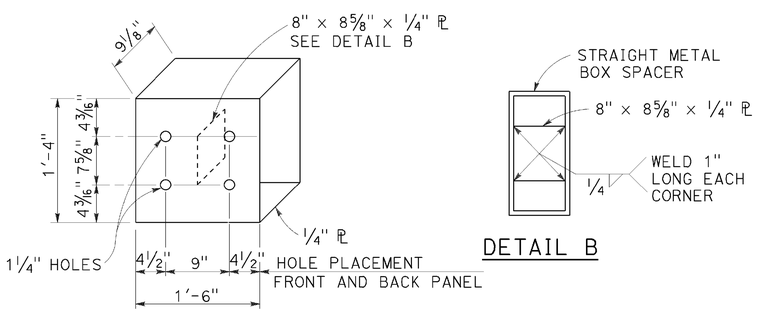

STRAIGHT METAL BOX SPACER

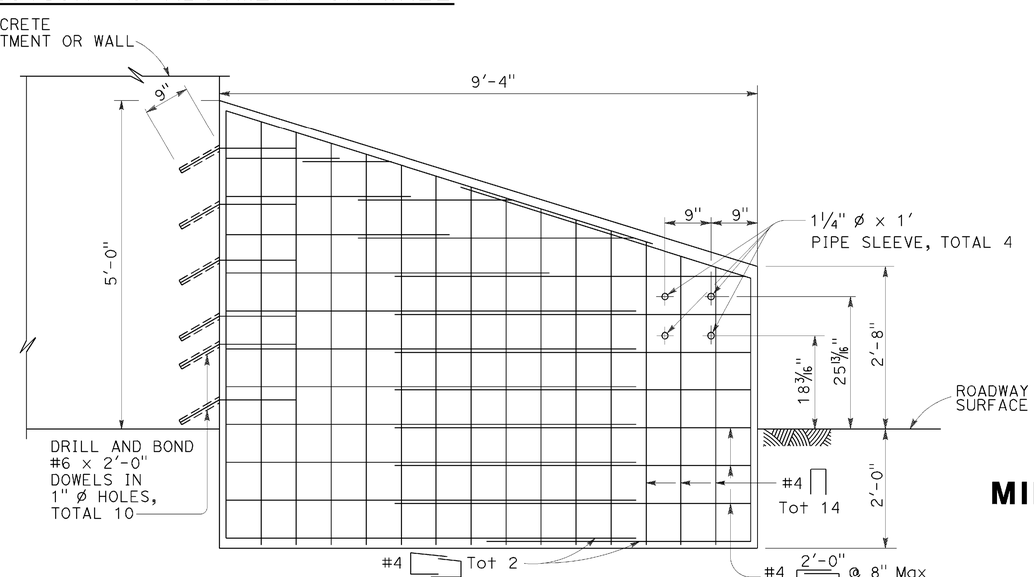

ANCHOR BLOCK FOR TRANSITION RAILING CONNECTION

DETAIL C

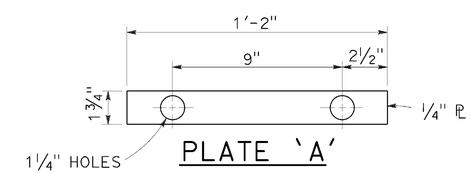

STATE OF CALIFORNIA
DEPARTMENT OF TRANSPORTATION

MIDWEST GUARDRAIL SYSTEM CONNECTIONS TO ABUTMENTS AND WALLS

NO SCALE

RSP A77U3 DATED JULY 19, 2013 SUPPLEMENTS THE STANDARD PLANS BOOK DATED 2010.

REVISED STANDARD PLAN RSP A77U3

2010 REVISED STANDARD PLAN RSP A77U3

DATE PLOTTED => 21-JUN-2016
TIME PLOTTED => 13:54

Dist	COUNTY	ROUTE	POST MILES TOTAL PROJECT	SHEET No.	TOTAL SHEETS
02	Sis	5	R57.8/R58.5	65	106

Randell D. Hiatt
REGISTERED CIVIL ENGINEER

October 30, 2015
PLANS APPROVAL DATE

REGISTERED PROFESSIONAL ENGINEER Randell D. Hiatt No. C50200 Exp. 6-30-17 CIVIL STATE OF CALIFORNIA

THE STATE OF CALIFORNIA OR ITS OFFICERS OR AGENTS SHALL NOT BE RESPONSIBLE FOR THE ACCURACY OR COMPLETENESS OF SCANNED COPIES OF THIS PLAN SHEET.

TO ACCOMPANY PLANS DATED 06-15-16

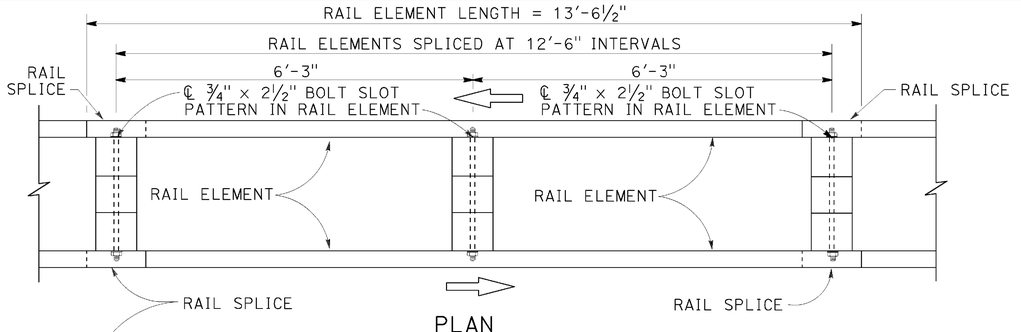

PLAN

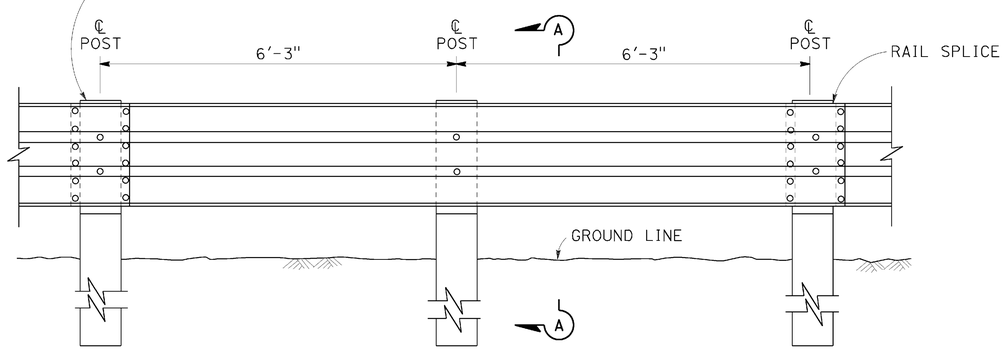

ELEVATION

DOUBLE THRIE BEAM BARRIER

(Wood post and blocks)
See Note 1

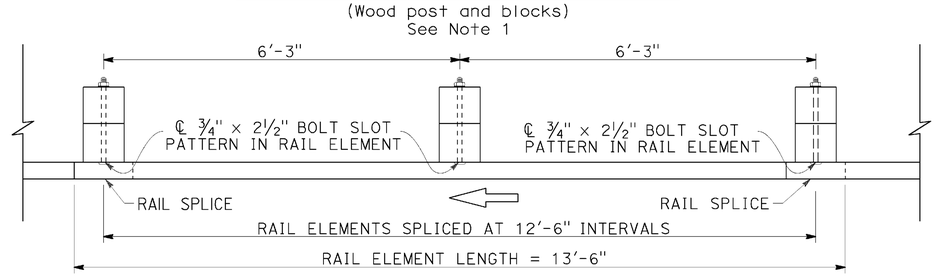

PLAN

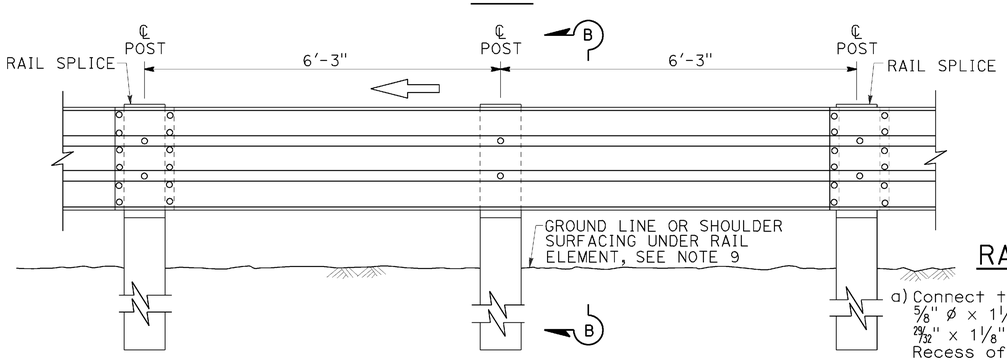

ELEVATION

SINGLE THRIE BEAM BARRIER

(Wood post and blocks)
See Note 1

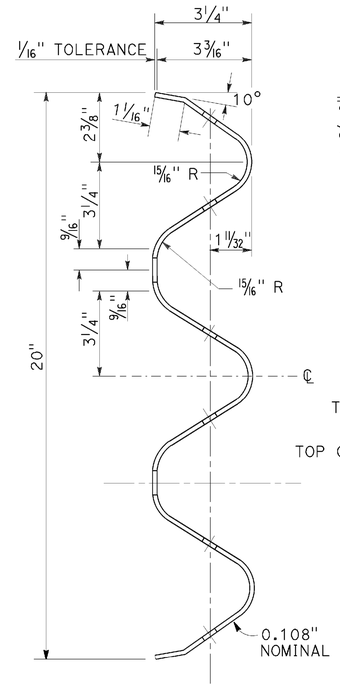

SECTION THRU RAIL ELEMENT

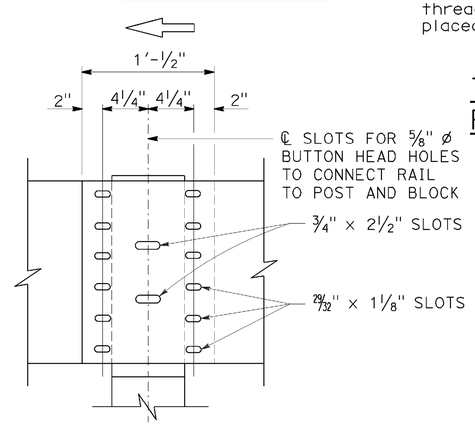

ELEVATION

RAIL ELEMENT SPLICE DETAIL

a) Connect the overlapped ends of the thrie beam rail elements with ⅝" ø x 1¼" button head oval shoulder bolts inserted into the 29/32" x 1⅛" slots and bolted together with ⅝" ø recessed hex nuts. Recess of hex nut points toward rail element. A total of 12 bolts and nuts are to be used at each rail splice connection.

b) The ends of the rail elements are to be overlapped in the direction of traffic (see details).

c) Where end cap is to be attached to the end of a rail element, a total of 4 of the above described splice bolts and nuts are to be used. Where a return cap is to be attached to the ends of rail elements, a total of 8 of the above described splice bolts and nuts are to be used.

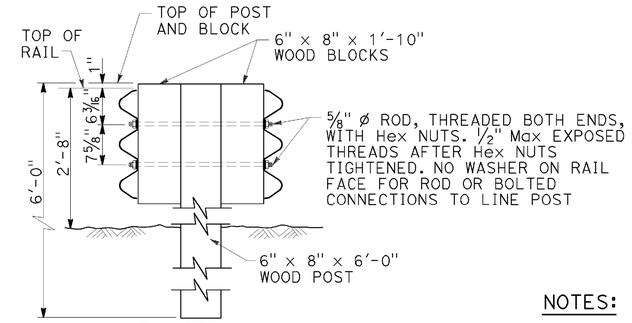

SECTION A-A

TYPICAL WOOD LINE POST INSTALLATION

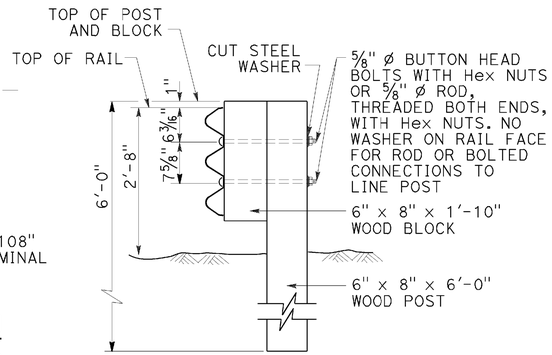

Where bolts are used, install so that the threaded end of the bolts and nuts are placed away from traffic side of rail.

SECTION B-B

TYPICAL WOOD LINE POST INSTALLATION

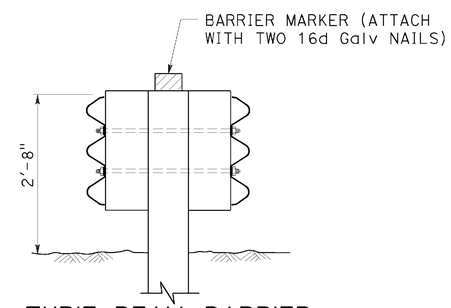

THRIE BEAM BARRIER DELINEATION

See Note 8

NOTES:

1. For details of steel post thrie beam barrier, see Standard Plan A78B.
2. For details of standard hardware, posts and blocks used to construct thrie beam barrier, see Standard Plan A78C1 and Revised Standard Plan RSP A78C2.
3. Thrie beam barrier post spacing to be 6'-3" center to center, except as otherwise noted.
4. Top of barrier rail to be 2'-8" above ground line or shoulder surfacing under the rail element.
5. For barrier end treatments and barrier connections, see Standard Plans A78E3 and A78G, and Revised Standard Plans RSP A78E1, RSP A78E2 RSP A77Q1, RSP A77Q2 and RSP A78H.
6. For connection to Concrete Barrier (Type 60), see Standard Plans A78I.
7. For details of thrie beam barrier on bridge see Standard Plan A78D2. For details of thrie beam barrier at fixed object, see Revised Standard Plan RSP A78D1.
8. See Project Plans for barrier delineation locations. Spacing of barrier markers to match spacing of raised pavement markers on adjacent median edgeline pavement delineation.
9. Install posts in soil.

STATE OF CALIFORNIA
DEPARTMENT OF TRANSPORTATION

THRIE BEAM BARRIER STANDARD BARRIER RAILING SECTION (WOOD POST WITH WOOD BLOCK)

NO SCALE

RSP A78A DATED OCTOBER 30, 2015 SUPERSEDES RSP A78A DATED JULY 19, 2013 AND STANDARD PLAN A78A DATED MAY 20, 2011 - PAGE 89 OF THE STANDARD PLANS BOOK DATED 2010.

REVISED STANDARD PLAN RSP A78A

2010 REVISED STANDARD PLAN RSP A78A

DATE PLOTTED => 21-JUN-2016
TIME PLOTTED => 13:54

Dist	COUNTY	ROUTE	POST MILES TOTAL PROJECT	SHEET No.	TOTAL SHEETS
02	Sis	5	R57.8/R58.5	66	106

Randell D. Hiatt
REGISTERED CIVIL ENGINEER

July 19, 2013
PLANS APPROVAL DATE

REGISTERED PROFESSIONAL ENGINEER
Randell D. Hiatt
No. C50200
Exp. 6-30-15
CIVIL
STATE OF CALIFORNIA

THE STATE OF CALIFORNIA OR ITS OFFICERS OR AGENTS SHALL NOT BE RESPONSIBLE FOR THE ACCURACY OR COMPLETENESS OF SCANNED COPIES OF THIS PLAN SHEET.

TO ACCOMPANY PLANS DATED 06-15-16

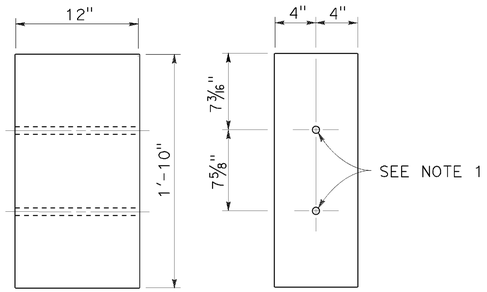

SIDE FRONT

8" x 12"
WOOD BLOCK

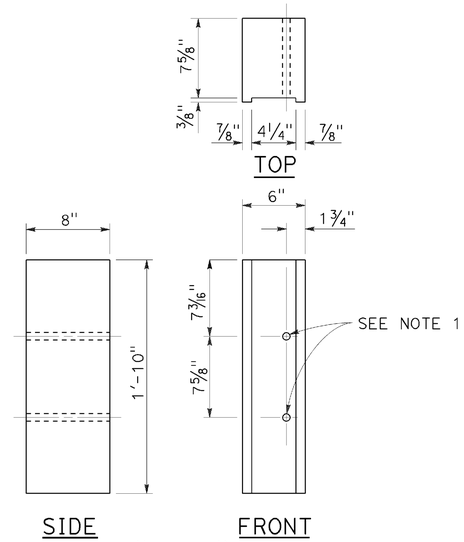

SIDE FRONT

6" x 8"
NOTCHED WOOD BLOCK
See Notes 3 and 5

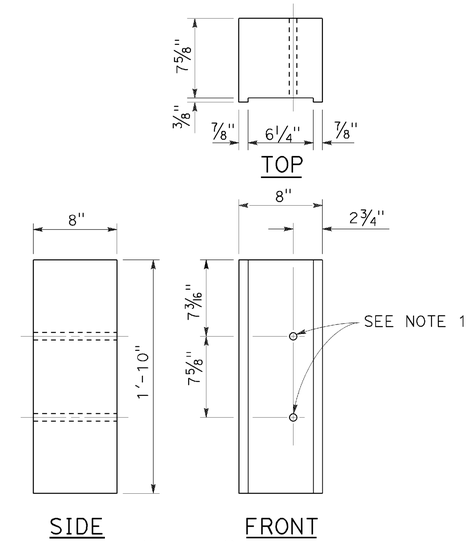

SIDE FRONT

8" x 8"
NOTCHED WOOD BLOCK
See Notes 4 and 5

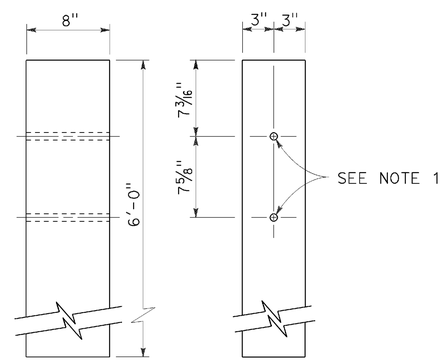

SIDE FRONT

6" x 8"
WOOD POST

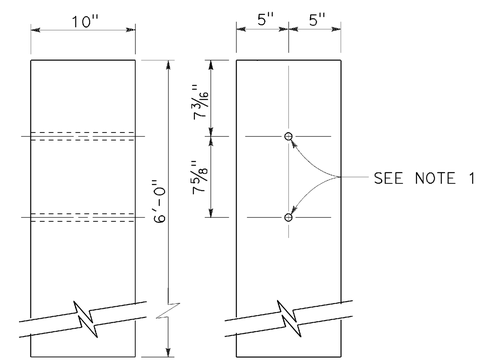

SIDE FRONT

10" x 10"
WOOD POST

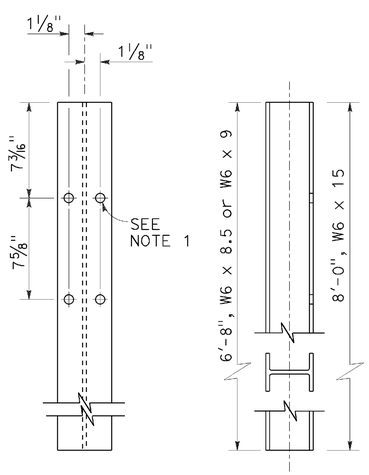

FRONT SIDE

STEEL POST
W6 x 9 or W6 x 8.5 and W6 x 15

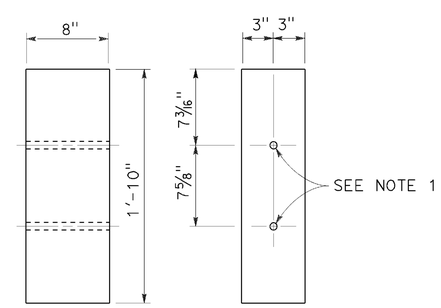

SIDE FRONT

6" x 8"
WOOD BLOCK

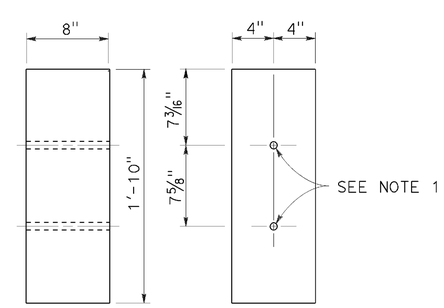

SIDE FRONT

8" x 8"
WOOD BLOCK

NOTES:

1. All holes in steel post to be 13/16" Dia maximum. Holes in wood posts and wood blocks to be 3/4" Dia ±1/16".
2. Dimensions shown for wood post are nominal.
3. For use with W6 x 8.5 or W6 x 9 steel post.
4. For use with W6 x 15 steel post.
5. Notched face of block faces steel post.

STATE OF CALIFORNIA
DEPARTMENT OF TRANSPORTATION

THRIE BEAM BARRIER POST AND BLOCK DETAILS

NO SCALE

RSP A78C2 DATED JULY 19, 2013 SUPERSEDES STANDARD PLAN A78C2 DATED MAY 20, 2011 - PAGE 92 OF THE STANDARD PLANS BOOK DATED 2010.

REVISED STANDARD PLAN RSP A78C2

2010 REVISED STANDARD PLAN RSP A78C2

DATE PLOTTED => 21-JUN-2016
TIME PLOTTED => 13:55

Dist	COUNTY	ROUTE	POST MILES TOTAL PROJECT	SHEET No.	TOTAL SHEETS
02	Sis	5	R57.8/R58.5	67	106

Randell D. Hiatt
REGISTERED CIVIL ENGINEER

July 19, 2013
PLANS APPROVAL DATE

REGISTERED PROFESSIONAL ENGINEER
Randell D. Hiatt
No. C50200
Exp. 6-30-15
CIVIL
STATE OF CALIFORNIA

THE STATE OF CALIFORNIA OR ITS OFFICERS OR AGENTS SHALL NOT BE RESPONSIBLE FOR THE ACCURACY OR COMPLETENESS OF SCANNED COPIES OF THIS PLAN SHEET.

TO ACCOMPANY PLANS DATED 06-15-16

NOTES:

1. Line post, blocks and hardware to be used are shown on Standard Plans A78A, A78B and A78C1 and Revised Standard Plan RSP A78C2.
2. Post spacing to be 6'-3" center to center, except as otherwise noted.
3. Except as noted, line posts are 6" x 8" x 6'-0" wood with 6" x 8" x 1'-10" wood blocks. (W6 x 8.5 or W6 x 9) steel posts, 6'-8" in length, with 6" x 8" x 1'-10" notched wood blocks or notched recycled plastic blocks may be used for 6" x 8" x 6'-0" wood posts with 6" x 8" x 1'-10" wood blocks where applicable and when specified.
4. For Transition Railing (Type DTB) details, see Standard Plan A78K.
5. The 15:1 or flatter flare is measured off of the edge of traveled way.

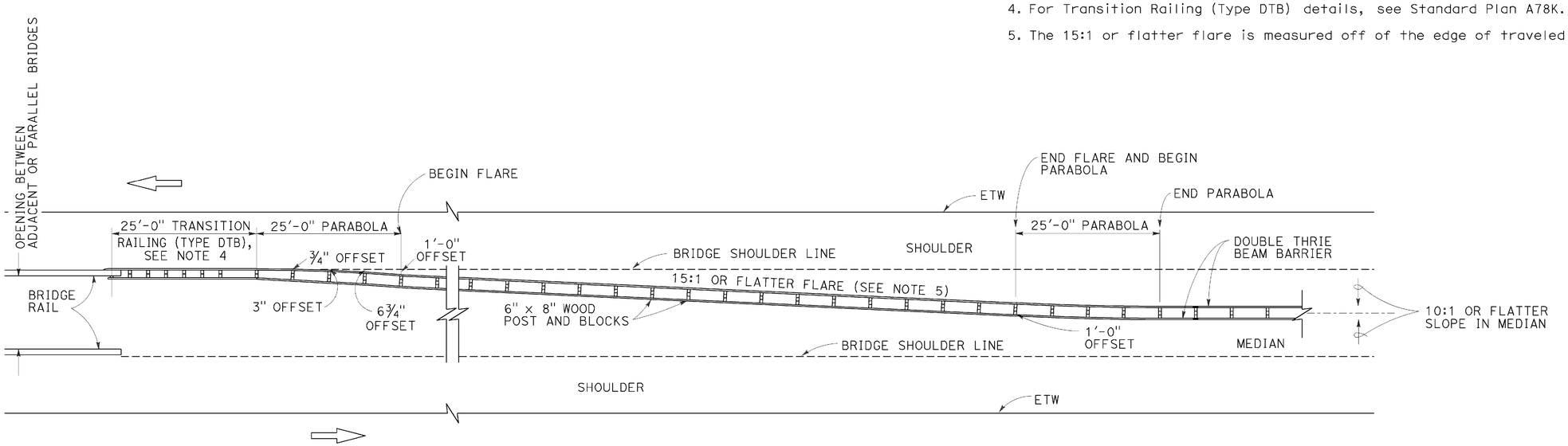

TYPE 25A CONNECTION LAYOUT

STATE OF CALIFORNIA
DEPARTMENT OF TRANSPORTATION

THRIE BEAM BARRIER TYPICAL LAYOUT FOR CONNECTION TO BRIDGE RAILING

NO SCALE

RSP A78H DATED JULY 19, 2013 SUPERSEDES STANDARD PLAN A78H
DATED MAY 20, 2011 - PAGE 105 OF THE STANDARD PLANS BOOK DATED 2010.

REVISED STANDARD PLAN RSP A78H

2010 REVISED STANDARD PLAN RSP A78H

DATE PLOTTED => 21-JUN-2016
TIME PLOTTED => 13:55

Dist	COUNTY	ROUTE	POST MILES TOTAL PROJECT	SHEET No.	TOTAL SHEETS
02	Sis	5	R57.8/R58.5	68	106

REGISTERED CIVIL ENGINEER

July 19, 2013
PLANS APPROVAL DATE

REGISTERED PROFESSIONAL ENGINEER Michael Janzen No. 44788 Exp. 03-31-14 CIVIL STATE OF CALIFORNIA

THE STATE OF CALIFORNIA OR ITS OFFICERS OR AGENTS SHALL NOT BE RESPONSIBLE FOR THE ACCURACY OR COMPLETENESS OF SCANNED COPIES OF THIS PLAN SHEET.

TO ACCOMPANY PLANS DATED 06-15-16

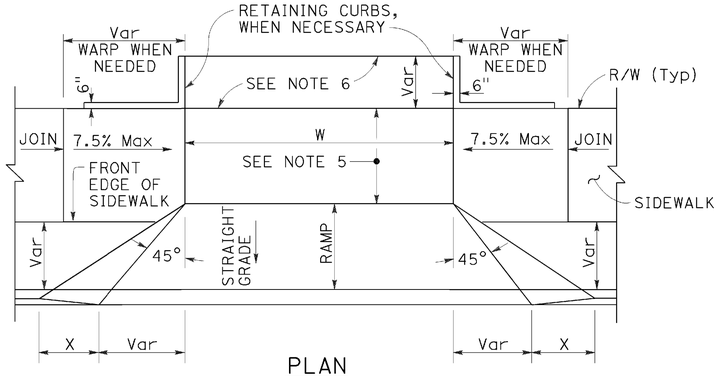

PLAN

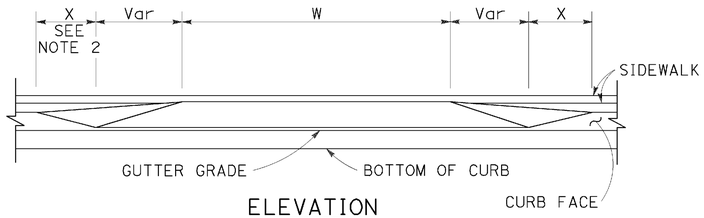

ELEVATION

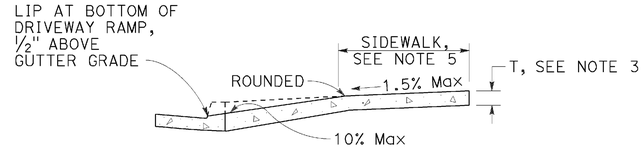

CASE A

Typical driveway, sidewalk not depressed

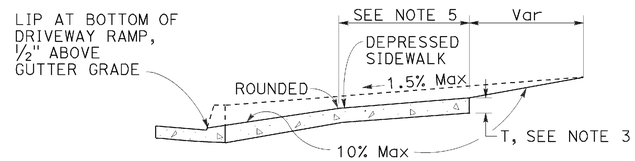

CASE B

Driveway with depressed sidewalk

SECTIONS

DRIVEWAYS

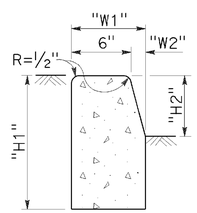

TYPE A1 CURBS

See Table A

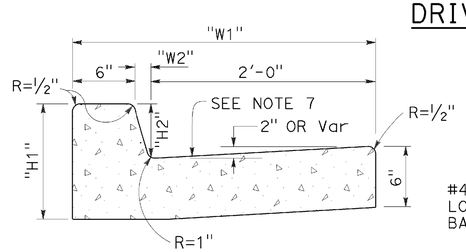

TYPE A2 CURBS

See Table A

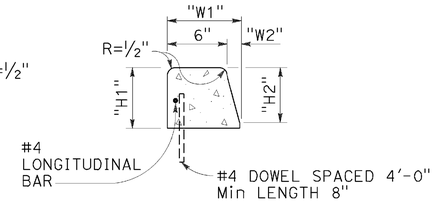

TYPE A3 CURBS

Superimposed on existing pavement
See Table A

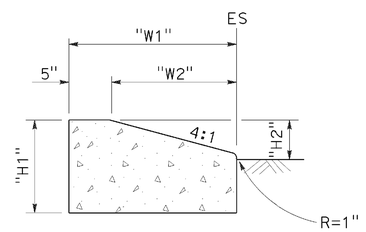

TYPE D CURBS

See Table A

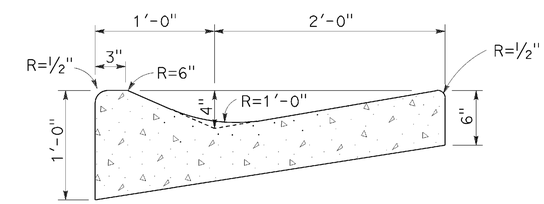

TYPE E CURB

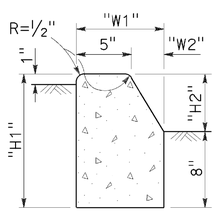

TYPE B1 CURBS

See Table A

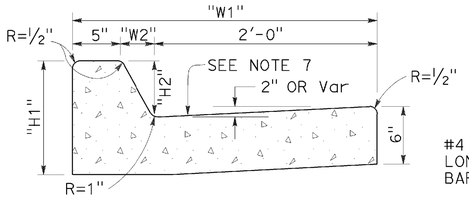

TYPE B2 CURBS

See Table A

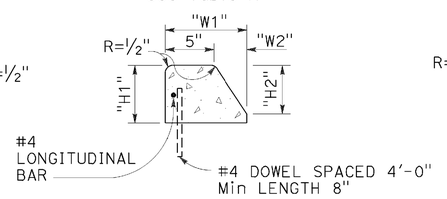

TYPE B3 CURBS

Superimposed on existing pavement
See Table A

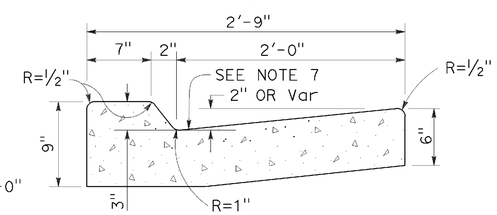

TYPE B4 CURBS

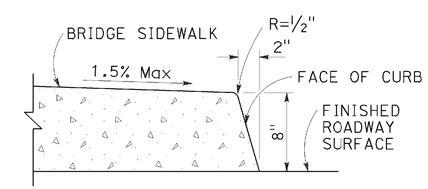

TYPE H CURB

On Bridges

CURBS

TABLE A

CURB TYPE	DIMENSIONS			
	"H1"	"H2"	"W1"	"W2"
A1-6	1'-2"	6"	7½"	1½"
A1-8	1'-4"	8"	8"	2"
A2-6	1'-0"	6"	2'-7½"	1½"
A2-8	1'-2"	8"	2'-8"	2"
A3-6	6"	5"	7¼"	1¼"
A3-8	8"	7"	7¾"	1¾"
B1-4	1'-0"	4"	7½"	2½"
B1-6	1'-2"	6"	9"	4"
B2-4	10"	4"	2'-7½"	2½"
B2-6	1'-0"	6"	2'-9"	4"
B3-4	4"	3"	7"	2"
B3-6	6"	5"	8½"	3½"
D-4	10"	4"	1'-6"	1'-1"
D-6	1'-0"	6"	2'-2"	1'-9"

CURB QUANTITIES

TYPE	CUBIC YARDS PER LINEAR FOOT
A1-6	0.02585
A1-8	0.03084
A2-6	0.05903
A2-8	0.06379
A3-6	0.01036
A3-8	0.01435
B1-4	0.02185
B1-6	0.02930
B2-4	0.05515
B2-6	0.06171
B3-4	0.00641
B3-6	0.01074
B4	0.05709
D-4	0.04083
D-6	0.06804
E	0.06661

NOTES:

1. Case A driveway section typically applies.
2. X=3'-0" except for curb heights over 10" where 4:1 slopes shall be used on curb slope.
3. Sidewalk and ramp thickness "T" at driveway shall be 4" for residental and 6" for commercial.
4. Difference in slope of the driveway ramp and the slope of a line between the gutter and a point on the roadway 5'-0" from gutter line shall not exceed 15%. Reduce driveway ramp slope, not gutter slope, where required.
5. Minimum width of clear passageway for sidewalk shall be 4'-2".
6. Retaining curbs and acquisition of construction easement may be necessary for narrow sidewalks or curb heights in excess of 6".
7. Across the pedestrian route at curb ramp locations, the gutter pan slope shall not exceed 1" of depth for each 2'-0" of width.

STATE OF CALIFORNIA
DEPARTMENT OF TRANSPORTATION

CURBS AND DRIVEWAYS

NO SCALE

RSP A87A DATED JULY 19, 2013 SUPERSEDES STANDARD PLAN A87A
DATED MAY 20, 2011 - PAGE 119 OF THE STANDARD PLANS BOOK DATED 2010.

REVISED STANDARD PLAN RSP A87A

2010 REVISED STANDARD PLAN RSP A87A

DATE PLOTTED => 21-JUN-2016
TIME PLOTTED => 13:55

Dist	COUNTY	ROUTE	POST MILES TOTAL PROJECT	SHEET No.	TOTAL SHEETS
02	Sis	5	R57.8/R58.5	69	106

REGISTERED CIVIL ENGINEER

January 15, 2016
PLANS APPROVAL DATE

REGISTERED PROFESSIONAL ENGINEER
Michael Janzen
No. 44788
Exp. 3-31-16
CIVIL
STATE OF CALIFORNIA

THE STATE OF CALIFORNIA OR ITS OFFICERS OR AGENTS SHALL NOT BE RESPONSIBLE FOR THE ACCURACY OR COMPLETENESS OF SCANNED COPIES OF THIS PLAN SHEET.

TO ACCOMPANY PLANS DATED 06-15-16

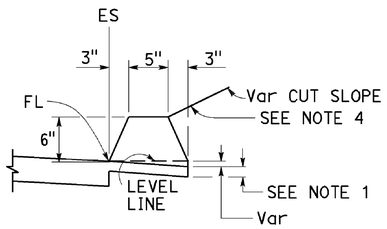

TYPE A
See Notes 3 and 5

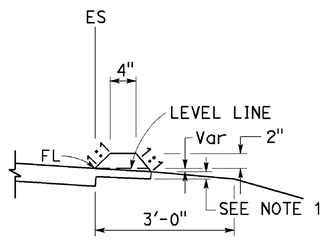

TYPE C

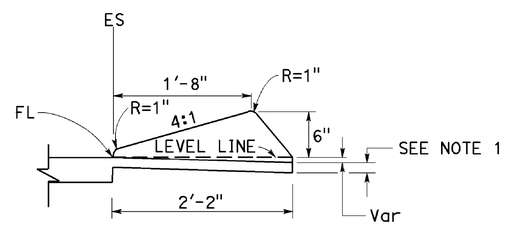

TYPE D

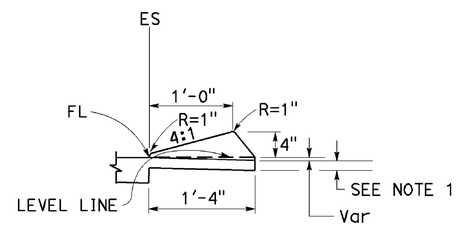

TYPE E

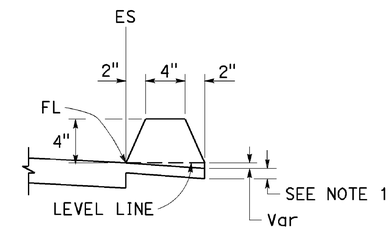

TYPE F
See Note 5

DIKES

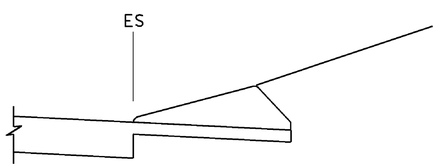

CASE C-1
Cut Slope

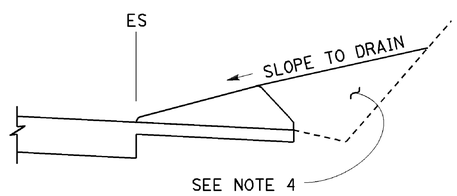

CASE C-2
Cut Slope

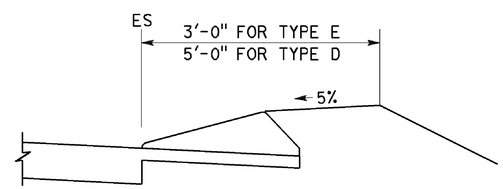

CASE F

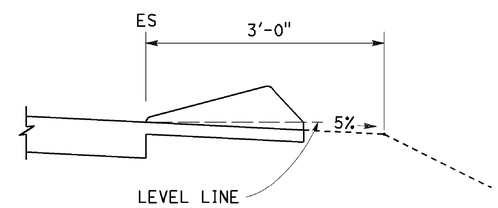

CASE R
See Note 2

TYPE D AND E BACKFILL DETAILS

NOTES:

1. For HMA shoulders only, extend top layer of HMA placed on the shoulder under dike with no joint at the ES. For projects with OGFC shoulders, do not extend OGFC under dike. See project plans for modified dike detail.
2. Case R applies to retrofit only projects where restrictive conditions do not provide enough width for Case F backfill.
3. Type A dike only to be used where restrictive slope conditions do not provide enough width to use Type D or Type E dike.
4. Fill and compact with excavated material to top of dike.
5. Use Type A or F dike, where dike is required with guardrail installations. See Revised Standard Plan RSP A77N4 for dike positioning details. See Revised Standard Plan RSP A77N3 for hinge point offsets with guardrail.

DIKE QUANTITIES

TYPE	CUBIC YARDS PER LINEAR FOOT
A	0.0135
C	0.0038
D	0.0293
E	0.0130
F	0.0066

Quantities based on 5% cross slope.

STATE OF CALIFORNIA
DEPARTMENT OF TRANSPORTATION

HOT MIX ASPHALT DIKES

NO SCALE

RSP A87B DATED JANUARY 15, 2016 SUPERSEDES RSP A87B DATED JULY 19, 2013 AND STANDARD PLAN A87B DATED MAY 20, 2011 - PAGE 120 OF THE STANDARD PLANS BOOK DATED 2010.

REVISED STANDARD PLAN RSP A87B

2010 REVISED STANDARD PLAN RSP A87B

DATE PLOTTED => 21-JUN-2016
TIME PLOTTED => 13:55

Dist	COUNTY	ROUTE	POST MILES TOTAL PROJECT	SHEET No.	TOTAL SHEETS
02	Sis	5	R57.8/R58.5	70	106

William K. Farnbach
REGISTERED CIVIL ENGINEER

July 19, 2013
PLANS APPROVAL DATE

REGISTERED PROFESSIONAL ENGINEER William K. Farnbach No. C49042 Exp. 9-30-14 CIVIL STATE OF CALIFORNIA

THE STATE OF CALIFORNIA OR ITS OFFICERS OR AGENTS SHALL NOT BE RESPONSIBLE FOR THE ACCURACY OR COMPLETENESS OF SCANNED COPIES OF THIS PLAN SHEET.

TO ACCOMPANY PLANS DATED 06-15-16

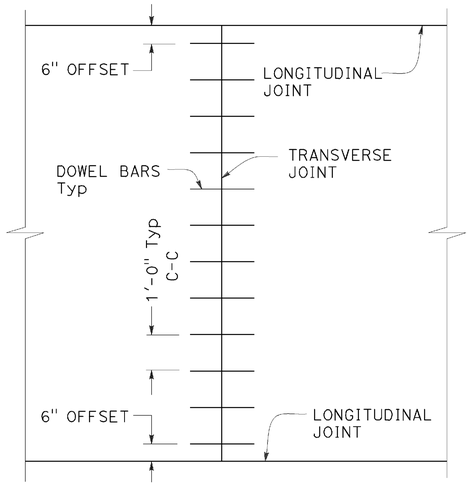

TRANSVERSE JOINT DOWEL BAR LAYOUT

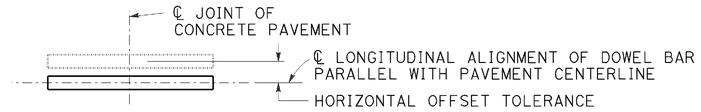

PLAN

HORIZONTAL OFFSET TOLERANCE

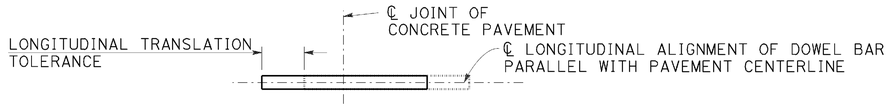

PLAN

LONGITUDINAL TRANSLATION TOLERANCE

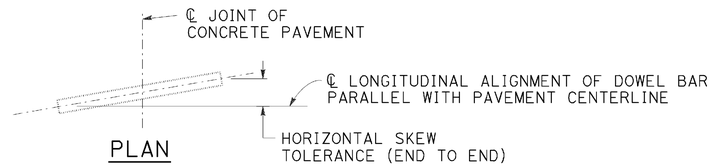

PLAN

HORIZONTAL SKEW TOLERANCE

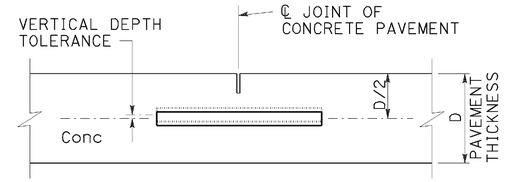

ELEVATION

VERTICAL DEPTH TOLERANCE

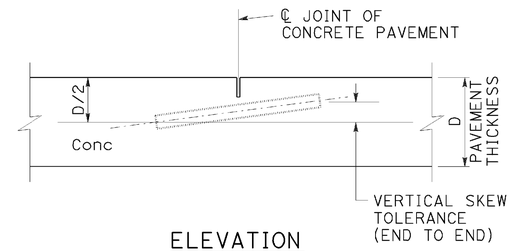

ELEVATION

VERTICAL SKEW TOLERANCE

NOTES:

1. See Revised Standard Plan RSP P1 for typical dowel bar placement and locations.
2. Where fresh concrete pavement is placed against new concrete or existing concrete pavement, rounding the corner of the existing concrete pavement is not required.
3. May also use ¾" Dia dowel bars 2'-4" ± ¼" in length. Center the length of dowel bars at the centerline of longitudinal joint.

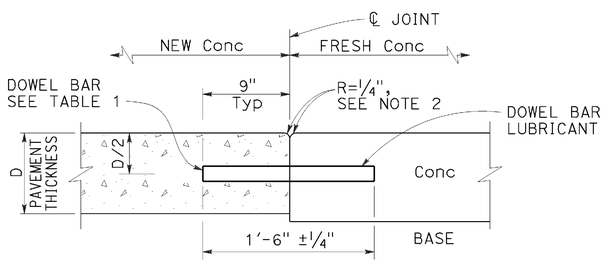

TRANSVERSE CONSTRUCTION JOINT DETAIL

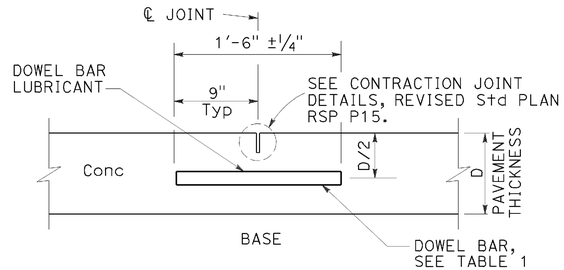

TRANSVERSE CONTRACTION JOINT

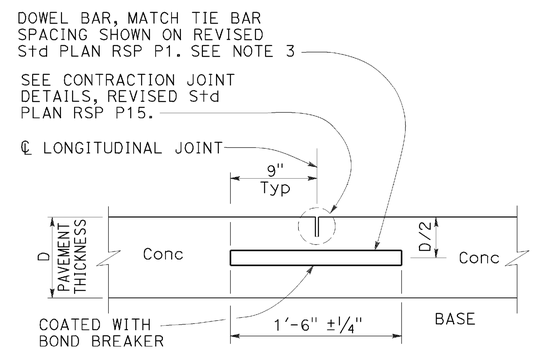

LONGITUDINAL CONTRACTION JOINT WITH DOWEL BARS

See Revised Std Plan RSP P18

TABLE 1

DOWEL BAR DIAMETER TABLE			
PAVEMENT THICKNESS	0.65'	> 0.65' - 0.85'	> 0.85'
MINIMUM DOWEL * BAR DIAMETER	1"	1¼"	1½"

* The drilled hole diameter must be ⅛" to 3/16" larger than the bar diameter.

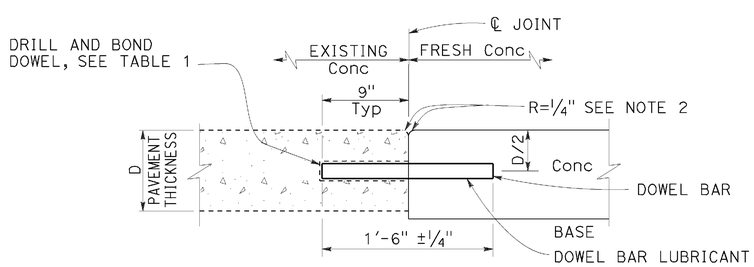

TRANSVERSE CONSTRUCTION JOINT FOR EXISTING CONCRETE PAVEMENT

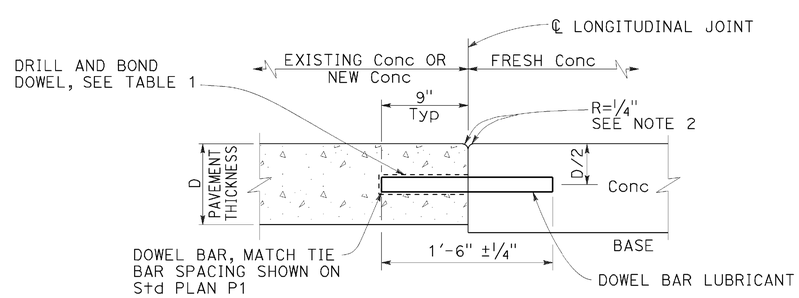

LONGITUDINAL CONSTRUCTION JOINT WITH DOWEL BARS

See Revised Std Plan RSP P18

STATE OF CALIFORNIA
DEPARTMENT OF TRANSPORTATION

CONCRETE PAVEMENT DOWEL BAR DETAILS

NO SCALE

RSP P10 DATED JULY 19, 2013 SUPERSEDES RSP P10 DATED APRIL 20, 2012 AND STANDARD PLAN P10 DATED MAY 20, 2011 - PAGE 131 OF THE STANDARD PLANS BOOK DATED 2010.

REVISED STANDARD PLAN RSP P10

2010 REVISED STANDARD PLAN RSP P10

DATE PLOTTED => 21-JUN-2016
TIME PLOTTED => 13:55

Dist	COUNTY	ROUTE	POST MILES TOTAL PROJECT	SHEET No.	TOTAL SHEETS
02	Sis	5	R57.8/R58.5	71	106

REGISTERED CIVIL ENGINEER

October 30, 2015
PLANS APPROVAL DATE

REGISTERED PROFESSIONAL ENGINEER Bruce D. Swanger No. C61257 Exp. 6-30-17 CIVIL STATE OF CALIFORNIA

THE STATE OF CALIFORNIA OR ITS OFFICERS OR AGENTS SHALL NOT BE RESPONSIBLE FOR THE ACCURACY OR COMPLETENESS OF SCANNED COPIES OF THIS PLAN SHEET.

TO ACCOMPANY PLANS DATED 06-15-16

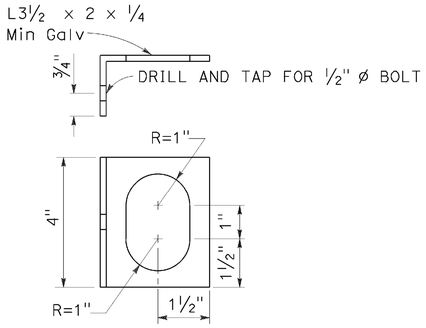

ALTERNATIVE CLIP BRACKET DETAIL

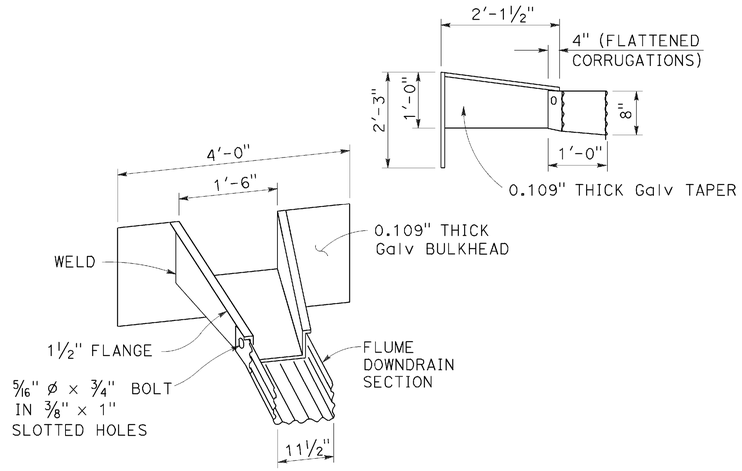

TAPERED INLET

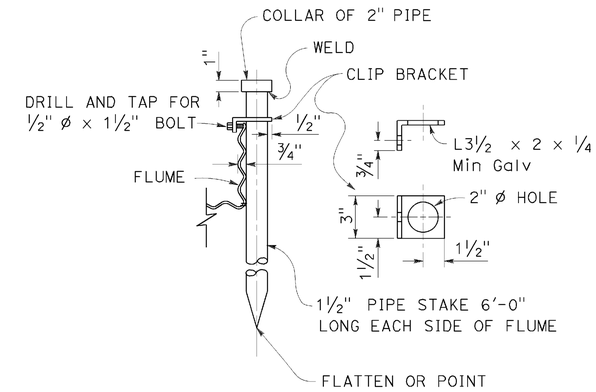

PIPE STAKE ANCHOR DETAIL

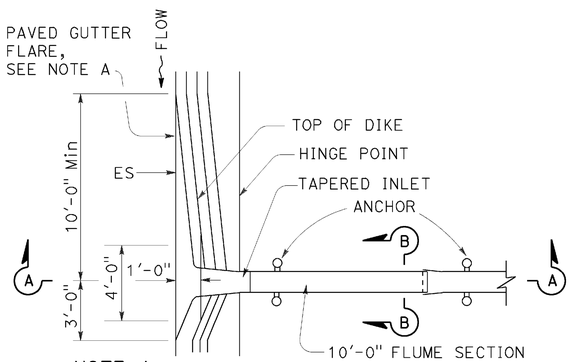

NOTE A

In sag location, use 10'-0" length of paved gutter flare on both sides of inlet.

PLAN

TAPERED INLET AND FLUME DOWNDRAIN

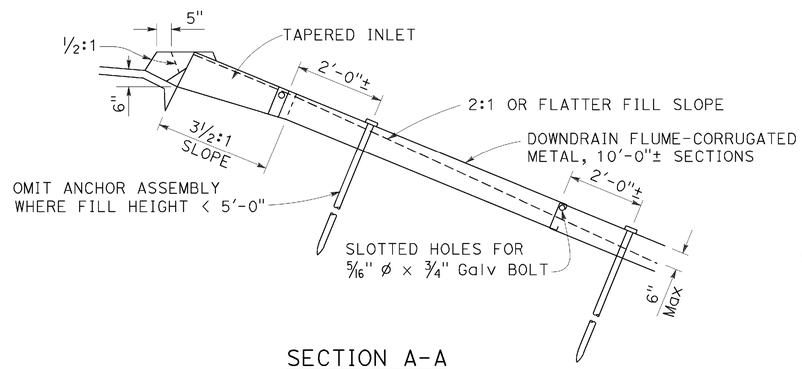

SECTION A-A

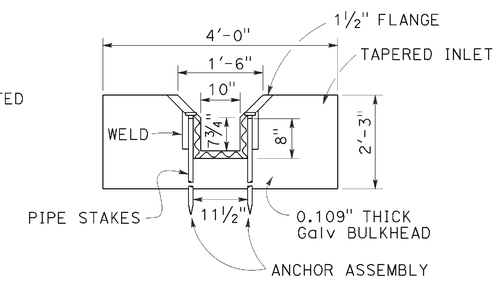

SECTION B-B

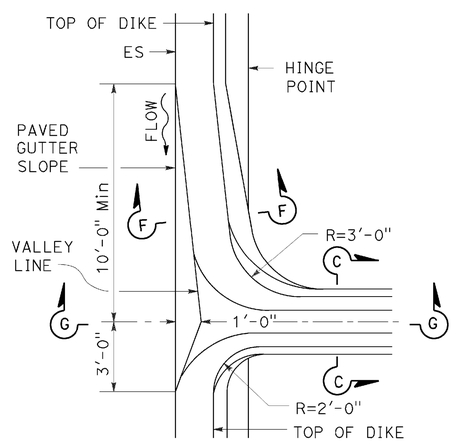

PLAN

MOUNTABLE DIKE

HOT MIX ASPHALT OVERSIDE DRAINS

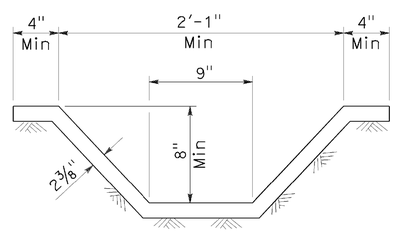

SECTION C-C

See Note 1

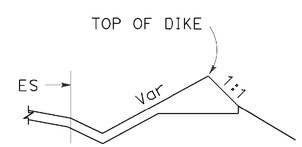

SECTION F-F

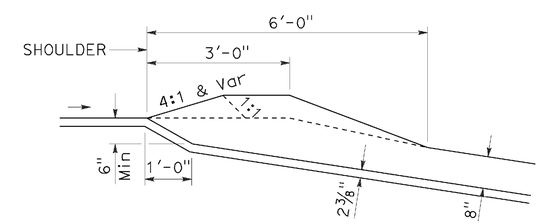

SECTION G-G

NOTE:

1. Cross section of slope ditch may be semicircular, vee or trapezoidal.

STATE OF CALIFORNIA
DEPARTMENT OF TRANSPORTATION

OVERSIDE DRAINS

NO SCALE

RSP D87D DATED OCTOBER 30, 2015 SUPERSEDES STANDARD PLAN D87D DATED MAY 20, 2011 - PAGE 185 OF THE STANDARD PLANS BOOK DATED 2010.

REVISED STANDARD PLAN RSP D87D

2010 REVISED STANDARD PLAN RSP D87D

DATE PLOTTED => 21-JUN-2016
TIME PLOTTED => 13:56

Dist	COUNTY	ROUTE	POST MILES TOTAL PROJECT	SHEET No.	TOTAL SHEETS
02	Sis	5	R57.8/R58.5	72	106

William K. Farnbach
REGISTERED CIVIL ENGINEER

October 30, 2015
PLANS APPROVAL DATE

REGISTERED PROFESSIONAL ENGINEER William K. Farnbach No. C49042 Exp. 9-30-16 CIVIL STATE OF CALIFORNIA

THE STATE OF CALIFORNIA OR ITS OFFICERS OR AGENTS SHALL NOT BE RESPONSIBLE FOR THE ACCURACY OR COMPLETENESS OF SCANNED COPIES OF THIS PLAN SHEET.

TO ACCOMPANY PLANS DATED 06-15-16

2010 REVISED STANDARD PLAN RSP D99A

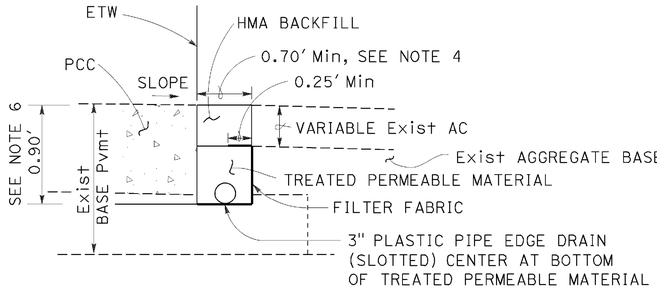

TYPE 1 PAVEMENT STRUCTURE DRAINAGE SYSTEM

(For existing highway facility)

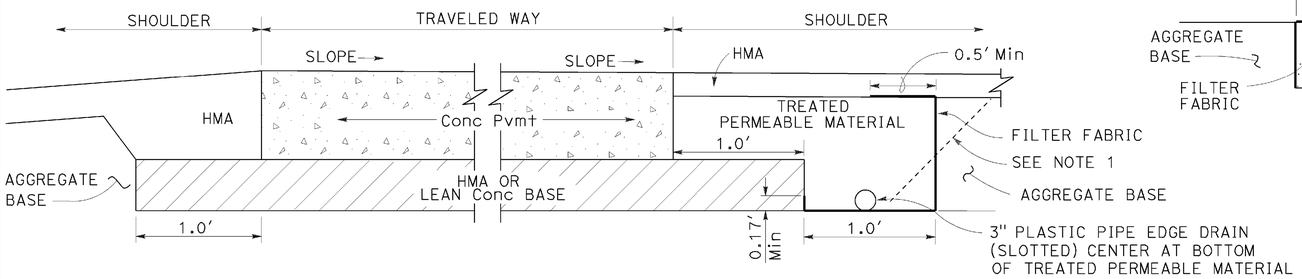

TYPE 2 PAVEMENT STRUCTURE DRAINAGE SYSTEM

(New construction)

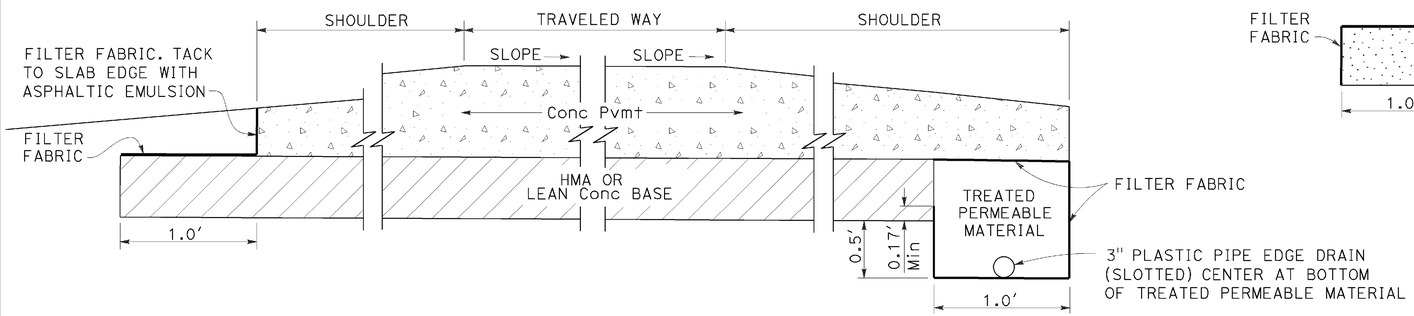

TYPE 3 PAVEMENT STRUCTURE DRAINAGE SYSTEM

(New construction)

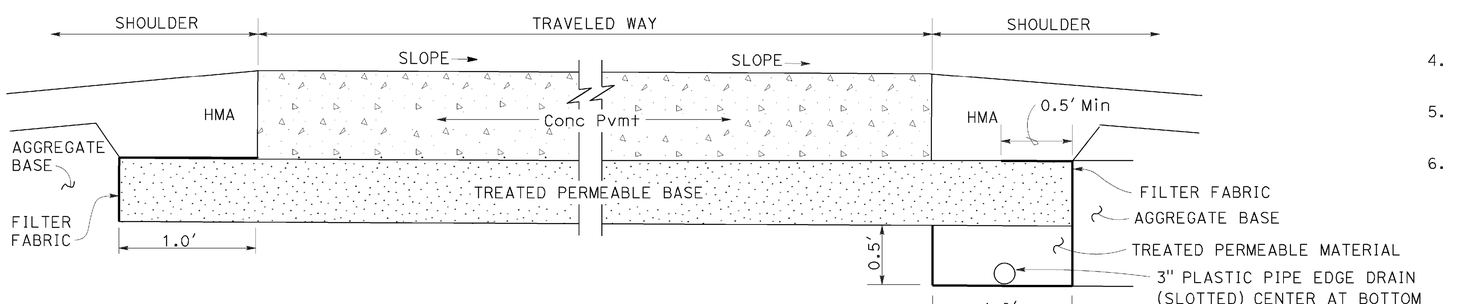

TYPE 4 PAVEMENT STRUCTURE DRAINAGE SYSTEM

(New construction)

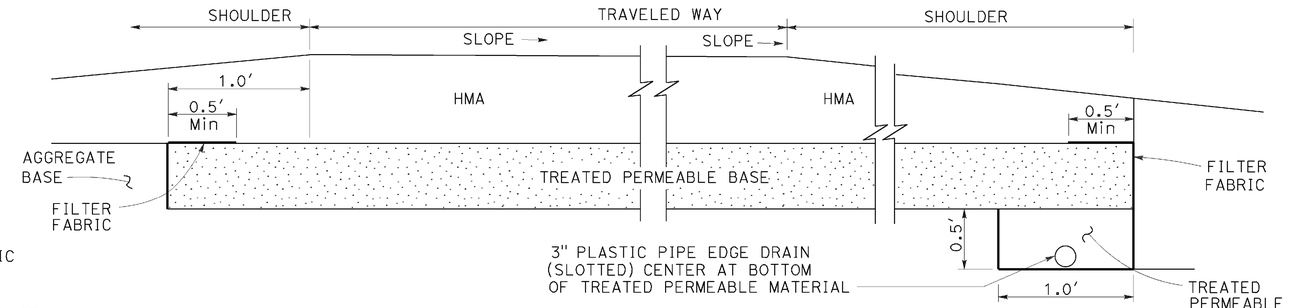

TYPE 5 PAVEMENT STRUCTURE DRAINAGE SYSTEM

(New construction)

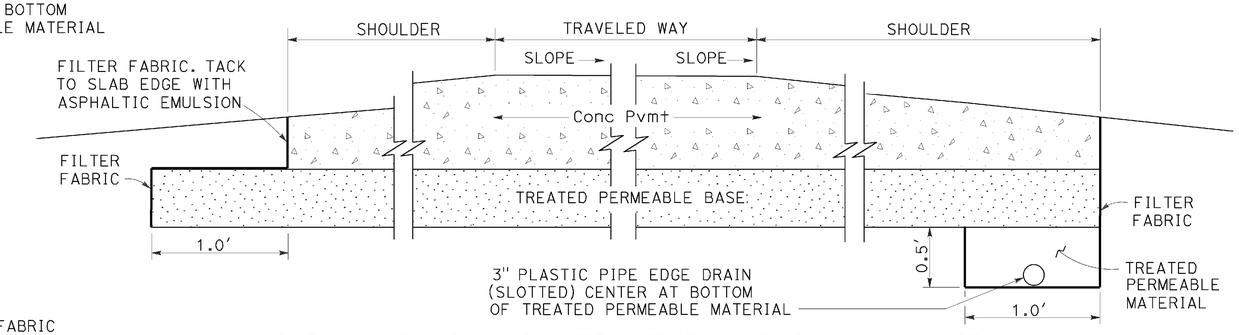

TYPE 6 PAVEMENT STRUCTURE DRAINAGE SYSTEM

(New construction)

NOTES:

1. At the Contractor's option, on new construction, the vertical jointline (including the filter fabric) between the treated permeable material and the shoulder base/subgrade material may be rotated about its midpoint to a slope not flatter than 1:1 as shown by the dashed lines.
2. See the project plans and typical cross sections for pavement structure details.
3. The plan layout for pavement structure drainage collector and outlet systems for new concrete pavement and new hot mix asphalt pavement is the same as that shown on Revised Standard Plan RSP D99B.
4. For plastic pipe edge drain diameter larger than 3", the minimum trench width shall be equal to the outside diameter of the plastic pipe plus 4".
5. For plastic pipe edge drain diameters larger than 3", all details for 3" plastic pipe edge drain shall apply.
6. For pavements thicker than 0.75′, the minimum trench depth is 1.0′.

STATE OF CALIFORNIA
DEPARTMENT OF TRANSPORTATION

PAVEMENT STRUCTURE DRAINAGE SYSTEM DETAILS

NO SCALE

RSP D99A DATED OCTOBER 30, 2015 SUPERSEDES STANDARD PLAN D99A DATED MAY 20, 2011 - PAGE 211 OF THE STANDARD PLANS BOOK DATED 2010.

REVISED STANDARD PLAN RSP D99A

DATE PLOTTED => 21-JUN-2016
TIME PLOTTED => 13:56

Dist	COUNTY	ROUTE	POST MILES TOTAL PROJECT	SHEET No.	TOTAL SHEETS
02	Sis	5	R57.8/R58.5	73	106

William K. Farnbach
REGISTERED CIVIL ENGINEER

October 30, 2015
PLANS APPROVAL DATE

REGISTERED PROFESSIONAL ENGINEER — William K. Farnbach — No. C49042 — Exp. 9-30-16 — CIVIL — STATE OF CALIFORNIA

THE STATE OF CALIFORNIA OR ITS OFFICERS OR AGENTS SHALL NOT BE RESPONSIBLE FOR THE ACCURACY OR COMPLETENESS OF SCANNED COPIES OF THIS PLAN SHEET.

TO ACCOMPANY PLANS DATED 06-15-16

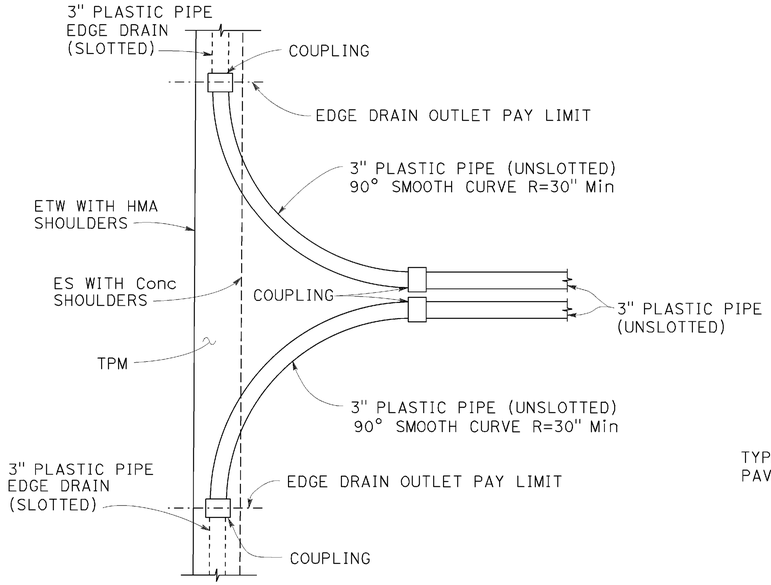

PLAN

DUAL OUTLET AND/OR VENT

See Note 2

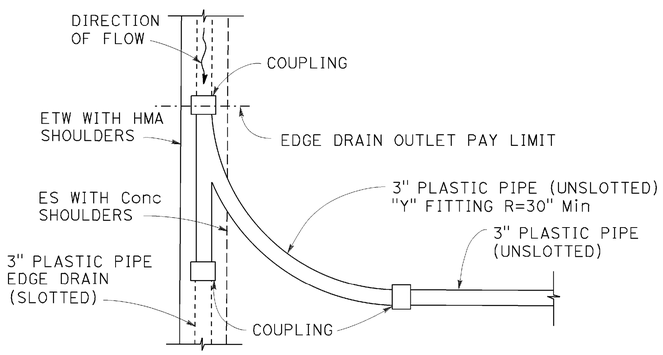

PLAN

INTERMEDIATE OUTLET

See Note 2

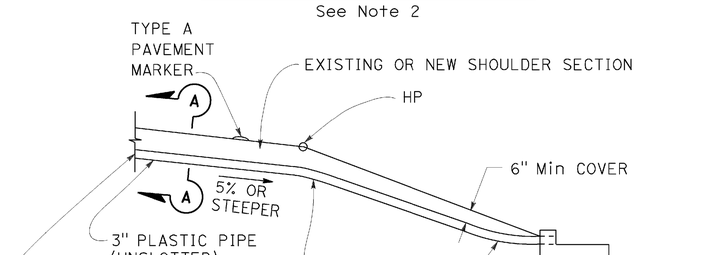

ELEVATION

TYPE A OUTLET

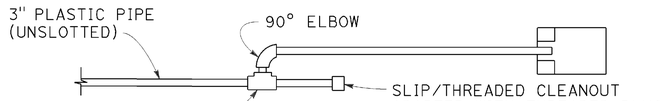

PLAN

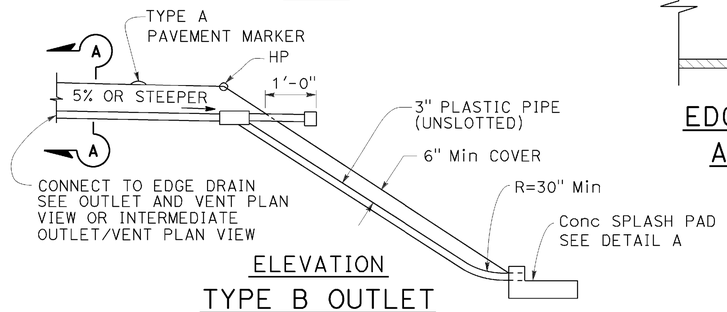

ELEVATION

TYPE B OUTLET

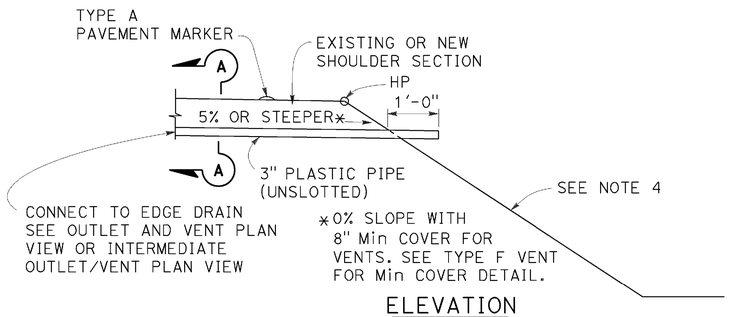

ELEVATION

TYPE C OUTLET AND/OR VENT

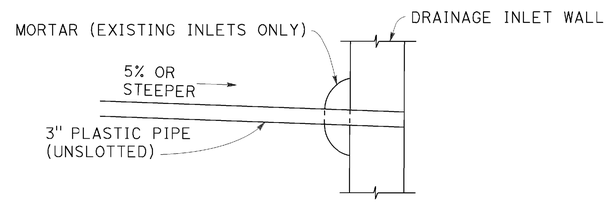

ELEVATION

TYPE D OUTLET CONNECTION TO DRAINAGE INLET

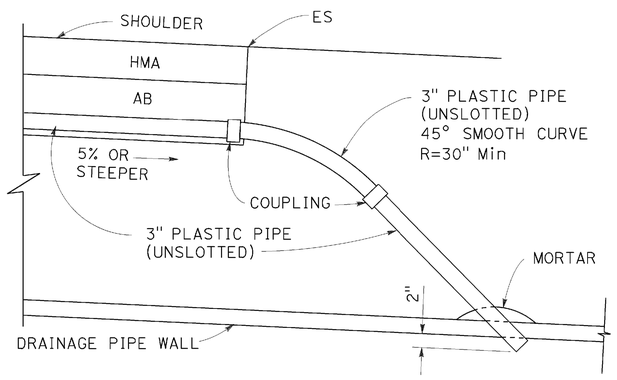

ELEVATION

TYPE E OUTLET CONNECTION TO DRAINAGE PIPE

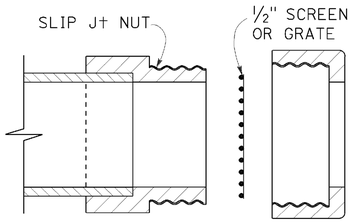

EDGE DRAIN OUTLET AND VENT COVER

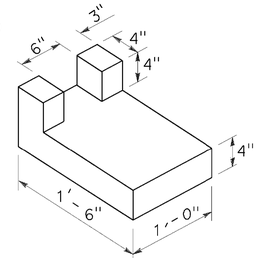

DETAIL A

CONCRETE SPLASH PAD

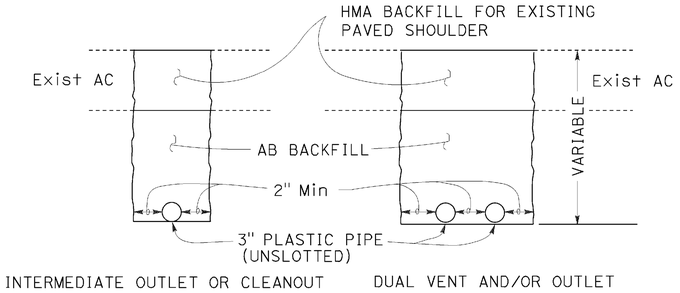

SECTION A-A

OUTLET EXCAVATION AND BACKFILL IN PAVED SHOULDERS

See Note 5

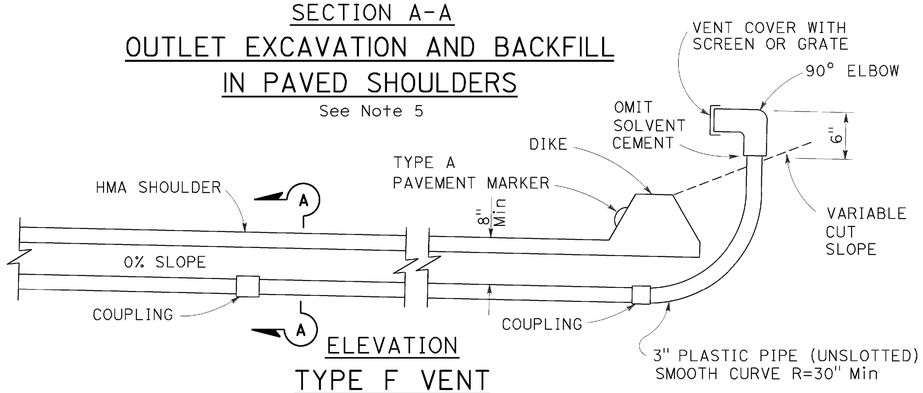

ELEVATION

TYPE F VENT

NOTES:

1. See project plans for location and type of outlet and/or vent installations.
2. The position of slotted plastic pipe and limits of treated permeable material shown are for the Type 1 pavement structure drainage system shown on Revised Standard Plan RSP D99A.
3. The maximum length of plastic pipe outlet shall be 50'-0" measured from the longitudinal centerline of the collector trench to the pipe outlet. For pipe lengths greater than 50'-0" use Type B outlets.
4. See project plans for slope protection details at Type C pipe outlets.
5. Backfill with aggregate base from outside edge paved shoulder to hinge point and backfill with native material in slope area.
6. See Revised Standard Plan RSP D99C for Type G vent detail used with concrete shoulders.

STATE OF CALIFORNIA
DEPARTMENT OF TRANSPORTATION

EDGE DRAIN OUTLET AND VENT DETAILS

NO SCALE

RSP D99B DATED OCTOBER 30, 2015 SUPERSEDES STANDARD PLAN D99B DATED MAY 20, 2011 - PAGE 212 OF THE STANDARD PLANS BOOK DATED 2010.

REVISED STANDARD PLAN RSP D99B

2010 REVISED STANDARD PLAN RSP D99B

DATE PLOTTED => 21-JUN-2016
TIME PLOTTED => 13:56

Dist	COUNTY	ROUTE	POST MILES TOTAL PROJECT	SHEET No.	TOTAL SHEETS
02	Sis	5	R57.8/R58.5	74	106

William K. Farnbach
REGISTERED CIVIL ENGINEER

October 30, 2015
PLANS APPROVAL DATE

REGISTERED PROFESSIONAL ENGINEER
William K. Farnbach
No. C49042
Exp. 9-30-16
CIVIL
STATE OF CALIFORNIA

THE STATE OF CALIFORNIA OR ITS OFFICERS OR AGENTS SHALL NOT BE RESPONSIBLE FOR THE ACCURACY OR COMPLETENESS OF SCANNED COPIES OF THIS PLAN SHEET.

TO ACCOMPANY PLANS DATED 06-15-16

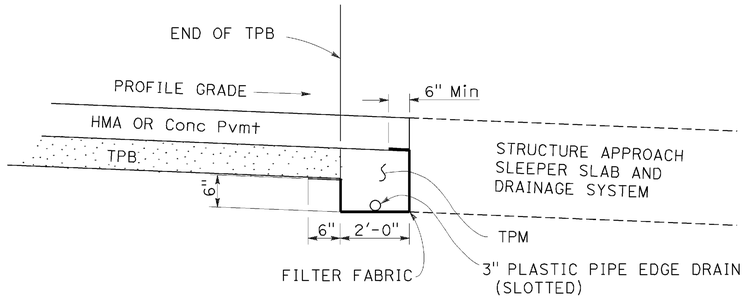

LONGITUDINAL SECTION
CROSS DRAIN INTERCEPTOR AT STRUCTURE APPROACH

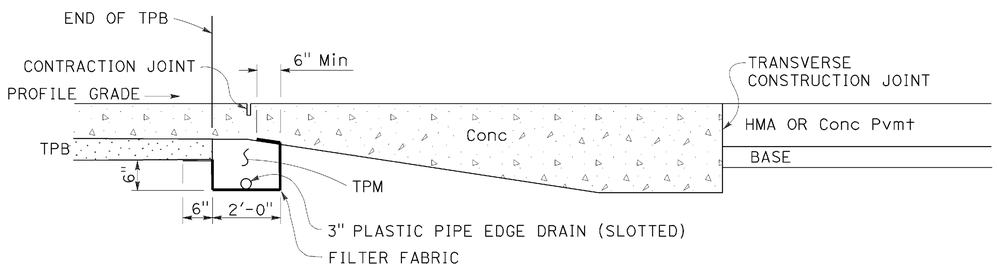

LONGITUDINAL SECTION
CROSS DRAIN INTERCEPTOR AT END ANCHOR
See Note 2

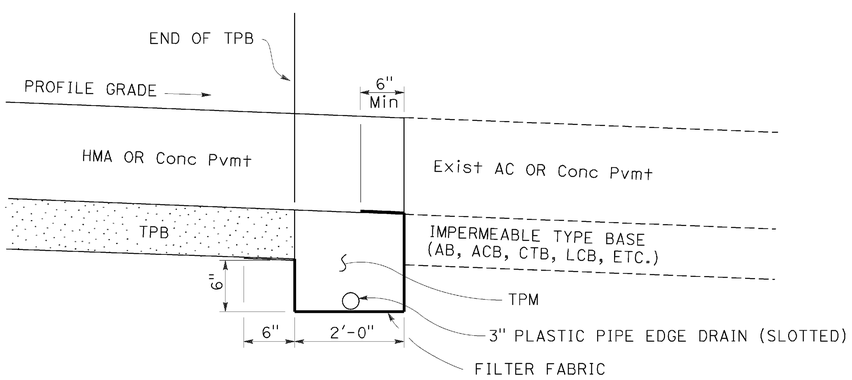

LONGITUDINAL SECTION
TERMINAL CROSS DRAIN INTERCEPTOR

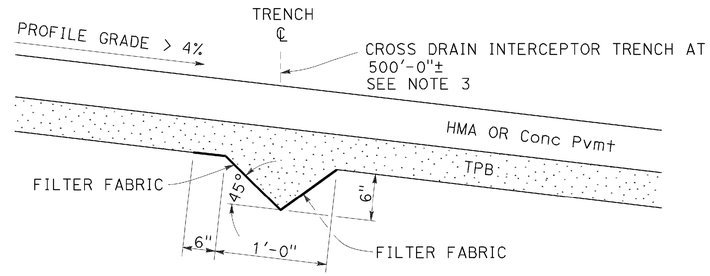

LONGITUDINAL SECTION
INTERMEDIATE CROSS DRAIN INTERCEPTOR

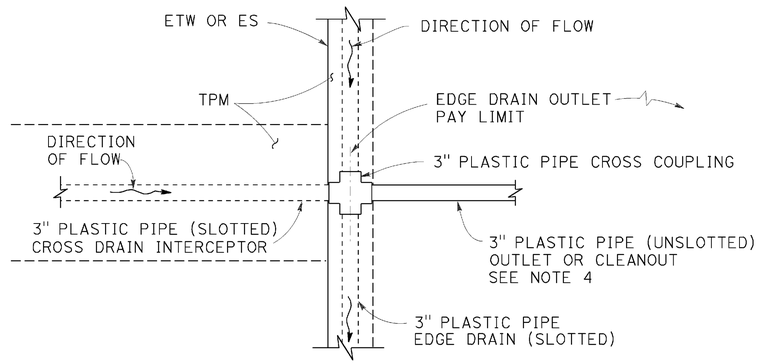

PLAN
CROSS DRAIN INTERCEPTOR OUTLET CONNECTION DETAILS

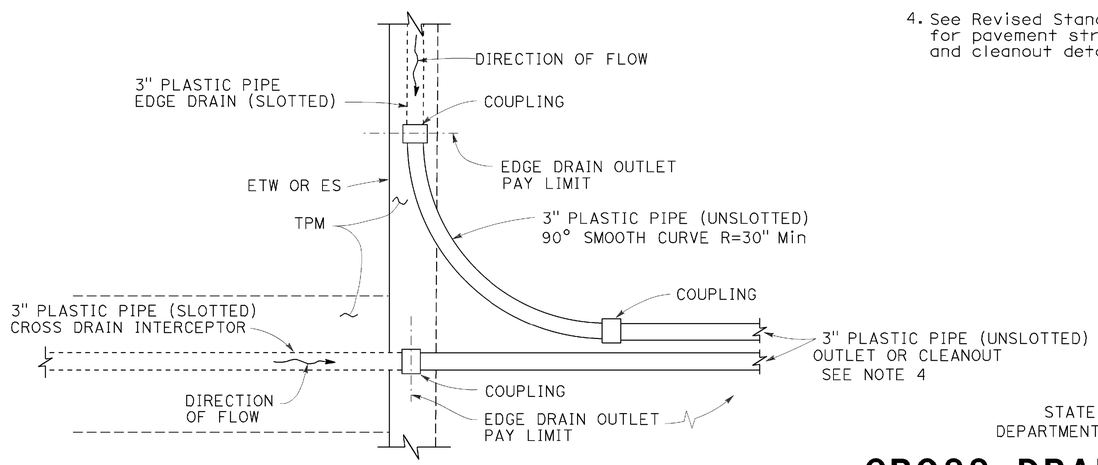

PLAN
COMBINED CROSS DRAIN INTERCEPTOR/EDGE DRAIN OUTLET DETAILS

NOTES:

1. Cross drain interceptors are for use with treated permeable bases.
2. See Revised Standard Plan RSP P30 for Pavement End Anchor details. A typical pavement end anchor is shown.
3. The cross drain interceptor trench shall slope to drain. See project plans for location and skew of cross drains.
4. See Revised Standard Plans RSP D99B and RSP D99C for pavement structure drainage system outlet and cleanout details, respectively.

STATE OF CALIFORNIA
DEPARTMENT OF TRANSPORTATION

CROSS DRAIN INTERCEPTOR DETAILS

NO SCALE

RSP D99D DATED OCTOBER 30, 2015 SUPERSEDES STANDARD PLAN D99D
DATED MAY 20, 2011 - PAGE 214 OF THE STANDARD PLANS BOOK DATED 2010

REVISED STANDARD PLAN RSP D99D

2010 REVISED STANDARD PLAN RSP D99D

DATE PLOTTED => 21-JUN-2016
TIME PLOTTED => 13:56

Dist	COUNTY	ROUTE	POST MILES TOTAL PROJECT	SHEET No.	TOTAL SHEETS
02	Sis	5	R57.8/R58.5	75	106

REGISTERED CIVIL ENGINEER

July 19, 2013
PLANS APPROVAL DATE

REGISTERED PROFESSIONAL ENGINEER Gurinderpal Bhullar No. C48815 Exp. 9-30-14 CIVIL STATE OF CALIFORNIA

THE STATE OF CALIFORNIA OR ITS OFFICERS OR AGENTS SHALL NOT BE RESPONSIBLE FOR THE ACCURACY OR COMPLETENESS OF SCANNED COPIES OF THIS PLAN SHEET.

TO ACCOMPANY PLANS DATED 06-15-16

TABLE 1

TAPER LENGTH CRITERIA AND CHANNELIZING DEVICE SPACING

SPEED (S)	MINIMUM TAPER LENGTH * FOR WIDTH OF OFFSET 12 FEET (W)				MAXIMUM CHANNELIZING DEVICE SPACING		
					X	Y	Z **
	TANGENT 2L	MERGING L	SHIFTING L/2	SHOULDER L/3	TAPER	TANGENT	CONFLICT
mph	ft	ft	ft	ft	ft	ft	ft
20	160	80	40	27	20	40	10
25	250	125	63	42	25	50	12
30	360	180	90	60	30	60	15
35	490	245	123	82	35	70	17
40	640	320	160	107	40	80	20
45	1080	540	270	180	45	90	22
50	1200	600	300	200	50	100	25
55	1320	660	330	220	55	110	27
60	1440	720	360	240	60	120	30
65	1560	780	390	260	65	130	32
70	1680	840	420	280	70	140	35

* - For other offsets, use the following merging taper length formula for L:
For speed of 40 mph or less, $L = WS^2/60$
For speed of 45 mph or more, $L = WS$

Where: L = Taper length in feet
W = Width of offset in feet
S = Posted speed limit, off-peak 85th-percentile speed prior to work starting, or the anticipated operating speed in mph

** - Use for taper and tangent sections where there are no pavement markings or where there is a conflict between existing pavement markings and channelizers (CA).

TABLE 2

LONGITUDINAL BUFFER SPACE AND FLAGGER STATION SPACING

SPEED *	Min D **	DOWNGRADE Min D ***		
		-3%	-6%	-9%
mph	ft	ft	ft	ft
20	115	116	120	126
25	155	158	165	173
30	200	205	215	227
35	250	257	271	287
40	305	315	333	354
45	360	378	400	427
50	425	446	474	507
55	495	520	553	593
60	570	598	638	686
65	645	682	728	785
70	730	771	825	891

* - Speed is posted speed limit, off-peak 85th-percentile speed prior to work starting, or the anticipated operating speed in mph

** - Longitudinal buffer space or flagger station spacing

*** - Use on sustained downgrade steeper than -3 percent and longer than 1 mile.

TABLE 3

ADVANCE WARNING SIGN SPACING

ROAD TYPE	DISTANCE BETWEEN SIGNS *		
	A	B	C
	ft	ft	ft
URBAN - 25 mph OR LESS	100	100	100
URBAN - MORE THAN 25 mph TO 40 mph	250	250	250
URBAN - MORE THAN 40 mph	350	350	350
RURAL	500	500	500
EXPRESSWAY / FREEWAY	1000	1500	2640

* - The distances are approximate, are intended for guidance purposes only, and should be applied with engineering judgment. These distances should be adjusted by the Engineer for field conditions, if necessary, by increasing or decreasing the recommmended distances.

STATE OF CALIFORNIA
DEPARTMENT OF TRANSPORTATION

TRAFFIC CONTROL SYSTEM TABLES FOR LANE AND RAMP CLOSURES

NO SCALE

RSP T9 DATED JULY 19, 2013 SUPERSEDES RSP T9 DATED APRIL 19, 2013 THAT SUPPLEMENTS THE STANDARD PLANS BOOK DATED 2010.

REVISED STANDARD PLAN RSP T9

2010 REVISED STANDARD PLAN RSP T9

DATE PLOTTED => 21-JUN-2016
TIME PLOTTED => 13:57

Dist	COUNTY	ROUTE	POST MILES TOTAL PROJECT	SHEET No.	TOTAL SHEETS
02	Sis	5	R57.8/R58.5	76	106

REGISTERED CIVIL ENGINEER

April 19, 2013
PLANS APPROVAL DATE

REGISTERED PROFESSIONAL ENGINEER Gurinderpal Bhullar No. C48815 Exp. 9-30-14 CIVIL STATE OF CALIFORNIA

THE STATE OF CALIFORNIA OR ITS OFFICERS OR AGENTS SHALL NOT BE RESPONSIBLE FOR THE ACCURACY OR COMPLETENESS OF SCANNED COPIES OF THIS PLAN SHEET.

TO ACCOMPANY PLANS DATED _____

NOTES:

See Revised Standard Plan RSP T9 for tables.

Use cone spacing X for taper segment, Y for tangent segment or Z for conflict situations, as approriate, per Table 1, unless X, Y, or Z cone spacing is shown on this sheet.

Unless otherwise specified in the special provisions, all temporary warning signs shall have black legend on fluorescent orange background.

California codes are designated by (CA). Otherwise, Federal (MUTCD) codes are shown.

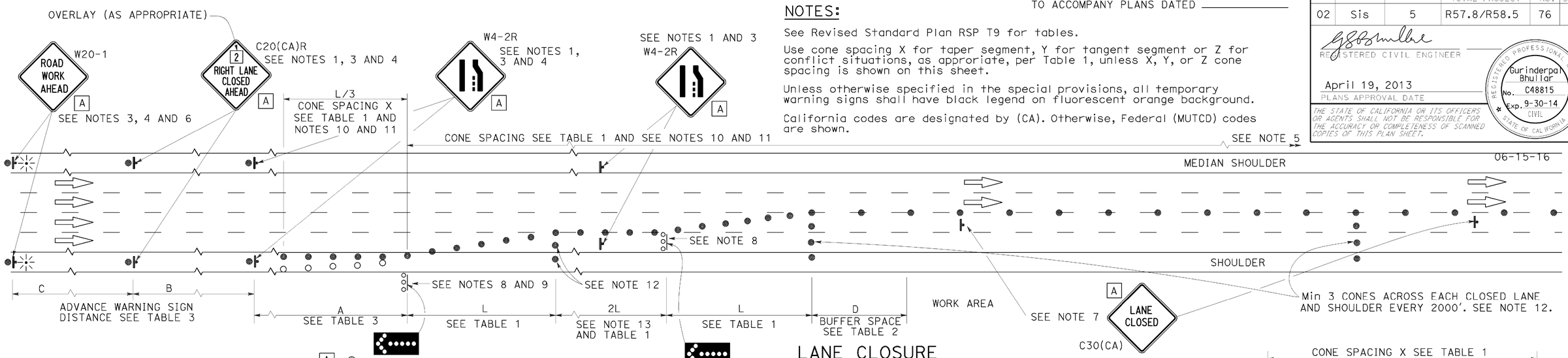

LANE CLOSURE

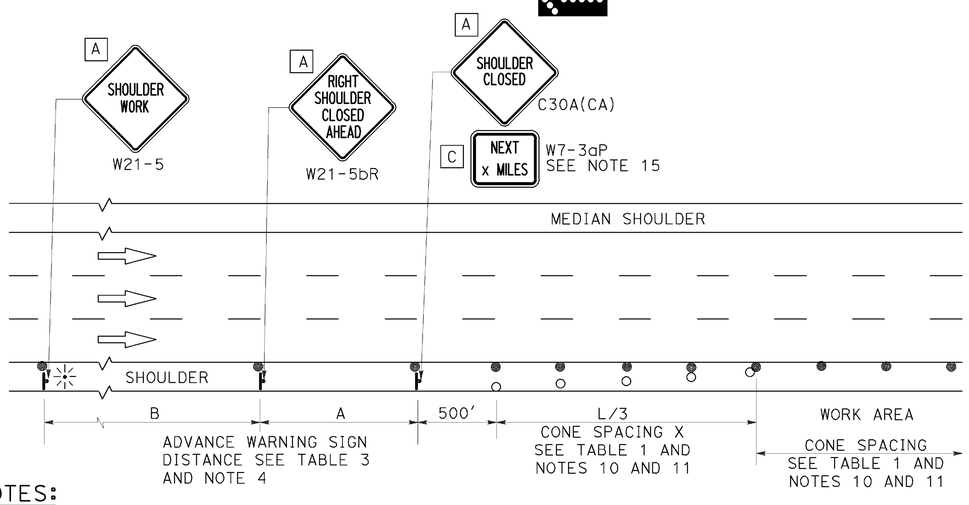

SHOULDER CLOSURE

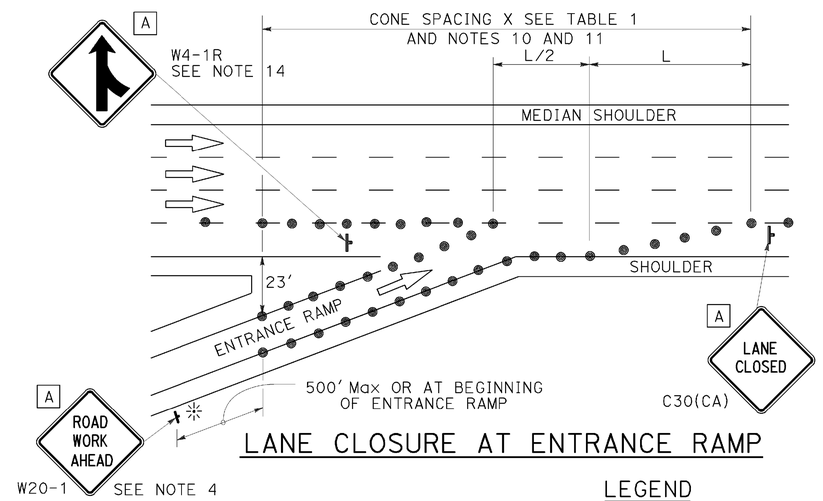

LANE CLOSURE AT ENTRANCE RAMP

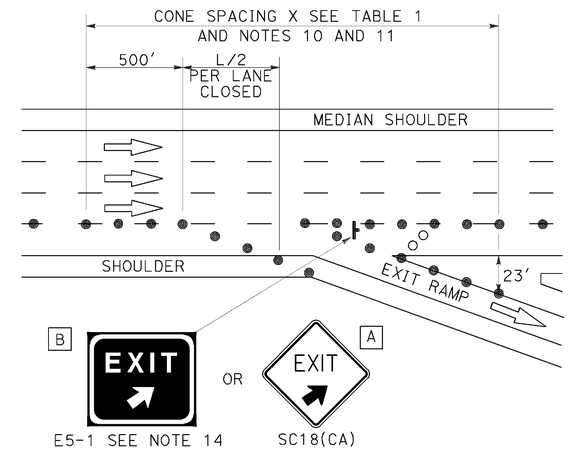

LANE CLOSURE AT EXIT RAMP

NOTES:

1. Median lane closures shall conform to the details as shown except that C20(CA)L and W4-2L signs shall be used.
2. At least one person shall be assigned to provide full time maintenance of traffic control devices for lane closures.
3. Duplicate sign installations are not required:
   a) On opposite shoulder if at least one-half of the available lanes remain open to traffic.
   b) In the median if the width of the median shoulder is less than 8' and the outside lanes are to be closed.
4. Each advance warning sign on each side of the roadway shall be equipped with at least two flags for daytime closure. Each flag shall be at least 16" x 16" in size and shall be orange or fluorescent red-orange in color. Flashing beacons shall be placed at the locations indicated for lane closure during hours of darkness.
5. A G20-2 "END ROAD WORK" sign, with minimum size of 48" x 24" as appropriate, shall be placed at the end of the lane closure unless the end of work area is obvious or ends within a larger project's limits.
6. If the W20-1 sign would follow within 2000' of a stationary W20-1 or G20-1 "ROAD WORK NEXT _____ MILES", use a C20(CA) sign for the first advance warning sign.
7. Place a C30(CA) sign every 2000' throughout length of lane closure.
8. One flashing arrow sign for each lane closed. The flashing arrow signs shall be Type I.
9. A minimum 1500' of sight distance shall be provided where possible for vehicles approaching the first flashing arrow sign. Lane closures shall not begin at top of crest vertical curve or on a horizontal curve.
10. All cones used for lane closures during the hours of darkness shall be fitted with retroreflective bands (or sleeves) as specified in the specifications.
11. Portable delineators, placed at one-half the spacing indicated for traffic cones may be used instead of cones for daytime closures only.
12. Unless otherwise specified in the special provisions, a minimum of 3 cones shall be placed transversely across each closed lane and shoulder at each location where a taper across a traffic lane ends and every 2000' as shown on the "Lane Closure" detail. Two Type II barricades may be used instead of the 3 cones. The transverse alignment of the cones or barricades on the closed shoulder may be shifted from the transverse alignment to provide access to the work.
13. Unless otherwise specified in the special provisions, the 2L tangent shown along lane lines shall be used between the L tapers required for each closed traffic lane.
14. Unless otherwise specified in the special provisions, the E5-1 or SC18(CA) and W4-1 signs shall be used as shown.
15. A W7-3aP "NEXT____MILES" plaque must be used if theshoulder closure extends beyond the distance that can be perceived by road users.

LEGEND

- TRAFFIC CONE
- TRAFFIC CONE (OPTIONAL TAPER)
- TEMPORARY TRAFFIC CONTROL SIGN
- FLASHING ARROW SIGN (FAS)
- FAS SUPPORT OR TRAILER
- PORTABLE FLASHING BEACON

SIGN PANEL SIZE (Min)

A	48" x 48"
B	72" x 60"
C	36" x 30"

STATE OF CALIFORNIA
DEPARTMENT OF TRANSPORTATION

TRAFFIC CONTROL SYSTEM FOR LANE CLOSURE ON FREEWAYS AND EXPRESSWAYS

NO SCALE

RSP T10 DATED APRIL 19, 2013 SUPERSEDES STANDARD PLAN T10 DATED MAY 20, 2011 - PAGE 237 OF THE STANDARD PLANS BOOK DATED 2010.

REVISED STANDARD PLAN RSP T10

2010 REVISED STANDARD PLAN RSP T10

DATE PLOTTED => 21-JUN-2016
TIME PLOTTED => 13:57

TO ACCOMPANY PLANS DATED _____

Dist	COUNTY	ROUTE	POST MILES TOTAL PROJECT	SHEET No.	TOTAL SHEETS
02	Sis	5	R57.8/R58.5	77	106

REGISTERED CIVIL ENGINEER

April 19, 2013
PLANS APPROVAL DATE

REGISTERED PROFESSIONAL ENGINEER Gurinderpal Bhullar No. C48815 Exp. 9-30-14 CIVIL STATE OF CALIFORNIA

THE STATE OF CALIFORNIA OR ITS OFFICERS OR AGENTS SHALL NOT BE RESPONSIBLE FOR THE ACCURACY OR COMPLETENESS OF SCANNED COPIES OF THIS PLAN SHEET.

06-15-16

NOTES: See Revised Standard Plan RSP T9 for tables.

Use cone spacing X for taper segment, Y for tangent segment or Z for conflict situations, as approriate, per Table 1, unless X, Y, or Z cone spacing is shown on this sheet.

Unless otherwise specified in the special provisions, all temporary warning signs shall have black legend on fluorescent orange background.

California codes are designated by (CA). Otherwise, Federal (MUTCD) codes are shown.

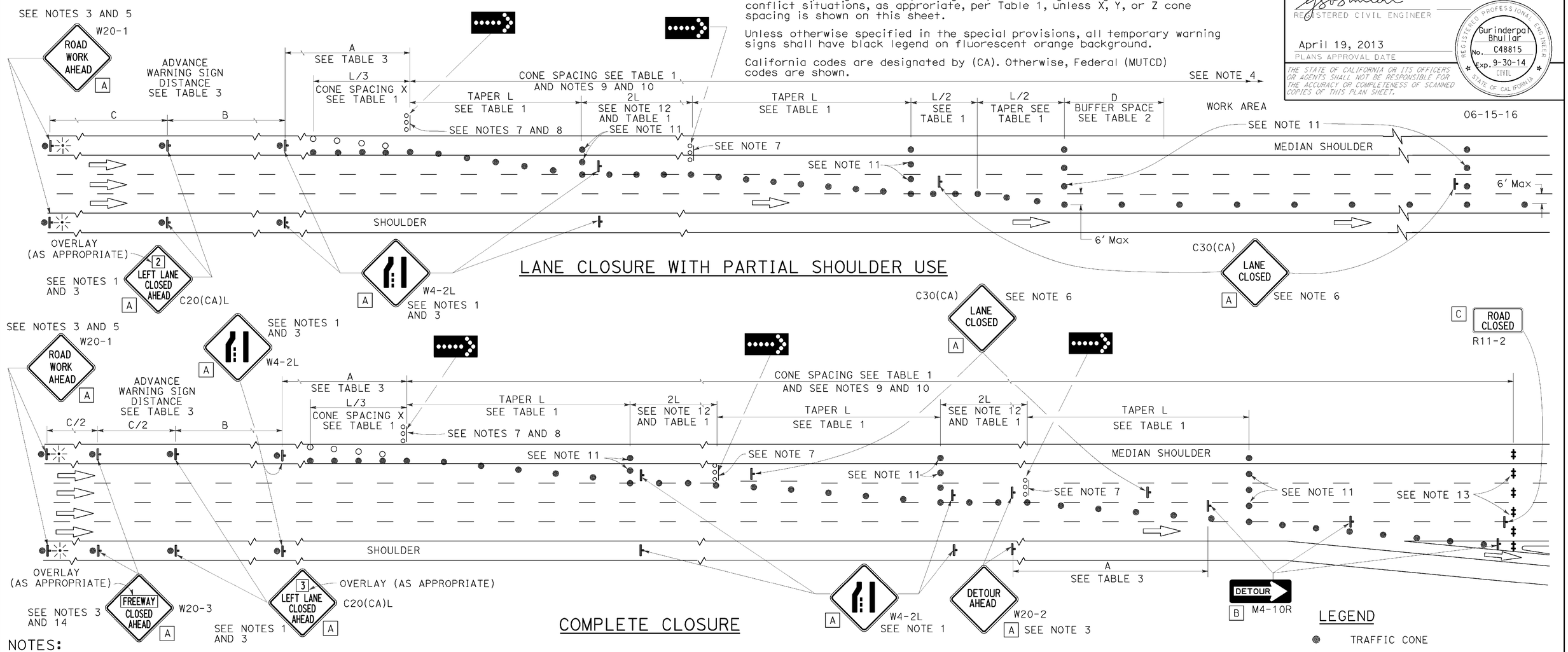

LANE CLOSURE WITH PARTIAL SHOULDER USE

COMPLETE CLOSURE

NOTES:

1. Lane closures on the right side using partial median shoulder as a traffic lane shall conform to the details as shown except that C20(CA)R and W4-2R signs shall be used.
2. At least one person shall be assigned to provide full time maintenance of traffic control devices for lane closures.
3. Each advance warning sign on each side of the roadway shall be equipped with at least two flags for daytime closure. Each flag shall be at least 16" X 16" in size and shall be orange or fluorescent red-orange in color. Flashing beacons shall be placed at the locations indicated for lane closure during hours of darkness.
4. A G20-2 "END ROAD WORK" sign, with minimum size of 48" x 24" as appropriate, shall be placed at the end of the lane closure unless the end of work area is obvious or ends within a larger project's limits.
5. If the W20-1 sign would follow within 2000' of a stationary W20-1 or G20-1 "ROAD WORK NEXT ___ MILES", use a C20(CA) sign for the first advance warning sign.
6. Place a C30(CA) sign every 2000' throughout length of lane closure.
7. One flashing arrow sign for each lane closed. The flashing arrow signs shall be Type I.
8. A minimum 1500' of sight distance shall be provided where possible for vehicles approaching the first flashing arrow sign. Lane closures shall not begin at the top of crest vertical curve or on a horizontal curve.
9. All cones used for lane closures during the hours of darkness shall be fitted with retroreflective bands (or sleeves) as specified in the specifications.
10. Portable delineators, placed at one-half the spacing indicated for traffic cones, may be used instead of cones for daytime closures only.
11. Unless otherwise specified in the special provisions, a minimum of 3 cones shall be placed transversely across each closed lane and shoulder at each location where a taper across a traffic lane ends and every 2000' as shown on the "Lane Closure With Partial Shoulder Use" detail. Two Type II barricades may be used instead of the 3 cones. The transverse alignment of the cones or barricades on the closed shoulder may be shifted from the transverse alignment to provide access to the work.
12. Unless otherwise specified in the special provisions, the 2L tangent shown along lane lines shall be used between the L tapers required for each closed traffic lane.
13. A minimum of Two Type II or III barricades shall be placed across each closed lane and shoulder at the location shown and every 2000' within the complete closure area. Within the complete closure area, the transverse alignment of the barricades on the closed shoulder may be shifted from the transverse alignment to provide access to the work.
14. When specified in the special provisions, a W20-2 "DETOUR AHEAD" sign is to be used in place of the W20-3 "FREEWAY CLOSED AHEAD" sign.

SIGN PANEL SIZE (Min)

A	48" x 48"
B	48" x 18"
C	48" x 30"

LEGEND

- TRAFFIC CONE
- TRAFFIC CONE (OPTIONAL TAPER)
- TEMPORARY TRAFFIC CONTROL SIGN
- FLASHING ARROW SIGN (FAS)
- FAS SUPPORT OR TRAILER
- PORTABLE FLASHING BEACON

STATE OF CALIFORNIA
DEPARTMENT OF TRANSPORTATION

TRAFFIC CONTROL SYSTEM FOR LANE CLOSURES ON FREEWAYS AND EXPRESSWAYS

NO SCALE

RSP T10A DATED APRIL 19, 2013 SUPERSEDES STANDARD PLAN T10A DATED MAY 20, 2011 - PAGE 238 OF THE STANDARD PLANS BOOK DATED 2010.

REVISED STANDARD PLAN RSP T10A

2010 REVISED STANDARD PLAN RSP T10A

DATE PLOTTED => 21-JUN-2016
TIME PLOTTED => 13:57

Dist	COUNTY	ROUTE	POST MILES TOTAL PROJECT	SHEET No.	TOTAL SHEETS
02	Sis	5	R57.8/R58.5	78	106

Devinder Singh
REGISTERED CIVIL ENGINEER

October 30, 2015
PLANS APPROVAL DATE

REGISTERED PROFESSIONAL ENGINEER
Devinder Singh
No. C50470
Exp. 6-30-17
CIVIL
STATE OF CALIFORNIA

THE STATE OF CALIFORNIA OR ITS OFFICERS OR AGENTS SHALL NOT BE RESPONSIBLE FOR THE ACCURACY OR COMPLETENESS OF SCANNED COPIES OF THIS PLAN SHEET.

TO ACCOMPANY PLANS DATED 06-15-16

NOTES:

See Revised Standard Plan RSP T9 for tables.

Use cone spacing X for taper segment, Y for tangent segment or Z for conflict situations, as approriate, per Table 1, unless X, Y, or Z cone spacing is shown on this sheet.

Unless otherwise specified in the special provisions, all temporary warning signs shall have black legend on fluorescent orange background.

California codes are designated by (CA). Otherwise, Federal (MUTCD) codes are shown.

TYPICAL LANE CLOSURE WITH REVERSIBLE CONTROL

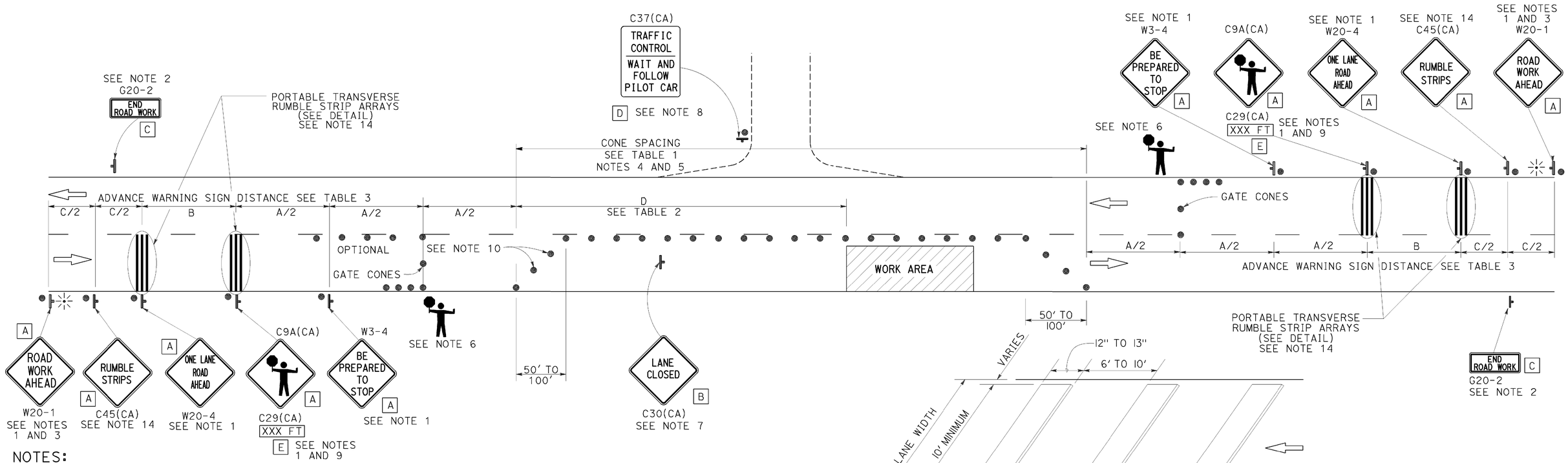

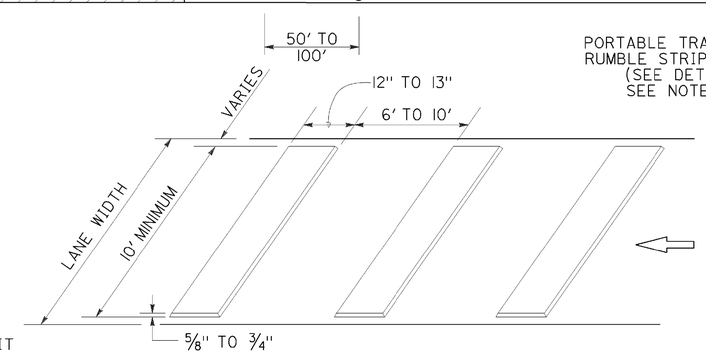

PORTABLE TRANSVERSE RUMBLE STRIP ARRAY DETAIL

NOTES:

1. Each advance warning sign in each direction of travel shall be equipped with at least two flags for daytime closure. Each flag shall be at least 16" x 16" in size and shall be orange or fluorescent red-orange in color. Flashing beacons shall be placed at the locations indicated for lane closure during hours of darkness.
2. A G20-2 "END ROAD WORK" sign, as appropriate, shall be placed at the end of the lane control unless the end of work area is obvious, or ends within a larger project's limits.
3. If the W20-1 sign would follow within 2000' of a stationary W20-1 or G20-1 "ROAD WORK NEXT _____ MILES", use a W20-4 sign for the first advance warning sign.
4. All cones used for lane closures during the hours of darkness shall be fitted with retroreflective bands (or sleeves) as specified in the specifications.
5. Portable delineators, placed at one-half the spacing indicated for traffic cones, may be used instead of cones for daytime closures only.
6. Additional advance flaggers may be required. Flagger should stand in a conspicuous place, be visible to approaching traffic as well as approaching vehicles after the first vehicle has stopped. During the hours of darkness, the flagging-station and flagger shall be illuminated and clearly visible to approaching traffic. The illumination footprint of the lighting on the ground shall be at least 20' in diameter. Place a minimum of four cones at 50' intervals in advance of flagger station as shown.
7. Place C30(CA) "LANE CLOSED" sign at 500' to 1000' intervals throughout extended work areas. They are optional if the work area is visible from the flagger station.
8. When a pilot car is used, place a C37(CA) "TRAFFIC CONTROL-WAIT AND FOLLOW PILOT CAR" sign with black legend on white background at all intersections, driveways and alleys without a flagger within traffic control area. Signs shall be clean and visible at all times. Where traffic can not be effectively self-regulated, at least one flagger shall be used at each intersection within traffic control area.
9. An optional C29(CA) sign may be placed below the C9A(CA) sign.
10. Either traffic cones or barricades shall be placed on the taper. Barricades shall be Type I, II, or III.
11. The color of the portable transverse rumble strips shall be black or orange. Use 2 arrays, each array shall consist of 3 rumble strips.
12. Portable transverse rumble strips shall not be placed on sharp horizontal or vertical curves nor shall they be placed through pedestrian crossings.
13. If the portable transverse rumble strips become out of alignment (skewed) by more than 6 inches, measured from one end to the other, they shall be readjusted to bring the placement back to the original location.
14. Portable transverse rumble strips are not required if any one of the following conditions is satisfied:
    A. Work duration occupies a location for four hours or less
    B. Posted speed limit is below 45 MPH
    C. Work is of emergency nature
    D. Work zone is in snow or icy weather conditions

SIGN PANEL SIZE (Min)

A	48" x 48"
B	30" x 30"
C	36" x 18"
D	36" x 42"
E	20" x 7"

LEGEND

- TRAFFIC CONE
- TEMPORARY TRAFFIC CONTROL SIGN
- PORTABLE FLASHING BEACON
- FLAGGER

STATE OF CALIFORNIA
DEPARTMENT OF TRANSPORTATION

TRAFFIC CONTROL SYSTEM FOR LANE CLOSURE ON TWO LANE CONVENTIONAL HIGHWAYS

NO SCALE

RSP T13 DATED OCTOBER 30, 2015 SUPERSEDES RSP T13 DATED OCTOBER 17, 2014, RSP T13 DATED JULY 18, 2014 AND RSP T13 DATED APRIL 19, 2013 AND STANDARD PLAN T13 DATED MAY 20, 2011 - PAGE 241 OF THE STANDARD PLANS BOOK DATED 2010.

REVISED STANDARD PLAN RSP T13

2010 REVISED STANDARD PLAN RSP T13

DATE PLOTTED => 21-JUN-2016
TIME PLOTTED => 13:57

Dist	COUNTY	ROUTE	POST MILES TOTAL PROJECT	SHEET No.	TOTAL SHEETS
02	Sis	5	R57.8/R58.5	79	106

REGISTERED CIVIL ENGINEER

April 19, 2013
PLANS APPROVAL DATE

REGISTERED PROFESSIONAL ENGINEER Gurinderpal Bhullar No. C48815 Exp. 9-30-14 CIVIL STATE OF CALIFORNIA

THE STATE OF CALIFORNIA OR ITS OFFICERS OR AGENTS SHALL NOT BE RESPONSIBLE FOR THE ACCURACY OR COMPLETENESS OF SCANNED COPIES OF THIS PLAN SHEET.

TO ACCOMPANY PLANS DATED 06-15-16

TYPICAL RAMP CLOSURES

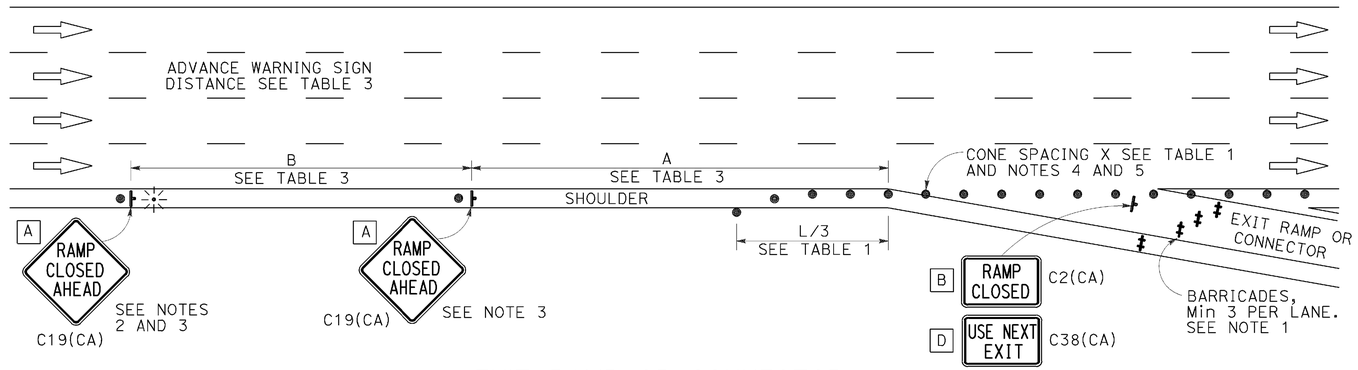

EXIT RAMP OR CONNECTOR

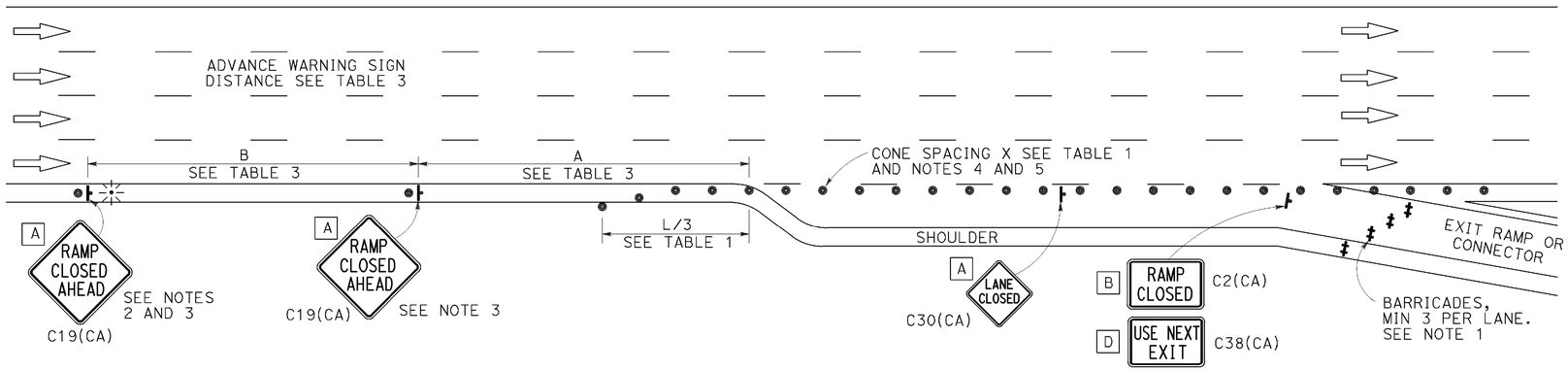

EXIT RAMP OR CONNECTOR WITH ADDITIONAL LANE

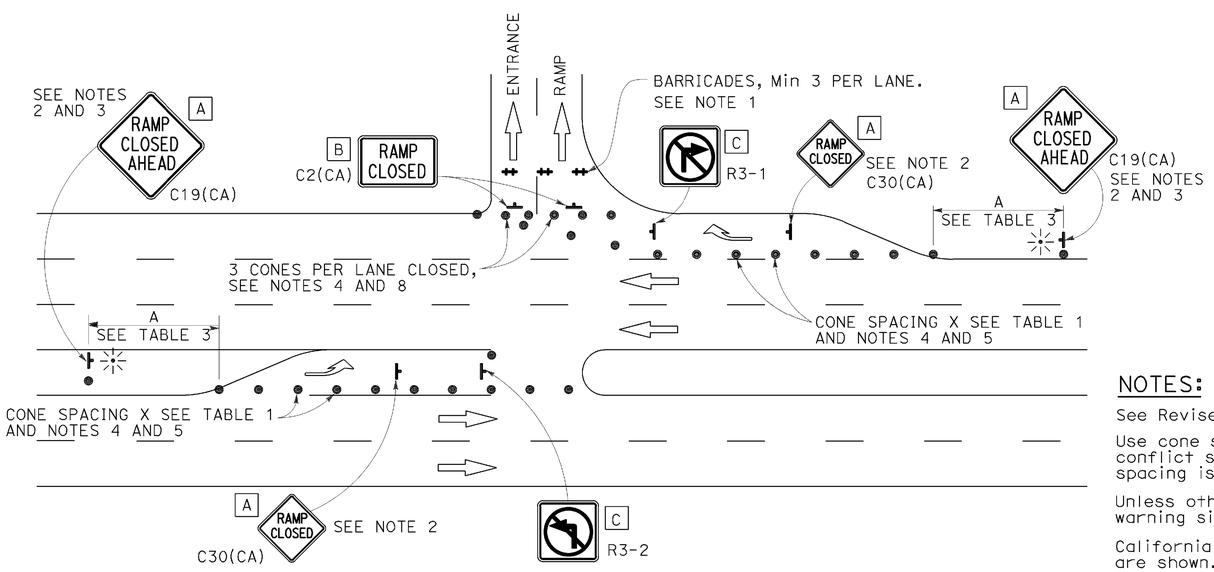

ENTRANCE RAMP WITH TURNING POCKETS

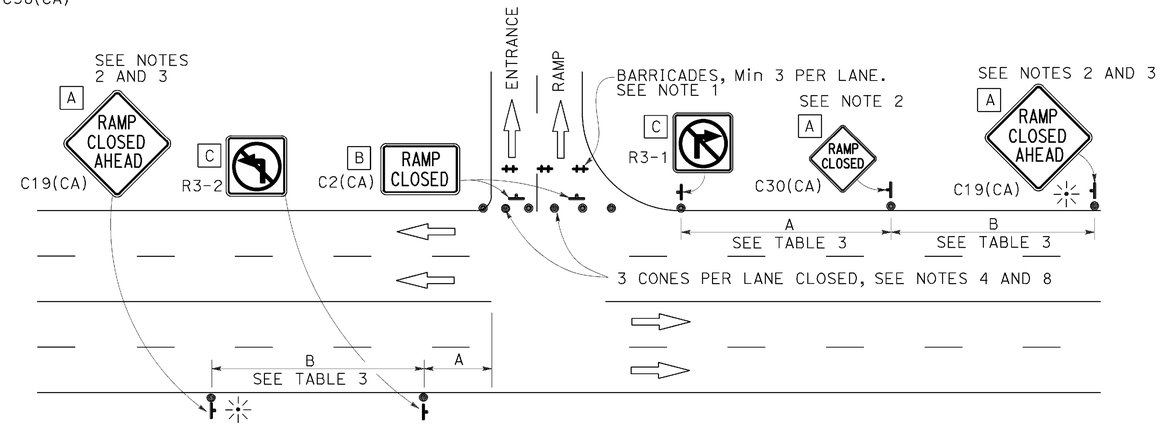

ENTRANCE RAMP WITHOUT TURNING POCKETS

SIGN PANEL SIZE (Min)

- A 48" × 48"
- B 48" × 30"
- C 36" × 36"
- D 48" × 36"

LEGEND

- TRAFFIC CONE
- TEMPORARY TRAFFIC CONTROL SIGN
- BARRICADES
- PORTABLE FLASHING BEACON

NOTES:

1. Barricades shall be Type I, II, or III for closures lasting one week or less and Type III for closures lasting longer than one week.
2. In addition to placing the C19(CA) "RAMP CLOSED AHEAD" and C30(CA) "RAMP CLOSED" signs, black on orange overlay plates with the word "CLOSED" may be mounted, as directed by the Engineer, on all guide signs that refer to the closed ramp. The letter size on the overlay shall be the same as the guide sign.
3. Each advance C19(CA) "RAMP CLOSED AHEAD" sign shall be equipped with at least two flags for daytime closure. Each flag shall be at least 16" × 16" in size and shall be orange or fluorescent red-orange in color. A flashing beacon shall be placed on top of the first C19(CA) sign during hours of darkness.
4. All cones used for ramp closures during the hours of darkness shall be fitted with retroreflective bands (or sleeves) as specified in the specifications.
5. Portable delineators, placed at one-half the spacing indicated for traffic cones, may be used instead of cones for daytime ramp closures only.
6. At least one person shall be assigned to provide full time maintenance of traffic control devices, unless otherwise directed by the Engineer.
7. The existing "EXIT" signs shall be covered during ramp closures.
8. A minimum of 3 cones shall be placed transversely across each closed lane and shoulder.

NOTES:

See Revised Standard Plan RSP T9 for tables.

Use cone spacing X for taper segment, Y for tangent segment or Z for conflict situations, as approriate, per Table 1, unless X, Y, or Z cone spacing is shown on this sheet.

Unless otherwise specified in the special provisions, all temporary warning signs shall have black legend on fluorescent orange background.

California codes are designated by (CA). Otherwise, Federal (MUTCD) codes are shown.

STATE OF CALIFORNIA
DEPARTMENT OF TRANSPORTATION

TRAFFIC CONTROL SYSTEM FOR RAMP CLOSURE

NO SCALE

RSP T14 DATED APRIL 19, 2013 SUPERSEDES STANDARD PLAN T14
DATED MAY 20, 2011 - PAGE 242 OF THE STANDARD PLANS BOOK DATED 2010.

REVISED STANDARD PLAN RSP T14

2010 REVISED STANDARD PLAN RSP T14

DATE PLOTTED => 21-JUN-2016
TIME PLOTTED => 13:57

Dist	COUNTY	ROUTE	POST MILES TOTAL PROJECT	SHEET No.	TOTAL SHEETS
02	Sis	5	R57.8/R58.5	80	106

REGISTERED CIVIL ENGINEER

October 30, 2015
PLANS APPROVAL DATE

REGISTERED PROFESSIONAL ENGINEER Efthymios Delis No. C51434 Exp. 6-30-17 CIVIL STATE OF CALIFORNIA

THE STATE OF CALIFORNIA OR ITS OFFICERS OR AGENTS SHALL NOT BE RESPONSIBLE FOR THE ACCURACY OR COMPLETENESS OF SCANNED COPIES OF THIS PLAN SHEET.

TO ACCOMPANY PLANS DATED 06-15-16

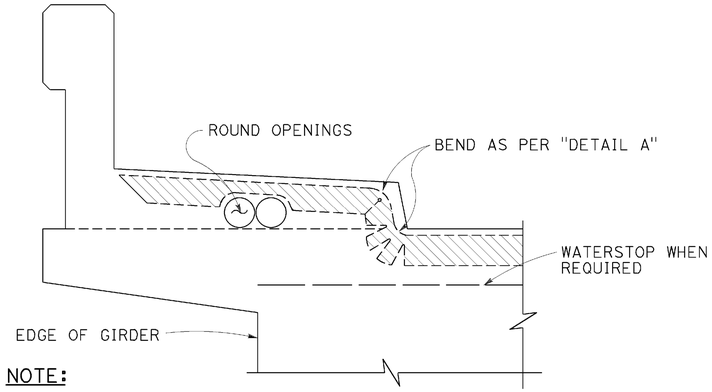

NOTE:
Type "B" seal shown. Type "A" seals to comform to the general path of seal shown, cuts for bending not required. Bend type "A" seals 3" up into curb or barrier rail on only the low end of the seal.

CONCRETE BARRIER AND SIDEWALK

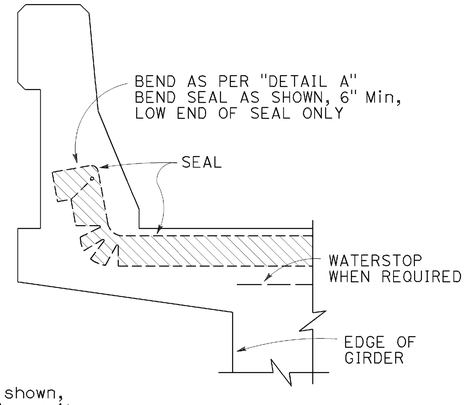

CONCRETE BARRIER

JOINT SEALS DETAILS

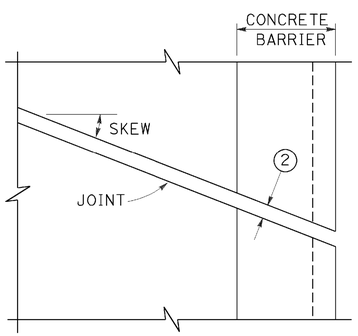

PLAN OF JOINT (SKEW ≤ 20°)

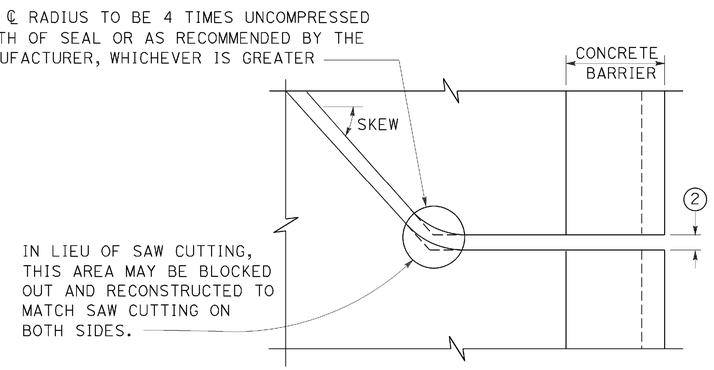

PLAN OF JOINT (SKEW > 20°)

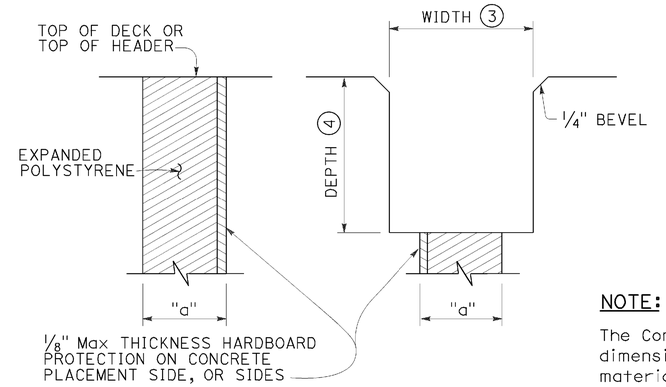

FORMING DETAIL SAWCUT DETAIL

NOTE:
The Contractor shall verify all controlling field dimensions before ordering or fabricatiing any material.

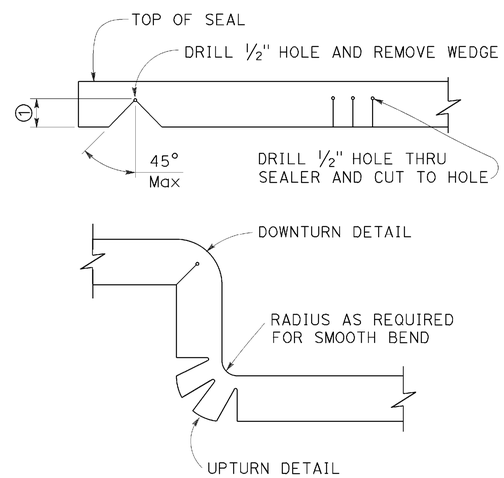

DETAIL A

NOTES:

1. Make smooth cuts from the bottom of seal to 1½" clear of top leaving at least one complete cell between the top of the cut and top of the seal. When necessary cut back of seal to clear conduit and round openings.
2. Opening in barrier to match width of sawn deck joint.
3. Sawcut groove widths shall be as ordered by the Engineer.
4. Depth of sawcut: Type A - Depth to be 2" minimum.
   Type B - Depth to be equal to or greater than the depth of seal measured along the contact surface, when compressed to minimum width position (W_2) plus dimensions shown.
5. MR (movement rating) as shown on other plan sheets.
6. Other depths must be approved by the Engineer.
7. A sidewalk joint shall be covered by an expansion joint armor.

DIMENSIONS "a" OF JOINT REQUIRED

MOVEMENT RATING (MR) 5	BRIDGE TYPE	"a" DIMENSION DECK CONCRETE PLACED		
		WINTER	FALL-SPRING	SUMMER
2"	ALL EXCEPT CIP/PS	1½"	1¼"	¾"
	CIP/PS	1¼"	1"	½"
1½"	ALL EXCEPT CIP/PS	1¼"	1"	½"
	CIP/PS	1"	¾"	½"
1"	ALL EXCEPT CIP/PS	1"	¾"	½"
	CIP/PS	¾"	½"	½"
½"	ALL EXCEPT CIP/PS	¾"	¾"	½"
	CIP/PS	½"	½"	½"

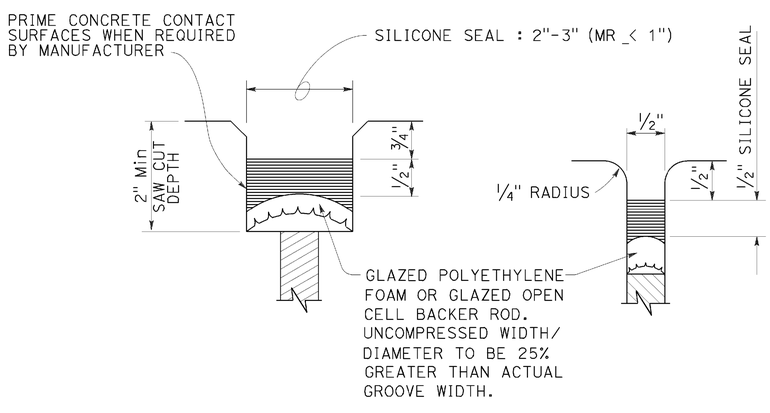

TYPE A SEAL
Movement rating : Silicone = 1" Max

TYPE AL SEAL
Longitudinal joints only

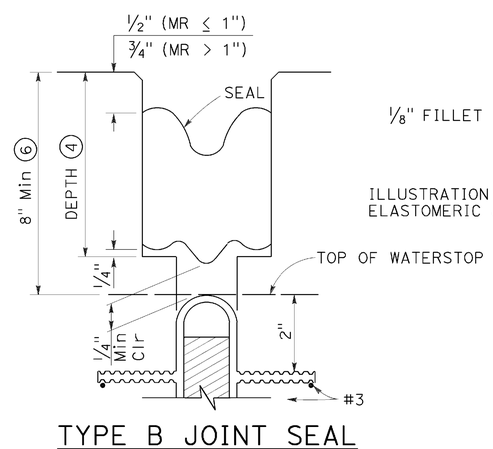

TYPE B JOINT SEAL
IN MINIMUM WIDTH POSITION (W_2)

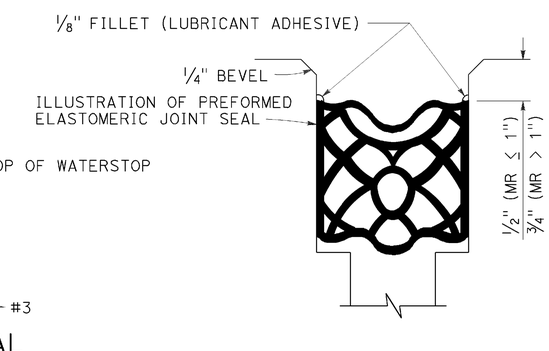

TYPE B SEAL
Movement Rating ≤ 2"

STATE OF CALIFORNIA
DEPARTMENT OF TRANSPORTATION

JOINT SEALS (MAXIMUM MOVEMENT RATING = 2")

NO SCALE

RSP B6-21 DATED OCTOBER 30, 2015 SUPERSEDES STANDARD PLAN B6-21 DATED MAY 20, 2011 - PAGE 283 OF THE STANDARD PLANS BOOK DATED 2010.

REVISED STANDARD PLAN RSP B6-21

2010 REVISED STANDARD PLAN RSP B6-21

DATE PLOTTED => 17-AUG-2016
TIME PLOTTED => 10:48

Dist	COUNTY	ROUTE	POST MILES TOTAL PROJECT	SHEET No.	TOTAL SHEETS
02	Sis	5	R57.8/R58.5	81	106

REGISTERED CIVIL ENGINEER

November 15, 2013
PLANS APPROVAL DATE

REGISTERED PROFESSIONAL ENGINEER Tillat Satter No. C42892 Exp. 3-31-14 CIVIL STATE OF CALIFORNIA

THE STATE OF CALIFORNIA OR ITS OFFICERS OR AGENTS SHALL NOT BE RESPONSIBLE FOR THE ACCURACY OR COMPLETENESS OF SCANNED COPIES OF THIS PLAN SHEET.

TO ACCOMPANY PLANS DATED 06-15-16

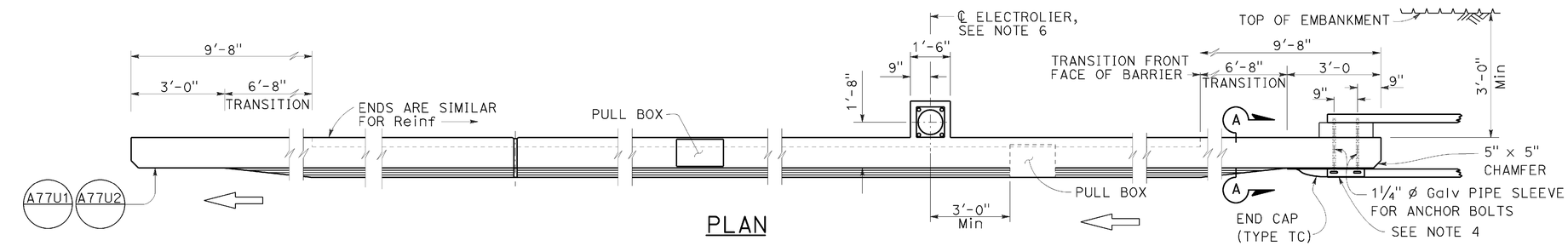

PLAN

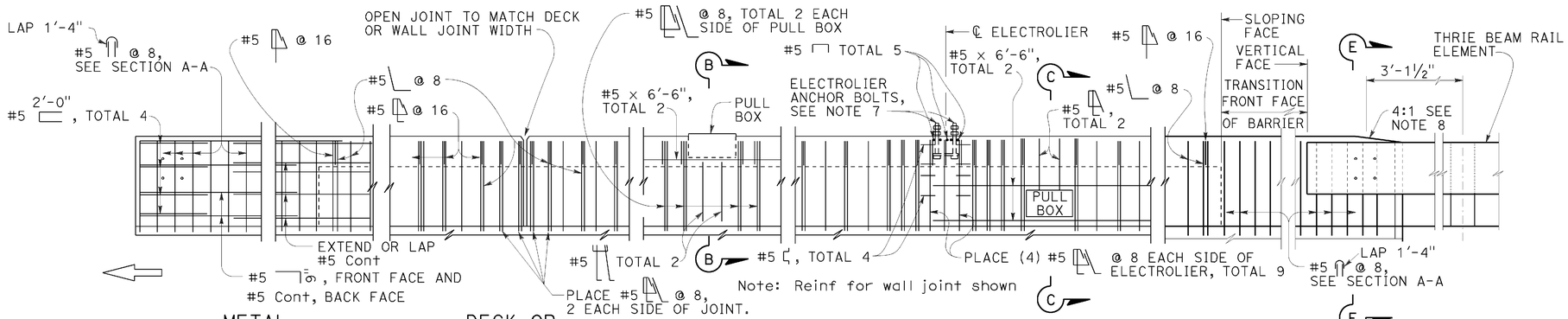

METAL RAILING CONNECTION

DECK OR WALL JOINT

ELEVATION

ELECTROLIER
See Note F

TYPE 736A

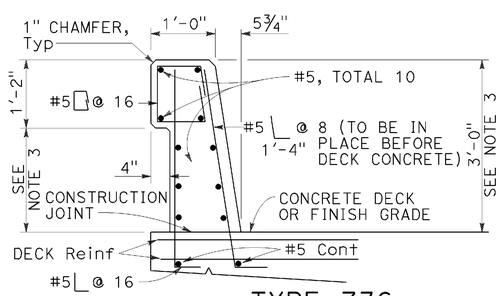

TYPE 736

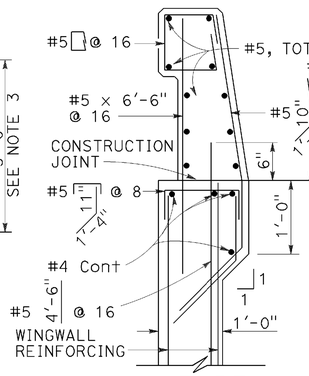

TYPE 736A

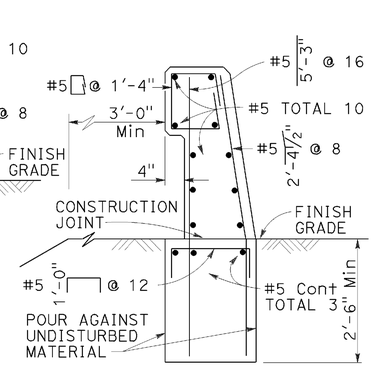

TYPE 736B

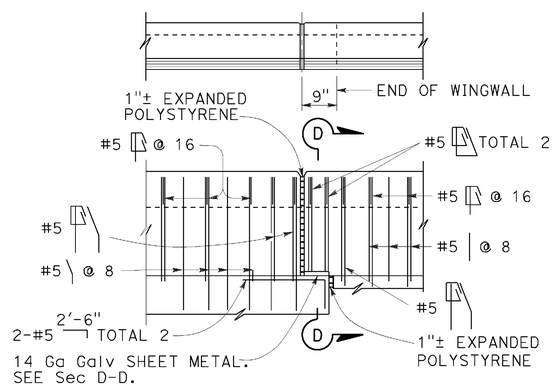

TYPE 736A TYPE 736B

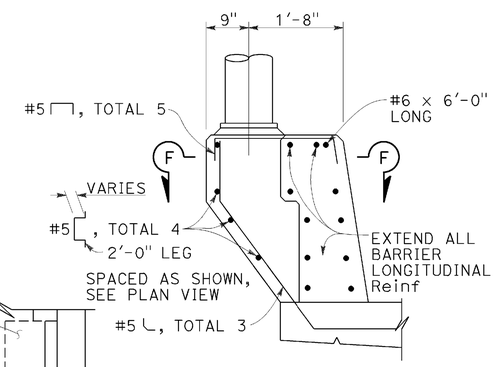

PEDESTAL ELEVATION

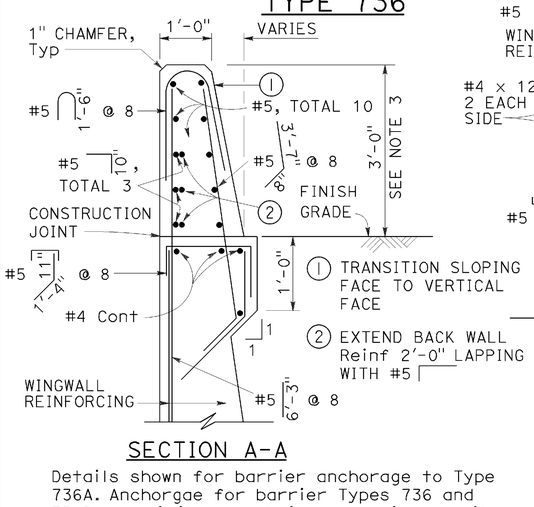

SECTION A-A

Details shown for barrier anchorage to Type 736A. Anchorgae for barrier Types 736 and 736B are similar to their respective details.

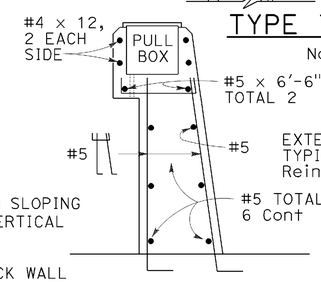

SECTION B-B

Note: Types 736A & 736B are similar to Type 736 except as noted

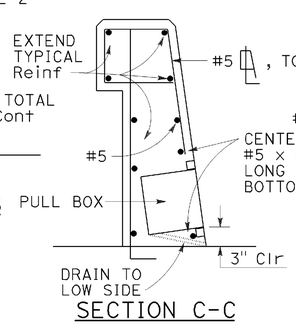

SECTION C-C
See Notes

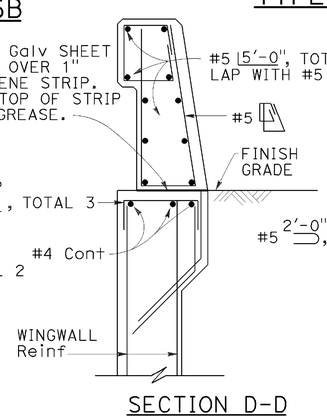

SECTION D-D

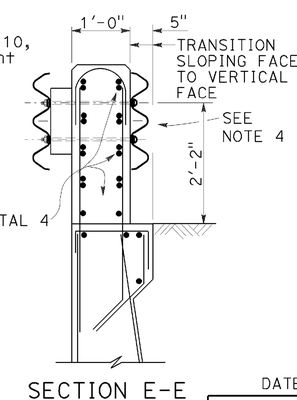

SECTION E-E
See Notes

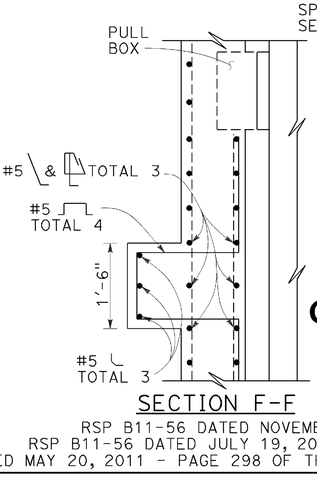

SECTION F-F

NOTES:

1. Walls are to be backfilled before barrier is placed.
2. Clearance to reinforcing steel in barrier to be 1", except as noted. Longitudinal reinforcement to stop at all expansion joints.
3. Dimensions may vary with roadway cross slope and with certain thickness of surfacing. See Project Plans.
4. For typical metal railing connection details not shown, see Revised Standard Plans RSP A77U1 and RSP A77U2.
5. See Standard Plans ES-9A, ES-9B, ES-9C, ES-9D and ES-9E for electrical details. The maximum number of conduits in the barrier is limited to two 2" conduits along with one 3" conduit. When a 3" conduit is used, it is restricted to the base of the barrier.
6. For electrolier mounting details, See Standard Plans ES-6A and ES-6B.
7. Minimum concrete edge distance, to the reinforcing shown, shall be maintained. Edge distance may be adjusted to accommodate increase in concrete cover for architectual treatment.
8. Taper the top of the end of the bridge railing at 4:1 to match the top elevation of the thrie beam rail element.

STATE OF CALIFORNIA
DEPARTMENT OF TRANSPORTATION

CONCRETE BARRIER TYPE 736

NO SCALE

RSP B11-56 DATED NOVEMBER 15, 2013 SUPERSEDES RSP B11-56 DATED JULY 19, 2013 AND STANDARD PLAN B11-56 DATED MAY 20, 2011 - PAGE 298 OF THE STANDARD PLANS BOOK DATED 2010.

REVISED STANDARD PLAN RSP B11-56

2010 REVISED STANDARD PLAN RSP B11-56

DATE PLOTTED => 21-JUN-2016
TIME PLOTTED => 13:58

Dist	COUNTY	ROUTE	POST MILES TOTAL PROJECT	SHEET No.	TOTAL SHEETS
02	Sis	5	R57.8/R58.5	82	106

Theresa Gabriel
REGISTERED ELECTRICAL ENGINEER

October 30, 2015
PLANS APPROVAL DATE

REGISTERED PROFESSIONAL ENGINEER Theresa Aziz Gabriel No. E15129 Exp. 6-30-16 ELECTRICAL STATE OF CALIFORNIA

THE STATE OF CALIFORNIA OR ITS OFFICERS OR AGENTS SHALL NOT BE RESPONSIBLE FOR THE ACCURACY OR COMPLETENESS OF SCANNED COPIES OF THIS PLAN SHEET.

TO ACCOMPANY PLANS DATED 06-15-16

LEGEND:

- AB — ABANDON. IF APPLIED TO CONDUIT, REMOVE CONDUCTORS
- BC — INSTALL PULL BOX IN EXISTING CONDUIT RUN
- BP — PEDESTRIAN BARRICADE, TYPE AS INDICATED ON PLAN
- CB — INSTALL CONDUIT INTO EXISTING PULL BOX
- CC — CONNECT NEW AND EXISTING CONDUIT. REMOVE EXISTING CONDUCTORS AND INSTALL CONDUCTORS AS INDICATED
- CF — CONDUIT TO REMAIN FOR FUTURE USE. REMOVE CONDUCTORS. INSTALL PULL TAPE
- DH — DETECTOR HANDHOLE
- FA — FOUNDATION TO BE ABANDONED
- IS — INSTALL SIGN ON SIGNAL MAST ARM
- NS — NO SLIP BASE ON STANDARD
- PEC — PHOTOELECTRIC CONTROL
- PEU — PHOTOELECTRIC UNIT
- RC — EQUIPMENT OR MATERIAL TO BE REMOVED AND BECOME THE PROPERTY OF THE CONTRACTOR
- RE — REMOVE ELECTROLIER, FUSES AND BALLAST. TAPE ENDS OF CONDUCTORS
- RL — RELOCATE EQUIPMENT
- RR — REMOVE AND REUSE EQUIPMENT
- RS — REMOVE AND SALVAGE EQUIPMENT
- SC — SPLICE NEW TO EXISTING CONDUCTORS
- SD — SERVICE DISCONNECT
- TSP — TELEPHONE SERVICE POINT

ABBREVIATIONS

AC+	UNDERGROUNDED CONDUCTOR
APS	ACCESSIBLE PEDESTRIAN SIGNAL
Batt	BATTERY
BBS	BATTERY BACKUP SYSTEM
BC	BOLT CIRCLE
Blk	BLACK
BP	BYPASS
BPB	BICYCLE PUSH BUTTON
C	CONDUIT
CB	CIRCUIT BREAKER
CCTV	CLOSED CIRCUIT TELEVISION
Ckt	CIRCUIT
CMS	CHANGEABLE MESSAGE SIGN
Ctid	CALTRANS IDENTIFICATION
Comm	COMMUNICATION
Cntl	CONTROL
DF	DEPARTMENT-FURNISHED
DLC	LOOP DETECTOR LEAD-IN CABLE
EMS	EXTINGUISHABLE MESSAGE SIGN
EVUC	EMERGENCY VEHICLE UNIT CABLE
EVUD	EMERGENCY VEHICLE UNIT DETECTOR
FB	FLASHING BEACON
FBCA	FLASHING BEACON CONTROL ASSEMBLY
FBS	FLASHING BEACON WITH SLIP BASE
FO	FIBER OPTIC
G	EQUIPMENT GROUNDING CONDUCTOR
GB	GROUND BUS
GFCI	GROUND FAULT CIRCUIT INTERRUPTER
Grn	GREEN
HAR	HIGHWAY ADVISORY RADIO
Hex	HEXAGONAL
HPS	HIGH PRESSURE SODIUM
IISNS	INTERNALLY ILLUMINATED STREET NAME SIGN
ISL	INDUCTION SIGN LIGHTING
LED	LIGHT EMITTING DIODE
LMA	LUMINAIRE MAST ARM
LPS	LOW PRESSURE SODIUM
Ltg	LIGHTING
Lum	LUMINAIRE
M	METERED
MAT	MAST ARM MOUNTING TOP ATTACHMENT
MAS	MAST ARM MOUNTING SIDE ATTACHMENT
MBPS	MANUAL BYPASS SWITCH
M/M	MULTIPLE TO MULTIPLE TRANSFORMER
Mtg	MOUNTING
MV	MERCURY VAPOR LIGHTING FIXTURE
MVDS	MICROWAVE VEHICLE DETECTION SYSTEM
N	NEUTRAL (GROUNDED CONDUCTOR)
NB	NEUTRAL BUS
NC	NORMALLY CLOSE
NO	NORMALLY OPEN
P	CIRCUIT BREAKER'S POLE
PB	PULL BOX
PBA	PUSH BUTTON ASSEMBLY
PEC	PHOTOELECTRIC CONTROL
Ped	PEDESTRIAN
PEU	PHOTOELECTRIC UNIT
PT	CONDUIT WITH PULL TAPE
PTR	POWER TRANSFER RELAY
RE	RELOCATED EQUIPMENT
RM	RAMP METERING
RWIS	ROADSIDE WEATHER INFORMATION SYSTEM
SB	SLIP BASE
SIC	SIGNAL INTERCONNECT CABLE
Sig	SIGNAL
SMA	SIGNAL MAST ARM
SNS	STREET NAME SIGN
SP	SERVICE POINT
TB	TERMINAL BOARD
TDC	TELEPHONE DEMARCATION CABINET
Temp	TEMPERATURE
TMS	TRAFFIC MONITORING STATION
TOS	TRAFFIC OPERATIONS SYSTEM
UPS	UNINTERRUPTABLE POWER SUPPLY
UPSC	UNINTERRUPTABLE POWER SUPPLY CONTROLLER
Veh	VEHICLE
VIVDS	VIDEO IMAGE VEHICLE DETECTION SYSTEM
Wht	WHITE
WIM	WEIGH-IN-MOTION
Xfmr	TRANSFORMER

SOFFIT AND WALL-MOUNTED LUMINAIRES

- PENDANT SOFFIT LUMINAIRE, 70 W HPS UNLESS OTHERWISE SPECIFIED
- FLUSH-MOUNTED SOFFIT LUMINAIRE, 70 W HPS UNLESS OTHERWISE SPECIFIED
- WALL-MOUNTED LUMINAIRE, 70 W HPS UNLESS OTHERWISE SPECIFIED
- EXISTING SOFFIT OR WALL-MOUNTED LUMINAIRE TO REMAIN UNMODIFIED
- EXISTING SOFFIT OR WALL-MOUNTED LUMINAIRE TO BE MODIFIED AS SPECIFIED

NOTE:
Arrow indicates "street side" of luminaire.

COMMONLY USED SYMBOLS FOR UNITED STATES CUSTOMARY UNITS OF MEASUREMENT:

SYMBOL	DEFINITIONS
Ω	OHMS
min	MINUTE
s	SECOND
bps	BITS PER SECOND
Bps	BYTES PER SECOND
A	AMPERE
V	VOLT
V(dc)	VOLT (DIRECT CURRENT)
V(ac)	VOLT (ALTERNATING CURRENT)
FC	FOOT - CANDLE
W	WATTS
VA	VOLT-AMPERE
M	MEGA
k	KILO
m	MILLI
μ	MICRO
P	PICO
Hz	HERTZ

MISCELLANEOUS ELECTROLIERS

NEW	EXISTING	
		LUMINAIRE ON WOOD POLE
		NON-STANDARD ELECTROLIER (SEE PROJECT LEGEND)
		CITY ELECTROLIER
		ELECTROLIER FOUNDATION (FUTURE INSTALLATION)

NOTES:

1. LED luminaires shall be 235 W when installed on Type 21, 21D, 30, 31 and 32 Standards, unless otherwise specified. LED luminaires shall be 165 W when installed on other type standards or poles, unless otherwise specified.
2. Luminaires shall be the cutoff type, ANSI Type III medium cutoff lighting distribution, unless otherwise specified.

STANDARD ELECTROLIER

NEW	EXISTING	STANDARD TYPE
		15
		15D
		15 STRUCTURE
		15D STRUCTURE
		21
		21D
		21 STRUCTURE
		21D STRUCTURE
		30
		31
		32

STATE OF CALIFORNIA
DEPARTMENT OF TRANSPORTATION

ELECTRICAL SYSTEMS (LEGEND AND ABBREVIATIONS)

NO SCALE

RSP ES-1A DATED OCTOBER 30, 2015 SUPERSEDES RSP ES-1A DATED JULY 19, 2013 AND STANDARD PLAN ES-1A DATED MAY 20, 2011 - PAGE 425 OF THE STANDARD PLANS BOOK DATED 2010.

REVISED STANDARD PLAN RSP ES-1A

2010 REVISED STANDARD PLAN RSP ES-1A

DATE PLOTTED => 21-JUN-2016
TIME PLOTTED => 13:58

Dist	COUNTY	ROUTE	POST MILES TOTAL PROJECT	SHEET No.	TOTAL SHEETS
02	Sis	5	R57.8/R58.5	83	106

Theresa Gabriel
REGISTERED ELECTRICAL ENGINEER

October 30, 2015
PLANS APPROVAL DATE

REGISTERED PROFESSIONAL ENGINEER Theresa Aziz Gabriel No. E15129 Exp. 6-30-16 ELECTRICAL STATE OF CALIFORNIA

THE STATE OF CALIFORNIA OR ITS OFFICERS OR AGENTS SHALL NOT BE RESPONSIBLE FOR THE ACCURACY OR COMPLETENESS OF SCANNED COPIES OF THIS PLAN SHEET.

TO ACCOMPANY PLANS DATED 06-15-16

CONDUIT

NEW	EXISTING	
		LIGHTING CONDUIT, UNLESS OTHERWISE INDICATED OR NOTED
		TRAFFIC SIGNAL CONDUIT
C	c	COMMUNICATION CONDUIT
T	t	TELEPHONE CONDUIT
F	f	FIRE ALARM CONDUIT
FO	fo	FIBER OPTIC CONDUIT
		CONDUIT TERMINATION
R	r	CONDUIT RISER ATTACHED TO THE STRUCTURE OR SERVICE POLE

SERVICE EQUIPMENT

NEW	EXISTING	
OH	oh	OVERHEAD LINES
U	U	WOOD POLE, "U" INDICATES UTILITY OWNED
		POLE GUY WITH ANCHOR
		UTILITY TRANSFORMER - GROUND MOUNTED
III	III	SERVICE EQUIPMENT ENCLOSURE TYPE. DOOR INDICATES FRONT OF ENCLOSURE
T	t	TELEPHONE DEMARCATION CABINET

POLE-MOUNTED SERVICE DESIGNATION

TYPE H SERVICE, 28'-10" — TYPE OF INSTALLATION AND POLE HEIGHT ABOVE GRADE

FLASHING BEACON

NEW	EXISTING	
R	R	FLASHING BEACON (ONE VEHICLE SIGNAL HEAD WITH BACKPLATE AND VISOR) "R" INDICATES RED INDICATION, "Y" INDICATES YELLOW INDICATION
Y Y	Y Y	FLASHING BEACON WITH TYPE 15-FBS STANDARD AND A SIGN.
R R	R R	FLASHING BEACON WITH TYPES 9, 9A OR 9B SIGN UNLESS OTHERWISE SPECIFIED OR INDICATED

SIGNAL EQUIPMENT

NEW	EXISTING	
		PEDESTRIAN SIGNAL HEAD
		PUSH BUTTON ASSEMBLY POST
		PEDESTRIAN BARRICADE
		VEHICLE SIGNAL HEAD (WITH BACKPLATE AND 3-SECTIONS: RED, YELLOW AND GREEN)
		VEHICLE SIGNAL HEAD WITH ANGLE VISOR
PV	PV	MODIFICATIONS OF BASIC SYMBOL: "L" INDICATES ALL NON-ARROW SECTIONS LOUVERED "LG" INDICATES LOUVERED GREEN SECTION ONLY "PV" INDICATES ALL 12" SECTIONS PROGRAMMED VISIBILITY "8" INDICATES ALL 8" SECTIONS (ONLY WHEN SPECIFIED)
		VEHICLE SIGNAL HEAD CONSISTING OF RED, YELLOW AND GREEN LEFT ARROW SECTIONS
		VEHICLE SIGNAL HEAD CONSISTING OF RED AND YELLOW SECTIONS WITH AN UP GREEN ARROW SECTION
		VEHICLE SIGNAL HEAD (5 SECTION) CONSISTING OF RED, YELLOW AND GREEN SECTIONS WITH YELLOW AND GREEN RIGHT ARROW SECTIONS
		TYPE 15TS STANDARD WITH VEHICLE SIGNAL HEAD AND LUMINAIRE
		TYPE 21TS STANDARD WITH VEHICLE SIGNAL HEAD AND LUMINAIRE
		STANDARD WITH LUMINAIRE AND SIGNAL MAST ARMS AND ATTACHED VEHICLE SIGNAL HEADS
		TYPE 1 STANDARD WITH ATTACHED VEHICLE SIGNAL HEADS
		STANDARD WITH A SIGNAL MAST ARM, ATTACHED VEHICLE SIGNAL HEADS AND INTERNALLY ILLUMINATED STREET NAME SIGN
		CONTROLLER ASSEMBLY. DOOR INDICATES FRONT OF CABINET

SIGNAL EQUIPMENT Cont

NEW	EXISTING	
		GUARD POST
		TYPE 1 STANDARD WITH RAMP METERING SIGN
		OPTICAL DETECTOR FOR THE EMERGENCY VEHICLE DETECTION

NOTES:

1. All signal sections shall be 12" unless shown otherwise.
2. Signal heads shall be provided with backplates unless shown otherwise.

ILLUMINATED OVERHEAD SIGN

NEW	EXISTING	
		SINGLE POST, SINGLE ILLUMINATED SIGN, BALANCED BUTTERFLY
		SINGLE POST, DOUBLE ILLUMINATED SIGN, BALANCED BUTTERFLY
		SINGLE POST, SINGLE ILLUMINATED SIGN, FULL CANTILEVER
		DOUBLE POST, SINGLE ILLUMINATED SIGN
		SINGLE ILLUMINATED SIGN MOUNTED ON STRUCTURE
		DOUBLE POST, SINGLE ILLUMINATED SIGN WITH ELECTROLIER

STATE OF CALIFORNIA
DEPARTMENT OF TRANSPORTATION

ELECTRICAL SYSTEMS (LEGEND AND ABBREVIATIONS)

NO SCALE

RSP ES-1B DATED OCTOBER 30, 2015 SUPERSEDES RSP ES-1B DATED JULY 19, 2013 AND STANDARD PLAN ES-1B DATED MAY 20, 2011 - PAGE 426 OF THE STANDARD PLANS BOOK DATED 2010.

REVISED STANDARD PLAN RSP ES-1B

2010 REVISED STANDARD PLAN RSP ES-1B

DATE PLOTTED => 21-JUN-2016
TIME PLOTTED => 13:58

Dist	COUNTY	ROUTE	POST MILES TOTAL PROJECT	SHEET No.	TOTAL SHEETS
02	Sis	5	R57.8/R58.5	84	106

Theresa Gabriel
REGISTERED ELECTRICAL ENGINEER

April 15, 2016
PLANS APPROVAL DATE

REGISTERED PROFESSIONAL ENGINEER Theresa Aziz Gabriel No. E15129 Exp. 6-30-16 ELECTRICAL STATE OF CALIFORNIA

THE STATE OF CALIFORNIA OR ITS OFFICERS OR AGENTS SHALL NOT BE RESPONSIBLE FOR THE ACCURACY OR COMPLETENESS OF SCANNED COPIES OF THIS PLAN SHEET.

TO ACCOMPANY PLANS DATED 06-15-16

2010 REVISED STANDARD PLAN RSP ES-1C

EQUIPMENT IDENTIFICATION

ILLUMINATED SIGN IDENTIFICATION:

SIGN No. 12345 — SIGN EQUIPMENT IDENTIFICATION CHARACTERS - PLACE ON POST OR STRUCTURE

10 ISL SCI 1.0

- 1.0 — TRANSFORMER RATING (kVA)
- SCI — LIGHTING CONTROL TYPE
- ISL — NUMBER AND TYPE OF FIXTURES

} DO NOT PLACE ON STANDARD OR STRUCTURE

ELECTROLIER OR EQUIPMENT IDENTIFICATION:

L2745 - 15'-0"

- 15'-0" — MAST ARM LENGTH, IF SHOWN. DO NOT PLACE ON STANDARD OR STRUCTURE
- L2745 — EQUIPMENT IDENTIFICATION CHARACTERS - PLACE ON STANDARD OR STRUCTURE. EXISTING EQUIPMENT IDENTIFICATION CHARACTERS ARE SHOWN IN PARENTHESIS

CONDUIT AND CONDUCTOR IDENTIFICATION:

1½"C, 2#10, 15#14, 2 DLC, 12P#18 (PAIR)

- 2#10, 15#14, 2 DLC, 12P#18 — NUMBER AND SIZE OF CONDUCTORS AND CABLES
- 1½"C — SIZE OF CONDUIT IN INCHES

ø1, ø2, ø2P, etc.	TRAFFIC PHASE IDENTIFICATION FOR SIGNALS, DETECTORS AND PHASE DIAGRAMS
1 2 3	LEGEND NUMBERS
A B C	EQUIPMENT, SIGNAL POLES, INSTALLATION OR ITEMS
1 2 3	CONDUIT RUN NUMBERS

SIGNAL AND LIGHTING STANDARD (TYPICAL DESIGNATION):

19A - 3 - 100

- 100 — WIND VELOCITY = 100 mph
- 3 — CASE 3 ARM LOADING
- 19A — STANDARD TYPE
- STANDARD PLAN SHEET NUMBER
- DETAIL, NUMBER, SECTION, TYPE OR ELEVATION

MISCELLANEOUS EQUIPMENT

NEW	EXISTING	
CMS	cms	CHANGEABLE MESSAGE SIGN
		CLOSED CIRCUIT TELEVISION CAMERA
		HIGHWAY ADVISORY RADIO POLE AND ANTENNA
EMS	ems	LED EXTINGUISHABLE MESSAGE SIGN
M V	m v	DETECTION DEVICE M = MICROWAVE SENSOR V = VIDEO IMAGE SENSOR

WIRING DIAGRAM LEGEND

- EXTERNAL CONDUCTOR
- CONDUCTOR OR BUS
- TIE POINT
- CONTACTOR COIL
- CONTACTOR, NO CONTACT
- TERMINAL BLOCKS
- CONTACTOR, NC CONTACT
- ENCLOSURE BOND
- GROUNDING ELECTRODE
- CIRCUIT BREAKER
- RECEPTACLE

PULL BOXES

NEW	EXISTING	
		PULL BOX, No. 5 UNLESS OTHERWISE INDICATED OR NOTED
3	9A(21)	PULL BOX, ADDITIONAL DESIGNATIONS OR DESCRIPTIONS

3 No. 3½ PULL BOX
5 No. 5 PULL BOX
6 No. 6 PULL BOX
7 No. 7 PULL BOX (CEILING)
8 No. 8 PULL BOX
9 No. 9 PULL BOX (STRUCTURE)
9A No. 9A PULL BOX (STRUCTURE)

(C) COMMUNICATIONS PULL BOX
(E) PULL BOX WITH EXTENSION
(S) SPRINKLER CONTROL PULL BOX
(21) ANCHOR BOLTS AND CONDUIT FOR FUTURE INSTALLATION OF TYPE 21 STANDARD
(T) TRAFFIC PULL BOX

VEHICLE DETECTORS

5 J 9 U

- VEHICLE DETECTOR DESIGNATION
- U = UPPER, L = LOWER
- SLOT NUMBER IN INPUT FILE
- INPUT FILE (I OR J)
- PHASE

NEW	EXISTING	
		TYPE A LOOP DETECTOR. OUTLINE OF SAW CUT SHOWN
		TYPE B LOOP DETECTOR. OUTLINE OF SAW CUT SHOWN
		TYPE C LOOP DETECTOR. OUTLINE OF SAW CUT SHOWN
		TYPE D LOOP DETECTOR. OUTLINE OF SAW CUT SHOWN
		TYPE E LOOP DETECTOR. OUTLINE OF SAW CUT SHOWN
		TYPE Q LOOP DETECTOR. OUTLINE OF SAW CUT SHOWN
DH	dh	DETECTOR HANDHOLE
		MICROWAVE OR VIDEO DETECTION ZONE

STATE OF CALIFORNIA
DEPARTMENT OF TRANSPORTATION

ELECTRICAL SYSTEMS (LEGEND AND ABBREVIATIONS)

NO SCALE

RSP ES-1C DATED APRIL 15, 2016 SUPERSEDES RSP ES-1C DATED OCTOBER 30, 2015 AND RSP ES-1C DATED JULY 19, 2013 AND STANDARD PLAN ES-1C DATED MAY 20, 2011 - PAGE 427 OF THE STANDARD PLANS BOOK DATED 2010.

REVISED STANDARD PLAN RSP ES-1C

DATE PLOTTED => 21-JUN-2016
TIME PLOTTED => 13:58

Dist	COUNTY	ROUTE	POST MILES TOTAL PROJECT	SHEET No.	TOTAL SHEETS
02	Sis	5	R57.8/R58.5	85	106

Theresa Gabriel
REGISTERED ELECTRICAL ENGINEER

April 15, 2016
PLANS APPROVAL DATE

REGISTERED PROFESSIONAL ENGINEER Theresa Aziz Gabriel No. E15129 Exp. 6-30-16 ELECTRICAL STATE OF CALIFORNIA

THE STATE OF CALIFORNIA OR ITS OFFICERS OR AGENTS SHALL NOT BE RESPONSIBLE FOR THE ACCURACY OR COMPLETENESS OF SCANNED COPIES OF THIS PLAN SHEET.

TO ACCOMPANY PLANS DATED 06-15-16

2010 REVISED STANDARD PLAN RSP ES-3C

NOTES:

1. Controller units, plug-mounted equipment, shelf-mounted equipment and wall-mounted equipment shall be located to permit safe and easy removal or replacement without removing any other piece of equipment.
2. Cabinet fan may be installed at an alternate location near the top of the cabinet when approved by the Engineer.
3. Where telephone interconnect is required, a minimum of 5" clear vertical space shall be provided inside the cabinet for the equipment.
4. Telephone interconnect conductors shall be enclosed in a ¾"C or larger conduit through the foundation. Type 4 conduit shall be used to separate telephone and power conductors in cabinets.

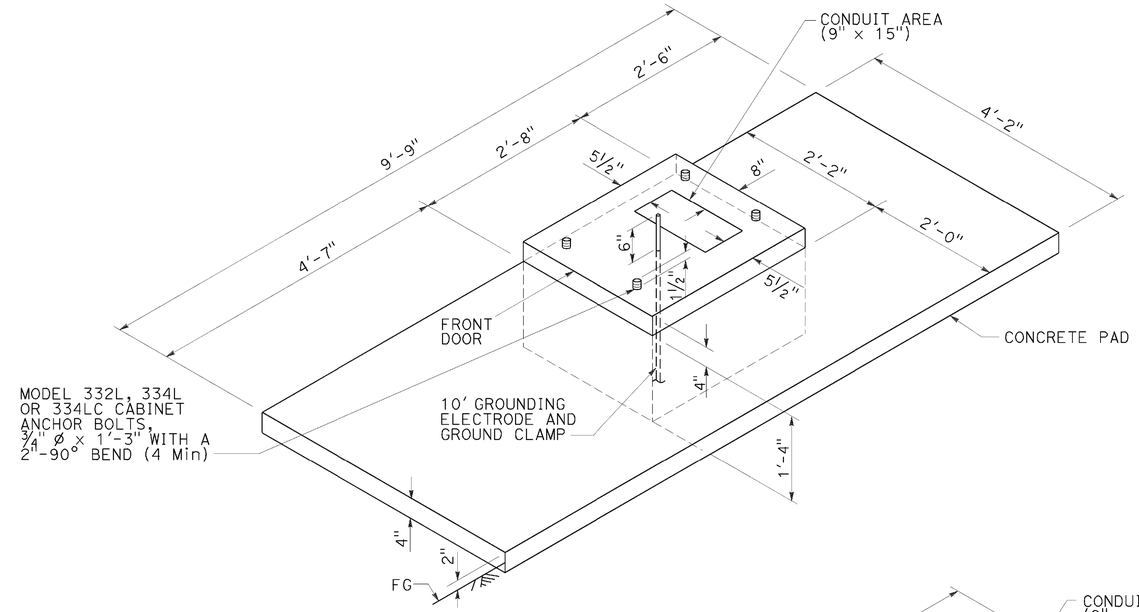

FOUNDATION AND PAD DETAIL

Model 332L, 334L and 334LC

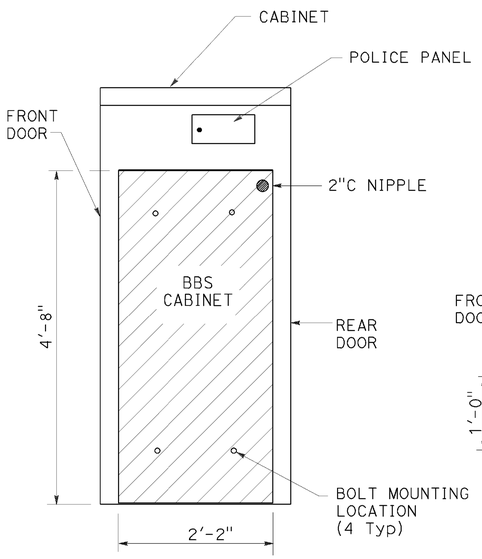

SIDE VIEW

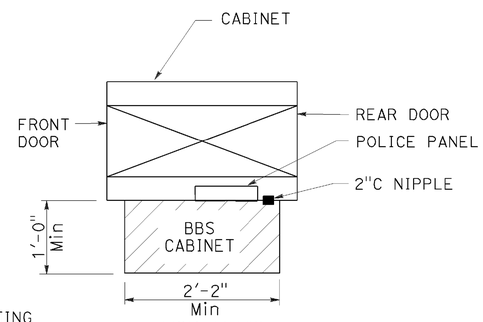

TOP VIEW

BBS CABINET MOUNTED TO THE MODEL 332L CABINET

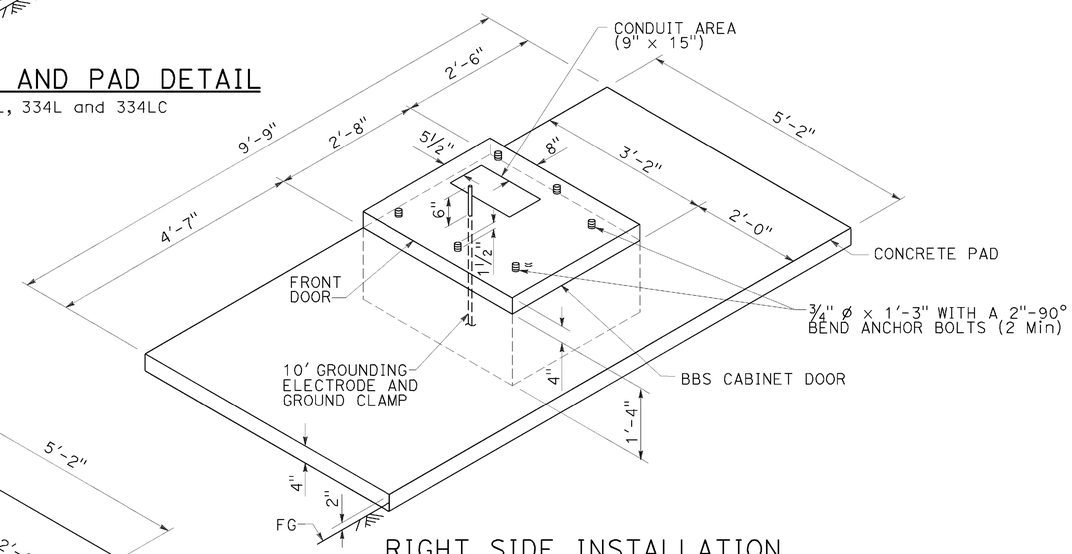

RIGHT SIDE INSTALLATION

DETAIL B

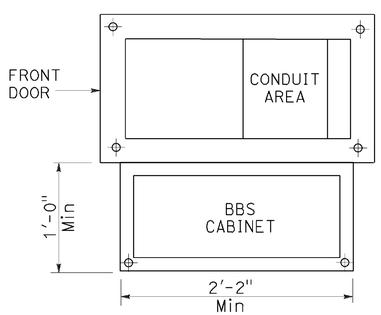

BASE PLAN FOR BBS MOUNTED TO THE MODEL 332L CABINET

(FOR DIMENSIONS AND DETAILS NOT SHOWN, SEE CABINET HOUSING DETAILS OF THE TRANSPORTATION ELECTRICAL EQUIPMENT SPECIFICATION (TEES))

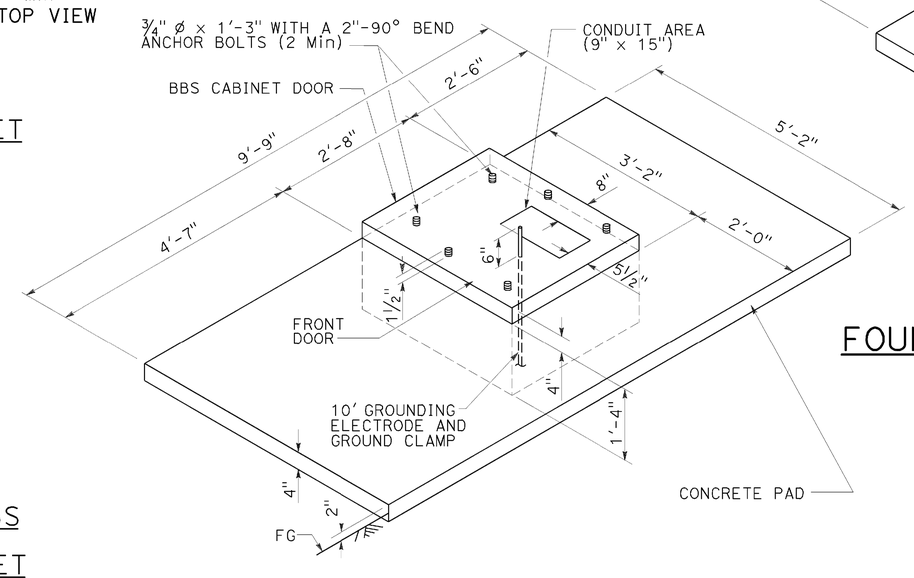

LEFT SIDE INSTALLATION

DETAIL A

MODIFIED MODEL 332L CABINET FOUNDATION DETAIL FOR BATTERY BACKUP SYSTEM

STATE OF CALIFORNIA
DEPARTMENT OF TRANSPORTATION

ELECTRICAL SYSTEMS (CONTROLLER CABINET FOUNDATION AND PAD DETAILS)

NO SCALE

RSP ES-3C DATED APRIL 15, 2016 SUPERSEDES RSP ES-3C DATED OCTOBER 30, 2015 AND STANDARD PLAN ES-3C DATED MAY 20, 2011 - PAGE 437 OF THE STANDARD PLANS BOOK DATED 2010.

REVISED STANDARD PLAN RSP ES-3C

DATE PLOTTED => 21-JUN-2016
TIME PLOTTED => 13:59

Dist	COUNTY	ROUTE	POST MILES TOTAL PROJECT	SHEET No.	TOTAL SHEETS
02	Sis	5	R57.8/R58.5	86	106

Theresa Gabriel
REGISTERED ELECTRICAL ENGINEER

April 15, 2016
PLANS APPROVAL DATE

REGISTERED PROFESSIONAL ENGINEER Theresa Aziz Gabriel No. E15129 Exp. 6-30-16 ELECTRICAL STATE OF CALIFORNIA

THE STATE OF CALIFORNIA OR ITS OFFICERS OR AGENTS SHALL NOT BE RESPONSIBLE FOR THE ACCURACY OR COMPLETENESS OF SCANNED COPIES OF THIS PLAN SHEET.

TO ACCOMPANY PLANS DATED 06-15-16

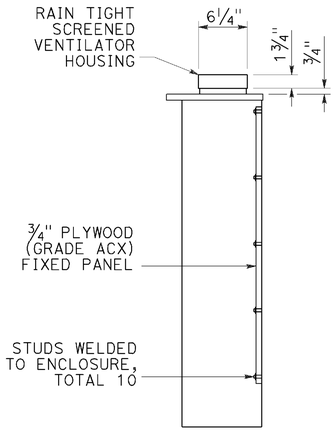

SECTION A-A

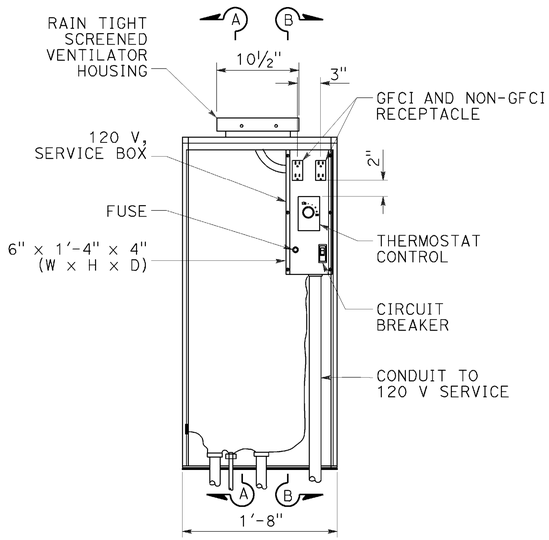

FRONT VIEW

INTERIOR DETAIL A

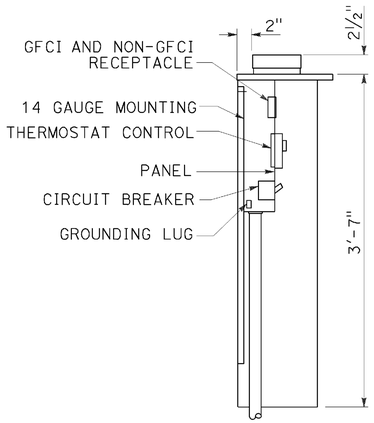

SECTION B-B

NOTE:

1. Dimensions are nominal.

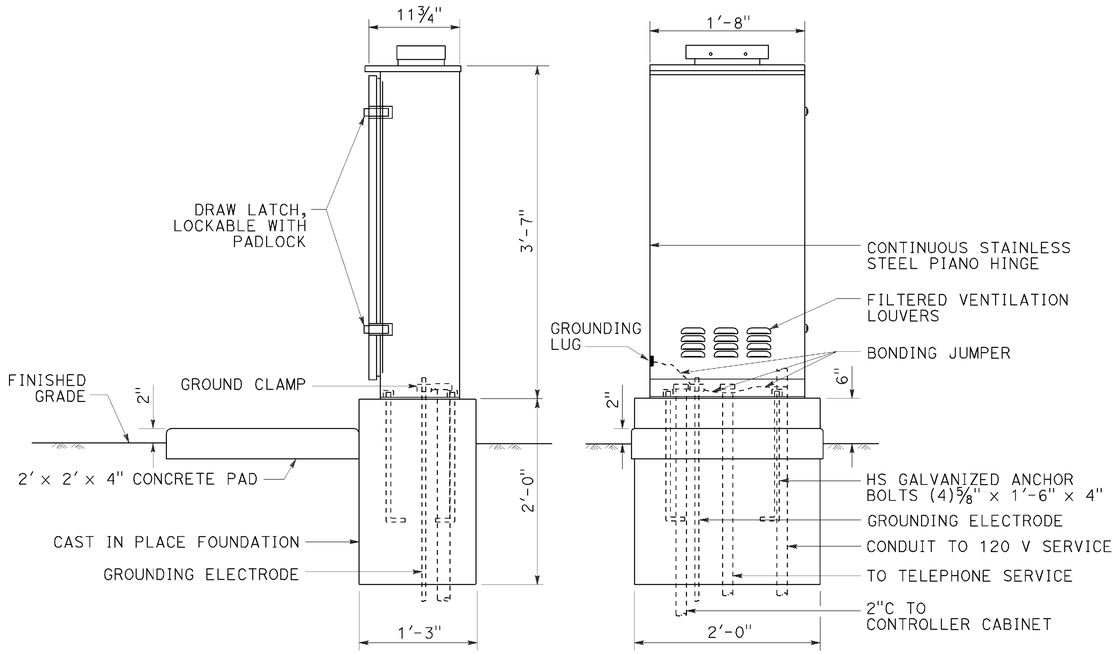

SIDE VIEW FRONT VIEW

EXTERIOR DETAIL B

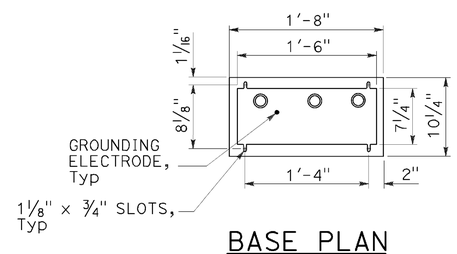

BASE PLAN

DETAIL C

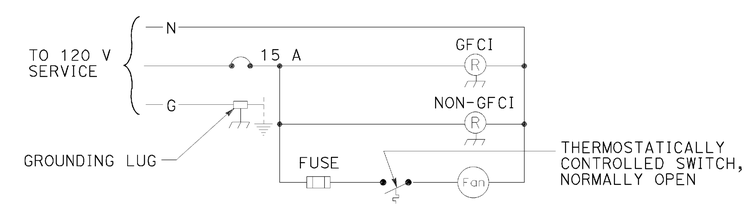

WIRING DIAGRAM

DETAIL D

STATE OF CALIFORNIA
DEPARTMENT OF TRANSPORTATION

ELECTRICAL SYSTEMS (TELEPHONE DEMARCATION CABINET, TYPE B)

NO SCALE

RSP ES-3E DATED APRIL 15, 2016 SUPERSEDES RSP ES-3E DATED OCTOBER 30, 2015 AND STANDARD PLAN ES-3E DATED MAY 20, 2011 - PAGE 439 OF THE STANDARD PLANS BOOK DATED 2010.

REVISED STANDARD PLAN RSP ES-3E

2010 REVISED STANDARD PLAN RSP ES-3E

DATE PLOTTED => 21-JUN-2016
TIME PLOTTED => 13:59

DIST	COUNTY	ROUTE	POST MILES TOTAL PROJECT	SHEET NO.	TOTAL SHEETS
02	Sis	5	R57.8/R58.5	87	106

Theresa Gabriel
REGISTERED ELECTRICAL ENGINEER

April 15, 2016
PLANS APPROVAL DATE

REGISTERED PROFESSIONAL ENGINEER Theresa Aziz Gabriel No. E15129 Exp. 6-30-16 ELECTRICAL STATE OF CALIFORNIA

THE STATE OF CALIFORNIA OR ITS OFFICERS OR AGENTS SHALL NOT BE RESPONSIBLE FOR THE ACCURACY OR COMPLETENESS OF SCANNED COPIES OF THIS PLAN SHEET.

TO ACCOMPANY PLANS DATED 06-15-16

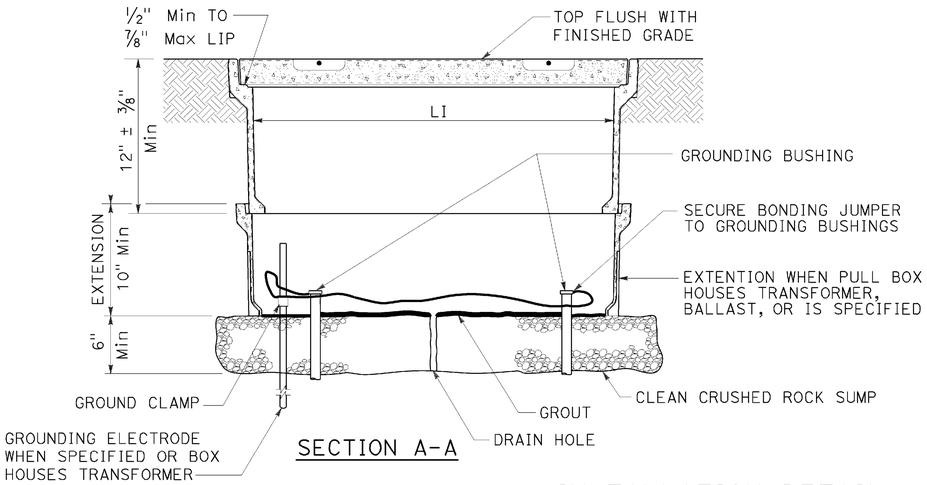

SECTION A-A

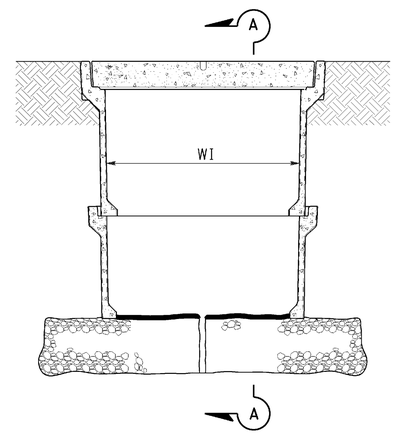

SIDE VIEW

INSTALLATION DETAILS

DETAIL A

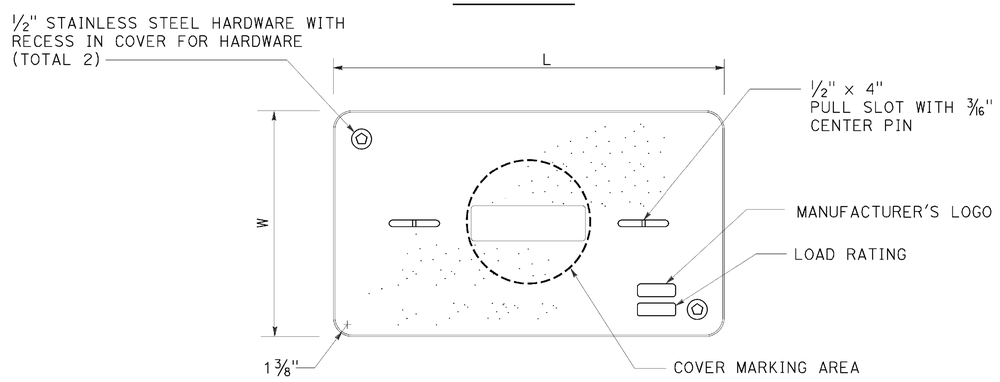

COVER TOP VIEW

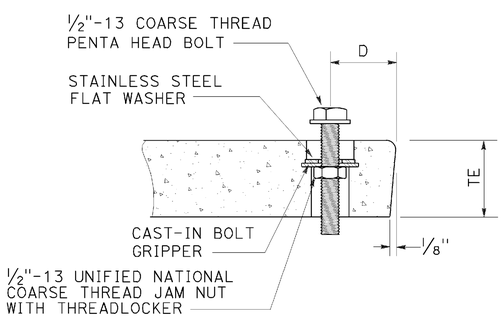

TYPICAL COVER CAPTIVE BOLT

OR SIMILAR

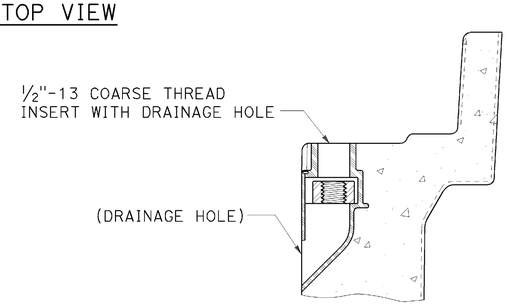

TYPICAL THREADED INSERT

OR SIMILAR

NOTES:

1. The nominal dimensions of the opening in which the cover sets shall be the same as the cover dimensions except the length and width dimensions shall be 1/8" greater.
2. Covers and boxes shall be interchangeable with California standard male and female gages. When interchanged with a standard male or female gage, the top surfaces shall be flush within 1/8". Top outside radius of covers and pull boxes shall have a 1/8" radius.
3. Dimensions for the cover for non-traffic pull box are nominal values.

DIMENSION TABLE

PULL BOX	PULL BOX					COVER				
	MINIMUM DEPTH BOX	MINIMUM DEPTH EXTENSION	MINIMUM WEIGHT	LI Min	WI Min	TE	D	L	W	MINIMUM WEIGHT
No. 3 1/2	12"	N/A	40 lb	1' - 3"	9"	1 3/4"	1 3/4"	1'-3 1/4" - 1'-3 3/8"	10" - 10 1/8"	30 lb
No. 5	12"	10"	55 lb	1' - 8"	11"	2"	1 3/4"	1'-11 1/4"	1'-1 3/4"	60 lb
No. 6	12"	10"	70 lb	2' - 4 1/4"	1' - 3 1/4"	2"	2"	2'-6 1/2"	1'-5 1/2"	85 lb

STATE OF CALIFORNIA
DEPARTMENT OF TRANSPORTATION

ELECTRICAL SYSTEMS (NON-TRAFFIC PULL BOX)

NO SCALE

RSP ES-8A DATED APRIL 15, 2016 SUPERSEDES RSP ES-8A DATED OCTOBER 30, 2015 AND RSP ES-8A DATED JULY 19, 2013 AND RSP ES-8A DATED JANUARY 20, 2012 THAT SUPPLEMENTS THE STANDARD PLANS BOOK DATED 2010.

REVISED STANDARD PLAN RSP ES-8A

2010 REVISED STANDARD PLAN RSP ES-8A

DATE PLOTTED => 21-JUN-2016
TIME PLOTTED => 13:59

DIST	COUNTY	ROUTE	POST MILES TOTAL PROJECT	SHEET NO.	TOTAL SHEETS
02	Sis	5	R57.8/R58.5	88	106

Theresa Gabriel
REGISTERED ELECTRICAL ENGINEER

April 15, 2016
PLANS APPROVAL DATE

REGISTERED PROFESSIONAL ENGINEER
Theresa Aziz Gabriel
No. E15129
Exp. 6-30-16
ELECTRICAL
STATE OF CALIFORNIA

THE STATE OF CALIFORNIA OR ITS OFFICERS OR AGENTS SHALL NOT BE RESPONSIBLE FOR THE ACCURACY OR COMPLETENESS OF SCANNED COPIES OF THIS PLAN SHEET.

TO ACCOMPANY PLANS DATED 06-15-16

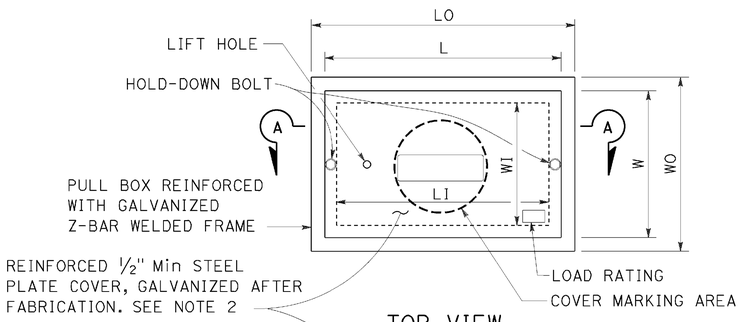

TOP VIEW

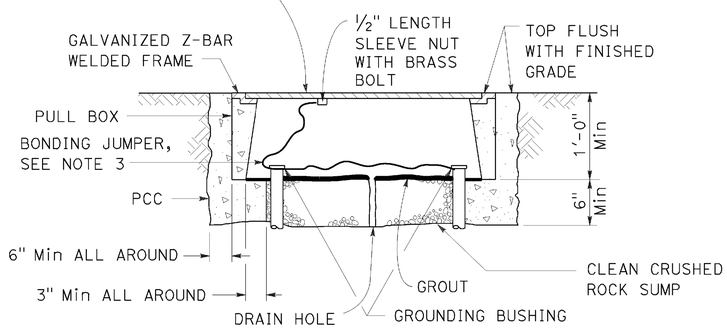

SECTION A-A

No. 3½(T), No. 5(T) AND No. 6(T) TRAFFIC PULL BOX

NOTES:

1. Traffic pull box shall be provided with steel cover and special concrete footing. Steel cover shall have embossed non-skid pattern.
2. Steel reinforcing shall be as regularly used in the standard products of the respective manufacturer.
3. Bonding jumper for metal covers shall be 3' long, minimum.
4. The nominal dimensions of the opening in which the cover sets shall be the same as the cover dimensions except the length and width dimensions shall be ⅛" greater.
5. Covers and boxes shall be interchangeable with California standard male and female gages. When interchanged with a standard male or female gage, the top surfaces shall be flush within ⅛".

DIMENSION TABLE

PULL BOX	PULL BOX						COVER	
	MINIMUM * THICKNESS	MINIMUM DEPTH BOX AND EXTENSION	LO	LI	WO	WI	L **	W **
No. 3½(T)	1½"	1'-0"	1'-10" - 1'-11"	1'-5" - 1'-6½"	1'-3" - 1'-4"	10" - 1'-0"	1'-8" -1'-8½"	1'-1" - 1'-2"
No. 5(T)	1¾"	1'-0"	2'-5" - 2'-6"	2'-0" - 2'-1"	1'-6" - 1'-7"	1'-1" - 1'-2"	2'-3" - 2'-3½"	1'-4" - 1'-4½"
No. 6(T)	2"	1'-0"	2'-11" - 3'-1"	2'-6" - 2'-7"	1'-10" - 2'-0"	1'-5" - 1'-6"	2'-9" - 2'-9½"	1'-8" - 1'-8½"

* EXCLUDING CONDUIT WEB ** TOP DIMENSION

STATE OF CALIFORNIA
DEPARTMENT OF TRANSPORTATION

ELECTRICAL SYSTEMS (TRAFFIC PULL BOX)

NO SCALE

RSP ES-8B DATED APRIL 15, 2016 SUPERSEDES RSP ES-8B DATED OCTOBER 30, 2015 AND RSP ES-8B DATED JULY 19, 2013 AND RSP ES-8B DATED JANUARY 20, 2012 THAT SUPPLEMENTS THE STANDARD PLANS BOOK DATED 2010.

REVISED STANDARD PLAN RSP ES-8B

2010 REVISED STANDARD PLAN RSP ES-8B

DATE PLOTTED => 21-JUN-2016
TIME PLOTTED => 13:59

DIST	COUNTY	ROUTE	POST MILES TOTAL PROJECT	SHEET No.	TOTAL SHEETS
02	Sis	5	R57.8/R58.8	89	106

REGISTERED CIVIL ENGINEER — DATE 6-9-16

06-15-16
PLANS APPROVAL DATE

REGISTERED PROFESSIONAL ENGINEER — William W Addlespurger — No. 50697 — Exp. 09-30-17 — CIVIL — STATE OF CALIFORNIA

The State of California or its officers or agents shall not be responsible for the accuracy or completeness of scanned copies of this plan sheet.

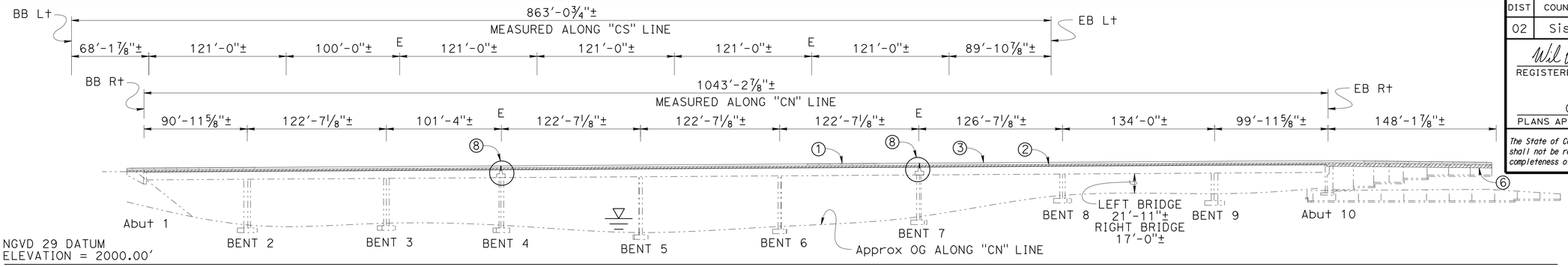

DEVELOPED ELEVATION

1" = 50'-0"

NOTES:

1. Existing Type 11 Metal Railing to be removed and salvaged.
2. Existing Type 9 Concrete Barrier and Bridge Deck Overhang to be removed and replaced.
3. Concrete Barrier Type 736
4. Paint Bridge Number and Name of Structure.
5. Paint Bent Numbers on wide shoulder side.
6. New Barrier Slab Construction
7. Structure Approach Type R (30S), and Joint Seals
8. Fabricated WABO Strip Seal
9. Clean Expansion Joint (Depth = 1'-3") or to top of waterstop.
10. Neoprene Gland
11. Temporary Railing Type K, see "ROADWAY PLANS".

LEGEND:

- Indicates Existing Structure
- Indicates Bridge Removal (Portion)
- Indicates Point of Minimum Vertical Clearance
- E Indicates Expansion Bent

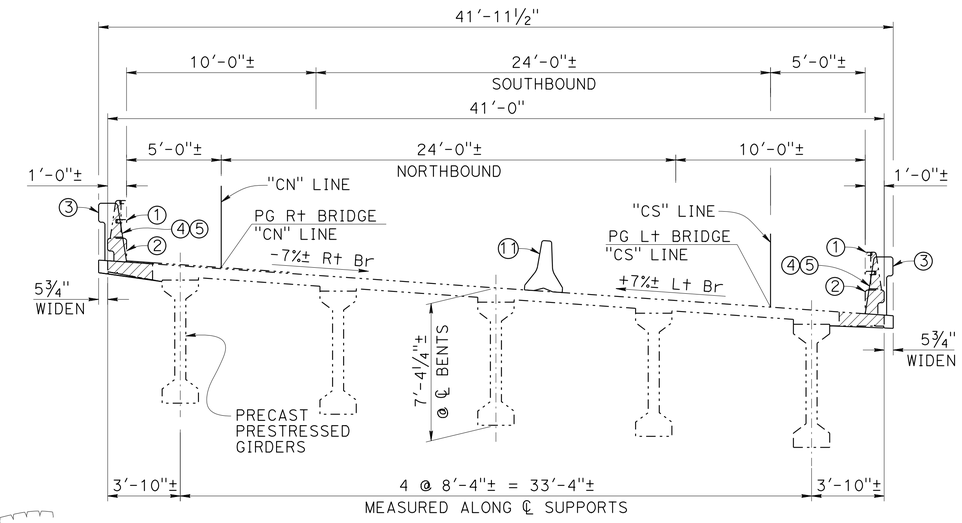

NOTE:
Right Bridge shown, Left Bridge similar. For complete staging, see "ROADWAY PLANS"

TYPICAL SECTION

¼" = 1'-0"

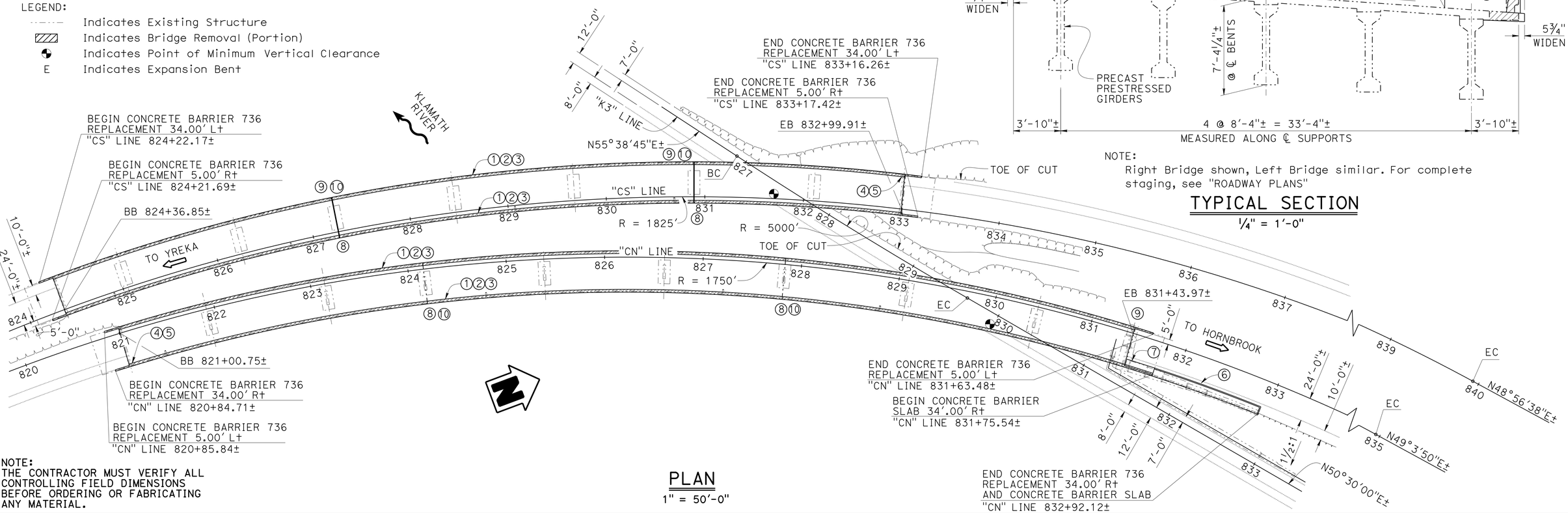

NOTE:
THE CONTRACTOR MUST VERIFY ALL CONTROLLING FIELD DIMENSIONS BEFORE ORDERING OR FABRICATING ANY MATERIAL.

PLAN

1" = 50'-0"

Matt Holm
DESIGN ENGINEER

	BY	CHECKED			
DESIGN	B. Addlespurger	D. Menzmer	LOAD & RESISTANCE FACTOR DESIGN	LOADING: EXTREME EVENT II	
DETAILS	H. Mauroschadt	D. Menzmer	LAYOUT	B. Addlespurger	D. Menzmer
QUANTITIES	J. Wang	B. Addlespurger	SPECIFICATIONS	T. Nedwick	PLANS AND SPECS COMPARED X

ORIGINAL SCALE IN INCHES FOR REDUCED PLANS 0 1 2 3

STATE OF CALIFORNIA
DEPARTMENT OF TRANSPORTATION

DIVISION OF ENGINEERING SERVICES
STRUCTURE DESIGN
DESIGN BRANCH 12

BRIDGE NO. 02-0134R/L
POST MILE R 58.2

KLAMATH RIVER BRIDGE & SEPARATION
GENERAL PLAN

UNIT: 3606
PROJECT NUMBER & PHASE: 0215000021
CONTRACT NO.: 02-4F58U

DISREGARD PRINTS BEARING EARLIER REVISION DATES

REVISION DATES: 11-18-15 3-29-16 3-15-16

SHEET 1 OF 11

USERNAME => S123119 DATE PLOTTED => 21-JUN-2016 TIME PLOTTED => 13:59

STRUCTURES DESIGN GENERAL PLAN SHEET (ENGLISH) (REV.09-01-10)

FILE => 02-0134rl-a-gp.dgn

DIST	COUNTY	ROUTE	POST MILES TOTAL PROJECT	SHEET No.	TOTAL SHEETS
02	Sis	5	R57.8/R58.8	90	106

REGISTERED CIVIL ENGINEER — DATE 6-9-16

PLANS APPROVAL DATE 06-15-16

The State of California or its officers or agents shall not be responsible for the accuracy or completeness of scanned copies of this plan sheet.

REGISTERED PROFESSIONAL ENGINEER — William W Addlespurger — No. 50697 — Exp. 09-30-17 — CIVIL — STATE OF CALIFORNIA

INDEX TO PLANS

SHEET NO.	TITLE
1.	GENERAL PLAN
2.	INDEX TO PLANS
3.	TYPICAL SECTION
4.	CFRP LAYOUT
5.	EXPANSION JOINT DETAILS NO. 1
6.	EXPANSION JOINT DETAILS NO. 2
7.	DECK REINFORCEMENT DETAILS
8.	DECK DRAIN DETAILS
9.	BARRIER DETAILS NO. 1
10.	BARRIER DETAILS NO. 2
11.	BARRIER DETAILS NO. 3

STANDARD PLANS 2010

	A10A	ABBREVIATIONS (SHEET 1 OF 2)
RSP	A10B	ABBREVIATIONS (SHEET 2 OF 2)
	B0-3	BRIDGE DETAILS
	B0-5	BRIDGE DETAILS
	B0-13	BRIDGE DETAILS
RSP	B6-21	JOINT SEALS (MAXIMUM MOVEMENT RATING = 2")
RSP	B11-56	CONCRETE BARRIER TYPE 736
RSP	P10	CONCRETE PAVEMENT - DOWEL BAR DETAILS
RSP	D99A	STRUCTURAL SECTION DRAINAGE SYSTEM DETAILS
RSP	D99B	EDGE DRAIN OUTLET AND VENT DETAILS
RSP	D99D	CROSS DRAIN INTERCEPTOR DETAILS

STANDARD PLAN SHEET No.

DETAIL No.

GENERAL NOTES

DESIGN:

AASHTO LRFD BRIDGE DESIGN SPECIFICATIONS, 6th Edition and California Amendments, dated January 2014

ACI 440.2R-08 Guide for the Design and Construction of Externally Bonded FRP Systems for Strengthening Concrete Structures.

AASHTO-GUIDE SPECIFICATIONS for Design of Bonded FRP Systems for Repair and Strengthening of Concrete Bridge Elements. First Edition 2012.

BARRIER LOADING: (Test Level 4)

CONCRETE:

f_y : 60 ksi (All bar reinforcement is epoxy coated reinforcement, unless noted)

f'_c : 5 ksi deck overhangs and existing superstructure

f'_c : 3.6 ksi else

CARBON FIBER REINFORCED POLYMER (CFRP) NEAR SURFACE MOUNTED (NSM)

MATERIAL	TENSILE STRENGTH (ksi)	MINIMUM TENSILE MODULUS OF ELASTICITY (ksi)	ULTIMATE STRAIN (%)
NSM PULTRUDED STRIP	315	18000	1.75

NOTE:
THE CONTRACTOR MUST VERIFY ALL CONTROLLING FIELD DIMENSIONS BEFORE ORDERING OR FABRICATING ANY MATERIAL.

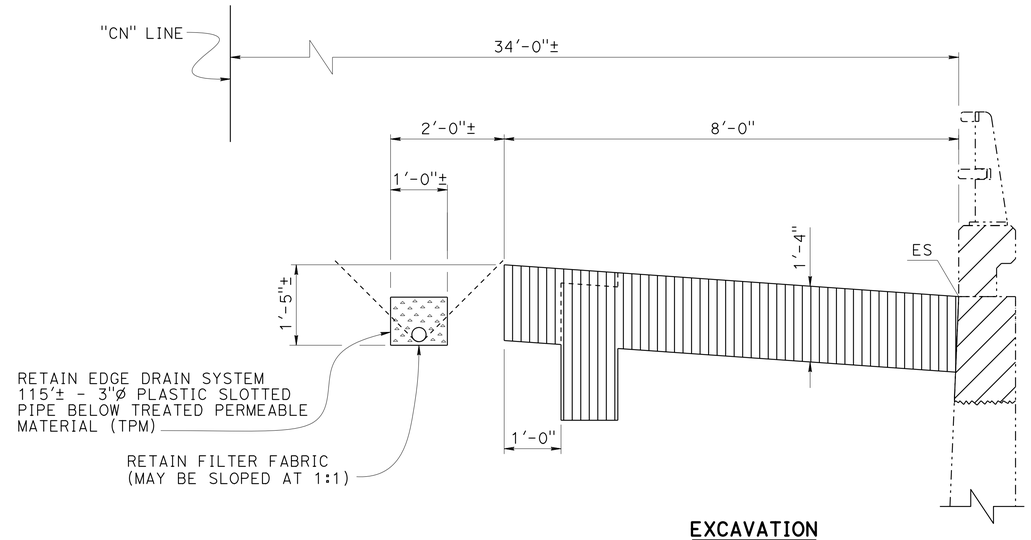

EXCAVATION

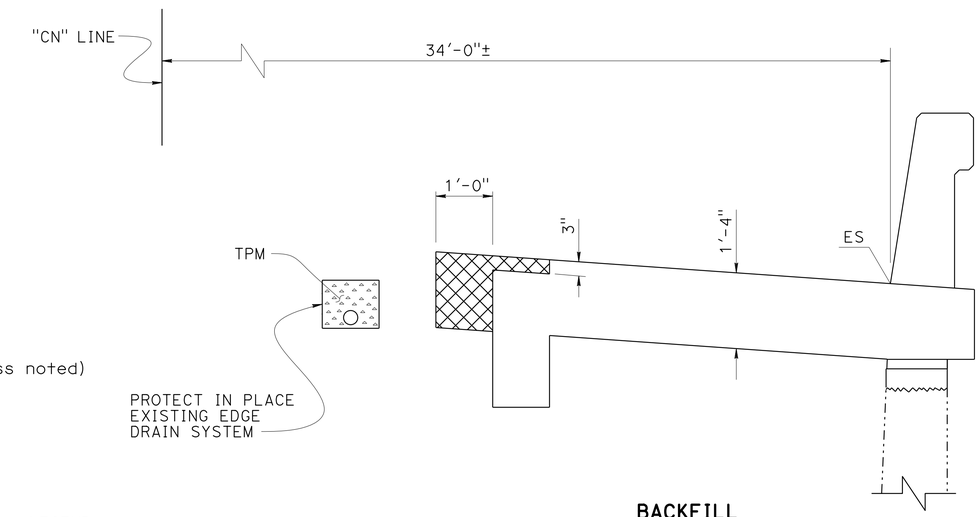

BACKFILL

LEGEND:

- Structure Excavation
- Roadway Materials (See "ROADWAY PLANS")
- Bridge Removal (Portion)
- Treated Permeable Material (TPM)

BARRIER SLAB EARTHWORK

3/4" = 1'-0"

KLAMATH RIVER BRIDGE & SEPARATION — BRIDGE NO. 02-0134R/L

QUANTITIES

SALVAGE METAL BRIDGE RAILING	4,069	LF
PREPARE CONCRETE BRIDGE DECK SURFACE	4,600	SQFT
FURNISH POLYESTER CONCRETE OVERLAY	383	CF
PLACE POLYESTER CONCRETE OVERLAY	4,600	SQFT
CARBON FIBER REINFORCED POLYMER STRIP (DECK)	11,131	LF
BRIDGE REMOVAL (PORTION), LOCATION B	LUMP SUM	
STRUCTURAL CONCRETE, BRIDGE	6	CY
STRUCTURAL CONCRETE, BRIDGE (POLYMER FIBER)	290	CY
STRUCTURAL CONCRETE, BARRIER SLAB	53	CY
AGGREGATE BASE (APPROACH SLAB)	2	CY
STRUCTURAL CONCRETE, APPROACH SLAB (TYPE R)	13	CY
DRILL AND BOND DOWEL	227	LF
CLEAN EXPANSION JOINT	197	LF
NEOPRENE GLAND (WABO STRIP SEAL SE-400)	41	LF
NEOPRENE GLAND (WABO STRIP SEAL SE-500)	122	LF
FABRICATED STRIP SEAL (WABO TYPE m)	4	LF
FABRICATED STRIP SEAL (WABO TYPE R)	4	LF
JOINT SEAL (MR 2")	42	LF
BAR REINFORCING STEEL (EPOXY COATED) (BRIDGE)	96,190	LB
BAR REINFORCING STEEL (STAINLESS STEEL)	1,245	LB
CONCRETE BARRIER (TYPE 736)	4,069	LF

CONCRETE STRENGTH AND TYPE LIMITS

Structural Concrete Bridge (Polymer Fiber) - Deck overhangs

Structural Concrete Bridge - Retaining walls and Corbels

	BY	CHECKED
DESIGN	B. Addlespurger	Doug Menzmer
DETAILS	H. Mauroschadt	Doug Menzmer
QUANTITIES	Jinrong Wang	B. Addlespurger

STATE OF CALIFORNIA DEPARTMENT OF TRANSPORTATION

DIVISION OF ENGINEERING SERVICES STRUCTURE DESIGN — DESIGN BRANCH 12

BRIDGE NO. 02-0134R/L — POST MILE R 58.2

KLAMATH RIVER BRIDGE & SEPARATION
INDEX TO PLANS

STRUCTURES DESIGN DETAIL SHEET (ENGLISH) (REV. 09-01-10)

ORIGINAL SCALE IN INCHES FOR REDUCED PLANS 0 1 2 3

UNIT: 3606
PROJECT NUMBER & PHASE: 0215000021
CONTRACT NO.: 02-4F58U

DISREGARD PRINTS BEARING EARLIER REVISION DATES — REVISION DATES 11-20-15 1-29-16 6-2-16

SHEET 2 OF 11

FILE => 02-0134rl-b-itp.dgn

USERNAME => S123119 DATE PLOTTED => 21-JUN-2016 TIME PLOTTED => 13:59

DIST	COUNTY	ROUTE	POST MILES TOTAL PROJECT	SHEET No.	TOTAL SHEETS
02	Sis	5	R57.8/R58.8	91	106

REGISTERED CIVIL ENGINEER — DATE: 6-9-16

PLANS APPROVAL DATE: 06-15-16

REGISTERED PROFESSIONAL ENGINEER — William W Addlespurger — No. 50697 — Exp. 09-30-17 — CIVIL — STATE OF CALIFORNIA

The State of California or its officers or agents shall not be responsible for the accuracy or completeness of scanned copies of this plan sheet.

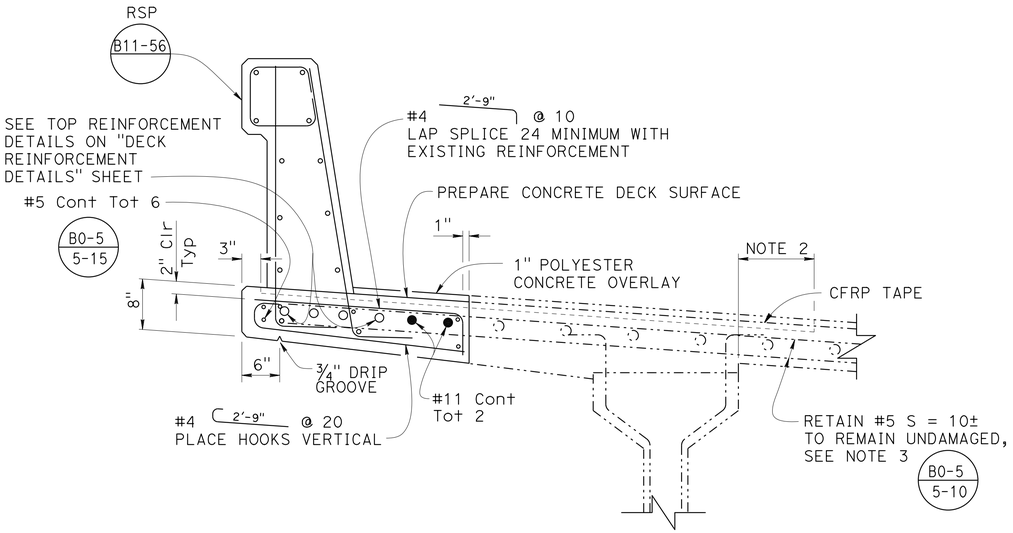

CONSTRUCTION

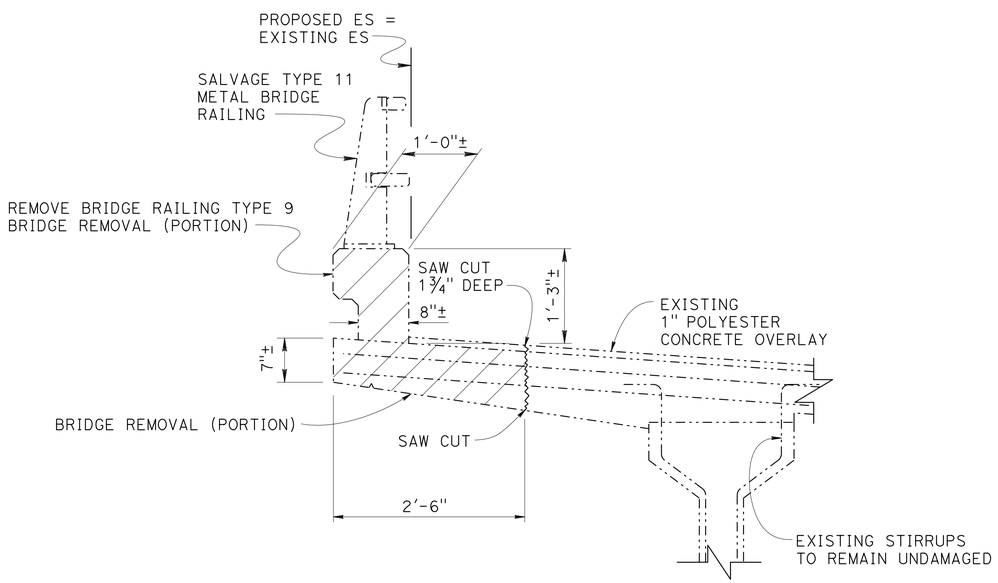

REMOVAL

HIGH SIDE

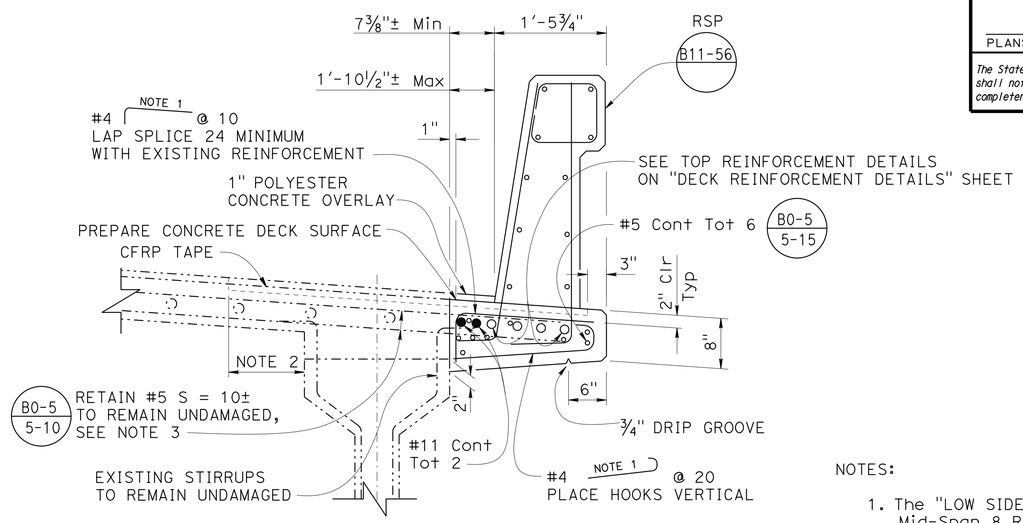

CONSTRUCTION

NOTES:

1. The "LOW SIDE" overhang widths vary. Mid-Span 8 Right Bridge shown for extreme conditions, other Spans similar.
2. See "CFRP LAYOUT" sheet for layout and details.
3. Existing longitudinal reinforcement near the saw cut must be removed as directed by the Engineer.

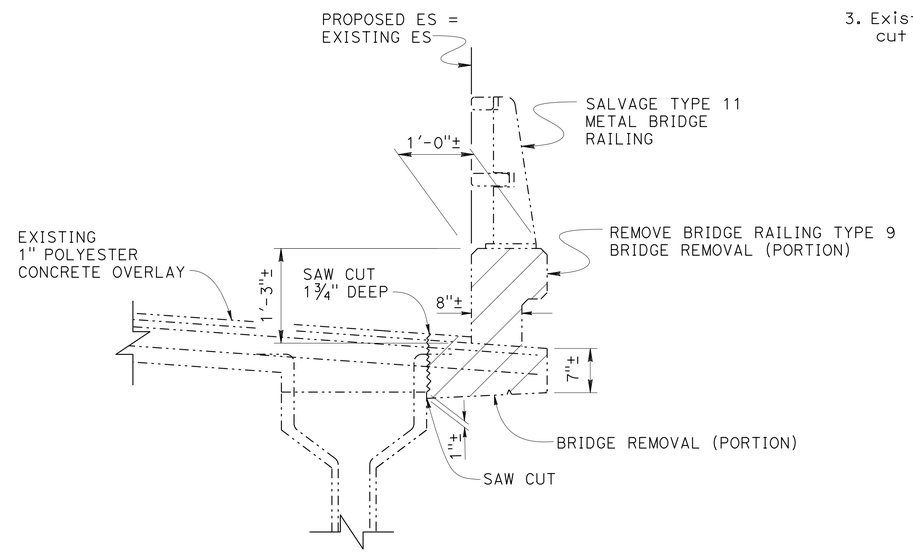

REMOVAL

LOW SIDE

NOTE:
THE CONTRACTOR MUST VERIFY ALL CONTROLLING FIELD DIMENSIONS BEFORE ORDERING OR FABRICATING ANY MATERIAL.

PART TYPICAL SECTION

1" = 1'-0"

	BY	CHECKED
DESIGN	Bill Addlespurger	Doug Menzmer
DETAILS	Herman Mauroschadt	Doug Menzmer
QUANTITIES	Jinrong Wang	Bill Addlespurger

STATE OF CALIFORNIA — DEPARTMENT OF TRANSPORTATION

DIVISION OF ENGINEERING SERVICES — STRUCTURE DESIGN — DESIGN BRANCH 12

BRIDGE NO. 02-0134R/L — POST MILE R 58.2

KLAMATH RIVER BRIDGE & SEPARATION

TYPICAL SECTION

STRUCTURES DESIGN DETAIL SHEET (ENGLISH) (REV. 09-01-10)

ORIGINAL SCALE IN INCHES FOR REDUCED PLANS 0 1 2 3

UNIT: 3606
PROJECT NUMBER & PHASE: 0215000021
CONTRACT NO.: 02-4F58U

DISREGARD PRINTS BEARING EARLIER REVISION DATES → REVISION DATES 11-30-15 2-29-16 3-17-16

SHEET 3 OF 11

FILE => 02-0134rl-c-typ.dgn

USERNAME => S123119 DATE PLOTTED => 21-JUN-2016 TIME PLOTTED => 13:59

DIST	COUNTY	ROUTE	POST MILES TOTAL PROJECT	SHEET No.	TOTAL SHEETS
02	Sis	5	R57.8/R58.8	92	106

REGISTERED CIVIL ENGINEER — DATE: 6-9-16

06-15-16
PLANS APPROVAL DATE

REGISTERED PROFESSIONAL ENGINEER — William W Addlespurger — No. 50697 — Exp. 09-30-17 — CIVIL — STATE OF CALIFORNIA

The State of California or its officers or agents shall not be responsible for the accuracy or completeness of scanned copies of this plan sheet.

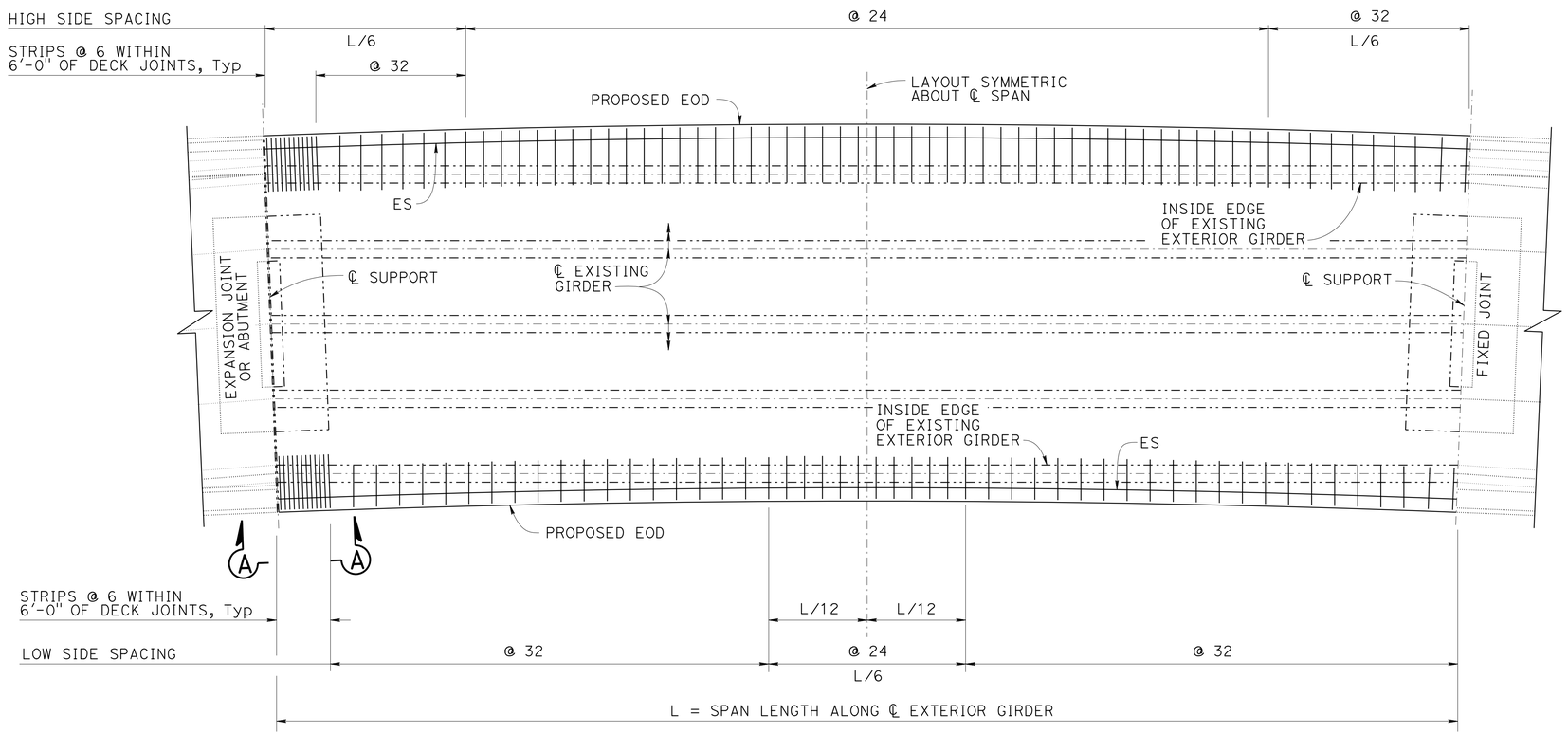

CFRP LAYOUT

NO SCALE

NOTES:

1. Space CFRP normal to ℄ Girder, except within 6'-0" of ℄ Supports, where CFRP shall be placed parallel to ℄ Supports.
2. "VIEW A-A" applies for the general case but shown at expansion joint for clarity. Layout may be adjusted as approved by the Engineer.
3. CFRP to be 6'-0" length within 6'-0" of all deck expansion joints on both sides, and the entire high side of the bridge. CFRP to be 4'-8" on the low side of the bridge.
4. If bar is chosen rather than tape, lengths of all CFRP shall be increased 4" towards the interior of the bridge.
5. Right Bridge shown, Left Bridge similar.
6. Unsound concrete shall be repaired if found at areas where CFRP is to be placed.

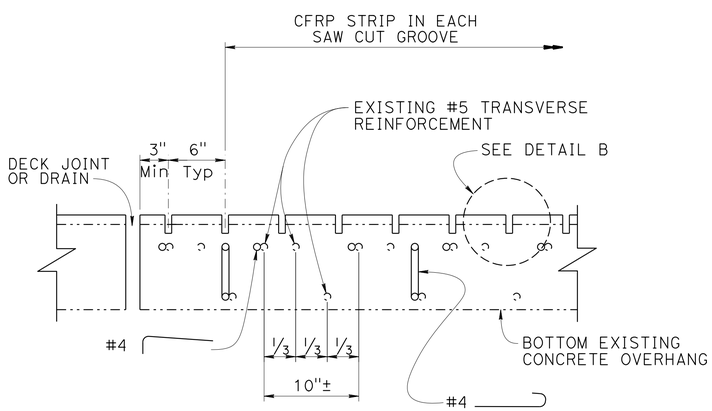

VIEW A-A

1½" = 1'-0"

NOTE:
THE CONTRACTOR MUST VERIFY ALL CONTROLLING FIELD DIMENSIONS BEFORE ORDERING OR FABRICATING ANY MATERIAL.

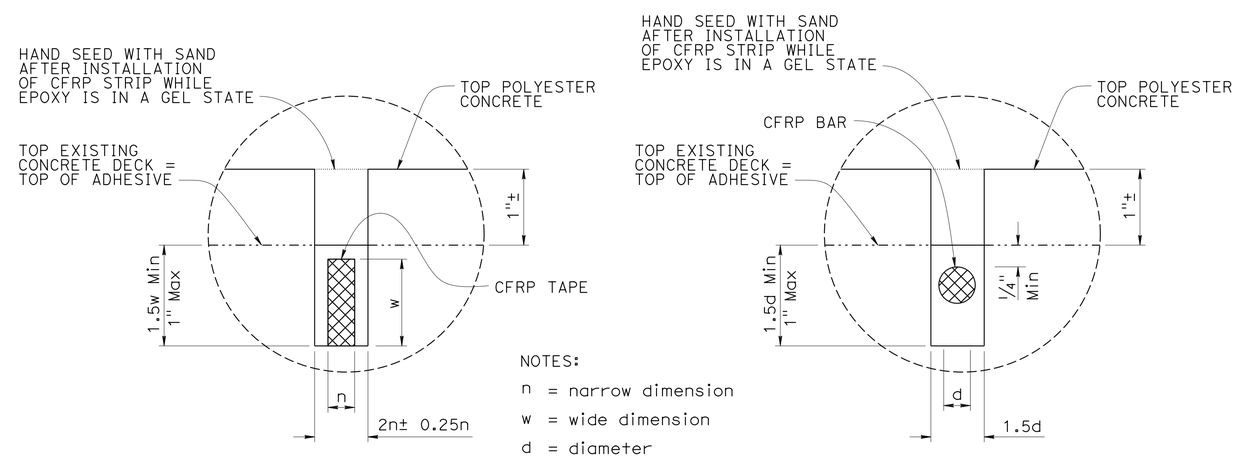

NOTES:

n = narrow dimension

w = wide dimension

d = diameter

Area ≥ 0.11 in²

CFRP STRIPS (DECK)

DETAIL B

NO SCALE

DESIGN	BY Bill Addlespurger	CHECKED Doug Menzmer	
DETAILS	BY Herman Mauroschadt	CHECKED Doug Menzmer	
QUANTITIES	BY Jinrong Wang	CHECKED Bill Addlespurger	

STATE OF CALIFORNIA
DEPARTMENT OF TRANSPORTATION

DIVISION OF ENGINEERING SERVICES
STRUCTURE DESIGN
DESIGN BRANCH 12

BRIDGE NO. 02-0134R/L
POST MILE R 58.2

KLAMATH RIVER BRIDGE & SEPARATION
CFRP LAYOUT

STRUCTURES DESIGN DETAIL SHEET (ENGLISH) (REV. 09-01-10)

ORIGINAL SCALE IN INCHES FOR REDUCED PLANS 0 1 2 3

UNIT: 3606
PROJECT NUMBER & PHASE: 0215000021
CONTRACT NO.: 02-4F58U

DISREGARD PRINTS BEARING EARLIER REVISION DATES

REVISION DATES 11-30-15 1-15-16 3-17-16

SHEET 4 OF 11

FILE => 02-0134rl-d-cfrplo.dgn

USERNAME => S123119 DATE PLOTTED => 21-JUN-2016 TIME PLOTTED => 13:59

DIST	COUNTY	ROUTE	POST MILES TOTAL PROJECT	SHEET No.	TOTAL SHEETS
02	Sis	5	R57.8/R58.8	93	106

REGISTERED CIVIL ENGINEER — DATE: 6-9-16

06-15-16
PLANS APPROVAL DATE

REGISTERED PROFESSIONAL ENGINEER — William W Addlespurger — No. 50697 — Exp. 09-30-17 — CIVIL — STATE OF CALIFORNIA

The State of California or its officers or agents shall not be responsible for the accuracy or completeness of scanned copies of this plan sheet.

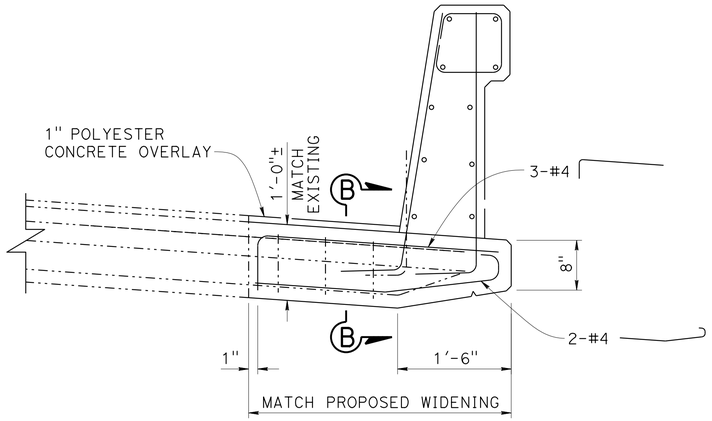

CONSTRUCTION

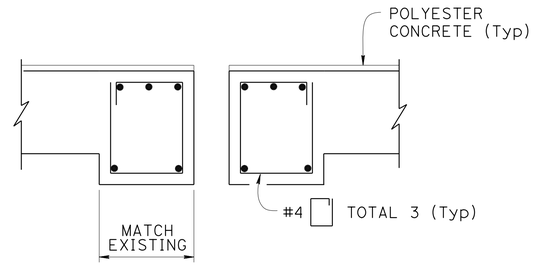

SECTION B-B
NO SCALE

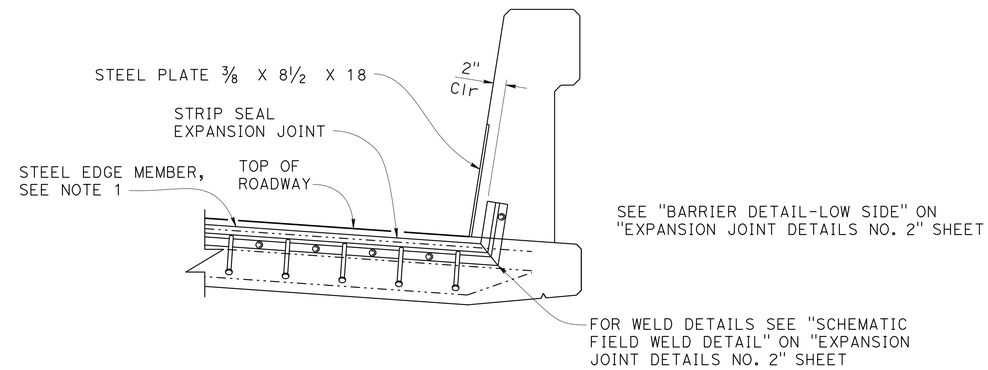

CONSTRUCTION OF JOINT SEAL ASSEMBLY

NOTES:
1. For Steel edge member type, (to be replaced on low side only) see "JOINT INFORMATION" Table on "EXPANSION JOINT DETAILS NO. 2" sheet.
2. Left Bridge neoprene seals to be replaced full width. Right Bridge neoprene seals to be replaced full width. See "JOINT INFORMATION" Table on "EXPANSION JOINT DETAILS NO. 2" sheet.
3. Low Side shown, High Side similar. There is no Steel Edge upturn on High Side.

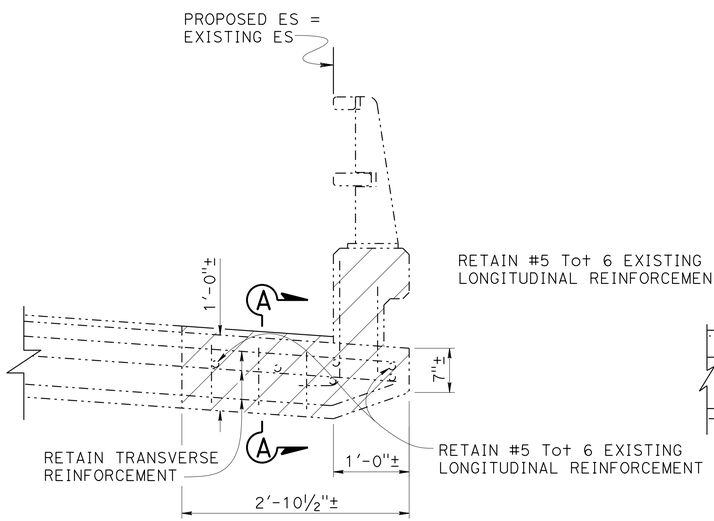

REMOVAL

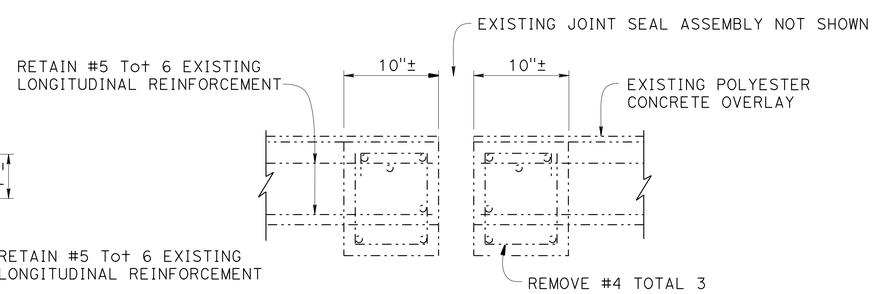

SECTION A-A
NO SCALE

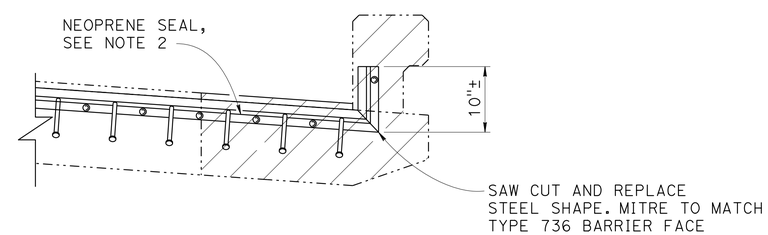

REMOVAL

LOW SIDE BARRIER UP-TURN DETAIL
NO SCALE

NOTE:
THE CONTRACTOR MUST VERIFY ALL CONTROLLING FIELD DIMENSIONS BEFORE ORDERING OR FABRICATING ANY MATERIAL.

	BY	CHECKED
DESIGN	B. Addlespurger	D. Menzmer
DETAILS	H. Mauroschadt	D. Menzmer
QUANTITIES	J. Wang	B. Addlespurger

STATE OF CALIFORNIA
DEPARTMENT OF TRANSPORTATION

DIVISION OF ENGINEERING SERVICES
STRUCTURE DESIGN
DESIGN BRANCH 12

BRIDGE NO. 02-0134R/L
POST MILE R 58.2

KLAMATH RIVER BRIDGE & SEPARATION
EXPANSION JOINT DETAILS NO. 1

STRUCTURES DESIGN DETAIL SHEET (ENGLISH) (REV. 09-01-10)

ORIGINAL SCALE IN INCHES FOR REDUCED PLANS 0 1 2 3

UNIT: 3606
PROJECT NUMBER & PHASE: 0215000021
CONTRACT NO.: 02-4F58U

DISREGARD PRINTS BEARING EARLIER REVISION DATES

REVISION DATES: 12-11-15 | 3-1-16 | 3-23-16

SHEET 5 OF 11

FILE => 02-0134rl-d-ejdet01.dgn

USERNAME => S123119 DATE PLOTTED => 21-JUN-2016 TIME PLOTTED => 13:59

NOTE:

Insert assembly or expansion anchorage for 5/8" x 1 3/4" bolts. Use installation bolts extended 1/2" minimum past nut and coat with bond breaker, after concrete has cured, remove installation bolts, install HS bolts and sheet neoprene.

JOINT INFORMATION											
BRIDGE NUMBER	LOCATION	MOVEMENT RATING (MR)	LENGTH CLEAN EXPANSION JOINT	LENGTH NEOPRENE	AS-BUILT MATERIAL		"g" DIMENSIONS				
					SEAL SIZE	EDGE MEMBER	-15 F	16 F	48 F	79 F	110 F
02-0134R	BENT 4	4 1/2"	41'-0"	40'-6"	WABO SE 500	TYPE "R"	5	3 3/4	2 3/4	1 1/2	1/2
	BENT 7	3 1/4"	41'-0"	40'-6"	WABO SE 500		3 3/4	3 1/4	2	1 1/4	1/2
	Abut 10	2"	32'-6"								
02-0134L	BENT 4	4 1/4"	41'-0"*	40'-6"	WABO SE 500	TYPE "M"	4 1/2	3 1/2	2 1/2	1 1/2	1/2
	BENT 7	3 3/4"	41'-0"*	40'-6"	WABO SE 400		4	3 1/4	2 1/4	1 1/2	1/2

* Protect existing waterstop

DIST	COUNTY	ROUTE	POST MILES TOTAL PROJECT	SHEET No.	TOTAL SHEETS
02	Sis	5	R57.8/R58.8	94	106

REGISTERED CIVIL ENGINEER — DATE 6-9-16

PLANS APPROVAL DATE 06-15-16

REGISTERED PROFESSIONAL ENGINEER — William W Addlespurger No. 50697 Exp. 09-30-17 CIVIL — STATE OF CALIFORNIA

The State of California or its officers or agents shall not be responsible for the accuracy or completeness of scanned copies of this plan sheet.

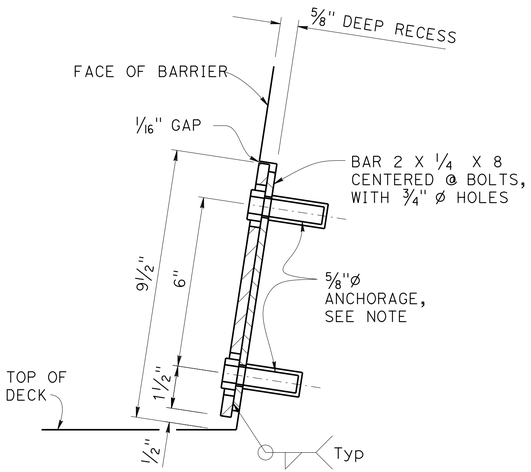

SECTION D-D

NO SCALE

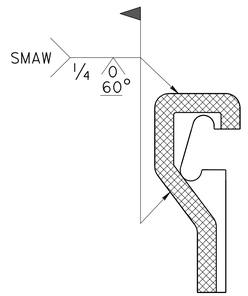

SCHEMATIC FIELD WELD DETAIL

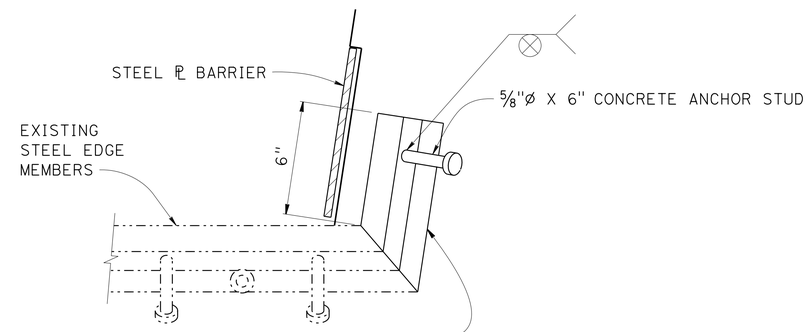

BARRIER DETAIL-LOW SIDE

NO SCALE

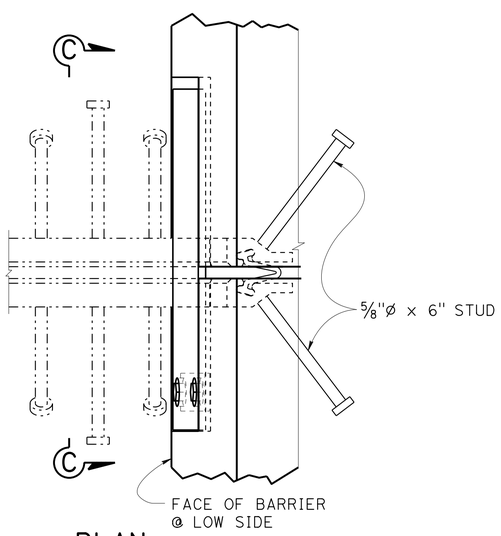

PLAN

NO SCALE

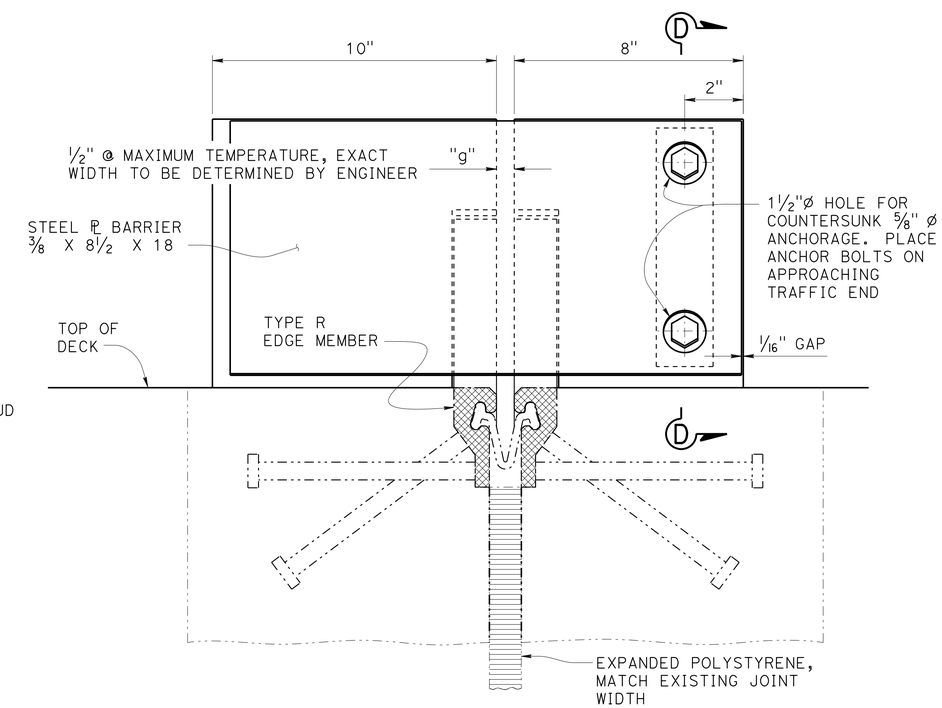

VIEW C-C (RIGHT BRIDGE)

NO SCALE

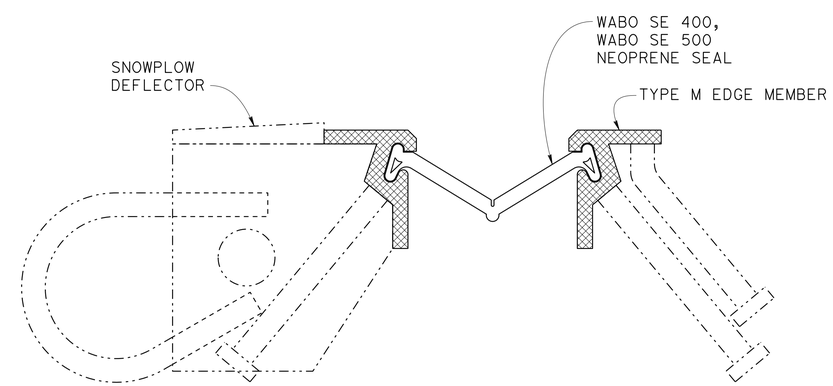

(FOR DETAILS NOT SHOWN SEE "VIEW C-C" RIGHT BRIDGE)

VIEW C-C (LEFT BRIDGE)

NO SCALE

NOTE:
THE CONTRACTOR MUST VERIFY ALL CONTROLLING FIELD DIMENSIONS BEFORE ORDERING OR FABRICATING ANY MATERIAL.

	BY	CHECKED
DESIGN	B. Addlespurger	Doug Menzmer
DETAILS	H. Mauroschadt	Doug Menzmer
QUANTITIES	Jinrong Wang	B. Addlespurger

STATE OF CALIFORNIA DEPARTMENT OF TRANSPORTATION

DIVISION OF ENGINEERING SERVICES STRUCTURE DESIGN DESIGN BRANCH 12

BRIDGE NO. 02-0134R/L POST MILE R 58.2

KLAMATH RIVER BRIDGE & SEPARATION EXPANSION JOINT DETAILS NO. 2

STRUCTURES DESIGN DETAIL SHEET (ENGLISH) (REV. 09-01-10)

ORIGINAL SCALE IN INCHES FOR REDUCED PLANS 0 1 2 3

UNIT: 3606
PROJECT NUMBER & PHASE: 0215000021
CONTRACT NO.: 02-4F58U

DISREGARD PRINTS BEARING EARLIER REVISION DATES — REVISION DATES 12-21-15 1-22-16 3-29-16

SHEET 6 OF 11

FILE => 02-0134rl-d-ejdet02.dgn

USERNAME => S123119 DATE PLOTTED => 21-JUN-2016 TIME PLOTTED => 14:00

DIST	COUNTY	ROUTE	POST MILES TOTAL PROJECT	SHEET No.	TOTAL SHEETS
02	Sis	5	R57.8/R58.8	95	106

REGISTERED CIVIL ENGINEER — DATE 6-9-16

06-15-16
PLANS APPROVAL DATE

The State of California or its officers or agents shall not be responsible for the accuracy or completeness of scanned copies of this plan sheet.

REGISTERED PROFESSIONAL ENGINEER — William W Addlespurger — No. 50697 — Exp. 09-30-17 — CIVIL — STATE OF CALIFORNIA

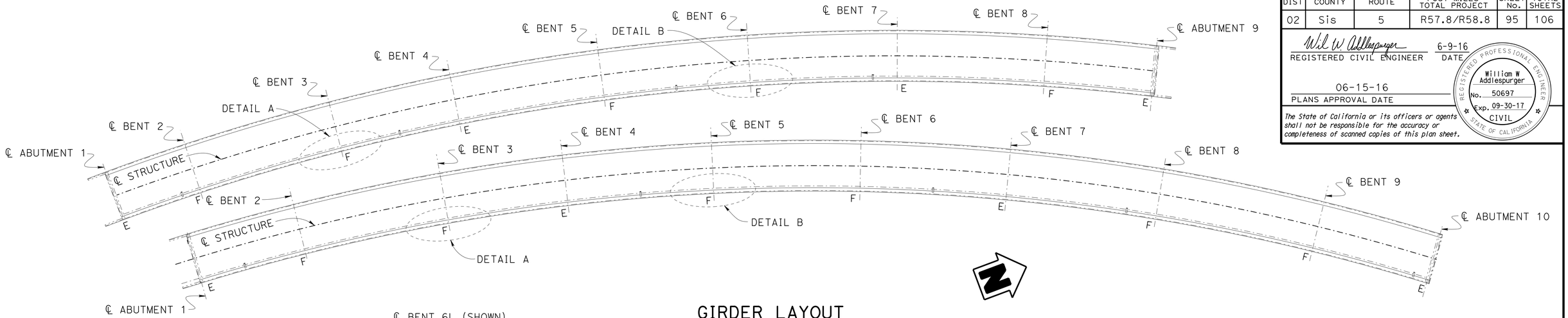

GIRDER LAYOUT

1" = 40'-0"

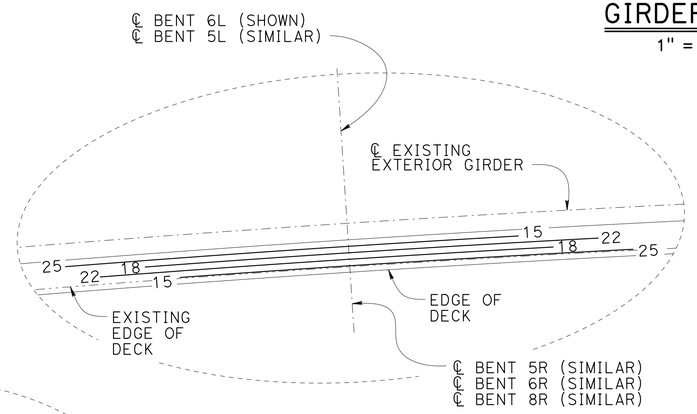

NOTE:
Reinforcement is symmetric about ℄ Structure

DETAIL B

1" = 10'-0"

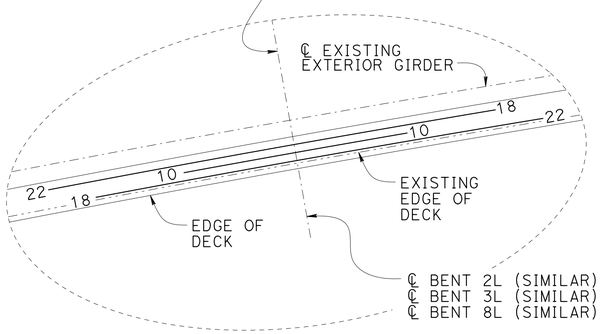

NOTE:
Reinforcement is symmetric about ℄ Structure

DETAIL A

1" = 10'-0"

NOTES:

1. All reinforcement shown are #11 bars.
2. Number at ends of bars indicates the distance from ℄ Bent
3. Bars must be bundled to provide 3½" Minimum Clearance if required for congested spacing.
4. End of bars obstructed by deck drains to be relocated as approved by the Engineer.
5. Deck overhang remove and replace shown on "TYPICAL SECTION" sheet.

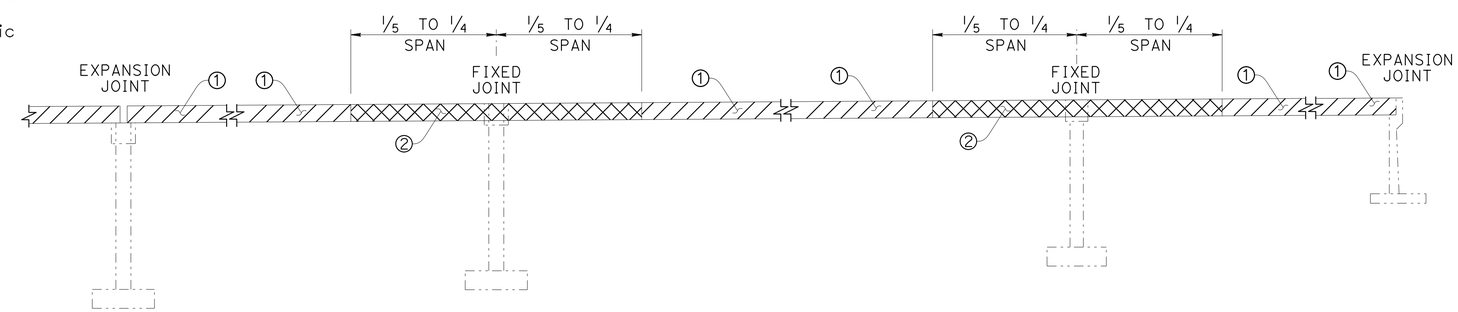

POUR SEQUENCE

NO SCALE

NOTE:

Pours No. 1 and No. 2 may be placed continuously between expansion joints as approved by the Engineer.

LEGEND:

- Indicates Initial Concrete Pour
- Indicates Secondary Concrete Pour
- E — Indicates Expansion Joint
- F — Indicates Fixed Joint

NOTE:
THE CONTRACTOR MUST VERIFY ALL CONTROLLING FIELD DIMENSIONS BEFORE ORDERING OR FABRICATING ANY MATERIAL.

	BY	CHECKED
DESIGN	B. Addlespurger	D. Menzmer
DETAILS	H. Mauroschadt	D. Menzmer
QUANTITIES	J. Wang	B. Addlespurger

STATE OF CALIFORNIA
DEPARTMENT OF TRANSPORTATION

DIVISION OF ENGINEERING SERVICES
STRUCTURE DESIGN
DESIGN BRANCH 12

BRIDGE NO. 02-0134R/L
POST MILE R 58.2

KLAMATH RIVER BRIDGE & SEPARATION
DECK REINFORCEMENT DETAILS

STRUCTURES DESIGN DETAIL SHEET (ENGLISH) (REV. 09-01-10)

ORIGINAL SCALE IN INCHES FOR REDUCED PLANS 0 1 2 3

UNIT: 3606
PROJECT NUMBER & PHASE: 0215000021
CONTRACT NO.: 02-4F58U

DISREGARD PRINTS BEARING EARLIER REVISION DATES
REVISION DATES 11-30-15 2-26-16

SHEET 7 OF 11

FILE => 02-0134rl-e-dreinfdet.dgn

USERNAME => s123119 DATE PLOTTED => 21-JUN-2016 TIME PLOTTED => 14:00

DIST	COUNTY	ROUTE	POST MILES TOTAL PROJECT	SHEET No.	TOTAL SHEETS
02	Sis	5	R57.8/R58.8	96	106

REGISTERED CIVIL ENGINEER — DATE: 6-9-16

PLANS APPROVAL DATE: 06-15-16

REGISTERED PROFESSIONAL ENGINEER — William W Addlespurger — No. 50697 — Exp. 09-30-17 — CIVIL — STATE OF CALIFORNIA

The State of California or its officers or agents shall not be responsible for the accuracy or completeness of scanned copies of this plan sheet.

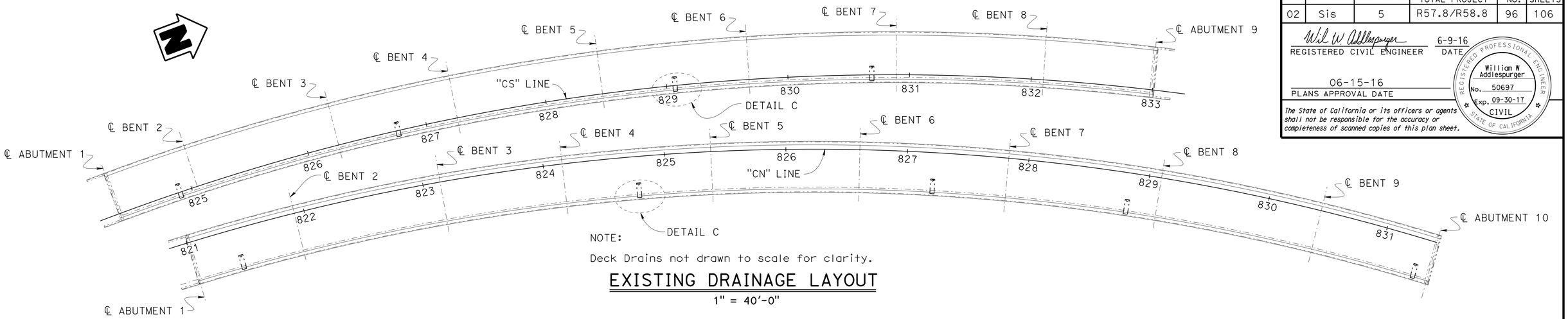

NOTE:

Deck Drains not drawn to scale for clarity.

EXISTING DRAINAGE LAYOUT

1" = 40'-0"

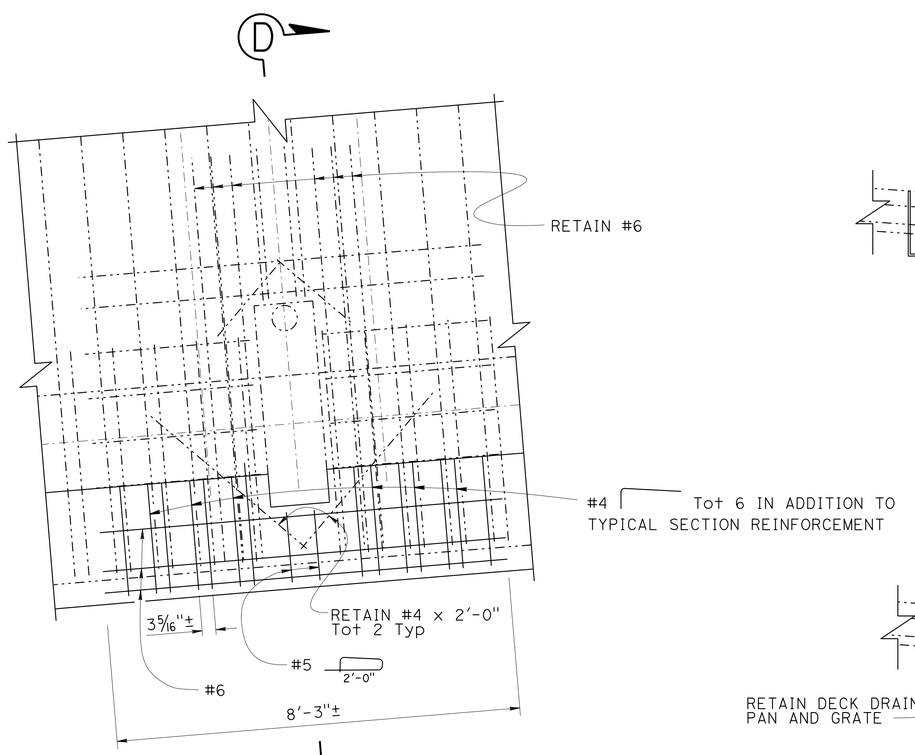

DETAIL C

1/2" = 1'-0"

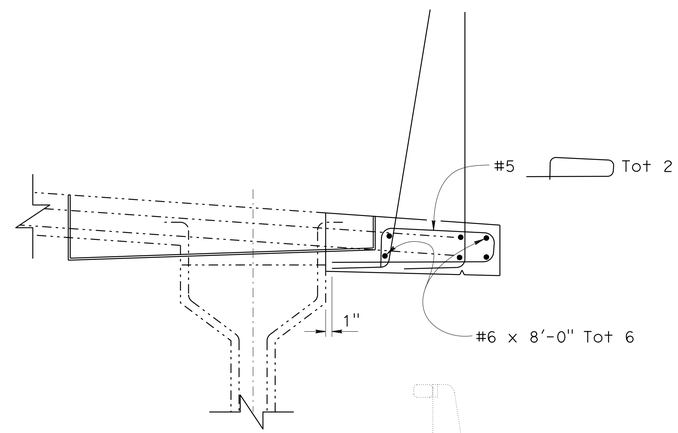

CONSTRUCTION

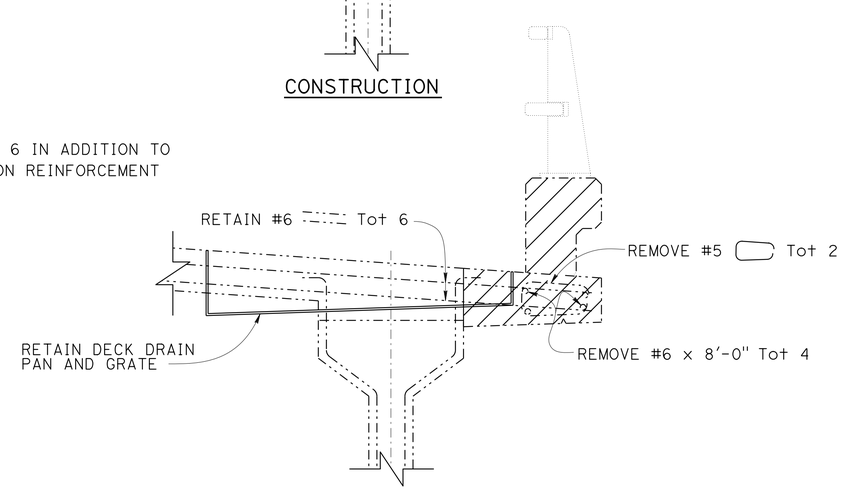

REMOVAL

VIEW D-D

1" = 1'-0"

LOCATION	STATION
LEFT BRIDGE	824+90±
	826+76±
	829+07±
	830+69±
RIGHT BRIDGE	821+40±
	824+77±
	827+22±
	828+85±
	831+38±

NOTE:

Locations listed for "LEFT BRIDGE" are measured along "CS LINE". Locations listed for "RIGHT BRIDGE" are measured along "CN LINE".

LEGEND:

Indicates Existing Drain

Bridge Removal (Portion)

NOTE:
THE CONTRACTOR MUST VERIFY ALL CONTROLLING FIELD DIMENSIONS BEFORE ORDERING OR FABRICATING ANY MATERIAL.

	BY	CHECKED
DESIGN	B. Addlespurger	D. Menzmer
DETAILS	H. Mauroschadt	D. Menzmer
QUANTITIES	J. Wang	B. Addlespurger

STATE OF CALIFORNIA
DEPARTMENT OF TRANSPORTATION

DIVISION OF ENGINEERING SERVICES
STRUCTURE DESIGN
DESIGN BRANCH 12

BRIDGE NO. 02-0134R/L
POST MILE R 58.2

KLAMATH RIVER BRIDGE & SEPARATION
DECK DRAIN DETAILS

STRUCTURES DESIGN DETAIL SHEET (ENGLISH) (REV. 09-01-10)

ORIGINAL SCALE IN INCHES FOR REDUCED PLANS 0 1 2 3

UNIT: 3606
PROJECT NUMBER & PHASE: 0215000021
CONTRACT NO.: 02-4F58U

DISREGARD PRINTS BEARING EARLIER REVISION DATES

REVISION DATES: 11-16-15 6-9-16 2-26-16

SHEET 8 OF 11

FILE => 02-0134rl-f-dd.dgn

USERNAME => S123119 DATE PLOTTED => 21-JUN-2016 TIME PLOTTED => 14:00

DIST	COUNTY	ROUTE	POST MILES TOTAL PROJECT	SHEET No.	TOTAL SHEETS
02	Sis	5	R57.8/R58.8	97	106

REGISTERED CIVIL ENGINEER — DATE 6-9-16

PLANS APPROVAL DATE 06-15-16

REGISTERED PROFESSIONAL ENGINEER — William W Addlespurger — No. 50697 — Exp. 09-30-17 — CIVIL — STATE OF CALIFORNIA

The State of California or its officers or agents shall not be responsible for the accuracy or completeness of scanned copies of this plan sheet.

NOTES:

1. Dimensions will vary with cross slope.
2. See "ROADWAY PLANS" for Guard Rail connection to Barrier.
3. See "GENERAL PLAN" sheet for limits of construction.
4. See "TYPICAL SECTION" sheet for Barrier Details on Bridge.
5. For "SECTION D-D" see "BARRIER DETAILS NO. 2" sheet.
6. For "SECTION F-F", "SECTION G-G" and "SECTION H-H" see "BARRIER DETAILS NO. 3" sheet.
7. Corbel details are continuous from end of Wing Wall to EB for Abutments 9 and 10 and to Abutment face for Abutments 1. Notes and dimensions shown individually in "SECTION A-A", "SECTION B-B" and "SECTION C-C" apply to the Wing Wall set.

LEGEND:

Indicates Bridge Removal (Portion): Concrete End Block, Transition Anchor Block, Barrier and portion of Retaining Wall.

Indicates Existing Structure

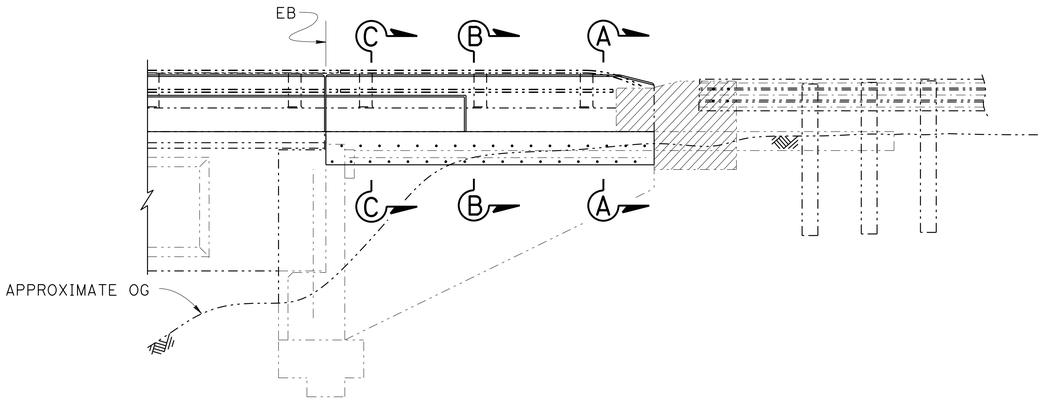

ABUTMENT 9 RIGHT EXTERIOR WING WALL ELEVATION

1/4" = 1'-0"

NOTE:
Seat Type and Diapragm Abutments differ, all eight Wing walls to be reworked.

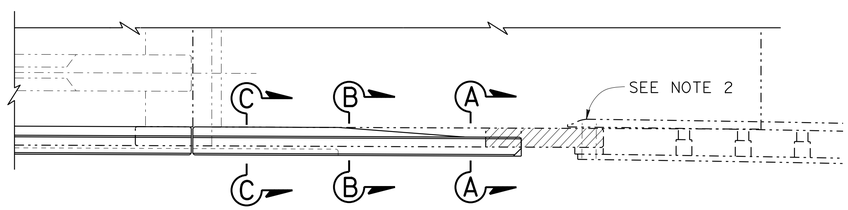

ABUTMENT PART PLAN

1/4" = 1'-0"

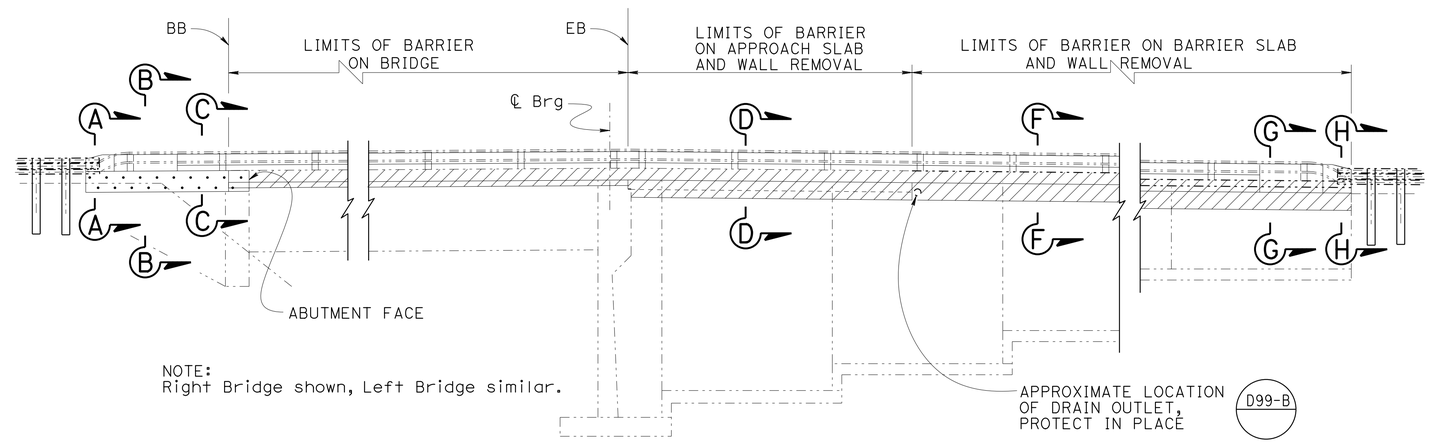

NOTE:
Right Bridge shown, Left Bridge similar.

DEVELOPED ELEVATION

1/8" = 1'-0"

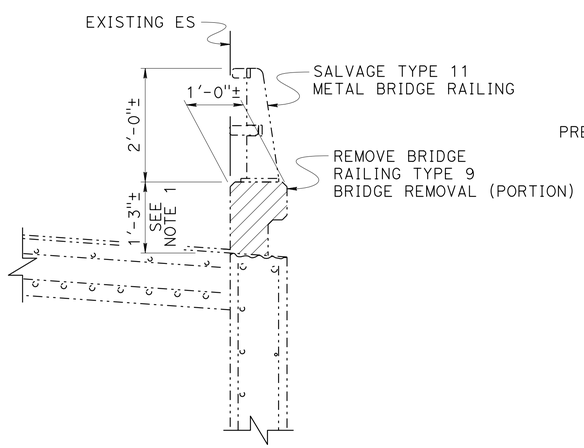

REMOVAL

3/4" = 1'-0"

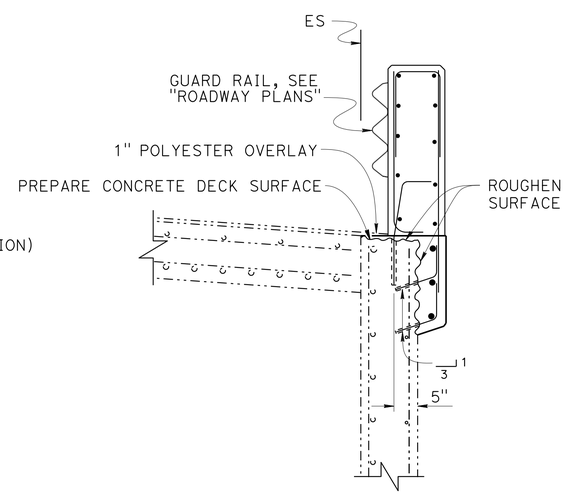

SECTION A-A

3/4" = 1'-0"

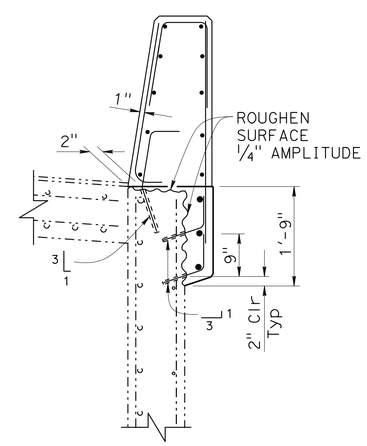

SECTION B-B

3/4" = 1'-0"

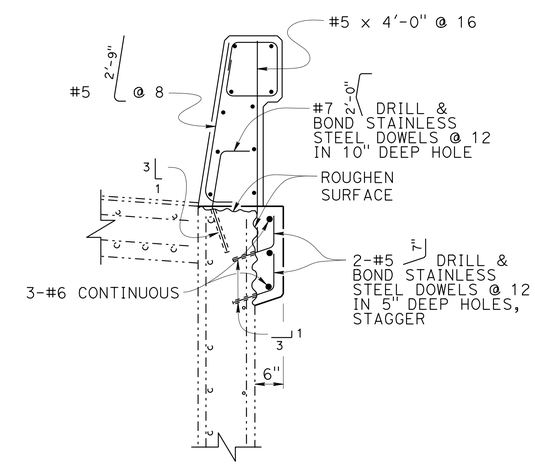

SECTION C-C

3/4" = 1'-0"

NOTE:
THE CONTRACTOR MUST VERIFY ALL CONTROLLING FIELD DIMENSIONS BEFORE ORDERING OR FABRICATING ANY MATERIAL.

	BY	CHECKED
DESIGN	B. Addlespurger	P. Mak
DETAILS	H. Mauroschadt	D. Menzmer
QUANTITIES	J. Wang	B. Addlespurger

STATE OF CALIFORNIA
DEPARTMENT OF TRANSPORTATION

DIVISION OF ENGINEERING SERVICES
STRUCTURE DESIGN
DESIGN BRANCH 12

BRIDGE NO. 02-0134R/L
POST MILE R 58.2

KLAMATH RIVER BRIDGE & SEPARATION
BARRIER DETAILS NO. 1

STRUCTURES DESIGN DETAIL SHEET (ENGLISH) (REV. 09-01-10)

ORIGINAL SCALE IN INCHES FOR REDUCED PLANS 0 1 2 3

UNIT: 3606
PROJECT NUMBER & PHASE: 0215000021
CONTRACT NO.: 02-4F58U

DISREGARD PRINTS BEARING EARLIER REVISION DATES

REVISION DATES: 11-30-15 | 3-17-16 | 3-23-16

SHEET 9 OF 11

FILE => 02-0134r1-g-bsdet01.dgn

USERNAME => s123119 DATE PLOTTED => 21-JUN-2016 TIME PLOTTED => 14:00

DIST	COUNTY	ROUTE	POST MILES TOTAL PROJECT	SHEET No.	TOTAL SHEETS
02	Sis	5	R57.8/R58.8	98	106

REGISTERED CIVIL ENGINEER — DATE 6-9-16

06-15-16
PLANS APPROVAL DATE

REGISTERED PROFESSIONAL ENGINEER — William W Addlespurger — No. 50697 — Exp. 09-30-17 — CIVIL — STATE OF CALIFORNIA

The State of California or its officers or agents shall not be responsible for the accuracy or completeness of scanned copies of this plan sheet.

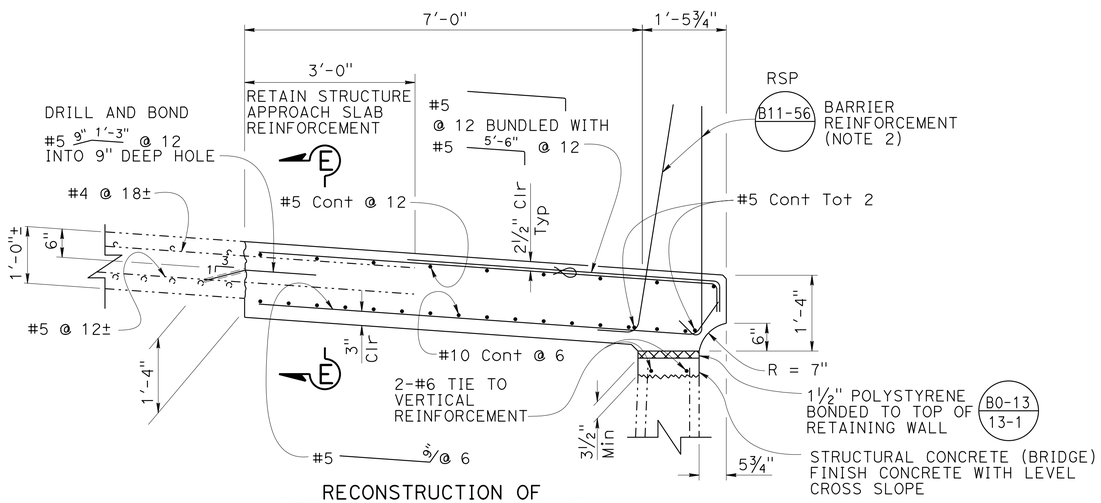

RECONSTRUCTION OF STRUCTURE APPROACH SLAB

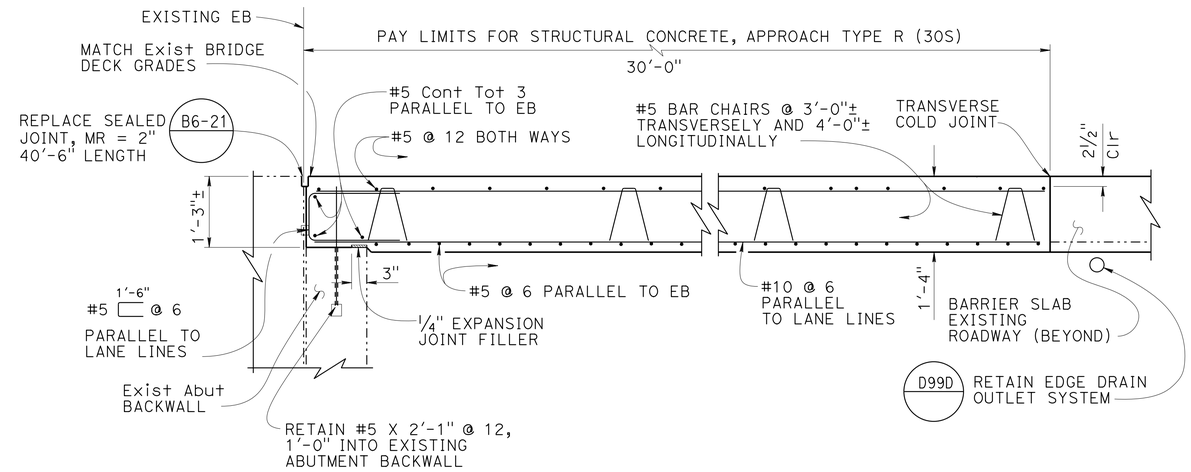

VIEW E-E

¾" = 1'-0"

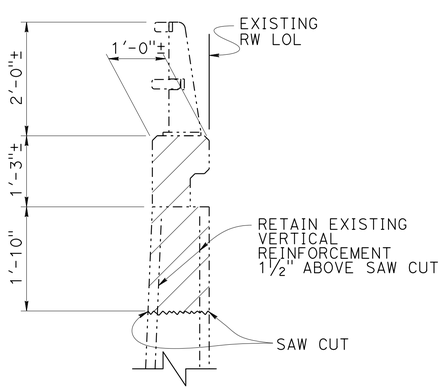

REMOVAL

SECTION D-D

¾" = 1'-0"

NOTES:

1. See "GENERAL PLAN" and "BARRIER DETAILS NO. 1" sheets for limits of construction.
2. Not all Barrier reinforcement shown.
3. At all Barrier Slab Joints for a distance of 5 feet on either side of an expansion joint in the barrier rail provide 5-#5 5'-6" @ 12 stagger with bundled bars.

LEGEND:

- Indicates Bridge Removal (Portion)
- Indicates Existing Structure
- Indicates Polystyrene

NOTE:
THE CONTRACTOR MUST VERIFY ALL CONTROLLING FIELD DIMENSIONS BEFORE ORDERING OR FABRICATING ANY MATERIAL.

	BY	CHECKED
DESIGN	B. Addlespurger	D. Menzmer
DETAILS	H. Mauroschadt	D. Menzmer
QUANTITIES	J. Wang	B. Addlespurger

STATE OF CALIFORNIA
DEPARTMENT OF TRANSPORTATION

DIVISION OF ENGINEERING SERVICES
STRUCTURE DESIGN
DESIGN BRANCH 12

BRIDGE NO. 02-0134R/L
POST MILE R 58.2

KLAMATH RIVER BRIDGE & SEPARATION
BARRIER DETAILS NO. 2

STRUCTURES DESIGN DETAIL SHEET (ENGLISH) (REV. 09-01-10)

ORIGINAL SCALE IN INCHES FOR REDUCED PLANS 0 1 2 3

UNIT: 3606
PROJECT NUMBER & PHASE: 0215000021
CONTRACT NO.: 02-4F58U

DISREGARD PRINTS BEARING EARLIER REVISION DATES

REVISION DATES: 11-20-15 1-19-16 1-26-16 2-26-16

SHEET 10 OF 11

FILE => 02-0134rl-g-bsdet02.dgn

USERNAME => S123119 DATE PLOTTED => 21-JUN-2016 TIME PLOTTED => 14:00

DIST	COUNTY	ROUTE	POST MILES TOTAL PROJECT	SHEET No.	TOTAL SHEETS
02	Sis	5	R57.8/R58.8	99	106

REGISTERED CIVIL ENGINEER — DATE 6-9-16

PLANS APPROVAL DATE 06-15-16

REGISTERED PROFESSIONAL ENGINEER — William W Addlespurger — No. 50697 — Exp. 09-30-17 — CIVIL — STATE OF CALIFORNIA

The State of California or its officers or agents shall not be responsible for the accuracy or completeness of scanned copies of this plan sheet.

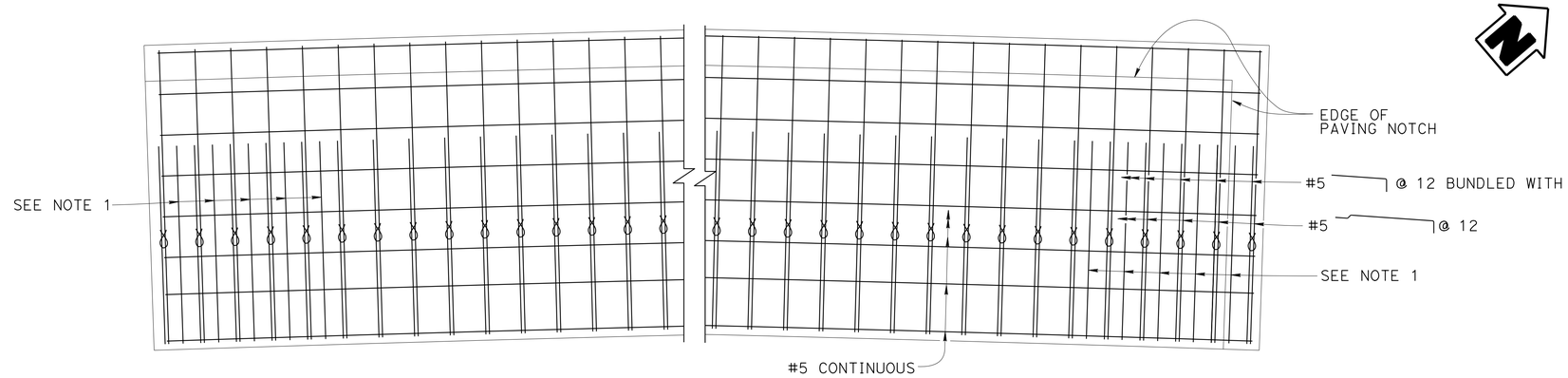

TOP MAT BAR REINFORCEMENT-LAYOUT

½" = 1'-0"

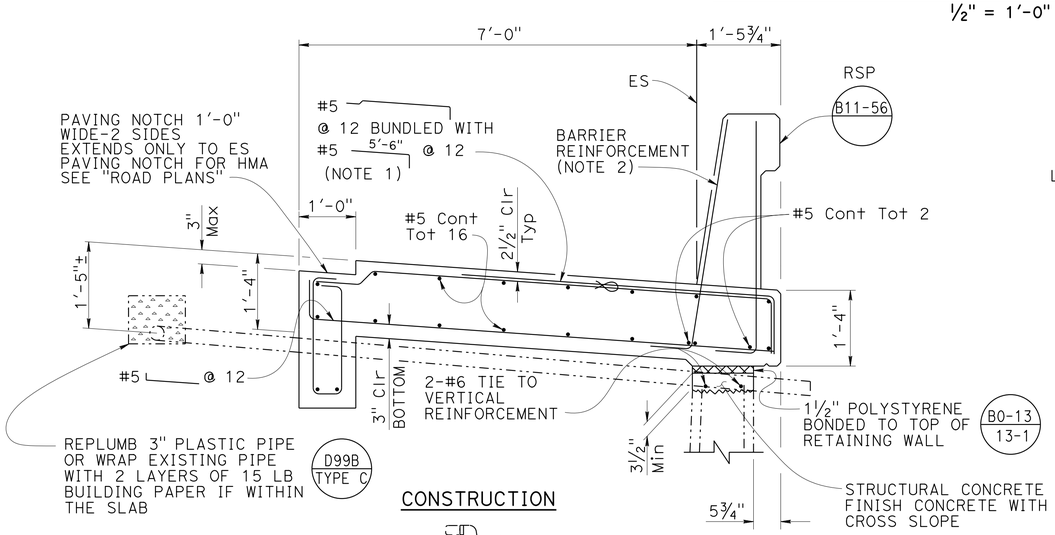

CONSTRUCTION

LEGEND:

- Indicates Bridge Removal (Portion)
- Indicates Existing Structure
- Indicates Polystyrene
- Indicates Bundled Bars

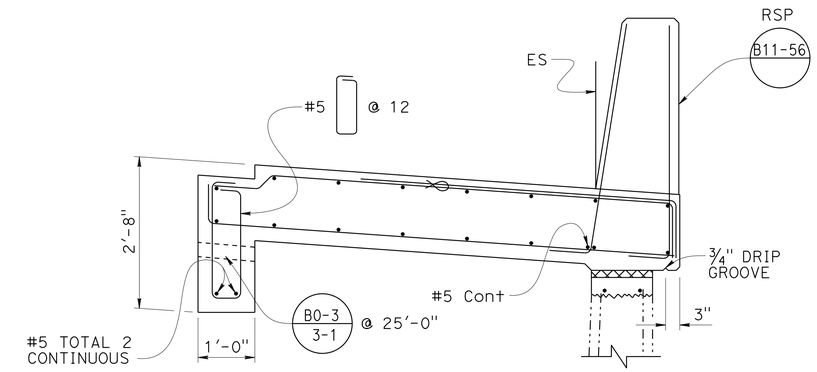

NOTE:
For Removal details see "SECTION F-F", "REMOVAL".

SECTION G-G

¾" = 1'-0"

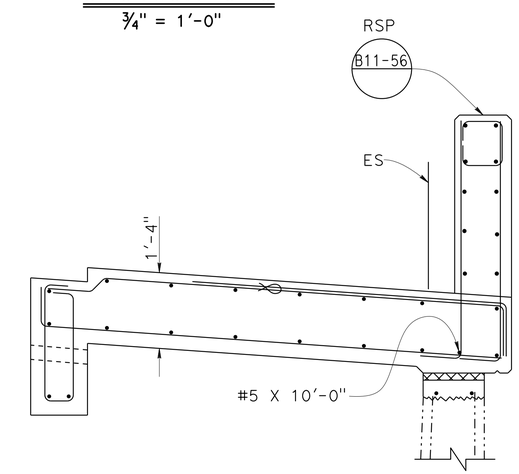

NOTE:
For Removal details see "SECTION F-F", "REMOVAL".

SECTION H-H

¾" = 1'-0"

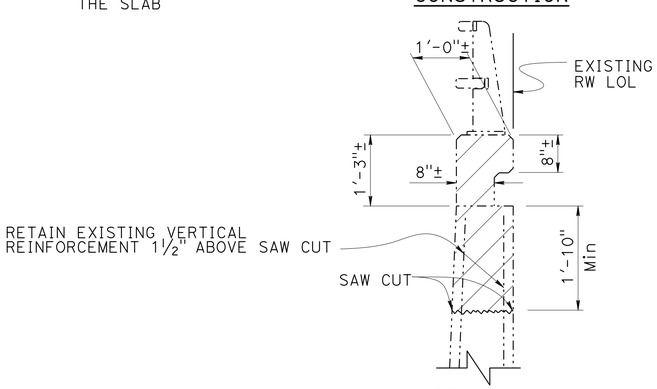

REMOVAL

SECTION F-F

¾" = 1'-0"

NOTE:
THE CONTRACTOR MUST VERIFY ALL CONTROLLING FIELD DIMENSIONS BEFORE ORDERING OR FABRICATING ANY MATERIAL.

Notes:

1. In the Barrier Slab, for a distance of 5 feet on both sides of an expansion joint in the barrier rail, provide 5-#5 5'-6" @ 12, stagger with bundled bars.
2. Not all Barrier reinforcement shown.
3. "SECTION F-F" must consist of two discrete Barrier Slabs, neither to exceed 60'-0" in length. See Standard Plan P10 for Transverse Construction Joint detail between these two slabs. Provide expansion joint in concrete barrier.
4. See "GENERAL PLAN" and "BARRIER DETAILS NO. 1" sheets for limits of construction.
5. Notes and dimensions shown individually in "SECTION F-F", "SECTION G-G" and "SECTION H-H" apply to the Barrier Slab set.

	BY	CHECKED
DESIGN	B. Addlespurger	D. Menzmer
DETAILS	H. Mauroschadt	D. Menzmer
QUANTITIES	J. Wang	B. Addlespurger

STATE OF CALIFORNIA DEPARTMENT OF TRANSPORTATION

DIVISION OF ENGINEERING SERVICES STRUCTURE DESIGN — DESIGN BRANCH 12

BRIDGE NO. 02-0134R/L — POST MILE R 58.2

KLAMATH RIVER BRIDGE & SEPARATION
BARRIER DETAILS NO. 3

STRUCTURES DESIGN DETAIL SHEET (ENGLISH) (REV. 09-01-10)

ORIGINAL SCALE IN INCHES FOR REDUCED PLANS 0 1 2 3

UNIT: 3606
PROJECT NUMBER & PHASE: 0215000021
CONTRACT NO.: 02-4F58U

DISREGARD PRINTS BEARING EARLIER REVISION DATES

REVISION DATES: 11-30-15 — 2-26-16 — 6-8-16

SHEET 11 OF 11

FILE => 02-0134rl-g-bsdet03.dgn

USERNAME => S123119 DATE PLOTTED => 21-JUN-2016 TIME PLOTTED => 14:00

DIST	COUNTY	ROUTE	POST MILES TOTAL PROJECT	SHEET No.	TOTAL SHEETS
02	Sis	5	R57.8/R58.8	100	106

REGISTERED CIVIL ENGINEER — DATE: 6-9-16

PLANS APPROVAL DATE: 06-15-16

REGISTERED PROFESSIONAL ENGINEER — William W Addlespurger — No. 50697 — Exp. 09-30-17 — CIVIL — STATE OF CALIFORNIA

The State of California or its officers or agents shall not be responsible for the accuracy or completeness of scanned copies of this plan sheet.

LEGEND:

- Indicates Point of Minimum Vertical Clearance
- Indicates Existing Structure
- Indicates Bridge Removal (Portion)

NOTES:

1. Existing Type 11 Metal Railing to be removed and salvaged.
2. Existing Type 9 Concrete Barrier and Bridge Deck Overhang to be removed and replaced.
3. Concrete Barrier Type 736
4. Stucture Approach Type R(30D) and Joint Seals
5. CFRP Sheet (Exterior)
6. CFRP Sheet (Interior)
7. Paint Bridge Number and Name of Structure
8. Temporary Railing Type K, see "ROADWAY PLANS"

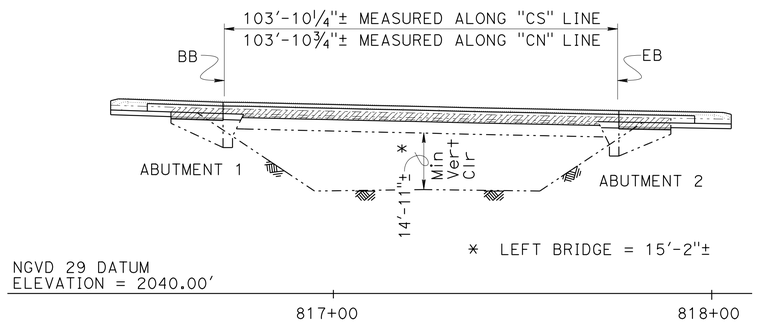

ELEVATION

1" = 20'-0"

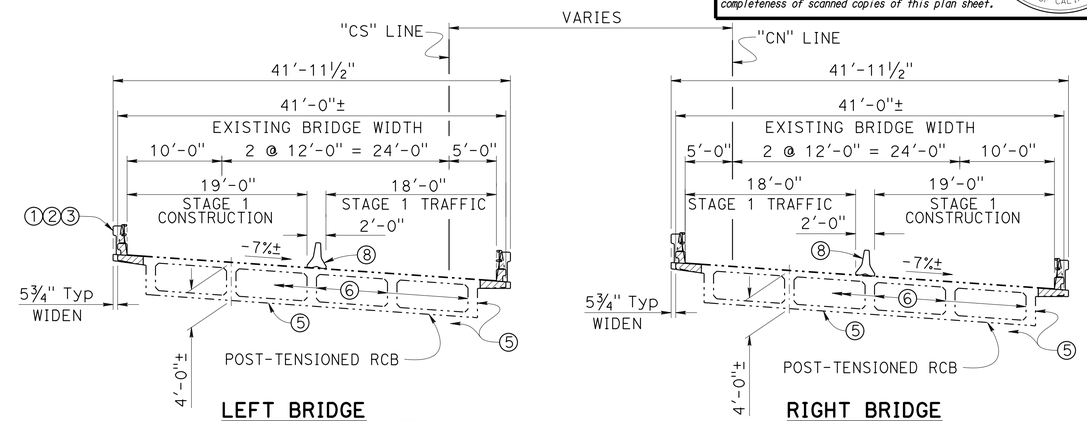

NOTE:
For complete staging, see "ROADWAY PLANS"

TYPICAL SECTION

⅛" = 1'-0"

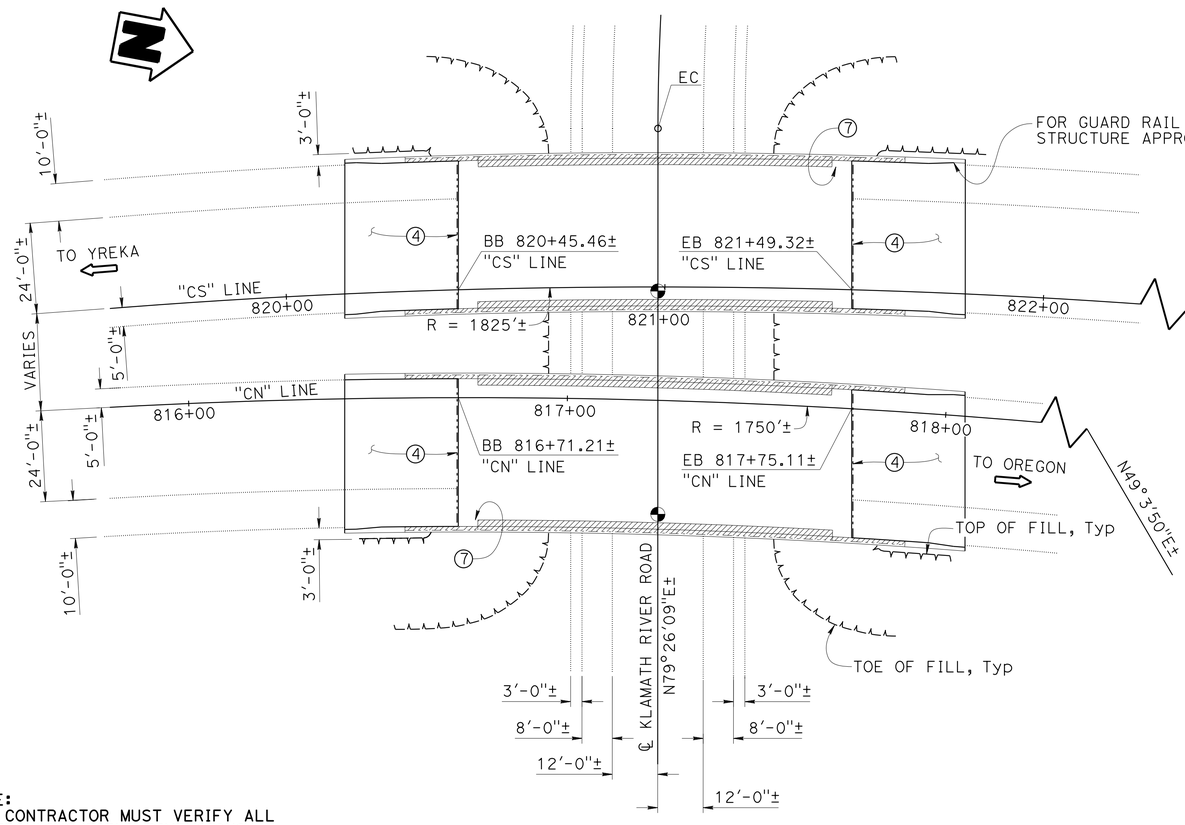

PLAN

1" = 20'-0"

NOTE:
THE CONTRACTOR MUST VERIFY ALL CONTROLLING FIELD DIMENSIONS BEFORE ORDERING OR FABRICATING ANY MATERIAL.

INDEX TO PLANS

SHEET NO.	TITLE
1.	GENERAL PLAN
2.	BARRIER DETAILS NO. 1
3.	BARRIER DETAILS NO. 2
4.	FIBER REINFORCED POLYMER DETAILS NO. 1
5.	FIBER REINFORCED POLYMER DETAILS NO. 2
6.	STRUCTURE APPROACH TYPE R (30D)
7.	SOFFIT OPENINGS

STANDARD PLANS 2010

	A10A	ABBREVIATIONS (SHEET 1 OF 2)
RSP	A10B	ABBREVIATIONS (SHEET 2 OF 2)
	B0-5	BRIDGE DETAILS
	B0-13	BRIDGE DETAILS
RSP	B6-21	JOINT SEALS (MAXIMUM MOVEMENT RATING = 2")
RSP	B11-56	CONCRETE BARRIER TYPE 736

STANDARD PLAN SHEET No.

DETAIL No.

GENERAL NOTES

DESIGN:

AASHTO LRFD BRIDGE DESIGN SPECIFICATIONS, 6th Edition and California Amendments, dated January 2014.

ACI 440.2R-08 Guide for the Design and Construction of Externally Bonded FRP Systems for Strengthening Concrete Structures.

AASHTO-GUIDE SPECIFICATIONS for Design of Bonded FRP Systems for Repair and Strengthening of Concrete Bridge Elements. First Edition 2012.

BARRIER LOADING: (Test Level 4)

DEAD LOAD:

Includes 12 psf for polyester overlay

REINFORCED CONCRETE:

f_y : 60 ksi (All bar reinforcement is epoxy coated reinforcement unless noted)

f'_c : 5 ksi deck overhangs and existing superstructure

f'_c : 3.6 ksi Wing Walls and corbels

CARBON FIBER REINFORCED POLYMER (CFRP)

MATERIAL	TENSILE STRENGTH (ksi)	MINIMUM TENSILE MODULUS OF ELASTICITY (ksi)	ULTIMATE STRAIN (%)
WET LAYUP FIBER SHEET	500	28800	1.35

NOTE: For quantities, see "BARRIER DETAILS NO. 2" sheet.

Matt Holm
DESIGN ENGINEER

	BY	CHECKED			
DESIGN	B. Addlespurger	D. Menzmer	LOAD & RESISTANCE FACTOR DESIGN	LIVE LOADING: HL93 and PERMIT DESIGN VEHICLE	
DETAILS	H. Mauroschadt	D. Menzmer	LAYOUT	B. Addlespurger	D. Menzmer
QUANTITIES	P. Mak	B. Addlespurger	SPECIFICATIONS	T. Nedwick	PLANS AND SPECS COMPARED X

ORIGINAL SCALE IN INCHES FOR REDUCED PLANS 0 1 2 3

STATE OF CALIFORNIA
DEPARTMENT OF TRANSPORTATION

DIVISION OF ENGINEERING SERVICES
STRUCTURE DESIGN
DESIGN BRANCH 12

BRIDGE NO. 02-0133R/L
POST MILE R 58.1

KLAMATH RIVER ROAD UC
GENERAL PLAN

UNIT: 3606
PROJECT NUMBER & PHASE: 0215000021
CONTRACT NO.: 02-4F58U

DISREGARD PRINTS BEARING EARLIER REVISION DATES

REVISION DATES: 1-06-16 6-8-16 5-2-16

SHEET 1 OF 7

USERNAME => S123119 DATE PLOTTED => 21-JUN-2016 TIME PLOTTED => 14:00

STRUCTURES DESIGN GENERAL PLAN SHEET (ENGLISH) (REV.09-01-10)

FILE => 02-133rl-a-gp.dgn

DIST	COUNTY	ROUTE	POST MILES TOTAL PROJECT	SHEET No.	TOTAL SHEETS
02	Sis	5	R57.8/R58.8	101	106

REGISTERED CIVIL ENGINEER — DATE 6-9-16

PLANS APPROVAL DATE 06-15-16

REGISTERED PROFESSIONAL ENGINEER — William W Addlespurger — No. 50697 — Exp. 09-30-17 — CIVIL — STATE OF CALIFORNIA

The State of California or its officers or agents shall not be responsible for the accuracy or completeness of scanned copies of this plan sheet.

NOTES:

1. See "ROADWAY PLANS" for guard rail connection to barrier on Structure Approach.
2. On the Left Approach Barrier to 02-133R, "SECTION B-B" must extend to the beginning of the Structure Approach Slab.
3. See "STRUCTURE APPROACH TYPE R(30D)" sheet for details.
4. Abutment 1 Right exterior wing wall shown, other wing walls similar.
5. All barrier Reinforcement not shown for clarity.

LEGEND:

Indicates Bridge Removal (Portion): Portion of Wing Wall, concrete end block and transition anchor block and overhangs. Barrier removal not shown for clarity.

Indicates Polystyrene

Indicates Existing Structure

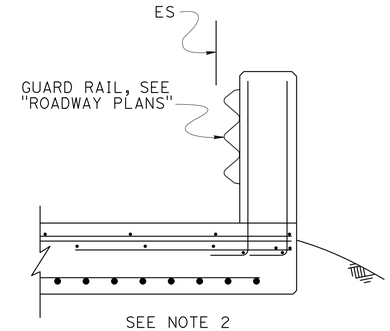

SECTION A-A
3/4" = 1'-0"

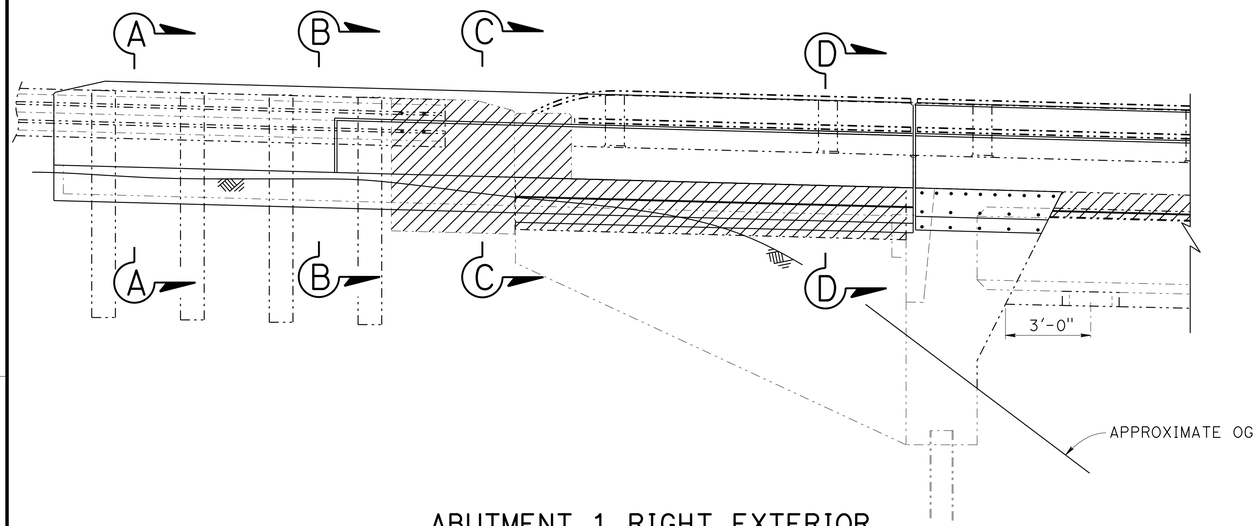

ABUTMENT 1 RIGHT EXTERIOR WING WALL ELEVATION
3/8" = 1'-0"

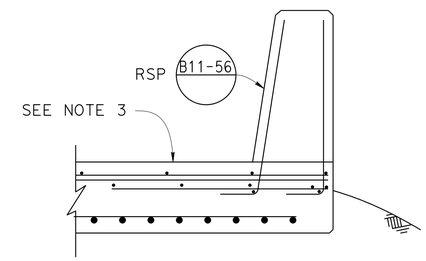

SECTION B-B
3/4" = 1'-0"

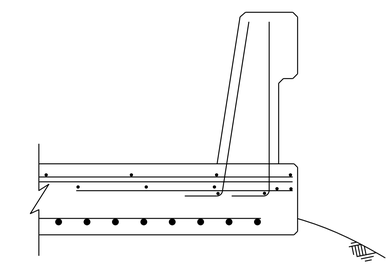

SECTION C-C
3/4" = 1'-0"

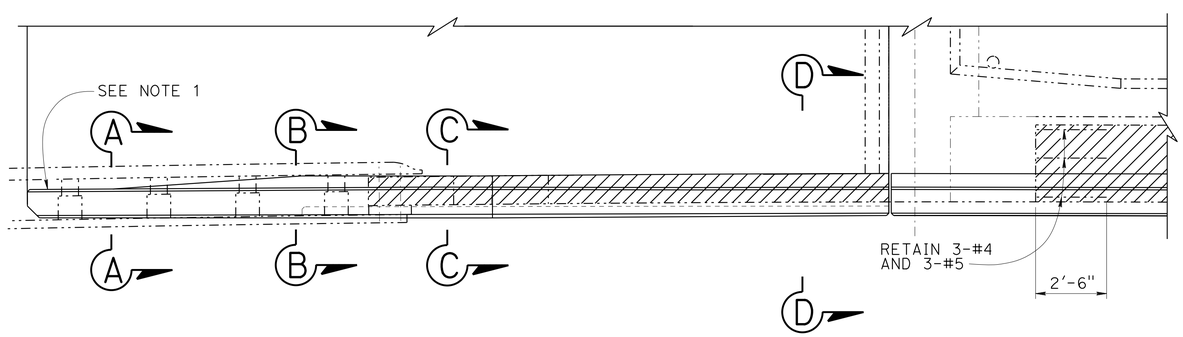

ABUTMENT PART PLAN
3/8" = 1'-0"

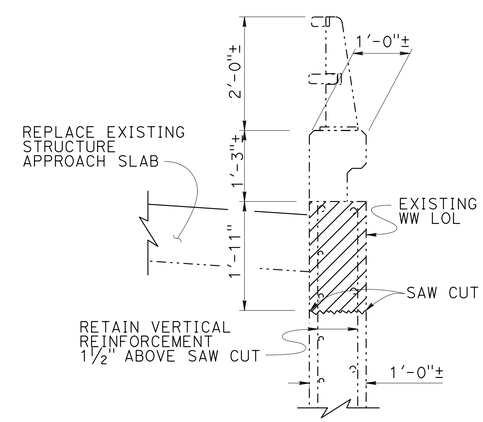

WING WALL REMOVAL
3/4" = 1'-0"

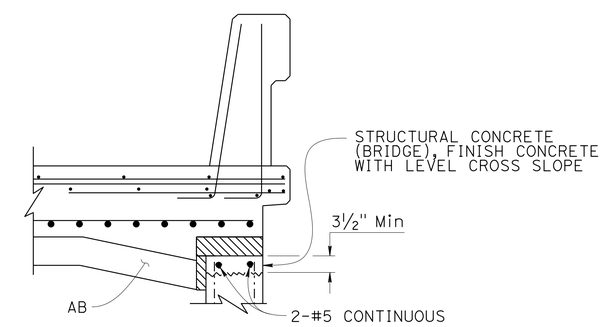

SECTION D-D
3/4" = 1'-0"

NOTE:
THE CONTRACTOR MUST VERIFY ALL CONTROLLING FIELD DIMENSIONS BEFORE ORDERING OR FABRICATING ANY MATERIAL.

	BY	CHECKED
DESIGN	B. Addlespurger	D. Menzmer
DETAILS	H. Mauroschadt	D. Menzmer
QUANTITIES	P. Mak	B. Addlespurger

STATE OF CALIFORNIA
DEPARTMENT OF TRANSPORTATION

DIVISION OF ENGINEERING SERVICES
STRUCTURE DESIGN
DESIGN BRANCH 12

BRIDGE NO. 02-0133R/L
POST MILE R 58.1

KLAMATH RIVER ROAD UC
BARRIER DETAILS NO. 1

STRUCTURES DESIGN DETAIL SHEET (ENGLISH) (REV. 09-01-10)

ORIGINAL SCALE IN INCHES FOR REDUCED PLANS 0 1 2 3

UNIT: 3606
PROJECT NUMBER & PHASE: 0215000021
CONTRACT NO.: 02-4F58U

DISREGARD PRINTS BEARING EARLIER REVISION DATES

REVISION DATES 1-11-16 1-11-16 2-26-16 1-25-16

SHEET 2 OF 7

FILE => 02-133rl-g-bardet01.dgn

USERNAME => s123119 DATE PLOTTED => 21-JUN-2016 TIME PLOTTED => 14:00

DIST	COUNTY	ROUTE	POST MILES TOTAL PROJECT	SHEET No.	TOTAL SHEETS
02	Sis	5	R57.8/R58.8	102	106

REGISTERED CIVIL ENGINEER — DATE 6-9-16

PLANS APPROVAL DATE 06-15-16

REGISTERED PROFESSIONAL ENGINEER — William W Addlespurger — No. 50697 — Exp. 09-30-17 — CIVIL — STATE OF CALIFORNIA

The State of California or its officers or agents shall not be responsible for the accuracy or completeness of scanned copies of this plan sheet.

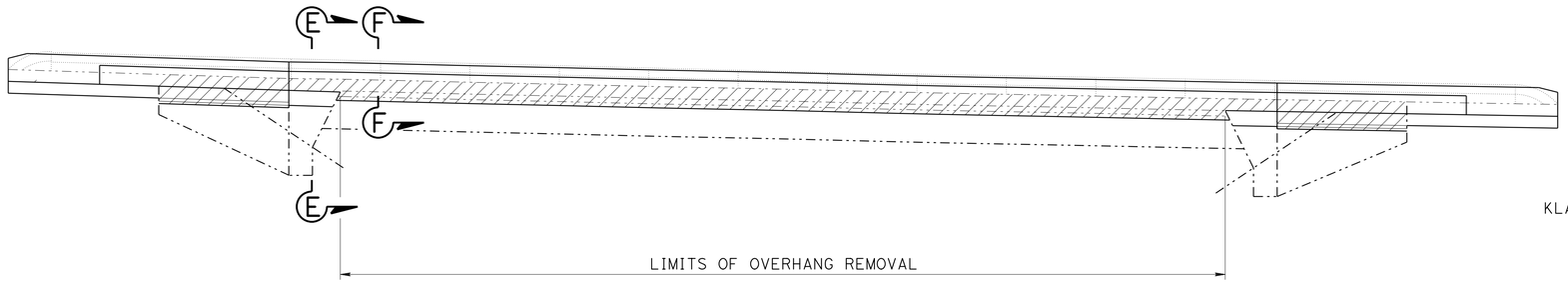

NOTE:
Right side of Bridge shown Left Side similar.

LEGEND:

Indicates Bridge Removal (Portion)

Indicates Existing Structure

DEVELOPED ELEVATION

1/8" = 1'-0"

KLAMATH RIVER ROAD UC — BRIDGE NO. 02-0133R/L

QUANTITIES

SALVAGE METAL BRIDGE RAILING	537	LF
PREPARE CONCRETE BRIDGE DECK SURFACE	645	SQFT
FURNISH POLYESTER CONCRETE OVERLAY	54	CF
PLACE POLYESTER CONCRETE OVERLAY	645	SQFT
CARBON FIBER REINFORCED POLYMER SHEET (EXTERIOR)	9,100	SQFT
CARBON FIBER REINFORCED POLYMER SHEET (INTERIOR)	3,803	SQFT
ACCESS OPENING, SOFFIT	16	EA
BRIDGE REMOVAL (PORTION), LOCATION A	LUMP	SUM
STRUCTURAL CONCRETE, BRIDGE	1	CY
STRUCTURAL CONCRETE, BRIDGE (POLYMER FIBER)	35	CY
AGGREGATE BASE (APPROACH SLAB)	25	CY
STRUCTURAL CONCRETE, APPROACH SLAB (TYPE R)	245	CY
DRILL AND BOND DOWEL	133	LF
JOINT SEAL (MR = 1/2")	176	LF
BAR REINFORCING STEEL (EPOXY COATED) (BRIDGE)	4,258	LB
BAR REINFORCING STEEL (STAINLESS STEEL)	614	LB
CONCRETE BARRIER (TYPE 736)	664	LF

CONCRETE STRENGTH AND TYPE LIMITS

Structural Concrete Bridge (Polymer Fiber) - Deck overhangs

Structural Concrete Bridge - Wingwalls and Corbels

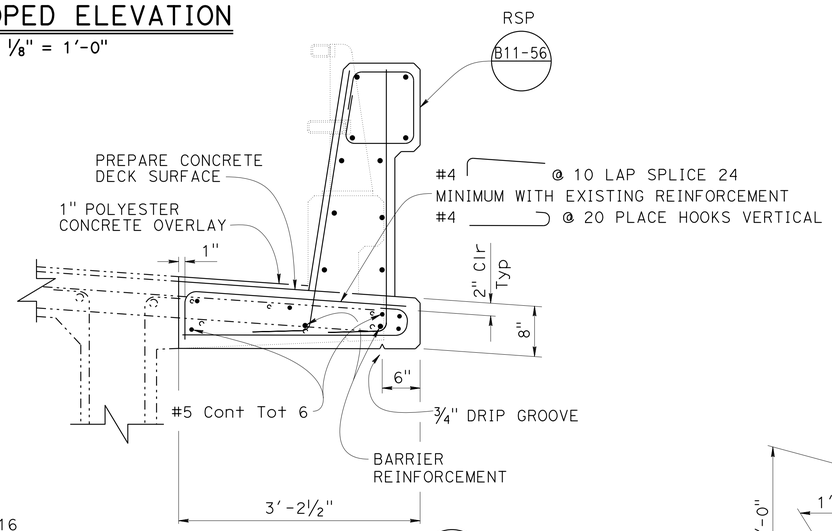

CONSTRUCTION B0-5 / 5-15

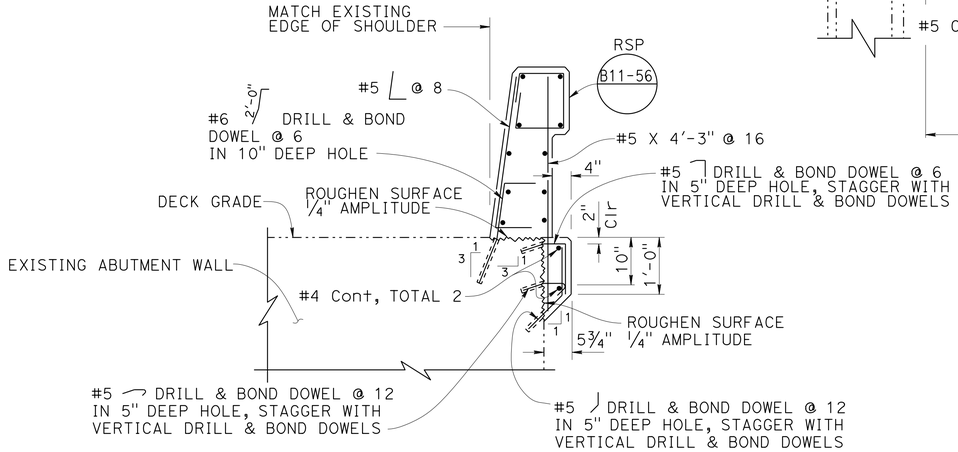

NOTE:
All Dowels are Stainless Steel.

SECTION E-E

3/4" = 1'-0"

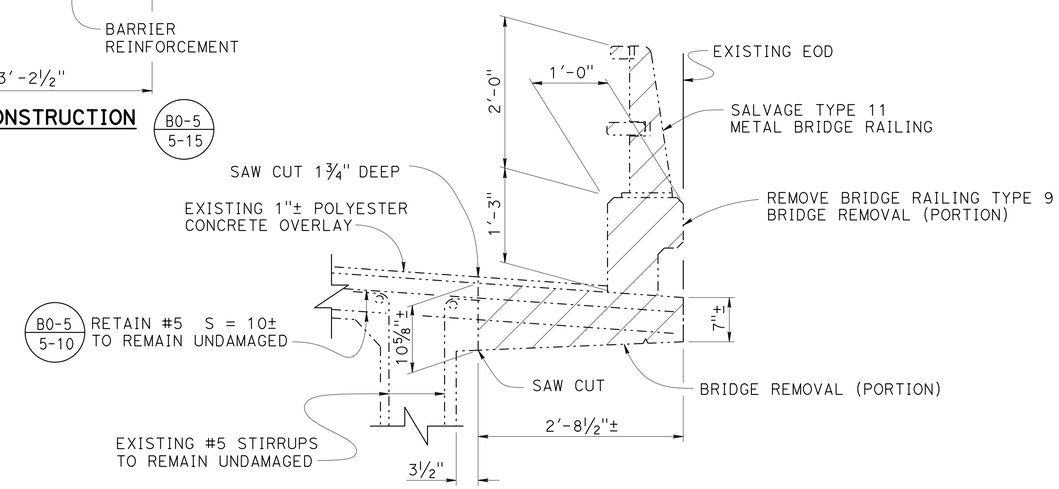

REMOVAL

SECTION F-F

1" = 1'-0"

NOTE:
THE CONTRACTOR MUST VERIFY ALL CONTROLLING FIELD DIMENSIONS BEFORE ORDERING OR FABRICATING ANY MATERIAL.

	BY	CHECKED
DESIGN	B. Addlespurger	D. Menzmer
DETAILS	H. Mauroschadt	D. Menzmer
QUANTITIES	P. Mak	B. Addlespurger

STATE OF CALIFORNIA — DEPARTMENT OF TRANSPORTATION

DIVISION OF ENGINEERING SERVICES — STRUCTURE DESIGN — DESIGN BRANCH 12

BRIDGE NO. 02-0133R/L — POST MILE R 58.1

KLAMATH RIVER ROAD UC
BARRIER DETAILS NO. 2

STRUCTURES DESIGN DETAIL SHEET (ENGLISH) (REV. 09-01-10)

ORIGINAL SCALE IN INCHES FOR REDUCED PLANS 0 1 2 3

UNIT: 3606
PROJECT NUMBER & PHASE: 0215000021
CONTRACT NO.: 02-4F58U

DISREGARD PRINTS BEARING EARLIER REVISION DATES

REVISION DATES 12-8-15 6-8-16 6-8-16

SHEET 3 OF 7

FILE => 02-133rl-g-bardet02.dgn

USERNAME => S123119 DATE PLOTTED => 21-JUN-2016 TIME PLOTTED => 14:00

DIST	COUNTY	ROUTE	POST MILES TOTAL PROJECT	SHEET No.	TOTAL SHEETS
02	Sis	5	R57.8/R58.8	103	106

REGISTERED CIVIL ENGINEER — DATE 6-9-16

06-15-16
PLANS APPROVAL DATE

REGISTERED PROFESSIONAL ENGINEER — William W Addlespurger — No. 50697 — Exp. 09-30-17 — CIVIL — STATE OF CALIFORNIA

The State of California or its officers or agents shall not be responsible for the accuracy or completeness of scanned copies of this plan sheet.

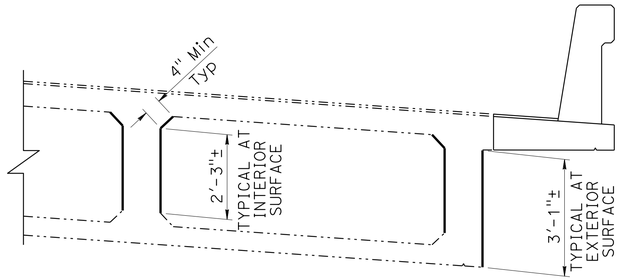

PART TYPICAL SECTION

½" = 1'-0"

LEGEND:

- - - - - Indicates Existing Structure

② Indicates Number of Carbon Fiber Reinforced Polymer sheet layers on Girder Surface

↕ Indicates Strong Direction of Fabric in Uni-directional Carbon Fiber Reinforced Polymer sheets (to be placed normal to the deck/soffit girder interface).

NOTES:

1. Surface is defined as the surface to receive the composite. Fabric refers to the unidirectional fiber. Carbon Fiber Reinforced Polymer (CFRP) composite is Carbon fiber and Epoxy resin.
2. Minimum number of layers for CFRP system is based on minimum effective fiber layer thickness of 0.0065 inches. Fewer number of layers can be installed for effectively thicker fiber layers provided that an equivalent stiffness is maintained.
3. No splices allowed in CFRP shear reinforcement fabric.
4. Abutment 1 end of structure shown, abutment 2 end is similar.
5. Place CFRP shear reinforcement symmetrically about the ℄ of the spans, and on every girder face.
6. Unsound concrete shall be repaired if found at areas where CFRP is to be replaced.

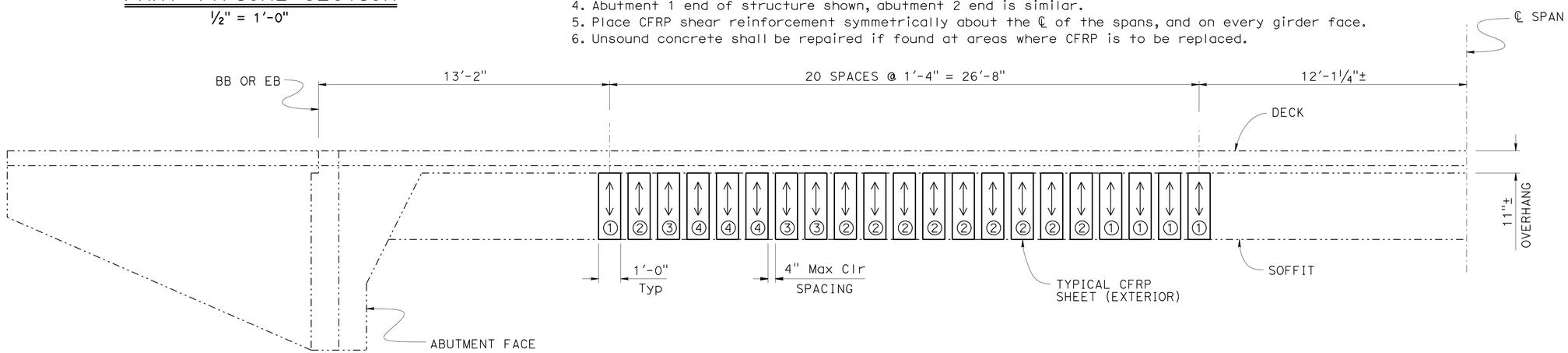

PART EXTERIOR ELEVATION VIEW

⅜" = 1'-0"

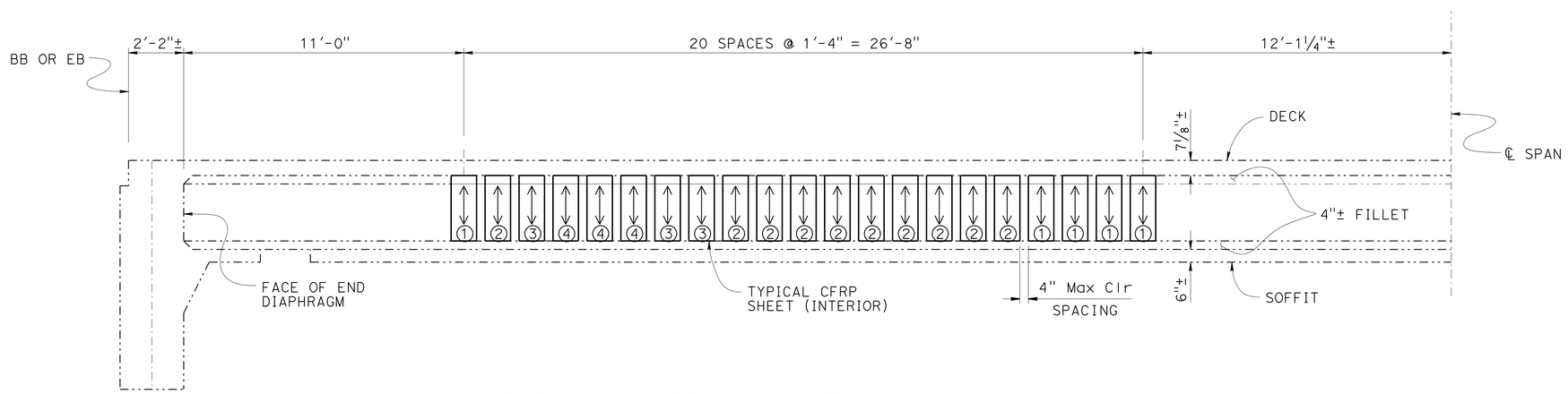

PART INTERIOR ELEVATION VIEW

⅜" = 1'-0"

NOTE:
THE CONTRACTOR MUST VERIFY ALL CONTROLLING FIELD DIMENSIONS BEFORE ORDERING OR FABRICATING ANY MATERIAL.

	BY	CHECKED
DESIGN	D. Menzmer	K. Lee
DETAILS	H. Mauroschadt	B. Addlespurger
QUANTITIES	J. Wang	B. Addlespurger

STATE OF CALIFORNIA
DEPARTMENT OF TRANSPORTATION

DIVISION OF ENGINEERING SERVICES
STRUCTURE DESIGN
DESIGN BRANCH 12

BRIDGE NO. 02-0133R/L
POST MILE R 58.1

KLAMATH RIVER ROAD UC
FIBER REINFORCED POLYMER DETAILS NO. 1

STRUCTURES DESIGN DETAIL SHEET (ENGLISH) (REV. 09-01-10)

ORIGINAL SCALE IN INCHES FOR REDUCED PLANS 0 1 2 3

UNIT: 3606
PROJECT NUMBER & PHASE: 0215000021
CONTRACT NO.: 02-4F58U

DISREGARD PRINTS BEARING EARLIER REVISION DATES

REVISION DATES: 12-4-15 | 3-15-16 | | 2-26-16

SHEET 4 OF 7

FILE => 02-133rl-1-frpd01.dgn

USERNAME => S123119 DATE PLOTTED => 21-JUN-2016 TIME PLOTTED => 14:00

DIST	COUNTY	ROUTE	POST MILES TOTAL PROJECT	SHEET No.	TOTAL SHEETS
02	Sis	5	R57.8/R58.8	104	106

REGISTERED CIVIL ENGINEER — DATE: 6-9-16

06-15-16
PLANS APPROVAL DATE

REGISTERED PROFESSIONAL ENGINEER — William W Addlespurger — No. 50697 — Exp. 09-30-17 — CIVIL — STATE OF CALIFORNIA

The State of California or its officers or agents shall not be responsible for the accuracy or completeness of scanned copies of this plan sheet.

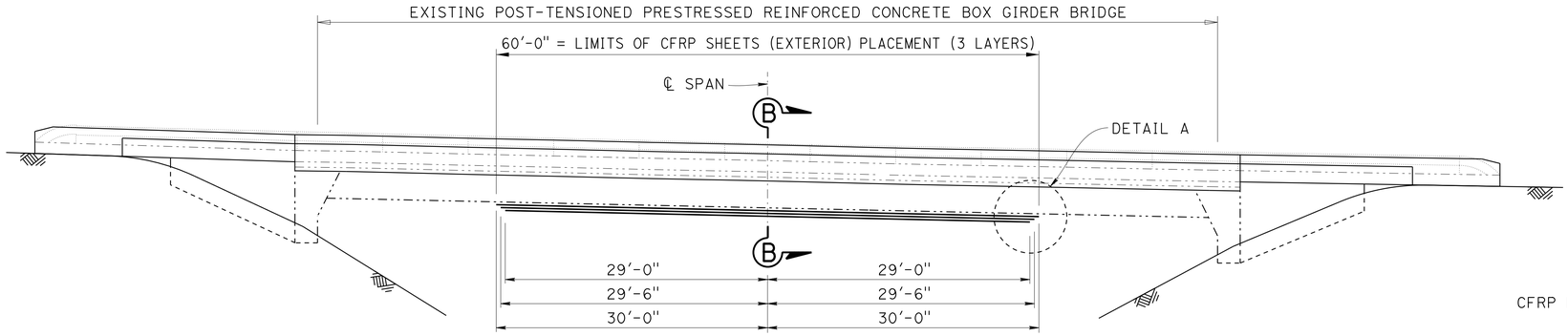

ELEVATION
1/8" = 1'-0"

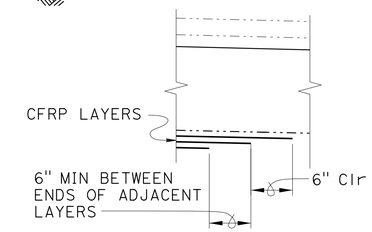

DETAIL A
NO SCALE

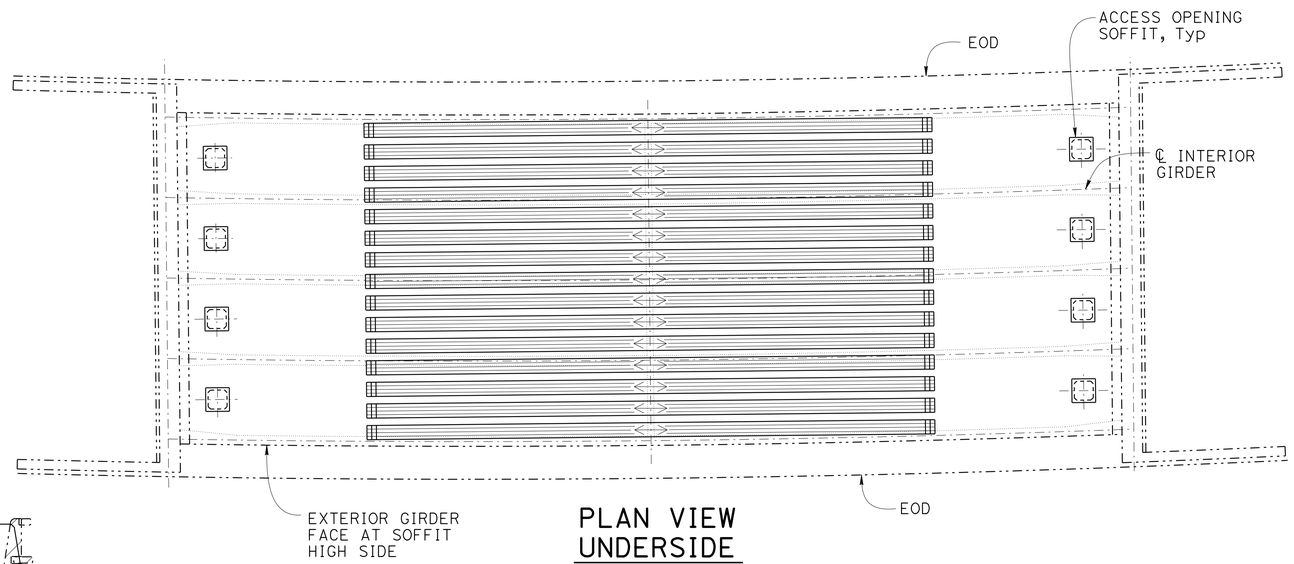

PLAN VIEW UNDERSIDE
1/8" = 1'-0"

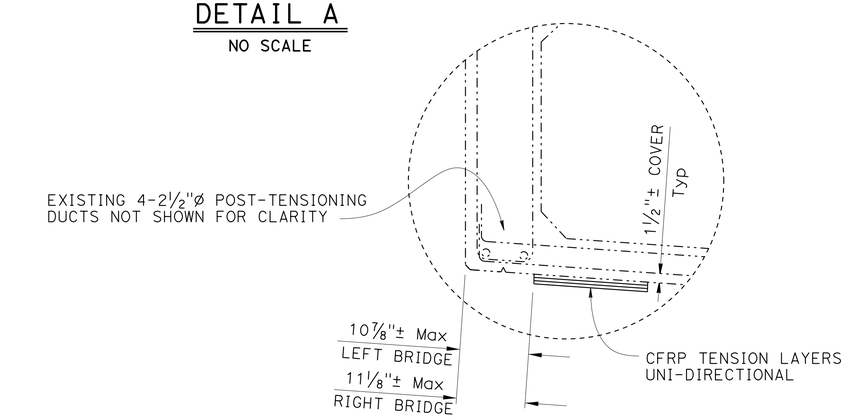

DETAIL C
1" = 1'-0"

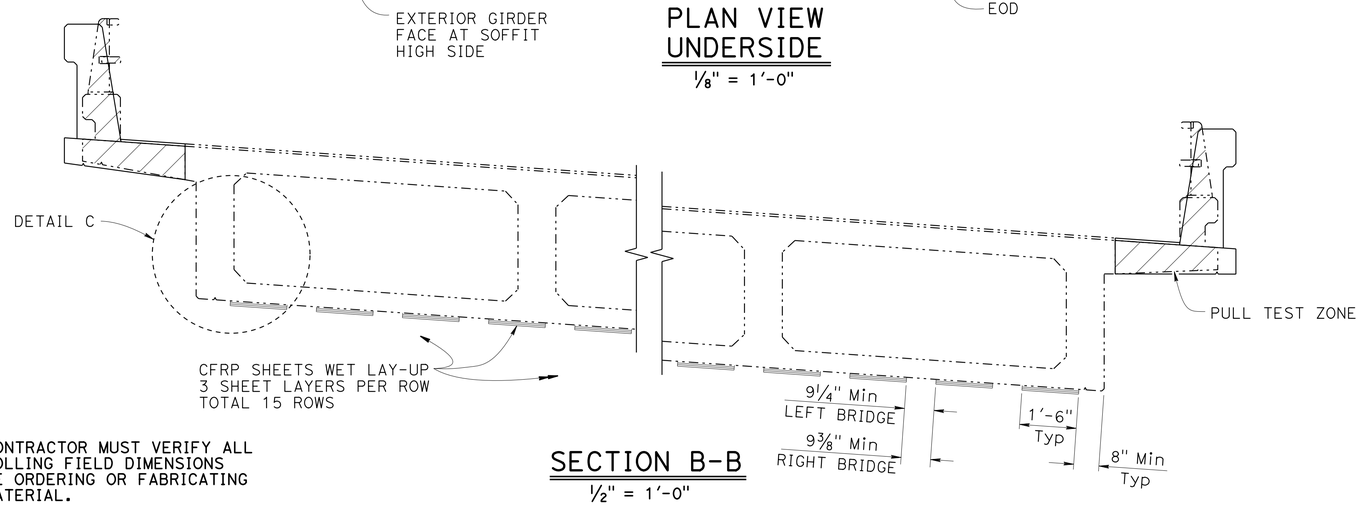

SECTION B-B
½" = 1'-0"

NOTE:
THE CONTRACTOR MUST VERIFY ALL CONTROLLING FIELD DIMENSIONS BEFORE ORDERING OR FABRICATING ANY MATERIAL.

NOTES:
1. Surface is defined as the surface to receive the composite. Fabric refers to the unidirectional fiber. Carbon Fiber Reinforced Polymer (CFRP) composite is Carbon fiber and Epoxy resin.
2. Minimum number of layers for CFRP system is based on minimum effective fiber layer thickness of 0.0065 inches. Fewer number of layers can be installed for effectively thicker fiber layers provided that an equivalent stiffness is maintained.
3. Minimum spacing between sheets as shown. All sheets to be placed parallel.
4. Unsound Concrete shall be repaired if found at areas where CFRP is to be placed.
5. Soffit access openings shall be placed in the center of the bay, and as shown on other sheets.

LEGEND:
- Indicates New Construction
- Indicates Existing Structure
- Indicates Strong Direction of Fabric in Uni-directional Carbon Fiber Reinforced Polymer sheets

	BY	CHECKED
DESIGN	B. Addlespurger	K. Lee
DETAILS	H. Mauroschadt	K. Lee
QUANTITIES	J. Wang	B. Addlespurger

STATE OF CALIFORNIA
DEPARTMENT OF TRANSPORTATION

DIVISION OF ENGINEERING SERVICES
STRUCTURE DESIGN
DESIGN BRANCH 12

BRIDGE NO. 02-0133R/L
POST MILE R 58.1

KLAMATH RIVER ROAD UC
FIBER REINFORCED POLYMER DETAILS NO. 2

STRUCTURES DESIGN DETAIL SHEET (ENGLISH) (REV. 09-01-10)

ORIGINAL SCALE IN INCHES FOR REDUCED PLANS 0 1 2 3

UNIT: 3606
PROJECT NUMBER & PHASE: 0215000021
CONTRACT NO.: 02-4F58U

DISREGARD PRINTS BEARING EARLIER REVISION DATES

REVISION DATES: 12-1-15 | 6-8-16 | 1-3-16

SHEET 5 OF 7

FILE => 02-133rl-l-frpd02.dgn

USERNAME => S123119 DATE PLOTTED => 21-JUN-2016 TIME PLOTTED => 14:00

DIST	COUNTY	ROUTE	POST MILES TOTAL PROJECT	SHEET No.	TOTAL SHEETS
02	Sis	5	R57.8/R58.8	105	106

REGISTERED CIVIL ENGINEER — DATE 6-9-16

06-15-16
PLANS APPROVAL DATE

REGISTERED PROFESSIONAL ENGINEER — William W Addlespurger — No. 50697 — Exp. 09-30-17 — CIVIL — STATE OF CALIFORNIA

The State of California or its officers or agents shall not be responsible for the accuracy or completeness of scanned copies of this plan sheet.

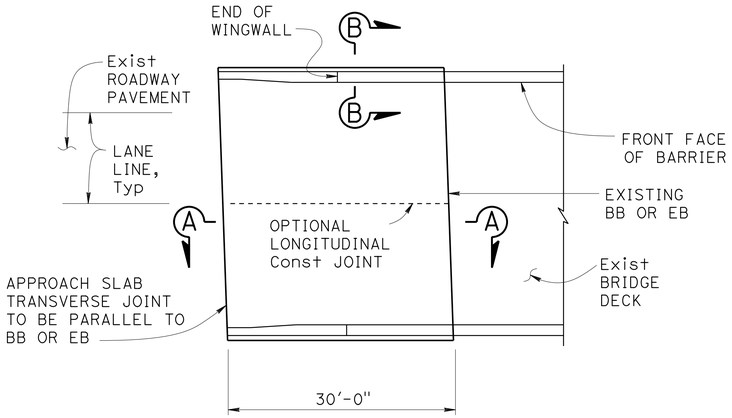

PLAN

1" = 10'

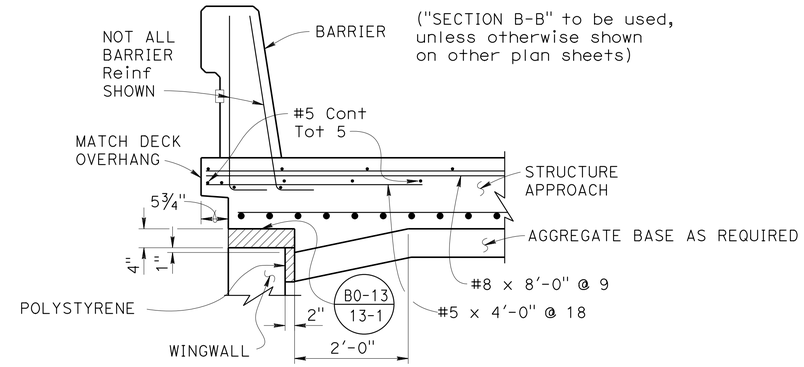

Indicates Expanded Polystyrene, remove after concrete is placed.

SECTION B-B

¾" = 1'-0"

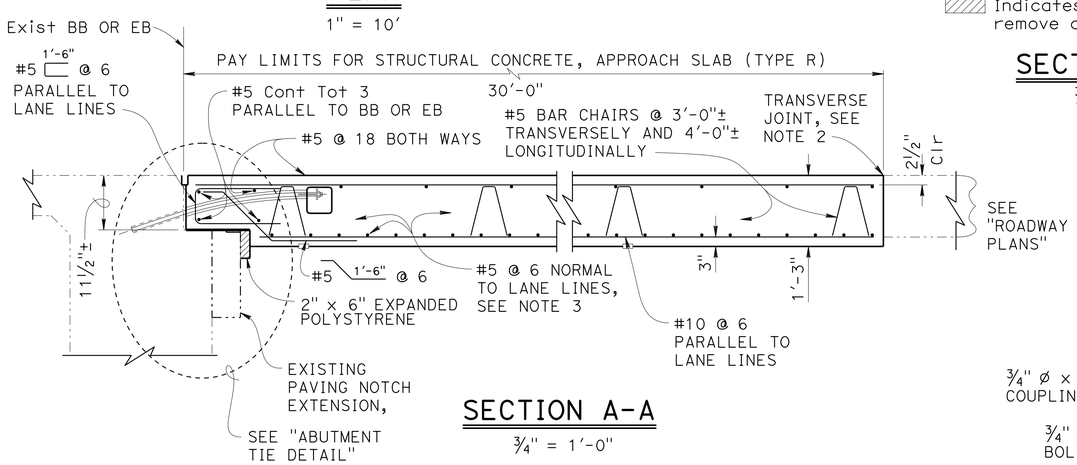

SECTION A-A

¾" = 1'-0"

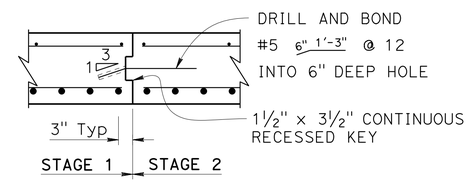

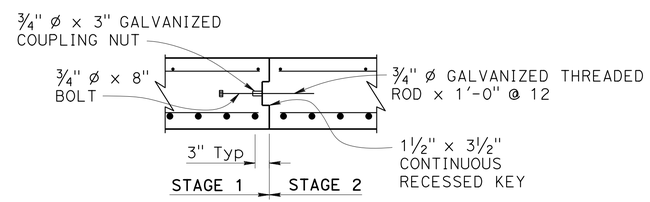

NOTES:

1. For details not shown, see other plan sheets. Adjust reinforcement to clear sawcut for sealed joint.
2. Transverse Joint must be a minimum of 5'-0" from an existing or constructed weakened plane joint in approach PCC roadway pavement. Refer to Standard Plans P10 and P14.
3. At the Contractors option, Approach Slab transverse reinforcement may be placed parallel to BB or EB.

LEGEND:

Indicates Existing Structure

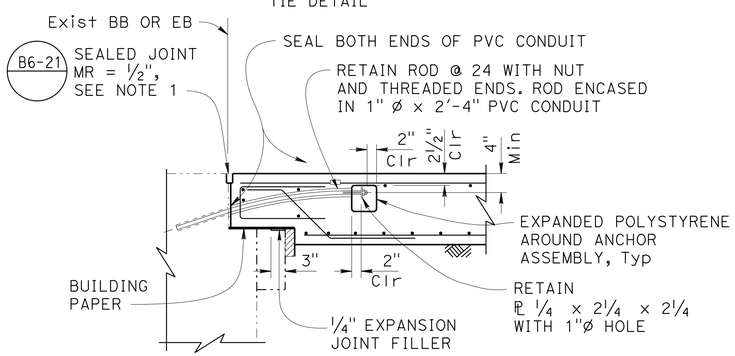

NOTE: For details not shown, see "SECTION A-A".

ABUTMENT TIE DETAIL

¾" = 1'-0"

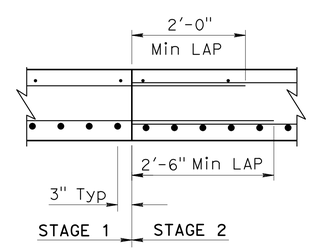

LONGITUDINAL CONSTRUCTION JOINT ALTERNATIVES

¾" = 1'-0"

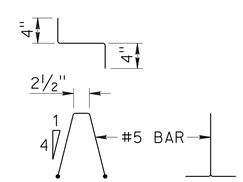

BAR CHAIR DETAIL

1" = 1'-0"

NOTE:
THE CONTRACTOR MUST VERIFY ALL CONTROLLING FIELD DIMENSIONS BEFORE ORDERING OR FABRICATING ANY MATERIAL.

DESIGN	BY B. Addlespurger	CHECKED D. Menzmer	
DETAILS	BY H. Mauroschadt	CHECKED D. Menzmer	
QUANTITIES	BY P. Mak	CHECKED B. Addlespurger	

STATE OF CALIFORNIA
DEPARTMENT OF TRANSPORTATION

DIVISION OF ENGINEERING SERVICES
STRUCTURE DESIGN
DESIGN BRANCH 12

BRIDGE NO. 02-0133R/L
POST MILE R 58.1

KLAMATH RIVER ROAD UC
STRUCTURE APPROACH TYPE R (30D)

STRUCTURES DESIGN DETAIL SHEET (ENGLISH) (REV. 09-01-10)

ORIGINAL SCALE IN INCHES FOR REDUCED PLANS 0 1 2 3

UNIT: 3606
PROJECT NUMBER & PHASE: 0215000021
CONTRACT NO.: 02-4F58U

DISREGARD PRINTS BEARING EARLIER REVISION DATES

REVISION DATES 12-30-15 1-11-16 2-26-16 1-26-16 — SHEET 6 OF 7

FILE => 02-133rl-j-sapp.dgn

USERNAME => s123119 DATE PLOTTED => 21-JUN-2016 TIME PLOTTED => 14:00

DIST	COUNTY	ROUTE	POST MILES TOTAL PROJECT	SHEET No.	TOTAL SHEETS
02	Sis	5	R57.8/R58.8	106	106

REGISTERED CIVIL ENGINEER — DATE 6-9-16

06-15-16
PLANS APPROVAL DATE

REGISTERED PROFESSIONAL ENGINEER — William W Addlespurger — No. 50697 — Exp. 09-30-17 — CIVIL — STATE OF CALIFORNIA

The State of California or its officers or agents shall not be responsible for the accuracy or completeness of scanned copies of this plan sheet.

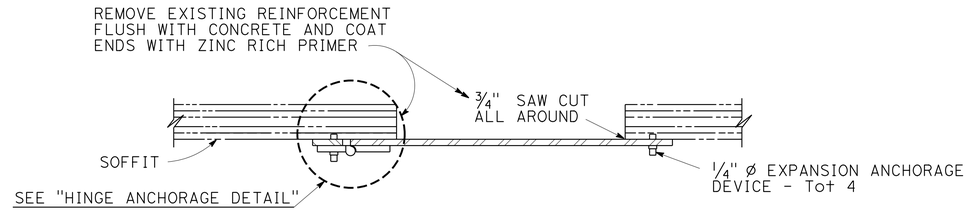

SECTION A-A

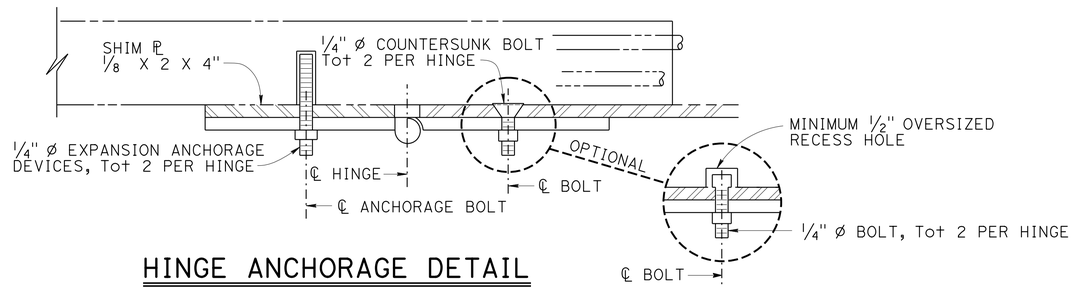

HINGE ANCHORAGE DETAIL

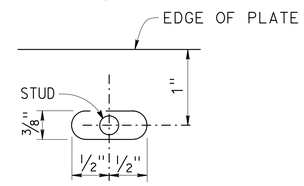

DETAIL A

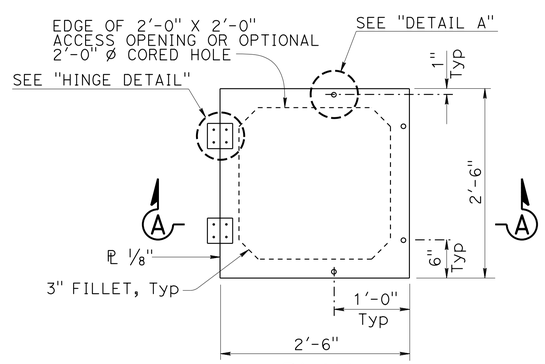

PLAN

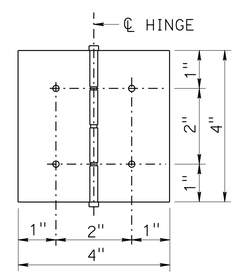

HINGE DETAIL

NOTES:

1. Non-removable pin in hinge.
2. Hinge assembly to be galvanized, brass or stainless steel.
3. Use thread locking system for all hinge nuts.
4. Hinge assembly to be minimum 1/8" Thick.

SOFFIT ACCESS DOOR ASSEMBLY

NOTE: SOFFIT ACCESS DOOR OPENING DIRECTION TO BE DETERMINED BY THE ENGINEER

NOTE:
THE CONTRACTOR MUST VERIFY ALL CONTROLLING FIELD DIMENSIONS BEFORE ORDERING OR FABRICATING ANY MATERIAL.

	BY	CHECKED
DESIGN	B. Addlespurger	D. Menzmer
DETAILS	H. Mauroschadt	P. Mak
QUANTITIES	P. Mak	B. Addlespurger

STATE OF CALIFORNIA
DEPARTMENT OF TRANSPORTATION

DIVISION OF ENGINEERING SERVICES
STRUCTURE DESIGN
DESIGN BRANCH 12

BRIDGE NO. 02-0133R/L
POST MILE R 58.1

KLAMATH RIVER ROAD UC
SOFFIT OPENINGS

STRUCTURES DESIGN DETAIL SHEET (ENGLISH) (REV. 09-01-10)

ORIGINAL SCALE IN INCHES FOR REDUCED PLANS 0 1 2 3

UNIT: 3606
PROJECT NUMBER & PHASE: 0215000021
CONTRACT NO.: 02-4F58U

DISREGARD PRINTS BEARING EARLIER REVISION DATES

REVISION DATES: 4-14-14 12-14-15 1-28-16 2-26-16

SHEET 7 OF 7

FILE => 02-133rl-k-so.dgn

USERNAME => S123119 DATE PLOTTED => 21-JUN-2016 TIME PLOTTED => 14:00