Dist	COUNTY	ROUTE	POST MILES TOTAL PROJECT	SHEET No.	TOTAL SHEETS
03	Yol	16	23.2/23.5	1	52

ACHSSTP-P016(039)

STATE OF CALIFORNIA
DEPARTMENT OF TRANSPORTATION

PROJECT PLANS FOR CONSTRUCTION ON
STATE HIGHWAY

IN YOLO COUNTY NEAR CAPAY FROM 0.3 MILE WEST OF COUNTY ROAD 82B TO COUNTY ROAD 82B

TO BE SUPPLEMENTED BY STANDARD PLANS DATED 2010

INDEX OF PLANS

SHEET No.	DESCRIPTION
1	TITLE AND LOCATION MAP
2-3	TYPICAL CROSS SECTIONS
4	PROJECT CONTROL
5-6	LAYOUTS
7-8	PROFILES AND SUPERELEVATION DIAGRAMS
9-12	CONSTRUCTION DETAILS
13-19	DRAINAGE PLANS, PROFILES, DETAILS AND QUANTITIES
20-21	UTILITY PLANS
22	CONSTRUCTION AREA SIGNS
23-30	STAGE CONSTRUCTION AND TRAFFIC HANDLING PLANS
31	STAGE CONSTRUCTION DETAILS
32	STAGE CONSTRUCTION AND TRAFFIC HANDLING QUANTITIES
33-34	PAVEMENT DELINEATION AND SIGN PLANS
35	SIGN DETAILS
36	SIGN QUANTITIES AND DETAILS
37-38	SUMMARY OF QUANTITIES
39-41	EROSION CONTROL LEGEND AND PLANS
42-52	REVISED STANDARD PLANS

THE STANDARD PLANS LIST APPLICABLE TO THIS CONTRACT IS INCLUDED IN THE NOTICE TO BIDDERS AND SPECIAL PROVISIONS BOOK.

LOCATION MAP

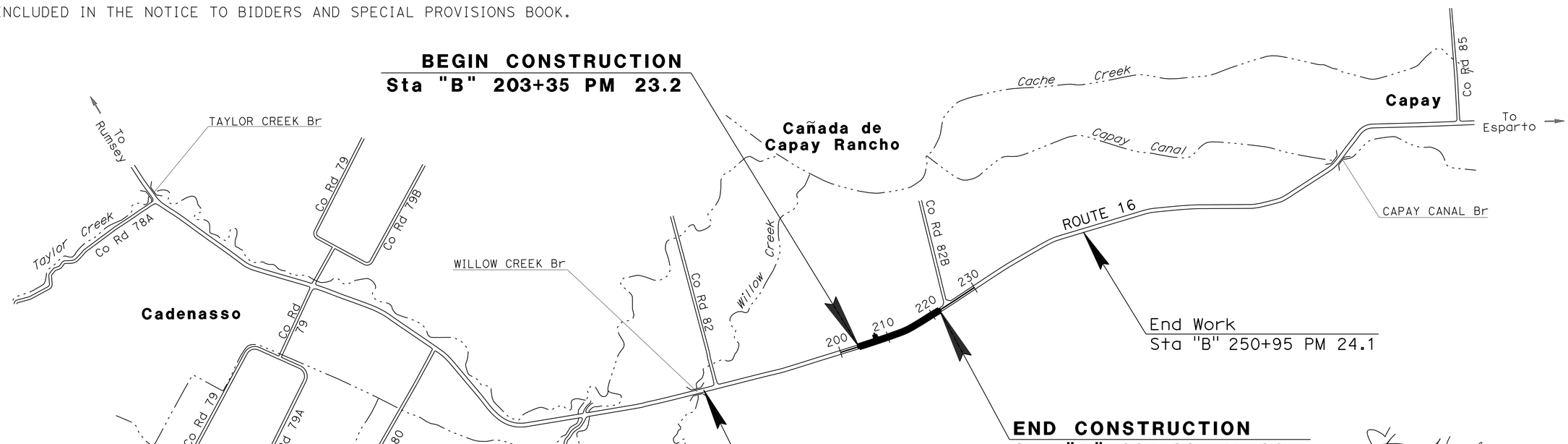

NO SCALE

PROJECT MANAGER SUTHA SUTHAHAR

DESIGN ENGINEER FERMIN BARRIGA

1-11-16
PROJECT ENGINEER DATE
REGISTERED CIVIL ENGINEER

January 11, 2016
PLANS APPROVAL DATE

REGISTERED PROFESSIONAL ENGINEER STEVEN P. HERYFORD No. C73705 Exp. 06-30-17 CIVIL STATE OF CALIFORNIA

THE STATE OF CALIFORNIA OR ITS OFFICERS OR AGENTS SHALL NOT BE RESPONSIBLE FOR THE ACCURACY OR COMPLETENESS OF SCANNED COPIES OF THIS PLAN SHEET.

THE CONTRACTOR SHALL POSSESS THE CLASS (OR CLASSES) OF LICENSE AS SPECIFIED IN THE "NOTICE TO BIDDERS."

CONTRACT No.	03-0C4714
PROJECT ID	0314000271

LAST REVISION 11-13-15

DATE PLOTTED => 04-FEB-2016
TIME PLOTTED => 08:26

Dist	COUNTY	ROUTE	POST MILES TOTAL PROJECT	SHEET No.	TOTAL SHEETS
03	Yol	16	23.2/23.5	2	52

REGISTERED CIVIL ENGINEER 1-11-16 DATE

1-11-16
PLANS APPROVAL DATE

REGISTERED PROFESSIONAL ENGINEER STEVEN P. HERYFORD No. C73705 Exp. 06-30-17 CIVIL STATE OF CALIFORNIA

THE STATE OF CALIFORNIA OR ITS OFFICERS OR AGENTS SHALL NOT BE RESPONSIBLE FOR THE ACCURACY OR COMPLETENESS OF SCANNED COPIES OF THIS PLAN SHEET.

NOTES:

1. DIMENSIONS OF THE PAVEMENT STRUCTURES (STRUCTURAL SECTIONS) ARE SUBJECT TO TOLERANCES SPECIFIED IN THE STANDARD SPECIFICATIONS.
2. SUPERELEVATIONS ARE SHOWN ON THE SUPERELEVATION DIAGRAMS.

ABBREVIATIONS:

HMA-A	HOT MIX ASPHALT (TYPE A)
RHMA-G	RUBBERIZED HOT MIX ASPHALT (GAP GRADED)
SE	SAFETY EDGE
S/C	SAWCUT LINE

DESIGN DESIGNATION

ADT (2020)	14,900	D	69%
ADT (2040)	22,100	T	8%
DHV (2040)	2.030	V	60 mph
ESAL(2040)	7,840,000	TI_{20}	11.5

PAVEMENT CLIMATE REGION

INLAND VALLEY

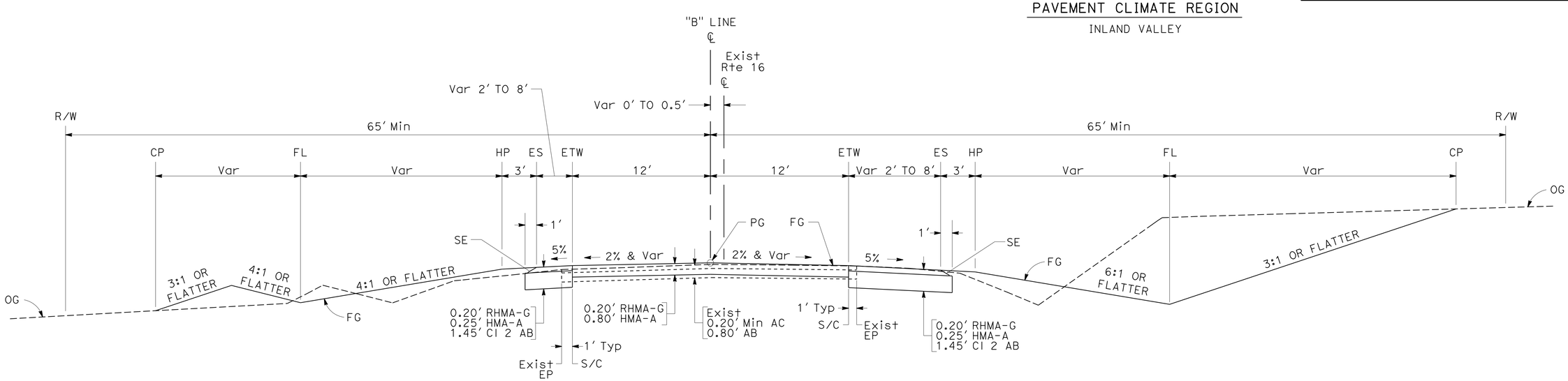

ROUTE 16

Sta "B" 203+55.00 TO Sta "B" 204+31.00

Sta "B" 220+00.00 TO Sta "B" 220+80.00

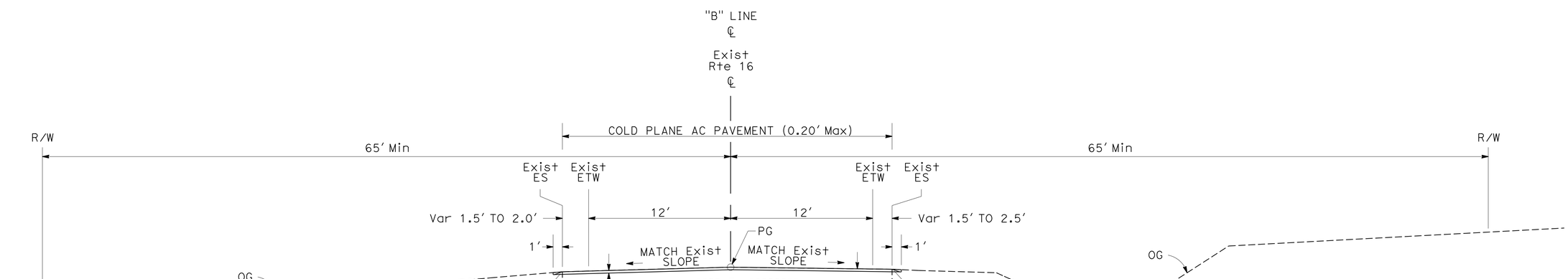

ROUTE 16

Sta "B" 203+35.00 TO Sta "B" 203+55.00

Sta "B" 220+80.00 TO Sta "B" 221+00.00

TYPICAL CROSS SECTIONS

NO SCALE

X-1

STATE OF CALIFORNIA - DEPARTMENT OF TRANSPORTATION
Caltrans® DIVISION OF ENGINEERING

FUNCTIONAL SUPERVISOR: FERMIN BARRIGA

CALCULATED-DESIGNED BY: STEVE HERYFORD
CHECKED BY: FERMIN BARRIGA

REVISED BY | DATE REVISED

LAST REVISION 11-16-15 | DATE PLOTTED => 12-JAN-2016 | TIME PLOTTED => 16:25

Dist	COUNTY	ROUTE	POST MILES TOTAL PROJECT	SHEET No.	TOTAL SHEETS
03	Yol	16	23.2/23.5	3	52

REGISTERED CIVIL ENGINEER 1-11-16 DATE

1-11-16
PLANS APPROVAL DATE

REGISTERED PROFESSIONAL ENGINEER STEVEN P. HERYFORD No. C73705 Exp. 06-30-17 CIVIL STATE OF CALIFORNIA

THE STATE OF CALIFORNIA OR ITS OFFICERS OR AGENTS SHALL NOT BE RESPONSIBLE FOR THE ACCURACY OR COMPLETENESS OF SCANNED COPIES OF THIS PLAN SHEET.

NOTES:

1. DIMENSIONS OF THE PAVEMENT STRUCTURES (STRUCTURAL SECTIONS) ARE SUBJECT TO TOLERANCES SPECIFIED IN THE STANDARD SPECIFICATIONS.
2. SUPERELEVATIONS ARE SHOWN ON THE SUPERELEVATION DIAGRAMS.

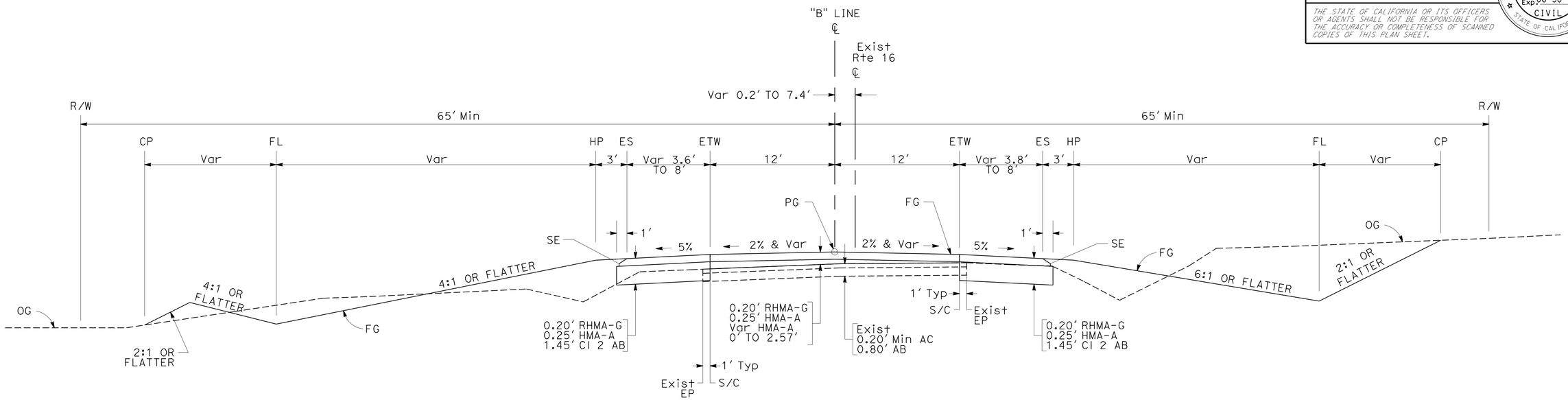

ROUTE 16

Sta "B" 204+31.00 TO Sta "B" 220+00.00

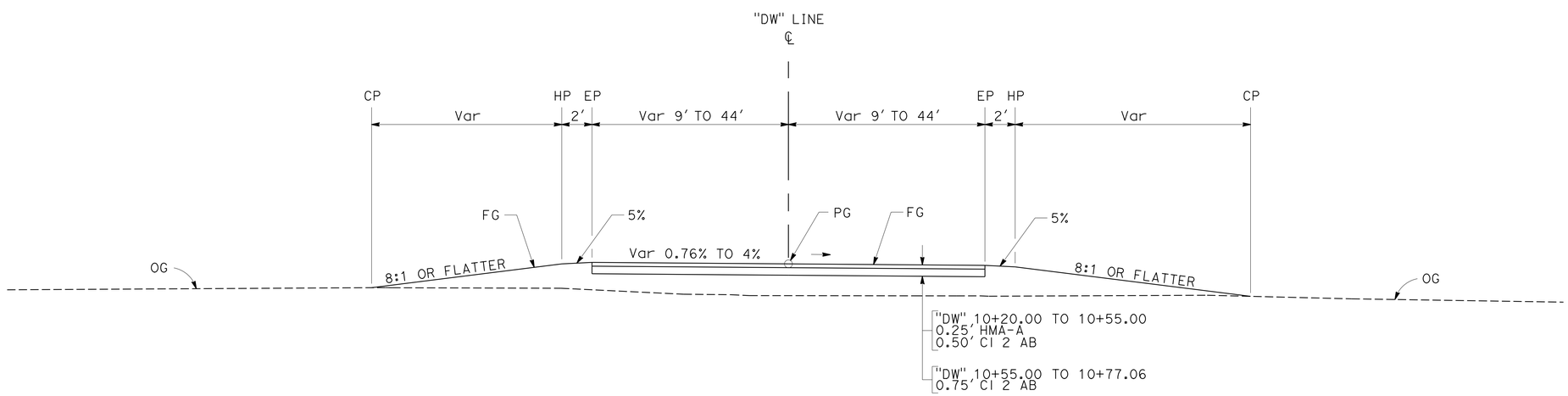

DRIVEWAY

(Sta "B" 207+25.00 Lt)

Sta "DW" 10+20.00 TO Sta "DW" 10+77.06

TYPICAL CROSS SECTIONS

NO SCALE

X-2

STATE OF CALIFORNIA - DEPARTMENT OF TRANSPORTATION
Caltrans® DIVISION OF ENGINEERING

FUNCTIONAL SUPERVISOR: FERMIN BARRIGA

CALCULATED-DESIGNED BY: STEVE HERYFORD
CHECKED BY: FERMIN BARRIGA

REVISED BY | DATE REVISED

LAST REVISION 12-03-15 | DATE PLOTTED => 12-JAN-2016 | TIME PLOTTED => 16:25

Dist	COUNTY	ROUTE	POST MILES TOTAL PROJECT	SHEET No.	TOTAL SHEETS
03	Yol	16	23.2/23.5	4	52

REGISTERED CIVIL ENGINEER 1-11-16 DATE

1-11-16
PLANS APPROVAL DATE

REGISTERED PROFESSIONAL ENGINEER STEVEN P. HERYFORD No. C73705 Exp. 06-30-17 CIVIL STATE OF CALIFORNIA

THE STATE OF CALIFORNIA OR ITS OFFICERS OR AGENTS SHALL NOT BE RESPONSIBLE FOR THE ACCURACY OR COMPLETENESS OF SCANNED COPIES OF THIS PLAN SHEET.

NOTES:

1. FOR COMPLETE PROJECT CONTROL AND MONUMENTATION DATA, SEE THE SURVEY RECORDS ON FILE IN THE SURVEYS DEPARTMENT AT THE DISTRICT OFFICE.
2. BEARINGS AND COORDINATES FOR THIS PROJECT ARE BASED ON THE CALIFORNIA COORDINATE SYSTEM OF 1983 (NAD83 EPOCH 1991.35), ZONE 402, U.S. SURVEY FOOT. THE CONTROL SURVEY WAS PERFORMED THROUGH EXISTING CORRIDOR CONTROL AND NEW CONTROL IN 2006. AFTER DIGITAL LEVELS WERE RUN, THROUGH THE TRAVERSED POINTS, A STARNET 3D ADJUSTMENT WAS APPLIED.
3. ELEVATIONS FOR THIS PROJECT ARE BASED ON THE NATIONAL GEODETIC VERTICAL DATUM OF 1929 (NGVD 1929).
4. IN THE EVENT GPS MACHINE CONTROL/GUIDANCE IS USED FOR THIS PROJECT, THE CONTRACTOR MUST CONTACT AND MEET WITH THE SURVEYS DEPARTMENT AT THE DISTRICT OFFICE TO OBTAIN THE CONTROL NECESSARY TO ESTABLISH A PROJECT CALIBRATION COMPATIBLE FOR ALL USERS.
5. CDOT MONUMENTS ARE BRASS DISKS IN CONCRETE, TYPICALLY WITH A 2" GALVANIZED PIPE.

ABBREVIATIONS

CDOT	CALIFORNIA DEPARTMENT OF TRANSPORTATION
CM	CONTROL MONUMENT

LEGEND

THIRD ORDER CONTROL STATION

CONTROL FOR DESIGN AND CONSTRUCTION

"B" LINE STATION	OFFSET (Ft)	ORDER	DESIGNATION	NAME	NORTHING	EASTING	ELEVATION (Ft)	DESCRIPTION
		3RD	CM 22.87	CONT2287	2018001.83	6533215.19	289.67	CDOT BRASS DISK IN Conc
		3RD	YOL-16-22.90	CONT2290	2018060.36	6533660.49	287.94	CDOT BRASS DISK
		3RD	K 629	K 629	2018100.16	6534251.39	267.98	BENCHMARK DISC IN Conc
		3RD	CM 23.04	CONT2304	2018100.64	6534487.67	261.67	#6 REBAR W/PUNCH
205+31.38	21.22′	3RD	CM 23.31	CONT2331	2018108.35	6535250.13	246.16	#6 REBAR W/PUNCH
213+37.00	28.64′	3RD	CM 23.47	CONT2347	2018171.42	6536055.88	244.13	#6 REBAR W/PUNCH
222+40.95	-25.14′	3RD	YOL-16-23.62	CONT2362	2018471.42	6536912.21	233.91	CDOT BRASS DISK
		3RD	CM 23.76	CONT2376	2018853.28	6538081.58	240.30	#6 REBAR W/PUNCH

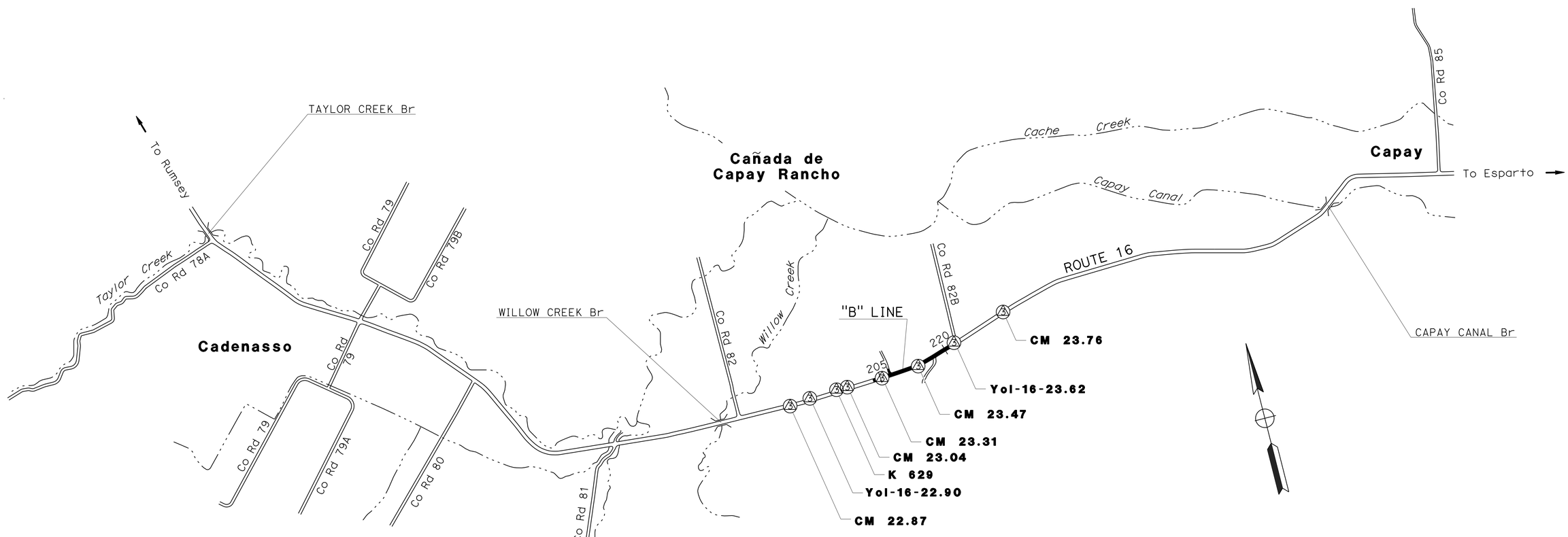

APPROVED FOR PROJECT CONTROL INFORMATION ONLY

PROJECT CONTROL

NO SCALE

PC-1

STATE OF CALIFORNIA - DEPARTMENT OF TRANSPORTATION
Caltrans DIVISION OF ENGINEERING

FUNCTIONAL SUPERVISOR: FERMIN BARRIGA
CALCULATED-DESIGNED BY: STEVE HERYFORD
CHECKED BY: GARY CUPLER
REVISED BY
DATE REVISED

LAST REVISION 11-03-15
DATE PLOTTED => 12-JAN-2016
TIME PLOTTED => 16:25

Dist	COUNTY	ROUTE	POST MILES TOTAL PROJECT	SHEET No.	TOTAL SHEETS
03	Yol	16	23.2/23.5	5	52

REGISTERED CIVIL ENGINEER 1-11-16 DATE

1-11-16
PLANS APPROVAL DATE

STEVEN P. HERYFORD No. C73705 Exp. 06-30-17 CIVIL STATE OF CALIFORNIA REGISTERED PROFESSIONAL ENGINEER

THE STATE OF CALIFORNIA OR ITS OFFICERS OR AGENTS SHALL NOT BE RESPONSIBLE FOR THE ACCURACY OR COMPLETENESS OF SCANNED COPIES OF THIS PLAN SHEET.

NOTES:

1. FOR ACCURATE RIGHT OF WAY DATA, CONTACT RIGHT OF WAY ENGINEERING AT THE DISTRICT OFFICE.
2. FOR CENTERLINE AND SHOULDER RUMBLE STRIP DETAILS, SEE CONSTRUCTION DETAILS SHEETS C-1 AND C-2.
3. FOR DRIVEWAY INTERSECTION DETAILS, SEE CONSTRUCTION DETAILS SHEET C-3.
4. FOR RHMA (GAP GRADED) CONFORM DETAILS, SEE CONSTRUCTION DETAILS SHEET C-4.

ABBREVIATIONS

HMA-A	HOT MIX ASPHALT (TYPE A)
RHMA-G	RUBBERIZED HOT MIX ASPHALT (GAP GRADED)
PTE	PERMIT TO ENTER

LEGEND

CONFORM AND COLD PLANE AC PAVEMENT LIMITS

REPLACE AC SURFACING

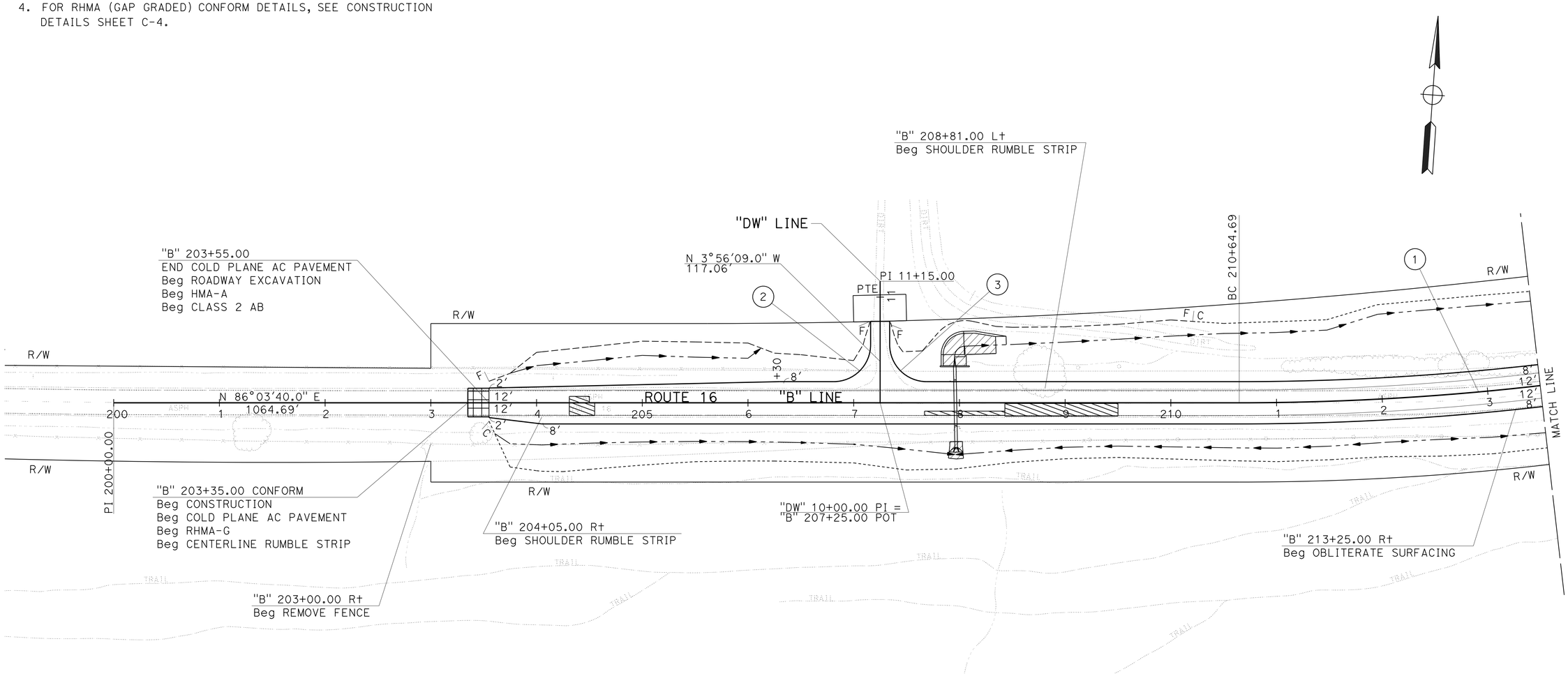

CURVE DATA

No. ⊕	R	Δ	T	L
1	2500′	13°07′17″	287.52′	572.53′
2	35′	89°59′49″	35.00′	54.98′
3	35′	90°00′11″	35.00′	54.98′

LAYOUT

SCALE: 1″ = 50′ **L-1**

STATE OF CALIFORNIA - DEPARTMENT OF TRANSPORTATION
Caltrans DIVISION OF ENGINEERING

FUNCTIONAL SUPERVISOR: FERMIN BARRIGA

CALCULATED-DESIGNED BY: JOSE LUIS VALDEZ
CHECKED BY: STEVE HERYFORD

REVISED BY
DATE REVISED

LAST REVISION 11-17-15
DATE PLOTTED => 12-JAN-2016
TIME PLOTTED => 16:25

Dist	COUNTY	ROUTE	POST MILES TOTAL PROJECT	SHEET No.	TOTAL SHEETS
03	Yol	16	23.2/23.5	6	52

REGISTERED CIVIL ENGINEER 1-11-16 DATE

1-11-16
PLANS APPROVAL DATE

REGISTERED PROFESSIONAL ENGINEER STEVEN P. HERYFORD No. C73705 Exp. 06-30-17 CIVIL STATE OF CALIFORNIA

THE STATE OF CALIFORNIA OR ITS OFFICERS OR AGENTS SHALL NOT BE RESPONSIBLE FOR THE ACCURACY OR COMPLETENESS OF SCANNED COPIES OF THIS PLAN SHEET.

NOTES:

1. FOR ACCURATE RIGHT OF WAY DATA, CONTACT RIGHT OF WAY ENGINEERING AT THE DISTRICT OFFICE.
2. FOR CENTERLINE AND SHOULDER RUMBLE STRIP DETAILS, SEE CONSTRUCTION DETAILS SHEETS C-1 AND C-2.
3. FOR RHMA (GAP GRADED) CONFORM DETAILS, SEE CONSTRUCTION DETAILS SHEET C-4.

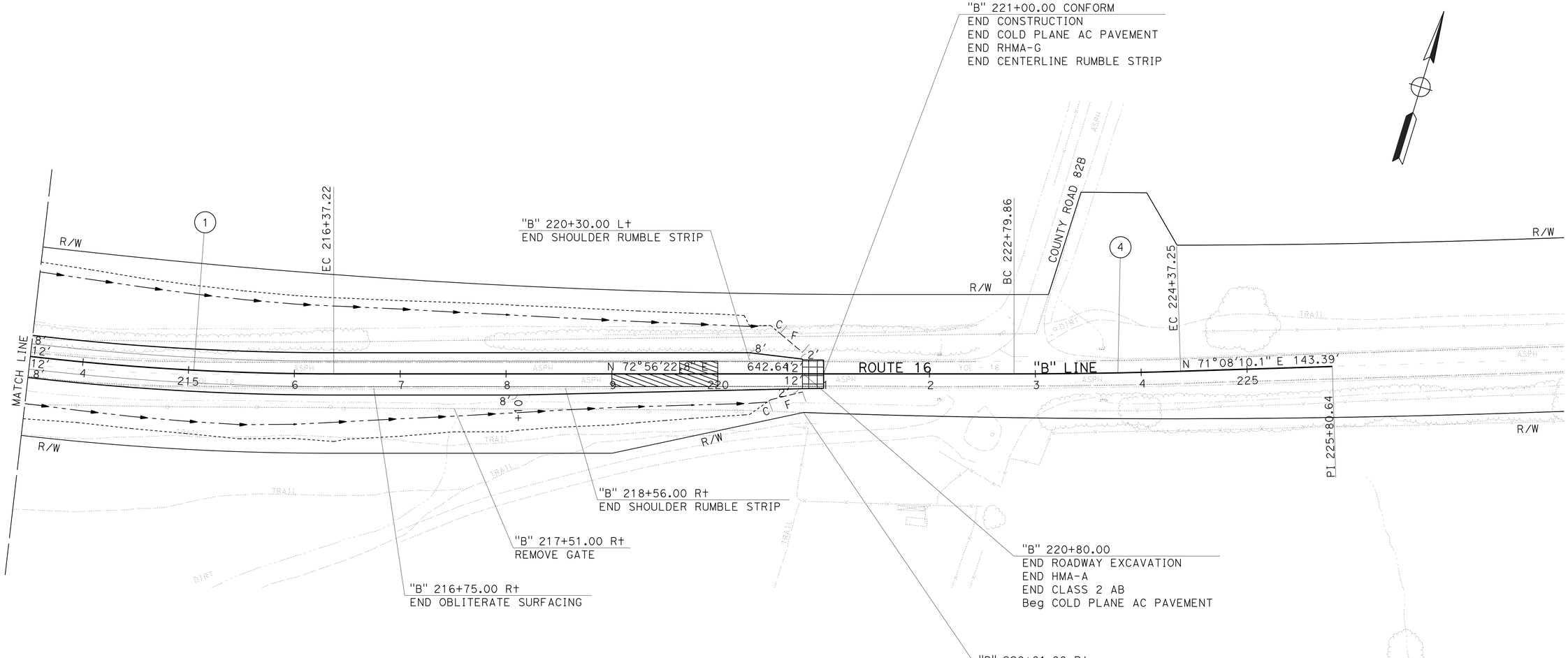

CURVE DATA

No. ⊕	R	Δ	T	L
①	2500′	13°07′17"	287.52′	572.53′
④	5000′	01°48′13"	78.70′	157.39′

LAYOUT

SCALE: 1" = 50′ **L-2**

STATE OF CALIFORNIA - DEPARTMENT OF TRANSPORTATION
Caltrans® DIVISION OF ENGINEERING

FUNCTIONAL SUPERVISOR: FERMIN BARRIGA
CALCULATED-DESIGNED BY: JOSE LUIS VALDEZ
CHECKED BY: STEVE HERYFORD
REVISED BY / DATE REVISED

LAST REVISION 11-17-15
DATE PLOTTED => 12-JAN-2016
TIME PLOTTED => 16:25

Dist	COUNTY	ROUTE	POST MILES TOTAL PROJECT	SHEET No.	TOTAL SHEETS
03	Yol	16	23.2/23.5	7	52

REGISTERED CIVIL ENGINEER 1-11-16 DATE

1-11-16
PLANS APPROVAL DATE

REGISTERED PROFESSIONAL ENGINEER STEVEN P. HERYFORD No. C73705 Exp. 06-30-17 CIVIL STATE OF CALIFORNIA

THE STATE OF CALIFORNIA OR ITS OFFICERS OR AGENTS SHALL NOT BE RESPONSIBLE FOR THE ACCURACY OR COMPLETENESS OF SCANNED COPIES OF THIS PLAN SHEET.

NOTE:

1. ALL ELEVATIONS ARE BASED ON NGVD 1929.
2. EARTHWORK FOR "DW" LINE 10+00 TO 10+45 INCLUDED IN "B" LINE.

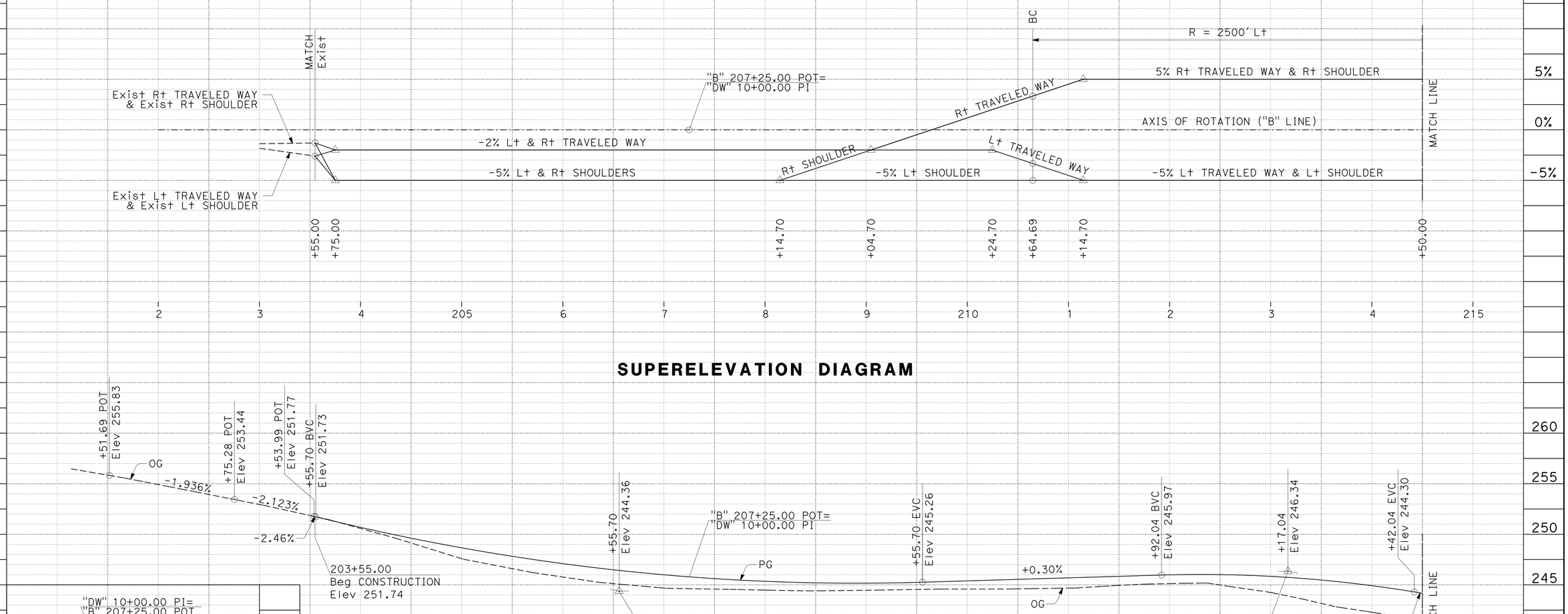

SUPERELEVATION DIAGRAM

PROFILE

ROUTE 16
"B" LINE

PROFILE AND SUPERELEVATION DIAGRAM

SCALE: Horiz: 1" = 50'
Vert: 1" = 5'

PS-1

STATION	10	1	4	205	6	7	8	9	210	1	2	3	4	215	TOTAL
CY Exc	12							4,402							4,414
CY Emb	27	SEE NOTE 2						4,173							4,200

STATE OF CALIFORNIA - DEPARTMENT OF TRANSPORTATION
Caltrans DIVISION OF ENGINEERING

FUNCTIONAL SUPERVISOR: FERMIN BARRIGA
CALCULATED-DESIGNED BY: JOSE LUIS VALDEZ
CHECKED BY: STEVE HERYFORD
REVISED BY / DATE REVISED

LAST REVISION 12-04-15
DATE PLOTTED => 12-JAN-2016
TIME PLOTTED => 16:25

Dist	COUNTY	ROUTE	POST MILES TOTAL PROJECT	SHEET No.	TOTAL SHEETS
03	Yol	16	23.2/23.5	8	52

REGISTERED CIVIL ENGINEER 1-11-16 DATE

1-11-16
PLANS APPROVAL DATE

REGISTERED PROFESSIONAL ENGINEER STEVEN P. HERYFORD No. C73705 Exp. 06-30-17 CIVIL STATE OF CALIFORNIA

THE STATE OF CALIFORNIA OR ITS OFFICERS OR AGENTS SHALL NOT BE RESPONSIBLE FOR THE ACCURACY OR COMPLETENESS OF SCANNED COPIES OF THIS PLAN SHEET.

NOTE:

1. ALL ELEVATIONS ARE BASED ON NGVD 1929.

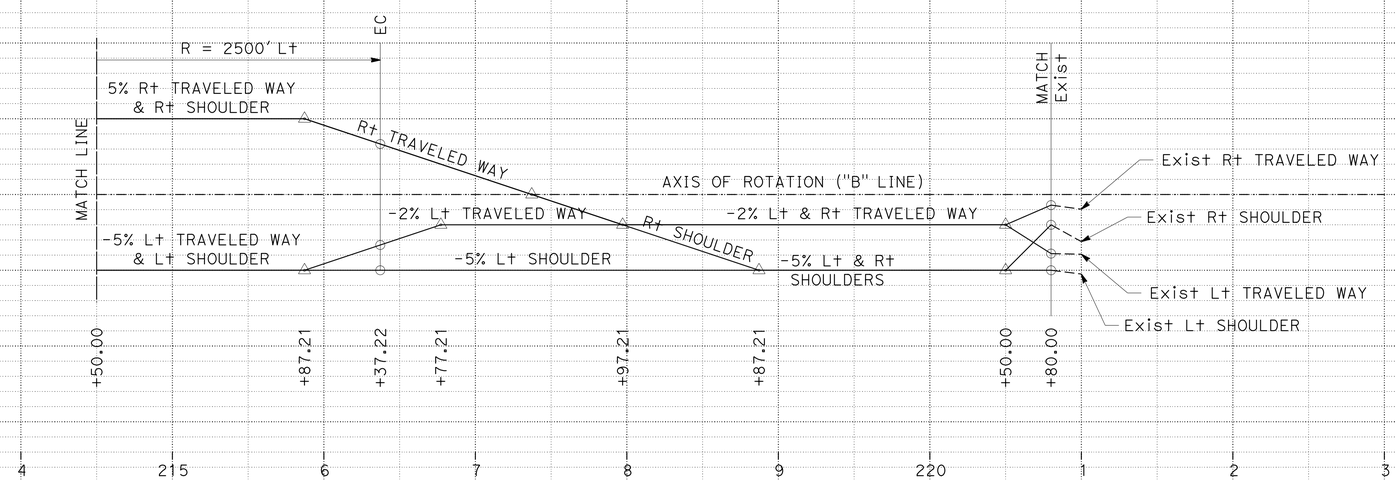

SUPERELEVATION DIAGRAM

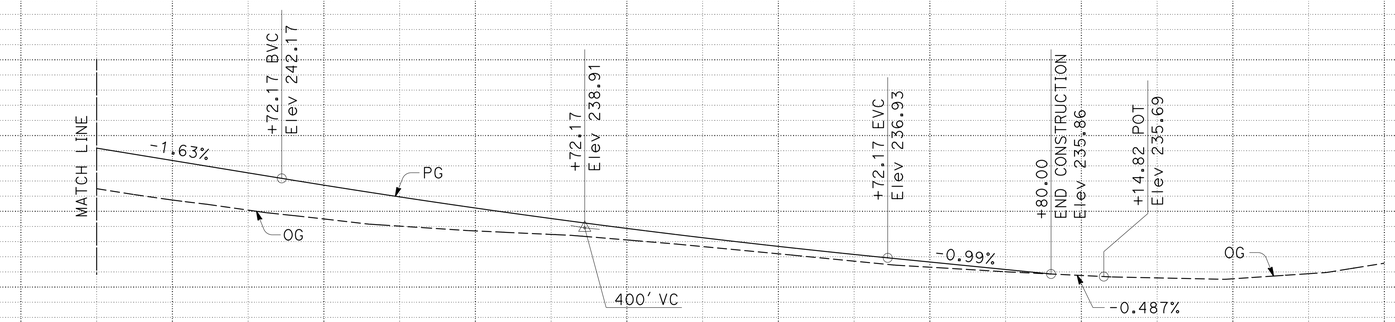

PROFILE

ROUTE 16

"B" LINE

PROFILE AND SUPERELEVATION DIAGRAM

SCALE: Horiz: 1" = 50'
Vert: 1" = 5'

PS-2

STATION		4	215	6	7	8	9	220	1	2	3	TOTAL
CY	Exc			1,979								1,979
	Emb			1,740								1,740

STATE OF CALIFORNIA - DEPARTMENT OF TRANSPORTATION
Caltrans DIVISION OF ENGINEERING

FUNCTIONAL SUPERVISOR: FERMIN BARRIGA
CALCULATED-DESIGNED BY: JOSE LUIS VALDEZ
CHECKED BY: STEVE HERYFORD
REVISED BY / DATE REVISED

LAST REVISION 12-04-15
DATE PLOTTED => 12-JAN-2016
TIME PLOTTED => 16:25

Dist	COUNTY	ROUTE	POST MILES TOTAL PROJECT	SHEET No.	TOTAL SHEETS
03	Yol	16	23.2/23.5	9	52

REGISTERED CIVIL ENGINEER 1-11-16 DATE

1-11-16
PLANS APPROVAL DATE

REGISTERED PROFESSIONAL ENGINEER STEVEN P. HERYFORD No. C73705 Exp. 06-30-17 CIVIL STATE OF CALIFORNIA

THE STATE OF CALIFORNIA OR ITS OFFICERS OR AGENTS SHALL NOT BE RESPONSIBLE FOR THE ACCURACY OR COMPLETENESS OF SCANNED COPIES OF THIS PLAN SHEET.

NOTES:

1. CENTERLINE RUMBLE STRIPS AS SHOWN ON THE PLANS WILL CONTINUE THROUGH LOCATIONS WITH PRIVATE DRIVEWAYS UNLESS OTHERWISE NOTED ON THE PLANS. FOR DRIVEWAY APPROACH DETAILS, SEE CONSTRUCTION DETAILS SHEET C-2.
2. EXISTING UTILITY FACILITIES HAVE NOT BEEN PLOTTED ON THESE PLANS.
3. CENTERLINE RUMBLE STRIP MUST BE CONSTRUCTED PRIOR TO INSTALLING THERMOPLASTIC TRAFFIC STRIPING.
4. SEE LAYOUT SHEETS L-1 AND L-2 FOR LAYOUT OF CENTERLINE RUMBLE STRIPS.

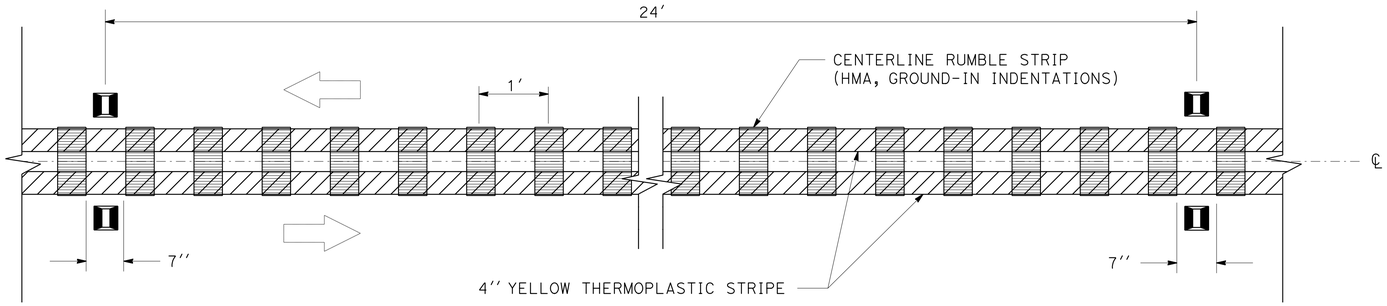

DETAIL 22 WITH CENTERLINE RUMBLE STRIPS

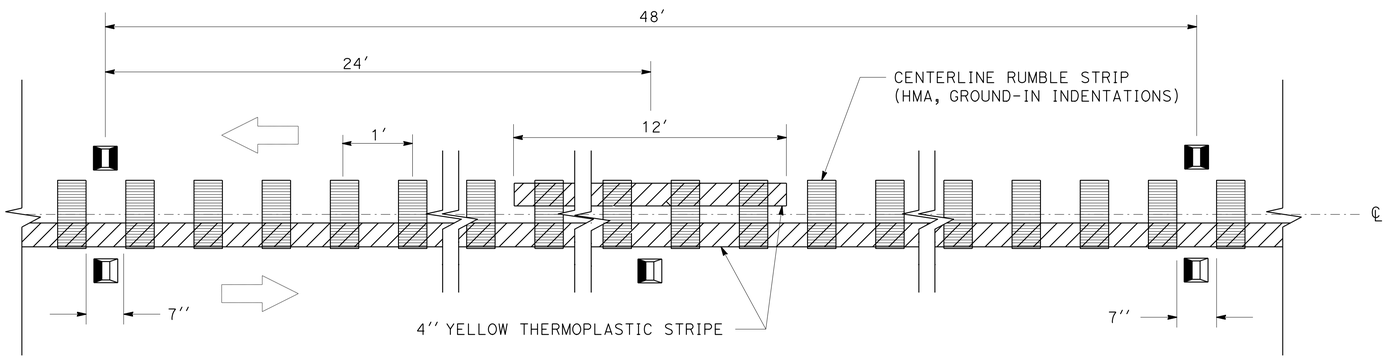

DETAIL 19 WITH CENTERLINE RUMBLE STRIPS

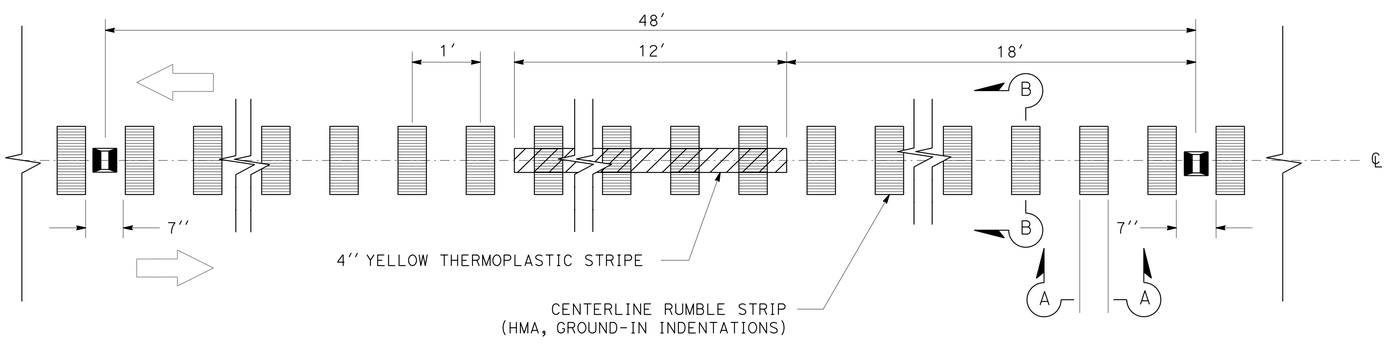

DETAIL 6 WITH CENTERLINE RUMBLE STRIPS

LEGEND

- DIRECTION OF TRAVEL
- PAVEMENT MARKER (RETROREFLECTIVE), TYPE D, YELLOW
- PAVEMENT MARKER (RETROREFLECTIVE), TYPE H, YELLOW
- RUMBLE STRIP

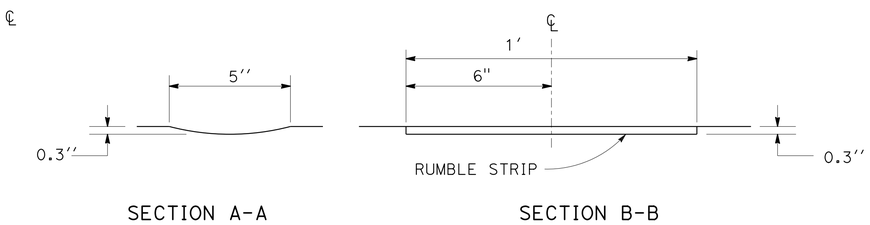

CENTERLINE RUMBLE STRIP (HMA, GROUND-IN INDENTATIONS) DETAILS

CONSTRUCTION DETAILS

NO SCALE

C-1

STATE OF CALIFORNIA - DEPARTMENT OF TRANSPORTATION
Caltrans DIVISION OF ENGINEERING

FUNCTIONAL SUPERVISOR: FERMIN BARRIGA
CALCULATED-DESIGNED BY: STEVE HERYFORD
CHECKED BY: JOSE LUIS VALDEZ
REVISED BY / DATE REVISED

LAST REVISION 09-23-15 | DATE PLOTTED => 12-JAN-2016 | TIME PLOTTED => 16:25

Dist	COUNTY	ROUTE	POST MILES TOTAL PROJECT	SHEET No.	TOTAL SHEETS
03	Yol	16	23.2/23.5	10	52

REGISTERED CIVIL ENGINEER 1-11-16 DATE

1-11-16
PLANS APPROVAL DATE

REGISTERED PROFESSIONAL ENGINEER
STEVEN P. HERYFORD
No. C73705
Exp. 06-30-17
CIVIL
STATE OF CALIFORNIA

THE STATE OF CALIFORNIA OR ITS OFFICERS OR AGENTS SHALL NOT BE RESPONSIBLE FOR THE ACCURACY OR COMPLETENESS OF SCANNED COPIES OF THIS PLAN SHEET.

NOTES:

1. EXISTING UTILITY FACILITIES HAVE NOT BEEN PLOTTED ON THESE PLANS.
2. FOR CENTERLINE RUMBLE STRIP DETAILS, SEE CONSTRUCTION DETAILS SHEET C-1.
3. FOR SHOULDER RUMBLE STRIP DETAILS, SEE 2010 STANDARD PLAN A40B.
4. SEE LAYOUT SHEETS L-1 AND L-2 FOR LAYOUT OF CENTERLINE AND SHOULDER RUMBLE STRIPS.

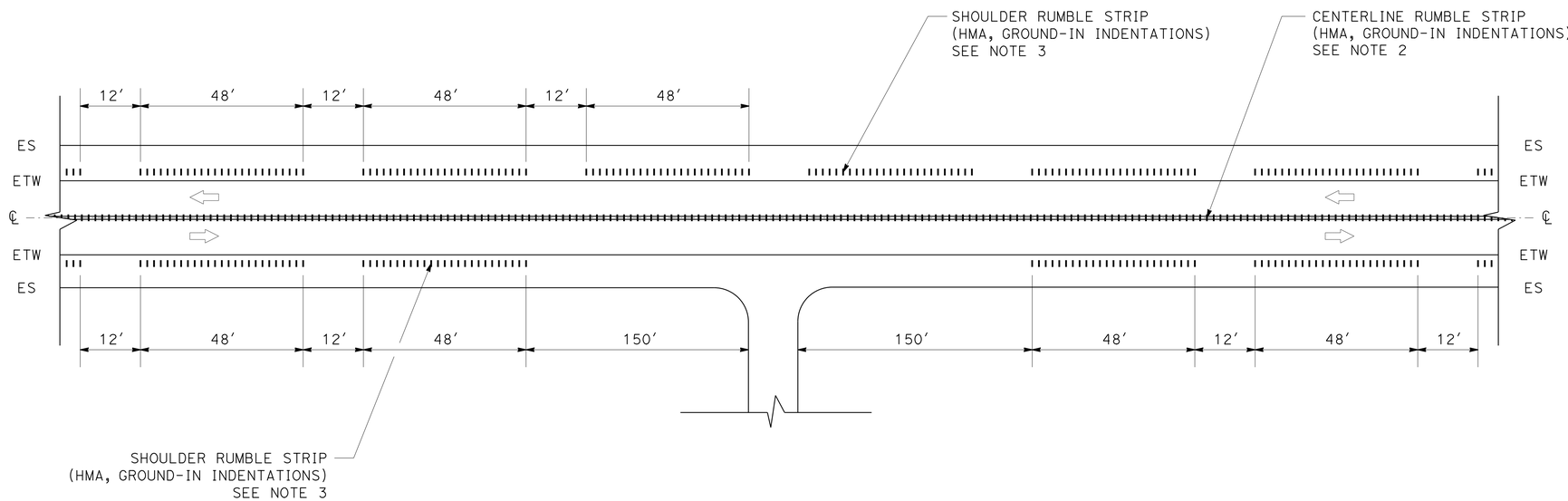

CENTERLINE AND SHOULDER RUMBLE STRIPS AT DRIVEWAY APPROACH

CONSTRUCTION DETAILS

NO SCALE

C-2

STATE OF CALIFORNIA - DEPARTMENT OF TRANSPORTATION
Caltrans® DIVISION OF ENGINEERING

FUNCTIONAL SUPERVISOR: FERMIN BARRIGA
CALCULATED-DESIGNED BY: JOSE LUIS VALDEZ
CHECKED BY: STEVE HERYFORD
REVISED BY
DATE REVISED

LAST REVISION 11-19-15
DATE PLOTTED => 12-JAN-2016
TIME PLOTTED => 16:25

Dist	COUNTY	ROUTE	POST MILES TOTAL PROJECT	SHEET No.	TOTAL SHEETS
03	Yol	16	23.2/23.5	11	52

REGISTERED CIVIL ENGINEER 1-11-16 DATE

1-11-16
PLANS APPROVAL DATE

REGISTERED PROFESSIONAL ENGINEER STEVEN P. HERYFORD No. C73705 Exp. 06-30-17 CIVIL STATE OF CALIFORNIA

THE STATE OF CALIFORNIA OR ITS OFFICERS OR AGENTS SHALL NOT BE RESPONSIBLE FOR THE ACCURACY OR COMPLETENESS OF SCANNED COPIES OF THIS PLAN SHEET.

NOTES:

1. FOR ACCURATE RIGHT OF WAY DATA, CONTACT RIGHT OF WAY ENGINEERING AT THE DISTRICT OFFICE.

ABBREVIATIONS

PTE PERMIT TO ENTER

LEGEND

STATION
OFFSET
ELEVATION

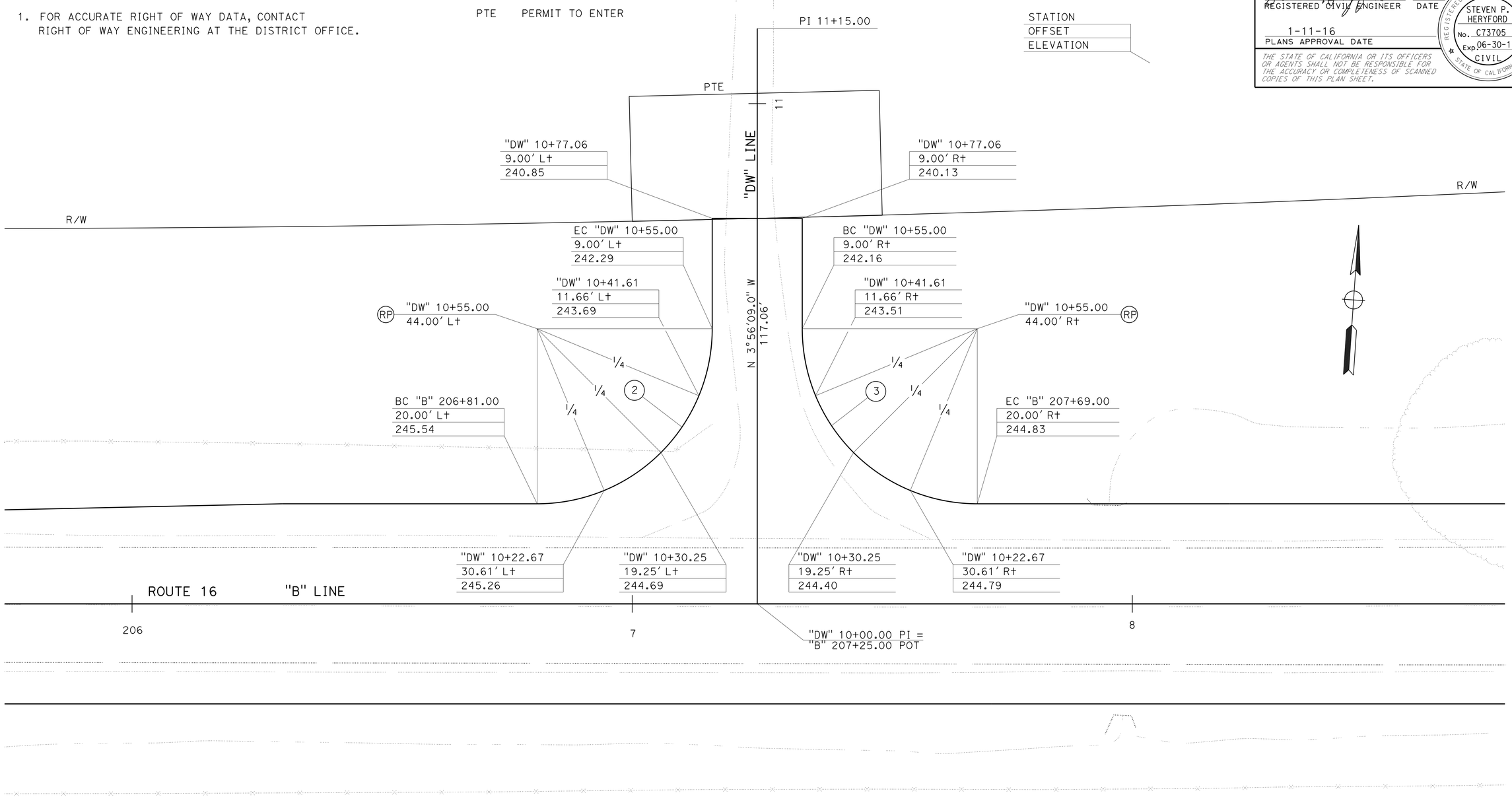

"DW" INTERSECTION DETAILS

CURVE DATA

No. ⊕	R	Δ	T	L
2	35′	89°59′49″	35.00′	54.98′
3	35′	90°00′11″	35.00′	54.98′

CONSTRUCTION DETAILS

SCALE: 1″ = 10′

C-3

STATE OF CALIFORNIA - DEPARTMENT OF TRANSPORTATION
DIVISION OF ENGINEERING

FUNCTIONAL SUPERVISOR: FERMIN BARRIGA
CALCULATED-DESIGNED BY: JOSE LUIS VALDEZ
CHECKED BY: STEVE HERYFORD
REVISED BY
DATE REVISED

LAST REVISION 11-03-15
DATE PLOTTED => 12-JAN-2016
TIME PLOTTED => 16:25

Dist	COUNTY	ROUTE	POST MILES TOTAL PROJECT	SHEET No.	TOTAL SHEETS
03	Yol	16	23.2/23.5	12	52

REGISTERED CIVIL ENGINEER 1-11-16 DATE

1-11-16
PLANS APPROVAL DATE

REGISTERED PROFESSIONAL ENGINEER STEVEN P. HERYFORD No. C73705 Exp. 06-30-17 CIVIL STATE OF CALIFORNIA

THE STATE OF CALIFORNIA OR ITS OFFICERS OR AGENTS SHALL NOT BE RESPONSIBLE FOR THE ACCURACY OR COMPLETENESS OF SCANNED COPIES OF THIS PLAN SHEET.

NOTES:

1. FOR RHMA (GAP GRADED) CONFORM LOCATIONS, SEE LAYOUT SHEETS L-1 AND L-2.

ABBREVIATIONS

HMA-A	HOT MIX ASPHALT (TYPE A)
RHMA-G	RUBBERIZED HOT MIX ASPHALT (GAP GRADED)

LEGEND

COLD PLANE AC PAVEMENT

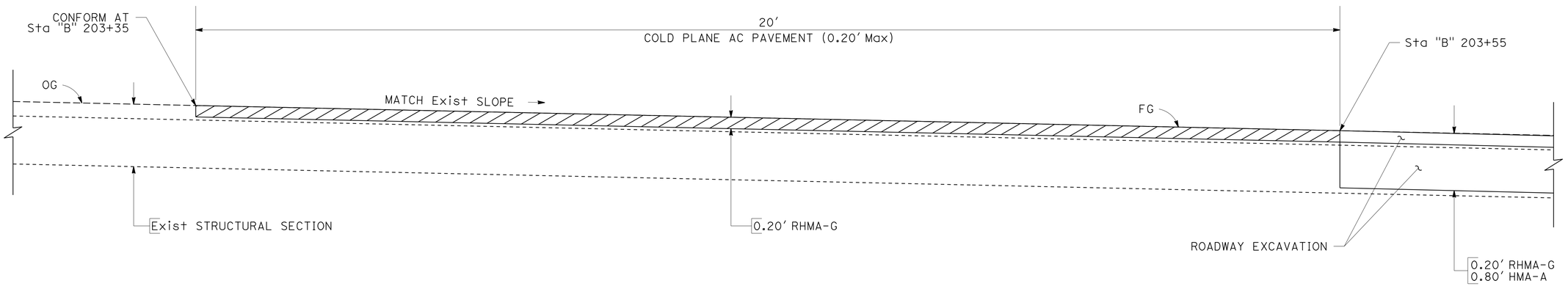

COLD PLANE AC PAVEMENT DETAIL 1 - RHMA (GAP GRADED)

FROM Sta "B" 203+35 TO Sta "B" 203+55

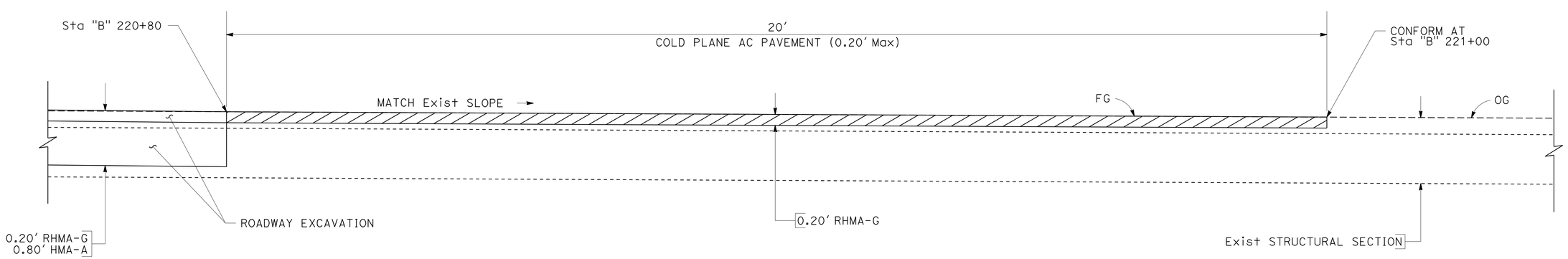

COLD PLANE AC PAVEMENT DETAIL 2 - RHMA (GAP GRADED)

FROM Sta "B" 220+80 TO Sta "B" 221+00

CONSTRUCTION DETAILS

NO SCALE

C-4

STATE OF CALIFORNIA - DEPARTMENT OF TRANSPORTATION
Caltrans® DIVISION OF ENGINEERING

FUNCTIONAL SUPERVISOR: FERMIN BARRIGA

CALCULATED-DESIGNED BY: JOSE LUIS VALDEZ
CHECKED BY: STEVE HERYFORD

REVISED BY | DATE REVISED

LAST REVISION 12-08-15 | DATE PLOTTED => 12-JAN-2016 | TIME PLOTTED => 16:25

Dist	COUNTY	ROUTE	POST MILES TOTAL PROJECT	SHEET No.	TOTAL SHEETS
03	Yol	16	23.2/23.5	13	52

Clark W. Townsend 1-11-16
REGISTERED CIVIL ENGINEER DATE

1-11-16
PLANS APPROVAL DATE

REGISTERED PROFESSIONAL ENGINEER CLARK W. TOWNSEND No. 47921 Exp. 12-31-17 CIVIL STATE OF CALIFORNIA

THE STATE OF CALIFORNIA OR ITS OFFICERS OR AGENTS SHALL NOT BE RESPONSIBLE FOR THE ACCURACY OR COMPLETENESS OF SCANNED COPIES OF THIS PLAN SHEET.

NOTE:

1. FOR ACCURATE RIGHT OF WAY DATA, CONTACT RIGHT OF WAY ENGINEERING AT THE DISTRICT OFFICE.

DRAINAGE ABBREVIATIONS

SPCHW = SINGLE PIPE CULVERT HEADWALL
CC = CONCRETE COLLAR
M-C = MARKER (CULVERT)
PTE = PERMIT TO ENTER

LEGEND

RSP (FACING, METHOD B)

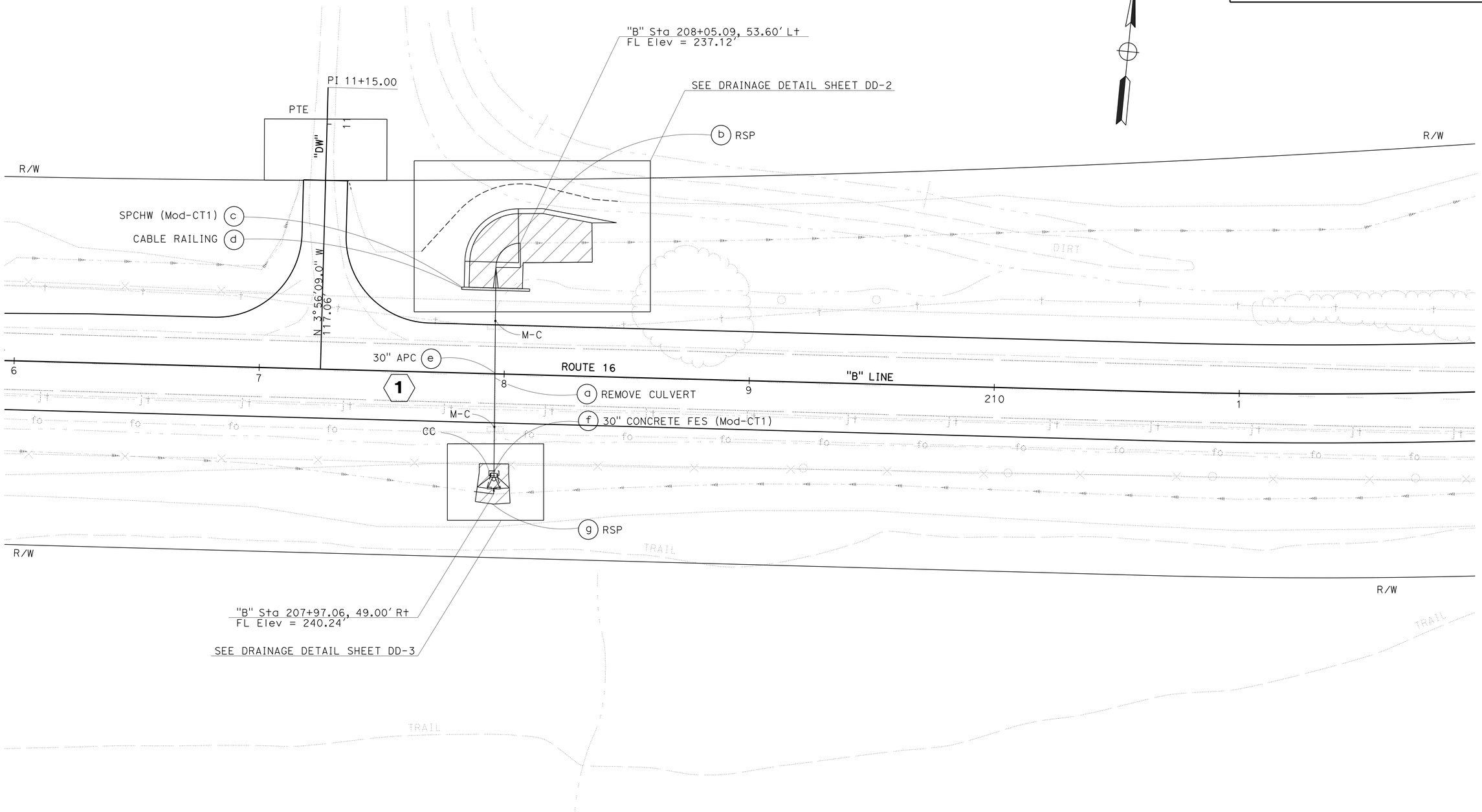

APPROVED FOR DRAINAGE WORK ONLY

DRAINAGE PLAN

SCALE: 1" = 20' **D-1**

STATE OF CALIFORNIA - DEPARTMENT OF TRANSPORTATION
Caltrans® DIVISION OF ENGINEERING HYDRAULICS

FUNCTIONAL SUPERVISOR: DENNIS JAGODA
CALCULATED-DESIGNED BY: CLARK W. TOWNSEND
CHECKED BY: GURDEEP S. BHATTAL
REVISED BY
DATE REVISED

LAST REVISION 01-11-16
DATE PLOTTED => 12-JAN-2016
TIME PLOTTED => 16:25

Dist	COUNTY	ROUTE	POST MILES TOTAL PROJECT	SHEET No.	TOTAL SHEETS
03	Yol	16	23.2/23.5	14	52

Clark W. Townsend 1-11-16
REGISTERED CIVIL ENGINEER DATE

1-11-16
PLANS APPROVAL DATE

REGISTERED PROFESSIONAL ENGINEER CLARK W. TOWNSEND No. 47921 Exp. 12-31-17 CIVIL STATE OF CALIFORNIA

THE STATE OF CALIFORNIA OR ITS OFFICERS OR AGENTS SHALL NOT BE RESPONSIBLE FOR THE ACCURACY OR COMPLETENESS OF SCANNED COPIES OF THIS PLAN SHEET.

NOTES:
1. VERTICAL DATUM = NGVD 1929.
2. UTILITY LOCATIONS ARE APPROXIMATE ONLY.
CONTRACTOR TO VERIFY ALL POTENTIAL CONFLICTS PRIOR TO CONSTRUCTION

DRAINAGE ABBREVIATIONS
M-C = MARKER (CULVERT)

LEGEND
RSP (FACING, METHOD B)

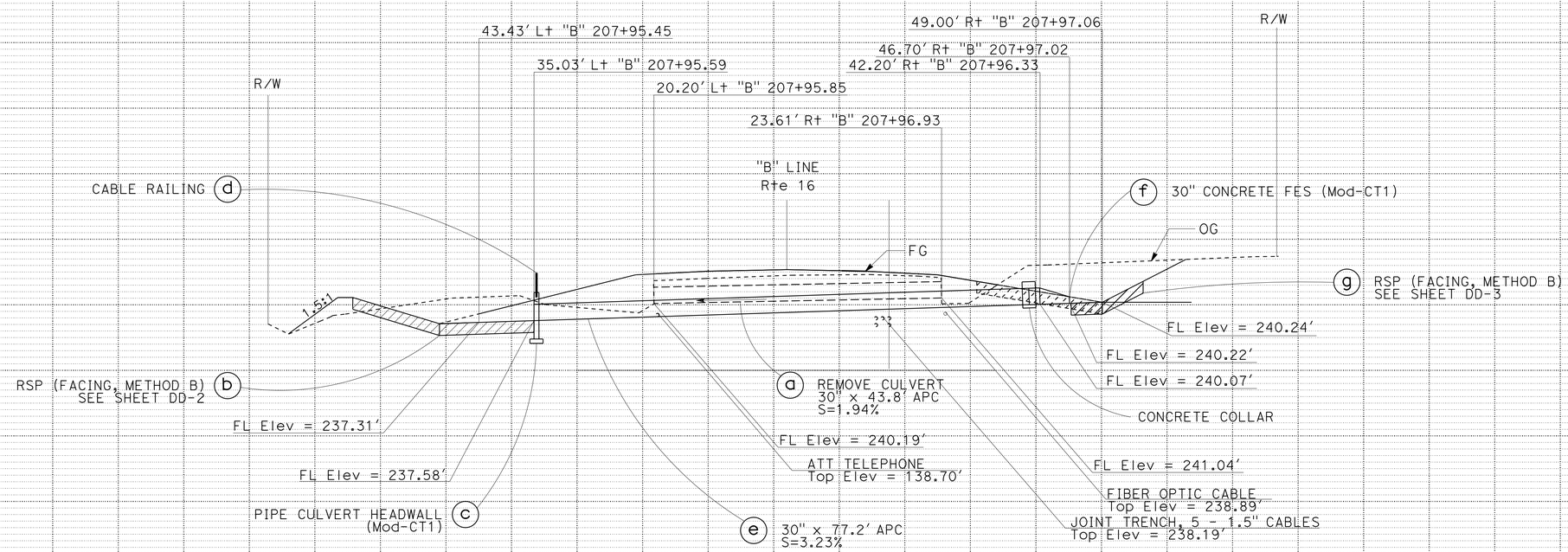

DRAINAGE SYSTEM No. (1)

207+96.20
Skew = -0°59'52.2"

DRAINAGE PROFILES

SCALE: Horiz 1" = 10'
Vert 1" = 10'

DP-1

STATE OF CALIFORNIA - DEPARTMENT OF TRANSPORTATION
Caltrans
DIVISION OF ENGINEERING
HYDRAULICS

FUNCTIONAL SUPERVISOR: DENNIS JAGODA
CALCULATED-DESIGNED BY: CLARK W. TOWNSEND
CHECKED BY: GURDEEP S. BHATTAL
REVISED BY
DATE REVISED

LAST REVISION 01-11-16
DATE PLOTTED => 12-JAN-2016
TIME PLOTTED => 16:25

Dist	COUNTY	ROUTE	POST MILES TOTAL PROJECT	SHEET No.	TOTAL SHEETS
03	Yol	16	23.2/23.5	15	52

Clark W. Townsend 1-11-16
REGISTERED CIVIL ENGINEER DATE

1-11-16
PLANS APPROVAL DATE

REGISTERED PROFESSIONAL ENGINEER
CLARK W. TOWNSEND
No. 47921
Exp. 12-31-17
CIVIL
STATE OF CALIFORNIA

THE STATE OF CALIFORNIA OR ITS OFFICERS OR AGENTS SHALL NOT BE RESPONSIBLE FOR THE ACCURACY OR COMPLETENESS OF SCANNED COPIES OF THIS PLAN SHEET.

LEGEND

RSP (FACING, METHOD B)

ABBREVIATIONS

GB = GRADE BRAKE

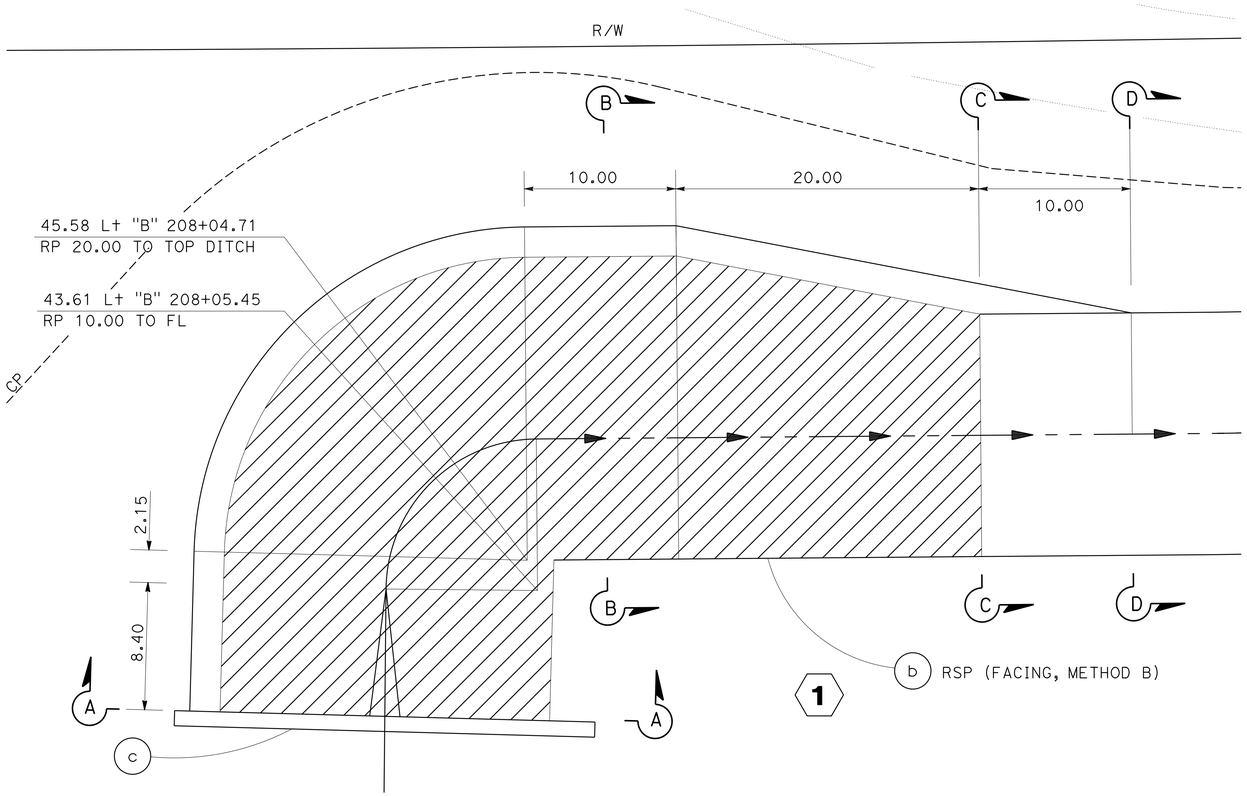

PLAN

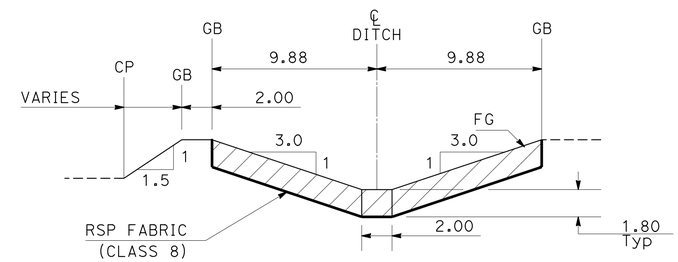

SECTION A-A

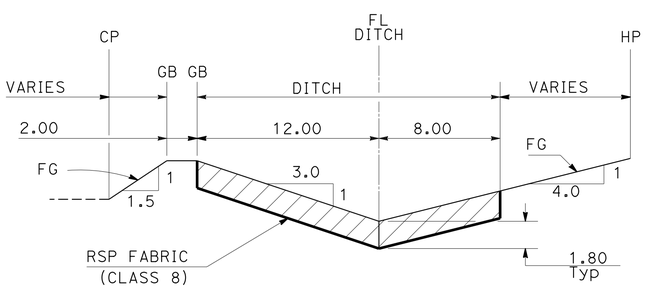

SECTION B-B

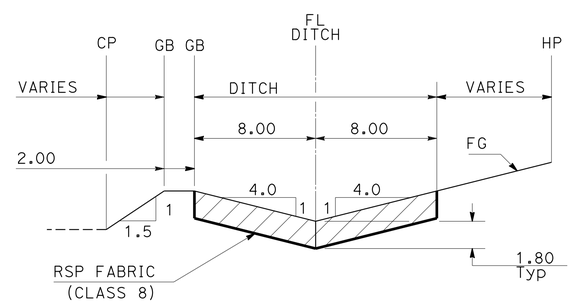

SECTION C-C

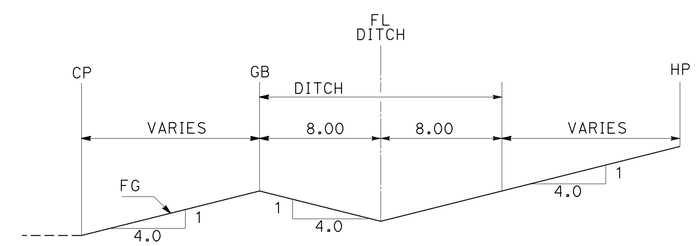

SECTION D-D

OUTLET GRADING AND RSP

1 b

DRAINAGE DETAILS

NO SCALE

DD-1

STATE OF CALIFORNIA - DEPARTMENT OF TRANSPORTATION
Caltrans
DIVISION OF ENGINEERING
HYDRAULICS

FUNCTIONAL SUPERVISOR: DENNIS JAGODA
CALCULATED-DESIGNED BY: GURDEEP S. BHATTAL
CHECKED BY: CLARK W. TOWNSEND
REVISED BY
DATE REVISED

LAST REVISION 01-11-16
DATE PLOTTED => 12-JAN-2016
TIME PLOTTED => 16:25

Dist	COUNTY	ROUTE	POST MILES TOTAL PROJECT	SHEET No.	TOTAL SHEETS
03	Yol	16	23.2/23.5	16	52

Clark W. Townsend 1-11-16
REGISTERED CIVIL ENGINEER DATE

1-11-16
PLANS APPROVAL DATE

REGISTERED PROFESSIONAL ENGINEER CLARK W. TOWNSEND No. 47921 Exp. 12-31-17 CIVIL STATE OF CALIFORNIA

THE STATE OF CALIFORNIA OR ITS OFFICERS OR AGENTS SHALL NOT BE RESPONSIBLE FOR THE ACCURACY OR COMPLETENESS OF SCANNED COPIES OF THIS PLAN SHEET.

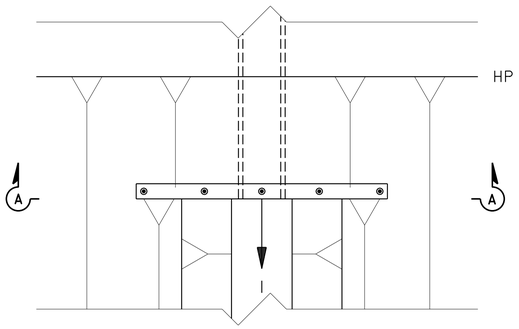

PLAN

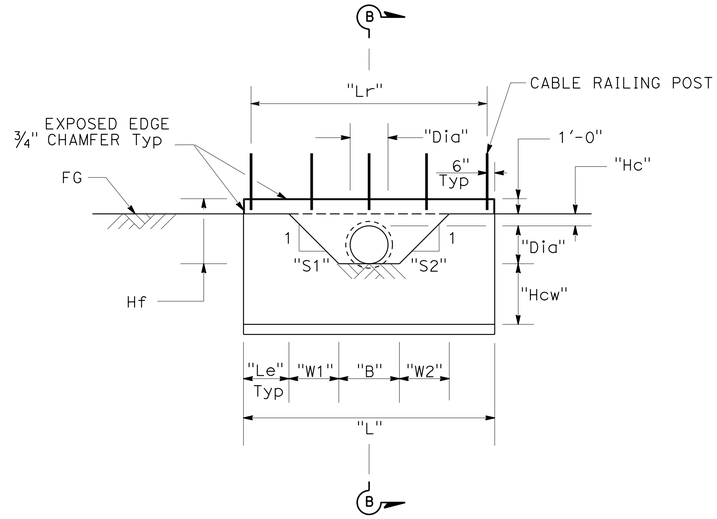

SECTION A-A

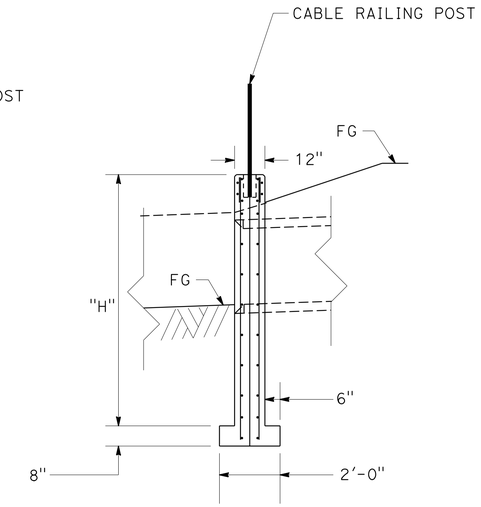

SECTION B-B WITH CABLE RAILING

DRAINAGE ABBREVIATIONS

B = BOTTOM WIDTH OF CHANNEL
Le = HW EMBEDMENT LENGTH
Hc = HEIGHT OF COVER
Hcw = HEIGHT OF CUTOFF WALL
Hf = HEIGHT OF MAXIMUM FALL
S1 = LEFT SIDE SLOPE (H:V)
S2 = RIGHT SIDE SLOPE (H:V)
W1 = WIDTH OF LEFT CHANNEL BANK
W2 = WIDTH OF RIGHT CHANNEL BANK

DS	DU	"H"	"Hf"	"Le"	"S1"	"W1"	"B"	"S2"	"W2"	"L"	"Lr"	"Hc"	"Dia"	"Hcw"	Conc	Steel
		FT	FT	FT	FT/FT	FT	FT	FT/FT	FT	FT	FT	IN	IN	FT	CY	LB
1	c	7.09	4.30	3.00	3.0	9.88	2.00	3.0	9.88	27.75	26.75	9.5	30	2.80	8.48	642

NOTES:

1. NO DEDUCTION MADE IN QUANTITIES FOR THICKNESS OF PIPE WALLS.
2. ALL REINFORCING STEEL SHALL BE #4 BARS.
   ALLVERTICAL AND HORIZONTAL TIE BARS SHALL HAVE 12" MAXIMUM SPACING. NO DEDUCTION FOR PIPE OPENING.
3. QUANTIES ARE FOR DESIGN PURPOSES ONLY.
4. MINIMUM DIMENSION "Hcw" IS 6¼" WHERE NOT ADJACENT TO RSP AND 1'-0" PLUS RSP DEPTH WHERE ADJACENT TO RSP.
   MAXIMUM DIMENSION "Hcw" = 4'-0"
5. IF DIMENSION "FH" >= 4.00', CABLE RAILING SHALL BE INSTALLED ON TOP OF HEADWALL.
   SEE STANDARD PLAN B11-47 FOR CABLE RAILING DETAILS.
6. SEE DRAINAGE DETAIL SHEETS FOR RSP PLACEMENT ADJACENT TO HEADWALLS.

SINGLE PIPE CULVERT HEADWALL (Mod-CT1)

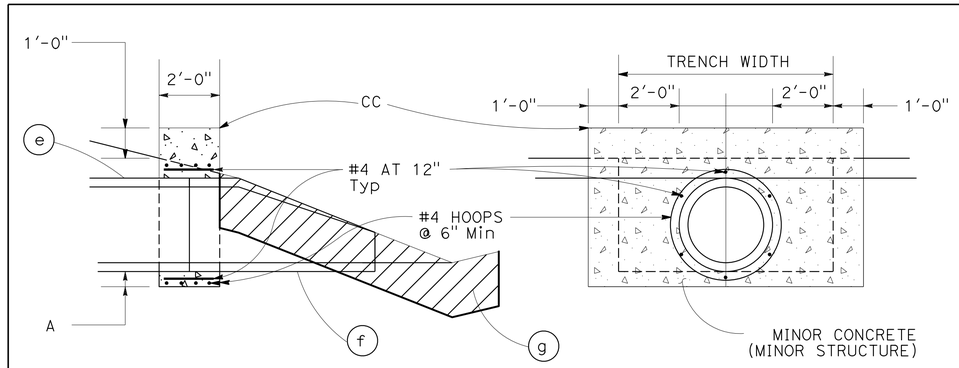

NOTES:

1. MINIMUM COVER FOR REINFORCEMENT SHALL BE 2".
2. PIPE EXTENSION SHALL BE POSITIONED TO PROVIDE FOR A SMOOTH TRANSITION AT THE PIPE FLOW LINE.
3. INTERIOR FORM SHALL BE PLACED TO PREVENT CONCRETE INTRUSION INTO PIPE INTERIOR.
4. USE AT ALL LOCATIONS INDICATED ON DRAINAGE PLANS.
5. WHERE CC IS USED TO CONNECT A FES SURROUNDED BY RSP, BOTTOM OF CC SHALL EXTEND 1.00' BELOW RSP AND SIDES OF CC SHALL EXTEND 1.00' INTO TRENCH WALL.

DRAINAGE ABBREVIATIONS

CC = CONCRETE COLLAR

LEGEND

RSP (FACING, METHOD B)

MINOR CONCRETE (MINOR STRUCTURE)

CONCRETE COLLAR

1 f

DRAINAGE DETAILS

NO SCALE

DD-2

STATE OF CALIFORNIA - DEPARTMENT OF TRANSPORTATION
Caltrans
DIVISION OF ENGINEERING HYDRAULICS

FUNCTIONAL SUPERVISOR: DENNIS JAGODA
CALCULATED-DESIGNED BY: CLARK W. TOWNSEND
CHECKED BY: GURDEEP S. BHATTAL
REVISED BY
DATE REVISED

LAST REVISION 01-11-16
DATE PLOTTED => 12-JAN-2016
TIME PLOTTED => 16:25

Dist	COUNTY	ROUTE	POST MILES TOTAL PROJECT	SHEET No.	TOTAL SHEETS
03	Yol	16	23.2/23.5	17	52

Clark W. Townsend 1-11-16
REGISTERED CIVIL ENGINEER DATE

1-11-16
PLANS APPROVAL DATE

REGISTERED PROFESSIONAL ENGINEER CLARK W. TOWNSEND No. 47921 Exp. 12-31-17 CIVIL STATE OF CALIFORNIA

THE STATE OF CALIFORNIA OR ITS OFFICERS OR AGENTS SHALL NOT BE RESPONSIBLE FOR THE ACCURACY OR COMPLETENESS OF SCANNED COPIES OF THIS PLAN SHEET.

ABBREVISTIONS
CC = CONCRETE COLLAR
Drsp = DEPTH OF RSP

LEGEND

RSP (FACING, METHOD B)

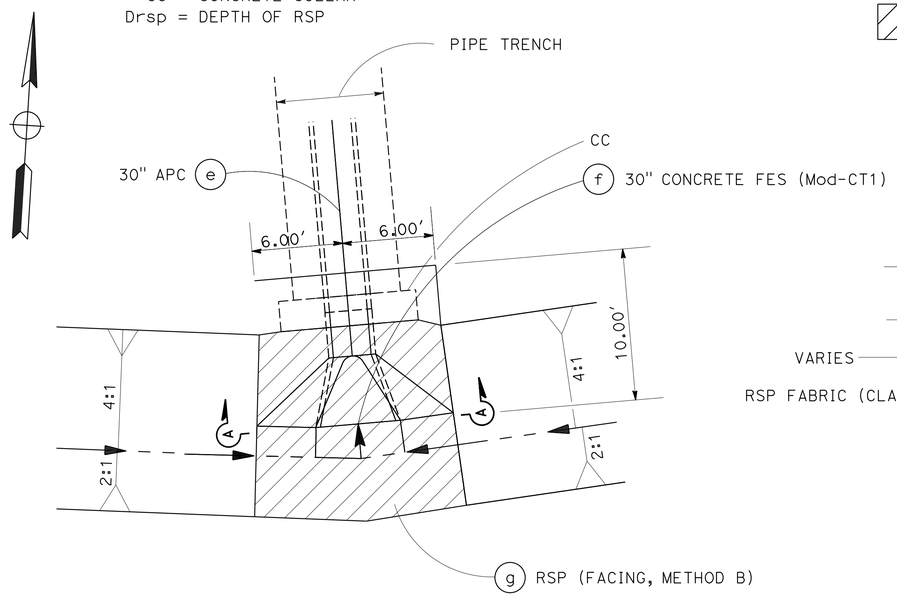

PLAN

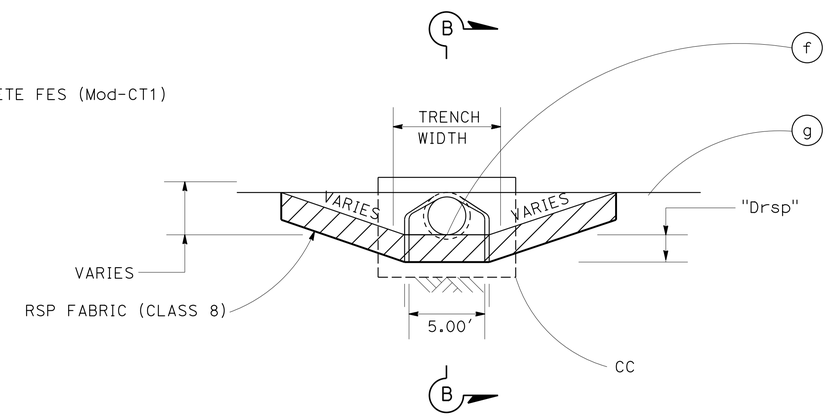

SECTION A-A

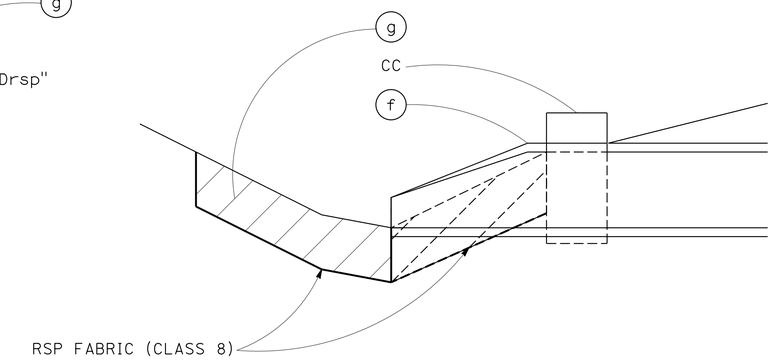

SECTION B-B

NOTES:

1. DIMENSION "Drsp" = 1.80'.

PROPOSED INLET GRADING AND RSP

1 (f)

ABBREVISTIONS
CC = CONCRETE COLLAR
Drsp = DEPTH OF RSP

LEGEND

RSP (FACING, METHOD B)

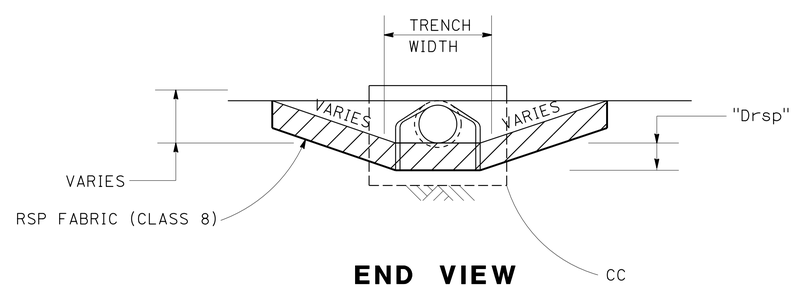

END VIEW

NOTES:

1. FOR DETAILS NOT SHOWN, SEE Std Plan D94B.
2. WHEN CONCRETE FES IS SURROUNDED BY RSP, CUTOFF WALL (SKIRT) SHOULD NOT BE CONSTRUCTED.

CONCRETE FLARED END SECTION (Mod-CT1)

1 (e)

DRAINAGE DETAILS

NO SCALE

DD-3

STATE OF CALIFORNIA - DEPARTMENT OF TRANSPORTATION
Caltrans
DIVISION OF ENGINEERING HYDRAULICS

FUNCTIONAL SUPERVISOR: DENNIS JAGODA
CALCULATED-DESIGNED BY: GURDEEP S. BHATTAL
CHECKED BY: CLARK W. TOWNSEND
REVISED BY
DATE REVISED

LAST REVISION 01-11-16
DATE PLOTTED => 12-JAN-2016
TIME PLOTTED => 16:25

Dist	COUNTY	ROUTE	POST MILES TOTAL PROJECT	SHEET No.	TOTAL SHEETS
03	Yol	16	23.2/23.5	18	52

Clark W. Townsend 1-11-16
REGISTERED CIVIL ENGINEER DATE

1-11-16
PLANS APPROVAL DATE

REGISTERED PROFESSIONAL ENGINEER
CLARK W. TOWNSEND
No. 47921
Exp. 12-31-17
CIVIL
STATE OF CALIFORNIA

THE STATE OF CALIFORNIA OR ITS OFFICERS OR AGENTS SHALL NOT BE RESPONSIBLE FOR THE ACCURACY OR COMPLETENESS OF SCANNED COPIES OF THIS PLAN SHEET.

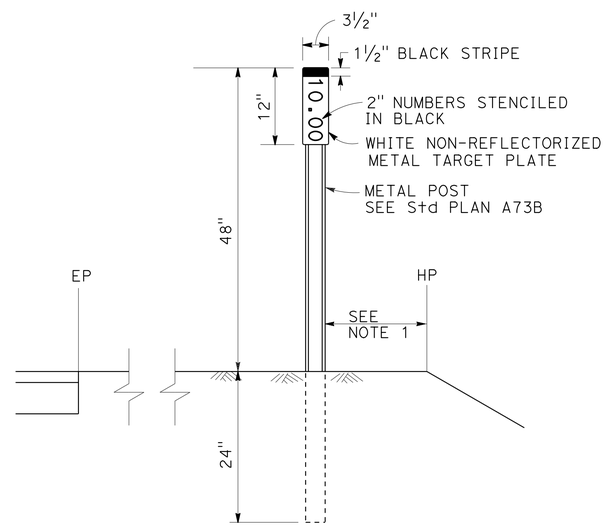

NOTE: 1. PLACE CULVERT MARKERS 1' FROM EDGE OF HP OR AS DIRECTED BY THE ENGINEER.

MARKER (CULVERT)

ALIGNMENT	STATION	LOCATION Lt/Rt	QUANTITY EA	STENCIL PM *	DS	DU	DESCRIPTION	SHEET
"B"	207+96.20	Lt/Rt	2	23.36	1	e	30" APC	D-1
TOTAL			2					

* PM BASED ON EXISTING MARKER (CULVERT) PM 23.36 AT Sta "B" 207+96.20.

MARKER (CULVERT)

DRAINAGE DETAILS

NO SCALE

DD-4

STATE OF CALIFORNIA - DEPARTMENT OF TRANSPORTATION
Caltrans
DIVISION OF ENGINEERING HYDRAULICS

FUNCTIONAL SUPERVISOR: DENNIS JAGODA
CALCULATED-DESIGNED BY: CLARK W. TOWNSEND
CHECKED BY: GURDEEP S. BHATTAL
REVISED BY
DATE REVISED

LAST REVISION 01-11-16
DATE PLOTTED => 12-JAN-2016
TIME PLOTTED => 16:25

Dist	COUNTY	ROUTE	POST MILES TOTAL PROJECT	SHEET No.	TOTAL SHEETS
03	Yol	16	23.2/23.5	19	52

Clark W Townsend 1-11-16
REGISTERED CIVIL ENGINEER DATE

1-11-16
PLANS APPROVAL DATE

REGISTERED PROFESSIONAL ENGINEER CLARK W. TOWNSEND No. 47921 Exp.12-31-17 CIVIL STATE OF CALIFORNIA

THE STATE OF CALIFORNIA OR ITS OFFICERS OR AGENTS SHALL NOT BE RESPONSIBLE FOR THE ACCURACY OR COMPLETENESS OF SCANNED COPIES OF THIS PLAN SHEET.

ABBREVIATIONS

SPCHW = SINGLE PIPE CULVERT HEADWALL
CC = CONCRETE COLLAR

ALTERNATIVE PIPE CULVERT

DESIGNATION	RCP	HDPE (TYPE S)
30"	X	X

DRAINAGE QUANTITIES

DRAINAGE SHEET No.	DRAINAGE SYSTEM No.	DRAINAGE UNIT	REMOVE CULVERT	ROCK SLOPE PROTECTION (FACING, METHOD B)	(N) ROCK SLOPE PROTECTION FABRIC (CLASS 8)	MINOR CONCRETE (MINOR STRUCTURE)	CABLE RAILING	30" CONCRETE FLARED END SECTION	MARKER (CULVERT)	APC 30"	(N) MAX DEPTH OF COVER *	(N) JOINT CLASSIFICATION **	DESCRIPTION	STATION	DRAINAGE SHEET No.	DRAINAGE SYSTEM No.	DRAINAGE UNIT
			LF	CY	SQYD	CY	LF	EA	EA	LF	FT	*					
D-1	1	a	43.8										REMOVE CULVERT	"B" 207+96.20	D-1	1	a
		b		49.13	94.8								RSP (FACING, METHOD B)				b
		c				8.48							SPCHW (Mod-CT1)				c
		d					27						CABLE RAILING				d
		e							2	77.2	4.2	S	30" APC	"B" 207+96.20			e
		f				2.01		1					30" CONCRETE FES (Mod-CT1)				f
		g		13.80	34.6								RSP (FACING, METHOD B)				g
SHEET TOTAL			43.8	62.93	129.4	10.49	27	1	2	77.2							
TOTAL			43.8	62.93	129.4	10.49	27	1	2	77.2							

(N) - NOT A SEPARATE PAY ITEM, FOR INFORMATION ONLY.
* STANDARD (S)

DRAINAGE QUANTITIES
DQ-1

STATE OF CALIFORNIA - DEPARTMENT OF TRANSPORTATION
Caltrans
DIVISION OF ENGINEERING HYDRAULICS

FUNCTIONAL SUPERVISOR: DENNIS JAGODA
CALCULATED-DESIGNED BY: CLARK W. TOWNSEND
CHECKED BY: GURDEEP S. BHATTAL
REVISED BY
DATE REVISED

LAST REVISION 01-11-16 | DATE PLOTTED => 12-JAN-2016 | TIME PLOTTED => 16:25

Dist	COUNTY	ROUTE	POST MILES TOTAL PROJECT	SHEET No.	TOTAL SHEETS
03	Yol	16	23.2/23.5	20	52

REGISTERED CIVIL ENGINEER 1-11-16 DATE

1-11-16
PLANS APPROVAL DATE

REGISTERED PROFESSIONAL ENGINEER JALWAT P. AHMAD No. C 80547 Exp. 03-31-17 CIVIL STATE OF CALIFORNIA

THE STATE OF CALIFORNIA OR ITS OFFICERS OR AGENTS SHALL NOT BE RESPONSIBLE FOR THE ACCURACY OR COMPLETENESS OF SCANNED COPIES OF THIS PLAN SHEET.

NOTES:

1. FOR ACCURATE RIGHT OF WAY DATA, CONTACT RIGHT OF WAY ENGINEERING AT THE DISTRICT OFFICE.
2. NOT ALL UTILITIES OUTSIDE OF STATE RIGHT OF WAY ARE SHOWN.

UTILITY OWNERS

—— -e —— —— PACIFIC GAS AND ELECTRIC (PG&E)

—— --t —— —— FRONTIER
AMERICAN TELEPHONE AND TELEGRAPH (AT&T)

ABBREVIATIONS

PTE PERMIT TO ENTER

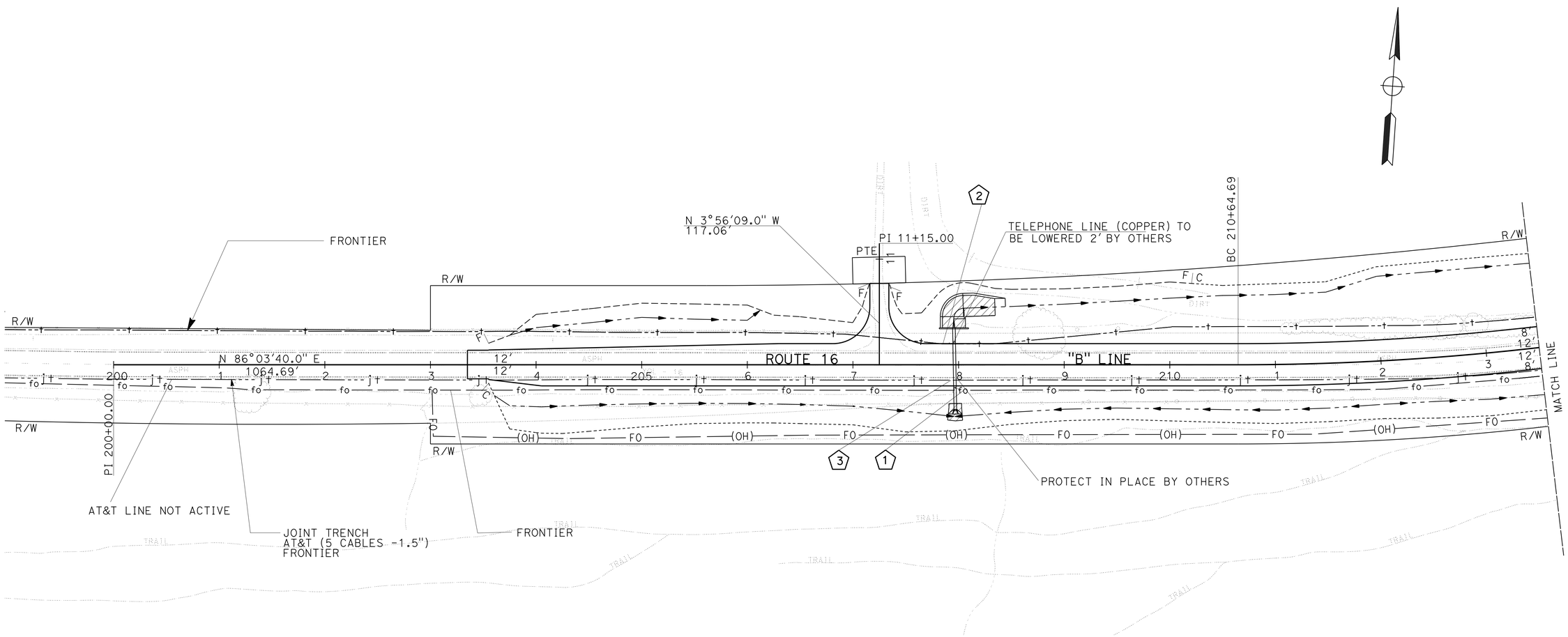

POSITIVE LOCATION INFORMATION

No. ⬠	LOCATION	ELEVATION	UTILITY	METHOD
1	24.2' R+ "B" 208+05.5	238.89	TELEPHONE	POTHOLING
2	19.7 L+ "B" 207+85.2	238.7	TELEPHONE	POTHOLING
3	14.6' R+ "B" 207+92.8	238.19	TELEPHONE	POTHOLING

APPROVED FOR UTILITY INFORMATION ONLY

UTILITY PLAN

SCALE: 1"=50'

U-1

STATE OF CALIFORNIA - DEPARTMENT OF TRANSPORTATION
Caltrans DESIGN

FUNCTIONAL SUPERVISOR: JALWAT P. AHMAD
CALCULATED-DESIGNED BY: JALWAT P. AHMAD
CHECKED BY: SUMANDEEP SUDINI
REVISED BY
DATE REVISED

LAST REVISION 12-2-15
DATE PLOTTED => 12-JAN-2016
TIME PLOTTED => 16:25

NOTES:

Dist	COUNTY	ROUTE	POST MILES TOTAL PROJECT	SHEET No.	TOTAL SHEETS
03	Yol	16	23.2/23.5	21	52

REGISTERED CIVIL ENGINEER 1-11-16 DATE

1-11-16
PLANS APPROVAL DATE

REGISTERED PROFESSIONAL ENGINEER
JALWAT P. AHMAD
No. C 80547
Exp. 03-31-17
CIVIL
STATE OF CALIFORNIA

THE STATE OF CALIFORNIA OR ITS OFFICERS OR AGENTS SHALL NOT BE RESPONSIBLE FOR THE ACCURACY OR COMPLETENESS OF SCANNED COPIES OF THIS PLAN SHEET.

NOTES:

1. FOR ACCURATE RIGHT OF WAY DATA, CONTACT RIGHT OF WAY ENGINEERING AT THE DISTRICT OFFICE.
2. NOT ALL UTILITIES OUTSIDE OF STATE RIGHT OF WAY ARE SHOWN.

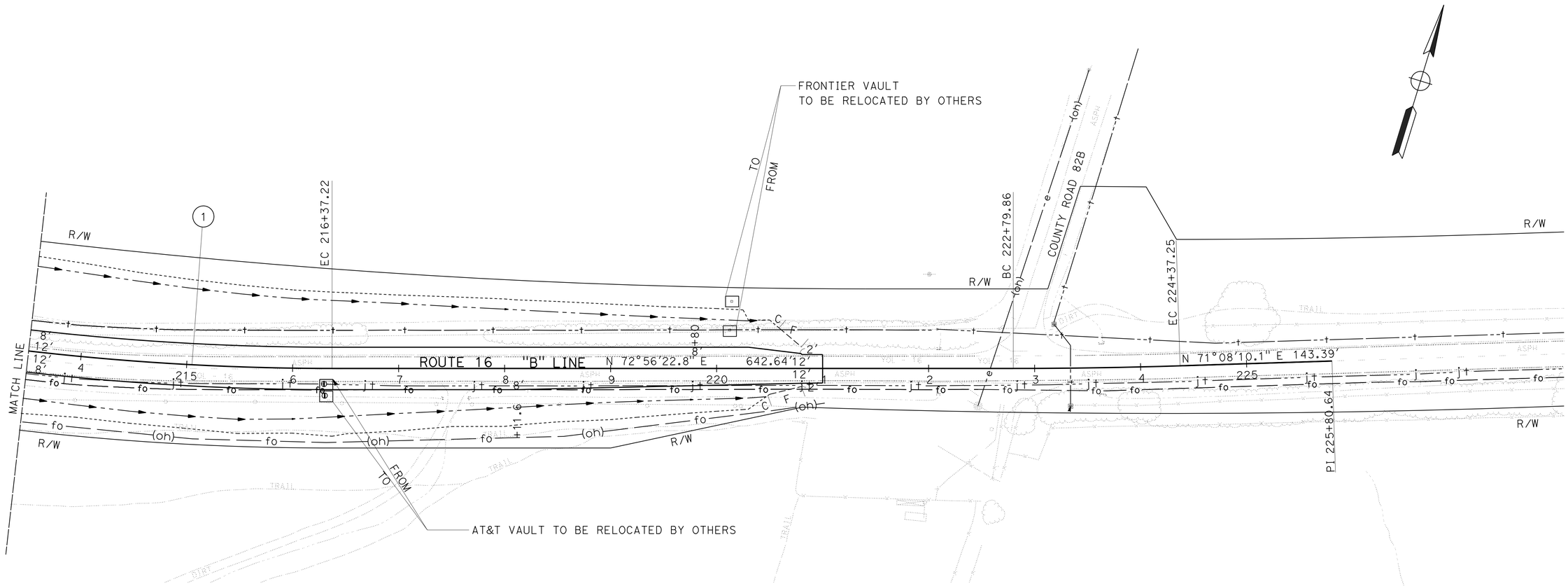

UTILITY PLAN

SCALE: 1"=50'

U-2

APPROVED FOR UTILITY INFORMATION ONLY

REVISED BY	
DATE REVISED	
JALWAT P. AHMAD	
SUMANDEEP SUDINI	
CALCULATED-DESIGNED BY	
CHECKED BY	
FUNCTIONAL SUPERVISOR	JALWAT P. AHMAD

STATE OF CALIFORNIA - DEPARTMENT OF TRANSPORTATION
Caltrans
DESIGN

LAST REVISION 12-2-15
DATE PLOTTED => 12-JAN-2016
TIME PLOTTED => 16:25

Dist	COUNTY	ROUTE	POST MILES TOTAL PROJECT	SHEET No.	TOTAL SHEETS
03	Yol	16	23.2/23.5	22	52

REGISTERED CIVIL ENGINEER 1-11-16 DATE

1-11-16
PLANS APPROVAL DATE

REGISTERED PROFESSIONAL ENGINEER STEVEN P. HERYFORD No. C73705 Exp. 06-30-17 CIVIL STATE OF CALIFORNIA

THE STATE OF CALIFORNIA OR ITS OFFICERS OR AGENTS SHALL NOT BE RESPONSIBLE FOR THE ACCURACY OR COMPLETENESS OF SCANNED COPIES OF THIS PLAN SHEET.

NOTES:

1. EXACT SIGN LOCATIONS TO BE DETERMINED BY THE ENGINEER.
2. ALL SIGN CODES SHOWN ARE FEDERAL SIGN CODES UNLESS OTHERWISE DESIGNATED AS A CALIFORNIA SIGN CODE.
3. <CA> = CALIFORNIA SIGN CODE.

STATIONARY MOUNTED CONSTRUCTION AREA SIGNS

SIGN LETTER	SIGN CODE	PANEL SIZE	SIGN MESSAGE	NUMBER OF POST AND SIZE	NUMBER OF SIGNS
A	W20-1	48" x 48"	ROAD WORK AHEAD	1 - 6" x 6"	2
B	C40(Mod)<CA>	48" x 36"	TRAFFIC FINES DOUBLED IN WORK ZONES	1 - 4" x 6"	2
C	W20-1	36" x 36"	ROAD WORK AHEAD	1 - 4" x 6"	1
D	G20-2	36" x 18"	END ROAD WORK	1 - 4" x 4"	2

SIGN DETAILS

C40(Mod)<CA>

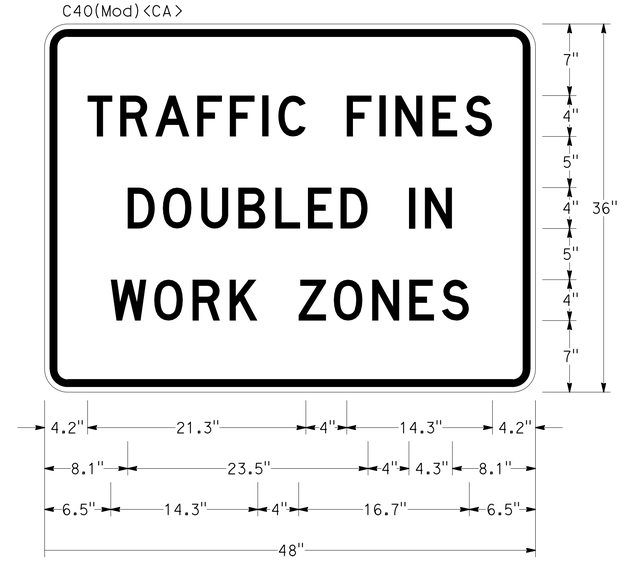

3/4" BORDER WITH 2 1/4" RADIUS and 1/2" INDENT

RETROREFLECTIVE WHITE BACKGROUND
WITH BLACK LEGEND AND BORDER

"TRAFFIC FINES" D
"DOUBLED IN" D
"WORK ZONES" D

LEGEND

(X) CONSTRUCTION AREA SIGN LETTER

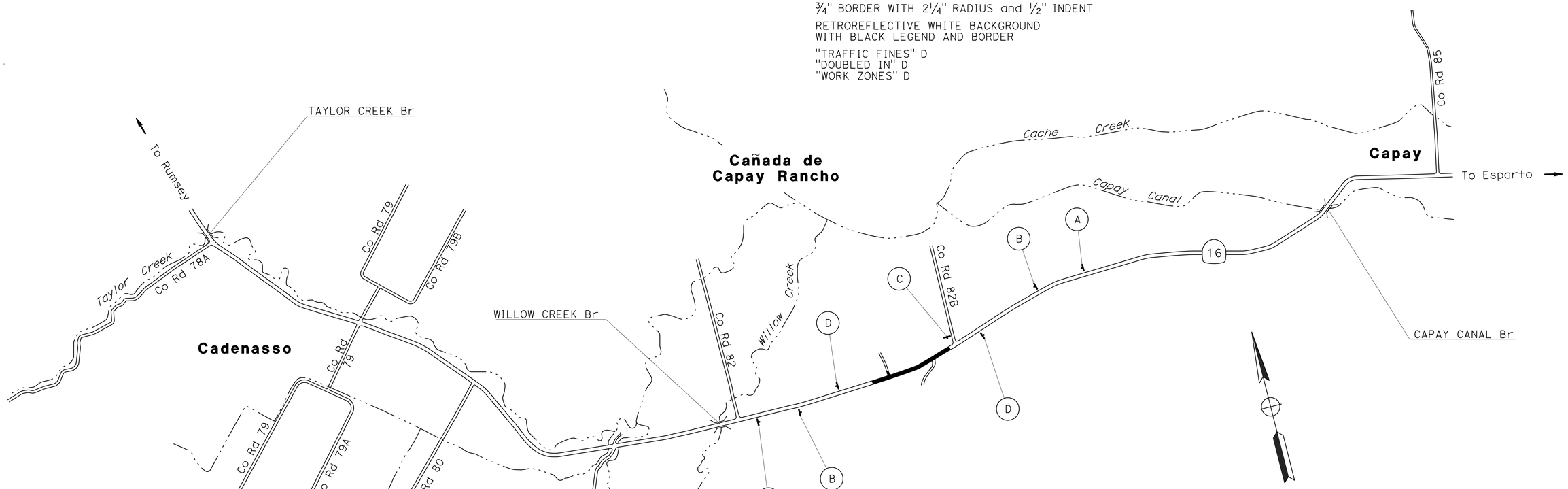

CONSTRUCTION AREA SIGNS

NO SCALE

CS-1

APPROVED FOR CONSTRUCTION AREA SIGN WORK ONLY

STATE OF CALIFORNIA - DEPARTMENT OF TRANSPORTATION
Caltrans® DIVISION OF ENGINEERING

FUNCTIONAL SUPERVISOR: FERMIN BARRIGA
CALCULATED-DESIGNED BY: JOSE LUIS VALDEZ
CHECKED BY: CHUCK COOK
REVISED BY
DATE REVISED

LAST REVISION 09-22-15
DATE PLOTTED => 12-JAN-2016
TIME PLOTTED => 16:25

Dist	COUNTY	ROUTE	POST MILES TOTAL PROJECT	SHEET No.	TOTAL SHEETS
03	Yol	16	23.2/23.5	23	52

REGISTERED CIVIL ENGINEER 1-11-16 DATE

1-11-16
PLANS APPROVAL DATE

STEVEN P. HERYFORD No. C73705 Exp. 06-30-17 CIVIL — REGISTERED PROFESSIONAL ENGINEER — STATE OF CALIFORNIA

THE STATE OF CALIFORNIA OR ITS OFFICERS OR AGENTS SHALL NOT BE RESPONSIBLE FOR THE ACCURACY OR COMPLETENESS OF SCANNED COPIES OF THIS PLAN SHEET.

NOTES:

1. DRIVEWAY CONSTRUCTION: CONTRACTOR SHALL PROVIDE TEMPORARY PUBLIC ACCESS THROUGH THE WORK AT ALL TIMES. FOR MORE INFORMATION SEE LAYOUT SHEET L-1 AND PROFILE AND SUPERELEVATION DIAGRAM SHEET PS-1.
2. UNDER ONE-WAY TRAFFIC CONTROL USING REVISED STANDARD PLAN RSP T13, INSTALL TRAFFIC PLASTIC DRUMS AS SHOWN.
3. ALL TRAFFIC PLASTIC DRUMS SHALL BE INSTALLED ON 50' CENTERS UNLESS OTHERWISE SHOWN.
4. PERFORM ROADWAY EXCAVATION AND EMBANKMENT AS SHOWN.
5. UNDER ONE-WAY TRAFFIC CONTROL USING REVISED STANDARD PLAN RSP T13, COMPLETE DRAINAGE SYSTEM No. 1. FOR MORE INFORMATION SEE DRAINAGE PLANS.

ABBREVIATIONS

DES	DESIGN EDGE OF SHOULDER
DHP	DESIGN HINGE POINT
DETW	DESIGN EDGE OF TRAVELED WAY
HMA-A	HOT MIX ASPHALT (TYPE A)
RHMA-G	RUBBERIZED HOT MIX ASPHALT (GAP GRADED)
S/C	SAWCUT LINE
SE	SAFETY EDGE

LEGEND

- TRAFFIC PLASTIC DRUM
- Exist TRAFFIC PLASTIC DRUM (PREVIOUS STAGE)
- DIRECTION OF TRAFFIC
- CONSTRUCTION THIS STAGE
- CONSTRUCTION PREVIOUS STAGE

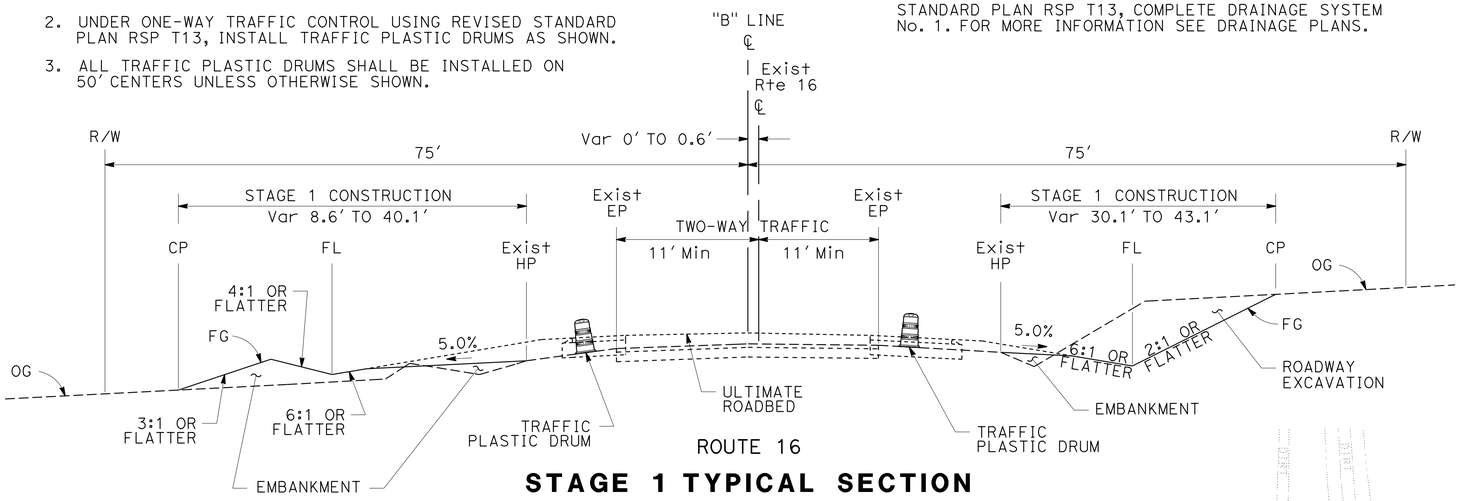

STAGE 1 TYPICAL SECTION

NO SCALE

Sta "B" 203+55 TO "B" 206+00 Lt
Sta "B" 203+55 TO "B" 210+00 Rt

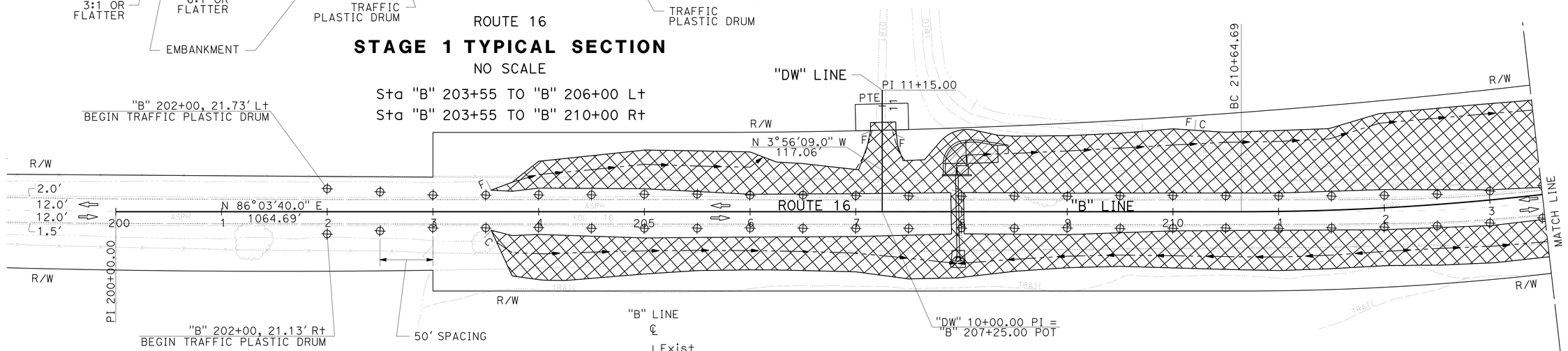

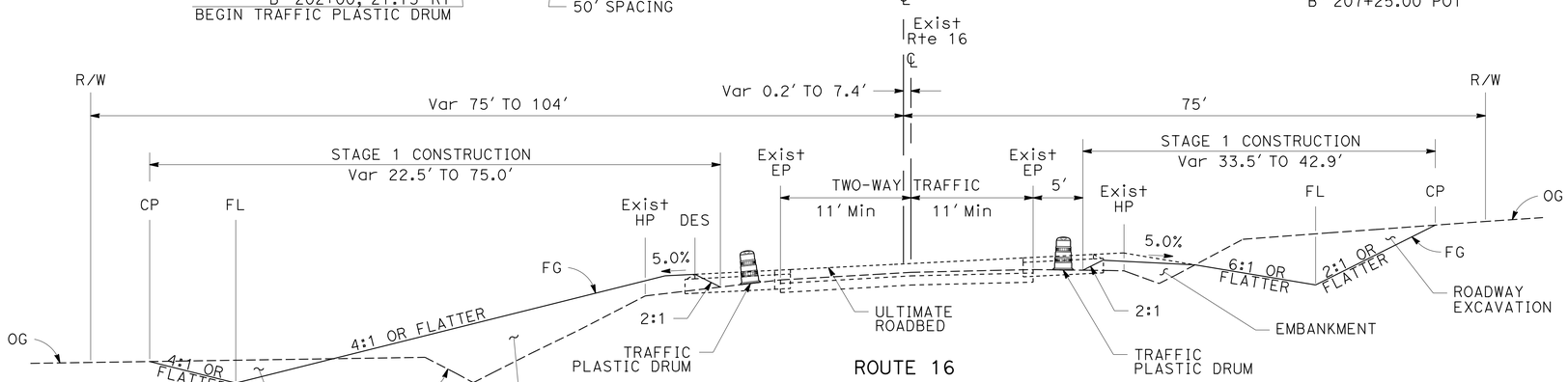

STAGE 1 TYPICAL SECTION

NO SCALE

Sta "B" 206+00 TO "B" 213+00 Lt
Sta "B" 210+00 TO "B" 216+00 Rt

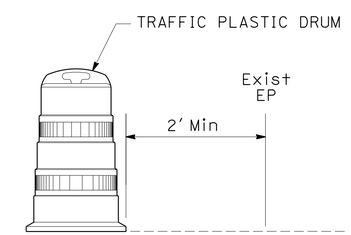

NOTE: EXACT LOCATION TO BE DETERMINED BY THE ENGINEER.

STAGE 1 TRAFFIC PLASTIC DRUM DETAIL

NO SCALE

APPROVED FOR STAGE CONSTRUCTION AND TRAFFIC HANDLING WORK ONLY

STAGE CONSTRUCTION AND TRAFFIC HANDLING PLAN (STAGE 1)

SCALE: 1" = 50'

SC-1

STATE OF CALIFORNIA - DEPARTMENT OF TRANSPORTATION
DIVISION OF ENGINEERING

FUNCTIONAL SUPERVISOR: FERMIN BARRIGA
CALCULATED-DESIGNED BY: JOSE LUIS VALDEZ
CHECKED BY: FERMIN BARRIGA
REVISED BY
DATE REVISED

LAST REVISION 09-23-15
DATE PLOTTED => 12-JAN-2016
TIME PLOTTED => 16:25

Dist	COUNTY	ROUTE	POST MILES TOTAL PROJECT	SHEET No.	TOTAL SHEETS
03	Yol	16	23.2/23.5	24	52

REGISTERED CIVIL ENGINEER 1-11-16 DATE

1-11-16
PLANS APPROVAL DATE

STEVEN P. HERYFORD No. C73705 Exp. 06-30-17 CIVIL — REGISTERED PROFESSIONAL ENGINEER — STATE OF CALIFORNIA

THE STATE OF CALIFORNIA OR ITS OFFICERS OR AGENTS SHALL NOT BE RESPONSIBLE FOR THE ACCURACY OR COMPLETENESS OF SCANNED COPIES OF THIS PLAN SHEET.

NOTES:

1. FOR ADDITIONAL STAGE CONSTRUCTION AND TRAFFIC HANDLING NOTES, SEE STAGE CONSTRUCTION AND TRAFFIC HANDLING PLAN SHEET SC-1.

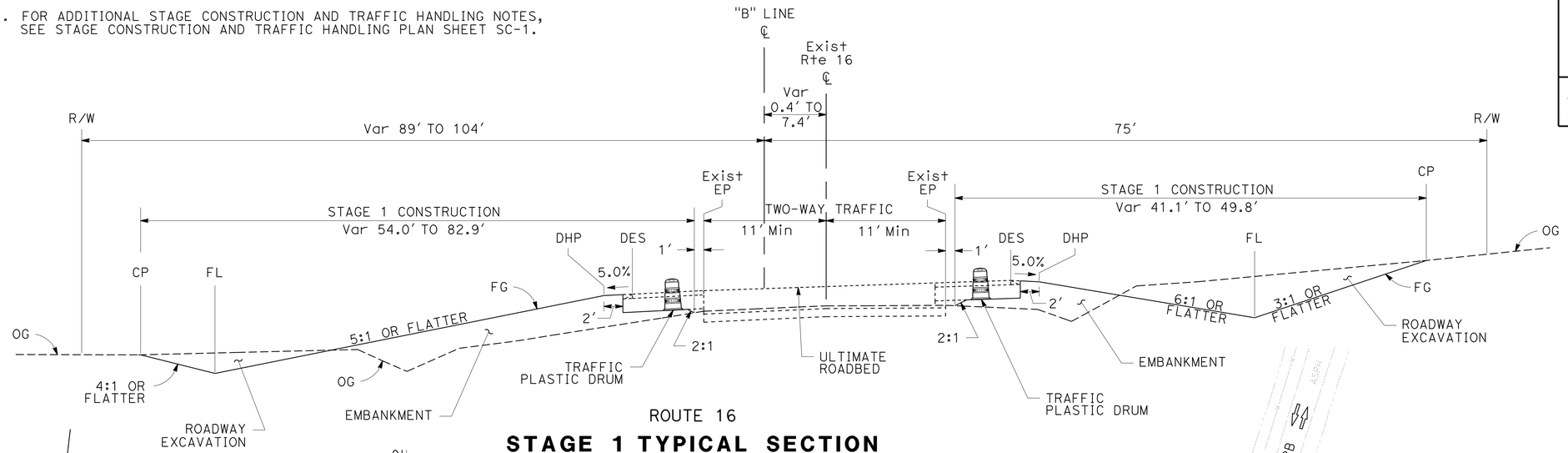

ROUTE 16

STAGE 1 TYPICAL SECTION

NO SCALE

Sta "B" 213+00 TO "B" 217+00 Lt
Sta "B" 216+00 TO "B" 217+00 Rt

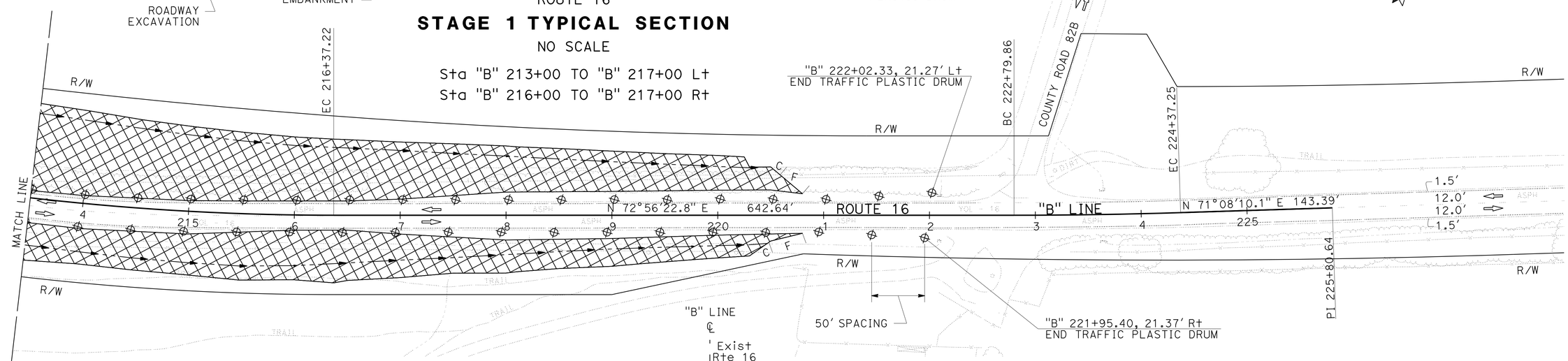

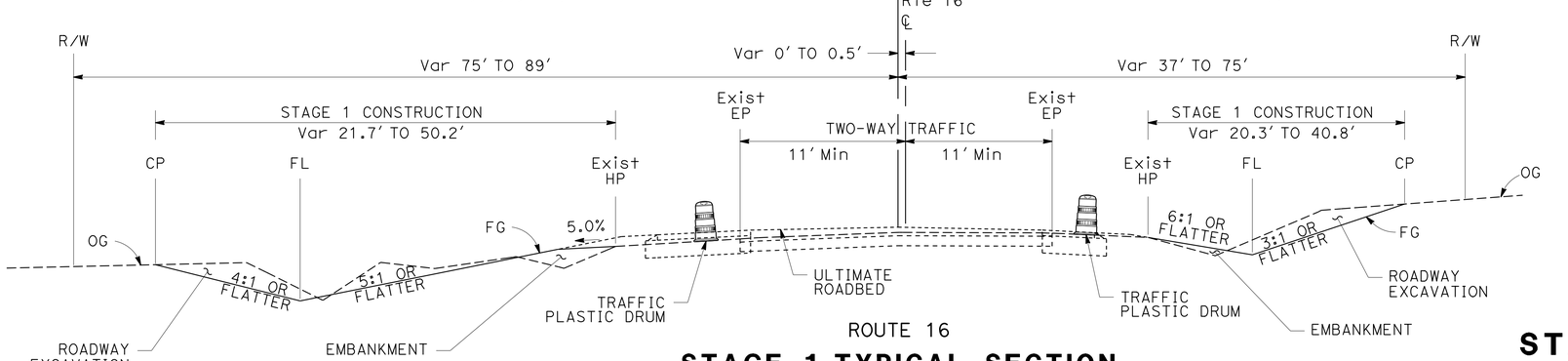

ROUTE 16

STAGE 1 TYPICAL SECTION

NO SCALE

Sta "B" 217+00 TO "B" 220+80

APPROVED FOR STAGE CONSTRUCTION AND TRAFFIC HANDLING WORK ONLY

STAGE CONSTRUCTION AND TRAFFIC HANDLING PLAN (STAGE 1)

SCALE: 1" = 50'

SC-2

STATE OF CALIFORNIA - DEPARTMENT OF TRANSPORTATION
Caltrans® DIVISION OF ENGINEERING

FUNCTIONAL SUPERVISOR: FERMIN BARRIGA
CALCULATED-DESIGNED BY: JOSE LUIS VALDEZ
CHECKED BY: FERMIN BARRIGA
REVISED BY
DATE REVISED

LAST REVISION 09-23-15 | DATE PLOTTED => 12-JAN-2016 | TIME PLOTTED => 16:25

Dist	COUNTY	ROUTE	POST MILES TOTAL PROJECT	SHEET No.	TOTAL SHEETS
03	Yol	16	23.2/23.5	25	52

REGISTERED CIVIL ENGINEER 1-11-16 DATE

1-11-16
PLANS APPROVAL DATE

REGISTERED PROFESSIONAL ENGINEER STEVEN P. HERYFORD No. C73705 Exp. 06-30-17 CIVIL STATE OF CALIFORNIA

THE STATE OF CALIFORNIA OR ITS OFFICERS OR AGENTS SHALL NOT BE RESPONSIBLE FOR THE ACCURACY OR COMPLETENESS OF SCANNED COPIES OF THIS PLAN SHEET.

NOTES:

1. DRIVEWAY CONSTRUCTION: CONTRACTOR SHALL PROVIDE TEMPORARY PUBLIC ACCESS THROUGH THE WORK AT ALL TIMES.
2. UNDER ONE-WAY TRAFFIC CONTROL USING REVISED STANDARD PLAN RSP T13, CONSTRUCT PORTION OF SHOULDER WIDENING AS SHOWN, PERFORM ROADWAY EXCAVATION, EMBANKMENT, PLACE CLASS 2 AB AND TRAFFIC PLASTIC DRUMS.
3. ALL TRAFFIC PLASTIC DRUMS SHALL BE INSTALLED ON 50' CENTERS UNLESS OTHERWISE SHOWN.
4. FOR ADDITIONAL STAGE CONSTRUCTION AND TRAFFIC HANDLING NOTES, SEE STAGE CONSTRUCTION AND TRAFFIC HANDLING PLAN SHEET SC-1.

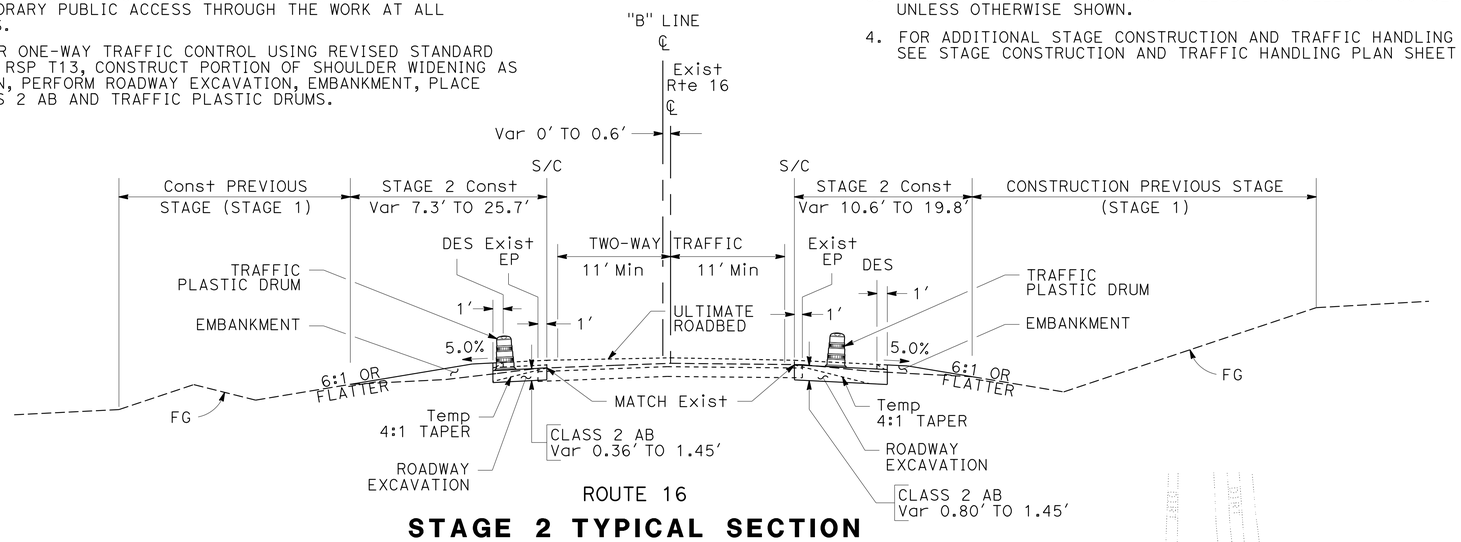

ROUTE 16

STAGE 2 TYPICAL SECTION

NO SCALE

Sta "B" 203+55 TO "B" 206+00 Lt
Sta "B" 203+55 TO "B" 210+00 Rt

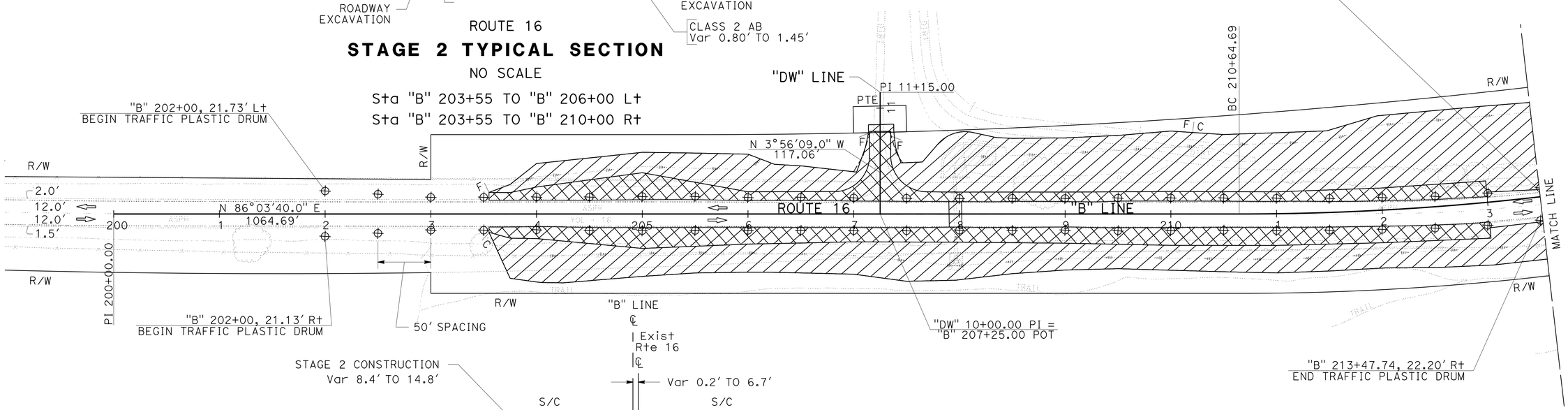

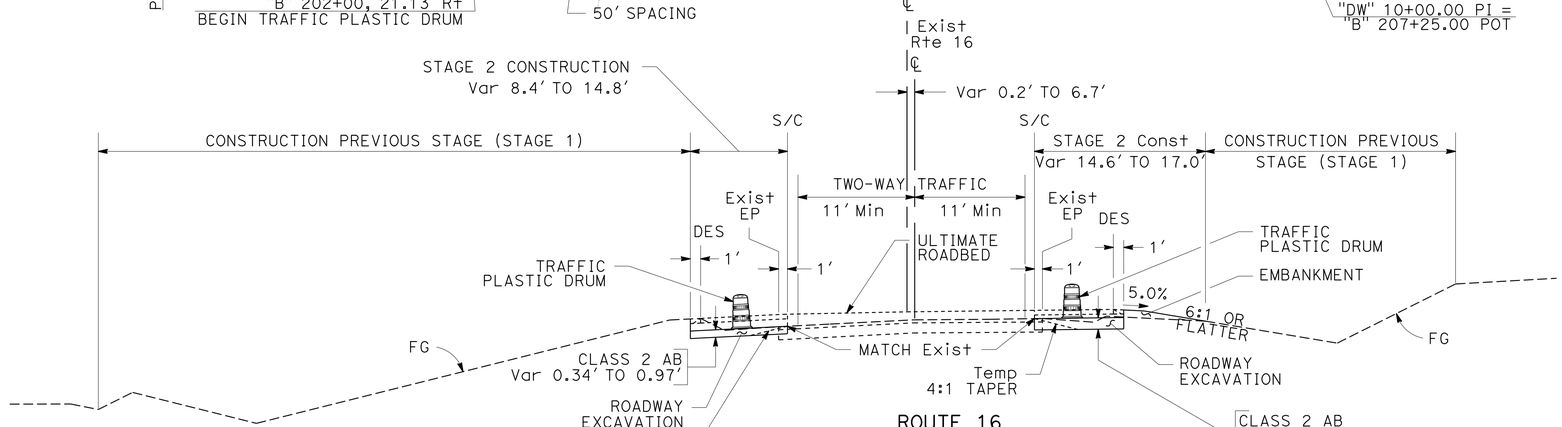

ROUTE 16

STAGE 2 TYPICAL SECTION

NO SCALE

Sta "B" 206+00 TO "B" 213+00 Lt
Sta "B" 210+00 TO "B" 213+00 Rt

APPROVED FOR STAGE CONSTRUCTION AND TRAFFIC HANDLING WORK ONLY

STAGE CONSTRUCTION AND TRAFFIC HANDLING PLAN (STAGE 2)

SCALE: 1" = 50'

SC-3

STATE OF CALIFORNIA - DEPARTMENT OF TRANSPORTATION
Caltrans® DIVISION OF ENGINEERING

FUNCTIONAL SUPERVISOR: FERMIN BARRIGA
CALCULATED-DESIGNED BY: JOSE LUIS VALDEZ
CHECKED BY: FERMIN BARRIGA
REVISED BY
DATE REVISED

LAST REVISION 10-04-15
DATE PLOTTED => 12-JAN-2016
TIME PLOTTED => 16:25

Dist	COUNTY	ROUTE	POST MILES TOTAL PROJECT	SHEET No.	TOTAL SHEETS
03	Yol	16	23.2/23.5	26	52

REGISTERED CIVIL ENGINEER 1-11-16 DATE

1-11-16
PLANS APPROVAL DATE

REGISTERED PROFESSIONAL ENGINEER STEVEN P. HERYFORD No. C73705 Exp. 06-30-17 CIVIL STATE OF CALIFORNIA

THE STATE OF CALIFORNIA OR ITS OFFICERS OR AGENTS SHALL NOT BE RESPONSIBLE FOR THE ACCURACY OR COMPLETENESS OF SCANNED COPIES OF THIS PLAN SHEET.

NOTES:

3. FOR ADDITIONAL STAGE CONSTRUCTION AND TRAFFIC HANDLING NOTES, SEE STAGE CONSTRUCTION AND TRAFFIC HANDLING PLAN SHEETS SC-1 AND SC-3.

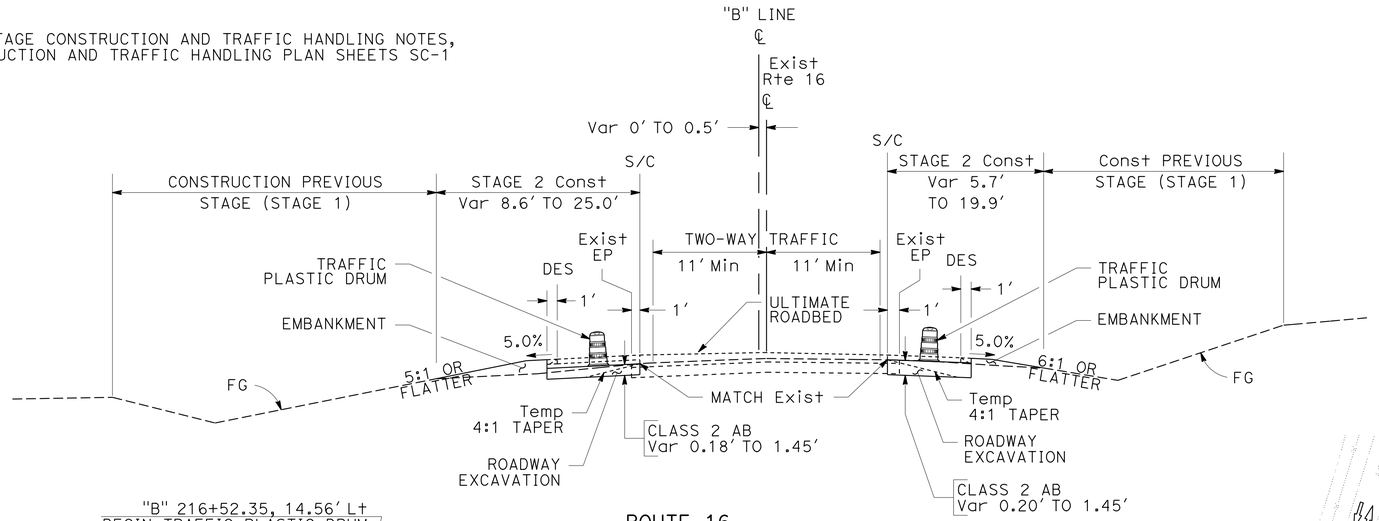

ROUTE 16

STAGE 2 TYPICAL SECTION

NO SCALE

Sta "B" 217+00 TO "B" 220+80

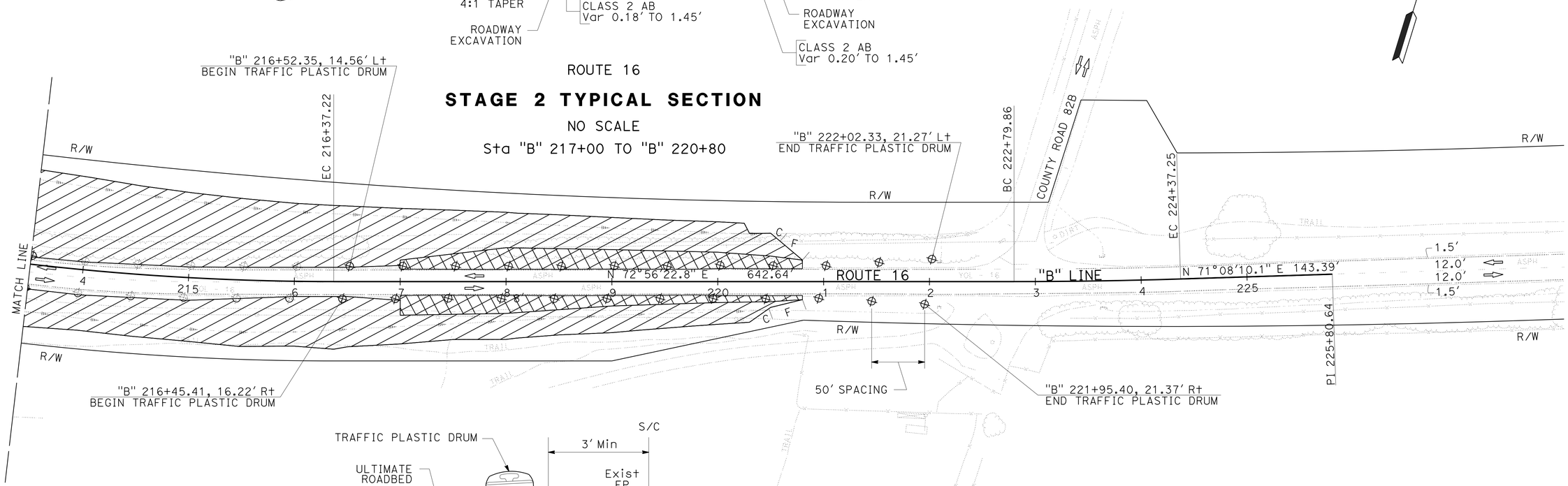

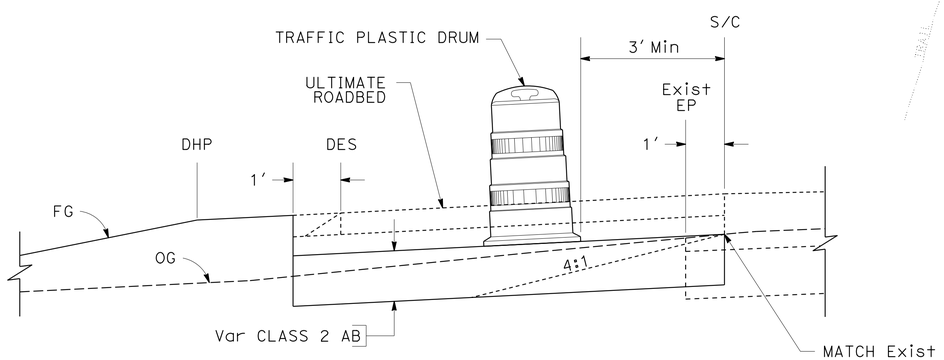

NOTE: EXACT LOCATION TO BE DETERMINED BY THE ENGINEER.

STAGE 2 TRAFFIC PLASTIC DRUM DETAIL

NO SCALE

APPROVED FOR STAGE CONSTRUCTION AND TRAFFIC HANDLING WORK ONLY

STAGE CONSTRUCTION AND TRAFFIC HANDLING PLAN (STAGE 2)

SCALE: 1" = 50'

SC-4

STATE OF CALIFORNIA - DEPARTMENT OF TRANSPORTATION
Caltrans® DIVISION OF ENGINEERING

FUNCTIONAL SUPERVISOR: FERMIN BARRIGA

CALCULATED-DESIGNED BY: JOSE LUIS VALDEZ
CHECKED BY: FERMIN BARRIGA

REVISED BY
DATE REVISED

LAST REVISION 11-04-15
DATE PLOTTED => 12-JAN-2016
TIME PLOTTED => 16:25

Dist	COUNTY	ROUTE	POST MILES TOTAL PROJECT	SHEET No.	TOTAL SHEETS
03	Yol	16	23.2/23.5	27	52

REGISTERED CIVIL ENGINEER 1-11-16 DATE

1-11-16
PLANS APPROVAL DATE

STEVEN P. HERYFORD No. C73705 Exp. 06-30-17 CIVIL — REGISTERED PROFESSIONAL ENGINEER — STATE OF CALIFORNIA

THE STATE OF CALIFORNIA OR ITS OFFICERS OR AGENTS SHALL NOT BE RESPONSIBLE FOR THE ACCURACY OR COMPLETENESS OF SCANNED COPIES OF THIS PLAN SHEET.

NOTES:

1. DRIVEWAY CONSTRUCTION: CONTRACTOR SHALL PROVIDE TEMPORARY PUBLIC ACCESS THROUGH THE WORK AT ALL TIMES.
2. UNDER ONE-WAY TRAFFIC CONTROL USING REVISED STANDARD PLAN RSP T13, COLD PLANE CONFORMS, COMPLETE SHOULDER WIDENING AS SHOWN, COMPLETE VARIABLE HMA-A PAVING EXCEPT TOP LIFTS 0.25' HMA-A AND 0.20' RHMA-G, PLACE EMBANKMENT, CLASS 2 AB AND TRAFFIC PLASTIC DRUMS.
3. ALL TRAFFIC PLASTIC DRUMS SHALL BE INSTALLED ON 50' CENTERS UNLESS OTHERWISE SHOWN.
4. FOR ADDITIONAL STAGE CONSTRUCTION AND TRAFFIC HANDLING NOTES, SEE STAGE CONSTRUCTION AND TRAFFIC HANDLING PLAN SHEET SC-1.
5. FOR ADDITIONAL STAGE 3 COLD PLANE AC PAVEMENT DETAILS AND CONFORM INFORMATION, SEE STAGE CONSTRUCTION DETAILS SHEET SCD-1.

LEGEND

STAGE 3 CONFORM AND COLD PLANE AC PAVEMENT LIMITS

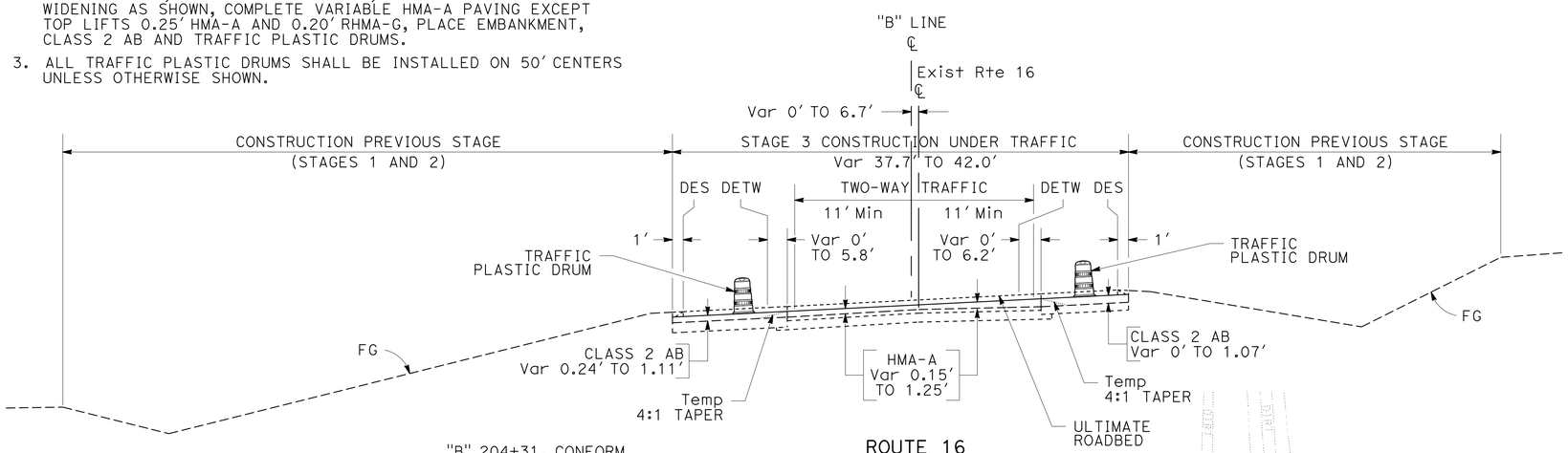

ROUTE 16

STAGE 3 TYPICAL SECTION

NO SCALE

Sta "B" 204+31 TO "B" 213+00

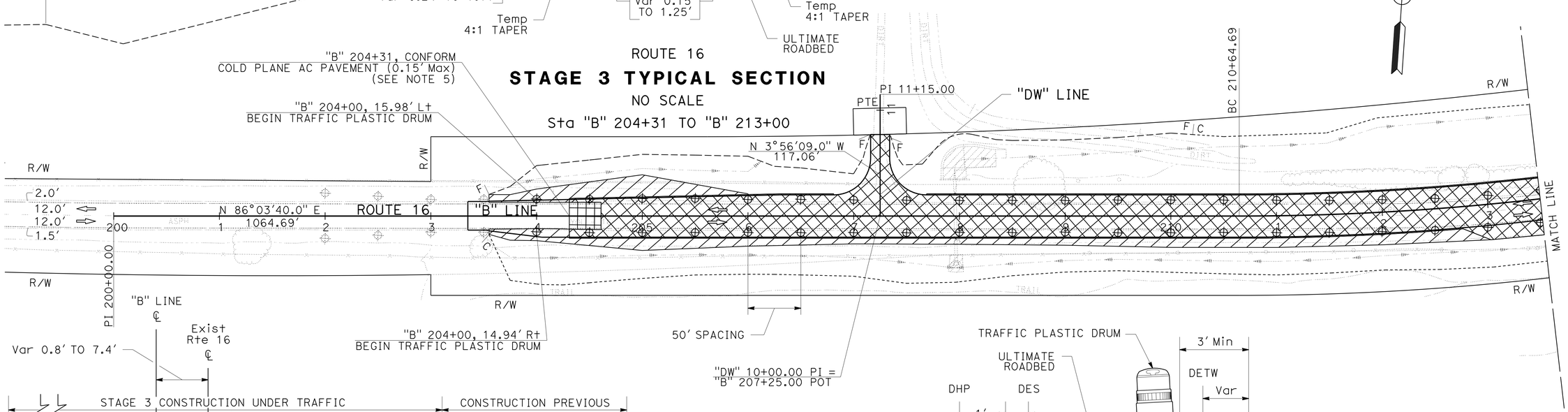

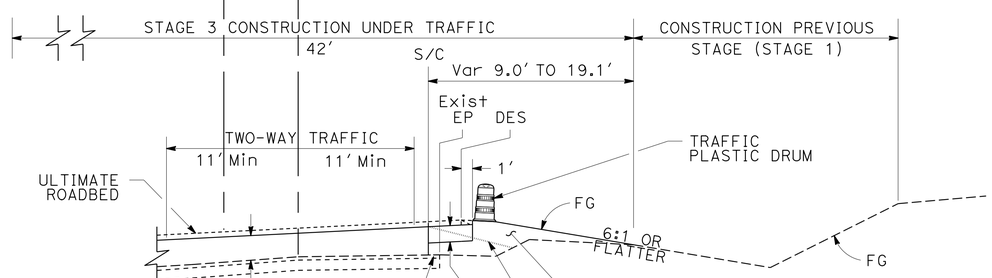

ROUTE 16

STAGE 3 TYPICAL SECTION

NO SCALE

Sta "B" 213+00 TO "B" 216+00 Rt

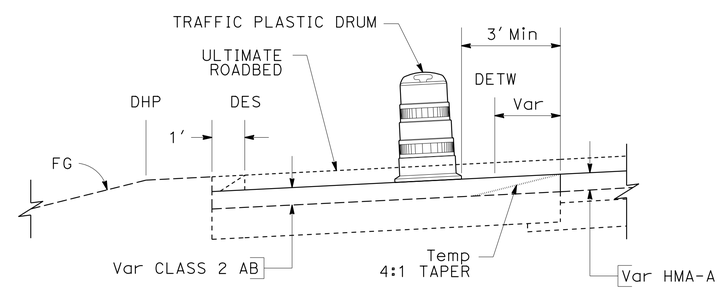

NOTE: EXACT LOCATION TO BE DETERMINED BY THE ENGINEER.

STAGE 3 TRAFFIC PLASTIC DRUM DETAIL

NO SCALE

APPROVED FOR STAGE CONSTRUCTION AND TRAFFIC HANDLING WORK ONLY

STAGE CONSTRUCTION AND TRAFFIC HANDLING PLAN (STAGE 3)

SCALE: 1" = 50'

SC-5

STATE OF CALIFORNIA - DEPARTMENT OF TRANSPORTATION
Caltrans® DIVISION OF ENGINEERING

FUNCTIONAL SUPERVISOR: FERMIN BARRIGA
CALCULATED-DESIGNED BY: JOSE LUIS VALDEZ
CHECKED BY: FERMIN BARRIGA
REVISED BY
DATE REVISED

LAST REVISION 10-04-15
DATE PLOTTED => 12-JAN-2016
TIME PLOTTED => 16:25

Dist	COUNTY	ROUTE	POST MILES TOTAL PROJECT	SHEET No.	TOTAL SHEETS
03	Yol	16	23.2/23.5	28	52

REGISTERED CIVIL ENGINEER 1-11-16 DATE

1-11-16
PLANS APPROVAL DATE

REGISTERED PROFESSIONAL ENGINEER STEVEN P. HERYFORD No. C73705 Exp. 06-30-17 CIVIL STATE OF CALIFORNIA

THE STATE OF CALIFORNIA OR ITS OFFICERS OR AGENTS SHALL NOT BE RESPONSIBLE FOR THE ACCURACY OR COMPLETENESS OF SCANNED COPIES OF THIS PLAN SHEET.

NOTES:

1. FOR ADDITIONAL STAGE CONSTRUCTION AND TRAFFIC HANDLING NOTES, SEE STAGE CONSTRUCTION AND TRAFFIC HANDLING PLAN SHEETS SC-1 AND SC-5.
2. FOR ADDITIONAL STAGE 3 COLD PLANE AC PAVEMENT DETAILS AND CONFORM INFORMATION, SEE STAGE CONSTRUCTION DETAILS SHEET SCD-1.

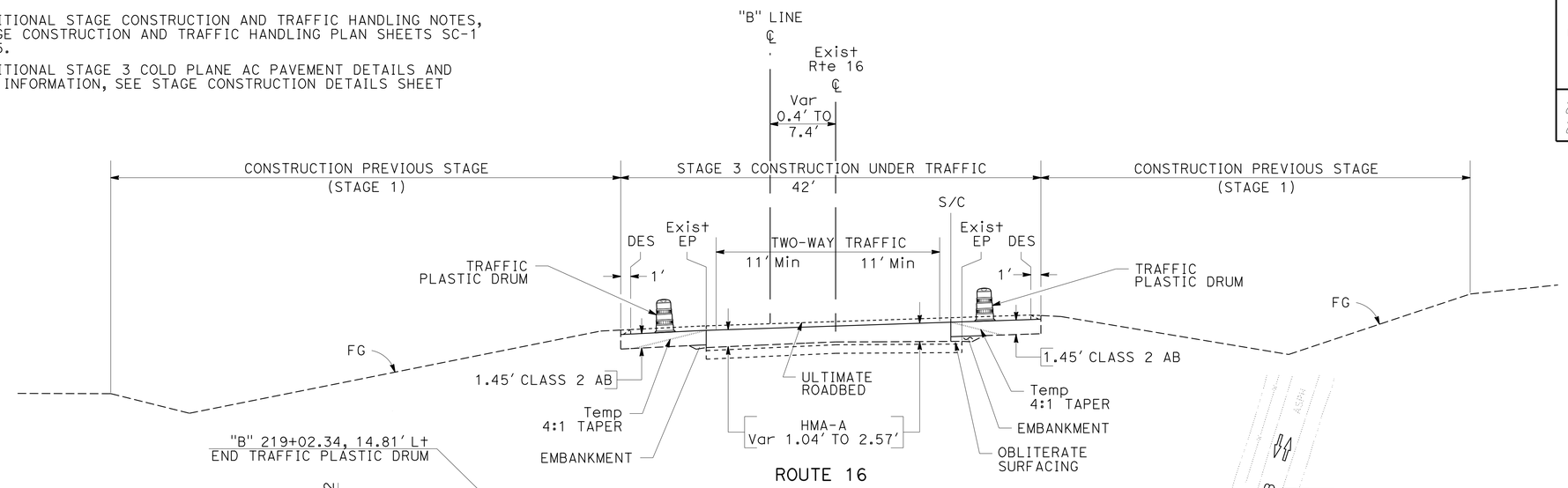

ROUTE 16

STAGE 3 TYPICAL SECTION

NO SCALE

Sta "B" 213+00 TO "B" 217+00 Lt
Sta "B" 216+00 TO "B" 217+00 Rt

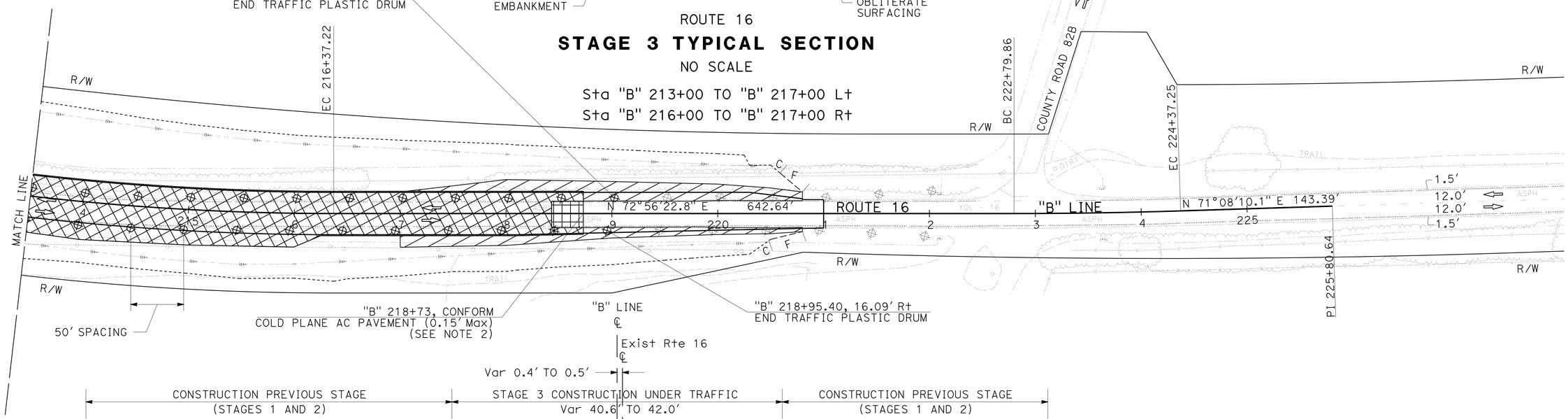

ROUTE 16

STAGE 3 TYPICAL SECTION

NO SCALE

Sta "B" 217+00 TO "B" 218+73

APPROVED FOR STAGE CONSTRUCTION AND TRAFFIC HANDLING WORK ONLY

STAGE CONSTRUCTION AND TRAFFIC HANDLING PLAN (STAGE 3)

SCALE: 1" = 50'

SC-6

STATE OF CALIFORNIA - DEPARTMENT OF TRANSPORTATION
Caltrans DIVISION OF ENGINEERING

FUNCTIONAL SUPERVISOR: FERMIN BARRIGA
CALCULATED-DESIGNED BY: JOSE LUIS VALDEZ
CHECKED BY: FERMIN BARRIGA
REVISED BY
DATE REVISED

LAST REVISION 11-04-15
DATE PLOTTED => 12-JAN-2016
TIME PLOTTED => 16:25

Dist	COUNTY	ROUTE	POST MILES TOTAL PROJECT	SHEET No.	TOTAL SHEETS
03	Yol	16	23.2/23.5	29	52

REGISTERED CIVIL ENGINEER 1-11-16 DATE

1-11-16
PLANS APPROVAL DATE

REGISTERED PROFESSIONAL ENGINEER STEVEN P. HERYFORD No. C73705 Exp. 06-30-17 CIVIL STATE OF CALIFORNIA

THE STATE OF CALIFORNIA OR ITS OFFICERS OR AGENTS SHALL NOT BE RESPONSIBLE FOR THE ACCURACY OR COMPLETENESS OF SCANNED COPIES OF THIS PLAN SHEET.

NOTES:

1. DRIVEWAY CONSTRUCTION: CONTRACTOR SHALL PROVIDE TEMPORARY PUBLIC ACCESS THROUGH THE WORK AT ALL TIMES.
2. UNDER ONE-WAY TRAFFIC CONTROL USING REVISED STANDARD PLAN RSP T13, PERFORM ROADWAY EXCAVATION, PLACE HMA-A, RHMA-G AND CONSTRUCT SAFETY EDGE, PLACE EMBANKMENT, CONSTRUCT SHOULDER AND CENTERLINE RUMBLE STRIPS AND PLACE TRAFFIC PLASTIC DRUMS AS SHOWN.
3. ALL TRAFFIC PLASTIC DRUMS SHALL BE INSTALLED ON 50' CENTERS UNLESS OTHERWISE SHOWN.
4. PLACE FINAL EROSION CONTROL. FOR MORE INFORMATION SEE EROSION CONTROL PLAN SHEETS.
5. PLACE FINAL PAVEMENT DELINEATION AND ROADSIDE SIGN. FOR MORE INFORMATION SEE PAVEMENT DELINEATION AND SIGN PLAN SHEETS.
6. FOR ADDITIONAL STAGE CONSTRUCTION AND TRAFFIC HANDLING NOTES, SEE STAGE CONSTRUCTION AND TRAFFIC HANDLING PLAN SHEET SC-1.
7. FOR ADDITIONAL COLD PLANE AC PAVEMENT DETAILS AND CONFORM INFORMATION, SEE CONSTRUCTION DETAILS SHEET C-4.

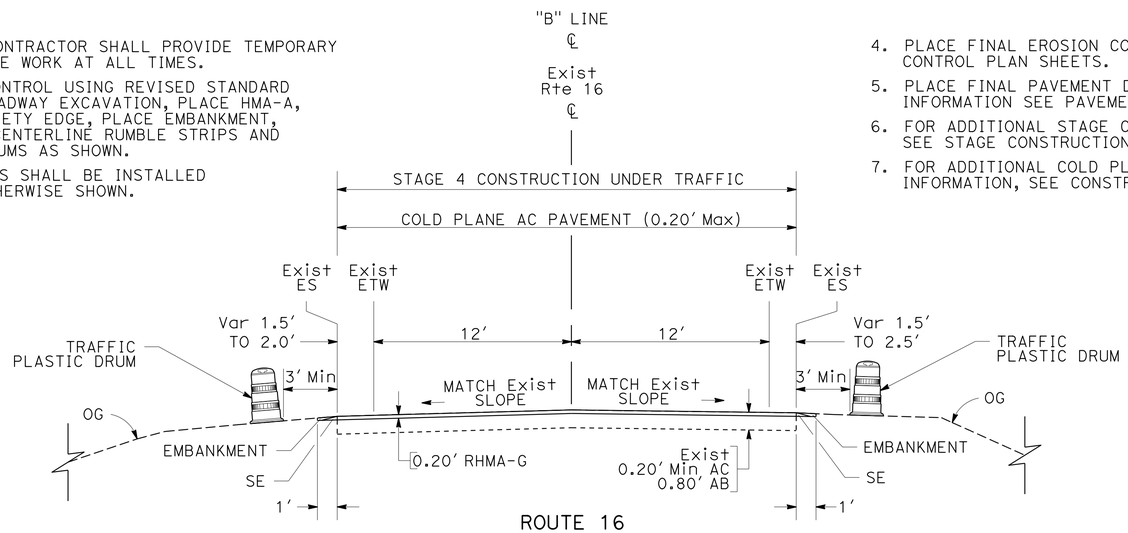

ROUTE 16

STAGE 4 TYPICAL SECTION

NO SCALE

Sta "B" 203+35 TO "B" 203+55
Sta "B" 220+80 TO "B" 221+00

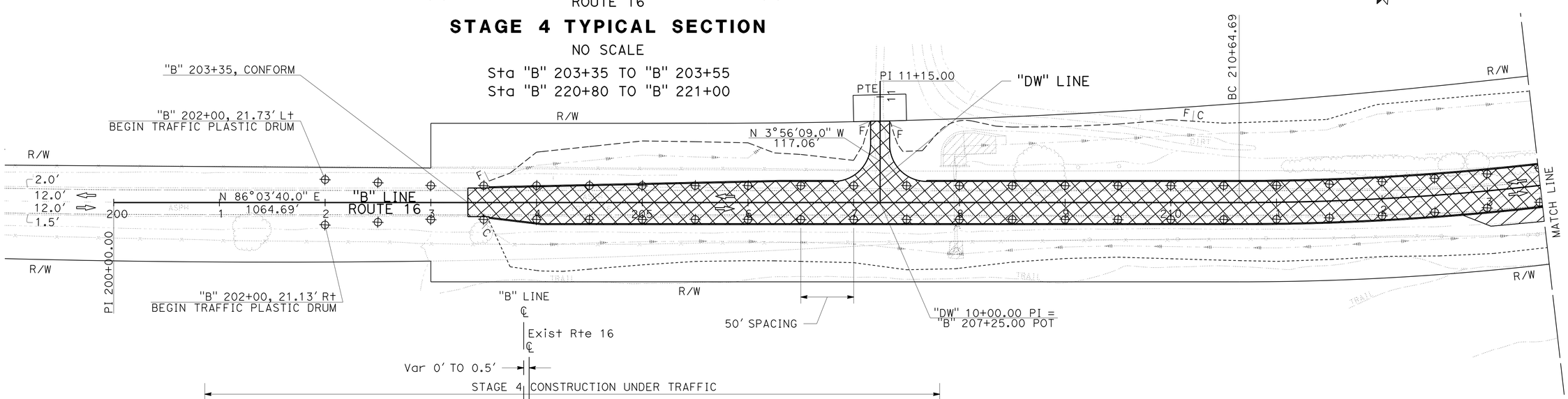

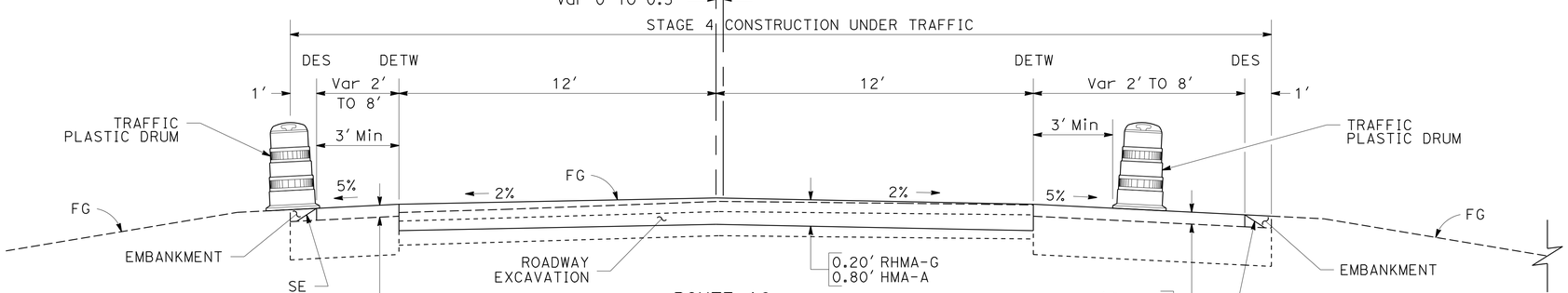

ROUTE 16

STAGE 4 TYPICAL SECTION

NO SCALE

Sta "B" 203+55 TO "B" 204+31
Sta "B" 220+00 TO "B" 220+80

APPROVED FOR STAGE CONSTRUCTION AND TRAFFIC HANDLING WORK ONLY

STAGE CONSTRUCTION AND TRAFFIC HANDLING PLAN (STAGE 4)

SCALE: 1" = 50'

SC-7

STATE OF CALIFORNIA - DEPARTMENT OF TRANSPORTATION
Caltrans® DIVISION OF ENGINEERING

FUNCTIONAL SUPERVISOR: FERMIN BARRIGA
CALCULATED-DESIGNED BY: JOSE LUIS VALDEZ
CHECKED BY: FERMIN BARRIGA
REVISED BY
DATE REVISED

LAST REVISION 11-16-15
DATE PLOTTED => 12-JAN-2016
TIME PLOTTED => 16:25

Dist	COUNTY	ROUTE	POST MILES TOTAL PROJECT	SHEET No.	TOTAL SHEETS
03	Yol	16	23.2/23.5	30	52

REGISTERED CIVIL ENGINEER 1-11-16 DATE

1-11-16
PLANS APPROVAL DATE

REGISTERED PROFESSIONAL ENGINEER STEVEN P. HERYFORD No. C73705 Exp. 06-30-17 CIVIL STATE OF CALIFORNIA

THE STATE OF CALIFORNIA OR ITS OFFICERS OR AGENTS SHALL NOT BE RESPONSIBLE FOR THE ACCURACY OR COMPLETENESS OF SCANNED COPIES OF THIS PLAN SHEET.

NOTES:

1. FOR ADDITIONAL STAGE CONSTRUCTION AND TRAFFIC HANDLING NOTES, SEE STAGE CONSTRUCTION AND TRAFFIC HANDLING PLAN SHEETS SC-1 AND SC-7.

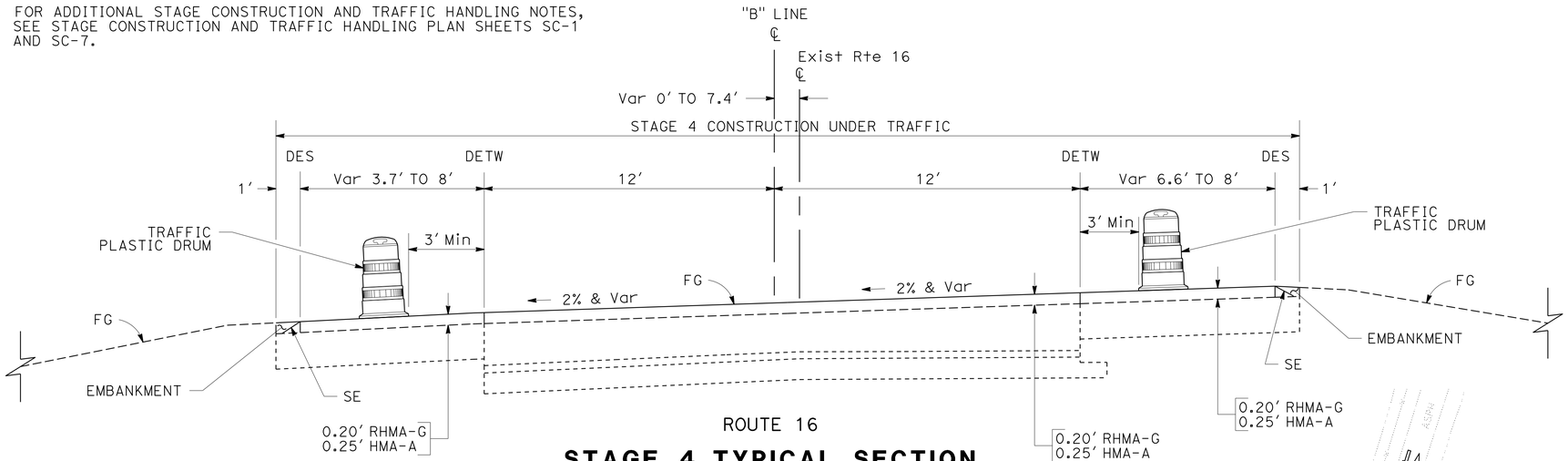

ROUTE 16

STAGE 4 TYPICAL SECTION

NO SCALE

Sta "B" 204+31 TO "B" 218+73

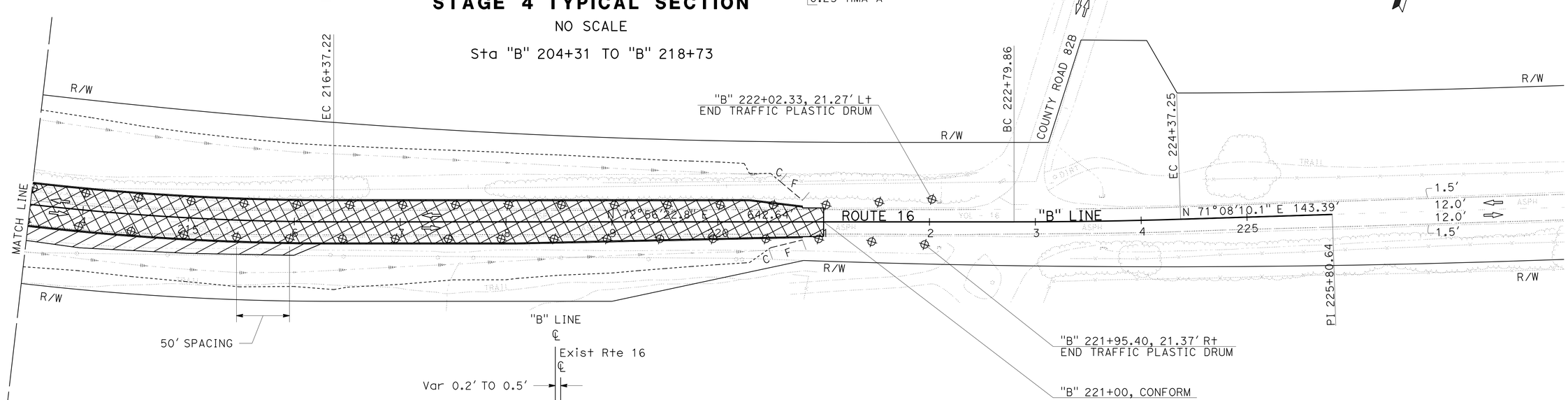

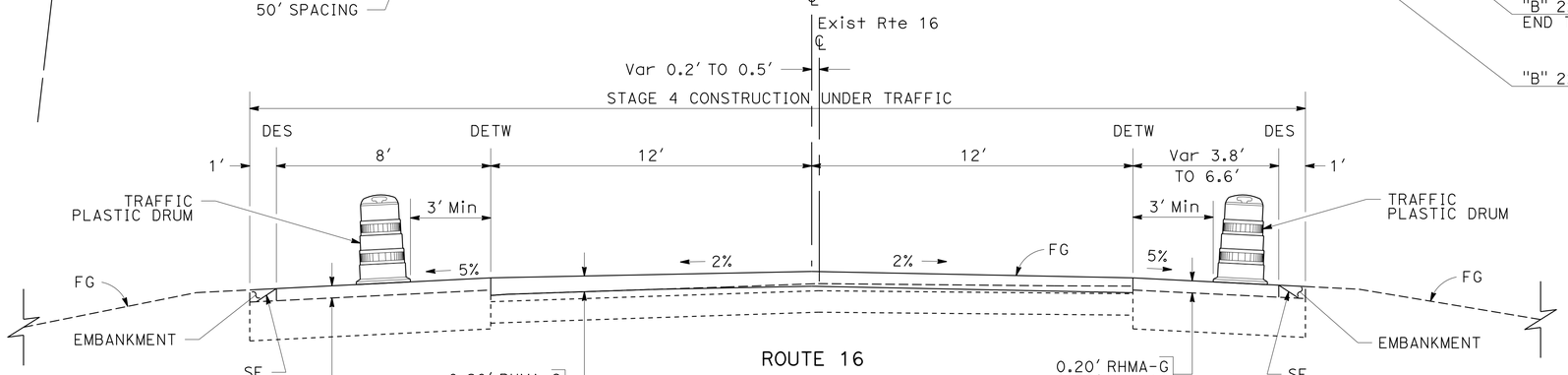

ROUTE 16

TYPICAL SECTION

NO SCALE

Sta "B" 218+73 TO "B" 220+00

APPROVED FOR STAGE CONSTRUCTION AND TRAFFIC HANDLING WORK ONLY

STAGE CONSTRUCTION AND TRAFFIC HANDLING PLAN (STAGE 4)

SCALE: 1" = 50'

SC-8

STATE OF CALIFORNIA - DEPARTMENT OF TRANSPORTATION
Caltrans® DIVISION OF ENGINEERING

FUNCTIONAL SUPERVISOR: FERMIN BARRIGA
CALCULATED-DESIGNED BY: JOSE LUIS VALDEZ
CHECKED BY: FERMIN BARRIGA
REVISED BY
DATE REVISED

LAST REVISION 11-09-15
DATE PLOTTED => 12-JAN-2016
TIME PLOTTED => 16:25

Dist	COUNTY	ROUTE	POST MILES TOTAL PROJECT	SHEET No.	TOTAL SHEETS
03	Yol	16	23.2/23.5	31	52

REGISTERED CIVIL ENGINEER 1-11-16 DATE

1-11-16
PLANS APPROVAL DATE

REGISTERED PROFESSIONAL ENGINEER STEVEN P. HERYFORD No. C73705 Exp. 06-30-17 CIVIL STATE OF CALIFORNIA

THE STATE OF CALIFORNIA OR ITS OFFICERS OR AGENTS SHALL NOT BE RESPONSIBLE FOR THE ACCURACY OR COMPLETENESS OF SCANNED COPIES OF THIS PLAN SHEET.

NOTES:

1. FOR CONFORM LOCATIONS FOR HMA (TYPE A) VARIABLE OVERLAY, SEE STAGE CONSTRUCTION AND TRAFFIC HANDLING PLAN SHEETS SC-5 AND SC-6.

ABBREVIATIONS

HMA-A HOT MIX ASPHALT (TYPE A)
RHMA-G RUBBERIZED HOT MIX ASPHALT (GAP GRADED)

LEGEND

COLD PLANE AC PAVEMENT

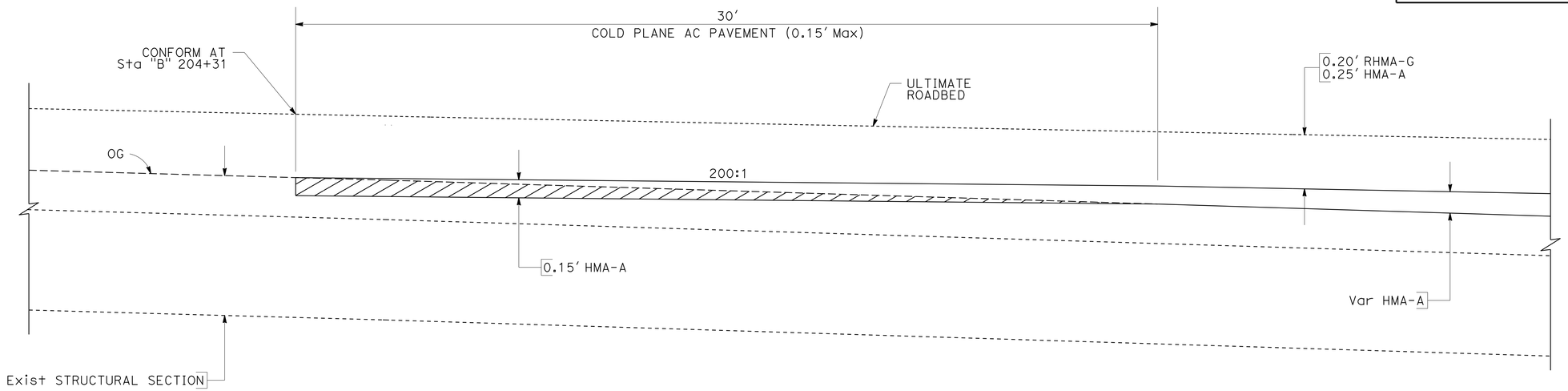

COLD PLANE AC PAVEMENT DETAIL 1 - HMA (TYPE A)

AT Sta "B" 204+31 (STAGE 3 CONSTRUCTION)

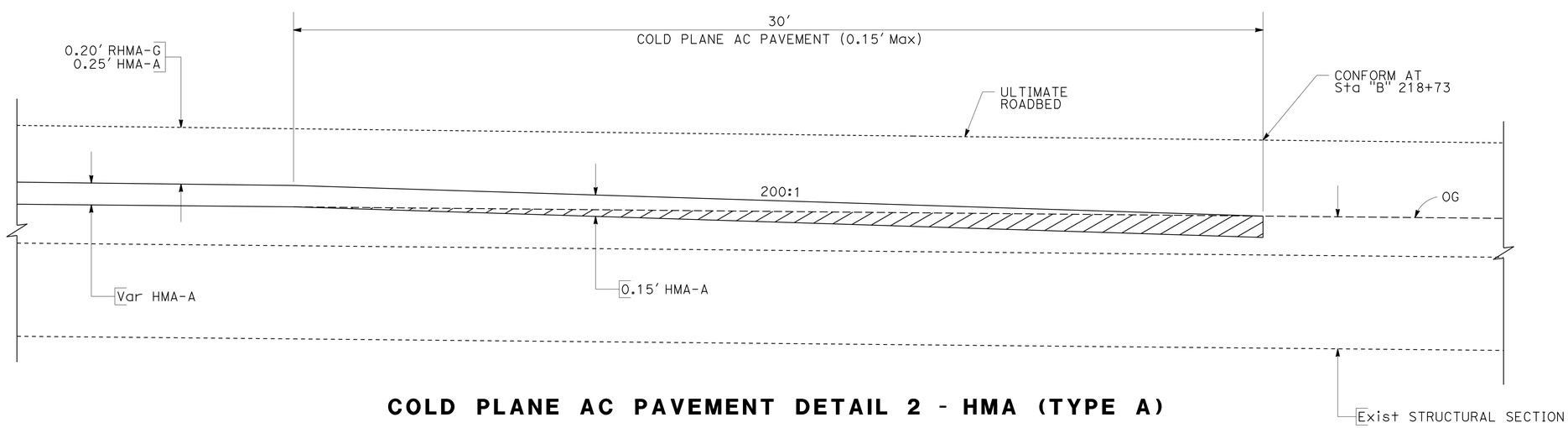

COLD PLANE AC PAVEMENT DETAIL 2 - HMA (TYPE A)

AT Sta "B" 218+73 (STAGE 3 CONSTRUCTION)

STAGE CONSTRUCTION DETAILS

NO SCALE

SCD-1

STATE OF CALIFORNIA - DEPARTMENT OF TRANSPORTATION
Caltrans® DIVISION OF ENGINEERING

FUNCTIONAL SUPERVISOR: FERMIN BARRIGA

CALCULATED-DESIGNED BY: JOSE LUIS VALDEZ
CHECKED BY: FERMIN BARRIGA

REVISED BY
DATE REVISED

LAST REVISION 09-22-15
DATE PLOTTED => 12-JAN-2016
TIME PLOTTED => 16:25

Dist	COUNTY	ROUTE	POST MILES TOTAL PROJECT	SHEET No.	TOTAL SHEETS
03	Yol	16	23.2/23.5	32	52

REGISTERED CIVIL ENGINEER 1-11-16 DATE

1-11-16
PLANS APPROVAL DATE

REGISTERED PROFESSIONAL ENGINEER STEVEN P. HERYFORD No. C73705 Exp. 06-30-17 CIVIL STATE OF CALIFORNIA

THE STATE OF CALIFORNIA OR ITS OFFICERS OR AGENTS SHALL NOT BE RESPONSIBLE FOR THE ACCURACY OR COMPLETENESS OF SCANNED COPIES OF THIS PLAN SHEET.

NOTES:

1. ALL TRAFFIC PLASTIC DRUMS SHALL BE INSTALLED ON 50' CENTERS UNLESS OTHERWISE SHOWN.

COLD PLANE AC PAVEMENT

STAGE	SHEET No.	LOCATION	(0.15' Max) * SQYD
3	SC-5/SC-6	FROM "B" 204+31 TO "B" 204+61	83.3
3	SC-5/SC-6	FROM "B" 218+43 TO "B" 218+73	83.3
		SUBTOTAL	166.6

* - SEE SUMMARY OF QUANTITIES SHEET Q-1 FOR TOTAL QUANTITY.

TRAFFIC PLASTIC DRUM

STAGE	SHEET No.	LOCATION	EA
1	SC-1/SC-2	FROM "B" 202+00 TO "B" 221+95.40 R†	41
1	SC-1/SC-2	FROM "B" 202+00 TO "B" 222+02.33 L†	41
		SUBTOTAL	82
2	SC-3	FROM "B" 202+00 TO "B" 213+47.74 R†	24
2	SC-3	FROM "B" 202+00 TO "B" 213+51.17 L†	24
2	SC-4	FROM "B" 216+45.41 TO "B" 221+95.40 R†	12
2	SC-4	FROM "B" 216+52.35 TO "B" 222+02.33 L†	12
		SUBTOTAL	72
3	SC-5/SC-6	FROM "B" 204+00 TO "B" 218+95.40 R†	31
3	SC-5/SC-6	FROM "B" 204+00 TO "B" 219+02.34 L†	31
		SUBTOTAL	62
4	SC-7/SC-8	FROM "B" 202+00 TO "B" 221+95.40 R†	41
4	SC-7/SC-8	FROM "B" 202+00 TO "B" 222+02.33 L†	41
		SUBTOTAL	82
		TOTAL	298

STAGE CONSTRUCTION AND TRAFFIC HANDLING QUANTITIES

SCQ-1

STATE OF CALIFORNIA - DEPARTMENT OF TRANSPORTATION
Caltrans DIVISION OF ENGINEERING

FUNCTIONAL SUPERVISOR: FERMIN BARRIGA
CALCULATED-DESIGNED BY: JOSE LUIS VALDEZ
CHECKED BY: FERMIN BARRIGA
REVISED BY
DATE REVISED

LAST REVISION 09-28-15
DATE PLOTTED => 12-JAN-2016
TIME PLOTTED => 16:25

Dist	COUNTY	ROUTE	POST MILES TOTAL PROJECT	SHEET No.	TOTAL SHEETS
03	Yol	16	23.2/23.5	33	52

REGISTERED CIVIL ENGINEER 1-11-16 DATE

1-11-16
PLANS APPROVAL DATE

REGISTERED PROFESSIONAL ENGINEER
JOHN R. KEBER
No. 40048
Exp. 12-31-17
CIVIL
STATE OF CALIFORNIA

THE STATE OF CALIFORNIA OR ITS OFFICERS OR AGENTS SHALL NOT BE RESPONSIBLE FOR THE ACCURACY OR COMPLETENESS OF SCANNED COPIES OF THIS PLAN SHEET.

LEGEND

- LIMIT OF STRIPING PATTERN
- CHANGE IN STRIPING PATTERN
- (No.) PAVEMENT DELINEATION DETAIL NUMBER
- DELINEATOR (TYPE E)
- s= DELINEATOR SPACING
- (Sht-No.) ROADSIDE SIGN NUMBER
- <CA> CALIFORNIA SIGN CODE
- ■ REMOVE ROADSIDE SIGN
- ▲ RESET ROADSIDE SIGN

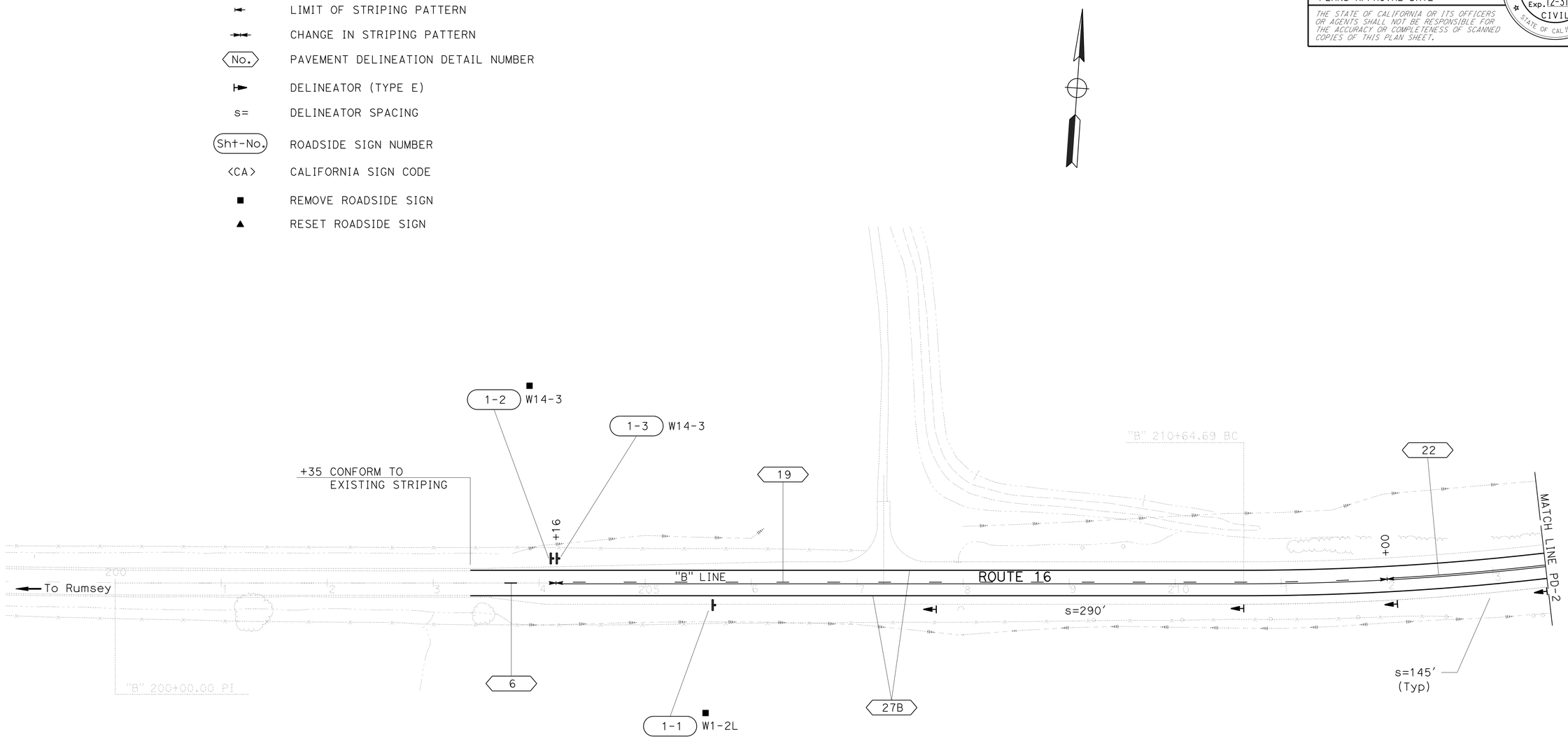

NOTES:

1. ALL LANES SHALL BE 12' WIDE.
2. ALL EXISTING SIGNS NOT SHOWN FOR REMOVAL OR RESETTING SHALL REMAIN IN PLACE.
3. ALL SIGN CODES SHOWN ARE FEDERAL SIGN CODES UNLESS OTHERWISE DESIGNATED AS CALIFORNIA SIGN CODES.

PAVEMENT DELINEATION AND SIGN PLAN

SCALE: 1"=50'

PD-1

APPROVED FOR PAVEMENT DELINEATION AND SIGN WORK ONLY

STATE OF CALIFORNIA - DEPARTMENT OF TRANSPORTATION
Caltrans
TRAFFIC

FUNCTIONAL SUPERVISOR: JOYCE K LOFTUS
CALCULATED-DESIGNED BY: CHUCK COOK
CHECKED BY: JOHN KEBER
REVISED BY
DATE REVISED

LAST REVISION 1-11-16
DATE PLOTTED => 12-JAN-2016
TIME PLOTTED => 16:25

Dist	COUNTY	ROUTE	POST MILES TOTAL PROJECT	SHEET No.	TOTAL SHEETS
03	Yol	16	23.2/23.5	34	52

REGISTERED CIVIL ENGINEER 1-11-16 DATE

1-11-16
PLANS APPROVAL DATE

REGISTERED PROFESSIONAL ENGINEER JOHN R. KEBER No. 40048 Exp. 12-31-17 CIVIL STATE OF CALIFORNIA

THE STATE OF CALIFORNIA OR ITS OFFICERS OR AGENTS SHALL NOT BE RESPONSIBLE FOR THE ACCURACY OR COMPLETENESS OF SCANNED COPIES OF THIS PLAN SHEET.

4" THERMOPLASTIC TRAFFIC STRIPE

DETAIL NUMBER	LF
19	784
22	1,800
27B	3,530
TOTAL	6,114

4" THERMOPLASTIC TRAFFIC STRIPE (BROKEN 36 - 12)

DETAIL NUMBER	LF
6	81
19	784
TOTAL	865

PAVEMENT MARKER

DETAIL NUMBER	RETROREFLECTIVE	
	TYPE D	TYPE H
	EA	EA
6	2	
19	18	34
22	76	
SUBTOTAL	96	34
TOTAL	130	

DELINEATOR

SHEET NUMBER	DELINEATOR (CLASS 1)
	TYPE E
	EA
PD-1	4
PD-2	3
TOTAL	7

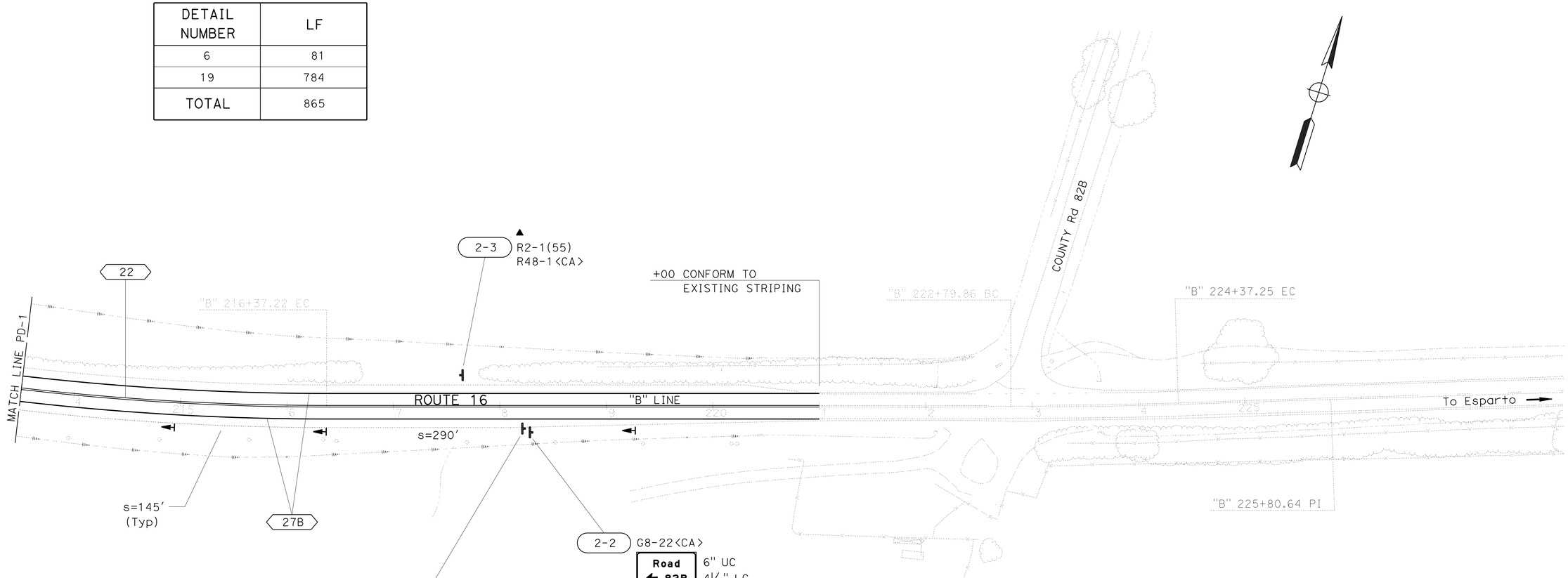

PAVEMENT DELINEATION AND SIGN PLAN

SCALE: 1"=50'

PD-2

APPROVED FOR PAVEMENT DELINEATION AND SIGN WORK ONLY

STATE OF CALIFORNIA - DEPARTMENT OF TRANSPORTATION

Caltrans

TRAFFIC

FUNCTIONAL SUPERVISOR: JOYCE K LOFTUS

CALCULATED-DESIGNED BY: CHUCK COOK

CHECKED BY: JOHN KEBER

REVISED BY / DATE REVISED

LAST REVISION 1-11-16

DATE PLOTTED => 12-JAN-2016
TIME PLOTTED => 16:25

Dist	COUNTY	ROUTE	POST MILES TOTAL PROJECT	SHEET No.	TOTAL SHEETS
03	Yol	16	23.2/23.5	35	52

REGISTERED CIVIL ENGINEER 1-11-16 DATE

1-11-16
PLANS APPROVAL DATE

REGISTERED PROFESSIONAL ENGINEER JOHN R. KEBER No. 40048 Exp. 12-31-17 CIVIL STATE OF CALIFORNIA

THE STATE OF CALIFORNIA OR ITS OFFICERS OR AGENTS SHALL NOT BE RESPONSIBLE FOR THE ACCURACY OR COMPLETENESS OF SCANNED COPIES OF THIS PLAN SHEET.

NOTES:

1. THE SIGN POST SHALL HAVE 7/16" DIAMETER PERFORATIONS 1" ON CENTER ON ALL FOUR SIDES FOR THE FULL LENGTH.
2. USE TWO DRIVE RIVETS TO FASTEN ASSEMBLED SIGN AND SIGN POST INTO ANCHOR SLEEVE. INSTALL DRIVE RIVETS INTO THE SIDES FACING TRAFFIC.
3. ALL METAL SIGN POSTS AND ANCHOR SLEEVES SHALL BE GALVANIZED.
4. ALL ANCHOR SLEEVES SHALL BE EMBEDDED IN PCC.
5. BALANCED SINGLE POST INSTALLATIONS OF SINGLE SHEET ALUMINUM PANEL SIGNS REQUIRE BACK BRACES WHEN 2'-10" OR MORE IN LENGTH.
6. WOOD BLOCK SPACERS ARE NOT REQUIRED FOR SIGNS MOUNTED ON METAL POSTS.
7. ATTACH RECTANGULAR SIGN PANEL TO SIGN POST WITH BOLTS AT TOP AND BOTTOM. CENTER MAY BE ATTACHED WITH EITHER BOLT OR 3/8" DRIVE RIVET.
8. ATTACH DIAMOND SIGN PANEL TO SIGN POST WITH BOLT AT CENTER. TOP AND BOTTOM MAY BE ATTACHED WITH EITHER BOLTS OR 3/8" DRIVE RIVETS.
9. FOR DETAILS NOT SHOWN, SEE STANDARD PLANS RS1 AND RS2.

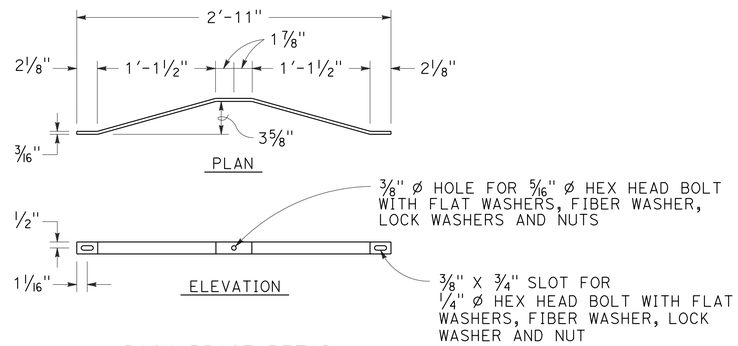

BACK BRACE DETAIL
SEE NOTE 5

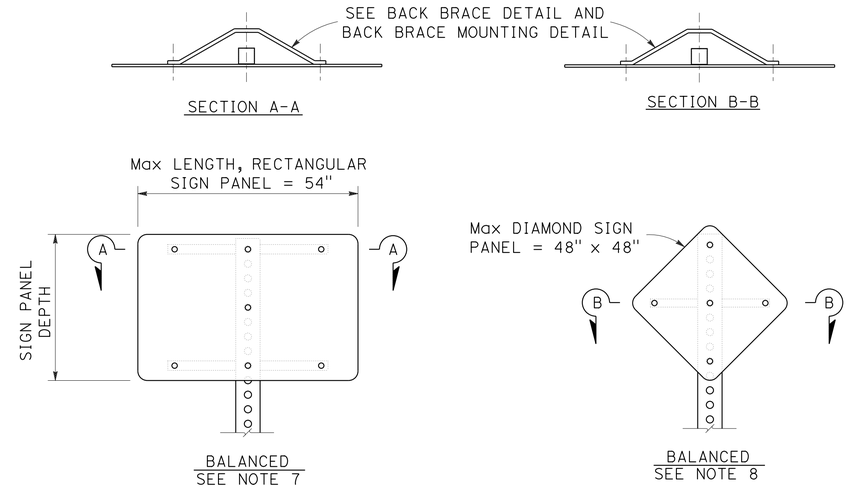

SINGLE POST INSTALLATION

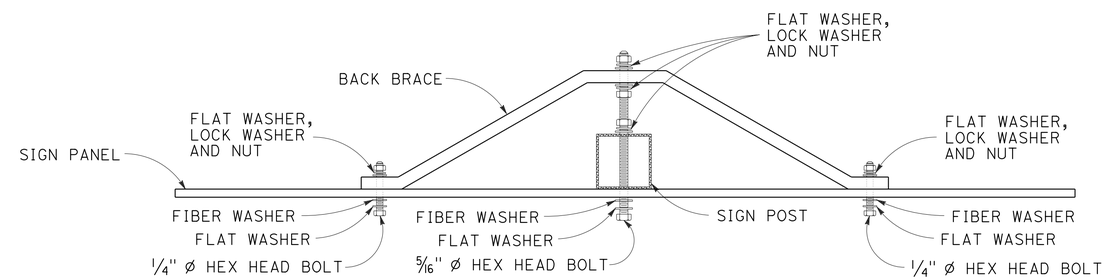

BACK BRACE MOUNTING DETAIL
SEE NOTES 6, 7 AND 8

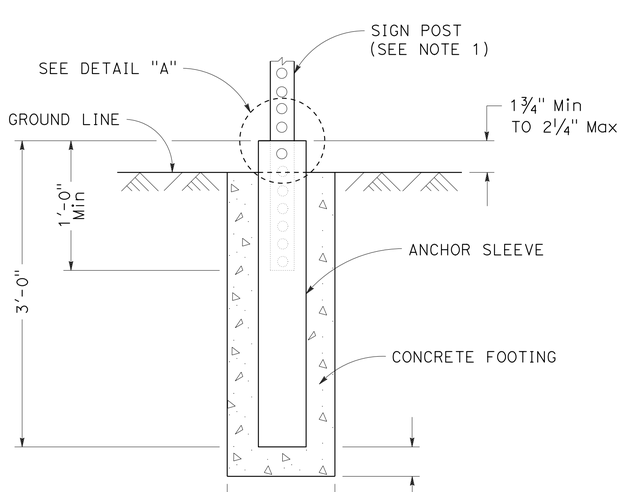

ANCHOR SLEEVE DETAIL

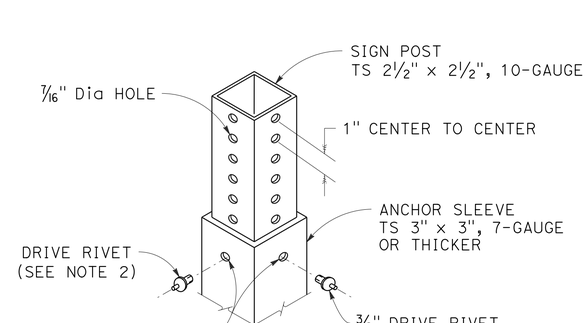

DETAIL "A"

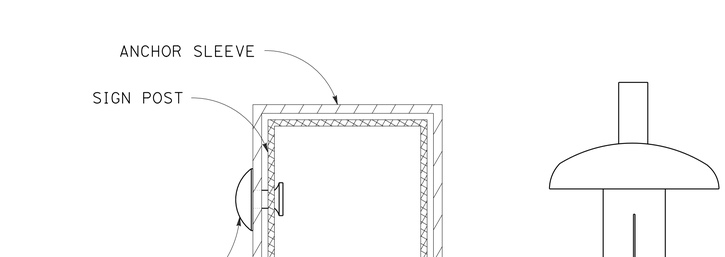

FASTENER DETAIL

SIGN DETAILS

NO SCALE

APPROVED FOR SIGN WORK ONLY

SD-1

STATE OF CALIFORNIA - DEPARTMENT OF TRANSPORTATION
Caltrans® TRAFFIC

FUNCTIONAL SUPERVISOR: JOYCE K LOFTUS
CALCULATED-DESIGNED BY: JOHN KEBER
CHECKED BY: CHUCK COOK
REVISED BY
DATE REVISED

LAST REVISION 1-11-16
DATE PLOTTED => 12-JAN-2016
TIME PLOTTED => 16:26

Dist	COUNTY	ROUTE	POST MILES TOTAL PROJECT	SHEET No.	TOTAL SHEETS
03	Yol	16	23.2/23.5	36	52

REGISTERED CIVIL ENGINEER 1-11-16 DATE

1-11-16
PLANS APPROVAL DATE

REGISTERED PROFESSIONAL ENGINEER JOHN R. KEBER No. 40048 Exp. 12-31-17 CIVIL STATE OF CALIFORNIA

THE STATE OF CALIFORNIA OR ITS OFFICERS OR AGENTS SHALL NOT BE RESPONSIBLE FOR THE ACCURACY OR COMPLETENESS OF SCANNED COPIES OF THIS PLAN SHEET.

ROADSIDE SIGN PANEL QUANTITIES

SIGN CODE	SIGN MESSAGE/DESCRIPTION	PANEL SIZE L x D	PANEL AREA	NUMBER OF PANELS	BACKGROUND SHEETING COLOR	LEGEND SHEETING COLOR	PROTECTIVE-OVERLAY FILM (PREMIUM)	RETROREFLECTIVE SHEETING (TYPE XI)	FURNISH SINGLE SHEET ALUMINUM SIGN FOR RETROREFLECTIVE SHEETING (TYPE XI) UNFRAMED 0.080"
		INCHES	SQFT					SQFT	SQFT
G8-22<CA>	SIGN 2-2, SEE DETAIL THIS SHEET	48 x 30	10.00	1	GREEN	WHITE	X	10.00	10.00
W14-3	NO PASSING ZONE	48 x 36	5.56	1	FY	BLACK	X	5.56	5.56
TOTAL								15.56	15.56

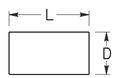

L = LENGTH OF PANEL
D = DEPTH OF PANEL

NOTES:

1. ALL SIGN CODES SHOWN ARE FEDERAL SIGN CODES UNLESS OTHERWISE DESIGNATED AS A CALIFORNIA SIGN CODE.
2. <CA> = CALIFORNIA SIGN CODE.
3. FY = FLUORESCENT YELLOW.
4. ALL SIGN PANEL BACKGROUND SHEETING SHALL BE RETROREFLECTIVE ASTM TYPE XI.
5. ALL SIGN PANEL LEGEND SHEETING, WITH THE EXCEPTION OF BLACK, SHALL BE RETROREFLECTIVE ASTM TYPE XI.
6. ALL BLACK SIGN PANEL LEGEND SHEETING SHALL BE NON-REFLECTIVE.

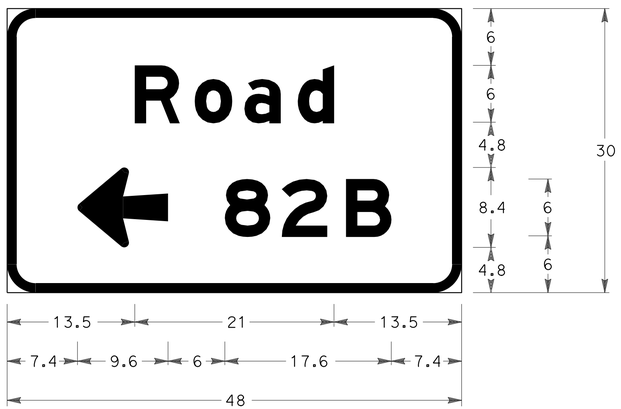

1" BORDER WITH 3" RADIUS
"Road" E Mod
"82B" E Mod
ARROW - 6"CAP-1 LINE - 9.6" 180°

G8-22<CA>
2-2

NOTE:

ALL SIGN DIMENSIONS ARE IN INCHES.

ROADSIDE SIGN QUANTITIES

SIGN NUMBER (SHT-No.)	SIGN CODE	PANEL SIZE	"C" DIM IN FEET	POST SIZE AND LENGTH	ROADSIDE SIGN	REMOVE ROADSIDE SIGN	RESET ROADSIDE SIGN	REMARKS
				METAL POST 2½"X2½"	ONE POST			
		INCHES			EA	EA	EA	
1-1	W1-2L					1		
1-2	W14-3					1		
1-3	W14-3	48 x 36	5	8′	1			
2-1	G8-22<CA>					1		
2-2	G8-22<CA>	48 x 30	5	10′	1			
2-3	R2-1(55) R48-1<CA>						1	EXISTING METAL POST
TOTAL					2	3	1	———

NOTES:

1. EXACT LOCATION AND POSITION OF ROADSIDE SIGNS TO BE DETERMINED BY THE ENGINEER.
2. POST LENGTHS GIVEN ARE APPROXIMATE.
3. "C" DIM = VERTICAL CLEARANCE EP TO BOTTOM OF SIGN PANEL.
4. ALL SIGN CODES SHOWN ARE FEDERAL SIGN CODES UNLESS OTHERWISE DESIGNATED AS A CALIFORNIA SIGN CODE.
5. <CA> = CALIFORNIA SIGN CODE.

SIGN QUANTITIES AND DETAILS

NO SCALE

APPROVED FOR SIGN WORK ONLY

SQ-1

REVISED BY | DATE REVISED
CHUCK COOK | JOHN KEBER
CALCULATED-DESIGNED BY | CHECKED BY
FUNCTIONAL SUPERVISOR: JOYCE K LOFTUS
STATE OF CALIFORNIA - DEPARTMENT OF TRANSPORTATION
Caltrans® TRAFFIC

LAST REVISION 1-11-16 | DATE PLOTTED => 12-JAN-2016 TIME PLOTTED => 16:26

Dist	COUNTY	ROUTE	POST MILES TOTAL PROJECT	SHEET No.	TOTAL SHEETS
03	Yol	16	23.2/23.5	37	52

REGISTERED CIVIL ENGINEER 1-11-16 DATE

1-11-16
PLANS APPROVAL DATE

REGISTERED PROFESSIONAL ENGINEER STEVEN P. HERYFORD No. C73705 Exp. 06-30-17 CIVIL STATE OF CALIFORNIA

THE STATE OF CALIFORNIA OR ITS OFFICERS OR AGENTS SHALL NOT BE RESPONSIBLE FOR THE ACCURACY OR COMPLETENESS OF SCANNED COPIES OF THIS PLAN SHEET.

ABBREVIATIONS

HMA-A	HOT MIX ASPHALT (TYPE A)
RHMA-G	RUBBERIZED HOT MIX ASPHALT (GAP GRADED)

ROADWAY QUANTITIES SUMMARY TABLE

SHEET No.	L+/R+	LOCATION/ STATION LIMITS "B" LINE	RHMA-G	HMA-A	CRACK TREATMENT	CLASS 2 AB
			TON	TON	LNMI	CY
		MAINLINE				
L-1/L-2	L+/R+	203+55.00 TO 220+80.00		4043.5		1562.9
L-1/L-2	L+/R+	203+35.00 TO 221+00.00	1060.0			
L-1/L-2	L+/R+	204+31.00 TO 220+00.00			0.6	
		SUBTOTAL	1060.0	4043.5	0.6	1562.9
		PRIVATE DRIVEWAY				
L-1	L+	207+25.00		25.9		35.7
		SUBTOTAL		25.9		35.7
		TOTAL	1060.0	4069.4	0.6	1598.6

TACK COAT

STATION LIMITS "B" LINE	VOLUME	DESCRIPTION
	TON	
203+35.00 TO 221+00.00	4.5	MAINLINE - HMA-A AND RHMA-G
TOTAL	4.5	

REPLACE AC SURFACING

LOCATION	EASTBOUND		WESTBOUND	
	WIDTH (N)			
	4′	12′	6′	12′
	VOLUME (CY) *			
FROM Sta "B" 204+31 TO Sta "B" 204+50 L+			1.1	
FROM Sta "B" 204+31 TO Sta "B" 204+55 R+		2.7		
FROM Sta "B" 207+67 TO Sta "B" 208+43 R+	2.8			
FROM Sta "B" 208+43 TO Sta "B" 209+50 R+		11.9		
FROM Sta "B" 219+00 TO Sta "B" 220+00 R+		11.1		
FROM Sta "B" 219+64 TO Sta "B" 220+00 L+				4.0
SUBTOTAL	2.8	25.7	1.1	4.0
TOTAL	33.6			

NOTE: EXACT LOCATIONS TO BE DETERMINED BY THE ENGINEER.
(N) - NOT A SEPARATE PAY ITEM, FOR INFORMATION ONLY.
* - DEPTH = 0.25′

COLD PLANE AC PAVEMENT

SHEET No.	STATION LIMITS	L+/R+	(0.15′ Max)	(0.20′ Max)
			SQYD	SQYD
L-1	FROM "B" 203+35.00 TO "B" 203+55.00	L+/R+		60.2
L-2	FROM "B" 220+80.00 TO "B" 221+00.00	L+/R+		59.9
	SUBTOTAL			120.1
	SUBTOTAL FROM SHEET SCQ-1		166.6	
	TOTAL		286.7	

RUMBLE STRIP (HMA, GROUND-IN INDENTATIONS)

SHEET No.	L+/R+	STATION LIMITS "B" LINE	SHOULDER	CENTERLINE
			STA	STA
L-1/L-2	L+/R+	203+55.00 TO 220+80.00		17.65
L-1/L-2	R+	204+05.00 TO 218+56.00	14.51	
L-1/L-2	L+	208+81.00 TO 220+30.00	11.49	
		TOTAL	26.00	17.65

ROADWAY EXCAVATION

STAGE	LOCATION	ROADWAY EXCAVATION	(N) EMBANKMENT
		CY	CY
1	FROM "B" 203+55 TO "B" 220+80	5572.0	5474.5
	SUBTOTAL	5572.0	5474.5
2	FROM "B" 203+55 TO "B" 213+00	472.1	225.7
2	FROM "B" 217+00 TO "B" 220+80	231.0	115.5
	SUBTOTAL	703.1	341.2
3	FROM "B" 204+31 TO "B" 218+73	0.0	206.1
	SUBTOTAL	0.0	206.1
4	FROM "B" 203+35 TO "B" 221+00	116.5	35.8
	SUBTOTAL	116.5	35.8
	TOTAL	6391.6	6057.6

(N) - NOT A SEPARATE PAY ITEM, FOR INFORMATION ONLY.

SUMMARY OF QUANTITIES

Q-1

REVISED BY | DATE REVISED
STEVE HERYFORD | JOSE LUIS VALDEZ
CALCULATED-DESIGNED BY | CHECKED BY
FUNCTIONAL SUPERVISOR: FERMIN BARRIGA
STATE OF CALIFORNIA - DEPARTMENT OF TRANSPORTATION
Caltrans DIVISION OF ENGINEERING

LAST REVISION 12-07-15 | DATE PLOTTED => 12-JAN-2016 | TIME PLOTTED => 16:26

Dist	COUNTY	ROUTE	POST MILES TOTAL PROJECT	SHEET No.	TOTAL SHEETS
03	Yol	16	23.2/23.5	38	52

REGISTERED CIVIL ENGINEER 1-11-16 DATE

1-11-16
PLANS APPROVAL DATE

REGISTERED PROFESSIONAL ENGINEER
STEVEN P. HERYFORD
No. C73705
Exp. 06-30-17
CIVIL
STATE OF CALIFORNIA

THE STATE OF CALIFORNIA OR ITS OFFICERS OR AGENTS SHALL NOT BE RESPONSIBLE FOR THE ACCURACY OR COMPLETENESS OF SCANNED COPIES OF THIS PLAN SHEET.

REMOVE GATE

SHEET No.	STATION LIMITS	L†/R†	REMOVE GATE	COMMENTS
			EA	
L-2	"B" 217+51.00	R†	2	DOUBLE GATE
		TOTAL	2	

REMOVE FENCE

SHEET No.	L†/R†	LOCATION/ STATION LIMITS "B" LINE	REMOVE FENCE
			LF
L-1/L-2	R†	203+00.00 TO 220+81.00	1791
		TOTAL	1791

TREATED WOOD WASTE

SHEET No.	STATION LIMITS	L†/R†	TREATED WOOD WASTE	COMMENTS
			LB	
PD-1	"B" 205+64.42	R†	55.06	REMOVE ROADSIDE SIGN
PD-2	"B" 218+21.89	R†	35.04	REMOVE ROADSIDE SIGN
		TOTAL	90.10	

OBLITERATE SURFACING

SHEET No.	L†/R†	LOCATION/ STATION LIMITS "B" LINE	OBLITERATE SURFACING
			SQYD
		MAINLINE	
L-1/L-2	R†	213+25.00 TO 216+75.00	38.9
		TOTAL	38.9

TEMPORARY WATER POLLUTION CONTROL QUANTITIES

STATION	TEMPORARY FIBER ROLL	TEMPORARY CHECK DAM	TEMPORARY CONSTRUCTION ENTRANCE	TEMPORARY HYDRAULIC MULCH (BONDED FIBER MATRIX)
	LF	LF	EA	SQYD
"B" 203+55.00 TO "B" 220+80.00	3360	1700	2	3775

SUMMARY OF QUANTITIES

Q-2

STATE OF CALIFORNIA - DEPARTMENT OF TRANSPORTATION
Caltrans® DIVISION OF ENGINEERING

FUNCTIONAL SUPERVISOR: FERMIN BARRIGA
CALCULATED-DESIGNED BY: STEVE HERYFORD
CHECKED BY: JOSE LUIS VALDEZ
REVISED BY / DATE REVISED

LAST REVISION 11-19-15 | DATE PLOTTED => 12-JAN-2016 | TIME PLOTTED => 16:26

Dist	COUNTY	ROUTE	POST MILES TOTAL PROJECT	SHEET No.	TOTAL SHEETS
03	Yol	16	23.2/23.5	39	52

LICENSED LANDSCAPE ARCHITECT

1-11-16
PLANS APPROVAL DATE

LICENSED LANDSCAPE ARCHITECT JAMES H. DONOHOE No. 5824 Signature 08-31-16 Renewal Date 01-11-16 Date STATE OF CALIFORNIA

THE STATE OF CALIFORNIA OR ITS OFFICERS OR AGENTS SHALL NOT BE RESPONSIBLE FOR THE ACCURACY OR COMPLETENESS OF SCANNED COPIES OF THIS PLAN SHEET.

EROSION CONTROL

SEQUENCE	ITEM	MATERIAL		APPLICATION RATE	DEPTH
		DESCRIPTION	TYPE		
STEP 1	COMPOST	COMPOST	MEDIUM	--	2"
		SEED	SEED MIX	38 LB/ACRE	--
STEP 2	HYDROMULCH	FIBER	WOOD	1500 LB/ACRE	--
		TACKIFIER	PSYLLIUM	125 LB/ACRE	--

ROLLED EROSION CONTROL PRODUCT (NETTING)

SEQUENCE	ITEM	MATERIAL		APPLICATION RATE	REMARK
		DESCRIPTION	TYPE		
AFTER COMPOST AND BEFORE HYDROMULCH	ROLLED EROSION CONTROL PRODUCT (NETTING)	NETTING	TYPE A	--	ALONG FLOWLINE
		FASTENER	8-GAUGE, 8-INCH STEEL STAPLE	PER MANUFACTURER'S RECOMMENDATIONS	--

FIBER ROLLS

SEQUENCE	ITEM	MATERIAL		REMARK
		DESCRIPTION	TYPE	
IN EROSION CONTROL AREAS FIBER ROLLS MUST BE INSTALLED BEFORE EROSION CONTROL (STEP 1 AND STEP 2)	FIBER ROLL	FIBER ROLL	TYPE B STRAW FILL 8" TO 10" Dia	TYPE 1 FIBER ROLL INSTALLATION

EROSION CONTROL QUANTITIES

STATION	SIDE	COMPOST	HYDROMULCH	ROLLED EROSION CONTROL PRODUCT (NETTING)	FIBER ROLLS
		SQFT	SQFT	SQFT	LF
"B" 203+55.00 to "B" 220+80.00	L†	90,257	90,257	10,095	
"B" 203+55.00 to "B" 220+80.00	R†	70,820	70,820	8715	
"B" 203+55.00 to "B" 220+56.94	L†				1642
"B" 204+00.00 to "B" 206+00.00	L†				199
"B" 207+70.00 to "B" 220+23.42	L†				1243
"B" 208+00.00 to "B" 210+28.00	L†				228
"B" 211+78.25 to "B" 216+22.50	L†				482
"B" 203+55.00 to "B" 220+27.58	R†				1679
"B" 203+77.70 to "B" 218+90.00	R†				1523
TOTAL		161,077	161,077	18,810	6996

SEED MIX

BOTANICAL NAME (COMMON NAME)	PERCENT GERMINATION (MINIMUM)	POUNDS PURE LIVE SEED PER ACRE (SLOPE MEASUREMENT)
ACHILLEA MILLIFOLIUM[1] (WHITE YARROW)	60	2
BROMUS CARINATUS[1] (CALIFORNIA BROME)	60	10
ELYMUS GLAUCUS[1] (BLUE WILDRYE)	60	8
ESCHOLZIA CALIFORNICA[1] (CALIFORNIA POPPY)	60	2.5
HORDEUM BRACHYANTHERUM VAR[1] (CALIFORNIA BARLEY PROSTATE)	60	8
LEYMUS TRITICOIDES[1] CREEPING WILD RYE	50	5
LUPINUS BICOLOR LINDL[1] (BICOLOR LUPINUS)	60	2.5
TOTAL		38

[1] SEED PRODUCED INLAND NORTHERN CALIFORNIA BELOW 2000' ELEVATION ONLY.

EROSION CONTROL LEGEND

ECL-1

STATE OF CALIFORNIA - DEPARTMENT OF TRANSPORTATION
Caltrans
LANDSCAPE ARCHITECTURE

SENIOR LANDSCAPE ARCHITECT: T. CHRIS JOHNSON
CALCULATED-DESIGNED BY: J. DONOHOE
CHECKED BY: T. CHRIS JOHNSON
REVISED BY
DATE REVISED

LAST REVISION 00-00-00
DATE PLOTTED => 12-JAN-2016
TIME PLOTTED => 16:26

Dist	COUNTY	ROUTE	POST MILES TOTAL PROJECT	SHEET No.	TOTAL SHEETS
03	Yol	16	23.2/23.5	40	52

LICENSED LANDSCAPE ARCHITECT

1-11-16
PLANS APPROVAL DATE

LICENSED LANDSCAPE ARCHITECT
JAMIE H. DONOHOE
No. 5823
Signature
08-31-16
Renewal Date
01-11-16
Date
STATE OF CALIFORNIA

THE STATE OF CALIFORNIA OR ITS OFFICERS OR AGENTS SHALL NOT BE RESPONSIBLE FOR THE ACCURACY OR COMPLETENESS OF SCANNED COPIES OF THIS PLAN SHEET.

NOTE:

1. FOR ACCURATE RIGHT OF WAY DATA, CONTACT RIGHT OF WAY ENGINEERING AT THE DISTRICT OFFICE.

LEGEND:

EROSION CONTROL TYPE 1

EROSION CONTROL TYPE 2

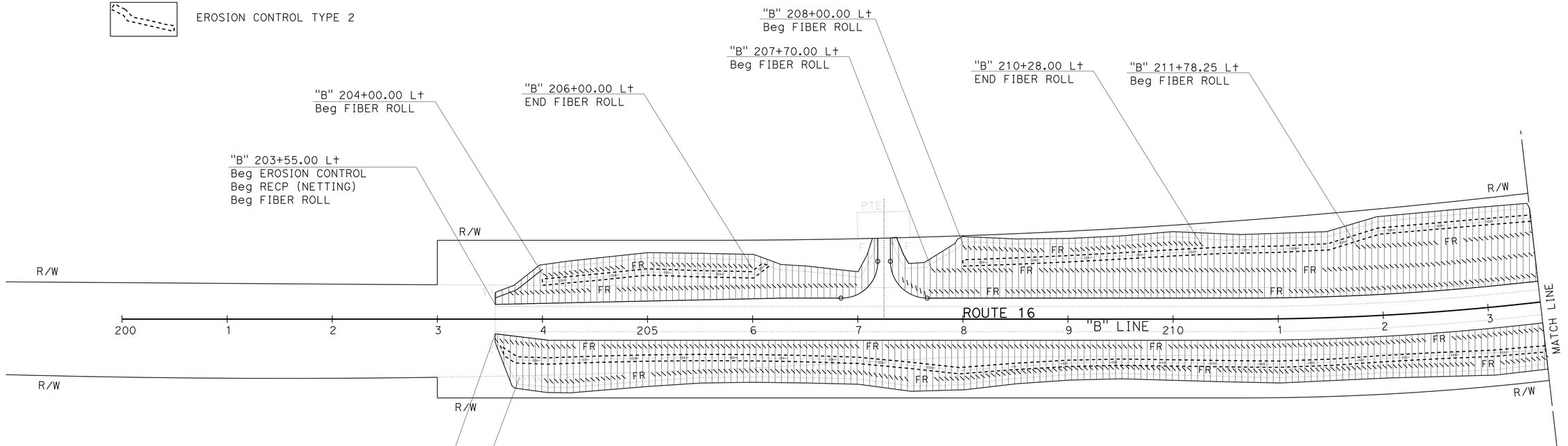

EROSION CONTROL PLAN

SCALE: 1"=50'

EC-1

STATE OF CALIFORNIA - DEPARTMENT OF TRANSPORTATION
Caltrans®
LANDSCAPE ARCHITECTURE

SENIOR LANDSCAPE ARCHITECT: T. CHRIS JOHNSON

CALCULATED-DESIGNED BY: J. DONOHOE
CHECKED BY: T. CHRIS JOHNSON

REVISED BY
DATE REVISED

LAST REVISION 00-00-00
DATE PLOTTED => 12-JAN-2016
TIME PLOTTED => 16:26

Dist	COUNTY	ROUTE	POST MILES TOTAL PROJECT	SHEET No.	TOTAL SHEETS
03	Yol	16	23.2/23.5	41	52

LICENSED LANDSCAPE ARCHITECT

1-11-16
PLANS APPROVAL DATE

LICENSED LANDSCAPE ARCHITECT
JAMES H. DONOHOE
No. 5829
Signature
08-31-16
Renewal Date
01-11-16
Date
STATE OF CALIFORNIA

THE STATE OF CALIFORNIA OR ITS OFFICERS OR AGENTS SHALL NOT BE RESPONSIBLE FOR THE ACCURACY OR COMPLETENESS OF SCANNED COPIES OF THIS PLAN SHEET.

NOTE:

1. FOR ACCURATE RIGHT OF WAY DATA, CONTACT RIGHT OF WAY ENGINEERING AT THE DISTRICT OFFICE.

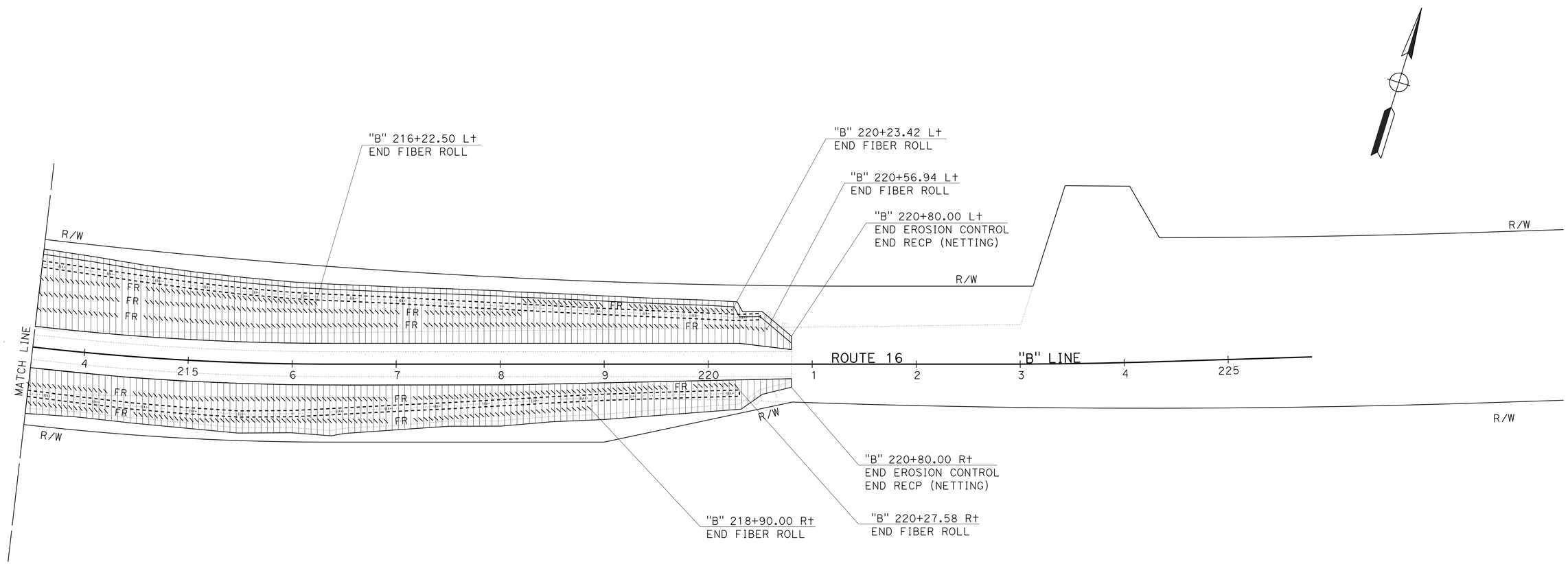

EROSION CONTROL PLAN

SCALE: 1"=50'

EC-2

REVISED BY | DATE REVISED

J. DONOHOE | CALCULATED-DESIGNED BY

T. CHRIS JOHNSON | CHECKED BY

SENIOR LANDSCAPE ARCHITECT

T. CHRIS JOHNSON

STATE OF CALIFORNIA - DEPARTMENT OF TRANSPORTATION

Caltrans®

LANDSCAPE ARCHITECTURE

LAST REVISION 00-00-00

DATE PLOTTED => 12-JAN-2016
TIME PLOTTED => 16:26

M

Maint	MAINTENANCE
Max	MAXIMUM
MB	METAL BEAM
MBB	METAL BEAM BARRIER
MBGR	METAL BEAM GUARD RAILING
Med	MEDIAN
MGS	MIDWEST GUARDRAIL SYSTEM
MH	MANHOLE
Min	MINIMUM
Misc	MISCELLANEOUS
Misc I & S	MISCELLANEOUS IRON AND STEEL
Mkr	MARKER
Mod	MODIFIED,
	MODIFY
Mon	MONUMENT
MP	METAL PLATE
MPGR	METAL PLATE GUARD RAILING
MR	MOVEMENT RATING
MSE	MECHANICALLY STABILIZED EMBANKMENT
Mt	MOUNTAIN, MOUNT
Mtl	MATERIAL
MVP	MAINTENANCE VEHICLE PULLOUT

N

N	NORTH
NB	NORTHBOUND
No.	NUMBER (MUST HAVE PERIOD)
Nos.	NUMBERS (MUST HAVE PERIOD)
NPS	NOMINAL PIPE SIZE
NS	NEAR SIDE
NSP	NEW STANDARD PLAN
NTS	NOT TO SCALE

O

Oblr	OBLITERATE
OC	OVERCROSSING
OD	OUTSIDE DIAMETER
OF	OUTSIDE FACE
OG	ORIGINAL GROUND
OGAC	OPEN GRADED ASPHALT CONCRETE
OGFC	OPEN GRADED FRICTION COURSE
OH	OVERHEAD
OHWM	ORDINARY HIGH WATER MARK
O-O	OUT TO OUT
Opp	OPPOSITE
OSD	OVERSIDE DRAIN

P

P	PAGE
PAP	PERFORATED ALUMINUM PIPE
PB	PULL BOX
PC	POINT OF CURVATURE,
	PRECAST
PCC	POINT OF COMPOUND CURVE,
	PORTLAND CEMENT CONCRETE
PCMS	PORTABLE CHANGEABLE MESSAGE SIGN
PCP	PERFORATED CONCRETE PIPE,
	PRESTRESSED CONCRETE PIPE
PCVC	POINT OF COMPOUND VERTICAL CURVE
PEC	PERMIT TO ENTER AND CONSTRUCT
Ped	PEDESTRIAN
Ped OC	PEDESTRIAN OVERCROSSING
Ped UC	PEDESTRIAN UNDERCROSSING
Perm Mtl	PERMEABLE MATERIAL

P continued

PG	PROFILE GRADE
PI	POINT OF INTERSECTION
PJP	PARTIAL JOINT PENETRATION
Pkwy	PARKWAY
ℙ,PL	PLATE
P/L	PROPERTY LINE
PM	POST MILE,
	TIME FROM NOON TO MIDNIGHT
PN	PAVING NOTCH
POC	POINT OF HORIZONTAL CURVE
POT	POINT OF TANGENT
POVC	POINT OF VERTICAL CURVE
PP	PIPE PILE,
	PLASTIC PIPE,
	POWER POLE
PPL	PREFORMED PERMEABLE LINER
PPP	PERFORATED PLASTIC PIPE
PRC	POINT OF REVERSE CURVE
PRF	PAVEMENT REINFORCING FABRIC
PRVC	POINT OF REVERSE VERTICAL CURVE
PS&E	PLANS, SPECIFICATIONS AND ESTIMATES
PS, P/S	PRESTRESSED
PSP	PERFORATED STEEL PIPE
PT	POINT OF TANGENCY
PVC	POLYVINYL CHLORIDE
Pvmt	PAVEMENT

Q

Qty	QUANTITY

R

R	RADIUS
R & D	REMOVE AND DISPOSE
R & S	REMOVE AND SALVAGE
R/C	RATE OF CHANGE
RCA	REINFORCED CONCRETE ARCH
RCB	REINFORCED CONCRETE BOX
RCP	REINFORCED CONCRETE PIPE
RCPA	REINFORCED CONCRETE PIPE ARCH
Rd	ROAD
Reinf	REINFORCED,
	REINFORCEMENT,
	REINFORCING
Rel	RELOCATE
Repl	REPLACEMENT
Ret	RETAINING
Rev	REVISED, REVISION
Rdwy	ROADWAY
RHMA	RUBBERIZED HOT MIX ASPHALT
Riv	RIVER
RM	ROAD-MIXED
RP	RADIUS POINT,
	REFERENCE POINT
RR	RAILROAD
RSP	ROCK SLOPE PROTECTION,
	REVISED STANDARD PLAN
Rt	RIGHT
Rte	ROUTE
RW	REDWOOD,
	RETAINING WALL
R/W	RIGHT OF WAY
Rwy	RAILWAY

S

S	SOUTH,
	SUPPLEMENT
SAE	STRUCTURE APPROACH EMBANKMENT
Salv	SALVAGE
SAPP	STRUCTURAL ALUMINUM PLATE PIPE
SB	SOUTHBOUND
SC	SAND CUSHION
SCSP	SLOTTED CORRUGATED STEEL PIPE
SD	STORM DRAIN
Sec	SECOND,
	SECTION
Sep	SEPARATION
SG	SUBGRADE
Shld	SHOULDER
Sht	SHEET
Sim	SIMILAR
℄	STATION LINE
SM	SELECTED MATERIAL
Spec	SPECIAL,
	SPECIFICATIONS
SPP	SLOTTED PLASTIC PIPE
SS	SLOPE STAKE
SSBM	STRAP AND SADDLE BRACKET METHOD
SSD	STRUCTURAL SECTION DRAIN
SSPA	STRUCTURAL STEEL PLATE ARCH
SSPP	STRUCTURAL STEEL PLATE PIPE
SSPPA	STRUCTURAL STEEL PLATE PIPE ARCH
SSRP	STEEL SPIRAL RIB PIPE
St	STREET
Sta	STATION
STBB	SINGLE THRIE BEAM BARRIER
Std	STANDARD
Str	STRUCTURE
Surf	SURFACING
SW	SIDEWALK,
	SOUND WALL
Swr	SEWER
Sym	SYMMETRICAL
S4S	SURFACE 4 SIDES

T

T	SEMI-TANGENT
Tan	TANGENT
TBB	THRIE BEAM BARRIER
Tbr	TIMBER
TC	TOP OF CURB
TCB	TRAFFIC CONTROL BOX
TCE	TEMPORARY CONSTRUCTION EASEMENT
Tel	TELEPHONE
Temp	TEMPORARY
TG	TOP OF GRADE
Tot	TOTAL
TP	TELEPHONE POLE
TPB	TREATED PERMEABLE BASE
TPM	TREATED PERMEABLE MATERIAL
Trans	TRANSITION

T continued

TS	TRANSVERSE,
	TRAFFIC SIGNAL,
	TUBULAR STEEL
Typ	TYPICAL

U

UC	UNDERCROSSING
UD	UNDERDRAIN
UG	UNDERGROUND
UON	UNLESS OTHERWISE NOTED
UP	UNDERPASS

V

V	VALVE,
	DESIGN SPEED
Var	VARIABLE,
	VARIES
VC	VERTICAL CURVE
VCP	VITRIFIED CLAY PIPE
Vert	VERTICAL
Via	VIADUCT
Vol	VOLUME

W

W	WEST,
	WIDTH
WB	WESTBOUND
WH	WEEP HOLE
WM	WIRE MESH
WS	WATER SURFACE
WSP	WELDED STEEL PIPE
Wt	WEIGHT
WV	WATER VALVE
WW	WINGWALL
WWLOL	WINGWALL LAYOUT LINE

X

X Sec	CROSS SECTION
Xing	CROSSING

Y

Yr	YEAR
Yrs	YEARS

Dist	COUNTY	ROUTE	POST MILES TOTAL PROJECT	SHEET No.	TOTAL SHEETS
03	Yol	16	23.2/23.5	42	52

Grace M. Tsushima
REGISTERED CIVIL ENGINEER

July 19, 2013
PLANS APPROVAL DATE

REGISTERED PROFESSIONAL ENGINEER
Grace M. Tsushima
No. C49814
Exp. 9-30-14
CIVIL
STATE OF CALIFORNIA

THE STATE OF CALIFORNIA OR ITS OFFICERS OR AGENTS SHALL NOT BE RESPONSIBLE FOR THE ACCURACY OR COMPLETENESS OF SCANNED COPIES OF THIS PLAN SHEET.

TO ACCOMPANY PLANS DATED 1-11-16

UNIT OF MEASUREMENT SYMBOLS:

Some of the symbols used in the project plan quantity tables and in the Bid Item List are:

TABLE A

SYMBOL USED	DEFINITIONS
ACRE	ACRE
CF	CUBIC FOOT
CY	CUBIC YARD
EA	EACH
GAL	GALLON
LB	POUND
LF	LINEAR FOOT
SQFT	SQUARE FOOT
SQYD	SQUARE YARD
STA	100 FEET
TAB	TABLET
TON	2,000 POUNDS

Some of the symbols used in the plans other than in the project plan quantity tables are:

TABLE B

SYMBOL USED	DEFINITIONS
ksi	KIPS PER SQUARE INCH
ksf	KIPS PER SQUARE FOOT
psi	POUNDS PER SQUARE INCH
psf	POUNDS PER SQUARE FOOT
lb/ft^3, pcf	POUNDS PER CUBIC FOOT
tsf	TONS PER SQUARE FOOT
mph, MPH *	MILES PER HOUR
ø	NOMINAL DIAMETER
oz	OUNCE
lb	POUND
kip	1,000 POUNDS
cal	CALORIE
ft	FOOT OR FEET
gal	GALLON

* For use on a sign panel only

STATE OF CALIFORNIA
DEPARTMENT OF TRANSPORTATION

ABBREVIATIONS (SHEET 2 OF 2)

NO SCALE

RSP A10B DATED JULY 19, 2013 SUPERSEDES STANDARD PLAN A10B DATED MAY 20, 2011 - PAGE 2 OF THE STANDARD PLANS BOOK DATED 2010.

REVISED STANDARD PLAN RSP A10B

2010 REVISED STANDARD PLAN RSP A10B

6-7-13

Dist	COUNTY	ROUTE	POST MILES TOTAL PROJECT	SHEET No.	TOTAL SHEETS
03	Yol	16	23.2/23.5	43	52

REGISTERED CIVIL ENGINEER

July 18, 2014
PLANS APPROVAL DATE

REGISTERED PROFESSIONAL ENGINEER
Carl M. Duan
No. C59976
Exp. 6-30-16
CIVIL
STATE OF CALIFORNIA

THE STATE OF CALIFORNIA OR ITS OFFICERS OR AGENTS SHALL NOT BE RESPONSIBLE FOR THE ACCURACY OR COMPLETENESS OF SCANNED COPIES OF THIS PLAN SHEET.

TO ACCOMPANY PLANS DATED 1-11-16

2010 REVISED STANDARD PLAN RSP A62DA

DESIGN NOTES:

Design: AASHTO LRFD Bridge Design Specifications, 4th edition with California Amendments. ACPA DESIGN DATA 1, October 2007. INDIRECT DESIGN METHOD

Soil: w Fe = 162 pcf Installation Type 1
w Fe = 168 pcf Installation Types 2 & 3
w = Unit weight of soil (pcf)
Fe = Soil-structure interaction factor

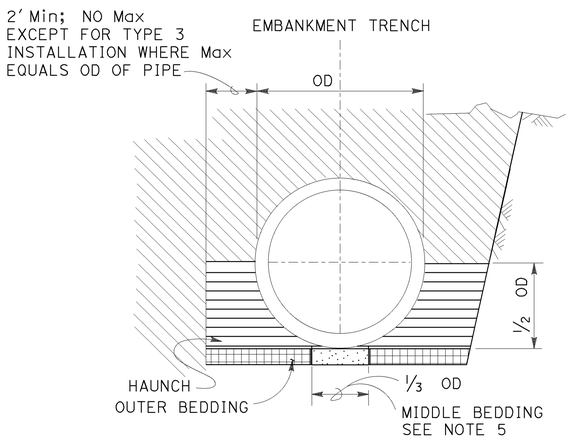

BACKFILL

LEGEND:

- ROADWAY EMBANKMENT
- STRUCTURE BACKFILL (CULVERT) FOR HAUNCH SEE NOTE 6
- STRUCTURE BACKFILL (CULVERT) FOR OUTER BEDDING SEE NOTE 6
- LOOSE BACKFILL
- STRUCTURE EXCAVATION (CULVERT)

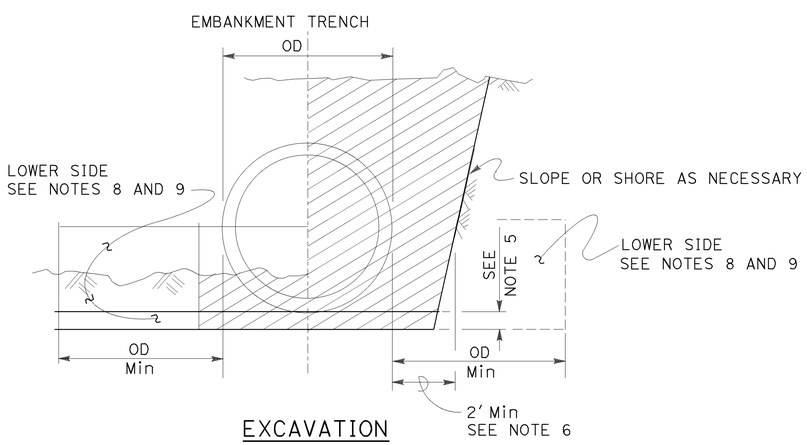

EXCAVATION

INSTALLATION TYPE 1:

The haunch and outer bedding shall be compacted to a minimum 90 percent relative compaction. In addition, the minimum sand equivalent in these areas shall be 30 and the maximum percentage passing the No. 200 sieve size shall be 12.

INSTALLATION TYPE 2:

The haunch and outer bedding shall be compacted to a minimum 90 percent relative compaction. In addition, the minimum sand equivalent in these areas shall be 25.

INSTALLATION TYPE 3:

The haunch and outer bedding shall be compacted to a minimum 85 percent relative compaction. 90 percent relative compaction will be required where the fill over the pipe is less than 4′-0″ or ½ OD. In addition, the minimum sand equivalent in these areas shall be 25 and the material shall not contain rocks, broken concrete, or other solid material exceeding 3″ in greatest dimension.

INSTALLATION TYPE 1

MINIMUM CLASS AND D-LOAD	COVER	
	60″ Dia AND SMALLER	OVER 60″ Dia TO 120″ Dia Max
CLASS II 1000D	14.9′	12.9′
CLASS III 1350D	15.0′ - 21.9′	13.0′ - 18.9′
CLASS III SPECIAL 1700D	22.0′ - 27.9′	19.0′ - 24.9′
CLASS IV 2000D	28.0′ - 32.9′	25.0′ - 29.9′
CLASS IV SPECIAL 2500D	33.0′ - 41.9′	30.0′ - 38.9′
CLASS V 3000D	42.0′ - 49.9′	39.0′ - 46.9′
CLASS V SPECIAL 3600D	50.0′ - 60.0′	47.0′ - 58.0′

INSTALLATION TYPE 2

MINIMUM CLASS AND D-LOAD	COVER	
	60″ Dia AND SMALLER	OVER 60″ Dia TO 120″ Dia Max
CLASS II 1000D	11.9′	9.9′
CLASS III 1350D	12.0′ - 15.9′	10.0′ - 14.9′
CLASS III SPECIAL 1700D	16.0′ - 20.9′	15.0′ - 19.9′
CLASS IV 2000D	21.0′ - 24.9′	20.0′ - 23.9′
CLASS IV SPECIAL 2500D	25.0′ - 31.9′	24.0′ - 30.9′
CLASS V 3000D	32.0′ - 37.9′	31.0′ - 37.9′
CLASS V SPECIAL 3600D	38.0′ - 46.0′	38.0′ - 46.0′

INSTALLATION TYPE 3

MINIMUM CLASS AND D-LOAD	COVER	
	60″ Dia AND SMALLER	OVER 60″ Dia TO 120″ Dia Max
CLASS II 1000D	8.9′	5.9′
CLASS III 1350D	9.0′ - 11.9′	6.0′ - 10.9′
CLASS III SPECIAL 1700D	12.0′ - 15.9′	11.0′ - 13.9′
CLASS IV 2000D	16.0′ - 18.9′	14.0′ - 17.9′
CLASS IV SPECIAL 2500D	19.0′ - 24.9′	18.0′ - 22.9′
CLASS V 3000D	25.0′ - 29.9′	23.0′ - 28.9′
CLASS V SPECIAL 3600D	30.0′ - 36.0′	29.0′ - 35.0′

NOTES:

1. Unless otherwise shown on the plans or specified in the special provision, the Contractor shall have the option of selecting the class of RCP and the type of installation to be used, provided the height of cover does not exceed the value shown for the RCP selected.
   Example: 24″ RCP culvert with maximum cover of 24′-0″ the options are:
   a) Class III Special or stronger with Installation Type 1.
   b) Class IV or stronger with Installation Type 2.
   c) Class IV Special or stronger with Installation Type 3.
   Cover is defined as the maximum vertical distance from top of the pipe to finished grade within the length of any given culvert.
2. The class of RCP and Installation Type selected shall be the same throughout the length of any given culvert.
3. The "length of any culvert" is defined as the culvert between:
   a) Successive drainage structure (inlets, junction boxes, headwalls, etc.).
   b) A drainage structure and the inlet or outlet end of the culvert.
   c) The inlet and outlet end of the culvert when there are no intervening drainage structures.
4. Oval and arch shaped RCP shall not be used.
5. Bedding depth: 1/25 OD Min, not less than 3″.
6. Slurry cement backfill may be substituted for backfill in the outer bedding and haunch areas. If slurry is used, the outer and middle beddings shall be omitted. Prior to installation, the soil under the middle ⅓ of the outside diameter of the pipe shall be softened by scarifying or other means to a minimum depth of 1/25 OD, but not less than 3″. Where slurry cement backfill is used, clear distance to trench wall may be reduced as set forth in the Standard Specifications.
7. Backfill shall be placed full width of excavation except where dimensions are shown for backfill width or thickness. Dimensions shown are minimum.
8. Lower side shall be suitable material as determined by the Engineer. Otherwise it shall be considered unsuitable as set forth in of the Standard Specifications. See Note 9.
9. Where the pipe is placed in a trench, if the trench walls are sloped at 5 vertical to 1 horizontal or steeper for at least 90 percent of the trench height or up to not less than 12″ from the grading plane, the firmness of the soil in the lower side need not be considered.
10. Non-reinforced precast concrete pipe sizes 3′-0″ or smaller may be placed under installation Types 1, 2 or 3.

STATE OF CALIFORNIA
DEPARTMENT OF TRANSPORTATION

EXCAVATION AND BACKFILL CONCRETE PIPE CULVERTS INDIRECT DESIGN METHOD

NO SCALE

RSP A62DA DATED JULY 18, 2014 SUPERSEDES STANDARD PLAN A62DA DATED MAY 20, 2011 - PAGE 24 OF THE STANDARD PLANS BOOK DATED 2010.

REVISED STANDARD PLAN RSP A62DA

Dist	COUNTY	ROUTE	POST MILES TOTAL PROJECT	SHEET No.	TOTAL SHEETS
03	Yol	16	23.2/23.5	44	52

REGISTERED CIVIL ENGINEER

October 30, 2015
PLANS APPROVAL DATE

REGISTERED PROFESSIONAL ENGINEER
Carl M. Duan
No. C59976
Exp. 6-30-16
CIVIL
STATE OF CALIFORNIA

THE STATE OF CALIFORNIA OR ITS OFFICERS OR AGENTS SHALL NOT BE RESPONSIBLE FOR THE ACCURACY OR COMPLETENESS OF SCANNED COPIES OF THIS PLAN SHEET.

TO ACCOMPANY PLANS DATED 1-11-16

2010 REVISED STANDARD PLAN RSP A62F

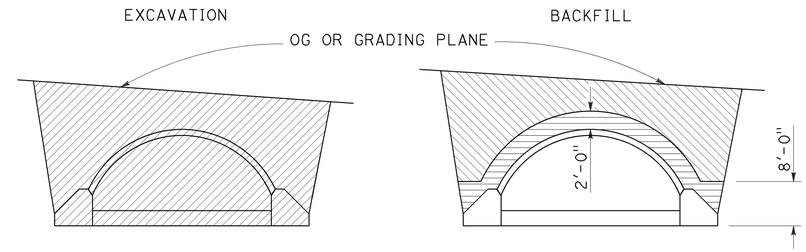

IN TRENCH

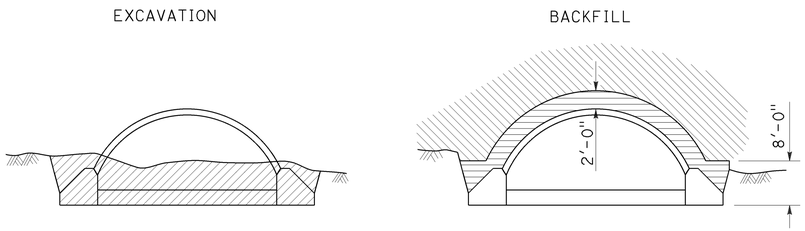

IN EMBANKMENT

STRUCTURAL STEEL PLATE ARCHES

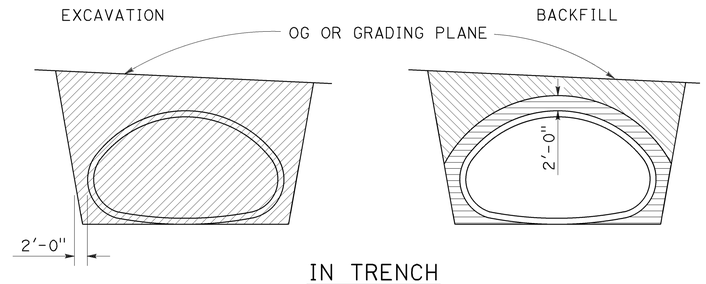

IN TRENCH

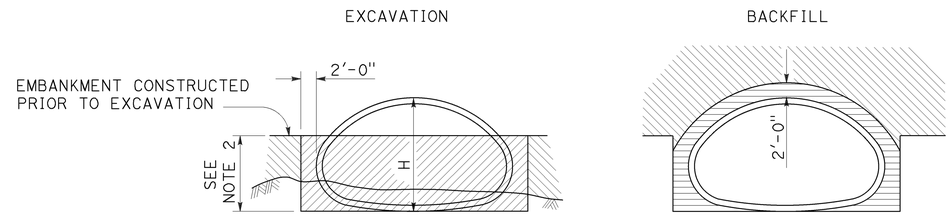

IN EMBANKMENT

STRUCTURAL STEEL PLATE PIPE ARCHES AND VEHICULAR UNDERCROSSING

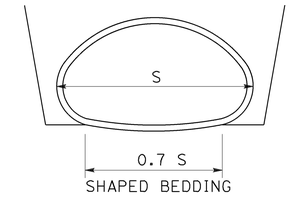

SHAPED BEDDING

S = Larger than 84"

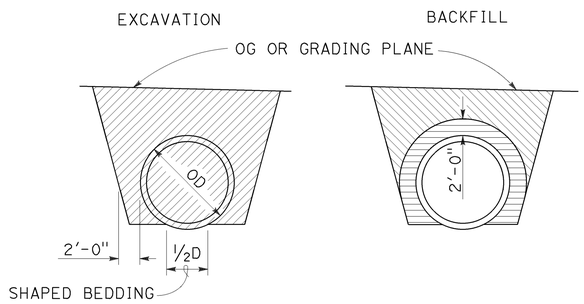

IN TRENCH

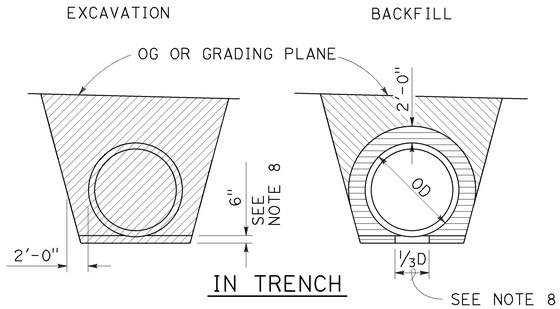

IN TRENCH

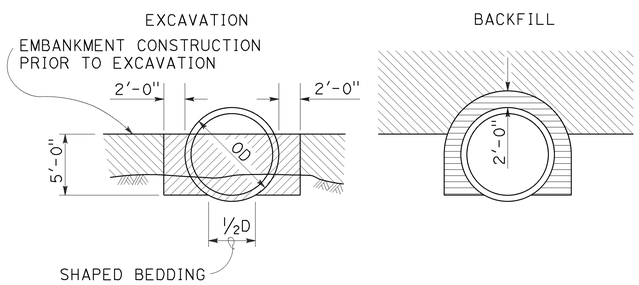

IN EMBANKMENT

PIPES

Larger than 84"

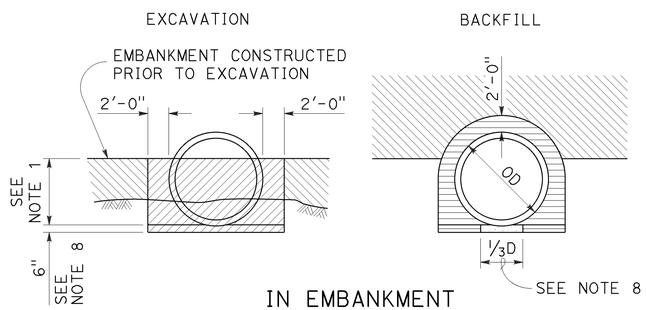

IN EMBANKMENT

METAL AND PLASTIC PIPES AND CORRUGATED METAL PIPE ARCHES

84" or Smaller

NOTES:

1. PIPES: 30" minimum for diameters up to and including 42" then ⅔ diameter but no more than 60" required. CORRUGATED METAL PIPE ARCHES: 30" maximum.
2. ⅔ H up to 60" maximum.
3. Slope or shore excavation sides as necessary.
4. Backfill shall be placed full width of excavation except as noted.
5. Diagrams do not apply to overside drains.
6. Dimensions shown are minimum.
7. Construction strutting of structural steel plate pipe, arches and vehicular undercrossing to be used when shown on the project plans. When shown, see Standard Plan D88A for strutting requirements.
8. Excavation below pipe and 80% relative compaction requirements for plastic pipes only.
9. D is the inside diameter (ID) of the pipe.

LEGEND

- STRUCTURE EXCAVATION (CULVERT)
- ROADWAY EMBANKMENT
- STRUCTURE BACKFILL (CULVERT) 95% RELATIVE COMPACTION
- STRUCTURE BACKFILL (CULVERT) 80% RELATIVE COMPACTION

STATE OF CALIFORNIA
DEPARTMENT OF TRANSPORTATION

EXCAVATION AND BACKFILL METAL AND PLASTIC CULVERTS

NO SCALE

RSP A62F DATED OCTOBER 30, 2015 SUPERSEDES STANDARD PLAN A62F DATED MAY 20, 2011 - PAGE 26 OF THE STANDARD PLANS BOOK DATED 2010.

REVISED STANDARD PLAN RSP A62F

10-13-15

Dist	COUNTY	ROUTE	POST MILES TOTAL PROJECT	SHEET No.	TOTAL SHEETS
03	Yol	16	23.2/23.5	45	52

REGISTERED CIVIL ENGINEER

October 30, 2015
PLANS APPROVAL DATE

REGISTERED PROFESSIONAL ENGINEER Srikanth N. Balasubramanian No. C56426 Exp. 6-30-17 CIVIL STATE OF CALIFORNIA

THE STATE OF CALIFORNIA OR ITS OFFICERS OR AGENTS SHALL NOT BE RESPONSIBLE FOR THE ACCURACY OR COMPLETENESS OF SCANNED COPIES OF THIS PLAN SHEET.

TO ACCOMPANY PLANS DATED 1-11-16

ABBREVIATIONS:

TE TAPERED EDGE

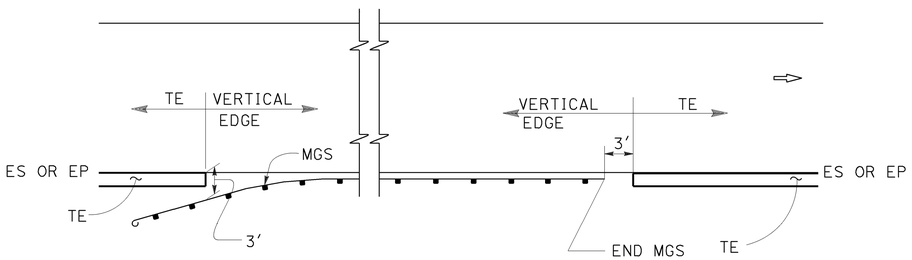

MGS

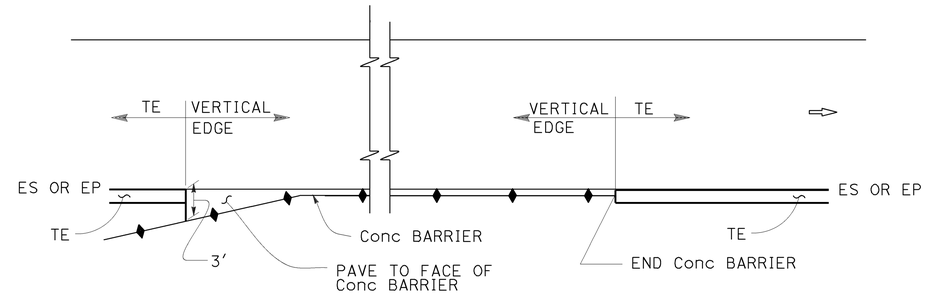

CONCRETE BARRIER

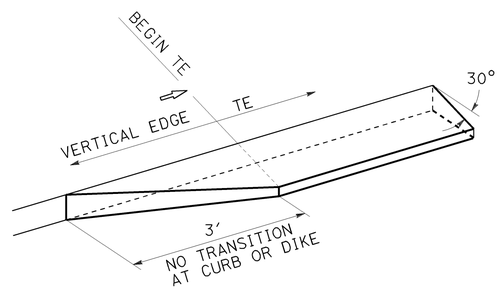

TRANSITION DETAIL FOR CONCRETE ONLY

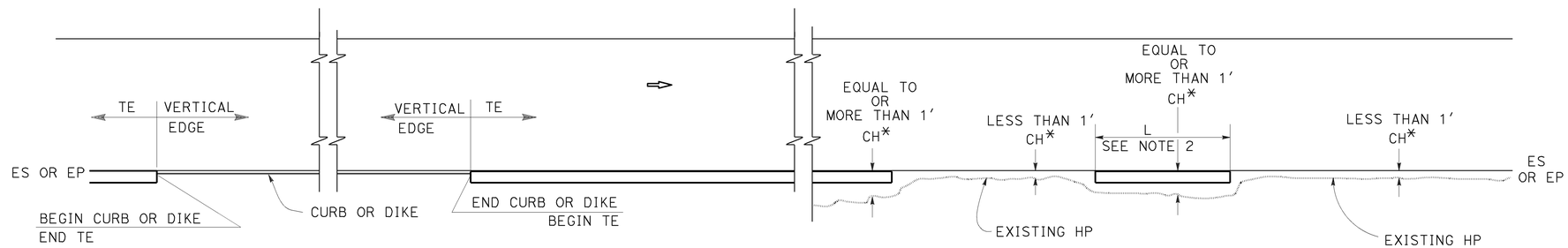

CURB OR DIKE

NARROW SIDE SLOPE

* CH = Distance from ES or EP to existing HP.

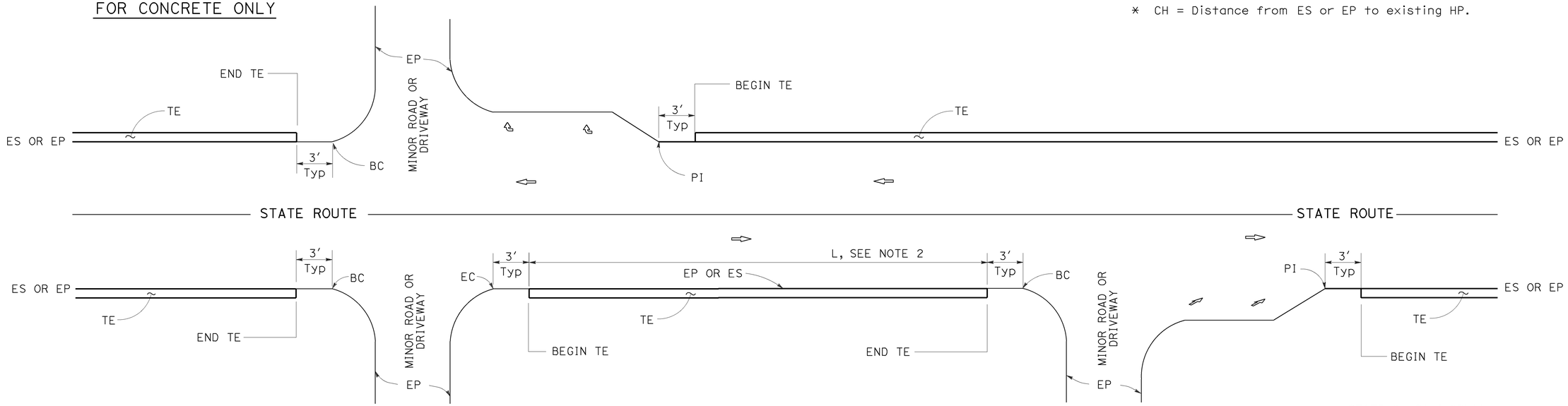

INTERTECTION

DRIVEWAY AND INTERSECTION

MINOR ROADWAY OR DRIVEWAY

STATE OF CALIFORNIA
DEPARTMENT OF TRANSPORTATION

PAVEMENT EDGE TREATMENTS

NO SCALE

NOTES:

1. For details not shown, see Revised Standard Plans RSP P75 and RSP P76.
2. Tapered edge is optional when L is less than 30′.

RSP P74 DATED OCTOBER 30, 2015 SUPERSEDES RSP P74 DATED NOVEMBER 15, 2013 AND RSP P74 DATED JANUARY 20, 2012 THAT SUPPLEMENTS THE STANDARD PLANS BOOK DATED 2010.

REVISED STANDARD PLAN RSP P74

2010 REVISED STANDARD PLAN RSP P74

10-13-15

Dist	COUNTY	ROUTE	POST MILES TOTAL PROJECT	SHEET No.	TOTAL SHEETS
03	Yol	16	23.2/23.5	46	52

Srikanth Balasubramanian
REGISTERED CIVIL ENGINEER

October 30, 2015
PLANS APPROVAL DATE

REGISTERED PROFESSIONAL ENGINEER Srikanth N. Balasubramanian No. C56426 Exp. 6-30-17 CIVIL STATE OF CALIFORNIA

THE STATE OF CALIFORNIA OR ITS OFFICERS OR AGENTS SHALL NOT BE RESPONSIBLE FOR THE ACCURACY OR COMPLETENESS OF SCANNED COPIES OF THIS PLAN SHEET.

TO ACCOMPANY PLANS DATED 1-11-16

LEGEND:

- HMA PAVEMENT
- HMA OR CONCRETE PAVEMENT
- CONCRETE PAVEMENT

ABBREVIATIONS:

TE TAPERED EDGE
TT TOTAL THICKNESS OF TE
HW HINGE WIDTH, DISTANCE FROM ES OR EP TO HP

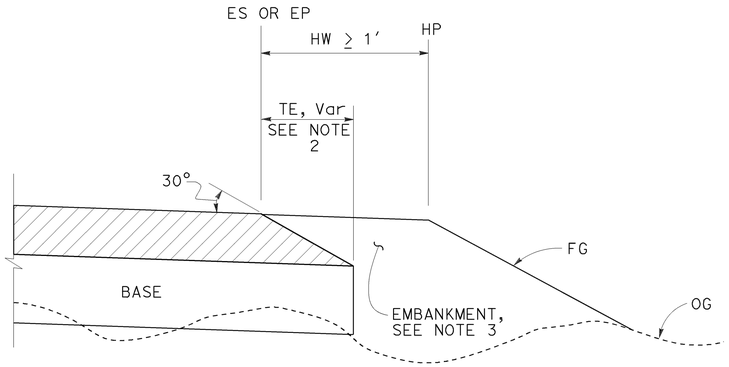

CASE K
Tapered Edge - Fill Section, HW ≥ 1′

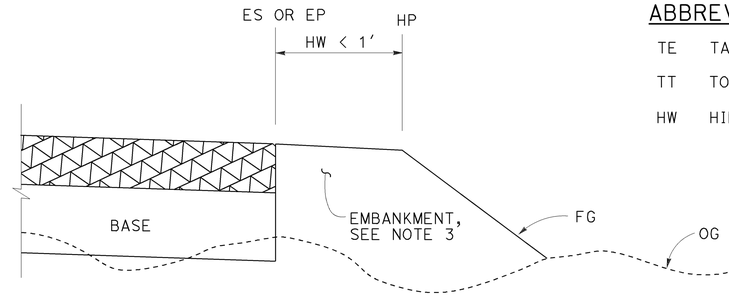

CASE L
Vertical Edge - Fill Section, HW < 1′

FILL SECTION

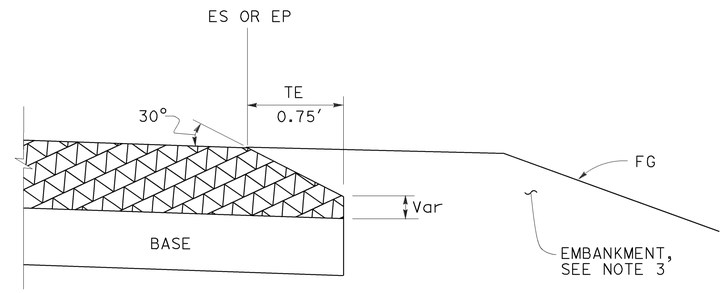

DETAIL "B"
For HMA pavement thickness more than 0.43′ or concrete pavement

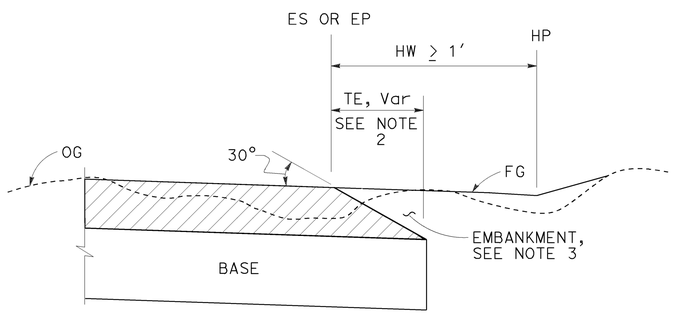

CASE M
Tapered Edge - Cut Section, HW ≥ 1′

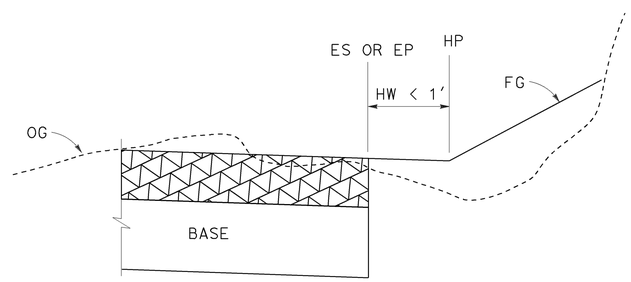

CASE N
Vertical Edge - Cut Section, HW < 1′

CUT SECTION

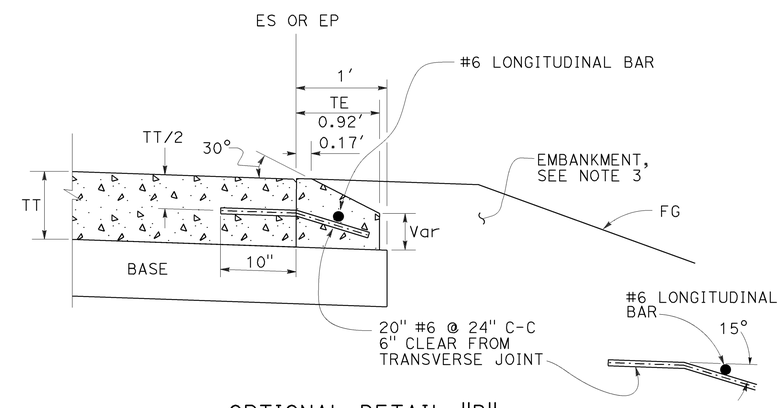

OPTIONAL DETAIL "B"
For concrete pavement
See Note 4

NOTES:

1. For limits of tapered edge and vertical edge treatments, see Revised Standard Plan RSP P74
2. Details shown for HMA pavement thickness less than 0.43′. See Detail "B" for HMA pavement thickness more than 0.43′ or concrete pavement.
3. For locations and limits of embankment see project plans.
4. Tapered edge transverse joint must match pavement transverse joint. End of #6 longitudinal bar must be 2" ±½" clear from transverse joint.
5. Tapered edge is not needed in the area of MGS, barrier, right turn lane and acceleration lane. See Revised Standard Plan RSP P74.

STATE OF CALIFORNIA
DEPARTMENT OF TRANSPORTATION

PAVEMENT EDGE TREATMENTS-NEW CONSTRUCTION

NO SCALE

RSP P76 DATED OCTOBER 30, 2015 SUPERSEDES RSP P76 DATED NOVEMBER 15, 2013 AND RSP P76 DATED JANUARY 20, 2012 THAT SUPPLEMENTS THE STANDARD PLANS BOOK DATED 2010.

REVISED STANDARD PLAN RSP P76

2010 REVISED STANDARD PLAN RSP P76

7-2-15

Dist	COUNTY	ROUTE	POST MILES TOTAL PROJECT	SHEET No.	TOTAL SHEETS
03	Yol	16	23.2/23.5	47	52

Gregory A. Balzer
LICENSED LANDSCAPE ARCHITECT

July 19, 2013
PLANS APPROVAL DATE

THE STATE OF CALIFORNIA OR ITS OFFICERS OR AGENTS SHALL NOT BE RESPONSIBLE FOR THE ACCURACY OR COMPLETENESS OF SCANNED COPIES OF THIS PLAN SHEET.

LICENSED LANDSCAPE ARCHITECT — Gregory A. Balzer 2576 — 02-28-15 Renewal Date — 7-19-13 Date — STATE OF CALIFORNIA

TO ACCOMPANY PLANS DATED 1-11-16

A

AB	AGGREGATE BASE
ABS	ACRYLONITRILE-BUTADIENE-STYRENE
AC	ASPHALT CONCRETE
ACC	ARMOR-CLAD CONDUCTORS
Adj	ADJACENT/ADJUSTABLE
AIC	AUXILIARY IRRIGATION CONTROLLER
Alt	ALTERNATIVE
AMEND	AMENDMENT
ARV	AIR RELEASE VALVE
AUTO	AUTOMATIC
AUX	AUXILIARY
AVB	ATMOSPHERIC VACUUM BREAKER

B

B&B	BALLED AND BURLAPPED
B/B	BRASS/BRONZE
B/B/PL	BRASS/BRONZE/PLASTIC
B/PL	BRASS/PLASTIC
BFM	BONDED FIBER MATRIX
Bit Ctd	BITUMINOUS COATED
BP	BOOSTER PUMP
BPA	BACKFLOW PREVENTER ASSEMBLY
BPE	BACKFLOW PREVENTER ENCLOSURE
BV	BALL VALVE

C

C	CONDUIT
CAP	CORRUGATED ALUMINUM PIPE
CARV	COMBINATION AIR RELEASE VALVE
CB	COUPLING BAND
CCA	CAM COUPLER ASSEMBLY
CEC	CONTROLLER ENCLOSURE CABINET
CHDPE	CORRUGATED HIGH DENSITY POLYETHYLENE
CL	CHAIN LINK
CNC	CONTROL AND NEUTRAL CONDUCTORS
Conc	CONCRETE
CP	COPPER PIPE
CS	COMPOST SOCK
CSP	CORRUGATED STEEL PIPE
CST	CENTER STRIP
CV	CHECK VALVE

D

Dia	DIAMETER
DIP	DUCTILE IRON PIPE
DIT	DRIP IRRIGATION TUBING
DG	DECOMPOSED GRANITE
DN	DIAMETER NOMINAL
DVA	DRIP VALVE ASSEMBLY

E

EC	EROSION CONTROL
ECTC	EROSION CONTROL TECHNOLOGY COUNCIL
Elect	ELECTRIC/ELECTRICAL
Elev	ELEVATION
ELL	ELBOW
ENCL	ENCLOSURE
EP	EDGE OF PAVEMENT
ES	EDGE OF SHOULDER
EST	END STRIP
ESTB	ESTABLISHMENT
ETW	EDGE OF TRAVELED WAY

F

F	FULL CIRCLE
F/P	FULL/PART CIRCLE
FCV	FLOW CONTROL VALVE
FERT	FERTILIZER
FG	FINISHED GRADE
FH	FLEXIBLE HOSE
FIPT	FEMALE IRON PIPE THREAD
FIS	FERTILIZER INJECTOR SYSTEM
FL	FLOW LINE
FR	FIBER ROLL
FS	FLOW SENSOR
FSC	FLOW SENSOR CABLE
FV	FLUSH VALVE

G

Galv	GALVANIZED
GARV	GARDEN VALVE
GARVA	GARDEN VALVE ASSEMBLY
GM	GRAVEL MULCH
GPH	GALLONS PER HOUR
GPM	GALLONS PER MINUTE
GSP	GALVANIZED STEEL PIPE
GV	GATE VALVE

H

H	HALF CIRCLE
HDPE	HIGH DENSITY POLYETHYLENE
HP	HORSEPOWER/HINGE POINT
HPL	HIGH PRESSURE LINE
Hwy	HIGHWAY

I

IC	IRRIGATION CONTROLLER
ICC	IRRIGATION CONTROLLER(S) IN CONTROLLER ENCLOSURE CABINET
ID	INSIDE DIAMETER
IFS	IRRIGATION FILTRATION SYSTEM
IPS	IRON PIPE SIZE
IPT	IRON PIPE THREAD
Irr	IRRIGATION

L

L	LENGTH

M

Max	MAXIMUM
MBGR	METAL BEAM GUARD RAILING
MCV	MANUAL CONTROL VALVE
MIC	MASTER IRRIGATION CONTROLLER
Min	MINIMUM
MIPT	MALE IRON PIPE THREAD
Misc	MISCELLANEOUS
Mtl	MATERIAL
MVP	MAINTENANCE VEHICLE PULLOUT

N

NCN	NO COMMON NAME
NL	NOZZLE LINE
No.	NUMBER
NPT	NATIONAL PIPE THREAD

O

O/C	ON CENTER
OD	OUTSIDE DIAMETER
OL	OVERLAP

P

P	PART CIRCLE
PB	PULL BOX
PCC	PORTLAND CEMENT CONCRETE
PE	POLYETHYLENE
Pkt	PACKET
PL	PLASTIC
PLS	PURE LIVE SEED
PLT	PLANT/PLANTING
PLT ESTB	PLANT ESTABLISHMENT
PM	POST MILE
PR	PRESSURE RATED
PRLV	PRESSURE RELIEF VALVE
PRV	PRESSURE REGULATING VALVE
PVC	POLYVINYL CHLORIDE
Pvmt	PAVEMENT

Q

Q	QUARTER CIRCLE
QCV	QUICK COUPLING VALVE

R

R	RADIUS
RCP	REINFORCED CONCRETE PIPE
RCV	REMOTE CONTROL VALVE
RCVM	REMOTE CONTROL VALVE (MASTER)
RCVMF	REMOTE CONTROL VALVE (MASTER) W/FLOW SENSOR
RCVP	REMOTE CONTROL VALVE W/PRESSURE REGULATOR
RCW	RECYCLED WATER
RECP	ROLLED EROSION CONTROL PRODUCT
REQ	REQUIRED
RICS	REMOTE IRRIGATION CONTROL SYSTEM
R/W	RIGHT OF WAY

S

S	SLIP
SCH	SCHEDULE
SF	STATE-FURNISHED
Shld	SHOULDER
Sq	SQUARE
SST	SIDE STRIP
Sta	STATION
Std	STANDARD
SW	SIDEWALK/SOUND WALL

T

T	THIRD CIRCLE/THREAD
TLS	TRUCK LOADING STANDPIPE
TQ	THREE QUARTER CIRCLE
TRM	TURF REINFORCEMENT MAT
TT	TWO-THIRDS CIRCLE
TWSA	TREE WELL SPRINKLER ASSEMBLY
Typ	TYPICAL

U

UG	UNDERGROUND

W

W	WIDTH
W/	WITH
WM	WATER METER
WS	WYE STRAINER
WSA	WYE STRAINER ASSEMBLY
WSP	WELDED STEEL PIPE
WWM	WELDED WIRE MESH

NOTE:

For additional abbreviations, see Standard Plans A10A and A10B.

STATE OF CALIFORNIA
DEPARTMENT OF TRANSPORTATION

LANDSCAPE AND EROSION CONTROL ABBREVIATIONS

NO SCALE

RSP H1 DATED JULY 19, 2013 SUPERSEDES STANDARD PLAN H1 DATED MAY 20, 2011 - PAGE 218 OF THE STANDARD PLANS BOOK DATED 2010.

REVISED STANDARD PLAN RSP H1

2010 REVISED STANDARD PLAN RSP H1

Dist	COUNTY	ROUTE	POST MILES TOTAL PROJECT	SHEET No.	TOTAL SHEETS
03	Yol	16	23.2/23.5	48	52

Gregory A. Balzer
LICENSED LANDSCAPE ARCHITECT

November 15, 2013
PLANS APPROVAL DATE

Gregory A. Balzer 2576 LICENSED LANDSCAPE ARCHITECT STATE OF CALIFORNIA
02-28-15 (Expires) Date
11-15-13 Date

THE STATE OF CALIFORNIA OR ITS OFFICERS OR AGENTS SHALL NOT BE RESPONSIBLE FOR THE ACCURACY OR COMPLETENESS OF SCANNED COPIES OF THIS PLAN SHEET.

TO ACCOMPANY PLANS DATED 1-11-16

2010 REVISED STANDARD PLAN RSP H2

EXISTING	NEW	ITEM DESCRIPTION
		WATER METER (WM)
		BACKFLOW PREVENTER ASSEMBLY (BPA)
		BACKFLOW PREVENTER ENCLOSURE (BPE)
		BOOSTER PUMP (BP)
		TRUCK LOADING STANDPIPE (TLS)
	FS	FLOW SENSOR (FS)
		MASTER IRRIGATION CONTROLLER (MIC)
		AUXILIARY IRRIGATION CONTROLLER (AIC)
		IRRIGATION CONTROLLER (IC) IRRIGATION CONTROLLER (IC) (BATTERY) IRRIGATION CONTROLLER (IC) (SOLAR) IRRIGATION CONTROLLER (IC) (TWO WIRE) IRRIGATION CONTROLLER(S) IN CONTROLLER ENCLOSURE CABINET (ICC)
acc	ACC	ARMOR-CLAD CONDUCTORS (ACC)
cnc	CNC	CONTROL AND NEUTRAL CONDUCTORS (CNC)
		IRRIGATION CONDUIT
		EXTEND IRRIGATION CONDUIT
dip	DIP	DUCTILE IRON PIPE (SUPPLY LINE) (MAIN) (DIP)
		GALVANIZED STEEL PIPE (SUPPLY LINE) (MAIN) (GSP)
		GALVANIZED STEEL PIPE (SUPPLY LINE) (LATERAL) (GSP)
		PLASTIC PIPE (SUPPLY LINE) (MAIN)
		PLASTIC PIPE (SUPPLY LINE) (LATERAL)
cp	CP	COPPER PIPE (SUPPLY LINE)
dit	DIT	DRIP IRRIGATION TUBING
		REMOTE CONTROL VALVE (RCV) REMOTE CONTROL VALVE (MASTER) (RCVM) REMOTE CONTROL VALVE (MASTER) W/FLOW METER (RCVMF)
P	P	REMOTE CONTROL VALVE W/PRESSURE REGULATOR (RCVP)
		EXISTING MANUAL CONTROL VALVE (MCV)
V	V	DRIP VALVE ASSEMBLY (DVA)
Y	Y	WYE STRAINER ASSEMBLY (WSA)

EXISTING	NEW	ITEM DESCRIPTION
		GATE VALVE (GV)
		BALL VALVE (BV)
		QUICK COUPLING VALVE (QCV)
		CAM COUPLER ASSEMBLY (CCA)
		GARDEN VALVE ASSEMBLY (GARVA)
		PRESSURE REGULATING VALVE (PRV)
		PRESSURE RELIEF VALVE (PRLV)
		FLOW CONTROL VALVE (FCV)
		COMBINATION AIR RELEASE VALVE (CARV)
		CHECK VALVE (CV)
		FLUSH VALVE (FV)
		EXISTING NOZZLE LINE W/TURNING UNION
		EXISTING IRRIGATION SYSTEM
		EXISTING IRRIGATION SYSTEM TO BE REMOVED
		CHAIN LINK GATE
		QUICK COUPLING VALVE W/SPRINKLER PROTECTOR
3	3	SPRINKLER W/SPRINKLER PROTECTOR
	C	CONNECT TO EXISTING SYSTEM
		CAP
		CAP EXISTING
	FR	FIBER ROLL
	CS	COMPOST SOCK

RCV SIZE
IRRIGATION CONTROLLER
CONTROLLER STATION
VALVE IN PARALLEL (IF APPLICABLE)
GPM
QUANTITY OF SPRINKLERS (WHEN SHOWN)

* 2½"-A-2b-40-60

VALVE CODE

* VALVE CODES FOR EXISTING VALVES ARE SHOWN IN A DASHED ENCLOSURE.

STATE OF CALIFORNIA
DEPARTMENT OF TRANSPORTATION

LANDSCAPE AND EROSION CONTROL SYMBOLS

NO SCALE

RSP H2 DATED NOVEMBER 15, 2013 SUPERSEDES RSP H2 DATED JULY 19, 2013 AND STANDARD PLAN H2 DATED MAY 20, 2011 - PAGE 219 OF THE STANDARD PLANS BOOK DATED 2010.

REVISED STANDARD PLAN RSP H2

10-9-13

Dist	COUNTY	ROUTE	POST MILES TOTAL PROJECT	SHEET No.	TOTAL SHEETS
03	Yol	16	23.2/23.5	49	52

REGISTERED CIVIL ENGINEER

July 19, 2013
PLANS APPROVAL DATE

REGISTERED PROFESSIONAL ENGINEER
Gurinderpal Bhullar
No. C48815
Exp. 9-30-14
CIVIL
STATE OF CALIFORNIA

THE STATE OF CALIFORNIA OR ITS OFFICERS OR AGENTS SHALL NOT BE RESPONSIBLE FOR THE ACCURACY OR COMPLETENESS OF SCANNED COPIES OF THIS PLAN SHEET.

TO ACCOMPANY PLANS DATED 1-11-16

2010 REVISED STANDARD PLAN RSP T9

TABLE 1

TAPER LENGTH CRITERIA AND CHANNELIZING DEVICE SPACING

SPEED (S)	MINIMUM TAPER LENGTH * FOR WIDTH OF OFFSET 12 FEET (W)				MAXIMUM CHANNELIZING DEVICE SPACING		
					X	Y	Z **
	TANGENT 2L	MERGING L	SHIFTING L/2	SHOULDER L/3	TAPER	TANGENT	CONFLICT
mph	ft	ft	ft	ft	ft	ft	ft
20	160	80	40	27	20	40	10
25	250	125	63	42	25	50	12
30	360	180	90	60	30	60	15
35	490	245	123	82	35	70	17
40	640	320	160	107	40	80	20
45	1080	540	270	180	45	90	22
50	1200	600	300	200	50	100	25
55	1320	660	330	220	55	110	27
60	1440	720	360	240	60	120	30
65	1560	780	390	260	65	130	32
70	1680	840	420	280	70	140	35

* - For other offsets, use the following merging taper length formula for L:
For speed of 40 mph or less, $L = WS^2/60$
For speed of 45 mph or more, $L = WS$

Where: L = Taper length in feet
W = Width of offset in feet
S = Posted speed limit, off-peak 85th-percentile speed prior to work starting, or the anticipated operating speed in mph

** - Use for taper and tangent sections where there are no pavement markings or where there is a conflict between existing pavement markings and channelizers (CA).

TABLE 2

LONGITUDINAL BUFFER SPACE AND FLAGGER STATION SPACING

SPEED *	Min D **	DOWNGRADE Min D ***		
		-3%	-6%	-9%
mph	ft	ft	ft	ft
20	115	116	120	126
25	155	158	165	173
30	200	205	215	227
35	250	257	271	287
40	305	315	333	354
45	360	378	400	427
50	425	446	474	507
55	495	520	553	593
60	570	598	638	686
65	645	682	728	785
70	730	771	825	891

* - Speed is posted speed limit, off-peak 85th-percentile speed prior to work starting, or the anticipated operating speed in mph

** - Longitudinal buffer space or flagger station spacing

*** - Use on sustained downgrade steeper than -3 percent and longer than 1 mile.

TABLE 3

ADVANCE WARNING SIGN SPACING

ROAD TYPE	DISTANCE BETWEEN SIGNS *		
	A	B	C
	ft	ft	ft
URBAN - 25 mph OR LESS	100	100	100
URBAN - MORE THAN 25 mph TO 40 mph	250	250	250
URBAN - MORE THAN 40 mph	350	350	350
RURAL	500	500	500
EXPRESSWAY / FREEWAY	1000	1500	2640

* - The distances are approximate, are intended for guidance purposes only, and should be applied with engineering judgment. These distances should be adjusted by the Engineer for field conditions, if necessary, by increasing or decreasing the recommmended distances.

STATE OF CALIFORNIA
DEPARTMENT OF TRANSPORTATION

TRAFFIC CONTROL SYSTEM TABLES FOR LANE AND RAMP CLOSURES

NO SCALE

RSP T9 DATED JULY 19, 2013 SUPERSEDES RSP T9 DATED APRIL 19, 2013 THAT SUPPLEMENTS THE STANDARD PLANS BOOK DATED 2010.

REVISED STANDARD PLAN RSP T9

Dist	COUNTY	ROUTE	POST MILES TOTAL PROJECT	SHEET No.	TOTAL SHEETS
03	Yol	16	23.2/23.5	50	52

Devinder Singh
REGISTERED CIVIL ENGINEER

October 30, 2015
PLANS APPROVAL DATE

REGISTERED PROFESSIONAL ENGINEER
Devinder Singh
No. C50470
Exp. 6-30-17
CIVIL
STATE OF CALIFORNIA

THE STATE OF CALIFORNIA OR ITS OFFICERS OR AGENTS SHALL NOT BE RESPONSIBLE FOR THE ACCURACY OR COMPLETENESS OF SCANNED COPIES OF THIS PLAN SHEET.

TO ACCOMPANY PLANS DATED 1-11-16

2010 REVISED STANDARD PLAN RSP T13

NOTES:

See Revised Standard Plan RSP T9 for tables.

Use cone spacing X for taper segment, Y for tangent segment or Z for conflict situations, as approriate, per Table 1, unless X, Y, or Z cone spacing is shown on this sheet.

Unless otherwise specified in the special provisions, all temporary warning signs shall have black legend on fluorescent orange background.

California codes are designated by (CA). Otherwise, Federal (MUTCD) codes are shown.

TYPICAL LANE CLOSURE WITH REVERSIBLE CONTROL

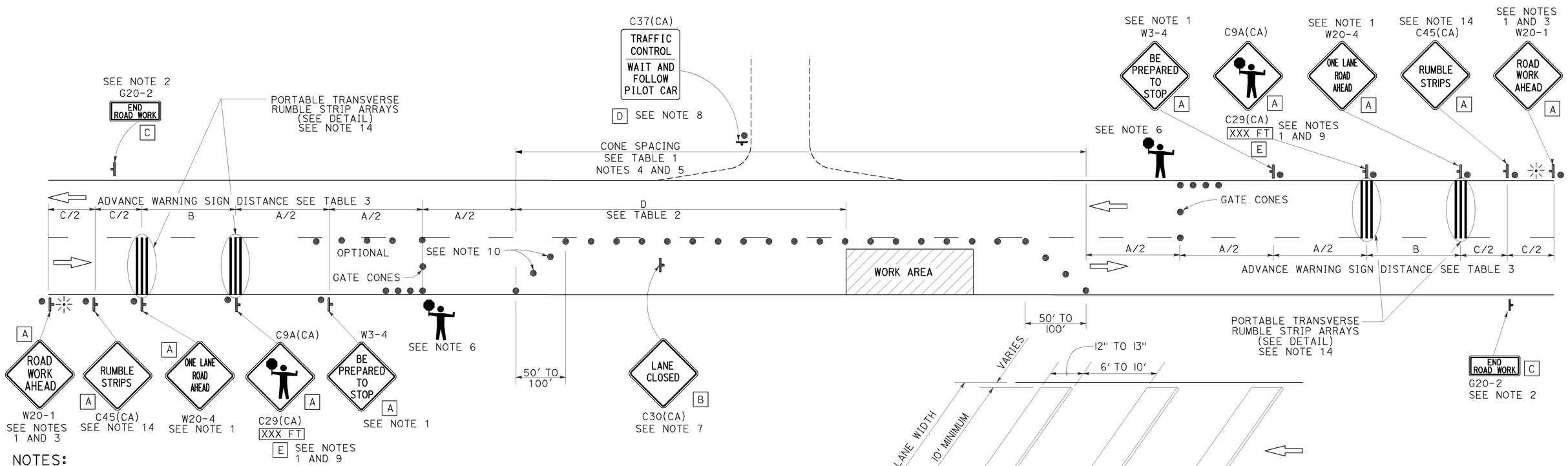

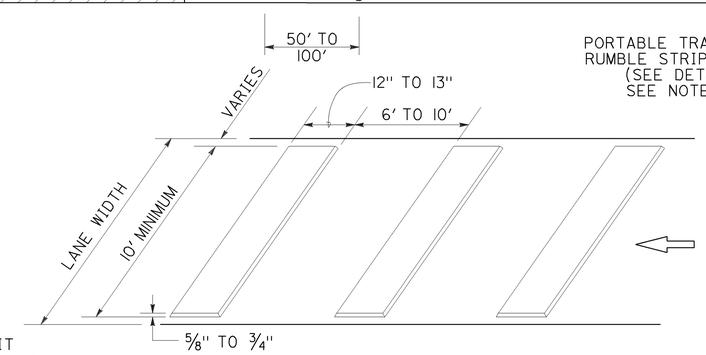

PORTABLE TRANSVERSE RUMBLE STRIP ARRAY DETAIL

NOTES:

1. Each advance warning sign in each direction of travel shall be equipped with at least two flags for daytime closure. Each flag shall be at least 16" x 16" in size and shall be orange or fluorescent red-orange in color. Flashing beacons shall be placed at the locations indicated for lane closure during hours of darkness.
2. A G20-2 "END ROAD WORK" sign, as appropriate, shall be placed at the end of the lane control unless the end of work area is obvious, or ends within a larger project's limits.
3. If the W20-1 sign would follow within 2000' of a stationary W20-1 or G20-1 "ROAD WORK NEXT _____ MILES", use a W20-4 sign for the first advance warning sign.
4. All cones used for lane closures during the hours of darkness shall be fitted with retroreflective bands (or sleeves) as specified in the specifications.
5. Portable delineators, placed at one-half the spacing indicated for traffic cones, may be used instead of cones for daytime closures only.
6. Additional advance flaggers may be required. Flagger should stand in a conspicuous place, be visible to approaching traffic as well as approaching vehicles after the first vehicle has stopped. During the hours of darkness, the flagging-station and flagger shall be illuminated and clearly visible to approaching traffic. The illumination footprint of the lighting on the ground shall be at least 20' in diameter. Place a minimum of four cones at 50' intervals in advance of flagger station as shown.
7. Place C30(CA) "LANE CLOSED" sign at 500' to 1000' intervals throughout extended work areas. They are optional if the work area is visible from the flagger station.
8. When a pilot car is used, place a C37(CA) "TRAFFIC CONTROL-WAIT AND FOLLOW PILOT CAR" sign with black legend on white background at all intersections, driveways and alleys without a flagger within traffic control area. Signs shall be clean and visible at all times. Where traffic can not be effectively self-regulated, at least one flagger shall be used at each intersection within traffic control area.
9. An optional C29(CA) sign may be placed below the C9A(CA) sign.
10. Either traffic cones or barricades shall be placed on the taper. Barricades shall be Type I, II, or III.
11. The color of the portable transverse rumble strips shall be black or orange. Use 2 arrays, each array shall consist of 3 rumble strips.
12. Portable transverse rumble strips shall not be placed on sharp horizontal or vertical curves nor shall they be placed through pedestrian crossings.
13. If the portable transverse rumble strips become out of alignment (skewed) by more than 6 inches, measured from one end to the other, they shall be readjusted to bring the placement back to the original location.
14. Portable transverse rumble strips are not required if any one of the following conditions is satisfied:
    A. Work duration occupies a location for four hours or less
    B. Posted speed limit is below 45 MPH
    C. Work is of emergency nature
    D. Work zone is in snow or icy weather conditions

SIGN PANEL SIZE (Min)

A	48" x 48"
B	30" x 30"
C	36" x 18"
D	36" x 42"
E	20" x 7"

LEGEND

- TRAFFIC CONE
- TEMPORARY TRAFFIC CONTROL SIGN
- PORTABLE FLASHING BEACON
- FLAGGER

STATE OF CALIFORNIA
DEPARTMENT OF TRANSPORTATION

TRAFFIC CONTROL SYSTEM FOR LANE CLOSURE ON TWO LANE CONVENTIONAL HIGHWAYS

NO SCALE

RSP T13 DATED OCTOBER 30, 2015 SUPERSEDES RSP T13 DATED OCTOBER 17, 2014, RSP T13 DATED JULY 18, 2014 AND RSP T13 DATED APRIL 19, 2013 AND STANDARD PLAN T13 DATED MAY 20, 2011 - PAGE 241 OF THE STANDARD PLANS BOOK DATED 2010.

REVISED STANDARD PLAN RSP T13

10-13-15

Dist	COUNTY	ROUTE	POST MILES TOTAL PROJECT	SHEET No.	TOTAL SHEETS
03	Yol	16	23.2/23.5	51	52

REGISTERED CIVIL ENGINEER

April 19, 2013
PLANS APPROVAL DATE

REGISTERED PROFESSIONAL ENGINEER
Gurinderpal Bhullar
No. C48815
Exp. 9-30-14
CIVIL
STATE OF CALIFORNIA

THE STATE OF CALIFORNIA OR ITS OFFICERS OR AGENTS SHALL NOT BE RESPONSIBLE FOR THE ACCURACY OR COMPLETENESS OF SCANNED COPIES OF THIS PLAN SHEET.

TO ACCOMPANY PLANS DATED 1-11-16

2010 REVISED STANDARD PLAN RSP T17

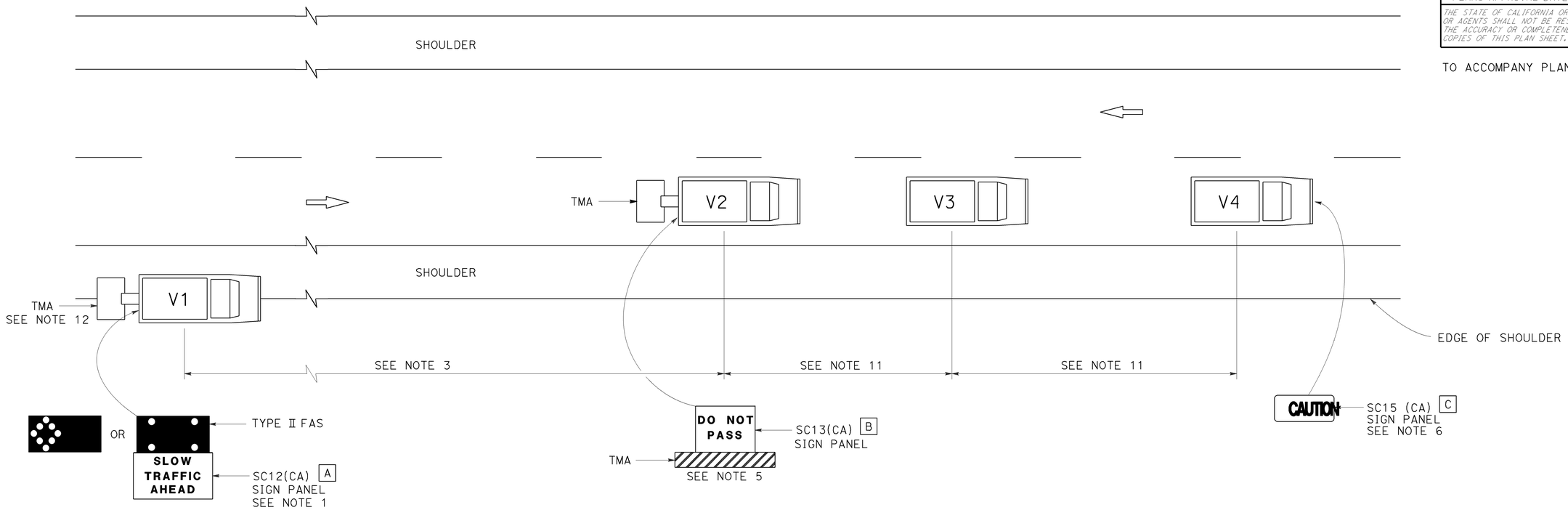

LEGEND

V1	SIGN VEHICLE
V2	SHADOW VEHICLE
V3	WORK/APPLICATION VEHICLE
V4	SIGN VEHICLE
TMA	TRUCK-MOUNTED ATTENUATOR
	FLASHING ARROW SIGN (FAS) IN FLASHING CAUTION MODE
	FLASHING ARROW SIGN (FAS) IN ALTERNATING DIAMOND CAUTION

SIGN PANEL SIZE (Min)

A	72" x 42"
B	54" x 42"
C	54" x 24"

NOTES:

1. Either a changeable message sign or a SC12(CA) "SLOW TRAFFIC AHEAD" sign shall be mounted on the rear of sign vehicle V1. The changeable message sign shall be sequenced to show the "CAUTION" message first, follow by the "SLOW TRAFFIC AHEAD" message. A Type II flashing arrow sign may be used with the SC12(CA) sign panel.
2. Sign vehicle V1 should be positioned where highly visible when shoulders are not available.
3. If traffic queues develop, sign vehicle V1 should be positioned upstream from the end of queue.
4. Vehicle-mounted sign panels shall have Type III or above retroreflective sheeting, black on white, or black on fluorescent orange, with 6" minimum series D letters per Caltrans sign specifications.
5. Shadow vehicle shall be equipped with a truck-mounted attenuator. The sign panel shown shall be mounted on the rear of shadow vehicle V2. The message "LANE CLOSED" may be used in place of the "DO NOT PASS" message.
6. The sign panel shown shall be mounted on the front of sign vehicle V4, facing opposing traffic.
7. All vehicles shall be equipped with flashing or rotating amber lights.
8. Sign vehicle V4 will not be required when the work and vehicles V2 and V3 are 2′ or more from the centerline of the highway during the work or application operations.
9. All vehicles used for lane closures shall be equipped with two-way radios and the vehicle operators shall maintain communication during the work or application operation.
10. This plan shall not be used where workers would be on foot in the work area. Use a stationary type lane closure (Revised Standard Plan T13) for this condition.
11. Minimize spacing between vehicles V2 and V3 and vehicles V3 and V4 to deter road users from driving in between them.
12. If sign vehicle V1 encroaches into the traffic lane due to insufficient shoulder width, sign vehicle V1 shall be equipped with a truck-mounted attenuator. Sign vehicle V1 shall stay as close to the edge of shoulder as practicable.

STATE OF CALIFORNIA
DEPARTMENT OF TRANSPORTATION

TRAFFIC CONTROL SYSTEM FOR MOVING LANE CLOSURE ON TWO LANE HIGHWAYS

NO SCALE

RSP T17 DATED APRIL 19, 2013 SUPERSEDES STANDARD PLAN T17
DATED MAY 20, 2011 - PAGE 245 OF THE STANDARD PLANS BOOK DATED 2010.

REVISED STANDARD PLAN RSP T17

12-18-12

Dist	COUNTY	ROUTE	POST MILES TOTAL PROJECT	SHEET No.	TOTAL SHEETS
03	Yol	16	23.2/23.5	52	52

REGISTERED CIVIL ENGINEER

October 21, 2011
PLANS APPROVAL DATE

REGISTERED PROFESSIONAL ENGINEER Tillat Satter No. C42892 Exp. 3-31-12 CIVIL STATE OF CALIFORNIA

THE STATE OF CALIFORNIA OR ITS OFFICERS OR AGENTS SHALL NOT BE RESPONSIBLE FOR THE ACCURACY OR COMPLETENESS OF SCANNED COPIES OF THIS PLAN SHEET.

TO ACCOMPANY PLANS DATED 1-11-16

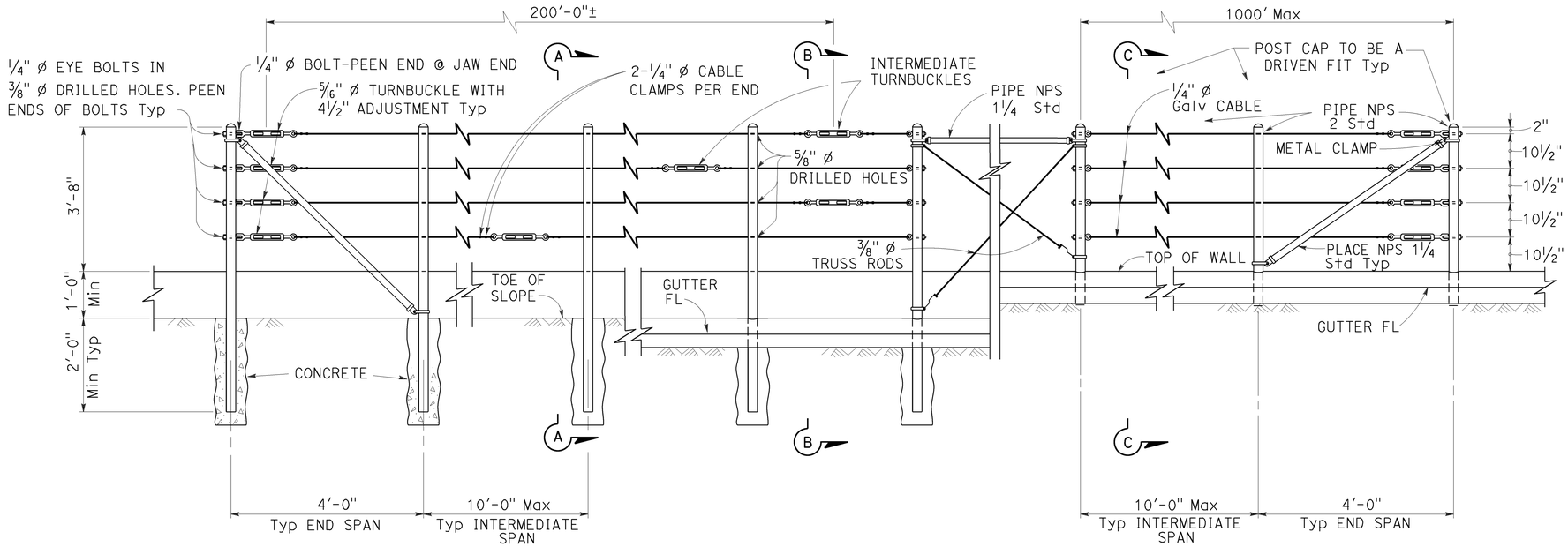

EXISTING WALL (WITHOUT GUTTER)
Existing

RETAINING WALL (WITH GUTTER)
Existing

RETAINING WALL (WITH GUTTER)
New construction

ELEVATION

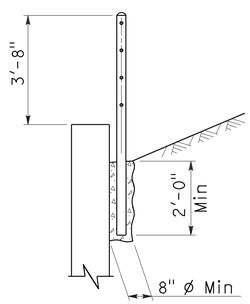

SECTION A-A
Existing

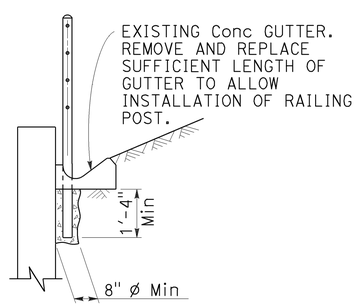

SECTION B-B
Existing

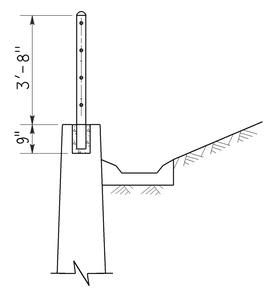

SECTION C-C
New construction

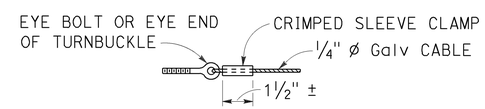

ALTERNATIVE CABLE CONNECTION

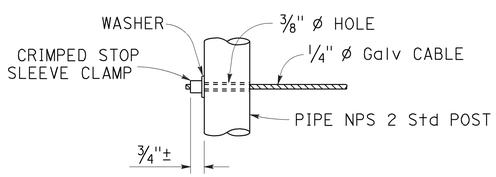

ALTERNATIVE DEAD END ANCHORAGE

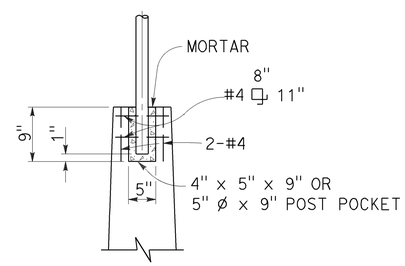

POST POCKET

NOTES:

1. Maximum distance between turnbuckles shall be 200'-0"±.
2. Intermediate turnbuckles to be placed in adjacent spans.
3. Cable shall not be spliced between intermediate turnbuckles and end posts.
4. Posts to be vertical.
5. Alignment of holes in posts may vary to conform to slope of top of retaining wall.
6. The Contractor shall verify all dependent dimensions in the field before ordering or fabricating any material.
7. Line posts shall be braced horizontally and trussed diagonally in both directions at intervals not to exceed 1000'.
8. Post pockets to be centered in top of wall.
9. Typical end spans, braced in both directions, shall be constructed at changes in line where the angle of deflection is 15° or more.
10. Provide thimbles at all cable loops.

STATE OF CALIFORNIA
DEPARTMENT OF TRANSPORTATION

CABLE RAILING

NO SCALE

RSP B11-47 DATED OCTOBER 21, 2011 SUPERSEDES STANDARD PLAN B11-47 DATED MAY 20, 2011 - PAGE 293 OF THE STANDARD PLANS BOOK DATED 2010.

REVISED STANDARD PLAN RSP B11-47

2010 REVISED STANDARD PLAN RSP B11-47

9-14-11