Dist	COUNTY	ROUTE	POST MILES TOTAL PROJECT	SHEET No.	TOTAL SHEETS
03	Sac	5	0.0/17.2	4	301

REGISTERED CIVIL ENGINEER 6-8-10 DATE

6-14-10
PLANS APPROVAL DATE

REGISTERED PROFESSIONAL ENGINEER RUPINDER DOSANJH No. C64852 Exp. 6-30-11 CIVIL STATE OF CALIFORNIA

THE STATE OF CALIFORNIA OR ITS OFFICERS OR AGENTS SHALL NOT BE RESPONSIBLE FOR THE ACCURACY OR COMPLETENESS OF SCANNED COPIES OF THIS PLAN SHEET.

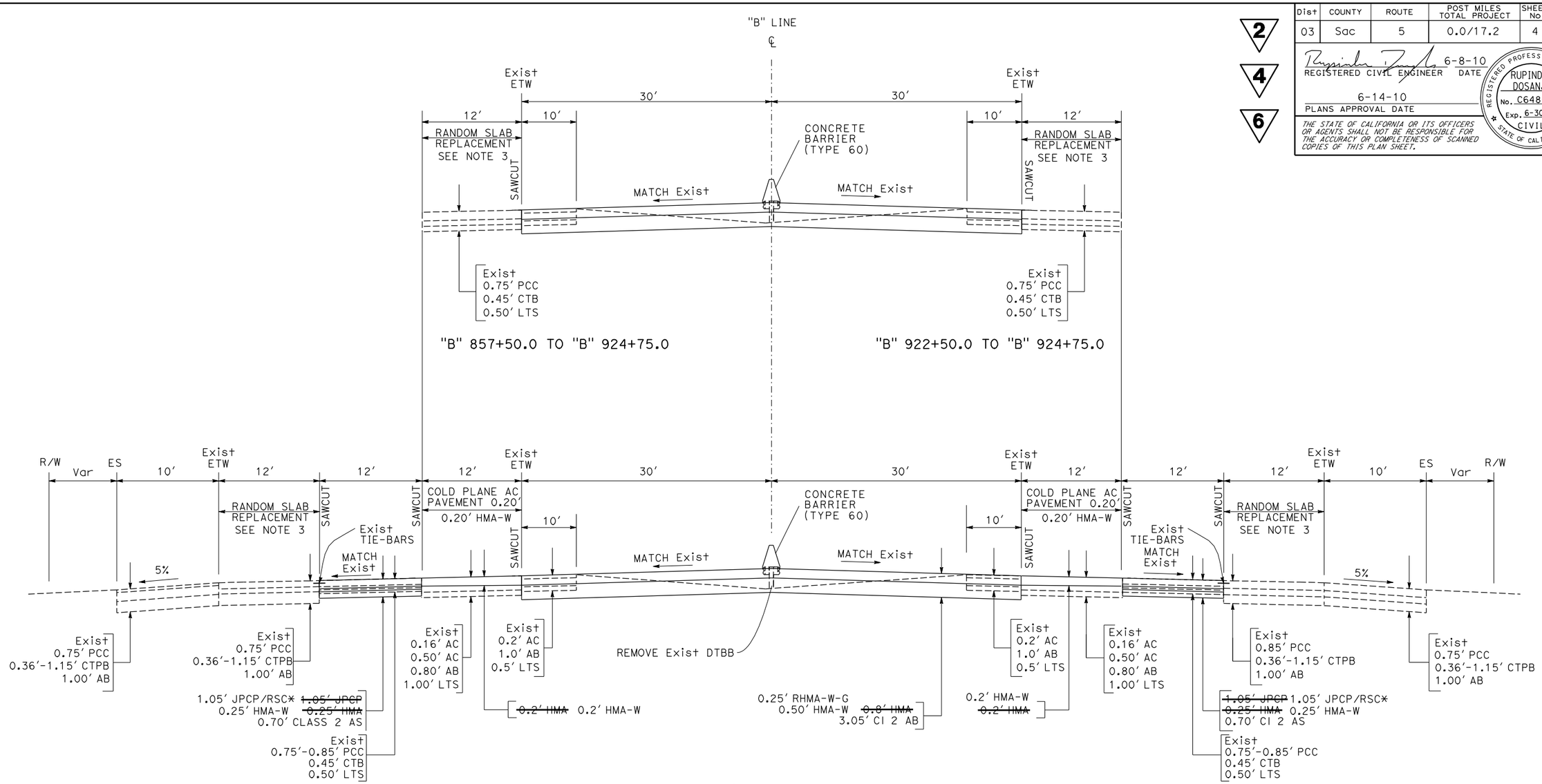

ROUTE 5

SEGMENT 3 - PM 13.0 to 15.7

~~"B" 792+00.0 TO "B" 924+00.0~~

SOUTHBOUND

~~"B" 792+00.0 TO "B" 857+50.0~~
"B" 916+00.0 TO "B" 924+38.4*
"B" 799+00.0 TO "B" 916+00.0
"B" 790+35.7 TO "B" 799+00.0*

NORTHBOUND

~~"B" 792+00.0 TO "B" 922+50.0~~
"B" 916+00.0 TO "B" 925+48.6*
"B" 799+00.0 TO "B" 916+00.0
"B" 790+90.7 TO "B" 799+00.0*

2 REVISED PER ADDENDUM No. 2 DATED NOVEMBER 9, 2010

4 REVISED PER ADDENDUM No. 4 DATED DECEMBER 14, 2010

6 REVISED PER ADDENDUM No. 6 DATED JANUARY 12, 2011

TYPICAL CROSS SECTIONS

NO SCALE

X-3

STATE OF CALIFORNIA - DEPARTMENT OF TRANSPORTATION
Caltrans
NORTH REGION
OFFICE OF DESIGN, SOUTH
DESIGN BRANCH S13

FUNCTIONAL SUPERVISOR: OSCAR VASQUEZ
CALCULATED-DESIGNED BY: R. S. DOSANJH
CHECKED BY: R. TOPHAM
REVISED BY
DATE REVISED

LAST REVISION 00-00-00
DATE PLOTTED => 11-JAN-2011
TIME PLOTTED => 14:07

Dist	COUNTY	ROUTE	POST MILES TOTAL PROJECT	SHEET No.	TOTAL SHEETS
03	Sac	5	0.0/17.2	29	301

2

REGISTERED CIVIL ENGINEER 6-8-10 DATE

6-14-10
PLANS APPROVAL DATE

REGISTERED PROFESSIONAL ENGINEER MOHAMMAD U. SADIQ No. 67047 Exp. 9-30-10 CIVIL STATE OF CALIFORNIA

THE STATE OF CALIFORNIA OR ITS OFFICERS OR AGENTS SHALL NOT BE RESPONSIBLE FOR THE ACCURACY OR COMPLETENESS OF SCANNED COPIES OF THIS PLAN SHEET.

LEGEND:

CONFORM GRIND

DIRECTION OF TRAFFIC

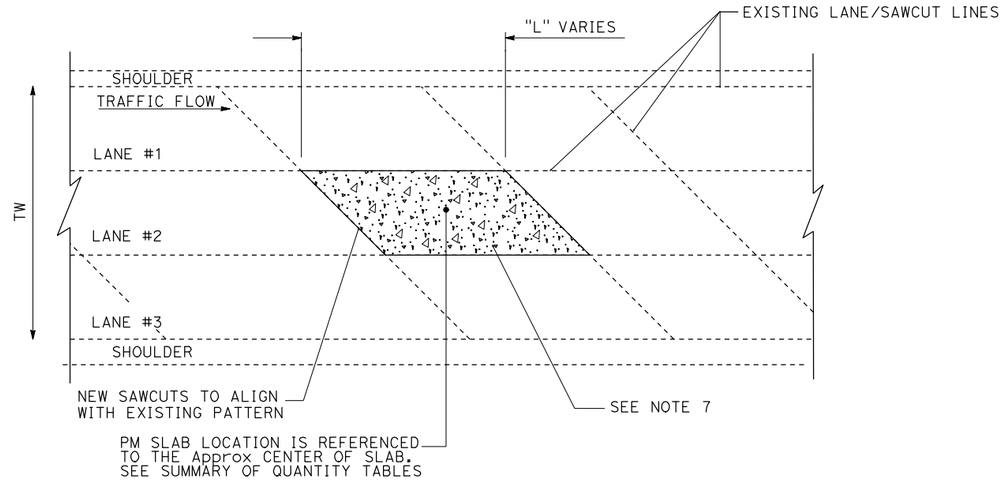

REPLACE CONCRETE PAVEMENT

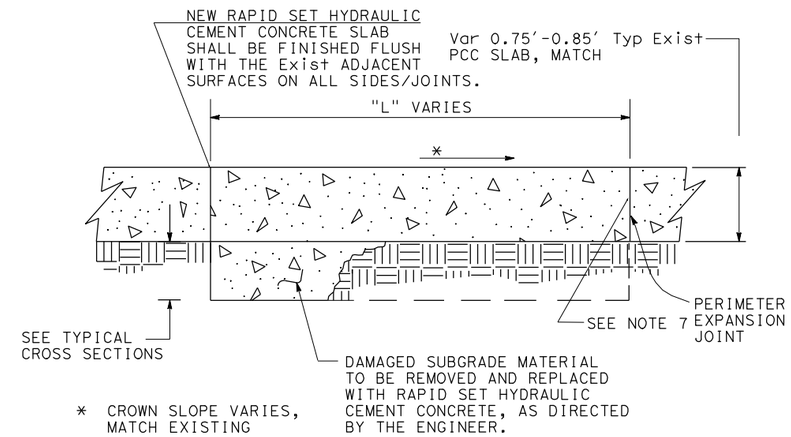

TYPICAL PCC SLAB REPLACEMENT DETAIL

RAPID SET HYDRAULIC CEMENT CONCRETE

~~4 MEADOWVIEW/POCKET ROAD OC~~
~~FLORIN ROAD OC~~

6

~~"B" 790+35.7 TO "B" 799+00.0~~
~~"B" 916+00.0 TO "B" 925+48.6~~

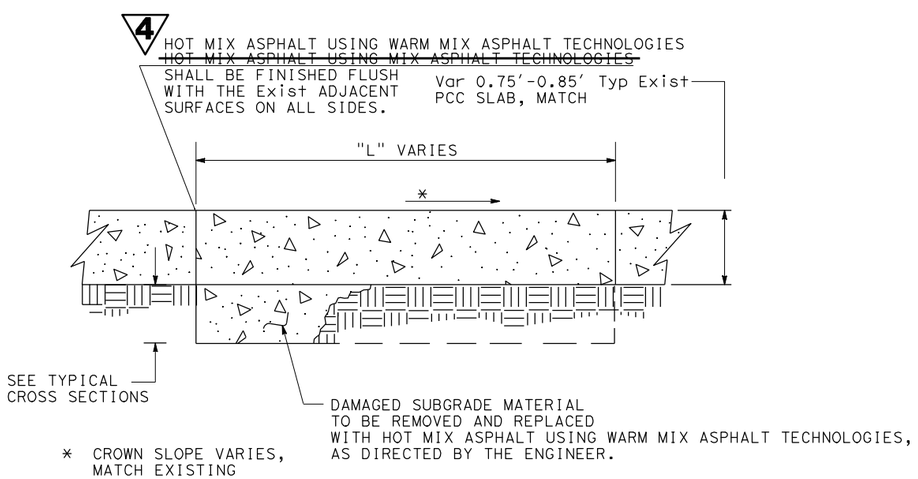

TYPICAL PCC SLAB REPLACEMENT DETAIL

HOT MIX ASPHALT USING WARM MIX ASPHALT TECHNOLOGIES

NOTES:

1. LANE NUMBERS INCREASE FROM LEFT TO RIGHT IN DIRECTION OF TRAVEL
2. L, REPLACEMENT SLAB LENGTH IN FEET
3. MATCH EXISTING PCC SLAB THICKNESS
4. DIMENSIONS OF THE STRUCTURAL SECTIONS ARE SUBJECT TO TOLERANCES SPECIFIED IN THE STANDARD SPECIFICATIONS
5. SUPERELEVATION AS SHOWN OR AS DIRECTED BY THE ENGINEER
6. THE OUTLINE OF THE CONCRETE SLAB TO BE REMOVED SHALL BE SAWCUT FULL DEPTH ALIGN WITH Exist SAWCUT PATTERN.
7. CONCRETE PAVEMENT SHALL BE REMOVED BY NON-IMPACT METHODS
8. A TYPICAL DIMENSION OF 16' X 12' X 1.3' WAS USED TO GENERATE RAPID STRENGTH CONCRETE QUANTITIES
9. EXACT SLAB LOCATION TO BE DETERMINED BY THE ENGINEER

2 REVISED PER ADDENDUM No. 2 DATED NOVEMBER 9, 2010

4 REVISED PER ADDENDUM No. 4 DATED DECEMBER 14, 2010

6 REVISED PER ADDENDUM No. 6 DATED JANUARY 12, 2011

CONSTRUCTION DETAILS

C-1

STATE OF CALIFORNIA - DEPARTMENT OF TRANSPORTATION
Caltrans
NORTH REGION
OFFICE OF DESIGN, SOUTH
DESIGN BRANCH S10

FUNCTIONAL SUPERVISOR: OSCAR VASQUEZ
CALCULATED-DESIGNED BY: M. SADIQ
CHECKED BY: M. SADIQ
REVISED BY
DATE REVISED

LAST REVISION 00-00-00
DATE PLOTTED => 11-JAN-2011
TIME PLOTTED => 14:07

Dist	COUNTY	ROUTE	POST MILES TOTAL PROJECT	SHEET No.	TOTAL SHEETS
03	Sac	5	0.0/17.2	30	301

4

Usman Sadiq 6-8-10
REGISTERED CIVIL ENGINEER DATE

6-14-10
PLANS APPROVAL DATE

REGISTERED PROFESSIONAL ENGINEER
MOHAMMAD U. SADIQ
No. 67047
Exp. 9-30-10
CIVIL
STATE OF CALIFORNIA

THE STATE OF CALIFORNIA OR ITS OFFICERS OR AGENTS SHALL NOT BE RESPONSIBLE FOR THE ACCURACY OR COMPLETENESS OF SCANNED COPIES OF THIS PLAN SHEET.

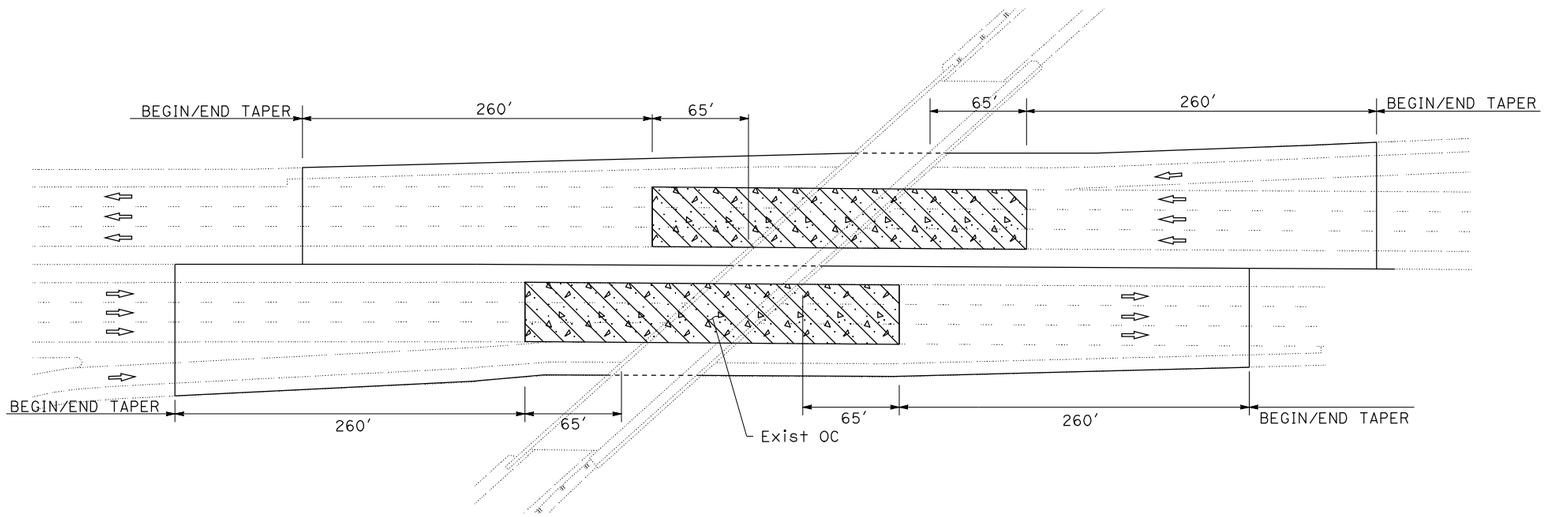

PLAN

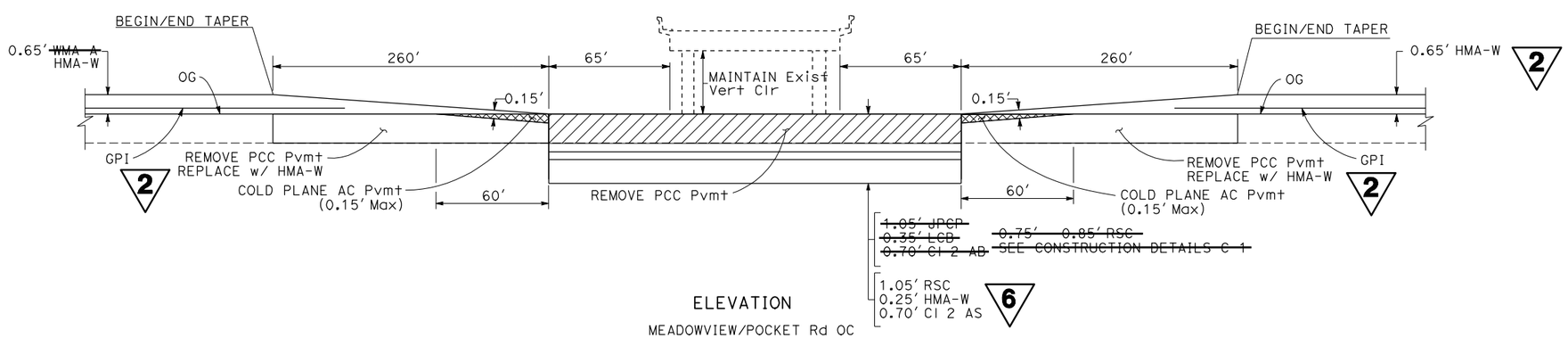

ELEVATION

MEADOWVIEW/POCKET Rd OC

OVERCROSSING PAVEMENT OVERLAY TAPER

2 **REVISED PER ADDENDUM No. 2 DATED NOVEMBER 9, 2010**

4 **REVISED PER ADDENDUM No. 4 DATED DECEMBER 14, 2010**

6 **REVISED PER ADDENDUM No. 6 DATED JANUARY 12, 2011**

CONSTRUCTION DETAILS

NO SCALE

C-2

STATE OF CALIFORNIA - DEPARTMENT OF TRANSPORTATION
Caltrans
NORTH REGION
OFFICE OF DESIGN, SOUTH
DESIGN BRANCH S10

FUNCTIONAL SUPERVISOR: OSCAR VASQUEZ
CALCULATED-DESIGNED BY: M. SADIQ
CHECKED BY: M. SADIQ
REVISED BY
DATE REVISED

LAST REVISION 00-00-00
DATE PLOTTED => 11-JAN-2011
TIME PLOTTED => 14:07

Dist	COUNTY	ROUTE	POST MILES TOTAL PROJECT	SHEET No.	TOTAL SHEETS
03	Sac	5	0.0/17.2	31	301

2

4

REGISTERED CIVIL ENGINEER — DATE 6-8-10

6-14-10
PLANS APPROVAL DATE

REGISTERED PROFESSIONAL ENGINEER — MOHAMMAD U. SADIQ — No. 67047 — Exp. 9-30-10 — CIVIL — STATE OF CALIFORNIA

THE STATE OF CALIFORNIA OR ITS OFFICERS OR AGENTS SHALL NOT BE RESPONSIBLE FOR THE ACCURACY OR COMPLETENESS OF SCANNED COPIES OF THIS PLAN SHEET.

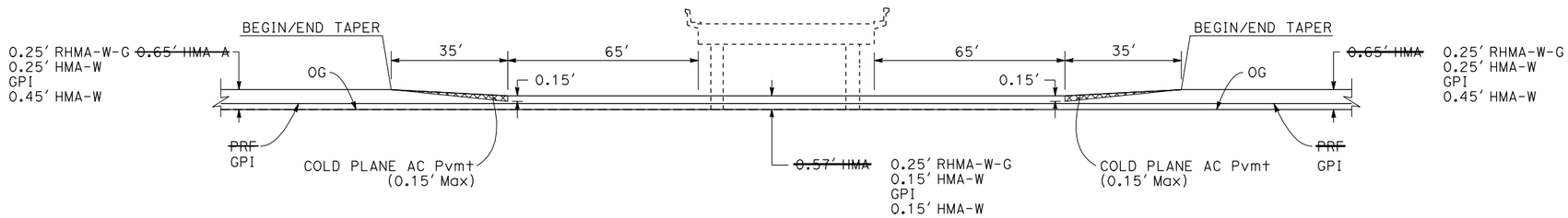

ELEVATION
SOUTH LAND PARK Dr OC

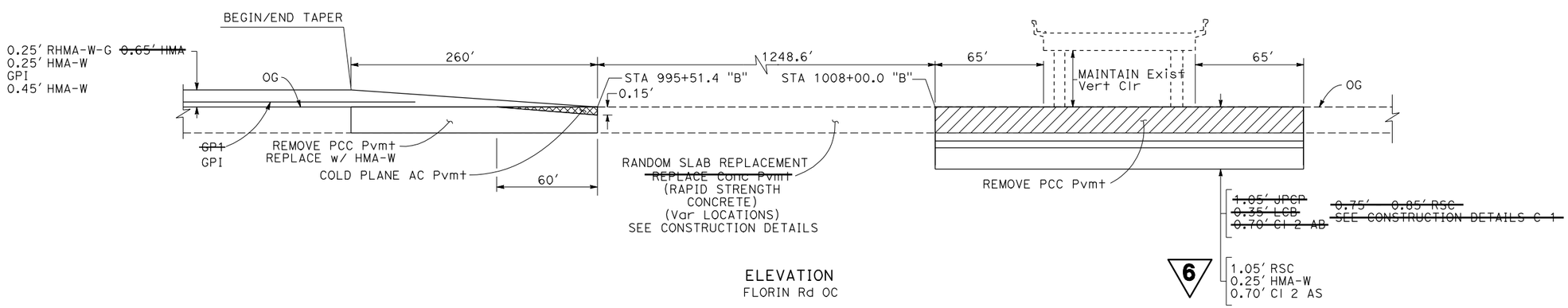

ELEVATION
FLORIN Rd OC

OVERCROSSING PAVEMENT OVERLAY TAPER

2 **REVISED PER ADDENDUM No. 2 DATED NOVEMBER 9, 2010**

4 **REVISED PER ADDENDUM No. 4 DATED DECEMBER 14, 2010**

6 **REVISED PER ADDENDUM No. 6 DATED JANUARY 12, 2011**

CONSTRUCTION DETAILS
NO SCALE

C-3

STATE OF CALIFORNIA - DEPARTMENT OF TRANSPORTATION
Caltrans
NORTH REGION
OFFICE OF DESIGN, SOUTH
DESIGN BRANCH S10

FUNCTIONAL SUPERVISOR: OSCAR VASQUEZ
CALCULATED-DESIGNED BY: M. SADIQ
CHECKED BY: M. SADIQ
REVISED BY
DATE REVISED

LAST REVISION 00-00-00
DATE PLOTTED => 11-JAN-2011
TIME PLOTTED => 14:07

Dist	COUNTY	ROUTE	POST MILES TOTAL PROJECT	SHEET No.	TOTAL SHEETS
03	Sac	5	0.0/17.2	199	301

REGISTERED CIVIL ENGINEER 6-8-10 DATE

6-14-10
PLANS APPROVAL DATE

REGISTERED PROFESSIONAL ENGINEER MOHAMMAD U. SADIQ No. 67047 Exp. 9-30-10 CIVIL STATE OF CALIFORNIA

THE STATE OF CALIFORNIA OR ITS OFFICERS OR AGENTS SHALL NOT BE RESPONSIBLE FOR THE ACCURACY OR COMPLETENESS OF SCANNED COPIES OF THIS PLAN SHEET.

6 REVISED PER ADDENDUM No. 6 DATED JANUARY 12, 2011

ROADWAY QUANTITIES (MAINLINE)

LOCATION/ DESCRIPTION	DIRECTION	JPCP	CLASS 2 AS	CLASS 2 AB	REPLACE CONCRETE PAVEMENT (RAPID STRENGTH CONCRETE)	LCB	COLD PLANE AC PAVEMENT	HOT MIX ASPHALT USING WARM MIX ASPHALT TECHNOLOGIES	RUBBERIZED HOT MIX ASPHALT (OPEN GRADED) USING WARM MIX ASPHALT TECHNOLOGIES	RUBBERIZED HOT MIX ASPHALT (GAP GRADED) USING WARM MIX ASPHALT TECHNOLOGIES	DOWEL BAR RETROFIT	GRIND Exist CONCRETE PAVEMENT	CRACK Exist CONCRETE PAVEMENT	GPI	TACK COAT	ROADWAY EXCAVATION	REMOVE CONCRETE PAVEMENT	IMPORTED MATERIAL (SHOULDER BACKING)	SEAL PAVEMENT JOINT	PAVING ASPHALT (BINDER, GEOSYNTHETIC PAVEMENT INTERLAYER)	GRIND AND GROOVE Exist CONCRETE PAVEMENT
	NB/SB	CY	CY	CY	CY	CY	SQYD	TON	TON	TON	EA	SQYD	SQYD	SQYD	TON	CY	CY	CY	LF	TON	SQYD
PM 0.0 TO PM 3.5, MAINLINE	NB										10,092	~~42,054~~ 16,822							732		25,232
PM 0.0 TO PM 3.5, MAINLINE	SB										10,092	42,054							1,008		
PM 0.0 TO PM 3.5, OUTSIDE SHOULDER	NB			18,207				3,040								19,725					
PM 0.0 TO PM 3.5, OUTSIDE SHOULDER	SB			18,207				3,040								19,725					
PM 0.0 TO PM 3.5, INSIDE SHOULDER	NB						9,103	1,214													
PM 0.0 TO PM 3.5, INSIDE SHOULDER	SB						9,103	1,214													
PM 3.5 TO PM 13.0, MAINLINE	NB							35,055	8,800	21,910			131,574	158,984	~~32.9~~ **450**					170	
PM 3.5 TO PM 13.0, MAINLINE	SB							35,055	8,800	21,910			131,574	158,984	~~32.9~~ **450**					170	
PM 3.5 TO PM 13.0, OUTSIDE SHOULDER	NB			54,823				14,610	745	9,130						66,700		2,800			
PM 3.5 TO PM 13.0, OUTSIDE SHOULDER	SB			54,823				14,610	745	9,130						66,700		2,800			
PM 3.5 TO PM 13.0, INSIDE SHOULDER	NB							13,660	745	5,250					~~5.8~~ **270**			2,800			
PM 3.5 TO PM 13.0, INSIDE SHOULDER	SB							13,660	745	5,250					~~5.8~~ **270**			2,800			
PM 13.0 TO PM 15.5, LANE #1	NB						17,467 ~~8,800~~	~~1,174~~ 2,329													
PM 13.0 TO PM 14.3, LANE #1	SB						~~17,467~~ 8,800	~~2,329~~ 1,174													
PM 13.0 TO PM 15.7, LANE #2	NB	**5460** ~~6,588~~	4,392		**820**			3,138								4,392	**6931** ~~8,156~~		10,584		
PM 13.0 TO PM 15.7, LANE #2	SB	~~6,588~~	4,392		**795**			3,138								4,392	~~8,156~~ **6969**		10,584		
PM 13.0 TO PM 15.7, LANE #3	NB	**5460**																	552		
PM 13.0 TO PM 15.7, LANE #3	SB																		864		
PM 13.0 TO PM 15.7, MEDIAN	NB			47,838				15,670		7,835						51,462					
PM 13.0 TO PM 15.7, MEDIAN	SB			47,838				15,670		7,835						51,462					
PM 15.7 TO PM 17.2, MAINLINE	NB	~~704~~		~~470~~		235		6,930	1,735	4,330			26,000	29,611	~~6.5~~ **87**	906	503		1,044	170	
PM 15.7 TO PM 17.2, MAINLINE	SB	~~704~~		~~470~~		235		6,930	1,735	4,330			26,000	29,611	~~6.5~~ **87**	906	503		1,044	170	
PM 15.7 TO PM 17.2, MEDIAN	NB			23,015				9,136	120	4,570						20,154					
PM 15.7 TO PM 17.2, MEDIAN	SB			23,015				9,136	120	4,570						20,154					
PM 15.7 TO PM 17.2, OUTSIDE SHOULDER	NB							2,345	120	1,470								520			
PM 15.7 TO PM 17.2, OUTSIDE SHOULDER	SB							2,345	120	1,470								520			
MEADOW VIEW POCKET Rd, MAINLINE	NB/SB		**373**		**560** ~~283.3~~		960	**267**											**900**		
SOUTHLAND PARK, MAINLINE	NB/SB				~~283.3~~		560														
FLORIN ROAD, MAINLINE	NB/SB		**684**		**1027**		480	**489**											**1650**		
PM 3.5, MAINLINE	NB/SB						320														
BEACH LAKE ROAD, MAINLINE	NB/SB						960														
STA "B" 840+00 TO 857+46 MEDIAN							1,746														
STA "B" 884+68 TO 886+08 MEDIAN							140														
STA "B" 887+22 TO 924+00 MEDIAN							3,678														
STA "B" 857+46 TO 884+68 MEDIAN							2,722														
STA "B" 886+08 TO 887+22 MEDIAN							114														
STA "B" 931+00 TO 1006+00 MEDIAN							7,500														
TOTAL FROM ROAD QUANTITIES (RAMP) TABLE	NB/SB			3,740	**7217.2**		151,544	31,480.0	3,113	14,468					**529.6** ~~37.8~~	4,400		870.7			
TOTAL FROM REPLACE CONCRETE TABLE	NB/SB				~~9,776.3~~			26,321.2				17,648.7					13,160.6				
TOTAL FROM HMA DIKE TABLE	NB/SB							123.4													
TOTAL FROM GORE AND ISLAND PAVING TABLE	NB/SB															1,294.5					
TOTAL		~~13,176~~ **10,920**	~~8,784~~ **9,841**	291,506	~~10,342.9~~ **10,419.2**	470	215,197	~~271,023.6~~ **271,779.6**	27,643	123,458	20,184	~~101,756.7~~ 76,524.7	315,148	377,190	~~128.2~~ **2,143.6**	332,372.5	~~30,478.6~~ **28,066.6**	13,110.7	~~26,412~~ **28,962**	404	25,232

2 REVISED PER ADDENDUM No. 2 DATED NOVEMBER 9, 2010

4 REVISED PER ADDENDUM No. 4 DATED DECEMBER 14, 2010

SUMMARY OF QUANTITIES

Q-1

REVISED BY | DATE REVISED
M. SADIQ | M. SADIQ
CALCULATED-DESIGNED BY | CHECKED BY
FUNCTIONAL SUPERVISOR
OSCAR VASQUEZ

STATE OF CALIFORNIA - DEPARTMENT OF TRANSPORTATION
Caltrans
NORTH REGION
OFFICE OF DESIGN, SOUTH
DESIGN BRANCH S10

LAST REVISION 00-00-00 | DATE PLOTTED => 11-JAN-2011 | TIME PLOTTED => 14:07

Dist	COUNTY	ROUTE	POST MILES TOTAL PROJECT	SHEET No.	TOTAL SHEETS
03	Sac	5	0.0/17.2	200	301

REGISTERED CIVIL ENGINEER 6-8-10 DATE

6-14-10
PLANS APPROVAL DATE

REGISTERED PROFESSIONAL ENGINEER MOHAMMAD U. SADIQ No. 67047 Exp. 9-30-10 CIVIL STATE OF CALIFORNIA

THE STATE OF CALIFORNIA OR ITS OFFICERS OR AGENTS SHALL NOT BE RESPONSIBLE FOR THE ACCURACY OR COMPLETENESS OF SCANNED COPIES OF THIS PLAN SHEET.

2

6

ROADWAY QUANTITIES (RAMPS)

LOCATION/ DESCRIPTION	DIRECTION	COLD PLANE AC Pvmt	ROADWAY EXCAVATION	EMBANKMENT (N)	CLASS 2 AB	HOT MIX ASPHALT USING WARM MIX ASPHALT TECHNOLOGIES	RUBBERIZED HOT MIX ASPHALT (GAP GRADED) USING WARM MIX ASPHALT TECHNOLOGIES	RUBBERIZED HOT MIX ASPHALT (OPEN GRADED) USING WARM MIX ASPHALT TECHNOLOGIES	TACK COAT	IMPORTED MATERIAL (SHOULDER BACKING)
	NB/SB	SQYD	CY	CY	CY	TON	TON	TON	TON	CY
TWIN CITIES Rd SLIP OFF RAMP	NB	2,940				980	490		~~0.7~~ 12.5	50.9
TWIN CITIES Rd SLIP SLIP ON RAMP	NB	2,392				797	399		~~0.6~~ 10.2	39.4
TWIN CITIES Rd SLIP OFF RAMP	SB	2,940				980	490		~~0.7~~ 12.5	53.2
TWIN CITIES Rd SLIP ON RAMP	SB	2,392				797	399		~~0.6~~ 10.2	39.8
HOOD FRANKLIN Rd SLIP OFF RAMP	NB	5,294				1,765	882		~~1.3~~ 22.5	63.4
HOOD FRANKLIN Rd LOOP ON RAMP	NB	4,384				1,456	730		~~1.1~~ 18.7	33.8
HOOD FRANKLIN Rd SLIP ON RAMP	NB	6,620				2,205	1,103		~~1.7~~ 28.2	60.2
HOOD FRANKLIN Rd SLIP OFF RAMP	SB	5,253				1,750	875		~~1.3~~ 22.4	63.9
HOOD FRANKLIN Rd LOOP ON RAMP	SB	4,013				1,337	669		~~1.0~~ 17.1	26.9
HOOD FRANKLIN Rd SLIP ON RAMP	SB	7,102				2,366	1,183		~~1.8~~ 30.2	61.1
ELK GROVE Blvd SLIP OFF RAMP	NB	4,546				758		239	~~1.1~~ 14.5	46.3
ELK GROVE Blvd SLIP ON RAMP	NB	13,012	4,400	580	3,740	1,174	734	683	~~3.3~~ 41.5	
ELK GROVE Blvd SLIP OFF RAMP	SB	4,826				804		253	~~1.2~~ 15.4	55.6
ELK GROVE Blvd LOOP ON RAMP	SB	4,802				800		252	~~1.2~~ 15.3	31.0
LAGUNA Blvd SLIP OFF RAMP	NB	3,986				664		209	~~1.0~~ 12.7	47.5
LAGUNA Blvd SLIP ON RAMP	NB	14,466				2,411		759	~~3.6~~ 46.2	55.1
LAGUNA Blvd SLIP OFF RAMP	SB	7,626				1,271		400	~~1.9~~ 24.3	87.0
LAGUNA Blvd LOOP ON RAMP	SB	6,058				1,010		318	~~1.5~~ 19.3	55.6
POCKET Rd / MEADOWVIEW Rd SLIP OFF RAMP	NB	4,453				742	594		~~1.1~~ 14.2	
POCKET Rd / FREEPORT SLIP OFF RAMP	SB	5,803				969	774		~~1.5~~ 18.5	
POCKET Rd / FREEPORT LOOP ON RAMP	SB	4,067				678	542		~~1.0~~ 13.0	
POCKET Rd / FREEPORT SLIP ON RAMP	SB	5,708				952	760		~~1.4~~ 18.2	
FLORIN Rd SLIP OFF RAMP	NB	7,741				1,291	1,031		~~1.9~~ 24.7	
FLORIN Rd LOOP ON RAMP	NB	10,228				1,706	1,363		~~2.6~~ 32.6	
FLORIN Rd LOOP OFF RAMP	SB	1,204				201	160		~~0.3~~ 3.8	
FLORIN Rd SLIP ON RAMP	SB	9,688				1,616	1,290		~~2.4~~ 30.9	
	TOTAL	151,544*	4,400*	580	3,740*	31,480*	14,468*	3,113*	~~37.8*~~ 529.6*	870.7*

(N) - NOT A SEPARATE PAY ITEM, FOR INFORMATION ONLY

* SEE ROADWAY QUANTITIES (MAINLINE) TABLE FOR TOTAL ITEM QUANTITY

2 **REVISED PER ADDENDUM No. 2 DATED NOVEMBER 9, 2010**

6 **REVISED PER ADDENDUM No. 6 DATED JANUARY 12, 2011**

SUMMARY OF QUANTITIES

Q-2

STATE OF CALIFORNIA - DEPARTMENT OF TRANSPORTATION
Caltrans
NORTH REGION
OFFICE OF DESIGN, SOUTH
DESIGN BRANCH S10

FUNCTIONAL SUPERVISOR: OSCAR VASQUEZ

CALCULATED-DESIGNED BY: M. SADIQ
CHECKED BY: M. SADIQ

REVISED BY
DATE REVISED

LAST REVISION 00-00-00
DATE PLOTTED => 11-JAN-2011
TIME PLOTTED => 14:08

Dist	COUNTY	ROUTE	POST MILES TOTAL PROJECT	SHEET No.	TOTAL SHEETS
03	Sac	5	0.0/17.2	201	301

Usman Sadiq 6-8-10
REGISTERED CIVIL ENGINEER DATE

6-14-10
PLANS APPROVAL DATE

REGISTERED PROFESSIONAL ENGINEER MOHAMMAD U. SADIQ No. 67047 Exp. 9-30-10 CIVIL STATE OF CALIFORNIA

THE STATE OF CALIFORNIA OR ITS OFFICERS OR AGENTS SHALL NOT BE RESPONSIBLE FOR THE ACCURACY OR COMPLETENESS OF SCANNED COPIES OF THIS PLAN SHEET.

METAL BEAM GUARD RAILING

POST MILE LIMITS	LOCATION	REMOVE MBGR	REMOVE DOUBLE METAL BEAM BARRIER	RECONSTRUCT MBGR	END ANCHOR ASSEMBLY (TYPE SFT)	TRANSITION RAILING (TYPE WB)	MBGR (STEEL POST)	6 DOUBLE MBGR ~~(WOOD POST)~~ (STEEL POST)	ALTERNATIVE FLARED TERMINAL SYSTEM	TERMINAL SYSTEM (TYPE CAT)	TERMINAL SYSTEM (TYPE CAT) BACKUP	RAIL TENSIONING ASSEMBLY	(N) LAYOUT TYPE	
	NB/SB	LF	LF	LF	EA	EA	LF	LF	EA	EA	EA	EA		
PM 0.20 TO 0.21	SB	62.5				1			1				12C	MOKELUMNE RIVER Br
PM 0.20 TO 0.26	SB	125.0				1	25.0	237.5		1	1	1	12E	
PM 0.73 TO 0.74	SB	62.5				1			1				12C	MIDDLE SLOUGH Br
PM 0.73 TO 0.79	SB	125.0				1	25.0	225.0		1	1	1	12E	
PM 1.20 TO 1.21	SB	62.5				1			1				12C	LOST SLOUGH Br
PM 1.20 TO 1.26	SB	125.0				1	25.0	225.0		1	1	1	12E	
PM 2.32 TO 2.34	SB				1		37.5		1				16B	OVERHEAD SIGN
PM 4.68 TO 4.69	SB	62.5				1			1				12C	LAMBERT Rd UC
PM 4.68 TO 4.73	SB	87.5	187.5			1	25.0	212.5		1	1	1	12E	
PM 8.11 TO 8.12	SB	62.5				1			1				12C	STONE LAKE Cr Br
PM 8.11 TO 8.16	SB	87.5	187.5			1	25.0	212.5					12E	
PM 8.80 TO 8.82	SB	62.5			1		37.5		1				16B	OVERHEAD SIGN
PM 11.12 TO 11.13	SB	62.5			1		37.5		1				16B	OVERHEAD SIGN
PM 12.38 TO 12.42	SB	212.5			1		187.5		1				16B	OVERHEAD SIGN
PM 12.67 TO 12.68	SB	75.0			1		50.0		1				16B	OVERHEAD SIGN
PM 15.66 TO 16.01	SB			1850.0					1				12B	
PM 16.41 TO 16.42	SB				1		37.5		1				16B	OVERHEAD SIGN
PM 16.42 TO 16.43	SB	62.5												
PM 17.04 TO 17.05	SB							62.5		1	1	1		FLORIN Rd
PM 0.63 TO 0.68	NB	125.0				1	25.0	225.0		1	1	1	12E	MIDDLE SLOUGH Br
PM 0.67 TO 0.68	NB	62.5				1			1				12C	
PM 0.96 TO 1.02	NB	125.0				1	25.0	237.5		1	1	1	12E	LOST SLOUGH Br
PM 1.01 TO 1.02	NB	62.5				1			1				12C	
PM 1.89 TO 1.90	NB	62.5			1		37.5		1				16B	OVERHEAD SIGN
PM 4.57 TO 4.63	NB	87.5	175.0			1	25.0	212.5		1	1	1	12E	LAMBERT Rd UC
PM 4.62 TO 4.63	NB	62.5				1			1				12C	
PM 8.03 TO 8.09	NB	100.0	175.0			1	25.0	225.0		1	1	1	12E	STONE LAKE Cr Br
PM 8.08 TO 8.09	NB	62.5				1			1				12C	
PM 10.52 TO 10.53	NB	62.5	62.5		1		37.5		1				16B	OVERHEAD SIGN
PM 11.77 TO 11.78	NB	62.5			1		37.5		1				16B	OVERHEAD SIGN
PM 12.91 TO 12.92	NB	37.5					12.5		1				12B	BEACH LAKE BRIDGE
PM 15.68 TO 15.85	NB			850.0	1								12DD	
PM 2.10 TO 2.12	Med	200.0												
PM 2.10 TO 2.13	Med				2		100.0	50.0		2	2	2	14A	TWIN CITIES Rd
PM 3.11 TO 3.13	Med	200.0												
PM 3.11 TO 3.14	Med				2		100.0	50.0		2	2	2	14A	DIERSSEN Rd OC
PM 8.47 TO 8.48	Med	200.0												
PM 8.46 TO 8.49	Med				2		100.0	50.0		2	2	2	14A	HOOD FRANKLIN Rd
PM 10.80 TO 10.82	Med	200.0												
PM 10.79 TO 10.83	Med				2		100.0	50.0		2	2	2	14A	ELK GROVE Blvd
	TOTAL	3,050.0	787.5	2,700.0	18	18	1,137.5	2,275.0	20	17	17	8		

(N) - NOT A SEPARATE PAY ITEM, FOR INFORMATION ONLY

6 **REVISED PER ADDENDUM No. 6 DATED JANUARY 12, 2011**

SUMMARY OF QUANTITIES

Q-3

STATE OF CALIFORNIA - DEPARTMENT OF TRANSPORTATION
Caltrans®
NORTH REGION
OFFICE OF DESIGN, SOUTH
DESIGN BRANCH S10

FUNCTIONAL SUPERVISOR: OSCAR VASQUEZ
CALCULATED-DESIGNED BY: M. SADIQ
CHECKED BY: M. SADIQ
REVISED BY
DATE REVISED

LAST REVISION 00-00-00
DATE PLOTTED => 11-JAN-2011
TIME PLOTTED => 14:08

Dist	COUNTY	ROUTE	POST MILES TOTAL PROJECT	SHEET No.	TOTAL SHEETS
03	Sac	5	0.0/17.2	204	301

2
4
6

REGISTERED CIVIL ENGINEER 6-8-10 DATE

6-14-10
PLANS APPROVAL DATE

REGISTERED PROFESSIONAL ENGINEER MOHAMMAD U. SADIQ No. 67047 Exp. 9-30-10 CIVIL STATE OF CALIFORNIA

THE STATE OF CALIFORNIA OR ITS OFFICERS OR AGENTS SHALL NOT BE RESPONSIBLE FOR THE ACCURACY OR COMPLETENESS OF SCANNED COPIES OF THIS PLAN SHEET.

REPLACE CONCRETE PAVEMENT

POST MILES FROM	POST MILES TO	DIRECTION	LANE No.	No. OF SLABS	REPLACE CONCRETE PAVEMENT (RAPID STRENGTH CONCRETE) CY	REMOVE CONCRETE PAVEMENT CY	HOT MIX ASPHALT USING WARM MIX ASPHALT TECHNOLOGIES TON	GRIND Exist CONCRETE PAVEMENT SQYD
0.0	0.5	NB	1	1	9.6			25.2
			2	29	259.7			681.8
0.5	1.0	NB	1	4	41.6			109.2
			2	43	383.5			1006.6
1.0	1.5	NB	1	4	36.3			95.2
			2	3	30.4			79.8
1.5	2.0	NB						
			2	7	70.9			186.2
2.0	2.5	NB	1	2	10.1			26.6
			2	5	39.5			103.6
2.5	3.0	NB						
			2	13	109.3			287.0
3.0	3.5	NB	1	4	19.7			51.8
			2	21	172.3			452.2
3.5	4.07	NB	1	5		46.2	92.4	
			2	28		258.8	517.7	
4.07	4.91	NB	1	7		64.7	129.4	
			2	42		388.3	776.5	
4.91	5.73	NB	1	4		37.0	74.0	
			2	23		212.6	425.2	
5.73	6.47	NB	1	10		92.4	184.8	
			2	57		526.9	1053.8	
6.47	7.0	NB	1	9		83.2	166.4	
			2	51		471.5	943.0	
7.0	8.5	NB	1	9		83.2	166.4	
			2	52		480.7	961.4	
8.5	11.0	NB	1	8		74.0	148.0	
			2	47		434.5	869.0	
11.0	11.65	NB	1	12		110.9	221.8	
			2	68		628.6	1257.2	
11.65	12.0	NB	1	6		55.5	111.0	
			3	37		342.0	684.0	
12.0	12.5	NB						
			3	39		367.5	735.0	
12.5	13.0	NB						
			3	22		209.7	419.4	
13.0	13.5	NB	~~2~~	~~63~~	~~597.6~~			
			3	45	414.4			1087.8
13.5	14.0	NB						
			3	28	264			693.0
14.0	14.5	NB						
			3	38	355.2			932.4
14.5	15.0	NB						
			3	32	303.5			796.6
15.0	15.5	NB						
			3	21	201.6			529.2
15.5	15.7	NB	~~2~~	~~73~~	~~700.5~~			
			3	4	35.7			93.8
15.7	17.2	NB	2	1		9.6	19.2	
			3	2		12.8	25.6	
TOTAL FOR NORTHBOUND					**2,757.3** ~~2,757.3~~ ~~4,055.4~~	4,990.6	9,981.2	7,238.0

2 **REVISED PER ADDENDUM No. 2 DATED NOVEMBER 9, 2010**

4 **REVISED PER ADDENDUM No. 4 DATED DECEMBER 14, 2010**

REPLACE CONCRETE PAVEMENT

POST MILES FROM	POST MILES TO	DIRECTION	LANE No.	No. OF SLABS	REPLACE CONCRETE PAVEMENT (RAPID STRENGTH CONCRETE) CY	REMOVE CONCRETE PAVEMENT CY	HOT MIX ASPHALT USING WARM MIX ASPHALT TECHNOLOGIES TON	GRIND Exist CONCRETE PAVEMENT SQYD
0.0	0.5	SB						
			2	15	134.0			309.3
0.5	1.0	SB						
			2	27	250.2			577.3
1.0	1.5	SB						
			2	12	110.4			254.7
1.5	2.0	SB						
			2	3	31.2			72.0
2.0	2.5	SB						
			2	7	64.1			148.0
2.5	3.0	SB						
			2	35	899.1			2074.7
3.0	3.5	SB						
			2	55	507.3			1170.7
3.5	4.0	SB	1	10		90.0	180.0	
			2	55		511.0	1,022.0	
4.0	4.6	SB	1	12		119.0	238.0	
			2	63		674.0	1,348.0	
4.6	6.25	SB	1	41		379.0	758.0	
			2	232		2,147.0	4,294.0	
6.25	6.5	SB	1	1		9.0	18.0	
			2	3		26.0	52.0	
			3	3		26.0	52.0	
6.5	7.5	SB	1	7		61.0	122.0	
			2	19		165.0	330.0	
			3	17		147.0	294.0	
7.5	8.0	SB	1	4		35.0	70.0	
			2	19		165.0	330.0	
			3	28		243.0	486.0	
8.0	10.0	SB	1	7		60.0	120.0	
			2	41		356.0	712.0	
			3	63		545.0	1,090.0	
10.0	12.0	SB	1	1		9.0	18.0	
			2	18		156.0	312.0	
			3	27		234.0	468.0	
12.0	13.0	SB	1	9		85.0	170.0	
			2	28		255.0	510.0	
			3	147		1,359.0	2,718.0	
13.0	13.5	SB	~~2~~	~~67~~	~~641.9~~			
			3	26	195.0			569.3
13.5	14.0	SB						
			3	60	561.0			1294.7
14.0	14.5	SB						
			3	49	450.1			1038.7
14.5	15.0	SB						
			3	46	429.3			990.7
15.0	15.5	SB						
			3	68	633.2			1,461.3
15.5	15.7	SB	~~2~~	~~65~~	~~619.1~~			
			3	21	195.0			449.3
15.7	17.2	SB	2	28		259.0	518.0	
			3	6		55.0	110.0	
TOTAL FOR SOUTHBOUND					~~4,459.9~~	8,170.0	16,340.0	10,410.7
TOTAL FOR NORTHBOUND					~~2,757.3~~	4,990.6	9,981.2	7,238.0
TOTAL					~~7,217.2~~	13,160.6*	26,321.2*	17,648.7*

4,459.9 ~~5,720.9~~
2,757.3 ~~4,055.4~~
7,217.2* ~~9,776.3*~~

* SEE ROADWAY QUANTITIES (MAINLINE) TABLE FOR TOTAL QUANTITY

6 **REVISED PER ADDENDUM No. 6 DATED JANUARY 12, 2011**

SUMMARY OF QUANTITIES

Q-6

REVISED BY | DATE REVISED
M. SADIQ | M. SADIQ
CALCULATED-DESIGNED BY | CHECKED BY
FUNCTIONAL SUPERVISOR: OSCAR VASQUEZ

STATE OF CALIFORNIA - DEPARTMENT OF TRANSPORTATION
Caltrans®
NORTH REGION
OFFICE OF DESIGN, SOUTH
DESIGN BRANCH 910

LAST REVISION 00-00-00 | DATE PLOTTED => 11-JAN-2011 | TIME PLOTTED => 14:08