ACBHSTP-P070(100)

Dist	COUNTY	ROUTE	POST MILES TOTAL PROJECT	SHEET No.	TOTAL SHEETS
03	But	70	24.0/24.5	1	123

STATE OF CALIFORNIA
DEPARTMENT OF TRANSPORTATION

PROJECT PLANS FOR CONSTRUCTION ON
STATE HIGHWAY

IN BUTTE COUNTY
ABOUT 9 MILES EAST OF OROVILLE
AT FLAG CANYON CREEK BRIDGE

TO BE SUPPLEMENTED BY STANDARD PLANS DATED 2010

INDEX OF PLANS

SHEET No.	DESCRIPTION
1	TITLE AND LOCATION MAP
2-4	TYPICAL CROSS SECTIONS
5	PROJECT CONTROL
6-8	LAYOUTS
9	PROFILES AND SUPERELEVATION DIAGRAMS
10-18	CONSTRUCTION DETAILS
19-22	DRAINAGE PLANS, PROFILES, DETAILS AND QUANTITIES
23	CONSTRUCTION AREA SIGNS
24-25	MOTORIST INFORMATION PLANS
26-32	STAGE CONSTRUCTION PLANS
33-40	TRAFFIC HANDLING PLANS AND QUANTITIES
41-44	DETOUR PLAN
45-46	PAVEMENT DELINEATION AND SIGN PLANS
47-48	PAVEMENT DELINEATION AND SIGN PLAN QUANTITIES
49-50	SUMMARY OF QUANTITIES
51-54	EROSION CONTROL LEGEND, PLAN AND QUANTITIES
55-62	ELECTRICAL PLANS
63-71	SPECIAL ELECTRICAL STRUCTURES
72-107	REVISED STANDARD PLANS

STRUCTURE PLANS

108-117	FLAG CANYON CREEK BRIDGE, Br No. 12-0204
118-123	TEMPORARY FLAG CANYON CREEK BRIDGE

THE STANDARD PLANS LIST APPLICABLE TO THIS CONTRACT IS INCLUDED IN THE NOTICE TO BIDDERS AND SPECIAL PROVISIONS BOOK.

LOCATION MAP

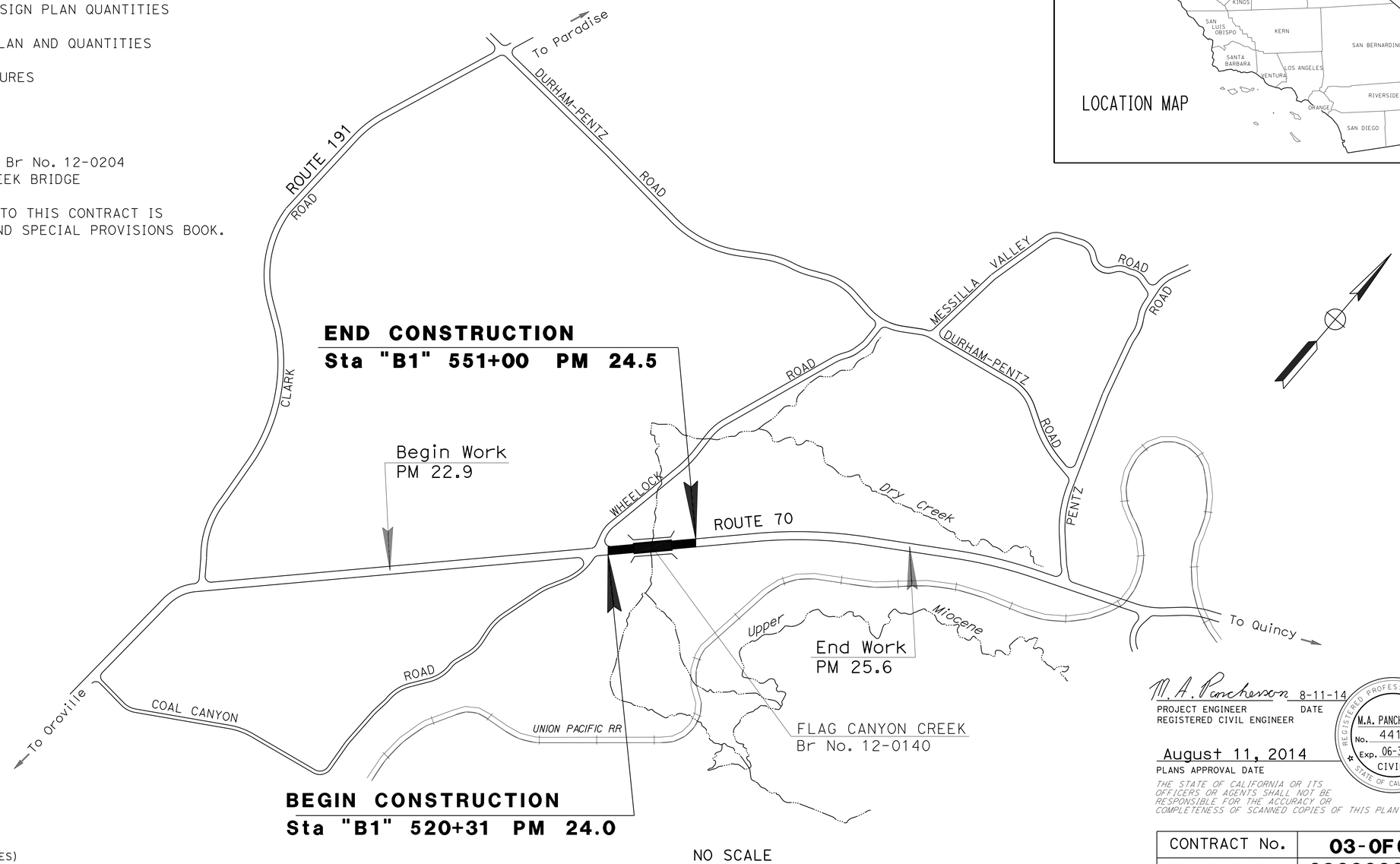

NO SCALE

THE CONTRACTOR SHALL POSSESS THE CLASS (OR CLASSES) OF LICENSE AS SPECIFIED IN THE "NOTICE TO BIDDERS."

M.A. Panchesson 8-11-14
PROJECT ENGINEER DATE
REGISTERED CIVIL ENGINEER

August 11, 2014
PLANS APPROVAL DATE

REGISTERED PROFESSIONAL ENGINEER
M.A. PANCHESSON
No. 44125
Exp. 06-30-15
CIVIL
STATE OF CALIFORNIA

THE STATE OF CALIFORNIA OR ITS OFFICERS OR AGENTS SHALL NOT BE RESPONSIBLE FOR THE ACCURACY OR COMPLETENESS OF SCANNED COPIES OF THIS PLAN SHEET.

CONTRACT No.	03-0F6904
PROJECT ID	0300000100

PROJECT MANAGER: RODNEY MURPHY
DESIGN ENGINEER: ALI KIANI

LAST REVISION 00-00-00
DATE PLOTTED => 22-OCT-2014
TIME PLOTTED => 11:17

Dist	COUNTY	ROUTE	POST MILES TOTAL PROJECT	SHEET No.	TOTAL SHEETS
03	But	70	24.0/24.5	2	123

M. A. Panchesson 8-11-14
REGISTERED CIVIL ENGINEER DATE

8-11-14
PLANS APPROVAL DATE

REGISTERED PROFESSIONAL ENGINEER M.A. PANCHESSON No. 44125 Exp. 06-30-15 CIVIL STATE OF CALIFORNIA

THE STATE OF CALIFORNIA OR ITS OFFICERS OR AGENTS SHALL NOT BE RESPONSIBLE FOR THE ACCURACY OR COMPLETENESS OF SCANNED COPIES OF THIS PLAN SHEET.

NOTES:

1. DIMENSIONS OF THE PAVEMENT STRUCTURES (STRUCTURAL SECTIONS) ARE SUBJECT TO TOLERANCES SPECIFIED IN THE STANDARD SPECIFICATIONS.
2. EXISTING PAVEMENT SECTIONS SHOWN ARE BASED ON AS-BUILT INFORMATION AND ARE SUBJECT TO VARIATION DUE TO CONSTRUCTION TOLERANCES AND INTERIM ROADWAY ACTIVITIES.
3. FOR SAFETY EDGE CASE B, SEE REVISED Std PLANS P74 & P75.
4. SEE "SUMMARY OF QUANTITIES" PLANS FOR COLD PLANE LOCATIONS.

PAVEMENT CLIMATE REGION

INLAND VALLEY

ABBREVIATION:

DESIGN DESIGNATION (ROUTE 70)

ADT (2016) = 3,390
ADT (2036) = 4,870
DHV (2036) = 530 TI_{20} = 9.5
ESAL (2036) = 1,575,000 V = 70 MPH

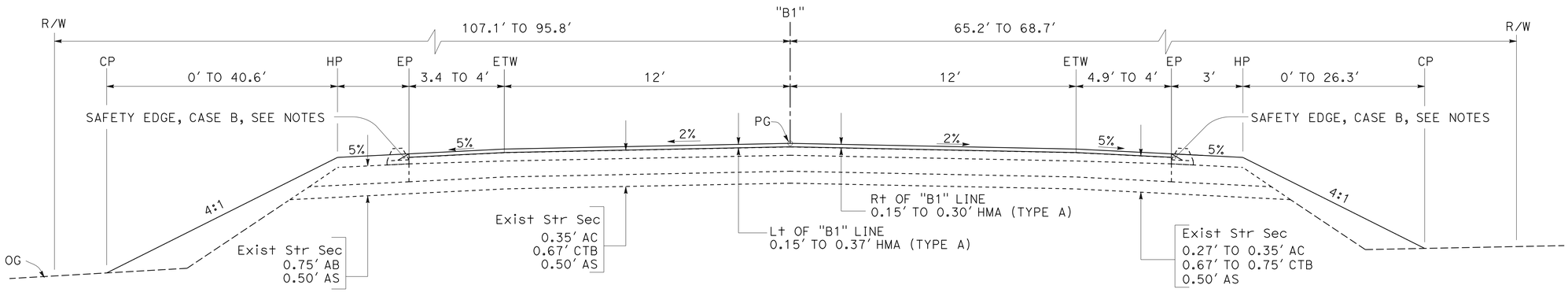

ROUTE 70

Sta "B1" 526+50 TO Sta "B1" 529+50

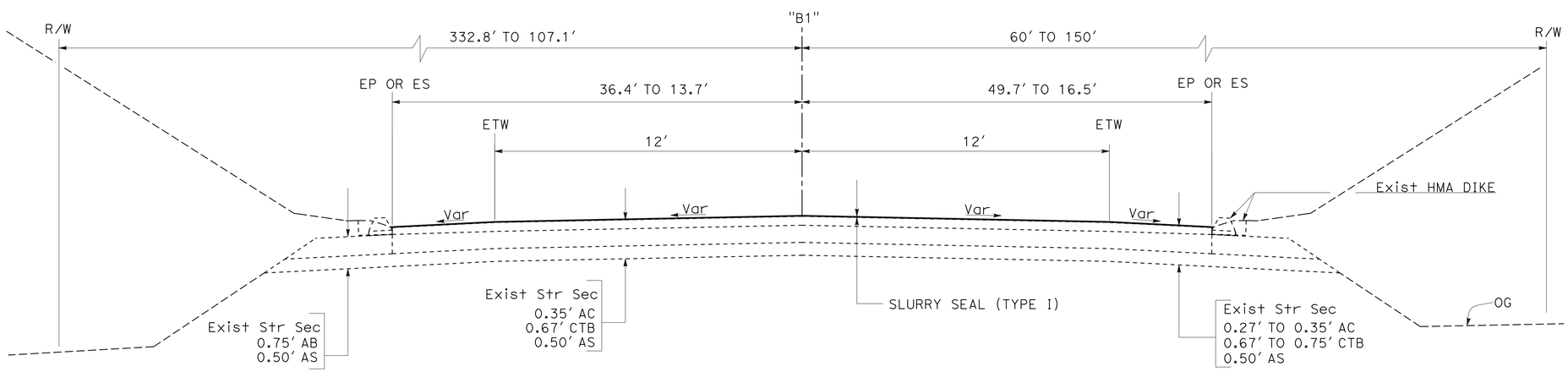

ROUTE 70

Sta "B1" 541+50 TO Sta "B1" 551+00
Sta "B1" 520+31 TO Sta "B1" 526+50

TYPICAL CROSS SECTIONS

NO SCALE

X-1

STATE OF CALIFORNIA - DEPARTMENT OF TRANSPORTATION
Caltrans
DESIGN
FUNCTIONAL SUPERVISOR: ALI KIANI
CALCULATED-DESIGNED BY: MIKE PANCHESSON
CHECKED BY: DON WEHRLY
REVISED BY
DATE REVISED

LAST REVISION 00-00-00
DATE PLOTTED => 20-OCT-2014
TIME PLOTTED => 13:48

Dist	COUNTY	ROUTE	POST MILES TOTAL PROJECT	SHEET No.	TOTAL SHEETS
03	But	70	24.0/24.5	3	123

M. A. Panchesson 8-11-14
REGISTERED CIVIL ENGINEER DATE

8-11-14
PLANS APPROVAL DATE

REGISTERED PROFESSIONAL ENGINEER M.A. PANCHESSON No. 44125 Exp. 06-30-15 CIVIL STATE OF CALIFORNIA

THE STATE OF CALIFORNIA OR ITS OFFICERS OR AGENTS SHALL NOT BE RESPONSIBLE FOR THE ACCURACY OR COMPLETENESS OF SCANNED COPIES OF THIS PLAN SHEET.

NOTES:

1. DIMENSIONS OF THE PAVEMENT STRUCTURES (STRUCTURAL SECTIONS) ARE SUBJECT TO TOLERANCES SPECIFIED IN THE STANDARD SPECIFICATIONS.
2. EXISTING PAVEMENT SECTIONS SHOWN ARE BASED ON AS-BUILT INFORMATION AND ARE SUBJECT TO VARIATION DUE TO CONSTRUCTION TOLERANCES AND INTERIM ROADWAY ACTIVITIES.
3. SEE "SUMMARY OF QUANTITIES" PLANS FOR DIKE AND GUARDRAIL LOCATIONS.
4. OG AFTER DETOUR CONSTRUCTED. SEE "DETOUR" PLANS.
5. FOR SAFETY EDGE DETAIL "B", SEE REVISED Std PLANS P74 & P76.

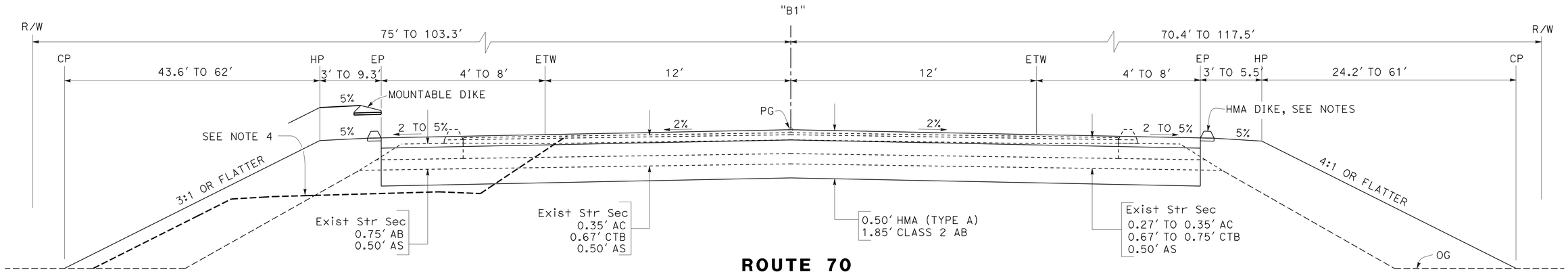

ROUTE 70

Sta "B1" 537+30.25 TO Sta "B1" 538+40
Sta "B1" 531+00 TO Sta "B1" 536+36

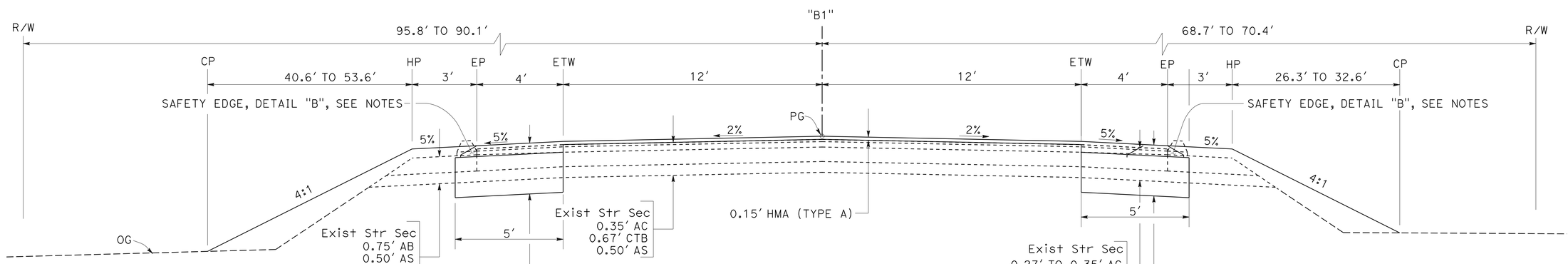

ROUTE 70

Sta "B1" 529+50 TO Sta "B1" 531+00

TYPICAL CROSS SECTIONS

NO SCALE

X-2

REVISED BY	DATE REVISED

CALCULATED-DESIGNED BY: MIKE PANCHESSON
CHECKED BY: DON WEHRLY
FUNCTIONAL SUPERVISOR: ALI KIANI

STATE OF CALIFORNIA - DEPARTMENT OF TRANSPORTATION
Caltrans
DESIGN

LAST REVISION 00-00-00
DATE PLOTTED => 20-OCT-2014
TIME PLOTTED => 13:48

Dist	COUNTY	ROUTE	POST MILES TOTAL PROJECT	SHEET No.	TOTAL SHEETS
03	But	70	24.0/24.5	4	123

M. A. Panchesson 8-11-14
REGISTERED CIVIL ENGINEER DATE

8-11-14
PLANS APPROVAL DATE

REGISTERED PROFESSIONAL ENGINEER
M.A. PANCHESSON
No. 44125
Exp. 06-30-15
CIVIL
STATE OF CALIFORNIA

THE STATE OF CALIFORNIA OR ITS OFFICERS OR AGENTS SHALL NOT BE RESPONSIBLE FOR THE ACCURACY OR COMPLETENESS OF SCANNED COPIES OF THIS PLAN SHEET.

NOTES:

1. DIMENSIONS OF THE PAVEMENT STRUCTURES (STRUCTURAL SECTIONS) ARE SUBJECT TO TOLERANCES SPECIFIED IN THE STANDARD SPECIFICATIONS.
2. EXISTING PAVEMENT SECTIONS SHOWN ARE BASED ON AS-BUILT INFORMATION AND ARE SUBJECT TO VARIATION DUE TO CONSTRUCTION TOLERANCES AND INTERIM ROADWAY ACTIVITIES.
3. SEE "SUMMARY OF QUANTITIES" PLANS FOR DIKE LOCATIONS.
4. OG AFTER DETOUR CONSTRUCTED. SEE "DETOUR" PLANS.
5. FOR SAFETY EDGE DETAIL "B", SEE REVISED Std PLANS P74 & P76.
5. SEE SHEET C-9 FOR GUTTER FLARE DETAIL AT STA LT "B1" 540+50 TO 540+75.

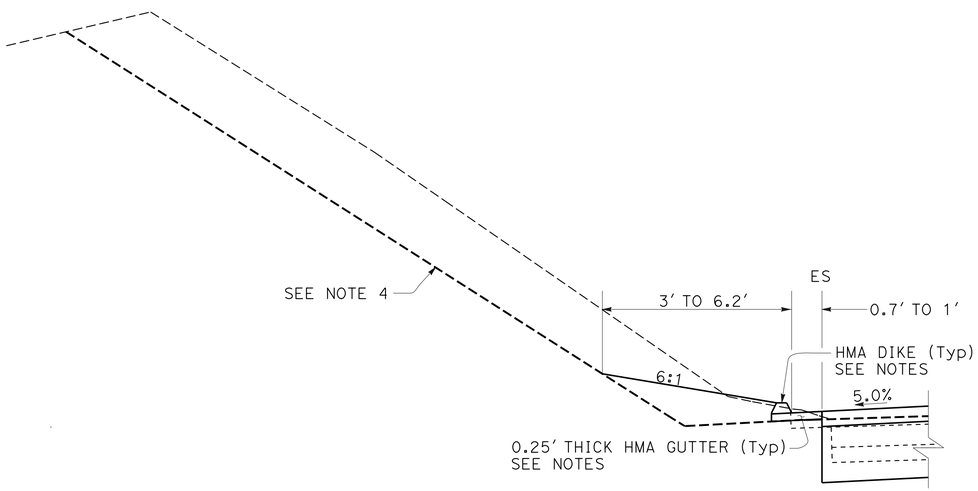

Sta Lt "B1" 540+75 TO Sta Lt "B1" 541+50

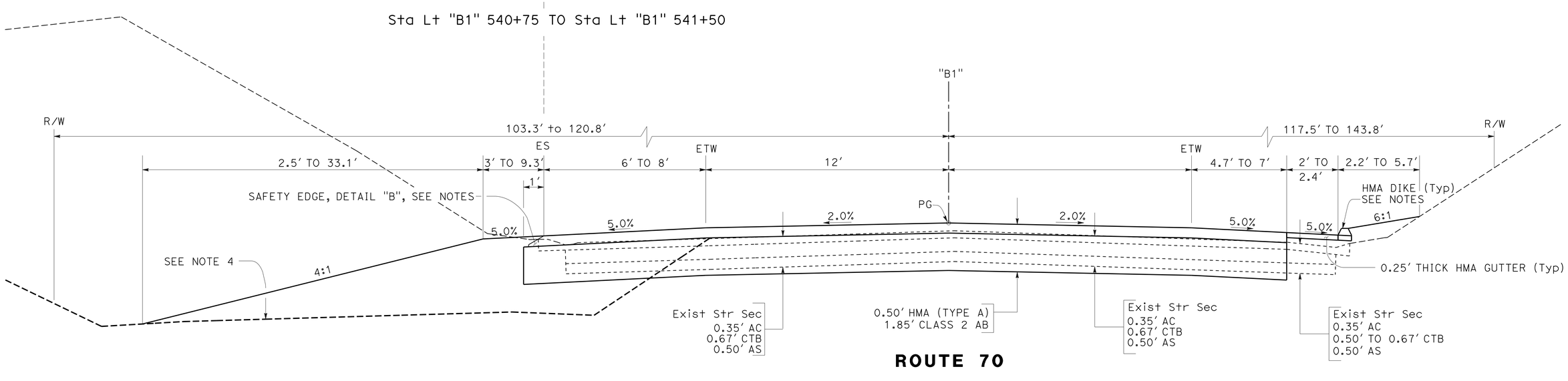

ROUTE 70

Sta "B1" 538+40 TO Sta "B1" 541+50

TYPICAL CROSS SECTIONS

NO SCALE

X-3

STATE OF CALIFORNIA - DEPARTMENT OF TRANSPORTATION
Caltrans®
DESIGN
FUNCTIONAL SUPERVISOR: ALI KIANI
CALCULATED-DESIGNED BY: MIKE PANCHESSON
CHECKED BY: DON WEHRLY
REVISED BY
DATE REVISED

LAST REVISION 00-00-00
DATE PLOTTED => 20-OCT-2014
TIME PLOTTED => 13:48

Dist	COUNTY	ROUTE	POST MILES TOTAL PROJECT	SHEET No.	TOTAL SHEETS
03	But	70	24.0/24.5	5	123

PROFESSIONAL LAND SURVEYOR — DATE 8-11-14

8-11-14
PLANS APPROVAL DATE

PROFESSIONAL LAND SURVEYOR — M. McCALLIGAN No. 6885 Exp. 12-31-14 — STATE OF CALIFORNIA

THE STATE OF CALIFORNIA OR ITS OFFICERS OR AGENTS SHALL NOT BE RESPONSIBLE FOR THE ACCURACY OR COMPLETENESS OF SCANNED COPIES OF THIS PLAN SHEET.

NOTES:

1) FOR COMPLETE PROJECT CONTROL DATA, SEE THE SURVEY RECORDS ON FILE IN THE SURVEYS DEPARTMENT AT THE DISTRICT OFFICE.

2) BASIS OF BEARINGS AND COORDINATES:
THIS PROJECT IS BASED ON THE CALIFORNIA COORDINATE SYSTEM OF 1983, EPOCH(2004.69), ZONE 2, U.S. SURVEY FOOT. 2ND ORDER PROJECT CONTROL STATIONS WERE ESTABLISHED IN JANUARY 2012 ACCORDING TO CRITERIA SET FORTH BY THE MODIFIED CALTRANS 2ND ORDER CONTROL SURVEY SPECIFICATIONS.

THIS GPS STATIC SURVEY WAS CONSTRAINED TO "B" ORDER STATIONS:
HPGN D CA 03 KJ (PID-KS2044) PENTZ RM 2 (PID-DB7511)
TABLE MTN (PID-DH6528) AND WICKS (PID-KS1880)
THE VALUES REPRESENTED IN THIS SURVEY MEET THE ABOVE REFERENCED STANDARDS FOR 2ND ORDER HORIZONTAL REQUIREMENTS

SUBSEQUENT GPS AND CONVENTIONAL SURVEYS ESTABLISHED THE LISTED 2ND AND 3RD ORDER STATIONS

3) BASIS OF ELEVATIONS:
THIS PROJECT IS BASED ON THE NORTH AMERICAN VERTICAL DATUM OF 1988 (NAVD88), STATIONS AND RESPECTIVE ELEVATIONS CONSTRAINED TO ARE:
K 900 (PID-KS1181, ELEVATION 432.96')
STATIONS AND RESPECTIVE ELEVATIONS WERE ESTABLISHED WITH DIGITAL LEVELS

4) IN THE EVENT GPS MACHINE CONTROL/GUIDANCE IS USED FOR THIS PROJECT, THE CONTRACTOR SHALL CONTACT AND MEET WITH THE SURVEYS DEPARTMENT AT THE DISTRICT OFFICE TO OBTAIN THE CONTROL NECESSARY TO ESTABLISH A PROJECT CALIBRATION COMPATIBLE FOR ALL USERS.

ABBREVIATIONS:

CADT - CALIFORNIA DEPARTMENT OF TRANSPORTATION
PID - NATIONAL GEODETIC SURVEY PERMANENT IDENTIFIER
NAVD - NATIONAL AMERICAN VERTICAL DATUM
NAD - NATIONAL AMERICAN DATUM

CONTROL FOR DESIGN AND CONSTRUCTION

STATION DESIGNATION	ORDER	NORTHING	EASTING	ELEVATION	DESCRIPTION
BUT 70 23.73	2ND	2352982.076	6675337.049	454.75	CDOT BR DISK/CONC
BUT 70 23.97	2ND	2353848.708	6676263.066	453.19	CDOT BR DISK/CONC
BUT 70 24.32	2ND	2355293.124	6677489.994	492.81	CDOT BR DISK/CONC
BUT 70 24.45	2ND	2355847.866	6677778.349	493.56	CDOT BR DISK/CONC
CM 24.04	3RD	2354296.578	6676496.311	456.66	#6 REBAR/PUNCH
CM 24.15	3RD	2354610.873	6676784.299	458.01	#6 REBAR/PUNCH
CM 24.28	3RD	2355157.867	6677305.168	462.02	#6 REBAR/PUNCH

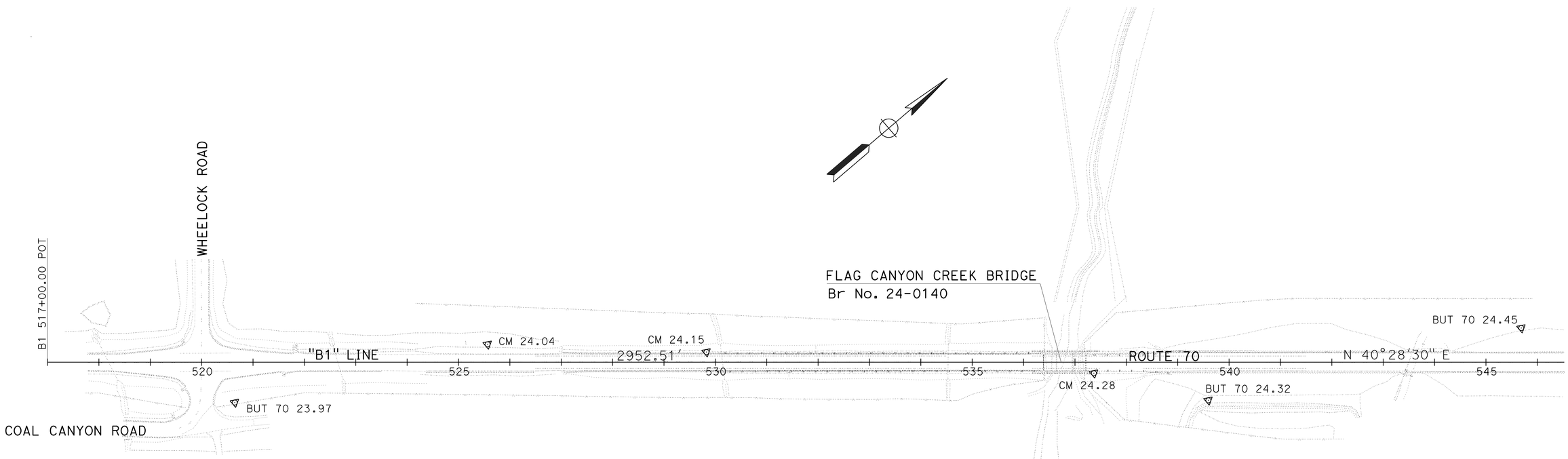

APPROVED FOR PROJECT CONTROL INFORMATION ONLY

PROJECT CONTROL

NO SCALE

PC-1

STATE OF CALIFORNIA - DEPARTMENT OF TRANSPORTATION
Caltrans® SURVEYS

FUNCTIONAL SUPERVISOR: MIKE MCCALLIGAN
CALCULATED-DESIGNED BY: JOHN CRAWFORD
CHECKED BY: MIKE McCALLIGAN
REVISED BY / DATE REVISED

LAST REVISION 07-24-14 | DATE PLOTTED => 20-OCT-2014 | TIME PLOTTED => 13:48

Dist	COUNTY	ROUTE	POST MILES TOTAL PROJECT	SHEET No.	TOTAL SHEETS
03	But	70	24.0/24.5	6	123

M. A. Panchesson 8-11-14
REGISTERED CIVIL ENGINEER DATE

8-11-14
PLANS APPROVAL DATE

REGISTERED PROFESSIONAL ENGINEER
M.A. PANCHESSON
No. 44125
Exp. 06-30-15
CIVIL
STATE OF CALIFORNIA

THE STATE OF CALIFORNIA OR ITS OFFICERS OR AGENTS SHALL NOT BE RESPONSIBLE FOR THE ACCURACY OR COMPLETENESS OF SCANNED COPIES OF THIS PLAN SHEET.

NOTES:

1. FOR ACCURATE RIGHT OF WAY DATA, CONTACT RIGHT OF WAY ENGINEERING AT THE DISTRICT OFFICE.
2. HORIZONTAL CONTROL FOR THIS PROJECT IS CALIFORNIA COORDINATE SYSTEM ZONE. GRID DISTANCES AND GRID BEARINGS SHOWN. TO OBTAIN GROUND DISTANCES, DIVIDE BY THE AVERAGE COMBINED GRID FACTOR OF 0.99995979.
3. THE HORIZONTAL DATUM USED IS NAD 1983 AND VERTICAL DATUM USED IS NAVD 1988.
4. SEE "CONSTRUCTION DETAILS" PLANS FOR FENCING INFORMATION.
5. SEE "SUMMARY OF QUANTITIES" PLANS FOR DIKE AND GUARDRAIL LOCATIONS.

ABBREVIATIONS

NAD - NATIONAL AMERICAN DATUM
NAVD - NATIONAL AMERICAN VERTICAL DATUM

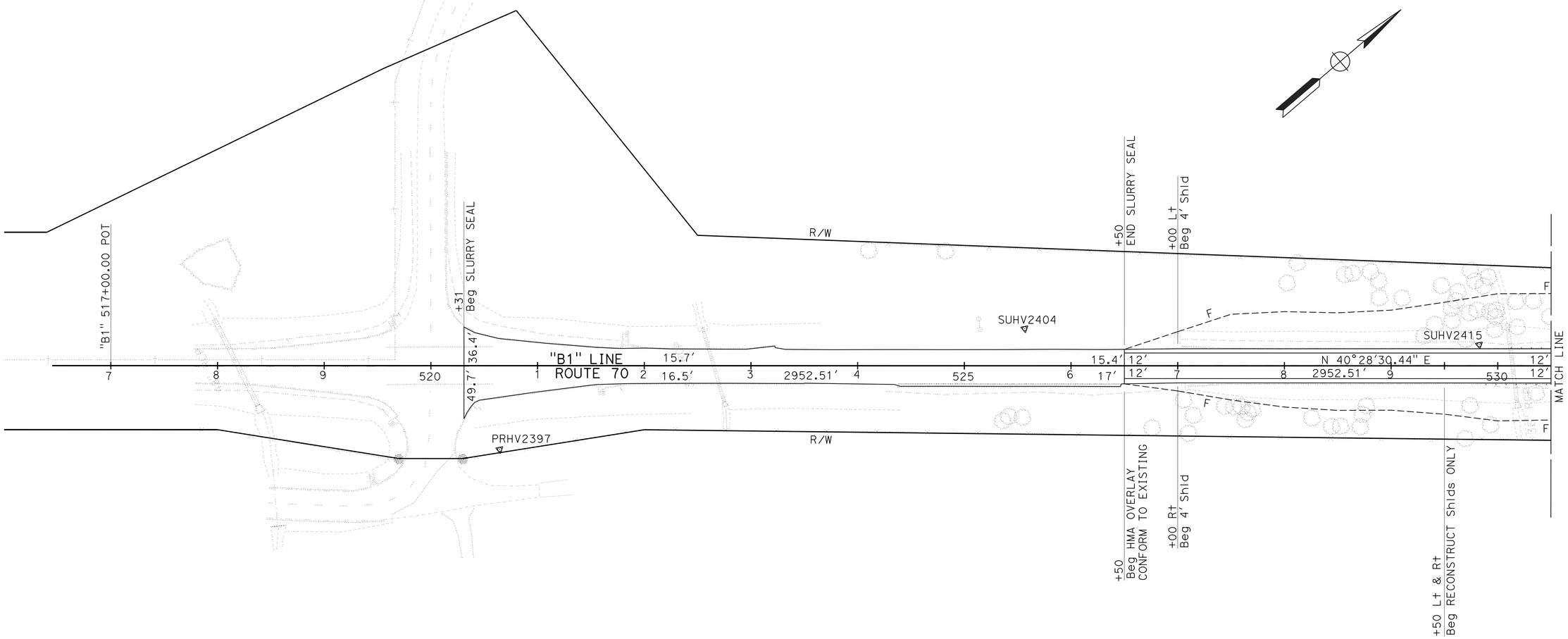

LAYOUT

SCALE: 1" = 50'

L-1

REVISED BY | DATE REVISED
MIKE PANCHESSON | DON WEHRLY
CALCULATED-DESIGNED BY | CHECKED BY
FUNCTIONAL SUPERVISOR: ALI KIANI

STATE OF CALIFORNIA - DEPARTMENT OF TRANSPORTATION
Caltrans
DESIGN

LAST REVISION 00-00-00 | DATE PLOTTED => 20-OCT-2014 | TIME PLOTTED => 13:48

Dist	COUNTY	ROUTE	POST MILES TOTAL PROJECT	SHEET No.	TOTAL SHEETS
03	But	70	24.0/24.5	7	123

M. A. Panchesson 8-11-14
REGISTERED CIVIL ENGINEER DATE

8-11-14
PLANS APPROVAL DATE

REGISTERED PROFESSIONAL ENGINEER M.A. PANCHESSON No. 44125 Exp. 06-30-15 CIVIL STATE OF CALIFORNIA

THE STATE OF CALIFORNIA OR ITS OFFICERS OR AGENTS SHALL NOT BE RESPONSIBLE FOR THE ACCURACY OR COMPLETENESS OF SCANNED COPIES OF THIS PLAN SHEET.

NOTES:

1. FOR ACCURATE RIGHT OF WAY DATA, CONTACT RIGHT OF WAY ENGINEERING AT THE DISTRICT OFFICE.

2. SEE "CONSTRUCTION DETAILS" AND "SUMMARY OF QUANTITIES" PLANS FOR FENCING, GR, MGS, AND DIKE LOCATIONS.

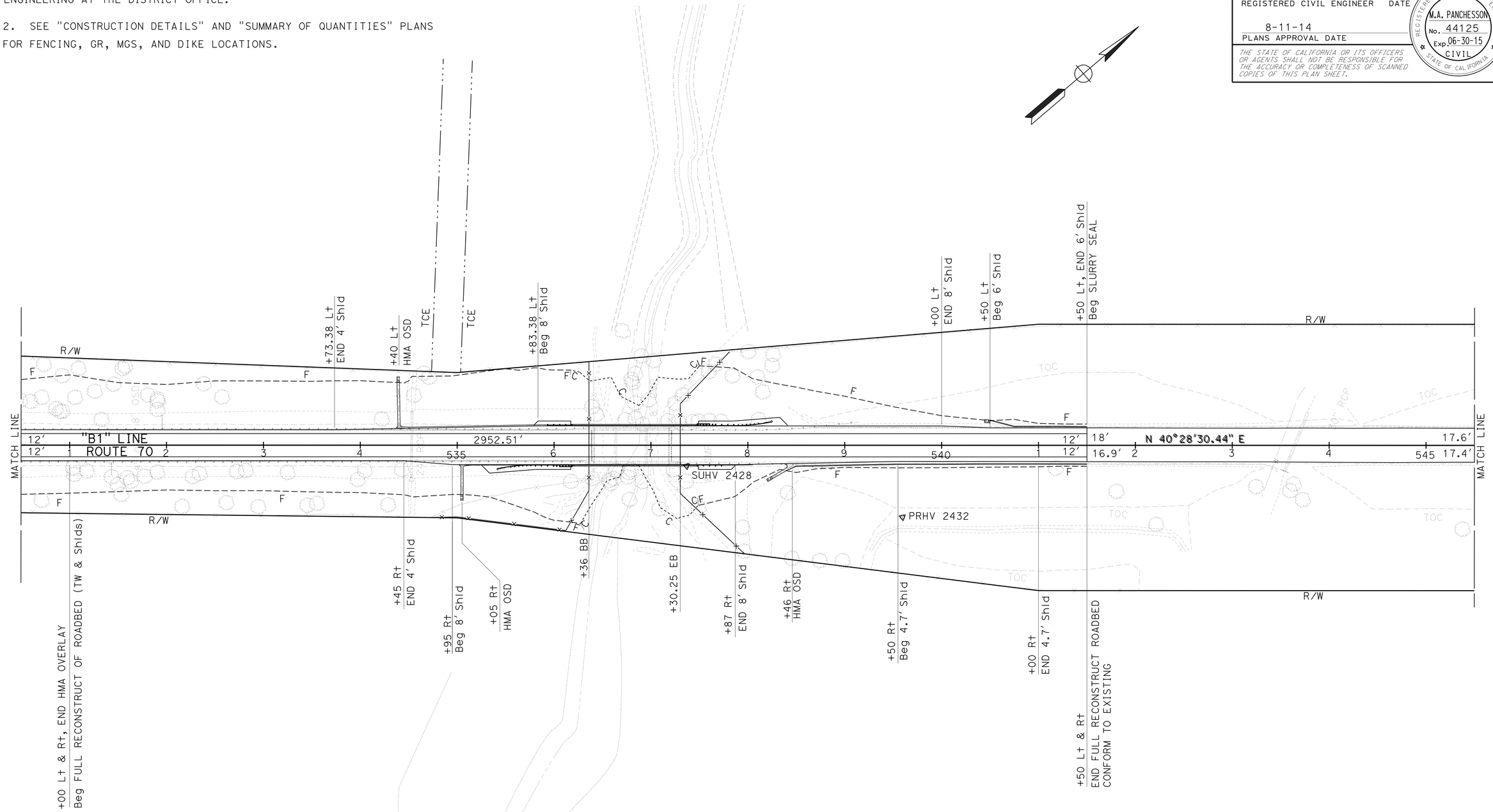

LAYOUT

SCALE: 1" = 50'

L-2

STATE OF CALIFORNIA - DEPARTMENT OF TRANSPORTATION

Caltrans

DESIGN

FUNCTIONAL SUPERVISOR: ALI KIANI

CALCULATED-DESIGNED BY: MIKE PANCHESSON

CHECKED BY: DON WEHRLY

REVISED BY

DATE REVISED

LAST REVISION 00-00-00

DATE PLOTTED => 20-OCT-2014

TIME PLOTTED => 13:48

Dist	COUNTY	ROUTE	POST MILES TOTAL PROJECT	SHEET No.	TOTAL SHEETS
03	But	70	24.0/24.5	8	123

M. A. Panchesson 8-11-14
REGISTERED CIVIL ENGINEER DATE

8-11-14
PLANS APPROVAL DATE

REGISTERED PROFESSIONAL ENGINEER
M.A. PANCHESSON
No. 44125
Exp. 06-30-15
CIVIL
STATE OF CALIFORNIA

THE STATE OF CALIFORNIA OR ITS OFFICERS OR AGENTS SHALL NOT BE RESPONSIBLE FOR THE ACCURACY OR COMPLETENESS OF SCANNED COPIES OF THIS PLAN SHEET.

NOTE: FOR ACCURATE RIGHT OF WAY DATA, CONTACT RIGHT OF WAY ENGINEERING AT THE DISTRICT OFFICE.

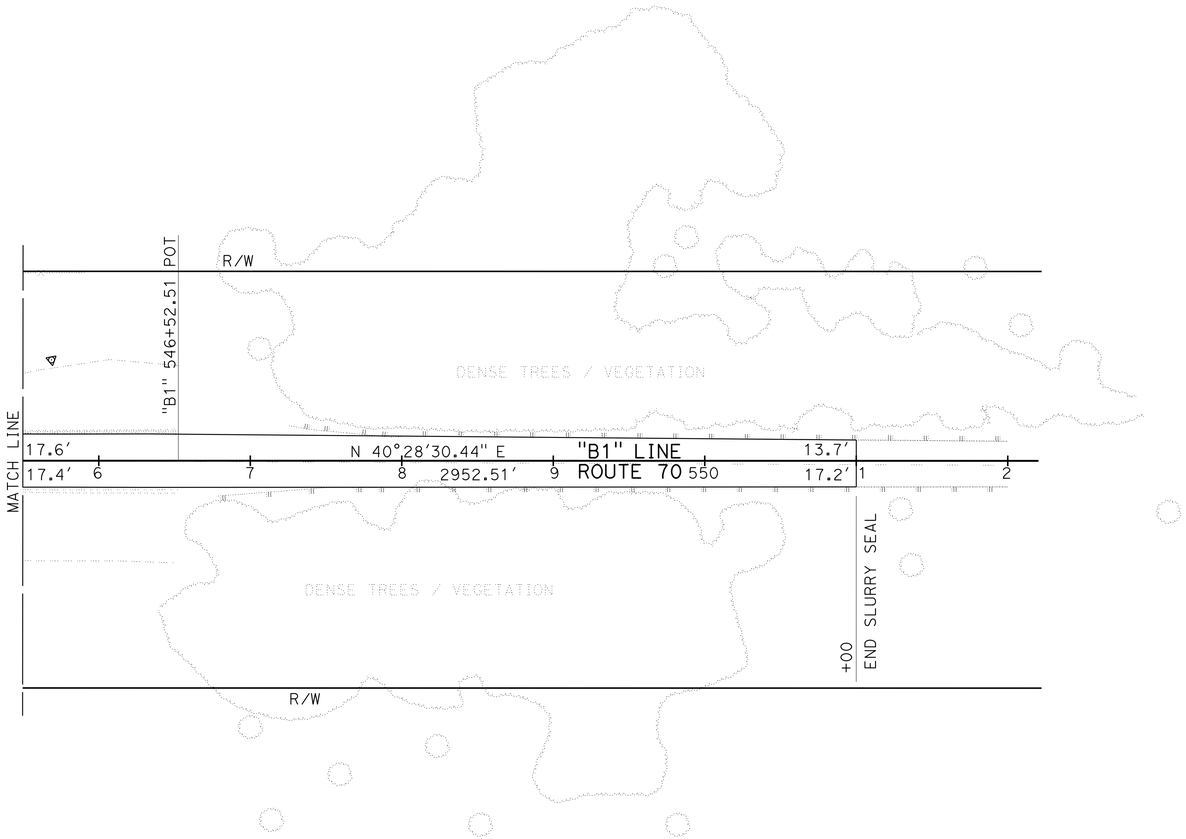

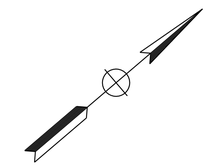

LAYOUT

SCALE: 1" = 50′

L-3

STATE OF CALIFORNIA - DEPARTMENT OF TRANSPORTATION
Caltrans®
DESIGN

FUNCTIONAL SUPERVISOR: ALI KIANI
CALCULATED-DESIGNED BY: MIKE PANCHESSON
CHECKED BY: DON WEHRLY
REVISED BY
DATE REVISED

LAST REVISION 00-00-00
DATE PLOTTED => 20-OCT-2014
TIME PLOTTED => 13:48

Dist	COUNTY	ROUTE	POST MILES TOTAL PROJECT	SHEET No.	TOTAL SHEETS
03	But	70	24.0/24.5	9	123

M. A. Panchesson 8-11-14
REGISTERED CIVIL ENGINEER DATE

8-11-14
PLANS APPROVAL DATE

REGISTERED PROFESSIONAL ENGINEER M.A. PANCHESSON No. 44125 Exp. 06-30-15 CIVIL STATE OF CALIFORNIA

THE STATE OF CALIFORNIA OR ITS OFFICERS OR AGENTS SHALL NOT BE RESPONSIBLE FOR THE ACCURACY OR COMPLETENESS OF SCANNED COPIES OF THIS PLAN SHEET.

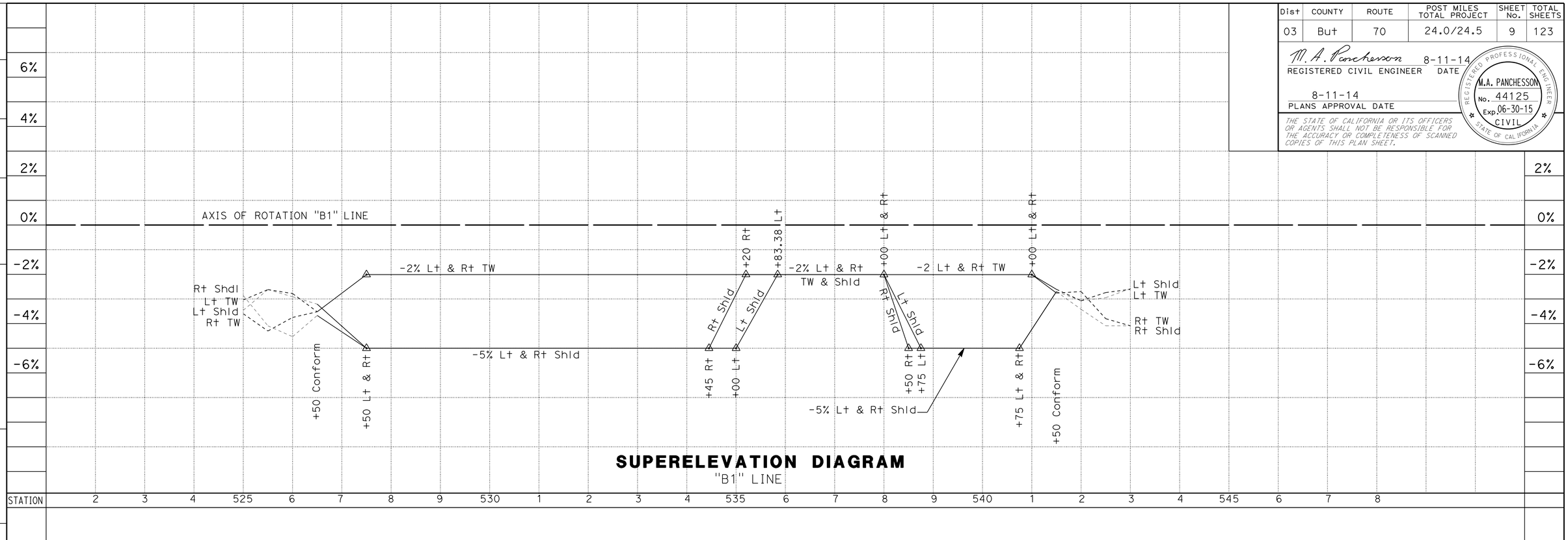

SUPERELEVATION DIAGRAM
"B1" LINE

NOTES:

1. THE HORIZONTAL DATUM USED IS NAD 1983 AND VERTICAL DATUM USED IS NAVD 1988.
2. PROFILE GRADE ON TOP OF THE HMA Pvm† SURFACE.
3. FOR OVERLAY WORK SEE "CONSTRUCTION DETAILS" AND "STAGE CONSTRUCTION" PLANS.

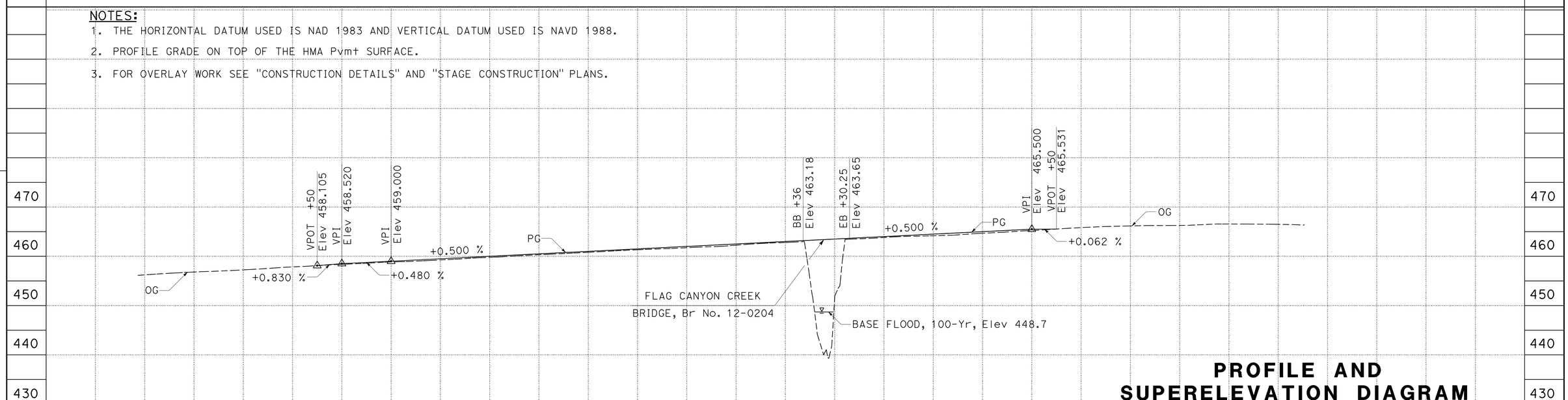

PROFILE
"B1" LINE

PROFILE AND SUPERELEVATION DIAGRAM

SCALE: Horiz 1" = 50'
Vert 1" = 5'

PS-1

CY	
Exc	SEE "SUMMARY OF QUANTITIES" PLANS
Emb	

STATE OF CALIFORNIA - DEPARTMENT OF TRANSPORTATION
Caltrans
DESIGN

FUNCTIONAL SUPERVISOR: ALI KIANI
CALCULATED-DESIGNED BY: D. HOPPER & D. WEHRLY
CHECKED BY: MIKE PANCHESSON
REVISED BY
DATE REVISED

LAST REVISION 00-00-00
DATE PLOTTED => 20-OCT-2014
TIME PLOTTED => 13:48

Dist	COUNTY	ROUTE	POST MILES TOTAL PROJECT	SHEET No.	TOTAL SHEETS
03	But	70	24.0/24.5	10	123

M. A. Panchesson 8-11-14
REGISTERED CIVIL ENGINEER DATE

8-11-14
PLANS APPROVAL DATE

REGISTERED PROFESSIONAL ENGINEER M.A. PANCHESSON No. 44125 Exp. 06-30-15 CIVIL STATE OF CALIFORNIA

THE STATE OF CALIFORNIA OR ITS OFFICERS OR AGENTS SHALL NOT BE RESPONSIBLE FOR THE ACCURACY OR COMPLETENESS OF SCANNED COPIES OF THIS PLAN SHEET.

NOTES:

1. ALL ESA FENCING SHALL HAVE AT LEAST ONE SIGN FACING THE Hwy.
2. SEE ELECTRICAL SHEETS REGARDING THE USE OF THE TCE.
3. FOR REMOVE FENCE (BW/WM) AND REMOVE Temp FENCING (BW), SEE "SUMMARY OF QUANTITIES" PLANS.
4. FOR PERMANENT FENCING, SEE "CONSTRUCTION DETAILS" , PLAN SHEET C-9.
3. ALL ELDERBERRY BUSHES TO BE FENCED WILL BE FIELD LOCATED BY A CALTRANS BIOLOGIST.

ESA FENCE SIGN DETAIL

(SEE NOTES)

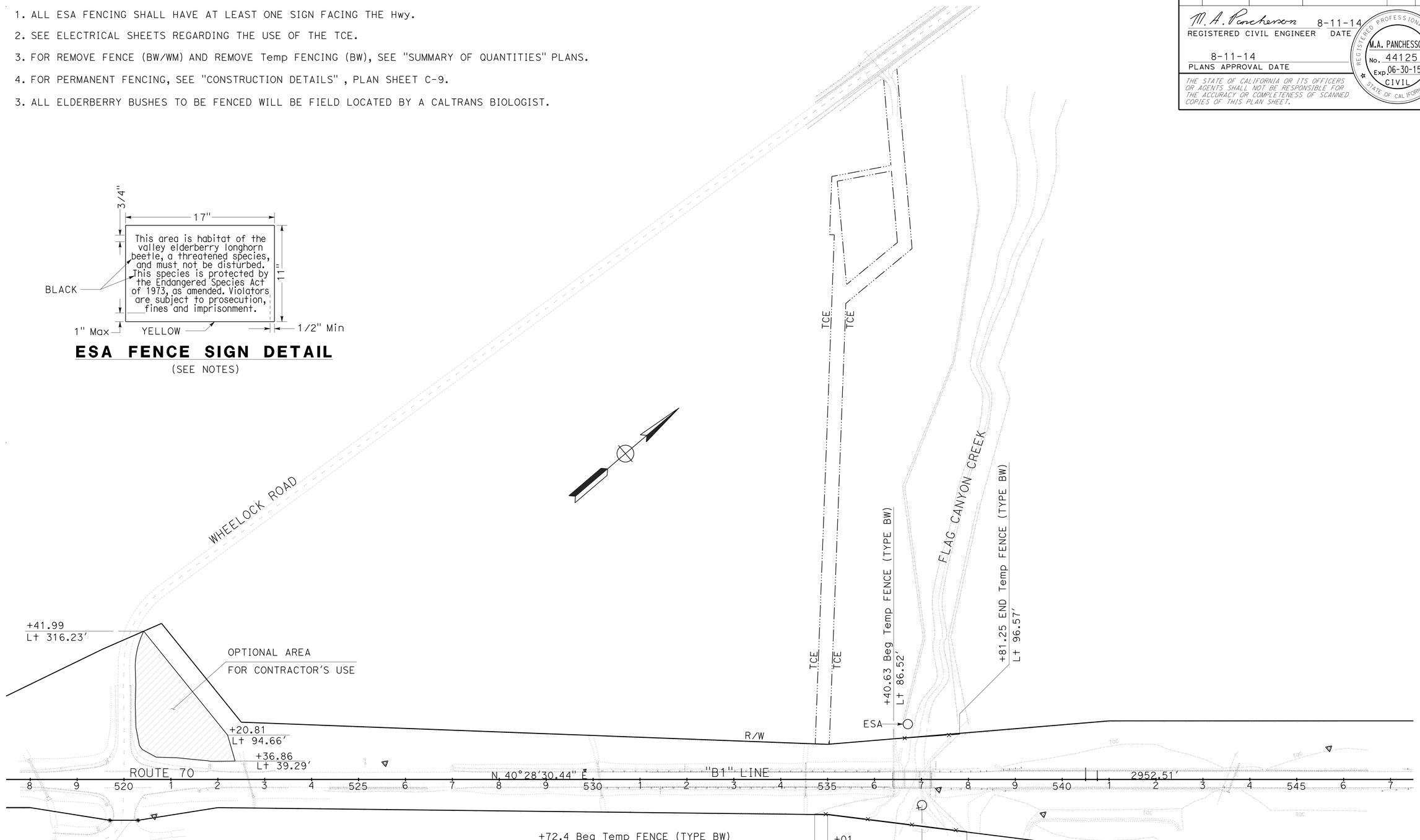

CONSTRUCTION DETAILS

SCALE: 1" = 100'

C-1

STATE OF CALIFORNIA - DEPARTMENT OF TRANSPORTATION
Caltrans
DESIGN
FUNCTIONAL SUPERVISOR: ALI KIANI
CALCULATED-DESIGNED BY: MIKE PANCHESSON
CHECKED BY: DON WEHRLY
REVISED BY
DATE REVISED

LAST REVISION 00-00-00
DATE PLOTTED => 20-OCT-2014
TIME PLOTTED => 13:48

Dist	COUNTY	ROUTE	POST MILES TOTAL PROJECT	SHEET No.	TOTAL SHEETS
03	But	70	24.0/24.5	11	123

M. A. Panchesson 8-11-14
REGISTERED CIVIL ENGINEER DATE

8-11-14
PLANS APPROVAL DATE

REGISTERED PROFESSIONAL ENGINEER M.A. PANCHESSON No. 44125 Exp. 06-30-15 CIVIL STATE OF CALIFORNIA

THE STATE OF CALIFORNIA OR ITS OFFICERS OR AGENTS SHALL NOT BE RESPONSIBLE FOR THE ACCURACY OR COMPLETENESS OF SCANNED COPIES OF THIS PLAN SHEET.

NOTE: FOR DETAILS OF Temp RAILING (TYPE K), SEE Std PLAN T3A.

LEGEND

COLD PLANE AC Pvmt

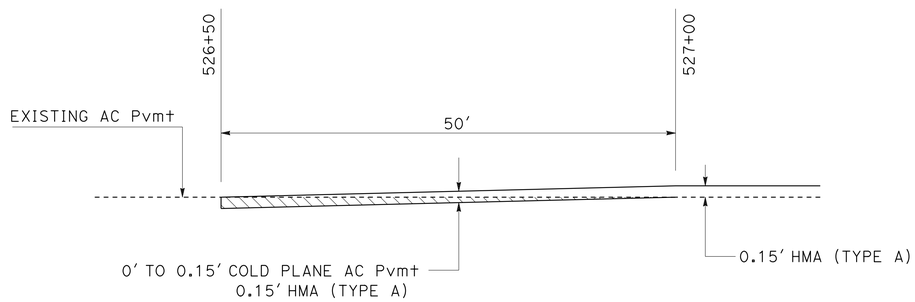

OVERLAY CONFORM DETAIL

"B1"-LINE
Rte 70

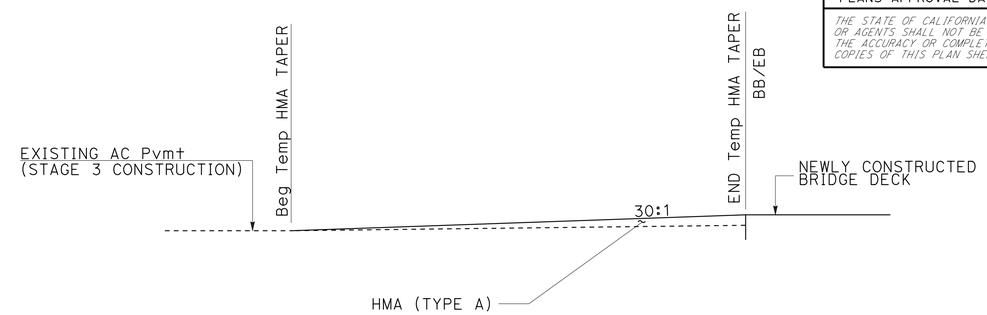

Temp HMA TAPER DETAIL

"B1"-LINE
Rte 70

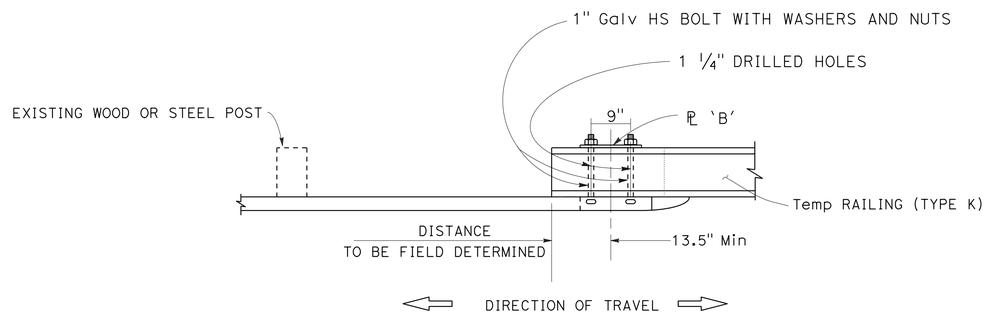

PLAN

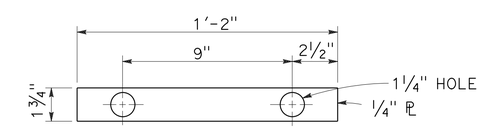

PLATE 'A'

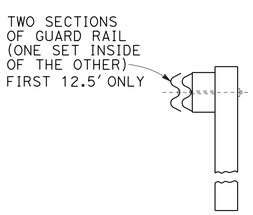

SECTION A-A

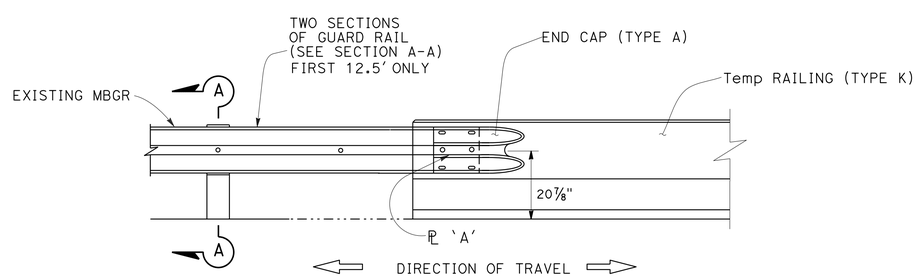

ELEVATION

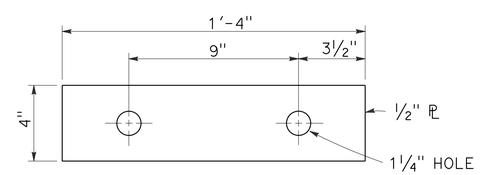

PLATE 'B'

CONNECTION DETAILS
TEMPORARY RAILING (TYPE K) - EXISTING MBGR

(SEE STAGE 3 CONSTRUCTION, SHEET SC-3)

CONSTRUCTION DETAILS

NO SCALE

C-2

STATE OF CALIFORNIA - DEPARTMENT OF TRANSPORTATION
Caltrans
DESIGN

FUNCTIONAL SUPERVISOR: ALI KIANI
CALCULATED-DESIGNED BY: MIKE PANCHESSON
CHECKED BY: DON WEHRLY
REVISED BY
DATE REVISED

LAST REVISION 00-00-00
DATE PLOTTED => 20-OCT-2014
TIME PLOTTED => 13:48

Dist	COUNTY	ROUTE	POST MILES TOTAL PROJECT	SHEET No.	TOTAL SHEETS
03	But	70	24.0/24.5	12	123

M. A. Panchesson 8-11-14
REGISTERED CIVIL ENGINEER DATE

8-11-14
PLANS APPROVAL DATE

REGISTERED PROFESSIONAL ENGINEER
M.A. PANCHESSON
No. 44125
Exp. 06-30-15
CIVIL
STATE OF CALIFORNIA

THE STATE OF CALIFORNIA OR ITS OFFICERS OR AGENTS SHALL NOT BE RESPONSIBLE FOR THE ACCURACY OR COMPLETENESS OF SCANNED COPIES OF THIS PLAN SHEET.

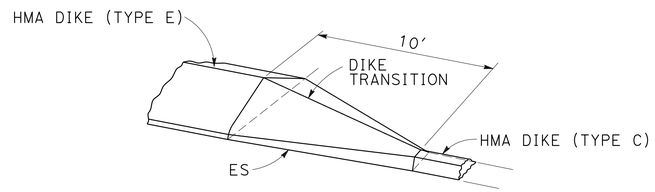

TYPE E

HMA DIKE (TYPE E) TO HMA DIKE (TYPE C)

TYPE C

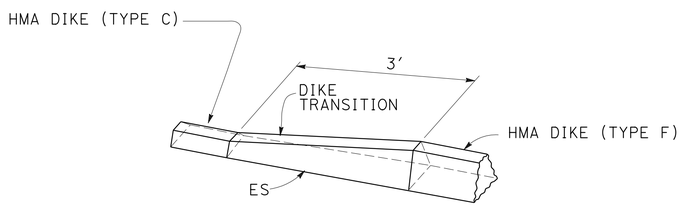

TYPE C

HMA DIKE (TYPE C) TO HMA DIKE (TYPE F)

TYPE F

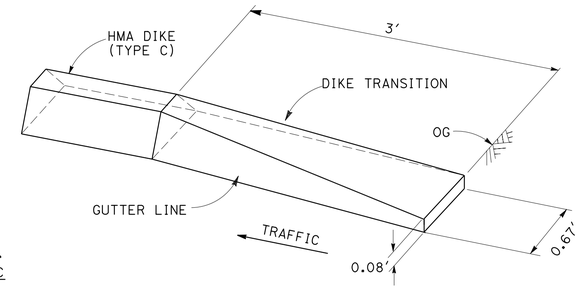

TYPE C

HMA DIKE (TYPE C) APPROACH TRANSITION

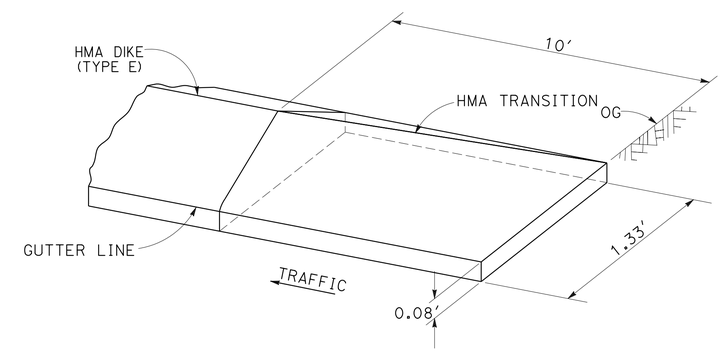

HMA DIKE (TYPE E) APPROACH TRANSITION

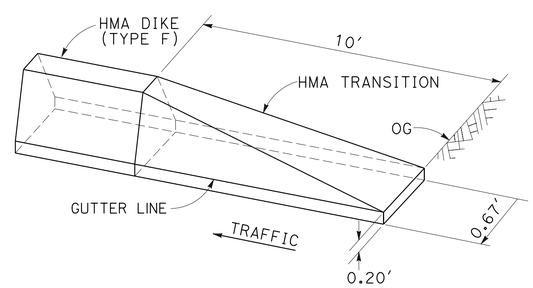

HMA DIKE (TYPE F) APPROACH TRANSITION

DIKE TRANSITIONS

CONSTRUCTION DETAILS

NO SCALE

C-3

REVISED BY	DATE REVISED
VACANT MIND	MIKE PANCHESSON
CALCULATED-DESIGNED BY	CHECKED BY
FUNCTIONAL SUPERVISOR	ALI KIANI

STATE OF CALIFORNIA - DEPARTMENT OF TRANSPORTATION
Caltrans
DESIGN

LAST REVISION 00-00-00 | DATE PLOTTED => 20-OCT-2014 | TIME PLOTTED => 13:48

Dist	COUNTY	ROUTE	POST MILES TOTAL PROJECT	SHEET No.	TOTAL SHEETS
03	But	70	24.0/24.5	13	123

M. A. Panchesson 8-11-14
REGISTERED CIVIL ENGINEER DATE

8-11-14
PLANS APPROVAL DATE

REGISTERED PROFESSIONAL ENGINEER M.A. PANCHESSON No. 44125 Exp. 06-30-15 CIVIL STATE OF CALIFORNIA

THE STATE OF CALIFORNIA OR ITS OFFICERS OR AGENTS SHALL NOT BE RESPONSIBLE FOR THE ACCURACY OR COMPLETENESS OF SCANNED COPIES OF THIS PLAN SHEET.

NOTES:
1. SEE SHEET C-5 FOR VERTICAL ALIGNMENT DATA FOR "A1" AND "A2" LINES.
2. ABUTMENT ALIGNMENTS "A1" AND "A2" LINES FOR EARTHWORK PURPOSES ONLY.
3. SEE STRUCTURE PLANS FOR CONSTRUCTION INFORMATION OF ABUTMENTS.

CURVE DATA

No. ⊕	R	Δ	T	L
1	5.00′	90°00′00.00"	5.00′	7.85′
2	5.00′	90°00′00.00"	5.00′	7.85′
3	5.00′	90°00′00.00"	5.00′	7.85′
4	5.00′	90°00′00.00"	5.00′	7.85′

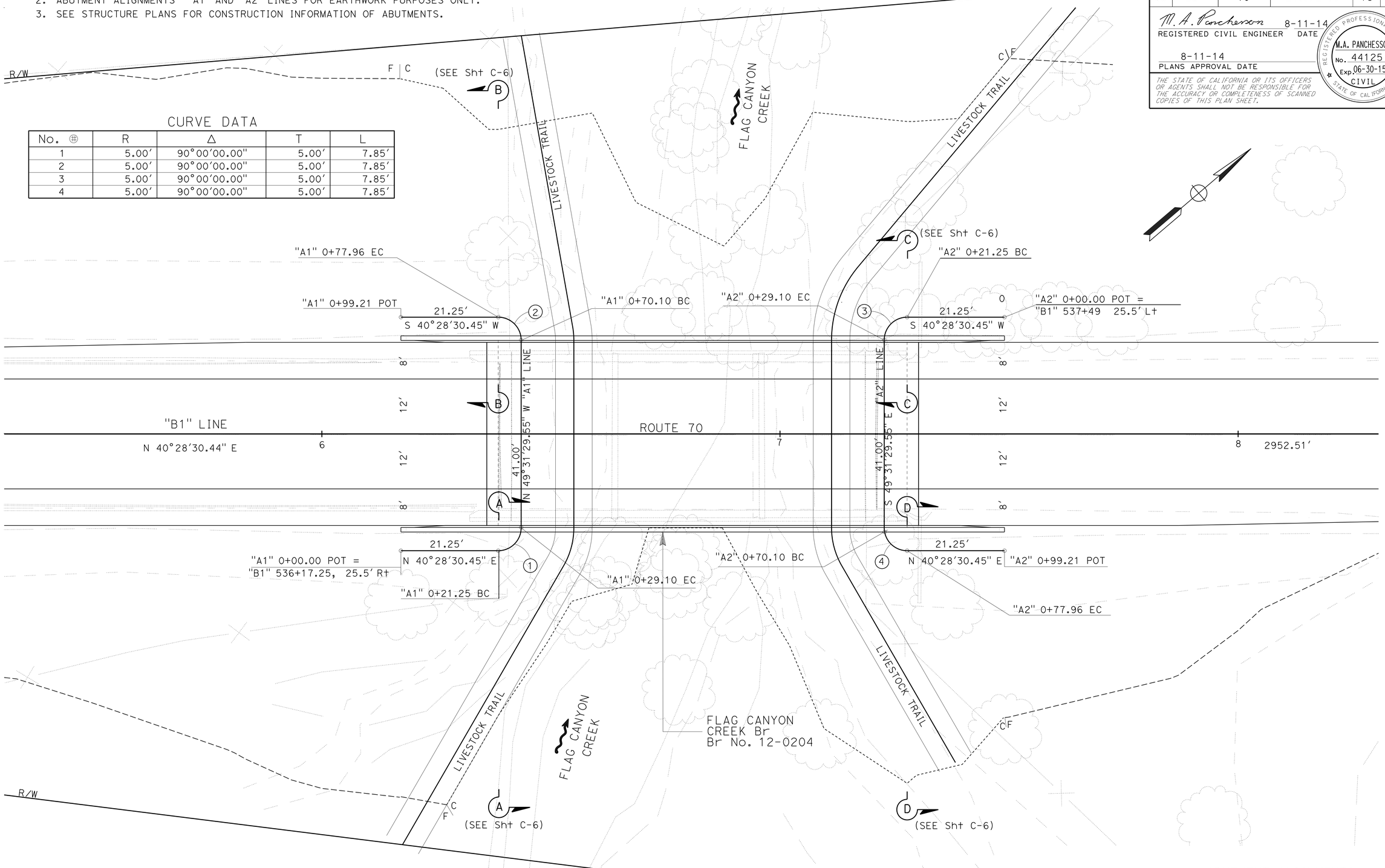

ABUTMENT ALIGNMENTS

CONSTRUCTION DETAILS

SCALE: 1"=10′

C-4

STATE OF CALIFORNIA - DEPARTMENT OF TRANSPORTATION
Caltrans®
DESIGN

FUNCTIONAL SUPERVISOR: ALI KIANI
CALCULATED-DESIGNED BY: DAVID HOPPER
CHECKED BY: DON WEHRLY
REVISED BY
DATE REVISED

LAST REVISION 00-00-00
DATE PLOTTED => 20-OCT-2014
TIME PLOTTED => 13:48

Dist	COUNTY	ROUTE	POST MILES TOTAL PROJECT	SHEET No.	TOTAL SHEETS
03	But	70	24.0/24.5	14	123

M. A. Panchesson 8-11-14
REGISTERED CIVIL ENGINEER DATE

8-11-14
PLANS APPROVAL DATE

REGISTERED PROFESSIONAL ENGINEER
M.A. PANCHESSON
No. 44125
Exp. 06-30-15
CIVIL
STATE OF CALIFORNIA

THE STATE OF CALIFORNIA OR ITS OFFICERS OR AGENTS SHALL NOT BE RESPONSIBLE FOR THE ACCURACY OR COMPLETENESS OF SCANNED COPIES OF THIS PLAN SHEET.

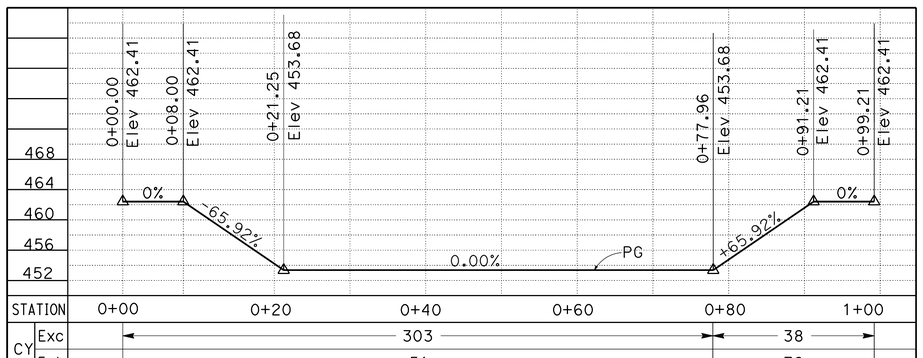

PROFILE "A1" LINE ABUTMENT 1

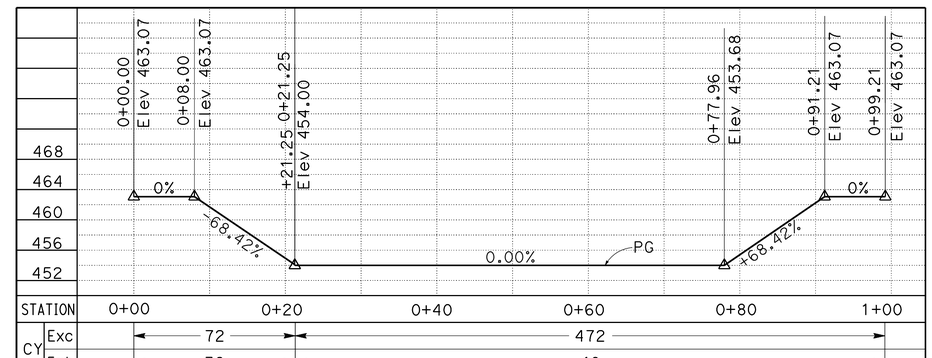

PROFILE "A2" LINE ABUTMENT 2

ABUTMENT ALIGNMENTS

CONSTRUCTION DETAILS

SCALE: HORIZ 1"=10'
VERT 1"=10'

C-5

STATE OF CALIFORNIA - DEPARTMENT OF TRANSPORTATION
Caltrans
DESIGN

FUNCTIONAL SUPERVISOR: ALI KIANI

CALCULATED-DESIGNED BY: DAVID HOPPER
CHECKED BY: DON WEHRLY

REVISED BY
DATE REVISED

LAST REVISION 00-00-00
DATE PLOTTED => 20-OCT-2014
TIME PLOTTED => 13:48

NOTE: SEE SHEET C-4 FOR SECTION LOCATIONS.

Dist	COUNTY	ROUTE	POST MILES TOTAL PROJECT	SHEET No.	TOTAL SHEETS
03	But	70	24.0/24.5	15	123

M. A. Panchesson 8-11-14
REGISTERED CIVIL ENGINEER DATE

8-11-14
PLANS APPROVAL DATE

REGISTERED PROFESSIONAL ENGINEER M.A. PANCHESSON No. 44125 Exp. 06-30-15 CIVIL STATE OF CALIFORNIA

THE STATE OF CALIFORNIA OR ITS OFFICERS OR AGENTS SHALL NOT BE RESPONSIBLE FOR THE ACCURACY OR COMPLETENESS OF SCANNED COPIES OF THIS PLAN SHEET.

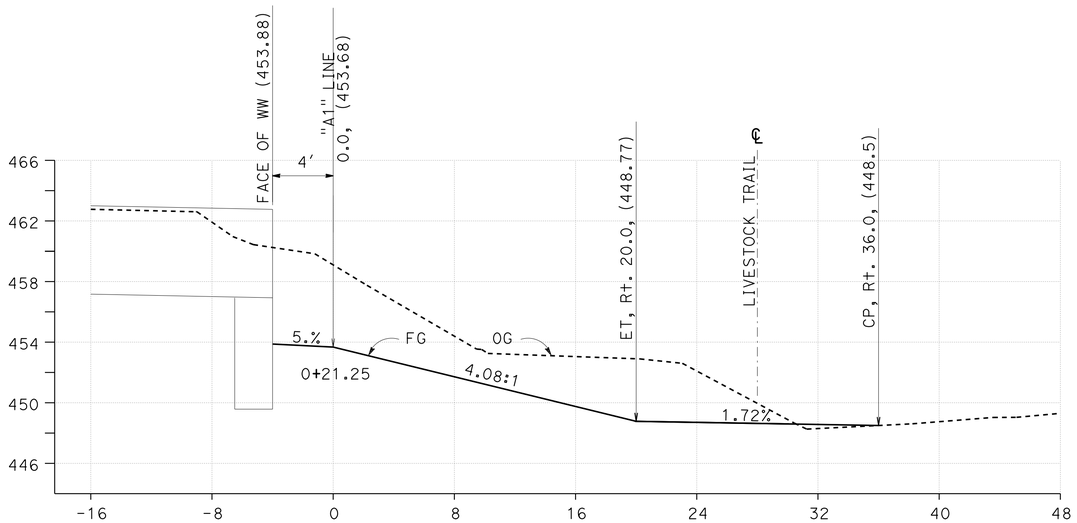

SECTION A-A
"A1" 0+21.25

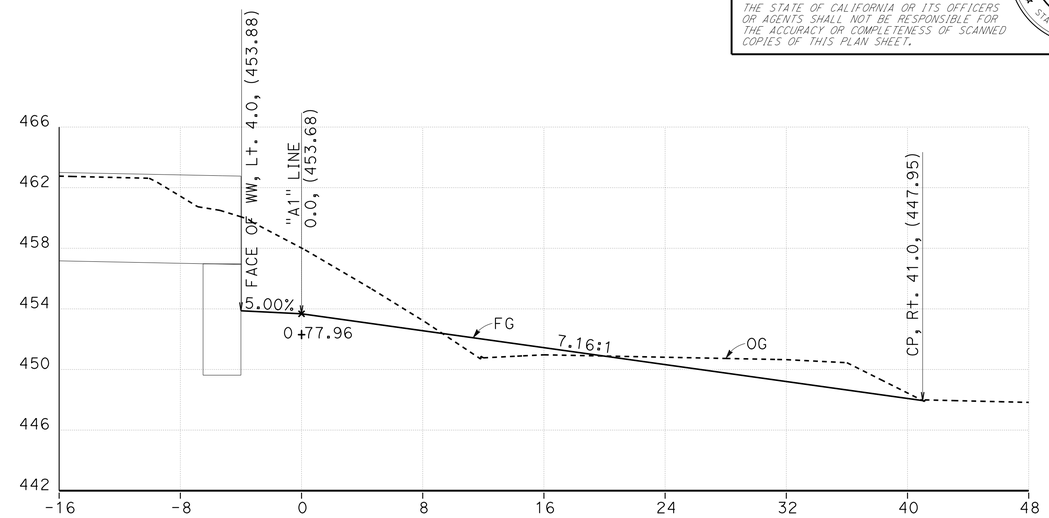

SECTION B-B
"A1" 0+77.96

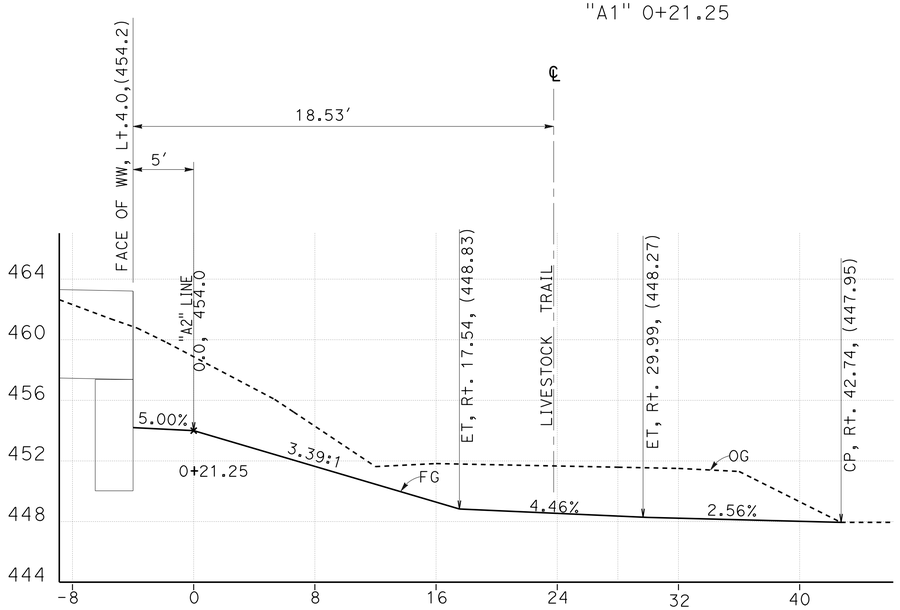

SECTION C-C
"A2" 0+21.25

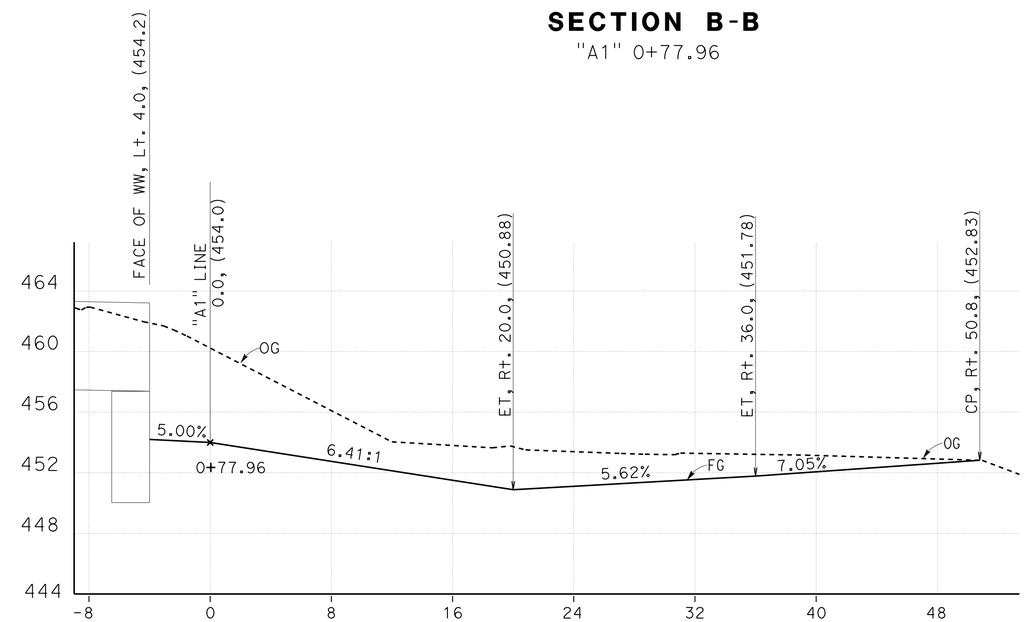

SECTION D-D
"A2" 0+77.96

SECTIONS
CONSTRUCTION DETAILS
SCALE: 1" = 5'

C-6

STATE OF CALIFORNIA - DEPARTMENT OF TRANSPORTATION
Caltrans®
DESIGN

FUNCTIONAL SUPERVISOR: ALI KIANI
CALCULATED-DESIGNED BY: DAVID HOPPER
CHECKED BY: DON WEHRLY
REVISED BY
DATE REVISED

LAST REVISION 00-00-00
DATE PLOTTED => 20-OCT-2014
TIME PLOTTED => 13:48

Dist	COUNTY	ROUTE	POST MILES TOTAL PROJECT	SHEET No.	TOTAL SHEETS
03	But	70	24.0/24.5	16	123

M. A. Panchesson 8-11-14
REGISTERED CIVIL ENGINEER DATE

8-11-14
PLANS APPROVAL DATE

REGISTERED PROFESSIONAL ENGINEER M.A. PANCHESSON No. 44125 Exp. 06-30-15 CIVIL STATE OF CALIFORNIA

THE STATE OF CALIFORNIA OR ITS OFFICERS OR AGENTS SHALL NOT BE RESPONSIBLE FOR THE ACCURACY OR COMPLETENESS OF SCANNED COPIES OF THIS PLAN SHEET.

NOTE: SEE SHEET C-4 FOR ABUTMENT ALIGNMENT LOCATIONS.

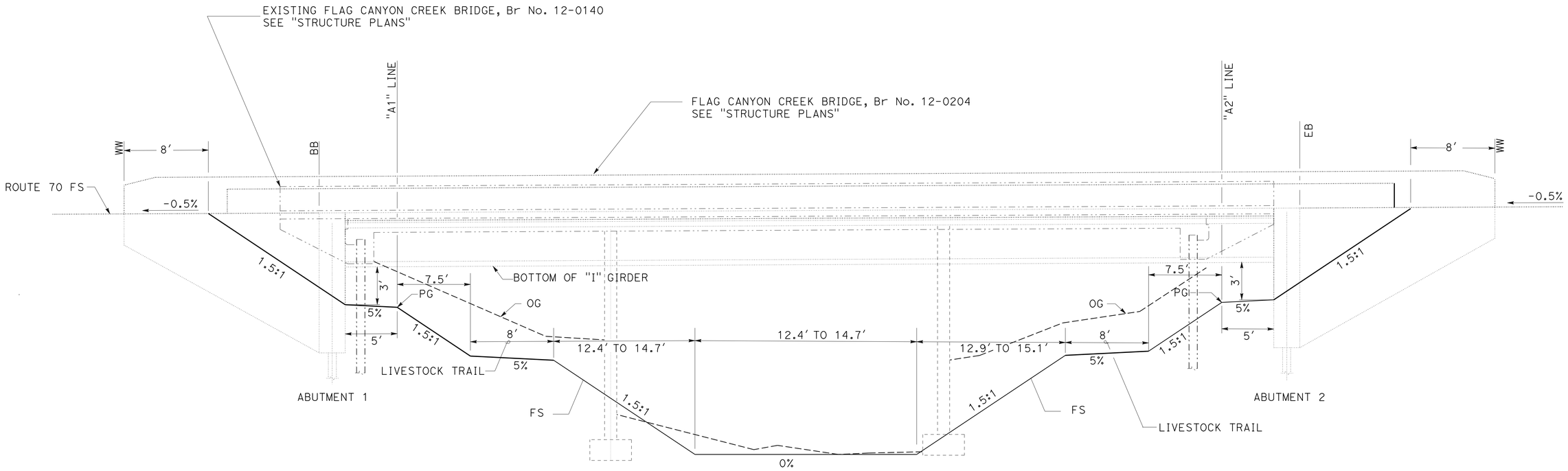

"A1" 0+29.10 TO "A1" 0+70.10
"A2" 0+29.10 TO "A2" 0+70.10

TYPICAL SECTION

GRADING TYPICAL SECTION UNDER BRIDGE

CONSTRUCTION DETAILS

SCALE: 1" = 5'

C-7

STATE OF CALIFORNIA - DEPARTMENT OF TRANSPORTATION
DESIGN
Caltrans
FUNCTIONAL SUPERVISOR: ALI KIANI
CALCULATED-DESIGNED BY: MIKE PANCHESSON
CHECKED BY: DON WEHRLY
REVISED BY
DATE REVISED

LAST REVISION 00-00-00
DATE PLOTTED => 20-OCT-2014
TIME PLOTTED => 13:48

Dist	COUNTY	ROUTE	POST MILES TOTAL PROJECT	SHEET No.	TOTAL SHEETS
03	But	70	24.0/24.5	17	123

M. A. Panchesson 8-11-14
REGISTERED CIVIL ENGINEER DATE

8-11-14
PLANS APPROVAL DATE

REGISTERED PROFESSIONAL ENGINEER M.A. PANCHESSON No. 44125 Exp. 06-30-15 CIVIL STATE OF CALIFORNIA

THE STATE OF CALIFORNIA OR ITS OFFICERS OR AGENTS SHALL NOT BE RESPONSIBLE FOR THE ACCURACY OR COMPLETENESS OF SCANNED COPIES OF THIS PLAN SHEET.

NOTES:

1. FOR REMOVE FENCE (BW/WM) AND REMOVE Temp FENCING (BW), SEE "SUMMARY OF QUANTITIES" PLANS.
2. FOR TEMPORARY FENCING, SEE "CONSTRUCTION DETAILS" , PLAN SHEET C-1.
3. PREVENT LIVESTOCK FROM ESCAPING DURING FENCE CONSTRUCTION.

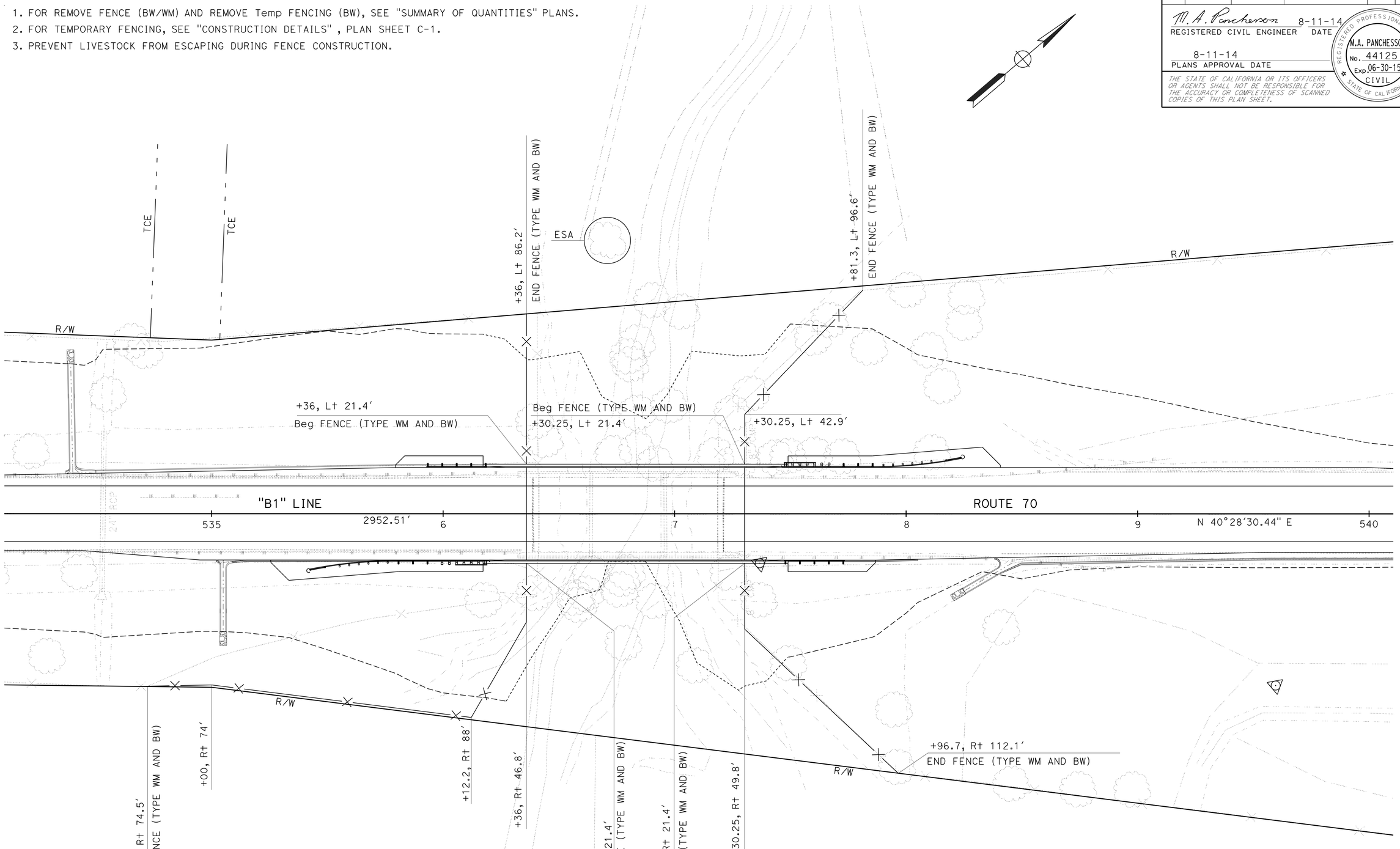

PERMANENT FENCING

CONSTRUCTION DETAILS

SCALE: 1" = 20′

C-8

STATE OF CALIFORNIA - DEPARTMENT OF TRANSPORTATION
Caltrans® DESIGN

FUNCTIONAL SUPERVISOR: ALI KIANI
CALCULATED-DESIGNED BY: MIKE PANCHESSON
CHECKED BY: DON WEHRLY
REVISED BY
DATE REVISED

LAST REVISION 00-00-00
DATE PLOTTED => 20-OCT-2014
TIME PLOTTED => 13:49

Dist	COUNTY	ROUTE	POST MILES TOTAL PROJECT	SHEET No.	TOTAL SHEETS
03	But	70	24.0/24.5	18	123

M. A. Panchesson 8-11-14
REGISTERED CIVIL ENGINEER DATE

8-11-14
PLANS APPROVAL DATE

REGISTERED PROFESSIONAL ENGINEER M.A. PANCHESSON No. 44125 Exp. 06-30-15 CIVIL STATE OF CALIFORNIA

THE STATE OF CALIFORNIA OR ITS OFFICERS OR AGENTS SHALL NOT BE RESPONSIBLE FOR THE ACCURACY OR COMPLETENESS OF SCANNED COPIES OF THIS PLAN SHEET.

NOTES:

1. FOR OSD WITH MOUNTABLE DIKE, SEE Std PLAN Sht D87D.
2. HMA DIKE AND OVERSIDE DRAINS TO BE CONSTRUCTED USING "MINOR HOT MIX ASPHALT".

ABBREVIATIONS

OSD - OVERSIDE DRAIN

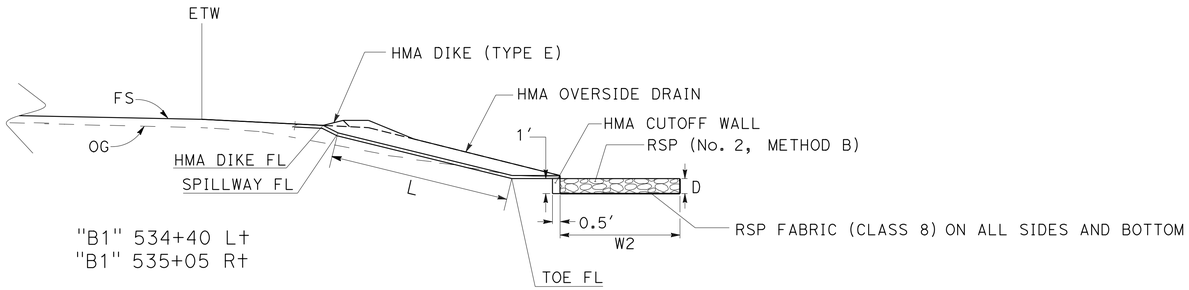

PROFILE VIEW

HMA OVERSIDE DRAIN

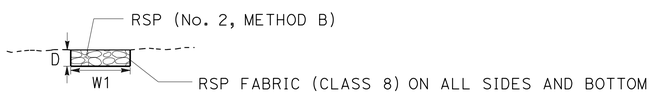

SECTION A-A

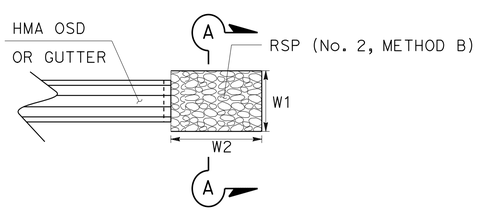

PLAN VIEW

ROCK ENERGY DISSIPATOR

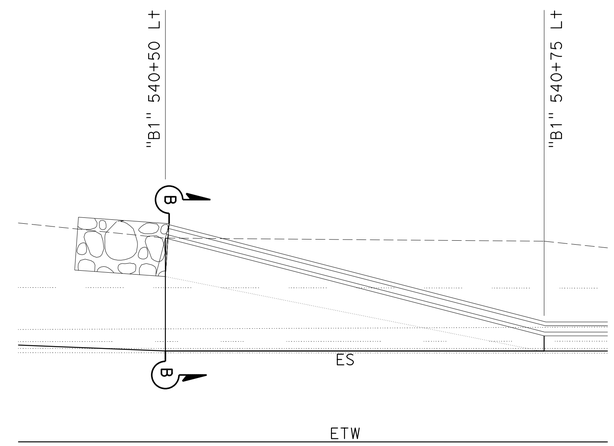

PLAN VIEW

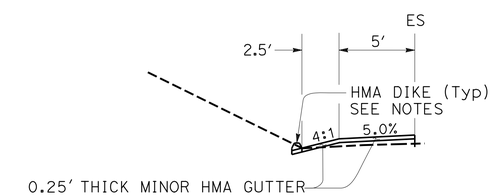

SECTION B-B

MINOR HMA GUTTER FLARE

TABLE A - GUTTER FLARE AND OSD

LOCATION	MINOR HMA GUTTER FLARE	MINOR HMA OSD (L)	RSP (No. 2, METHOD B)				RSP FABRIC
			(W1)	(W2)	(D)	(Vol)	(AREA)
	LF	LF	LF	LF	LF	CY	SQYD
"B1" 534+40 Lt		48.2	3	6	1	0.67	4.5
"B1" 535+05 Rt		31.75	3	6	1	0.67	4.5
"B1" 538+25.1, Rt 33.3' TO "B1" 538+45.85, Rt 21.25'		27.84	3	6	1	0.67	4.5
"B1" 540+50, Lt 25.45' TO "B1" 540+75, Lt 19'	26		3.5	6	1	0.78	4.9
					SHEET TOTAL	2.79 *	18.4 *

* SEE "SUMMARY OF QUANTITIES" PLANS FOR TOTALS.

OSD AND GUTTER

CONSTRUCTION DETAILS

NO SCALE

C-9

STATE OF CALIFORNIA - DEPARTMENT OF TRANSPORTATION
Caltrans
DESIGN
FUNCTIONAL SUPERVISOR: ALI KIANI
CALCULATED-DESIGNED BY: MIKE PANCHESSON
CHECKED BY: DON WEHRLY
REVISED BY
DATE REVISED

LAST REVISION 00-00-00
DATE PLOTTED => 20-OCT-2014
TIME PLOTTED => 13:49

Dist	COUNTY	ROUTE	POST MILES TOTAL PROJECT	SHEET No.	TOTAL SHEETS
03	But	70	24.0/24.5	19	123

REGISTERED CIVIL ENGINEER 8-11-14 DATE

8-11-14
PLANS APPROVAL DATE

REGISTERED PROFESSIONAL ENGINEER
NASIM HASAN
No. 74083
Exp. 06/30/15
CIVIL
STATE OF CALIFORNIA

THE STATE OF CALIFORNIA OR ITS OFFICERS OR AGENTS SHALL NOT BE RESPONSIBLE FOR THE ACCURACY OR COMPLETENESS OF SCANNED COPIES OF THIS PLAN SHEET.

NOTES:

1. FOR ACCURATE RIGHT OF WAY DATA, CONTACT RIGHT OF WAY ENGINEERING AT THE DISTRICT OFFICE.
2. PROPERTY OWNER CUT & CAPPED 4" PVC IRRIGATION PIPELINE AT R/W FENCES NEAR Sta 534+53.06
3. 4" PVC ABANDONED IRRIGATION PIPELINE TO BE REMOVED FROM 76.77' Lt TO 74.45' Rt

LEGENDS:

ROCK SLOPE PROTECTION

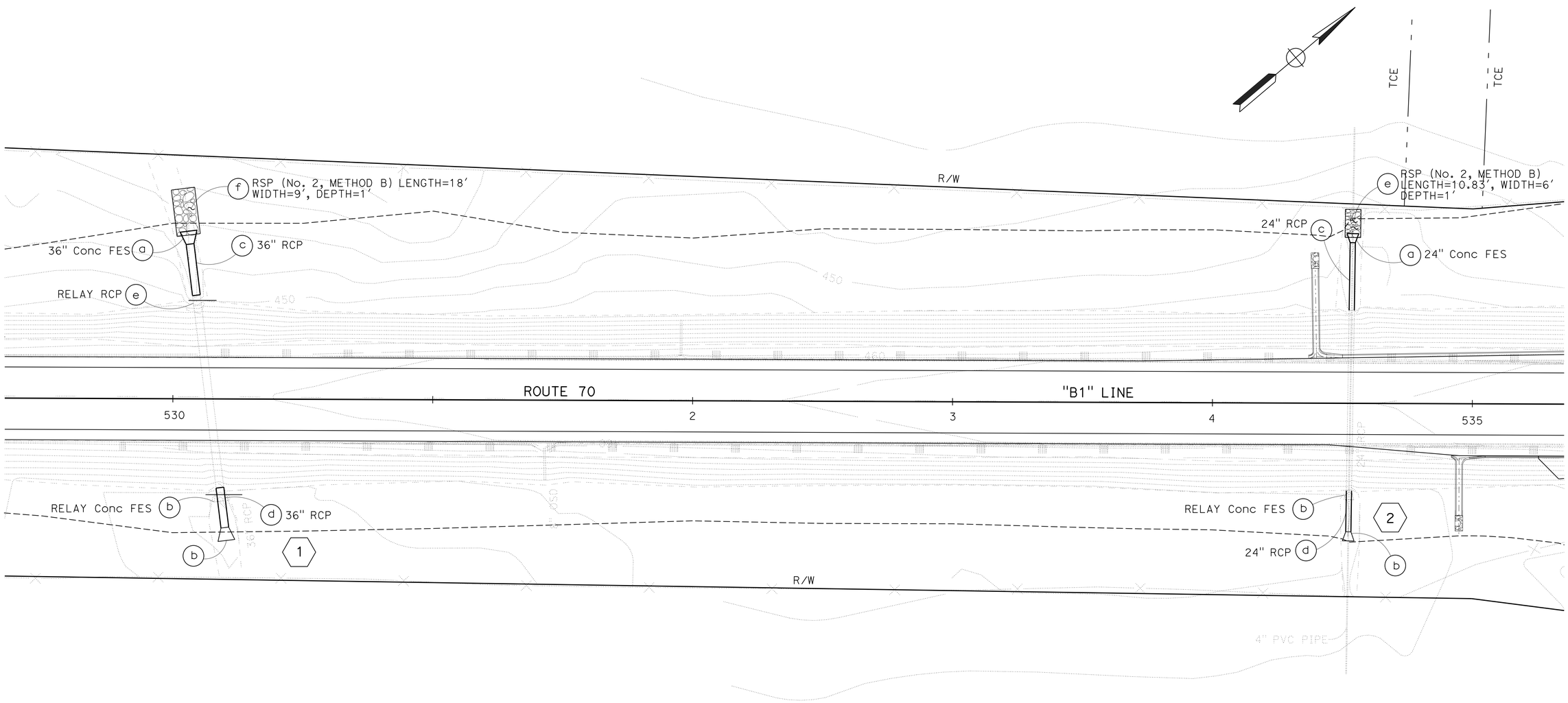

DRAINAGE PLAN

SCALE: 1"= 20'

D-1

APPROVED FOR DRAINAGE WORK ONLY

REVISED BY | DATE REVISED
NASIM HASAN | MIKE PANCHESSON
CALCULATED-DESIGNED BY | CHECKED BY
FUNCTIONAL SUPERVISOR
ALI KIANI

STATE OF CALIFORNIA - DEPARTMENT OF TRANSPORTATION
Caltrans
DESIGN

LAST REVISION 00-00-00
DATE PLOTTED => 20-OCT-2014
TIME PLOTTED => 13:49

Dist	COUNTY	ROUTE	POST MILES TOTAL PROJECT	SHEET No.	TOTAL SHEETS
03	But	70	24.0/24.5	20	123

REGISTERED CIVIL ENGINEER 8-11-14 DATE

8-11-14
PLANS APPROVAL DATE

REGISTERED PROFESSIONAL ENGINEER NASIM HASAN No. 74083 Exp 06/30/15 CIVIL STATE OF CALIFORNIA

THE STATE OF CALIFORNIA OR ITS OFFICERS OR AGENTS SHALL NOT BE RESPONSIBLE FOR THE ACCURACY OR COMPLETENESS OF SCANNED COPIES OF THIS PLAN SHEET.

NOTE:
MINIMUM OVERLAP LENGTH OF RSP FABRIC IS 12".

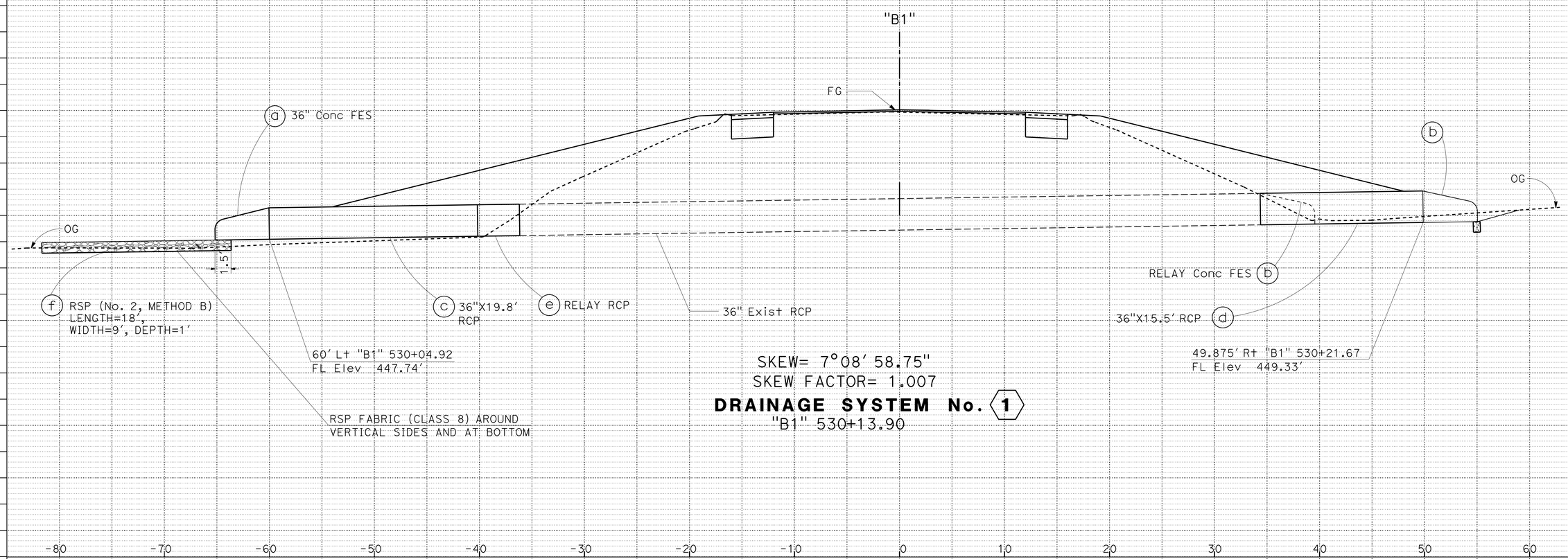

SKEW= 7°08' 58.75"
SKEW FACTOR= 1.007

DRAINAGE SYSTEM No. 1
"B1" 530+13.90

DRAINAGE PROFILES

SCALE: 1" = 5' Horiz
1" = 5' Vert

DP-1

STATE OF CALIFORNIA - DEPARTMENT OF TRANSPORTATION
Caltrans DESIGN

FUNCTIONAL SUPERVISOR: ALI KIANI
CALCULATED-DESIGNED BY: NASIM HASAN
CHECKED BY: MIKE PANCHESSON
REVISED BY
DATE REVISED

LAST REVISION 02-07-14
DATE PLOTTED => 20-OCT-2014
TIME PLOTTED => 13:49

Dist	COUNTY	ROUTE	POST MILES TOTAL PROJECT	SHEET No.	TOTAL SHEETS
03	But	70	24.0/24.5	21	123

REGISTERED CIVIL ENGINEER 8-11-14 DATE

8-11-14
PLANS APPROVAL DATE

REGISTERED PROFESSIONAL ENGINEER NASIM HASAN No. 74083 Exp. 06/30/15 CIVIL STATE OF CALIFORNIA

THE STATE OF CALIFORNIA OR ITS OFFICERS OR AGENTS SHALL NOT BE RESPONSIBLE FOR THE ACCURACY OR COMPLETENESS OF SCANNED COPIES OF THIS PLAN SHEET.

NOTES:

1. PROPERTY OWNER CUT & CAPPED 4" PVC IRRIGATION PIPELINE AT R/W FENCES.
2. 4" PVC PIPE TO BE REMOVED FROM 76.77' Lt TO 74.45' Rt.
2. DEPTH OF 4" PVC PIPE IS APPROXIMATE.

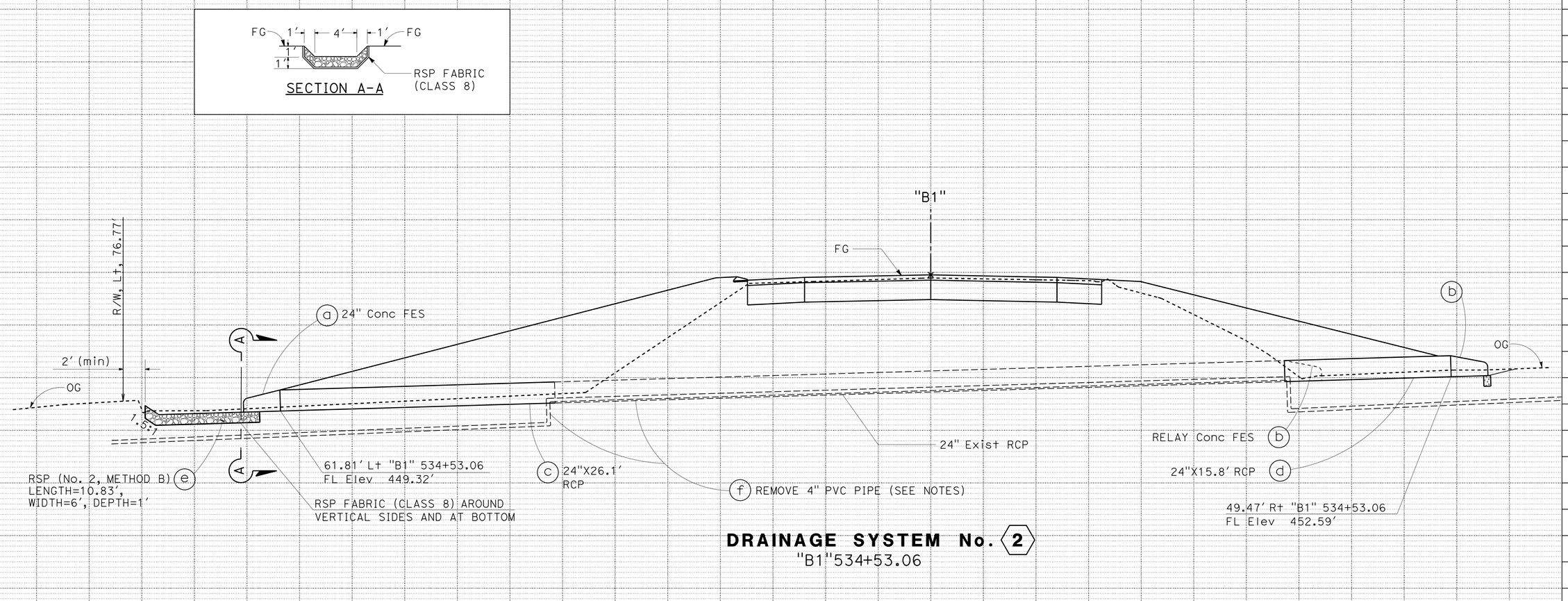

DRAINAGE SYSTEM No. 2
"B1"534+53.06

DRAINAGE PROFILES

SCALE: 1" = 5' Horiz
1" = 5' Vert

DP-2

STATE OF CALIFORNIA - DEPARTMENT OF TRANSPORTATION
Caltrans
DESIGN
FUNCTIONAL SUPERVISOR: ALI KIANI
CALCULATED-DESIGNED BY: NASIM HASAN
CHECKED BY: MIKE PANCHESSON
REVISED BY
DATE REVISED

LAST REVISION 02-07-14
DATE PLOTTED => 20-OCT-2014
TIME PLOTTED => 13:49

Dist	COUNTY	ROUTE	POST MILES TOTAL PROJECT	SHEET No.	TOTAL SHEETS
03	But	70	24.0/24.5	22	123

REGISTERED CIVIL ENGINEER 8-11-14 DATE

8-11-14
PLANS APPROVAL DATE

REGISTERED PROFESSIONAL ENGINEER NASIM HASAN No. 74083 Exp. 06/30/15 CIVIL STATE OF CALIFORNIA

THE STATE OF CALIFORNIA OR ITS OFFICERS OR AGENTS SHALL NOT BE RESPONSIBLE FOR THE ACCURACY OR COMPLETENESS OF SCANNED COPIES OF THIS PLAN SHEET.

DRAINAGE QUANTITIES

DRAINAGE PLAN SHEET No.	DRAINAGE SYSTEM No. (X)	DRAINAGE UNIT (⊗)	RELAY Conc FLARED END SECTION (EA)	STRUCTURE BACKFILL (N) (CY)	STRUCTURE EXCAVATION (CULVERT) (N) (CY)	RELAY REINFORCED CONCRETE PIPE (LF)	24" CONCRETE FLARED END SECTION (EA)	36" CONCRETE FLARED END SECTION (EA)	24" REINFORCED CONCRETE PIPE (LF)	36" REINFORCED CONCRETE PIPE (LF)	ROCK SLOPE PROTECTION (NO. 2, METHOD B) (CY)	ROCK SLOPE PROTECTION FABRIC (CLASS 8) (SQYD)	MARKER (CULVERT) (EA)	REMOVE PIPE (4" PVC) (LF)	DESCRIPTION	STATION	DRAINAGE PLAN SHEET No.	DRAINAGE SYSTEM No. (X)	DRAINAGE UNIT (⊗)
D-1	1	a						1							36" Conc FES	"B1" 530+06.20			a
		b	1												RELAY Conc FES	"B1" 530+21.67			b
		c								19.8					36" RCP	"B1" 530+07.52			c
		d								15.5					36" RCP	"B1" 530+19.24			d
		e				4									RELAY RCP	"B1" 530+09.20			e
		f									6.0				RSP	"B1" 530+05+07	D-1	1	f
												24.00			RSP FABRIC (CLASS 8)				
					37.59										STRUCTURAL EXCAVATION (CULVERT)				
				13.72											STRUCTURAL BACKFILL				
													2		MARKER (CULVERT)				
D-1	2	a					1								24" Conc FES				a
		b	1												RELAY Conc FES				b
		c							26.1						24" RCP				b
		d							15.8						24" RCP				d
		e									3.4				RSP	"B1" 534+53.06	D-1	2	e
		f												157.22	REMOVE 4" PVC PIPE				f
					40.77										STRUCTURAL EXCAVATION (CULVERT)				
				20.72											STRUCTURAL BACKFILL (N)				
													2		MARKER (CULVERT)				
												12.96			RSP FABRIC (CLASS 8)				
SUB-TOTAL				34.44	78.36														
TOTAL			2			4	1	1	41.9	35.3	9.41	36.96	4	157.22					

(N) - NOT A SEPARATE PAY ITEM, FOR INFORMATION ONLY

STATE OF CALIFORNIA - DEPARTMENT OF TRANSPORTATION
Caltrans
DESIGN

FUNCTIONAL SUPERVISOR: ALI KIANI
CALCULATED-DESIGNED BY: NASIM HASAN
CHECKED BY: MIKE PANCHESSON
REVISED BY
DATE REVISED

DRAINAGE QUANTITIES

DQ-1

LAST REVISION 00-00-00
DATE PLOTTED => 20-OCT-2014
TIME PLOTTED => 13:49

Dist	COUNTY	ROUTE	POST MILES TOTAL PROJECT	SHEET No.	TOTAL SHEETS
03	But	70	24.0/24.5	23	123

Kris M. Albers 8-11-14
REGISTERED CIVIL ENGINEER DATE

8-11-14
PLANS APPROVAL DATE

REGISTERED PROFESSIONAL ENGINEER
KRIS M. ALBERS
No. 49986
Exp. 6-30-15
CIVIL
STATE OF CALIFORNIA

THE STATE OF CALIFORNIA OR ITS OFFICERS OR AGENTS SHALL NOT BE RESPONSIBLE FOR THE ACCURACY OR COMPLETENESS OF SCANNED COPIES OF THIS PLAN SHEET.

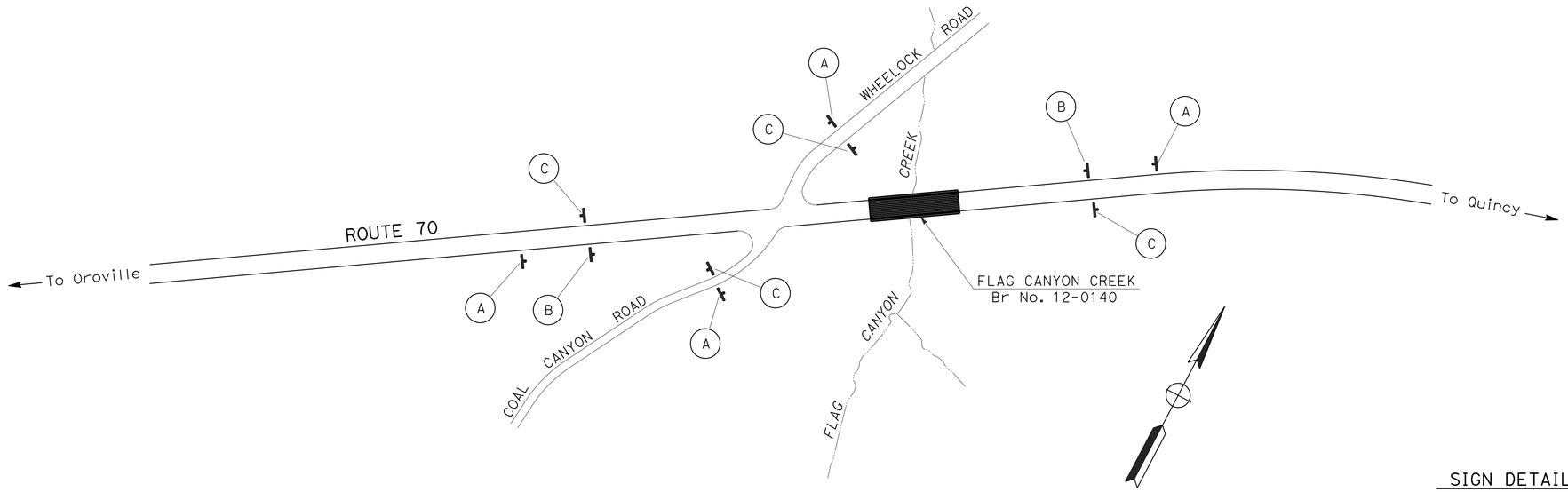

LEGEND

(X) CONSTRUCTION AREA SIGN LETTER

<CA> CALIFORNIA SIGN CODE

STATIONARY MOUNTED CONSTRUCTION AREA SIGNS

SIGN LETTER	SIGN CODE		PANEL SIZE	SIGN MESSAGE	NUMBER OF POST AND SIZE	NUMBER OF SIGNS
	FEDERAL	CALIFORNIA				
A	W20-1	C23	48" x 48"	ROAD WORK AHEAD	1 - 6" x 6"	4
B		C40(Mod)	48" x 36"	TRAFFIC FINES DOUBLED IN WORK ZONES	1 - 4" x 6"	2
C	G20-2	C14	36" x 18"	END ROAD WORK	1 - 4" x 4"	4

NOTES:

1. EXACT SIGN LOCATION TO BE DETERMINED BY THE ENGINEER.
2. FOR ADDITIONAL CONSTRUCTION AREA SIGNS, SEE TRAFFIC HANDLING PLANS AND MOTORIST INFORMATION PLANS.

SIGN DETAILS

(B) C40(Mod)<CA>

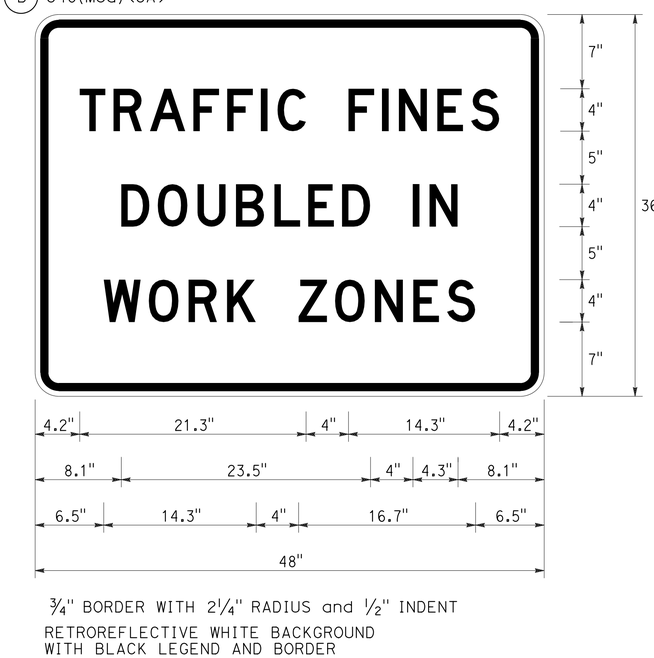

3/4" BORDER WITH 2 1/4" RADIUS and 1/2" INDENT

RETROREFLECTIVE WHITE BACKGROUND WITH BLACK LEGEND AND BORDER

"TRAFFIC FINES" D
"DOUBLED IN" D
"WORK ZONES" D

CONSTRUCTION AREA SIGNS

NO SCALE

CS-1

APPROVED FOR CONSTRUCTION AREA SIGN WORK ONLY

STATE OF CALIFORNIA - DEPARTMENT OF TRANSPORTATION
Caltrans
TRAFFIC

FUNCTIONAL SUPERVISOR: SERGIO ACEVES
CALCULATED-DESIGNED BY: JACK KEMMERLY
CHECKED BY: KRIS ALBERS
REVISED BY
DATE REVISED

LAST REVISION 07-28-14
DATE PLOTTED => 20-OCT-2014
TIME PLOTTED => 13:49

Dist	COUNTY	ROUTE	POST MILES TOTAL PROJECT	SHEET No.	TOTAL SHEETS
03	But	70	24.0/24.5	24	123

Kris M. Albers 8-11-14
REGISTERED CIVIL ENGINEER DATE

8-11-14
PLANS APPROVAL DATE

REGISTERED PROFESSIONAL ENGINEER
KRIS M. ALBERS
No. 49986
Exp. 6-30-15
CIVIL
STATE OF CALIFORNIA

THE STATE OF CALIFORNIA OR ITS OFFICERS OR AGENTS SHALL NOT BE RESPONSIBLE FOR THE ACCURACY OR COMPLETENESS OF SCANNED COPIES OF THIS PLAN SHEET.

NOTES:

1. EXACT SIGN LOCATIONS TO BE DETERMINED BY THE ENGINEER.
2. FOR ADDITIONAL CONSTRUCTION AREA SIGNS, SEE CONSTRUCTION AREA SIGN SHEET AND TRAFFIC HANDLING PLANS.

LEGEND

(X) CONSTRUCTION AREA SIGN LETTER
▮ PCMS - PORTABLE CHANGEABLE MESSAGE SIGN
<CA> CALIFORNIA SIGN CODE

DETOUR FOR CLOSURE OF EB Rte 70

TRAFFIC DETOUR PLAN:

1. CLOSE EB Rte 70
2. TAKE WHEELOCK Rd TO DURHAM PENTZ Rd
3. TURN RIGHT ON DURHAM PENTZ Rd
4. TAKE DURHAM PENTZ Rd TO PENTZ Rd
5. TURN RIGHT ON PENTZ Rd
6. TAKE PENTZ Rd TO EB Rte 70

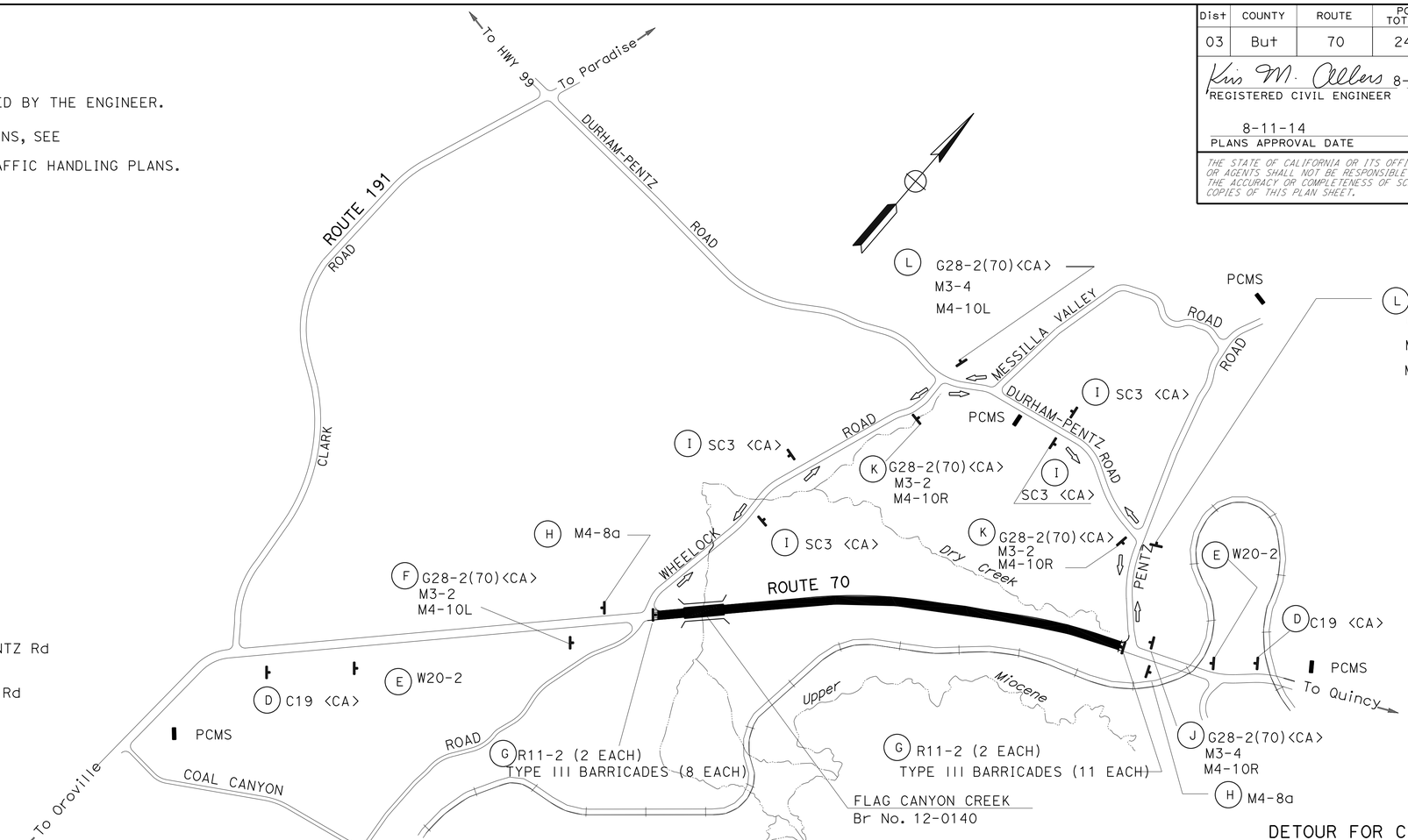

DETOUR FOR CLOSURE OF WB Rte 70

TRAFFIC DETOUR PLAN:

1. CLOSE WB Rte 70
2. TAKE PENTZ Rd TO DURHAM PENTZ Rd
3. TURN LEFT ON DURHAM PENTZ Rd
4. TAKE DURHAM PENTZ Rd TO WHEELOCK Rd
5. TURN LEFT ON WHEELOCK Rd
6. TAKE WHEELOCK Rd TO WB Rte 70

STATIONARY MOUNTED CONSTRUCTION AREA SIGNS

SIGN LETTER	SIGN CODE FEDERAL	SIGN CODE CALIFORNIA	PANEL SIZE	SIGN MESSAGE	NUMBER OF POST AND SIZE	NUMBER OF SIGNS
D		C19	48" x 48"	ROAD CLOSED AHEAD	1 - 6" x 6"	2
E	W20-2		48" x 48"	DETOUR AHEAD	1 - 6" x 6"	2
F	M3-2 M4-10L	G28-2(70)	24" x 25" 24" x 12" 48" x 18"	ROUTE 70 MARKER EAST DETOUR (INSIDE ARROW)	1 - 4" x 6"	1
G	R11-2		48" x 30"	ROAD CLOSED	BARRICADE MOUNTED	4
H	M4-8a		24" x 18"	END DETOUR	1 - 4" x 6"	2
I	SC3		48" x 18"	DETOUR WITH ARROW	1 - 4" x 6"	4
J	M3-4 M4-10R	G28-2(70)	24" x 25" 24" x 12" 48" x 18"	ROUTE 70 MARKER WEST DETOUR (INSIDE ARROW)	1 - 4" x 6"	1
K	M3-2 M4-10R	G28-2(70)	24" x 25" 24" x 12" 48" x 18"	ROUTE 70 MARKER EAST DETOUR (INSIDE ARROW)	1 - 4" x 6"	2
L	M3-2 M4-10L	G28-2(70)	24" x 25" 24" x 12" 48" x 18"	ROUTE 70 MARKER WEST DETOUR (INSIDE ARROW)	1 - 4" x 6"	2

APPROVED FOR MOTORIST INFORMATION WORK ONLY

MOTORIST INFORMATION PLAN

MI-1

REVISED BY | DATE REVISED
KRIS ALBERS | JACK KEMMERLY
CALCULATED-DESIGNED BY | CHECKED BY
FUNCTIONAL SUPERVISOR: SERGIO ACEVES
STATE OF CALIFORNIA - DEPARTMENT OF TRANSPORTATION
Caltrans
TRAFFIC

LAST REVISION 07-28-14 | DATE PLOTTED => 20-OCT-2014 | TIME PLOTTED => 13:49

Dist	COUNTY	ROUTE	POST MILES TOTAL PROJECT	SHEET No.	TOTAL SHEETS
03	But	70	24.26	25	123

Kris M. Albers 8-11-14
REGISTERED CIVIL ENGINEER DATE

8-11-14
PLANS APPROVAL DATE

REGISTERED PROFESSIONAL ENGINEER
KRIS M. ALBERS
No. 49986
Exp. 6-30-15
CIVIL
STATE OF CALIFORNIA

THE STATE OF CALIFORNIA OR ITS OFFICERS OR AGENTS SHALL NOT BE RESPONSIBLE FOR THE ACCURACY OR COMPLETENESS OF SCANNED COPIES OF THIS PLAN SHEET.

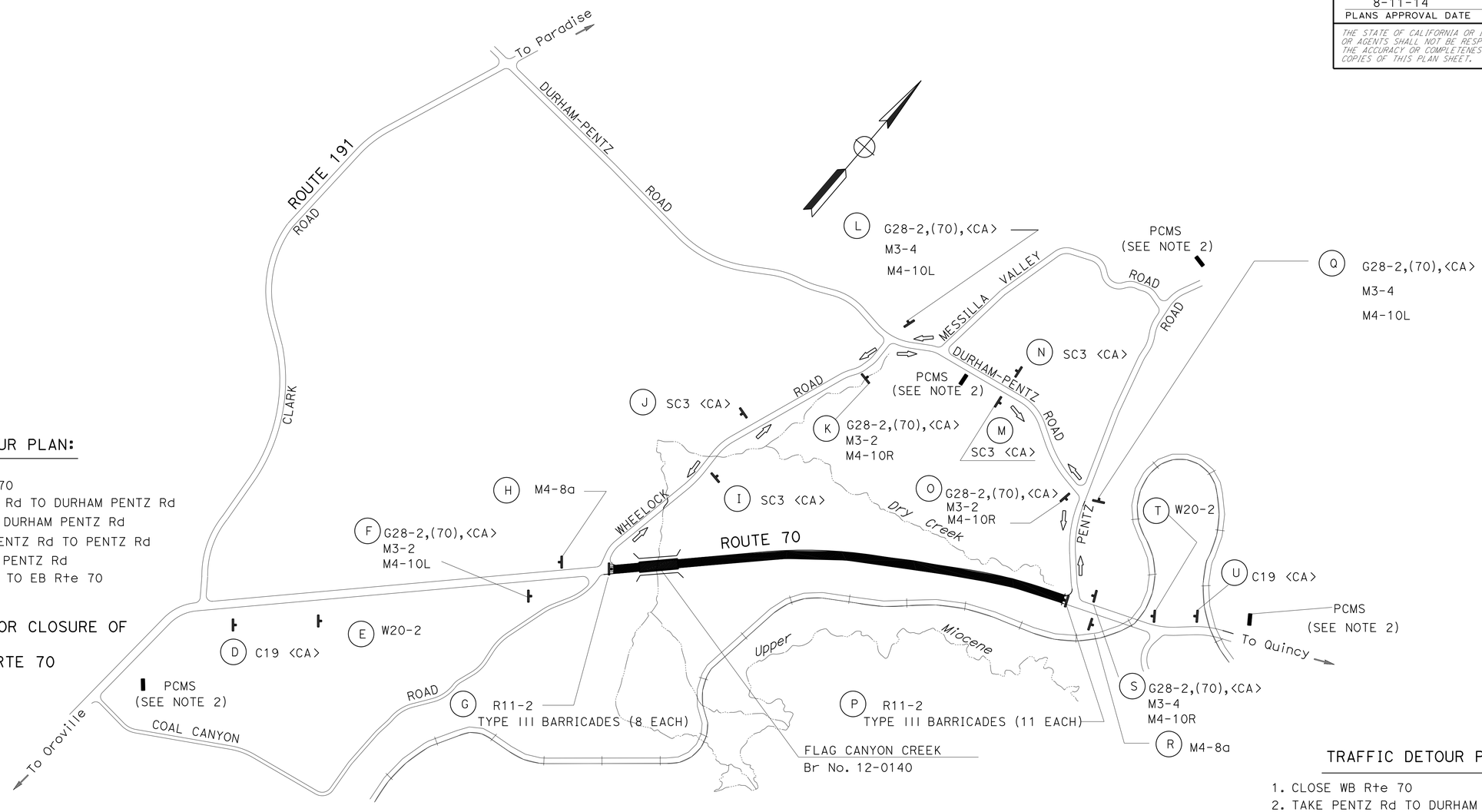

TRAFFIC DETOUR PLAN:

1. CLOSE EB Rte 70
2. TAKE WHEELOCK Rd TO DURHAM PENTZ Rd
3. TURN RIGHT ON DURHAM PENTZ Rd
4. TAKE DURHAM PENTZ Rd TO PENTZ Rd
5. TURN RIGHT ON PENTZ Rd
6. TAKE PENTZ Rd TO EB Rte 70

DETOUR FOR CLOSURE OF

EB RTE 70

TRAFFIC DETOUR PLAN:

1. CLOSE WB Rte 70
2. TAKE PENTZ Rd TO DURHAM PENTZ Rd
3. TURN LEFT ON DURHAM PENTZ Rd
4. TAKE DURHAM PENTZ Rd TO WHEELOCK Rd
5. TURN LEFT ON WHEELOCK Rd
6. TAKE WHEELOCK Rd TO WB Rte 70

DETOUR FOR CLOSURE OF

WB RTE 70

MOTORIST INFORMATION PLAN

APPROVED FOR MOTORIST INFORMATION WORK ONLY

NO SCALE

MI-2

STATE OF CALIFORNIA - DEPARTMENT OF TRANSPORTATION
Caltrans
TRAFFIC

FUNCTIONAL SUPERVISOR: SERGIO ACEVES
CALCULATED-DESIGNED BY: KRIS ALBERS
CHECKED BY: JACK KEMMERLY
REVISED BY
DATE REVISED

LAST REVISION 04-24-14
DATE PLOTTED => 20-OCT-2014
TIME PLOTTED => 13:49

Dist	COUNTY	ROUTE	POST MILES TOTAL PROJECT	SHEET No.	TOTAL SHEETS
03	But	70	24.0/24.5	26	123

M. A. Panchesson 8-11-14
REGISTERED CIVIL ENGINEER DATE

8-11-14
PLANS APPROVAL DATE

REGISTERED PROFESSIONAL ENGINEER
M.A. PANCHESSON
No. 44125
Exp. 06-30-15
CIVIL
STATE OF CALIFORNIA

THE STATE OF CALIFORNIA OR ITS OFFICERS OR AGENTS SHALL NOT BE RESPONSIBLE FOR THE ACCURACY OR COMPLETENESS OF SCANNED COPIES OF THIS PLAN SHEET.

NOTES:

1. TRAFFIC CONTROL BY FLAGGING AS NEEDED.
2. PLACE TEMPORARY FENCE (TYPE ESA) AND TEMPORARY FENCE (TYPE BW) BEFORE REMOVE FENCE, SEE "CONSTRUCTION DETAILS" PLANS FOR LOCATIONS. PREVENT LIVESTOCK FROM ESCAPING DURING FENCE CONSTRUCTION, AND MAINTAIN ALL FENCING AS "STOCK TIGHT".
3. PLACE CONSTRUCTION AREA SIGNS.
4. PLACE WATER POLLUTION CONTROL BMPS.
5. CONSTRUCT TEMPORARY BRIDGE APPROACHES AND ABUTMENTS.
6. CONSTRUCT TEMPORARY BRIDGE.
7. PLACE TEMPORARY POWER POLES, TEMPORARY LIGHTING (FOR "B1" LINE ONLY) SIGNALS, AND FLASHING BEACONS.

LEGEND

CONSTRUCTION THIS STAGE

DIRECTION OF TRAFFIC

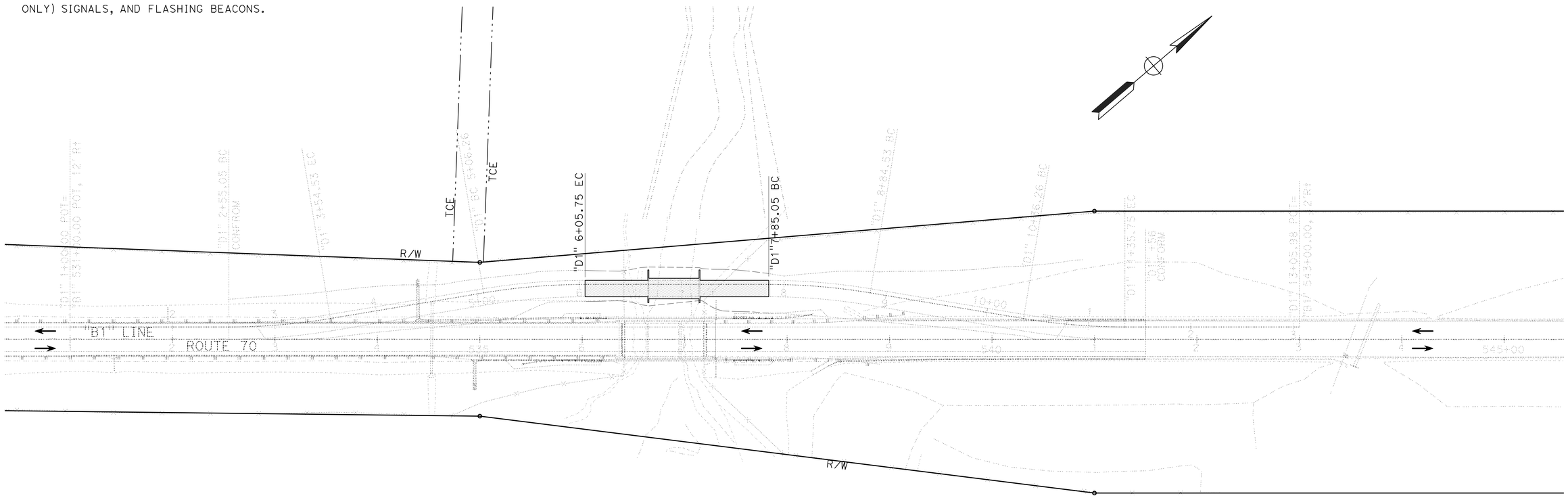

APPROVED FOR STAGE CONSTRUCTION WORK ONLY

STAGE CONSTRUCTION
STAGE 1

SCALE: 1" = 50'

SC-1

STATE OF CALIFORNIA - DEPARTMENT OF TRANSPORTATION
Caltrans
DESIGN

FUNCTIONAL SUPERVISOR: ALI KIANI
CALCULATED-DESIGNED BY: DON WEHRLY
CHECKED BY: MIKE PANCHESSON
REVISED BY
DATE REVISED

LAST REVISION 00-00-00
DATE PLOTTED => 20-OCT-2014
TIME PLOTTED => 13:49

Dist	COUNTY	ROUTE	POST MILES TOTAL PROJECT	SHEET No.	TOTAL SHEETS
03	But	70	24.0/24.5	27	123

M. A. Panchesson 8-11-14
REGISTERED CIVIL ENGINEER DATE

8-11-14
PLANS APPROVAL DATE

REGISTERED PROFESSIONAL ENGINEER M.A. PANCHESSON No. 44125 Exp. 06-30-15 CIVIL STATE OF CALIFORNIA

THE STATE OF CALIFORNIA OR ITS OFFICERS OR AGENTS SHALL NOT BE RESPONSIBLE FOR THE ACCURACY OR COMPLETENESS OF SCANNED COPIES OF THIS PLAN SHEET.

NOTES:

1. PLACE Temp RAILING (TYPE K), LIMIT LINES, PAVEMENT MARKINGS AND STRIPING CHANGES.
2. ACTIVATE TEMPORARY SIGNALS.
3. RUN SINGLE LANE TRAFFIC CONTROL ON EB LANE USING TEMPORARY SIGNALS.
4. CONSTRUCT DETOUR CONNECTIONS TO WB LANE.
5. STOCKPILE EXCESS EXCAVATED MATERIAL.
6. PLACE Temp LIGHTING POLES AND LIGHTING.
7. PAVE DETOUR AND Temp LIGHTING FOR "D1"-LINE.

LEGEND:

CONSTRUCTION THIS STAGE

DIRECTION OF TRAFFIC

Temp CRASH CUSHION MODULE (ARRAY 'TB14')

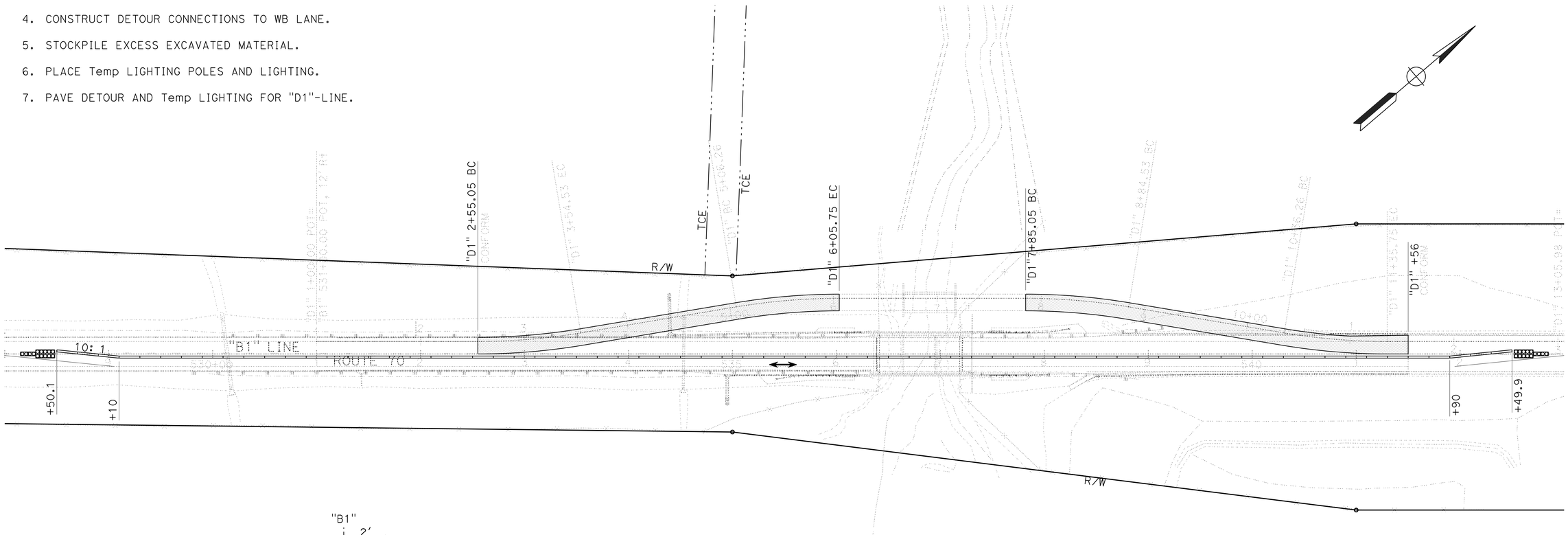

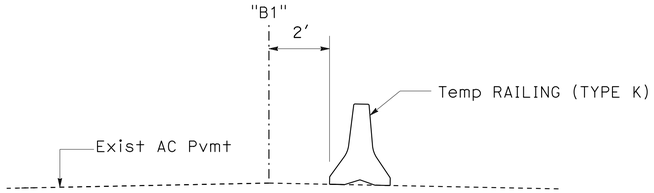

STAGE 2 Temp RAILING (Type K) DETAIL

Sta "B1" 529+10 TO Sta "B1" 541+90

APPROVED FOR STAGE CONSTRUCTION WORK ONLY

STAGE CONSTRUCTION
STAGE 2

SCALE: 1" = 50'

SC-2

STATE OF CALIFORNIA - DEPARTMENT OF TRANSPORTATION
Caltrans
DESIGN

FUNCTIONAL SUPERVISOR: ALI KIANI
CALCULATED-DESIGNED BY: DON WEHRLY
CHECKED BY: MIKE PANCHESSON
REVISED BY
DATE REVISED

LAST REVISION 00-00-00
DATE PLOTTED => 20-OCT-2014
TIME PLOTTED => 13:49

Dist	COUNTY	ROUTE	POST MILES TOTAL PROJECT	SHEET No.	TOTAL SHEETS
03	But	70	24.0/24.5	28	123

M. A. Panchesson 8-11-14
REGISTERED CIVIL ENGINEER DATE

8-11-14
PLANS APPROVAL DATE

REGISTERED PROFESSIONAL ENGINEER M.A. PANCHESSON No. 44125 Exp. 06-30-15 CIVIL STATE OF CALIFORNIA

THE STATE OF CALIFORNIA OR ITS OFFICERS OR AGENTS SHALL NOT BE RESPONSIBLE FOR THE ACCURACY OR COMPLETENESS OF SCANNED COPIES OF THIS PLAN SHEET.

NOTES:

1. PLACE TEMPORARY RAILING (TYPE K) AND STRIPE DETOUR.
2. RUN SINGLE LANE TRAFFIC CONTROL ON DETOUR USING TEMPORARY SIGNALS.
3. REMOVE EXISTING BRIDGE (COMPLETE).
4. CONSTRUCT ABUTMENT FILLS AND R+ SIDE WIDENING.
5. CONSTRUCT NEW ABUTMENTS.
6. PLACE BRIDGE GIRDERS.
7. CONSTRUCT BRIDGE DECK.
8. CONSTRUCT BRIDGE APPROACHES, EB AND/OR Shld.
9. CONSTRUCT BRIDGE Conc BARRIERS.
10. PLACE MGS ALONG EB LANE.
11. PLACE PERMANENT EROSION CONTROL ON CUT/FILL SLOPES.

LEGEND:

CONSTRUCTION THIS STAGE

DIRECTION OF TRAFFIC

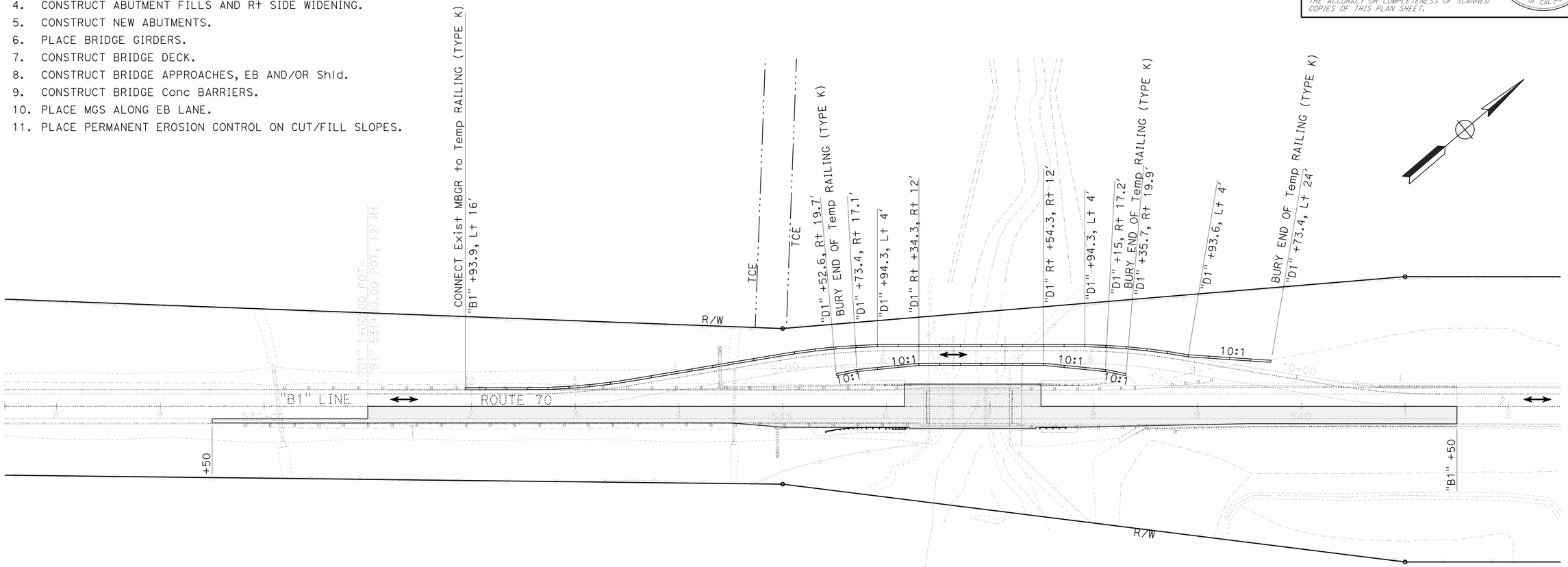

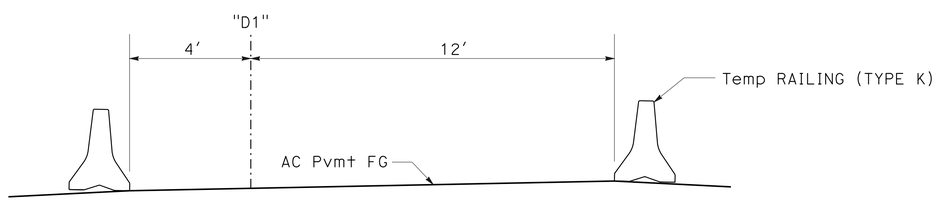

STAGE 3 Temp RAILING (Type K) DETAIL

Sta "D1" 6+34.3 TO Sta "D1" 7+54.3

APPROVED FOR STAGE CONSTRUCTION WORK ONLY

STAGE CONSTRUCTION
STAGE 3
SCALE: 1" = 50' **SC-3**

STATE OF CALIFORNIA - DEPARTMENT OF TRANSPORTATION
Caltrans
DESIGN

FUNCTIONAL SUPERVISOR: ALI KIANI
CALCULATED-DESIGNED BY: DON WEHRLY
CHECKED BY: MIKE PANCHESSON
REVISED BY
DATE REVISED

LAST REVISION 00-00-00
DATE PLOTTED => 20-OCT-2014
TIME PLOTTED => 13:49

Dist	COUNTY	ROUTE	POST MILES TOTAL PROJECT	SHEET No.	TOTAL SHEETS
03	But	70	24.0/24.5	29	123

M. A. Panchesson 8-11-14
REGISTERED CIVIL ENGINEER DATE

8-11-14
PLANS APPROVAL DATE

REGISTERED PROFESSIONAL ENGINEER M.A. PANCHESSON No. 44125 Exp. 06-30-15 CIVIL STATE OF CALIFORNIA

THE STATE OF CALIFORNIA OR ITS OFFICERS OR AGENTS SHALL NOT BE RESPONSIBLE FOR THE ACCURACY OR COMPLETENESS OF SCANNED COPIES OF THIS PLAN SHEET.

NOTES:

1. PLACE TEMPORARY STRIPE ON EB LANE.
2. SHIFT TRAFFIC .
3. PLACE TEMPORARY RAIL (TYPE K) ON EB LANE.
4. REMOVE DETOUR BRIDGE AND ABUTMENTS.
5. REMOVE DETOUR PAVEMENT.
6. CONSTRUCT Lt SIDE SLOPES.
7. RECONSTRUCT WB LANE SUBGRADE AT DETOUR ENDS AND CONSTRUCT WIDENING ON WB LANE.
8. CONSTRUCT FULL DEPTH STRUCTURAL SECTION IN WB LANE.
9. PLACE MGS ALONG WB LANE.
10. PLACE PERMANENT EROSION CONTROL ON Lt SIDE SLOPES.
11. REMOVE TEMPORARY RAILING (TYPE K).
12. REMOVE Temp BRIDGE AND DETOUR.

LEGEND:

CONSTRUCTION THIS STAGE

DIRECTION OF TRAFFIC

Temp CRASH CUSHION MODULE (ARRAY 'TB14')

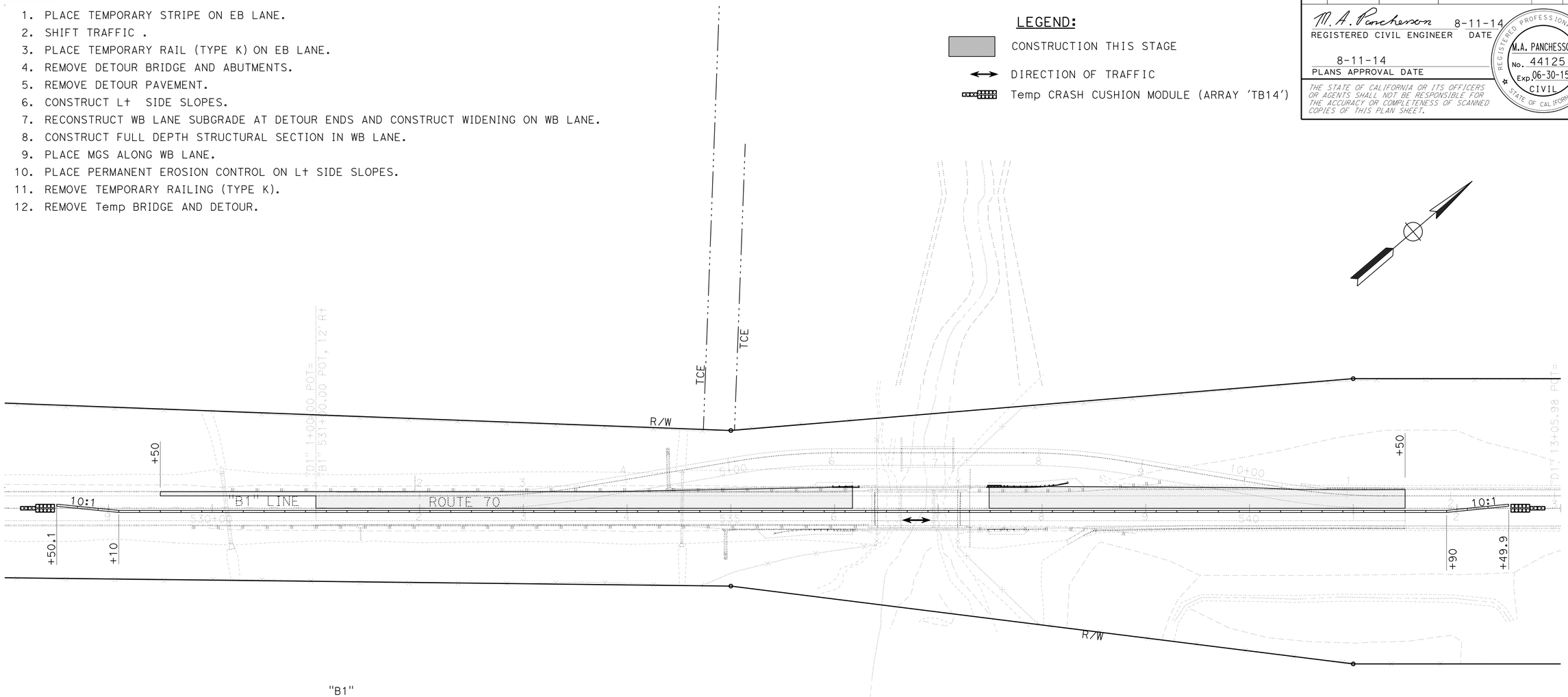

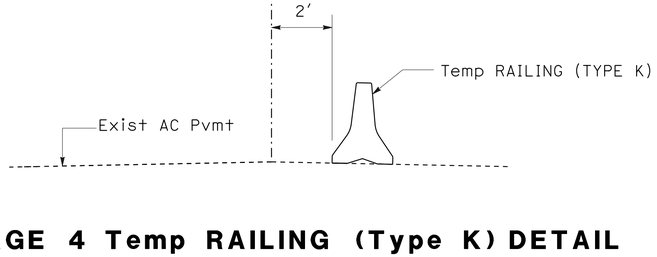

STAGE 4 Temp RAILING (Type K) DETAIL

Sta "B1" 529+10 TO Sta "B1" 541+90

APPROVED FOR STAGE CONSTRUCTION WORK ONLY

STAGE CONSTRUCTION
STAGE 4

SCALE: 1" = 50' **SC-4**

STATE OF CALIFORNIA - DEPARTMENT OF TRANSPORTATION
Caltrans®
DESIGN
FUNCTIONAL SUPERVISOR: ALI KIANI
CALCULATED-DESIGNED BY: DON WEHRLY
CHECKED BY: MIKE PANCHESSON
REVISED BY
DATE REVISED

LAST REVISION 00-00-00
DATE PLOTTED => 20-OCT-2014
TIME PLOTTED => 13:49

Dist	COUNTY	ROUTE	POST MILES TOTAL PROJECT	SHEET No.	TOTAL SHEETS
03	But	70	24.0/24.5	30	123

M. A. Panchesson 8-11-14
REGISTERED CIVIL ENGINEER DATE

8-11-14
PLANS APPROVAL DATE

REGISTERED PROFESSIONAL ENGINEER M.A. PANCHESSON No. 44125 Exp. 06-30-15 CIVIL STATE OF CALIFORNIA

THE STATE OF CALIFORNIA OR ITS OFFICERS OR AGENTS SHALL NOT BE RESPONSIBLE FOR THE ACCURACY OR COMPLETENESS OF SCANNED COPIES OF THIS PLAN SHEET.

NOTES:

1. REMOVE TEMPORARY SIGNAL SYSTEM AND WARNING SIGNS, USE FLAGGERS TO CONTROL TRAFFIC AS NEEDED.
2. REMOVE TEMPORARY POWER LINES.
3. PLACE SLURRY SEAL.
4. PLACE NEW SIGNS.
5. PLACE FINAL HMA LIFT ON BOTH LANES AND SHOULDERS.
6. PROFILE GRIND DECK AND SKID TEST.
7. PLACE PERMANENT STRIPING.
8. PLACE PERMANENT FENCE BEFORE REMOVE TEMPORARY FENCE, SEE "CONSTRUCTION DETAILS" PLANS FOR FENCING INFORMATION.
9. FINISH PROJECT.

LEGEND

CONSTRUCTION THIS STAGE

DIRECTION OF TRAFFIC

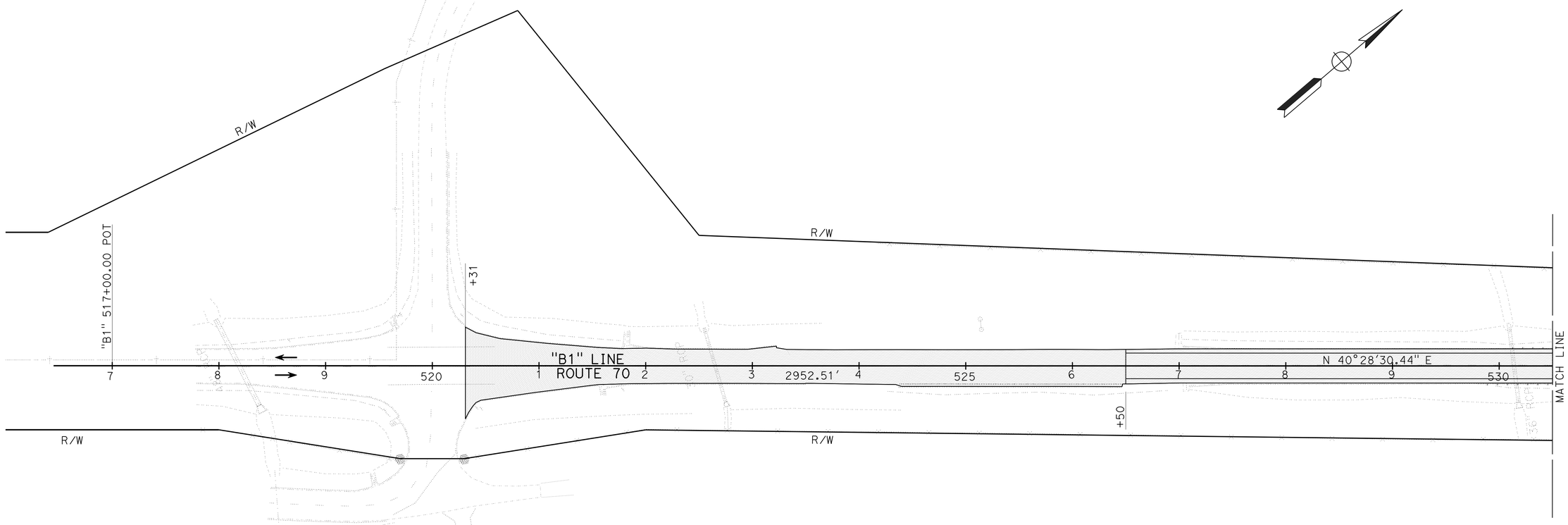

APPROVED FOR STAGE CONSTRUCTION WORK ONLY

STAGE CONSTRUCTION
STAGE 5

SCALE: 1" = 50'

SC-5

REVISED BY | DATE REVISED

DON WEHRLY | MIKE PANCHESSON

CALCULATED-DESIGNED BY | CHECKED BY

FUNCTIONAL SUPERVISOR: ALI KIANI

STATE OF CALIFORNIA - DEPARTMENT OF TRANSPORTATION

Caltrans

DESIGN

LAST REVISION 00-00-00 | DATE PLOTTED => 20-OCT-2014 | TIME PLOTTED => 13:49

Dist	COUNTY	ROUTE	POST MILES TOTAL PROJECT	SHEET No.	TOTAL SHEETS
03	But	70	24.0/24.5	31	123

M. A. Panchesson 8-11-14
REGISTERED CIVIL ENGINEER DATE

8-11-14
PLANS APPROVAL DATE

REGISTERED PROFESSIONAL ENGINEER
M.A. PANCHESSON
No. 44125
Exp. 06-30-15
CIVIL
STATE OF CALIFORNIA

THE STATE OF CALIFORNIA OR ITS OFFICERS OR AGENTS SHALL NOT BE RESPONSIBLE FOR THE ACCURACY OR COMPLETENESS OF SCANNED COPIES OF THIS PLAN SHEET.

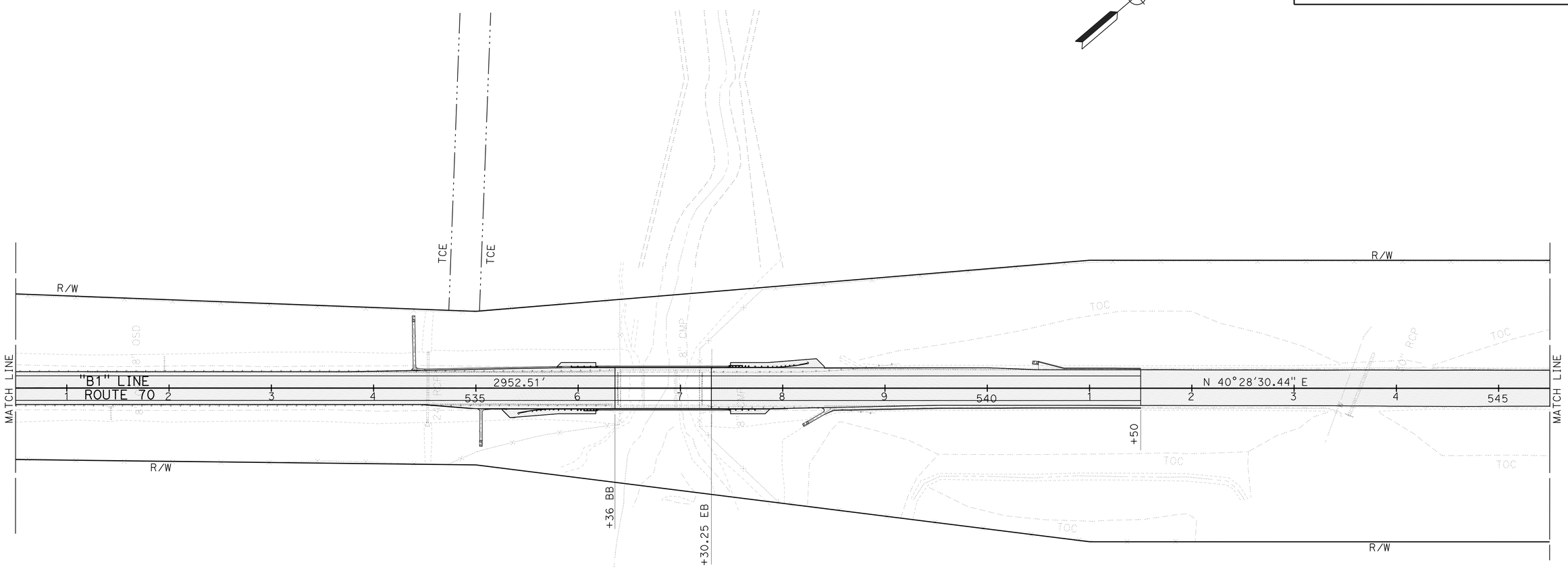

STAGE CONSTRUCTION
STAGE 5
SCALE: 1" = 50'

SC-6

REVISED BY	DATE REVISED

CALCULATED-DESIGNED BY: DON WEHRLY
CHECKED BY: MIKE PANCHESSON
FUNCTIONAL SUPERVISOR: ALI KIANI

STATE OF CALIFORNIA - DEPARTMENT OF TRANSPORTATION
Caltrans
DESIGN

LAST REVISION 00-00-00
DATE PLOTTED => 20-OCT-2014
TIME PLOTTED => 13:49

Dist	COUNTY	ROUTE	POST MILES TOTAL PROJECT	SHEET No.	TOTAL SHEETS
03	But	70	24.0/24.5	32	123

M. A. Panchesson 8-11-14
REGISTERED CIVIL ENGINEER DATE

8-11-14
PLANS APPROVAL DATE

REGISTERED PROFESSIONAL ENGINEER
M.A. PANCHESSON
No. 44125
Exp. 06-30-15
CIVIL
STATE OF CALIFORNIA

THE STATE OF CALIFORNIA OR ITS OFFICERS OR AGENTS SHALL NOT BE RESPONSIBLE FOR THE ACCURACY OR COMPLETENESS OF SCANNED COPIES OF THIS PLAN SHEET.

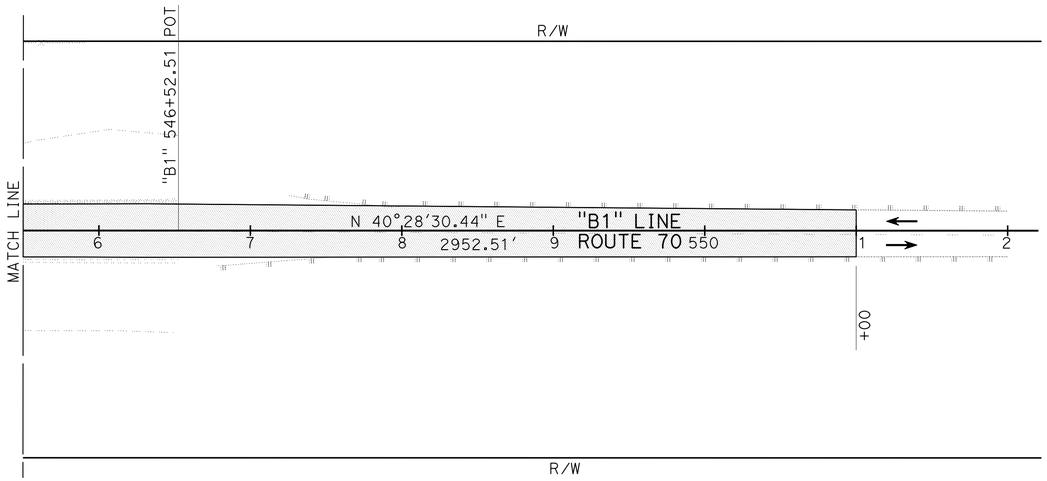

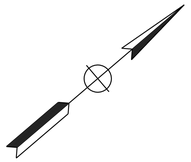

STAGE CONSTRUCTION
STAGE 5
SCALE: 1" = 50'

SC-7

STATE OF CALIFORNIA - DEPARTMENT OF TRANSPORTATION
Caltrans®
DESIGN

FUNCTIONAL SUPERVISOR: ALI KIANI
CALCULATED-DESIGNED BY: DON WEHRLY
CHECKED BY: MIKE PANCHESSON
REVISED BY
DATE REVISED

LAST REVISION 00-00-00
DATE PLOTTED => 20-OCT-2014
TIME PLOTTED => 13:49

Dist	COUNTY	ROUTE	POST MILES TOTAL PROJECT	SHEET No.	TOTAL SHEETS
03	But	70	24.0/24.5	33	123

Kris M. Albers 8-11-14
REGISTERED CIVIL ENGINEER DATE

8-11-14
PLANS APPROVAL DATE

REGISTERED PROFESSIONAL ENGINEER
KRIS M. ALBERS
No. 49986
Exp. 6-30-15
CIVIL
STATE OF CALIFORNIA

THE STATE OF CALIFORNIA OR ITS OFFICERS OR AGENTS SHALL NOT BE RESPONSIBLE FOR THE ACCURACY OR COMPLETENESS OF SCANNED COPIES OF THIS PLAN SHEET.

LEGEND

	LIMIT OF STRIPING PATTERN
No./X	PAVEMENT DELINEATION DETAIL NUMBER P=PAINT OR T=TAPE
LL/P	LIMIT LINE P=TPMP
TAPE	TEMPORARY TRAFFIC STRIPE (TAPE)
PAINT	TEMPORARY TRAFFIC STRIPE (PAINT)
TPMP	TEMPORARY PAVEMENT MARKING (PAINT)
	TRAFFIC PLASTIC DRUM
	TYPE III BARRICADE
BLD/T	BICYCLE LOOP DETECTOR SYMBOL PAVEMENT MARKING T=TAPE
X	CONSTRUCTION AREA SIGN LETTER
<CA>	CALIFORNIA SIGN CODE
	SIGN - SINGLE POST
	DIRECTION OF TRAVEL
	CHANGE IN STRIPING PATTERN

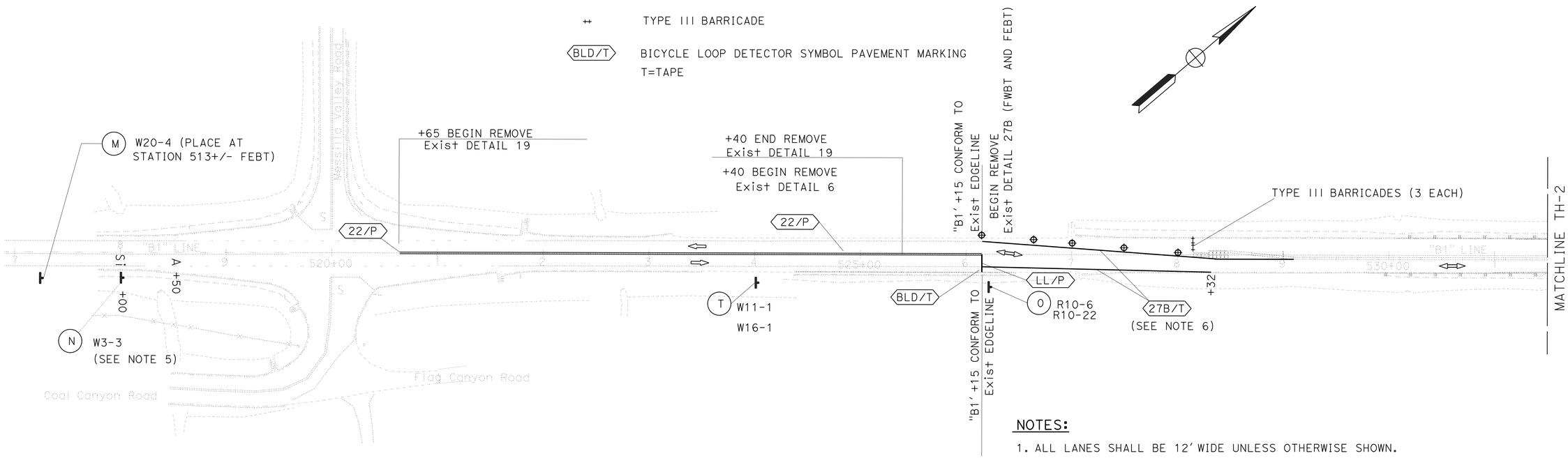

NOTES:

1. ALL LANES SHALL BE 12' WIDE UNLESS OTHERWISE SHOWN.
2. ALL EXISTING SIGNS NOT SHOWN FOR REMOVAL SHALL REMAIN IN PLACE.
3. ALL SIGN CODES SHOWN ARE FEDERAL SIGN CODES UNLESS OTHERWISE DESIGNATED AS CALIFORNIA SIGN CODES.
4. ALL TRAFFIC PLASTIC DRUMS SHALL BE INSTALLED ON 25 FOOT CENTERS UNLESS OTHERWISE SHOWN.
5. SIGN PANEL TO BE INSTALLED ON TEMPORARY FLASHING BEACON SYSTEM. FOR FLASHING BEACON INSTALLATION DETAILS, SEE ELECTRICAL PLANS.
6. FOR STAGE 4, USE TEMPORARY TRAFFIC STRIPE (PAINT)

APPROVED FOR TRAFFIC HANDLING WORK ONLY

TRAFFIC HANDLING PLAN

STAGE 2 AND STAGE 4

SCALE: 1"=50'

TH-1

STATE OF CALIFORNIA - DEPARTMENT OF TRANSPORTATION
Caltrans
TRAFFIC

FUNCTIONAL SUPERVISOR: SERGIO ACEVES
CALCULATED-DESIGNED BY: KRIS ALBERS
CHECKED BY: JACK KEMMERLY
REVISED BY
DATE REVISED

LAST REVISION 07-28-14
DATE PLOTTED => 20-OCT-2014
TIME PLOTTED => 13:49

Dist	COUNTY	ROUTE	POST MILES TOTAL PROJECT	SHEET No.	TOTAL SHEETS
03	But	70	24.0/24.5	34	123

Kris M. Albers 8-11-14
REGISTERED CIVIL ENGINEER DATE

8-11-14
PLANS APPROVAL DATE

REGISTERED PROFESSIONAL ENGINEER
KRIS M. ALBERS
No. 49986
Exp. 6-30-15
CIVIL
STATE OF CALIFORNIA

THE STATE OF CALIFORNIA OR ITS OFFICERS OR AGENTS SHALL NOT BE RESPONSIBLE FOR THE ACCURACY OR COMPLETENESS OF SCANNED COPIES OF THIS PLAN SHEET.

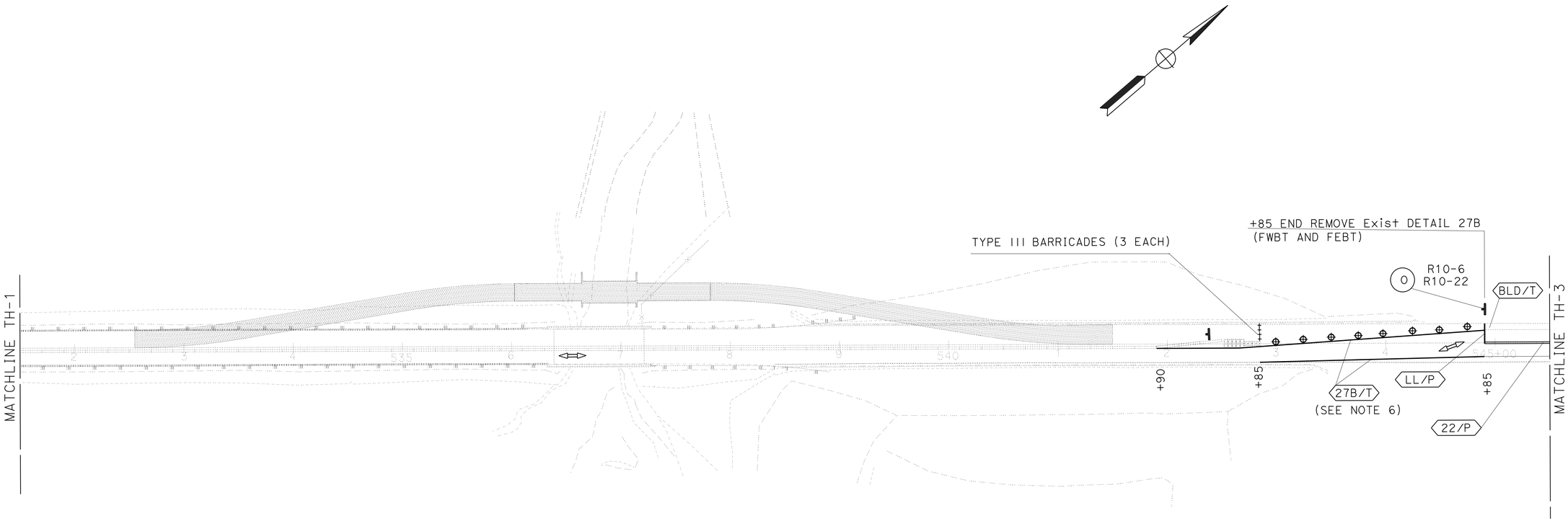

APPROVED FOR TRAFFIC HANDLING WORK ONLY

TRAFFIC HANDLING PLAN

STAGE 2 AND STAGE 4

SCALE: 1"=50'

TH-2

STATE OF CALIFORNIA - DEPARTMENT OF TRANSPORTATION
Caltrans
TRAFFIC

FUNCTIONAL SUPERVISOR: SERGIO ACEVES
CALCULATED-DESIGNED BY: KRIS ALBERS
CHECKED BY: JACK KEMMERLY
REVISED BY
DATE REVISED

LAST REVISION 07-28-14
DATE PLOTTED => 20-OCT-2014
TIME PLOTTED => 13:49

Dist	COUNTY	ROUTE	POST MILES TOTAL PROJECT	SHEET No.	TOTAL SHEETS
03	But	70	24.0/24.5	35	123

Kris M. Albers 8-11-14
REGISTERED CIVIL ENGINEER DATE

8-11-14
PLANS APPROVAL DATE

REGISTERED PROFESSIONAL ENGINEER
KRIS M. ALBERS
No. 49986
Exp. 6-30-15
CIVIL
STATE OF CALIFORNIA

THE STATE OF CALIFORNIA OR ITS OFFICERS OR AGENTS SHALL NOT BE RESPONSIBLE FOR THE ACCURACY OR COMPLETENESS OF SCANNED COPIES OF THIS PLAN SHEET.

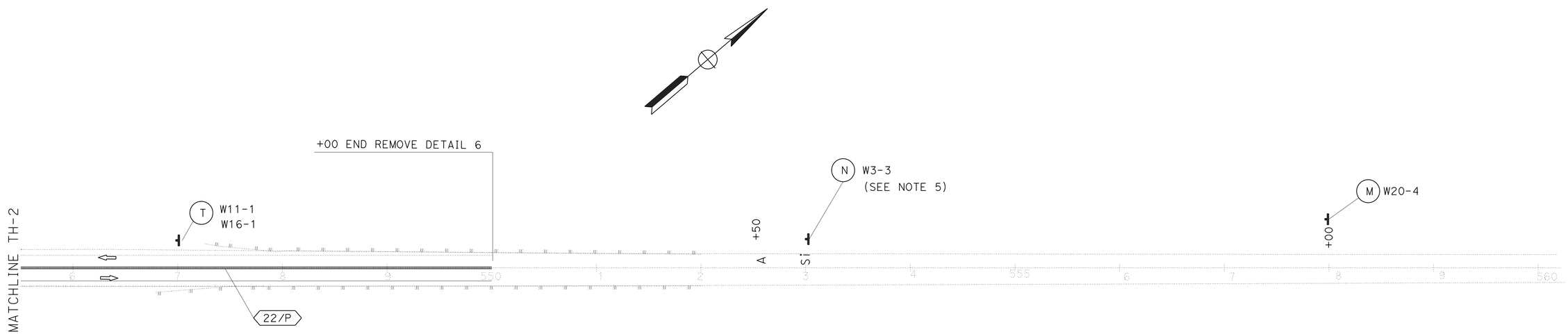

APPROVED FOR TRAFFIC HANDLING WORK ONLY

TRAFFIC HANDLING PLAN

STAGE 2 AND STAGE 4

SCALE: 1"=50'

TH-3

STATE OF CALIFORNIA - DEPARTMENT OF TRANSPORTATION	Caltrans
TRAFFIC	
FUNCTIONAL SUPERVISOR	SERGIO ACEVES
CALCULATED-DESIGNED BY	KRIS ALBERS
CHECKED BY	JACK KEMMERLY
REVISED BY	
DATE REVISED	

LAST REVISION 07-28-14
DATE PLOTTED => 20-OCT-2014
TIME PLOTTED => 13:49

Dist	COUNTY	ROUTE	POST MILES TOTAL PROJECT	SHEET No.	TOTAL SHEETS
03	But	70	24.0/24.5	36	123

Kris M. Albers 8-11-14
REGISTERED CIVIL ENGINEER DATE

8-11-14
PLANS APPROVAL DATE

REGISTERED PROFESSIONAL ENGINEER
KRIS M. ALBERS
No. 49986
Exp. 6-30-15
CIVIL
STATE OF CALIFORNIA

THE STATE OF CALIFORNIA OR ITS OFFICERS OR AGENTS SHALL NOT BE RESPONSIBLE FOR THE ACCURACY OR COMPLETENESS OF SCANNED COPIES OF THIS PLAN SHEET.

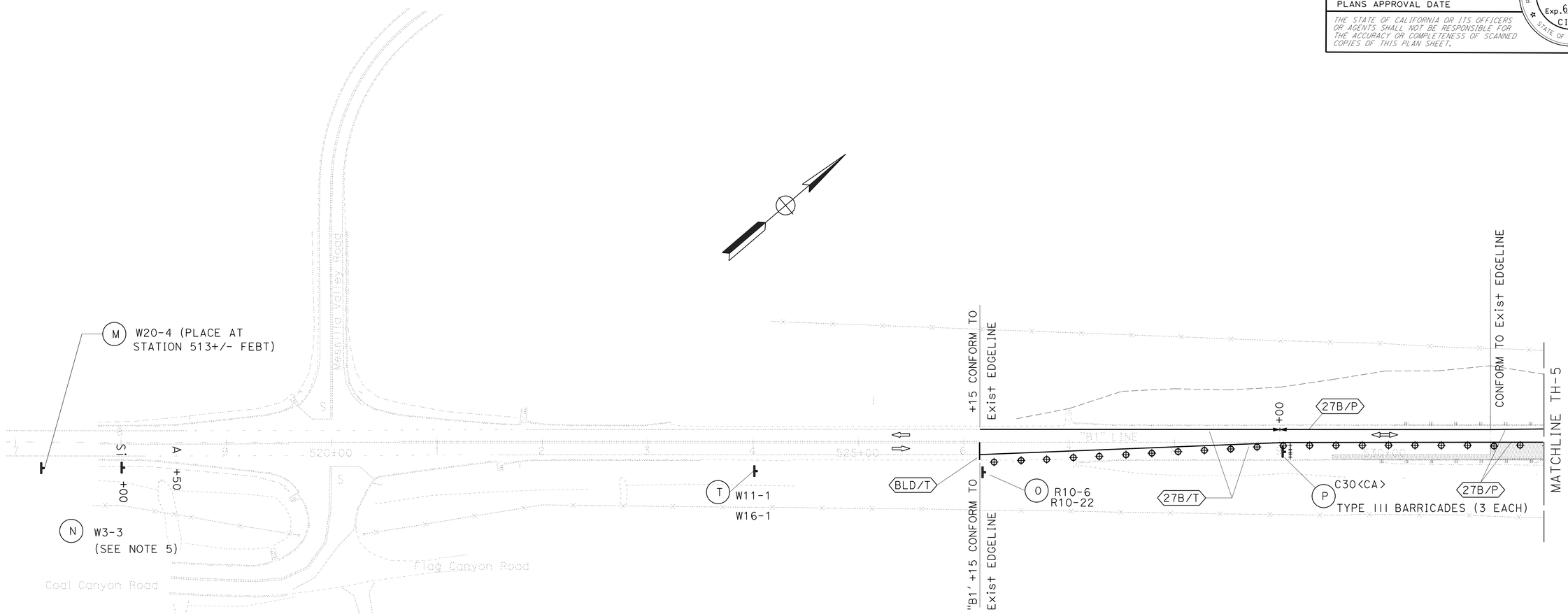

TRAFFIC HANDLING PLAN

STAGE 3

SCALE: 1"=50'

TH-4

APPROVED FOR TRAFFIC HANDLING WORK ONLY

KRIS ALBERS	REVISED BY
JACK KEMMERLY	DATE REVISED
CALCULATED-DESIGNED BY	
CHECKED BY	
FUNCTIONAL SUPERVISOR	
SERGIO ACEVES	

STATE OF CALIFORNIA - DEPARTMENT OF TRANSPORTATION
Caltrans
TRAFFIC

LAST REVISION 07-28-14
DATE PLOTTED => 20-OCT-2014
TIME PLOTTED => 13:49

Dist	COUNTY	ROUTE	POST MILES TOTAL PROJECT	SHEET No.	TOTAL SHEETS
03	But	70	24.0/24.5	37	123

Kris M. Albers 8-11-14
REGISTERED CIVIL ENGINEER DATE

8-11-14
PLANS APPROVAL DATE

REGISTERED PROFESSIONAL ENGINEER
KRIS M. ALBERS
No. 49986
Exp. 6-30-15
CIVIL
STATE OF CALIFORNIA

THE STATE OF CALIFORNIA OR ITS OFFICERS OR AGENTS SHALL NOT BE RESPONSIBLE FOR THE ACCURACY OR COMPLETENESS OF SCANNED COPIES OF THIS PLAN SHEET.

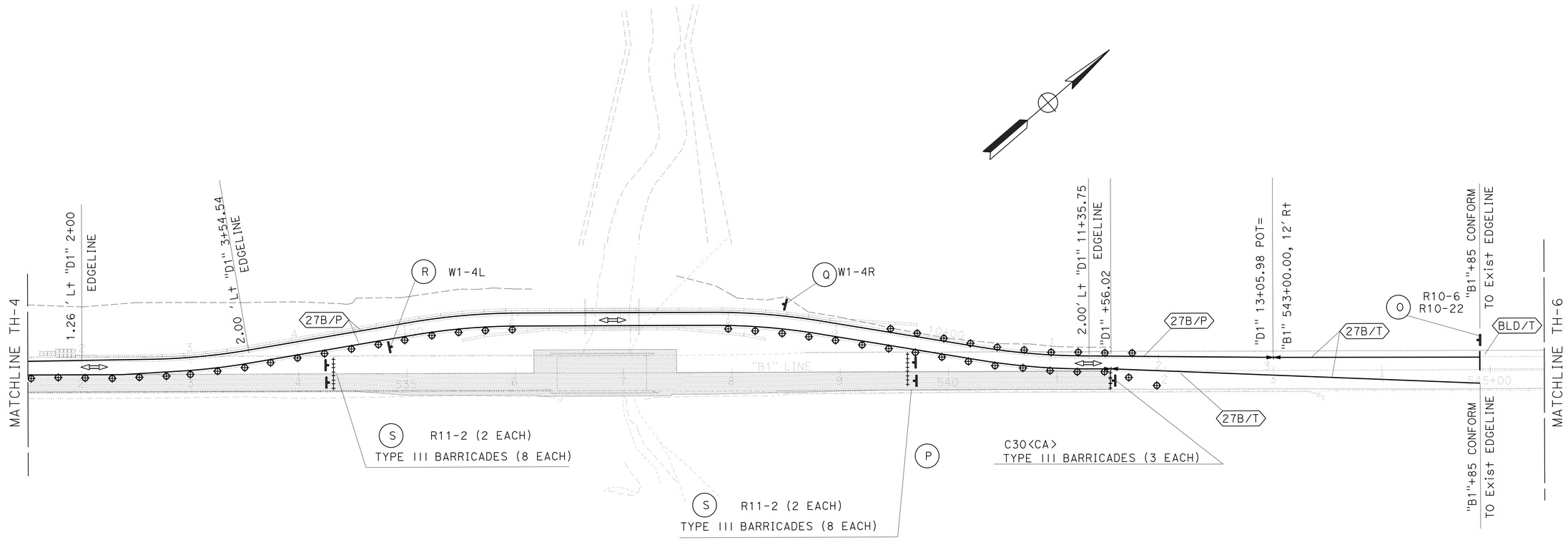

TRAFFIC HANDLING PLAN
STAGE 3

APPROVED FOR TRAFFIC HANDLING WORK ONLY

SCALE: 1"=50'

TH-5

STATE OF CALIFORNIA - DEPARTMENT OF TRANSPORTATION
Caltrans
TRAFFIC

FUNCTIONAL SUPERVISOR: SERGIO ACEVES
CALCULATED-DESIGNED BY: KRIS ALBERS
CHECKED BY: JACK KEMMERLY
REVISED BY
DATE REVISED

LAST REVISION 07-28-14
DATE PLOTTED => 20-OCT-2014
TIME PLOTTED => 13:49

Dist	COUNTY	ROUTE	POST MILES TOTAL PROJECT	SHEET No.	TOTAL SHEETS
03	But	70	24.0/24.5	38	123

Kris M. Albers 8-11-14
REGISTERED CIVIL ENGINEER DATE

8-11-14
PLANS APPROVAL DATE

REGISTERED PROFESSIONAL ENGINEER
KRIS M. ALBERS
No. 49986
Exp. 6-30-15
CIVIL
STATE OF CALIFORNIA

THE STATE OF CALIFORNIA OR ITS OFFICERS OR AGENTS SHALL NOT BE RESPONSIBLE FOR THE ACCURACY OR COMPLETENESS OF SCANNED COPIES OF THIS PLAN SHEET.

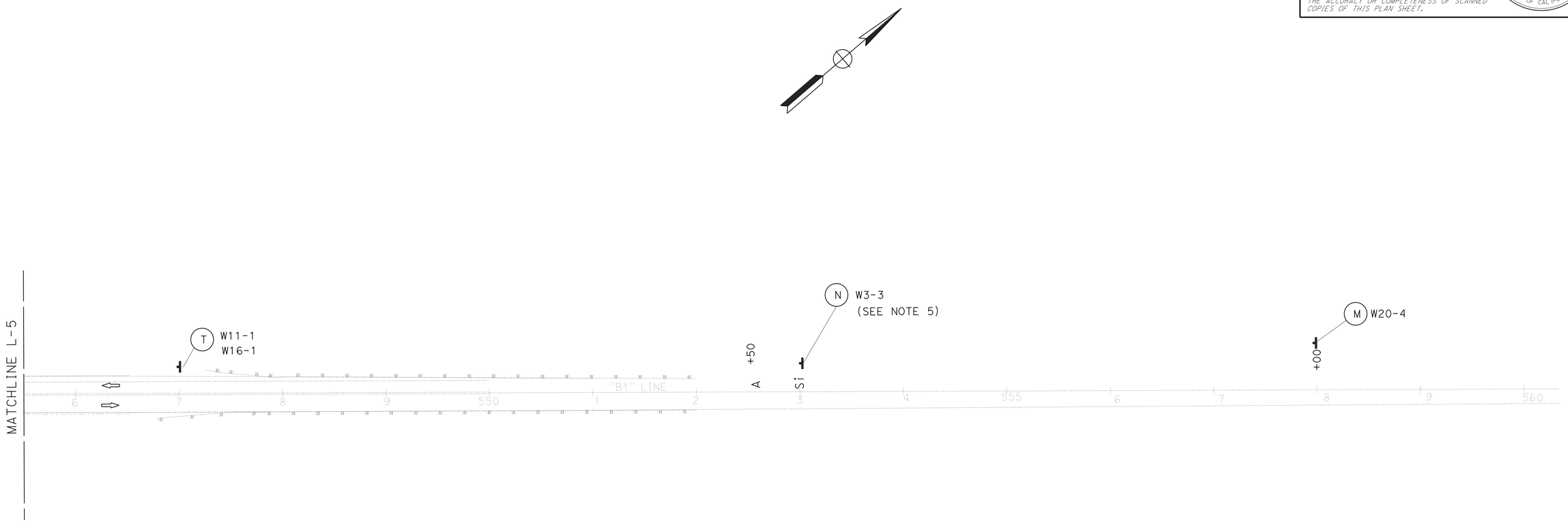

APPROVED FOR TRAFFIC HANDLING WORK ONLY

TRAFFIC HANDLING PLAN

STAGE 3

SCALE: 1"=50'

TH-6

STATE OF CALIFORNIA - DEPARTMENT OF TRANSPORTATION
Caltrans
TRAFFIC

FUNCTIONAL SUPERVISOR: SERGIO ACEVES
CALCULATED-DESIGNED BY: KRIS ALBERS
CHECKED BY: JACK KEMMERLY
REVISED BY
DATE REVISED

LAST REVISION 07-28-14
DATE PLOTTED => 20-OCT-2014
TIME PLOTTED => 13:49

Dist	COUNTY	ROUTE	POST MILES TOTAL PROJECT	SHEET No.	TOTAL SHEETS
03	But	70	24.0/24.5	39	123

Kris M. Albers 8-11-14
REGISTERED CIVIL ENGINEER DATE

8-11-14
PLANS APPROVAL DATE

REGISTERED PROFESSIONAL ENGINEER
KRIS M. ALBERS
No. 49986
Exp. 6-30-15
CIVIL
STATE OF CALIFORNIA

THE STATE OF CALIFORNIA OR ITS OFFICERS OR AGENTS SHALL NOT BE RESPONSIBLE FOR THE ACCURACY OR COMPLETENESS OF SCANNED COPIES OF THIS PLAN SHEET.

STATIONARY MOUNTED CONSTRUCTION AREA SIGNS

SIGN LETTER	SIGN CODE FEDERAL	SIGN CODE CALIFORNIA	PANEL SIZE	SIGN MESSAGE	NUMBER OF POST AND SIZE	NUMBER OF SIGNS
M	W20-4		48" x 48"	ONE LANE ROAD AHEAD	1 - 4" x 6"	2
N	W3-3		48" x 48"	SIGNAL AHEAD SYMBOL	1 - 6" x 6"	2
O	R10-6 R10-22		24" x 36" 12" x 18"	STOP HERE ON RED BYCYCLE SYMBOL DETECTOR LOOP	1 - 4" x 6"	2
P		C30	36" x 36"	LANE CLOSED	BARRICADE MOUNTED	2
T	W11-1 W16-1		24" x 24" 18" x 24"	BYCYCLE SYMBOL SHARE THE ROAD	1 - 4" x 6"	2
Q	W1-4L		30" x 30"	REVERSE CURVE	1 - 4" x 6"	1
R	W1-4R		30" x 30"	REVERSE CURVE	1 - 4" x 6"	1
S	R11-2		48" x 30"	ROAD CLOSED	BARRICADE MOUNTED	4

NOTES:

1. EXACT SIGN LOCATION TO BE DETERMINED BY THE ENGINEER.
2. FOR ADDITIONAL CONSTRUCTION AREA SIGNS, SEE CONSTRUCTION AREA SIGN SHEET

TEMPORARY PAVEMENT MARKING (PAINT)

	DESCRIPTION	NUMBER	SQFT
STAGE 2	"SIGNAL"	2	64
	"AHEAD"	2	62
	LIMIT LINE	2	32
	BYCYCLE SYMBOL DETECTOR LOOP	2	4
	TOTAL		162

TEMPORARY PAVEMENT MARKER

DETAIL NUMBER	TYPE D
	EA
22	91
TOTAL	91

TEMPORARY TRAFFIC STRIPE (PAINT)

	Location	Direction	Detail 22 LINEAR FOOT	Detail 27B LINEAR FOOT
STAGE 2	Sta "B1" 520+65 TO "B1" 526+15		550	
	Sta "B1" 544+85 TO "B1" 550+00		515	
	TOTAL STAGE 2		1065	
STAGE 3	Sta "B1" 529+00 TO "B1" 531+00	FWBT		200
	Sta "D1" 1+00 TO "D1" 13+05.98	FWBT		1206
	Sta "B1" 529+00 TO "B1" 531+00	FEBT		200
	Sta "D1" 1+00 TO "D1" 11+56.02	FEBT		1056
	TOTAL STAGE 3			2662
	TOTAL STAGE 2 AND 3		3727	

TEMPORARY TRAFFIC STRIPE (TAPE)

	Location	Direction	Detail 27B LINEAR FOOT
STAGE 2	Sta "B1" 526+15 Lt TO "B1" 529+00 Lt	FWBT	285
	Sta "B1" 526+15 Rt TO "B1" 528+32 Rt	FEBT	217
	Sta "B1" 541+90 Lt TO "B1" 544+85 Lt	FWBT	295
	Sta "B1" 542+85 Rt TO "B1" 544+85 Rt	FEBT	200
	TOTAL STAGE 2		997
STAGE 3	Sta "B1" 526+15 Rt TO "B1" 529+00 Rt	FEBT	285
	Sta "B1" 526+15 Lt TO "B1" 529+00 Lt	FWBT	285
	Sta "B1" 541+50 Rt TO "B1" 544+85 Rt	FEBT	335
	Sta "B1" 543+00 Lt TO "B1" 544+85 Lt	FWBT	185
	TOTAL STAGE 3		1090
	TOTAL STAGE 2 AND 3		2087

APPROVED FOR TRAFFIC HANDLING WORK ONLY

TRAFFIC HANDLING QUANTITIES

THQ-1

REVISED BY | DATE REVISED
KRIS ALBERS | JACK KEMMERLY
CALCULATED-DESIGNED BY | CHECKED BY
FUNCTIONAL SUPERVISOR: SERGIO ACEVES
STATE OF CALIFORNIA - DEPARTMENT OF TRANSPORTATION
Caltrans
TRAFFIC

LAST REVISION 07-28-14 | DATE PLOTTED => 20-OCT-2014 | TIME PLOTTED => 13:49

Dist	COUNTY	ROUTE	POST MILES TOTAL PROJECT	SHEET No.	TOTAL SHEETS
03	But	70	24.0/24.5	40	123

Kris M. Albers 8-11-14
REGISTERED CIVIL ENGINEER DATE

8-11-14
PLANS APPROVAL DATE

REGISTERED PROFESSIONAL ENGINEER
KRIS M. ALBERS
No. 49986
Exp. 6-30-15
CIVIL
STATE OF CALIFORNIA

THE STATE OF CALIFORNIA OR ITS OFFICERS OR AGENTS SHALL NOT BE RESPONSIBLE FOR THE ACCURACY OR COMPLETENESS OF SCANNED COPIES OF THIS PLAN SHEET.

REMOVE YELLOW THERMOPLASTIC TRAFFIC STRIPE (HAZARDOUS WASTE)

	Location	DETAIL 19	Detail 6
STAGE 2	Sta "B1" 520+65 TO "B1" 525+40	475	
STAGE 2	Sta "B1" 525+40 TO "B1" 550+00		2460
SUBTOTAL		475	2460
TOTAL		2935	

PORTABLE CHANGEABLE MESSAGE SIGN

LOCATION	FACING DIRECTION	LC	MI	EACH
ROUTE 70	WB		X	1
ROUTE 70	EB		X	1
DURHAM PENTZ Rd	EB		X	1
PENTZ Rd	SB		X	1
LANE CLOSURES		X		2
TOTAL				6

NOTES:

1. EXACT PCMS LOCATIONS TO BE DETERMINED BY THE ENGINEER.
2. FOR ADDITIONAL PCMS INFORMATION, SEE MOTORIST INFORMATION PLAN.
3. LC = LANE CLOSURE.
4. MI = MOTORIST INFORMATION PLAN.

REMOVE THERMOPLASTIC TRAFFIC STRIPE

	Location	Direction	Detail 27B
STAGE 2	Sta "B1" 526+15 TO "B1" 544+85	FWBT	1870
	Sta "B1" 526+15 TO "B1" 544+85	FEBT	1870
	TOTAL		3740

TYPE III BARRICADE - TRAFFIC PLASTIC DRUM

STAGE	TYPE III BARRICADE		TRAFFIC PLASTIC DRUM	
	FURNISH	INSTALL	FURNISH	INSTALL
	EA		EA	
2	6	6	13	13
3	16	22	54	67
4	0	6	0	13
FROM SHEET M1-2	19	19		
TOTAL	41	———	67	———

APPROVED FOR TRAFFIC HANDLING WORK ONLY

TRAFFIC HANDLING QUANTITIES

THQ-2

STATE OF CALIFORNIA - DEPARTMENT OF TRANSPORTATION
Caltrans
TRAFFIC

FUNCTIONAL SUPERVISOR: SERGIO ACEVES
CALCULATED-DESIGNED BY: KRIS ALBERS
CHECKED BY: JACK KEMMERLY
REVISED BY
DATE REVISED

LAST REVISION 07-28-14
DATE PLOTTED => 20-OCT-2014
TIME PLOTTED => 13:49

Dist	COUNTY	ROUTE	POST MILES TOTAL PROJECT	SHEET No.	TOTAL SHEETS
03	But	70	24.0/24.5	41	123

M. A. Panchesson 8-11-14
REGISTERED CIVIL ENGINEER DATE

8-11-14
PLANS APPROVAL DATE

REGISTERED PROFESSIONAL ENGINEER
M.A. PANCHESSON
No. 44125
Exp. 06-30-15
CIVIL
STATE OF CALIFORNIA

THE STATE OF CALIFORNIA OR ITS OFFICERS OR AGENTS SHALL NOT BE RESPONSIBLE FOR THE ACCURACY OR COMPLETENESS OF SCANNED COPIES OF THIS PLAN SHEET.

NOTE: SEE "STAGE CONSTRUCTION" PLANS.

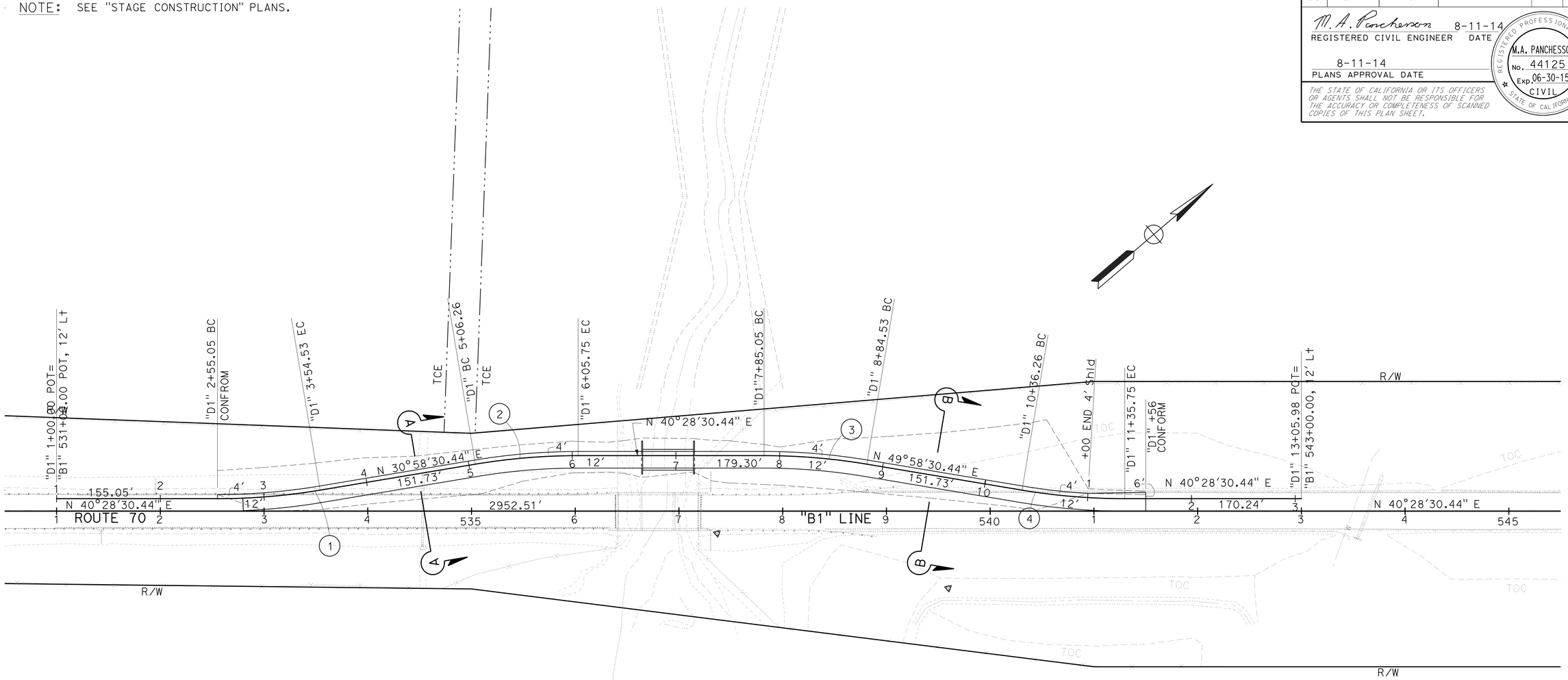

CURVE DATA

No. (R)	R	Δ	T	L
1	600'	09°30'00.00"	49.86'	99.48'
2	600'	09°29'59.98"	49.86'	99.48'
3	600'	09°29'59.98"	49.86'	99.48'
4	600'	09°30'00.00"	49.86'	99.48'

APPROVED FOR DETOUR CONSTRUCTION WORK ONLY

DETOUR PLAN

SCALE: 1" = 50'

DE-1

STATE OF CALIFORNIA - DEPARTMENT OF TRANSPORTATION
Caltrans
DESIGN

FUNCTIONAL SUPERVISOR: ALI KIANI
CALCULATED-DESIGNED BY: DAVID ROBERTS
CHECKED BY: MIKE PANCHESSON
REVISED BY
DATE REVISED

LAST REVISION 00-00-00
DATE PLOTTED => 20-OCT-2014
TIME PLOTTED => 13:49

Dist	COUNTY	ROUTE	POST MILES TOTAL PROJECT	SHEET No.	TOTAL SHEETS
03	But	70	24.0/24.5	42	123

M. A. Panchesson 8-11-14
REGISTERED CIVIL ENGINEER DATE

8-11-14
PLANS APPROVAL DATE

REGISTERED PROFESSIONAL ENGINEER
M.A. PANCHESSON
No. 44125
Exp. 06-30-15
CIVIL
STATE OF CALIFORNIA

THE STATE OF CALIFORNIA OR ITS OFFICERS OR AGENTS SHALL NOT BE RESPONSIBLE FOR THE ACCURACY OR COMPLETENESS OF SCANNED COPIES OF THIS PLAN SHEET.

NOTES:

1. SEE "STAGE CONSTRUCTION" PLANS.
2. SEE "DETOUR" PLAN SHEET DE-1 FOR SECTION LOCATIONS.
3. FOR EXISTING STRUCTURAL SECTION OF ROUTE 70, SEE "TYPICAL SECTIONS" PLANS.

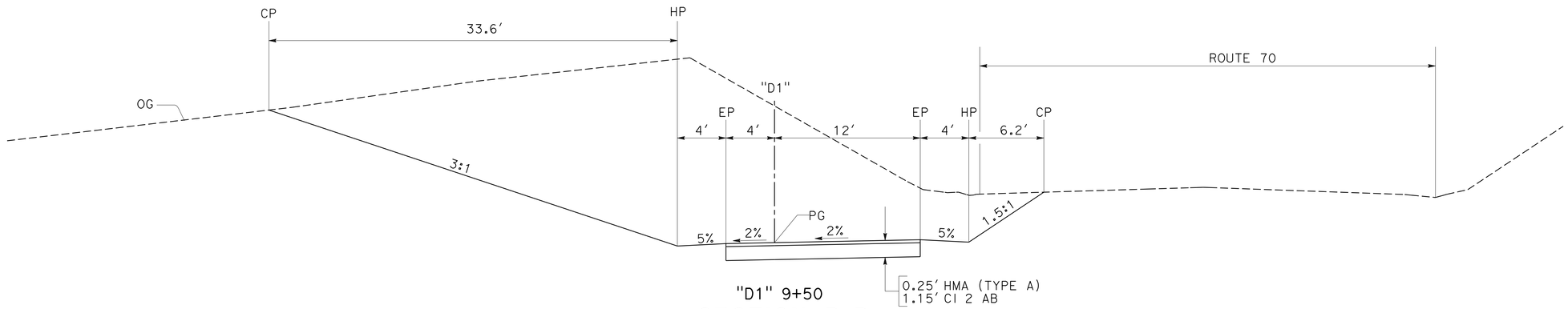

"D1" 9+50
SECTION B-B

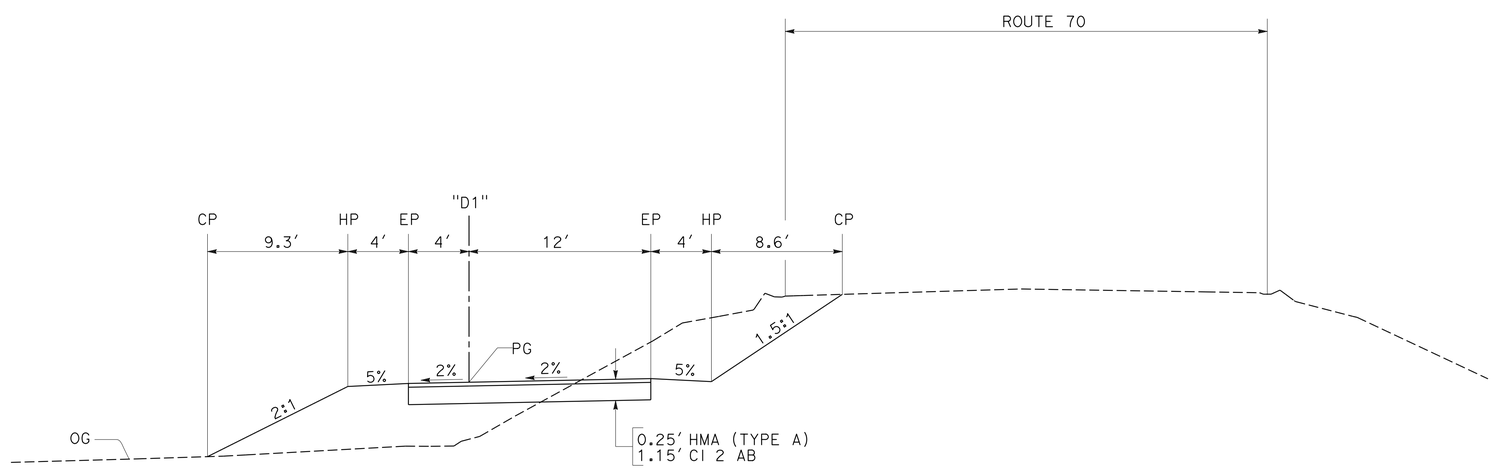

"D1" 4+50
SECTION A-A

APPROVED FOR DETOUR CONSTRUCTION WORK ONLY

SECTIONS
DETOUR PLAN
NO SCALE
DE-2

STATE OF CALIFORNIA - DEPARTMENT OF TRANSPORTATION
Caltrans
DESIGN

FUNCTIONAL SUPERVISOR: ALI KIANI
CALCULATED-DESIGNED BY: DAVID ROBERTS
CHECKED BY: DON WEHRLY
REVISED BY
DATE REVISED

LAST REVISION 00-00-00
DATE PLOTTED => 20-OCT-2014
TIME PLOTTED => 13:49

Dist	COUNTY	ROUTE	POST MILES TOTAL PROJECT	SHEET No.	TOTAL SHEETS
03	But	70	24.0/24.5	43	123

M. A. Panchesson 8-11-14
REGISTERED CIVIL ENGINEER DATE

8-11-14
PLANS APPROVAL DATE

REGISTERED PROFESSIONAL ENGINEER M.A. PANCHESSON No. 44125 Exp. 06-30-15 CIVIL STATE OF CALIFORNIA

THE STATE OF CALIFORNIA OR ITS OFFICERS OR AGENTS SHALL NOT BE RESPONSIBLE FOR THE ACCURACY OR COMPLETENESS OF SCANNED COPIES OF THIS PLAN SHEET.

NOTES:

1. THE HORIZONTAL DATUM USED IS NAD 1983 AND VERTICAL DATUM USED IS NAVD 1988.
2. PROFILE GRADE ON TOP OF THE HMA Pvmt SURFACE.

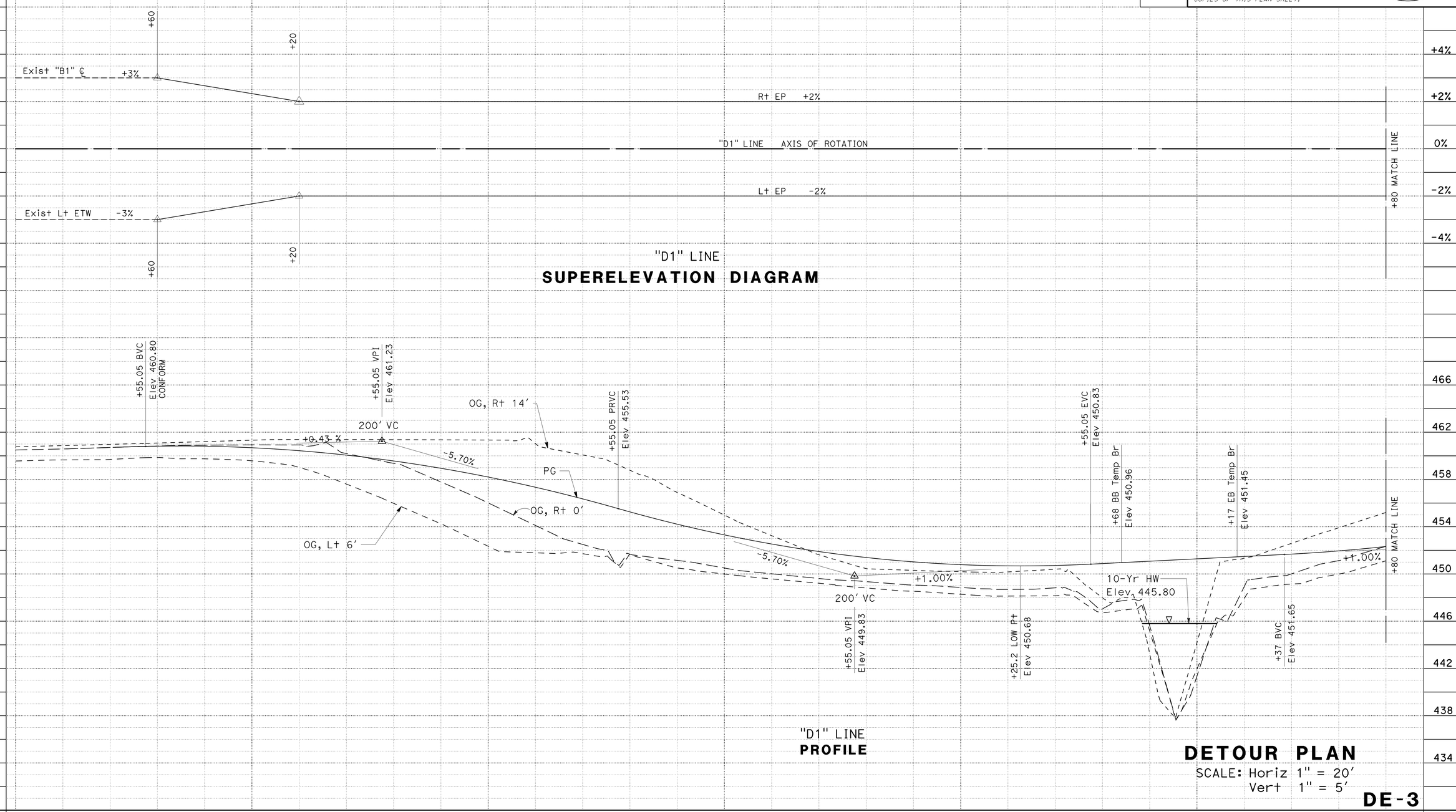

REVISED BY | DATE REVISED
DAVID ROBERTS | MIKE PANCHESSON
CALCULATED-DESIGNED BY | CHECKED BY
FUNCTIONAL SUPERVISOR
ALI KIANI
STATE OF CALIFORNIA - DEPARTMENT OF TRANSPORTATION
DESIGN
Caltrans

DATE PLOTTED => 20-OCT-2014
TIME PLOTTED => 13:49
LAST REVISION 06-00-00

Dist	COUNTY	ROUTE	POST MILES TOTAL PROJECT	SHEET No.	TOTAL SHEETS
03	But	70	24.0/24.5	44	123

M. A. Panchesson 8-11-14
REGISTERED CIVIL ENGINEER DATE

8-11-14
PLANS APPROVAL DATE

REGISTERED PROFESSIONAL ENGINEER M.A. PANCHESSON No. 44125 Exp. 06-30-15 CIVIL STATE OF CALIFORNIA

THE STATE OF CALIFORNIA OR ITS OFFICERS OR AGENTS SHALL NOT BE RESPONSIBLE FOR THE ACCURACY OR COMPLETENESS OF SCANNED COPIES OF THIS PLAN SHEET.

NOTES:

1. THE HORIZONTAL DATUM USED IS NAD 1983 AND VERTICAL DATUM USED IS NAVD 1988.
2. PROFILE GRADE ON TOP OF THE HMA Pvmt SURFACE.

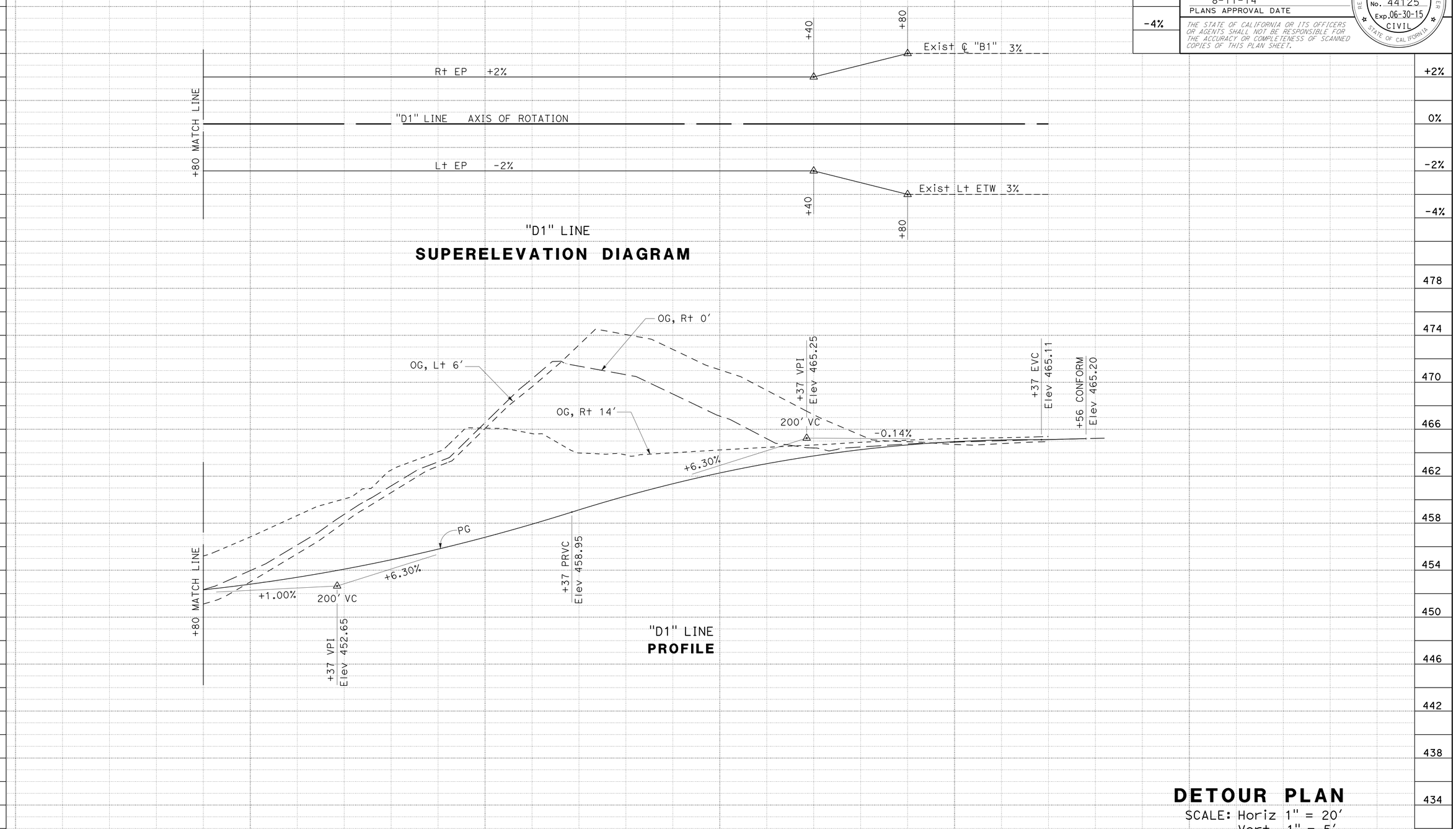

DETOUR PLAN

SCALE: Horiz 1" = 20'
Vert 1" = 5'

DE-4

STATION	2	8	9	10+00	11	12	TOTAL
CY Exc		4446					
CY Emb		2					

STATE OF CALIFORNIA - DEPARTMENT OF TRANSPORTATION
Caltrans® DIVISION OF ENGINEERING

FUNCTIONAL SUPERVISOR: ALI KIANI
CALCULATED-DESIGNED BY: DAVID ROBERTS
CHECKED BY: MIKE PANCHESSON
REVISED BY / DATE REVISED

LAST REVISION 11-02-12
DATE PLOTTED => 20-OCT-2014
TIME PLOTTED => 13:49

Dist	COUNTY	ROUTE	POST MILES TOTAL PROJECT	SHEET No.	TOTAL SHEETS
03	But	70	24.0/24.5	45	123

Kris M. Albers 8-11-14
REGISTERED CIVIL ENGINEER DATE

8-11-14
PLANS APPROVAL DATE

REGISTERED PROFESSIONAL ENGINEER
KRIS M. ALBERS
No. 49986
Exp. 6-30-15
CIVIL
STATE OF CALIFORNIA

THE STATE OF CALIFORNIA OR ITS OFFICERS OR AGENTS SHALL NOT BE RESPONSIBLE FOR THE ACCURACY OR COMPLETENESS OF SCANNED COPIES OF THIS PLAN SHEET.

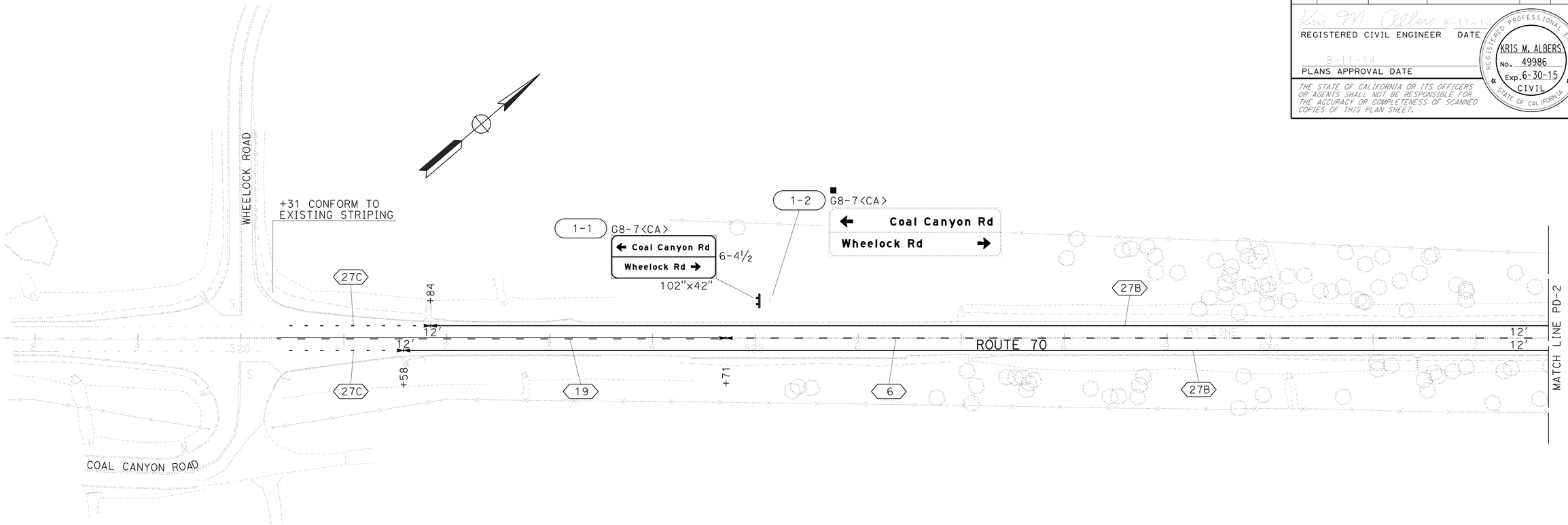

LEGEND

- LIMIT OF STRIPING PATTERN
- CHANGE IN STRIPING PATTERN
- (No.) PAVEMENT DELINEATION DETAIL NUMBER
- OBJECT MARKER (TYPE L-1)
- HP HIGHWAY POST MARKER
- (Sht-No.) ROADSIDE SIGN NUMBER
- <CA> CALIFORNIA SIGN CODE
- ■ REMOVE ROADSIDE SIGN

NOTES:

1. ALL EXISTING SIGNS NOT SHOWN FOR REMOVAL SHALL REMAIN IN PLACE.
2. ALL SIGN CODES SHOWN ARE FEDERAL SIGN CODES UNLESS OTHERWISE DESIGNATED AS CALIFORNIA SIGN CODES.

PAVEMENT DELINEATION AND SIGN PLAN

SCALE: 1"=50'

PD-1

APPROVED FOR PAVEMENT DELINEATION AND SIGN WORK ONLY

STATE OF CALIFORNIA - DEPARTMENT OF TRANSPORTATION
Caltrans
TRAFFIC

FUNCTIONAL SUPERVISOR: SERGIO ACEVES
CALCULATED-DESIGNED BY: JACK KEMMERLY
CHECKED BY: KRIS ALBERS
REVISED BY
DATE REVISED

LAST REVISION 07-28-14
DATE PLOTTED => 20-OCT-2014
TIME PLOTTED => 13:49

Dist	COUNTY	ROUTE	POST MILES TOTAL PROJECT	SHEET No.	TOTAL SHEETS
03	But	70	24.0/24.5	46	123

Kris M. Albers 8-11-14
REGISTERED CIVIL ENGINEER DATE

8-11-14
PLANS APPROVAL DATE

REGISTERED PROFESSIONAL ENGINEER
KRIS M. ALBERS
No. 49986
Exp. 6-30-15
CIVIL
STATE OF CALIFORNIA

THE STATE OF CALIFORNIA OR ITS OFFICERS OR AGENTS SHALL NOT BE RESPONSIBLE FOR THE ACCURACY OR COMPLETENESS OF SCANNED COPIES OF THIS PLAN SHEET.

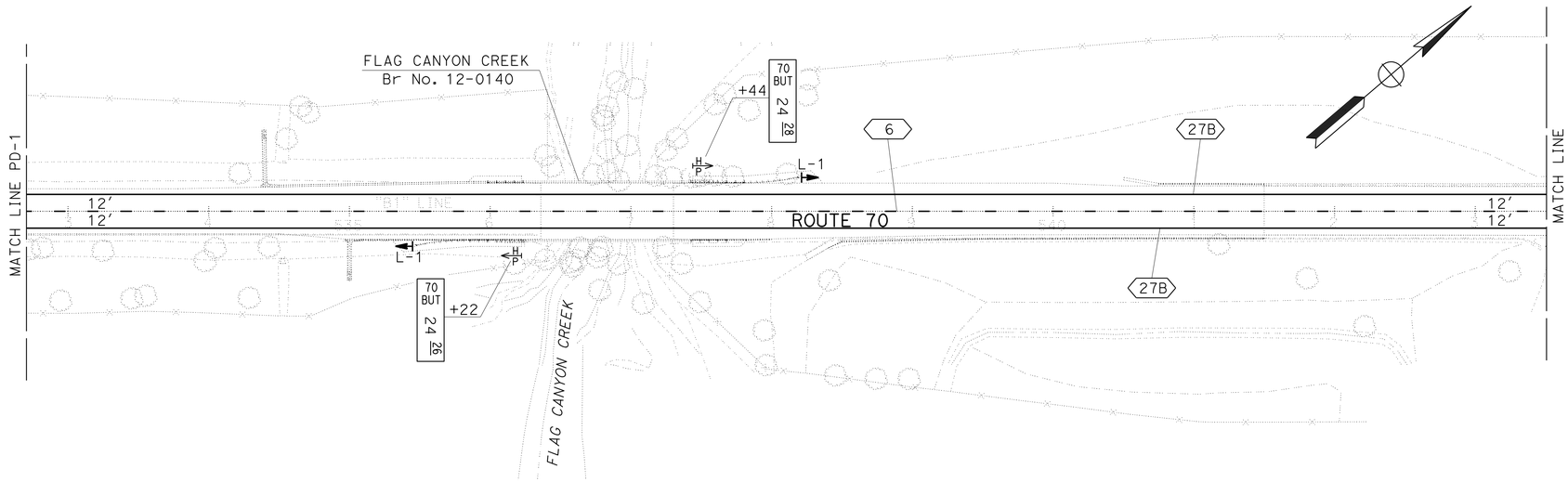

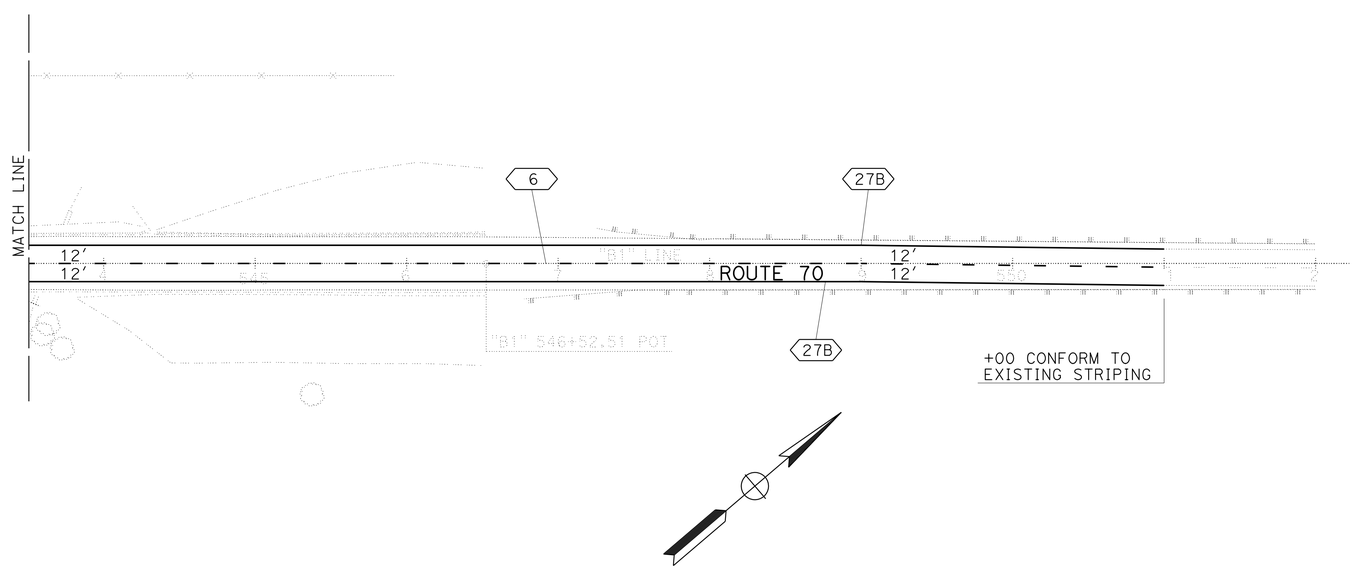

PAVEMENT DELINEATION AND SIGN PLAN

SCALE: 1"=50'

PD-2

APPROVED FOR PAVEMENT DELINEATION AND SIGN WORK ONLY

STATE OF CALIFORNIA - DEPARTMENT OF TRANSPORTATION
Caltrans
TRAFFIC

FUNCTIONAL SUPERVISOR: SERGIO ACEVES
CALCULATED-DESIGNED BY: JACK KEMMERLY
CHECKED BY: KRIS ALBERS
REVISED BY
DATE REVISED

LAST REVISION 07-28-14
DATE PLOTTED => 20-OCT-2014
TIME PLOTTED => 13:49

Dist	COUNTY	ROUTE	POST MILES TOTAL PROJECT	SHEET No.	TOTAL SHEETS
03	But	70	24.0/24.5	47	123

Kris M. Albers 8-11-14
REGISTERED CIVIL ENGINEER DATE

8-11-14
PLANS APPROVAL DATE

REGISTERED PROFESSIONAL ENGINEER
KRIS M. ALBERS
No. 49986
Exp. 6-30-15
CIVIL
STATE OF CALIFORNIA

THE STATE OF CALIFORNIA OR ITS OFFICERS OR AGENTS SHALL NOT BE RESPONSIBLE FOR THE ACCURACY OR COMPLETENESS OF SCANNED COPIES OF THIS PLAN SHEET.

PAVEMENT DELINEATION QUANTITIES

LOCATION/STATION	4" THERMOPLASTIC TRAFFIC STRIPE (EWNV)		4" THERMOPLASTIC TRAFFIC STRIPE (BROKEN 36-12) (EWNV)		4" THERMOPLASTIC TRAFFIC STRIPE (BROKEN 12-3) (EWNV)	PAVEMENT MARKER (RETROREFLECTIVE)		OBJECT MARKER (TYPE L-1)	HIGHWAY POST MARKER
	DETAIL 19	DETAIL 27B	DETAIL 6	DETAIL 19	DETAIL 27C	TYPE D	TYPE H		
	LINEAR FOOT		LINEAR FOOT		LINEAR FOOT	EACH		EACH	EACH
"B1" 520+31 TO 521+58	127			127	254	4	8		
"B1" 521+58 TO 521+84	26	26		26	26		1		
"B1" 521+84 TO 524+71	287	574		287		6	12		
"B1" 524+71 TO 551+00		5,258	2,629			56			
"B1" 535+47 R+ FEBT								1	
"B1" 536+22 R+ FEBT									1
"B1" 537+44 L+ FWBT									1
"B1" 538+19 L+ FWBT								1	
SUBTOTAL	440	5,858	2,629	440		66	21		
TOTAL	6,298		3,069		280	87		2	2

EWNV = ENHANCED WET NIGHT VISIBILITY

STATE OF CALIFORNIA - DEPARTMENT OF TRANSPORTATION
Caltrans
TRAFFIC

FUNCTIONAL SUPERVISOR: SERGIO ACEVES
CALCULATED-DESIGNED BY: JACK KEMMERLY
CHECKED BY: KRIS ALBERS
REVISED BY
DATE REVISED

PAVEMENT DELINEATION QUANTITIES

PDQ-1

LAST REVISION 07-28-14
DATE PLOTTED => 20-OCT-2014
TIME PLOTTED => 13:49

Dist	COUNTY	ROUTE	POST MILES TOTAL PROJECT	SHEET No.	TOTAL SHEETS
03	But	70	24.0/24.5	48	123

REGISTERED CIVIL ENGINEER DATE 8-11-14

PLANS APPROVAL DATE 8-11-14

REGISTERED PROFESSIONAL ENGINEER KRIS M. ALBERS No. 49986 Exp. 6-30-15 CIVIL STATE OF CALIFORNIA

THE STATE OF CALIFORNIA OR ITS OFFICERS OR AGENTS SHALL NOT BE RESPONSIBLE FOR THE ACCURACY OR COMPLETENESS OF SCANNED COPIES OF THIS PLAN SHEET.

ROADSIDE SIGN PANEL QUANTITIES

SIGN CODE FEDERAL	SIGN CODE CALIFORNIA	SIGN MESSAGE/DESCRIPTION	PANEL SIZE L x D INCHES	PANEL AREA SQFT	NUMBER OF PANELS	BACKGROUND SHEETING COLOR	BACKGROUND RETROREFLECTIVE ASTM TYPE	LEGEND SHEETING COLOR	LEGEND RETROREFLECTIVE ASTM TYPE	PROTECTIVE OVERLAY PREMIUM	FURNISH SINGLE SHEET ALUMINUM SIGN (0.080"-FRAMED) SQFT
	G8-7	SEE SIGN NUMBER 1-1	102 x 42	29.75	1	GREEN	III	WHITE	IX		29.75
TOTAL											29.75

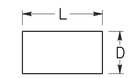

L = LENGTH OF PANEL
D = DEPTH OF PANEL

ROADSIDE SIGN QUANTITIES

SIGN NUMBER (SHT-NO.)	SIGN CODE FEDERAL	SIGN CODE CALIFORNIA	PANEL SIZE INCHES	"C" DIM IN FEET	POST SIZE AND LENGTH 4"x6"	ROADSIDE SIGN TWO POST EA	REMOVE ROADSIDE SIGN EA
1-1		G8-7	120 x 42	5	14'	1	
1-2		G8-7					1
TOTAL						1	1

NOTES:

1. EXACT LOCATION AND POSITION OF ROADSIDE SIGN TO BE DETERMINED BY THE ENGINEER.
2. POST LENGTH GIVEN IS APPROXIMATE.
3. "C" DIM = VERTICAL CLEARANCE EP TO BOTTOM OF SIGN PANEL.

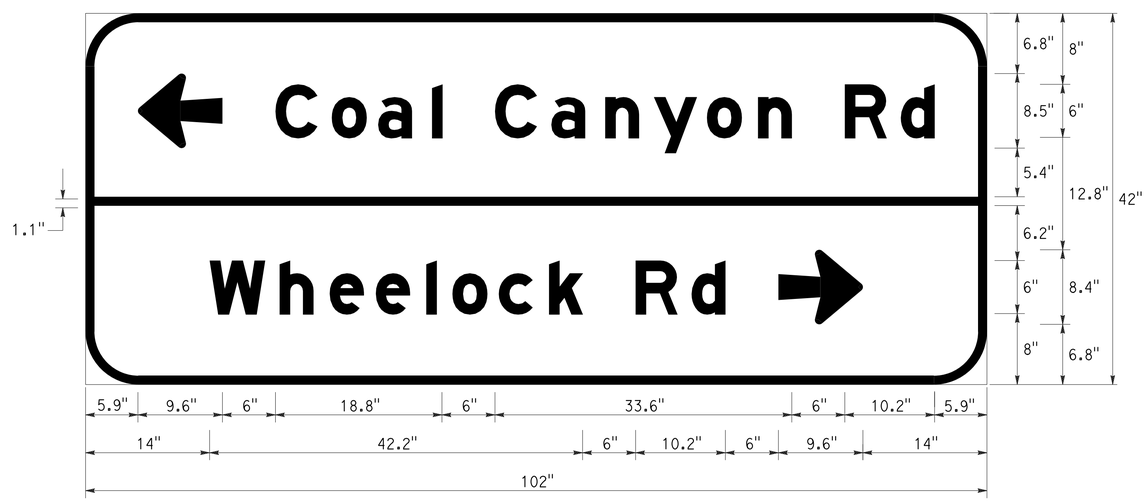

1" BORDER WITH 6" RADIUS
ARROW 6UC-1L - 9.6" 180°; "Coal Canyon Rd" E Mod
"Wheelock Rd" E Mod; ARROW 6UC-1L - 9.6" 0°

1-1 G8-7<CA>
Sta "B1" 525+00 FWBT

SIGN QUANTITIES

SQ-1

STATE OF CALIFORNIA - DEPARTMENT OF TRANSPORTATION
Caltrans
TRAFFIC

FUNCTIONAL SUPERVISOR: SERGIO ACEVES
CALCULATED-DESIGNED BY: JACK KEMMERLY
CHECKED BY: KRIS ALBERS
REVISED BY
DATE REVISED

LAST REVISION 07-28-14
DATE PLOTTED => 20-OCT-2014
TIME PLOTTED => 13:49

Dist	COUNTY	ROUTE	POST MILES TOTAL PROJECT	SHEET No.	TOTAL SHEETS
03	But	70	24.0/24.5	49	123

M. A. Panchesson 8-11-14
REGISTERED CIVIL ENGINEER DATE

8-11-14
PLANS APPROVAL DATE

REGISTERED PROFESSIONAL ENGINEER M.A. PANCHESSON No. 44125 Exp. 06-30-15 CIVIL STATE OF CALIFORNIA

THE STATE OF CALIFORNIA OR ITS OFFICERS OR AGENTS SHALL NOT BE RESPONSIBLE FOR THE ACCURACY OR COMPLETENESS OF SCANNED COPIES OF THIS PLAN SHEET.

ROADWAY EXCAVATION

STAGE	LINE	STATION	L+/R+	ROADWAY EXCAVATION	(N) EMBANKMENT
				CY	CY
2	"D1"	2+55 TO 6+68		367	705
2	"D1"	7+17 TO 11+56		4533	53
3	"B1"	526+50 TO 536+36	R+	776	1969
3	"B1"	537+30 TO 541+50	R+	566	200
3	"A1"	0+00 TO 0+78		303	51
3	"A2"	0+21 TO 0+99		472	40
4	"B1"	526+50 TO 541+36	L+	670	3914
4	"B1"	537+30 TO 541+50	L+	541	1107
4	"A1"	0+78 TO 0+99		38	78
4	"A2"	0+00 TO 0+21		72	38
		TOTAL		8338	

(N) - NOT A SEPARATE PAY ITEM, FOR INFORMATION ONLY.

FENCE

STATION "B1" LINE	L+/R+	REMOVE FENCE	TEMPORARY FENCE (TYPE BW)	FENCE (TYPE WM AND BW)
		LF	LF	LF
534+72 TO 536+42	R+	190		
536+36 TO 536+42	L+	68		
537+18 TO 537+81	L+	105		
537+18 TO 537+97	R+	126		
534+72 TO 537+97	R+		327	
536+41 TO 537+81	L+		146	
Temp FENCE (Type BW)		473		
534+72 TO 536+36	R+			214
536+36	L+			65
537+30 TO 537+81	L+			96
537+30 TO 537+97	R+			120
TOTAL		962	473	495

REMOVE OVERSIDE DRAINS

STATION	L+/R+	REMOVE OVERSIDE DRAIN
		EA
"B1" 531+43	R+	1
"B1" 531+96	L+	1
"B1" 537+30	L+	1
"B1" 537+30	R+	1
TOTAL		4

TEMPORARY RAILING (TYPE K)

STAGE	LINE	STATION	L+/R+	Temp RAILING (TYPE K)	TEMPORARY CRASH CUSHION MODULE	TEMPORARY TRAFFIC SCREEN
				LF	EA	LF
2	"B1"	528+50 TO 542+50		1400	28	
3	"D1"	1+94 TO 9+73	L+	720*		
3	"D1"	5+53 TO 8+36	R+	220*		
4	"B1"	528+50 TO 542+50		1400	28	
3	"D1"	6+34.3 TO 6+64.3	R+			30*
3	"D1"	7+24.3 TO 7+54.3	R+			30*
			TOTAL	3740	56	60

* SEE STRUCTURE PLANS FOR ADDITIONAL QUANTITIES

TEMPORARY FENCE (TYPE ESA)

LOCATION	LF
R+ "B1" STA 537+00	65
TOTAL	65

ROCK SLOPE PROTECTION

STATION	RSP (No. 2, METHOD B)	RSP FABRIC
	(CY)	(SQYD)
FROM SHEET DQ-1	9.41	37.0
FROM SHEET C-9	2.79	18.4
TOTAL	12.20	55.4

CLASS 2 AGGREGATE BASE

STAGE	LINE	STATION	L+/R+	QUANTITY
				CY
2	"D1"	2+55 TO 11+56		585
3	"B1"	529+50 TO 541+50	R+	1204
4	"B1"	529+50 TO 541+50	L+	1270
		TOTAL		3059

SUMMARY OF QUANTITIES

Q-1

REVISED BY | DATE REVISED
DON WEHRLY | MIKE PANCHESSON
CALCULATED-DESIGNED BY | CHECKED BY
FUNCTIONAL SUPERVISOR | ALI KIANI
STATE OF CALIFORNIA - DEPARTMENT OF TRANSPORTATION
Caltrans
DESIGN

LAST REVISION 06-23-14 | DATE PLOTTED => 20-OCT-2014 | TIME PLOTTED => 13:49

Dist	COUNTY	ROUTE	POST MILES TOTAL PROJECT	SHEET No.	TOTAL SHEETS
03	But	70	24.0/24.5	50	123

M. A. Panchesson 8-11-14
REGISTERED CIVIL ENGINEER DATE

8-11-14
PLANS APPROVAL DATE

REGISTERED PROFESSIONAL ENGINEER M.A. PANCHESSON No. 44125 Exp. 06-30-15 CIVIL STATE OF CALIFORNIA

THE STATE OF CALIFORNIA OR ITS OFFICERS OR AGENTS SHALL NOT BE RESPONSIBLE FOR THE ACCURACY OR COMPLETENESS OF SCANNED COPIES OF THIS PLAN SHEET.

GUARDRAIL AND WOOD WASTE

STATION "B1" LINE	LOCATION	REMOVE GUARDRAIL	MIDWEST GUARDRAIL SYSTEM (WOOD POST)	VEGETATION CONTROL (MINOR CONCRETE)	TRANSITION RAILING (TYPE WB-31)	END ANCHOR ASSEMBLY (TYPE SFT)	END CAP (TYPE A)	ALTERNATIVE FLARED TERMINAL SYSTEM	TREATED WOOD WASTE		NOTES
		(LF)	(LF)	(SQYD)	(EA)	(EA)	(EA)	(EA)	(LB)		
529+80 TO 536+30	Lt	650									
529+80 TO 536+30	Rt	650									
535+25 TO 536+19	Rt		12.5	60.90	1			1			
535+79 TO 536+19	Lt		25.0	20.15		1	1				
537+48 TO 538+24	Lt		12.5	60.91	1			1			
537+48 TO 547+73	Rt		25.0	20.15		1	1				
537+28 TO 539+16	Lt	188									
537+28 TO 538+91	Rt	163									
529+80 TO 539+15	Lt & Rt								4700		
FROM ROADSIDE SIGN REMOVAL									200		
TOTAL		1651	75.0	162.11	2	2	2	2	4900		

WATER POLLUTION CONTROL

BMP	QUANTITY	UNIT OF MEASURE
TEMPORARY EROSION CONTROL BLANKET	520	SQYD
TEMPORARY DRAINAGE INLET PROTECTION	1	EA
TEMPORARY SILT FENCE	1440	LF
TEMPORARY CONSTRUCTION ENTRANCE	4	EA
TEMPORARY HYDRAULIC MULCH	4646	SQYD
TEMPORARY COVER	4000	SQYD
TEMPORARY LARGE SEDIMENT BARRIER	1650	LF
TEMORARY FIBER ROLL	2000	LF
TEMPORARY GRAVEL BAG BERM	484	LF

HOT MIX ASPHALT DIKES

STATION "B1" LINE	Lt/Rt	PLACE HMA DIKE				MINOR HMA
		TYPE A	TYPE C	TYPE E	TYPE F	
		LF	LF	LF	LF	TON
534+50 TO 535+93	Lt			143		3.9
535+15 TO 535+81	Rt		76			0.5
535+81 TO 536+18	Rt				37	0.5
535+93 TO 536+18	Lt				25	0.3
537+49 TO 537+86	Lt		37			0.3
537+49 TO 538+05	Rt		56			0.5
538+50 TO 541+50	Rt	300				8.5
540+50 TO 541+50	Lt	100				3.5
SUBTOTAL						18.0*
TOTAL		400	169	143	62	

* SEE MINOR HMA TABLE THIS SHEET

HOT MIX ASPHALT SAFETY EDGE

SHEET No.	STATION "B1" LINE	Lt/Rt	(N) TOTAL THICKNESS OF SAFETY EDGE	(N) LENGTH OF SAFETY EDGE	HOT MIX ASPHALT (TYPE A)
			FT	LF	TON
L1 TO L2	"B1" 529+50 TO 534+37	Lt	0.5	787	13.4
L1 TO L2	"B1" 529+50 TO 534+93	Rt	0.5	543	9.2
L2	"B1" 537+87 TO 538+38	Rt	0.5	51	0.9
L2	"B1" 538+38 TO 541+50	Lt	0.5	312	5.3
SUBTOTAL					28.8

(N) NOT A PAY ITEM. FOR INFORMATION ONLY.
* SEE HMA (TYPE A) TABLE THIS SHEET

COLD PLANE ASPHALT CONCRETE PAVEMENT

LOCATION	SQYD
"B1" STA 526+50 TO 527+00	180
TOTAL	180

SLURRY SEAL

STATION	SLURRY SEAL (TYPE I)
	(TON)
520+31 TO 526+50	17.85
541+50 TO 551+00	23.95
	41.80

HOT MIX ASPHALT OVERSIDE DRAINS AND GUTTERS

STATION "B1" LINE	Lt/Rt	MINOR HMA	PLACE HMA (Misc AREA)
		TON	SQYD
534+40	Lt	3.6	14.5
535+05	Rt	2.5	10.6
538+46	Rt	2.3	11.1
538+50 TO 541+50	Rt	20.5	116.7
540+50 TO 540+75	Lt	2.6	16.0
540+75 TO 540+50	Lt	2.9	14.4
SUBTOTAL		34.4*	
TOTAL			183.2

*SEE MINOR HMA TABLE THIS SHEET

HOT MIX ASPHALT (TYPE A) AND TACK COAT

LOCATION	STAGE	HMA (TYPE A)	TACK COAT
		(TON)	(TON)
"D1" 2+55 TO 11+56	2	267	0.12
"B1" 529+50 TO 541+50	3	559	0.16
"B1" 529+50 TO 541+50	4	559	0.16
"B1" 526+50 TO 541+50	5	485	0.72
FROM HMA SAFETY EDGE		28.8	
TOTAL		1898.8	1.16

MINOR HOT MIX ASPHALT

LOCATION	TON
FROM DIKES	18.0
FROM OVERSIDE DRAINS & GUTTERS	34.4
TOTAL	52.4

SUMMARY OF QUANTITIES

Q-2

STATE OF CALIFORNIA - DEPARTMENT OF TRANSPORTATION
DESIGN
FUNCTIONAL SUPERVISOR: ALI KIANI
CALCULATED-DESIGNED BY: DON WEHRLY
CHECKED BY: MIKE PANCHESSON
REVISED BY
DATE REVISED

LAST REVISION 00-00-00
DATE PLOTTED => 20-OCT-2014
TIME PLOTTED => 13:49

Dist	COUNTY	ROUTE	POST MILES TOTAL PROJECT	SHEET No.	TOTAL SHEETS
03	But	70	24.0/24.5	51	123

LICENSED LANDSCAPE ARCHITECT

8-11-14
PLANS APPROVAL DATE

LICENSED LANDSCAPE ARCHITECT JANE H. DONOHOE No. 5824 Signature 08-31-14 Renewal Date 08-11-14 Date STATE OF CALIFORNIA

THE STATE OF CALIFORNIA OR ITS OFFICERS OR AGENTS SHALL NOT BE RESPONSIBLE FOR THE ACCURACY OR COMPLETENESS OF SCANNED COPIES OF THIS PLAN SHEET.

EROSION CONTROL (TYPE 1)

SEQUENCE	ITEM DESCRIPTION	MATERIAL		APPLICATION RATE
		DESCRIPTION	TYPE	
STEP 1	COMPOST	COMPOST	MEDIUM	2" DEPTH
STEP 2	BONDED FIBER MATERIX	SEED	MIX 1	39 LB/ ACRE
		FERTILIZER	ORGANIC	1800 LB/ ACRE
		FIBER	WOOD	3600 LB/ ACRE
		TACKIFIER	MANUFACTURER RECOMMENDATION	4500 LB/ ACRE

EROSION CONTROL (TYPE 2)

SEQUENCE	ITEM DESCRIPTION	MATERIAL		APPLICATION RATE
		DESCRIPTION	TYPE	
STEP 1	COMPOST	COMPOST	MEDIUM	2" DEPTH
STEP 2	EROSION CONTROL (BONDED FIBER MATRIX)	TACKIFIER	BONDED FIBER MATERIX	500 LB/ ACRE
		SEED	MIX 1	39 LB/ ACRE
		FERTILIZER	ORGANIC	1800 LB/ ACRE
STEP 3	EROSION CONTROL (BONDED FIBER MATRIX)	TACKIFIER	BONDED FIBER MATERIX	3500 LB/ ACRE
STEP 4	ROLLED EROSION CONTROL PRODUCT (NETTING)	NETTING	TYPE B	--
		FASTENERS	ANCHOR PIN	MANUFACTURER RECOMMENDATION

EROSION CONTROL (TYPE 3)

SEQUENCE	ITEM DESCRIPTION	MATERIAL		APPLICATION RATE
		DESCRIPTION	TYPE	
STEP 1	HYDROSEED	COMPOST	FINE	2" DEPTH
		SEED	MIX 1	39 LB/ ACRE
		FIBER	WOOD	1800 LB/ ACRE
		TACKIFIER	MANUFACTURER RECOMMENDATION	3500LB/ ACRE
STEP 2	ROLLED EROSION CONTROL PRODUCT (NETTING)	NETTING	TYPE B	--
		FASTENERS	ANCHOR PIN	MANUFACTURER RECOMMENDATION

SEED MIX

SEED	BOTANICAL NAME (COMMON NAME)	PERCENT GERMINATION (MINIMUM)	POUNDS PURE LIVE SEED PER ACRE (SLOPE MEASUREMENT)
MIX 1	ACHILLEA MILLIFOLIUM[1] (WHITE YARROW)	60	1.5
	BROMUS CARINATUS[1] (CALIFORNIA BROME)	60	10
	CLARKIA ELEGANS[1] (FOOTHILL CLARKIA)	60	1
	ELYMUS GLAUCUS[1] (BLUE WILDRYE)	60	8
	ESCHOLZIA CALIFORNICA[1] (CALIFORNIA POPPY)	60	2.5
	LUPINUS BICOLOR[1] (MINIATURE LUPINE)	60	8
	NASSELLA PULCHRA[1] (PURPLE NEEDLE GRASS)	50	5
	POA SECUNDA[1] (PINE BLUE GRASS)	45	3
	TOTAL		39

[1] SEED PRODUCED INLAND NORTHERN CALIFORNIA BELOW 2000' ELEVTION ONLY.

EROSION CONTROL LEGEND

ECL-1

REVISED BY | DATE REVISED
J. DONOHOE | T. CHRIS JOHNSON
CALCULATED-DESIGNED BY | CHECKED BY
SENIOR LANDSCAPE ARCHITECT | T. CHRIS JOHNSON
STATE OF CALIFORNIA - DEPARTMENT OF TRANSPORTATION
Caltrans LANDSCAPE ARCHITECTURE

LAST REVISION 00-00-00 | DATE PLOTTED => 20-OCT-2014 | TIME PLOTTED => 13:49

Dist	COUNTY	ROUTE	POST MILES TOTAL PROJECT	SHEET No.	TOTAL SHEETS
03	But	70	24.0/24.5	52	123

LICENSED LANDSCAPE ARCHITECT

8-11-14
PLANS APPROVAL DATE

LICENSED LANDSCAPE ARCHITECT
JANE H. DONOHOE
No. 5824
Signature
08-31-14
Renewal Date
08-11-14
Date
STATE OF CALIFORNIA

THE STATE OF CALIFORNIA OR ITS OFFICERS OR AGENTS SHALL NOT BE RESPONSIBLE FOR THE ACCURACY OR COMPLETENESS OF SCANNED COPIES OF THIS PLAN SHEET.

NOTE: FOR COMPLETE RIGHT OF WAY AND ACCURATE ACCESS DATA SEE RIGHT OF WAY RECORD MAPS AT DISTRICT OFFICE.

LEGEND:

NO / X — EROSION CONTROL SHEET NUMBER / EROSION CONTROL AREA

EROSION CONTROL (TYPE 1)
SLOPES FLATTER THAN 2:1
COMPOST

EROSION CONTROL (TYPE 2)
SLOPES STEEPER THAN 2:1
COMPOST
ROLLED EROSION CONTROL PRODUCT
(NETTING)

EROSION CONTROL (TYPE 3)
BANKS
HYDROSEED
ROLLED EROSION CONTROL PRODUCT
(NETTING)

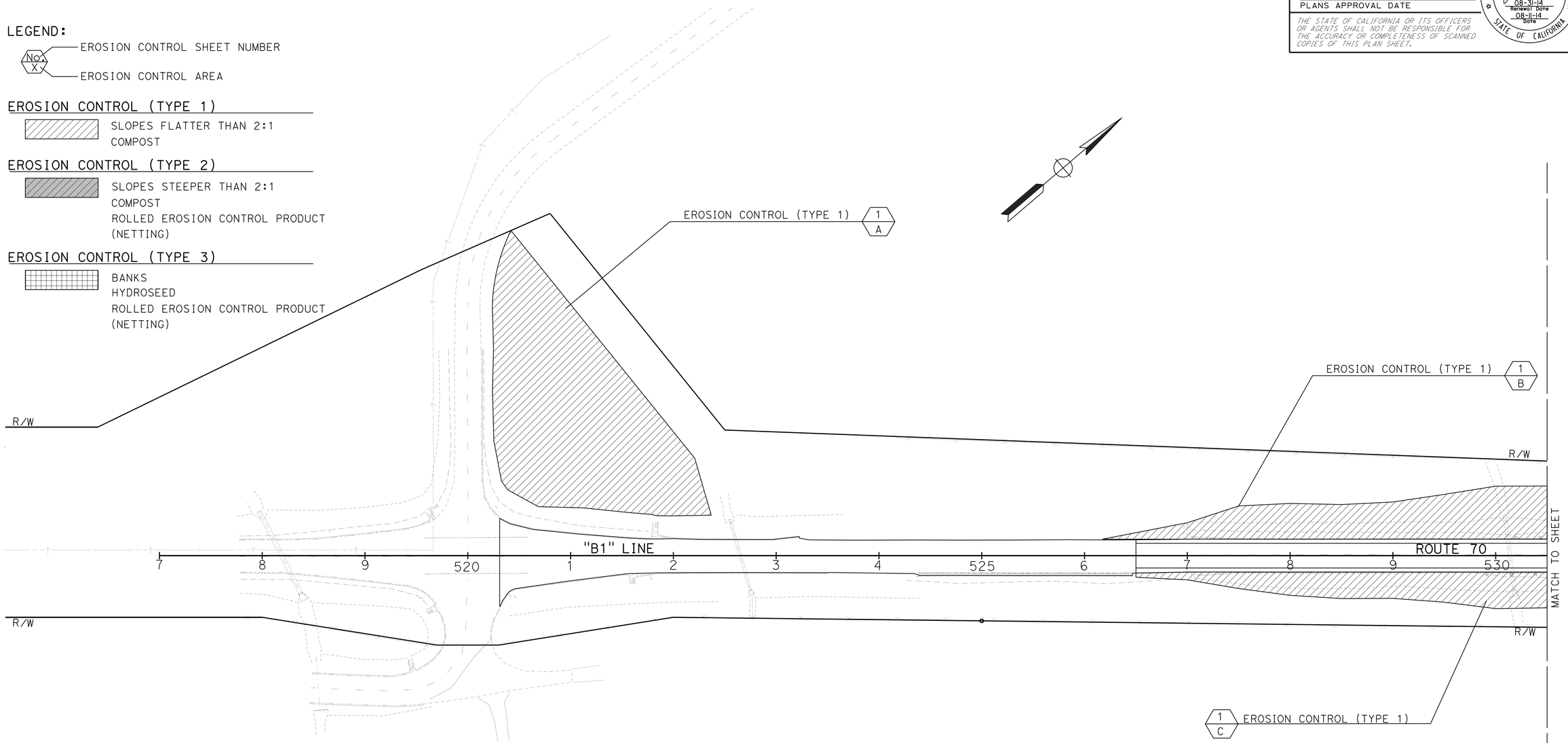

THIS PLAN ACCURATE FOR EROSION CONTROL WORK ONLY.

EROSION CONTROL PLAN

SCALE: 1" = 50'

EC-1

STATE OF CALIFORNIA - DEPARTMENT OF TRANSPORTATION
Caltrans LANDSCAPE ARCHITECTURE

SENIOR LANDSCAPE ARCHITECT: T. CHRIS JOHNSON

CALCULATED-DESIGNED BY: J. DONOHOE
CHECKED BY: T. CHRIS JOHNSON

REVISED BY / DATE REVISED

LAST REVISION 00-00-00
DATE PLOTTED => 20-OCT-2014
TIME PLOTTED => 13:49

Dist	COUNTY	ROUTE	POST MILES TOTAL PROJECT	SHEET No.	TOTAL SHEETS
03	But	70	24.0/24.5	53	123

LICENSED LANDSCAPE ARCHITECT

8-11-14
PLANS APPROVAL DATE

LICENSED LANDSCAPE ARCHITECT JAMIE H. DONOHOE No. 5824 Signature 08-31-14 Renewal Date 08-11-14 Date STATE OF CALIFORNIA

THE STATE OF CALIFORNIA OR ITS OFFICERS OR AGENTS SHALL NOT BE RESPONSIBLE FOR THE ACCURACY OR COMPLETENESS OF SCANNED COPIES OF THIS PLAN SHEET.

NOTE: FOR COMPLETE RIGHT OF WAY AND ACCURATE ACCESS DATA SEE RIGHT OF WAY RECORD MAPS AT DISTRICT OFFICE.

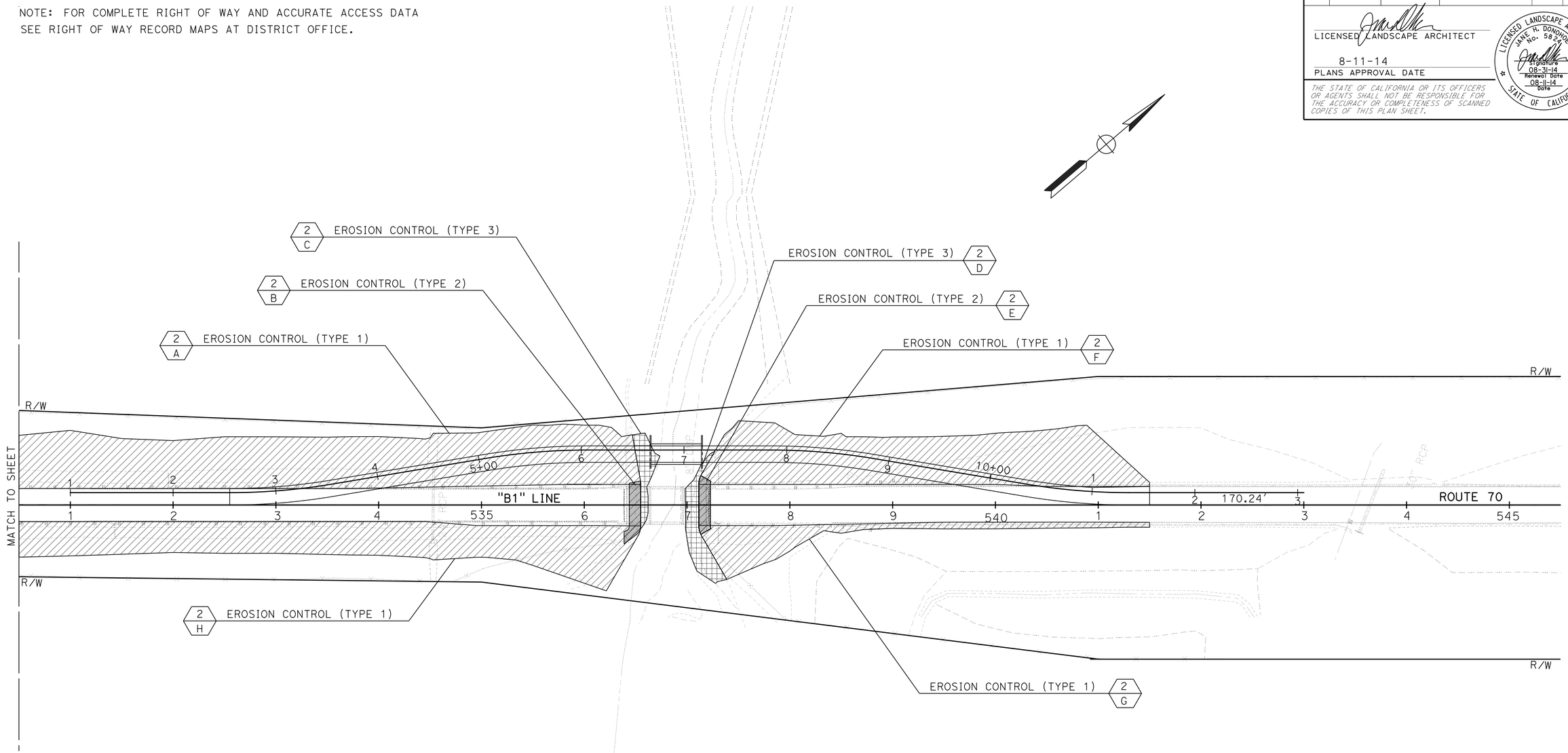

THIS PLAN ACCURATE FOR EROSION CONTROL WORK ONLY.

EROSION CONTROL PLAN

SCALE: 1" = 50'

EC-2

STATE OF CALIFORNIA - DEPARTMENT OF TRANSPORTATION
Caltrans LANDSCAPE ARCHITECTURE

SENIOR LANDSCAPE ARCHITECT: T. CHRIS JOHNSON

CALCULATED-DESIGNED BY: J. DONOHOE

CHECKED BY: T. CHRIS JOHNSON

REVISED BY | DATE REVISED

LAST REVISION 00-00-00 | DATE PLOTTED => 20-OCT-2014 | TIME PLOTTED => 13:49

Dist	COUNTY	ROUTE	POST MILES TOTAL PROJECT	SHEET No.	TOTAL SHEETS
03	But	70	24.0/24.5	54	123

LICENSED LANDSCAPE ARCHITECT

8-11-14
PLANS APPROVAL DATE

LICENSED LANDSCAPE ARCHITECT
JANE H. DONOHOE
No. 5824
Signature
08-31-14
Renewal Date
08-11-14
Date
STATE OF CALIFORNIA

THE STATE OF CALIFORNIA OR ITS OFFICERS OR AGENTS SHALL NOT BE RESPONSIBLE FOR THE ACCURACY OR COMPLETENESS OF SCANNED COPIES OF THIS PLAN SHEET.

EROSION CONTROL

SHEET	EROSION CONTROL LOCATION	DESCRIPTION	COMPOST	EROSION CONTROL (BONDED FIBER MATRIX)	HYDROSEED	ROLLED EROSION CONTROL PRODUCT (NETTING)
			SQFT	SQFT	SQFT	SQFT
EC-1	A	EC TYPE 1	32886	32886	--	--
	B	EC TYPE 1	13958	13958	--	--
	C	EC TYPE 1	9091	9091	--	--
EC-2	A	EC TYPE 1	31101	31101	--	--
	B	EC TYPE 2	635	635	--	635
	C	EC TYPE 3	--	--	1037	1037
	D	EC TYPE 3	--	--	1727	1727
	E	EC TYPE 2	601	601	--	601
	F	EC TYPE 1	20609	20609	--	--
	G	EC TYPE 1	5569	5569	--	--
	H	EC TYPE 1	21051	21051	--	--
TOTAL			135501	135501	2764	4000

EROSION CONTROL QUANTITIES

ECQ-1

REVISED BY | DATE REVISED
J. DONOHOE | T. CHRIS JOHNSON
CALCULATED-DESIGNED BY | CHECKED BY
SENIOR LANDSCAPE ARCHITECT
T. CHRIS JOHNSON
STATE OF CALIFORNIA - DEPARTMENT OF TRANSPORTATION
Caltrans LANDSCAPE ARCHITECTURE

LAST REVISION 00-00-00
DATE PLOTTED => 20-OCT-2014
TIME PLOTTED => 13:49

Dist	COUNTY	ROUTE	POST MILES TOTAL PROJECT	SHEET No.	TOTAL SHEETS
03	But	70	24.0/24.5	55	123

R. P. Gill 8-11-14
REGISTERED ELECTRICAL ENGINEER DATE

8-11-14
PLANS APPROVAL DATE

REGISTERED PROFESSIONAL ENGINEER
RUPINDER PAL GILL
No. 16642
Exp. 06-30-16
ELECTRICAL
STATE OF CALIFORNIA

THE STATE OF CALIFORNIA OR ITS OFFICERS OR AGENTS SHALL NOT BE RESPONSIBLE FOR THE ACCURACY OR COMPLETENESS OF SCANNED COPIES OF THIS PLAN SHEET.

NOTES:

1. FOR ACCURATE RIGHT OF WAY DATA, CONTACT RIGHT OF WAY ENGINEERING AT THE DISTRICT OFFICE.
2. INSTALL ELECTRICAL EQUIPMENT AND TEMPORARY WOOD POLES AT MINIMUM 30′ FROM ETW AND AS DIRECTED BY THE ENGINEER.
3. PROVIDE 25′ MINIMUM VERTICAL CLEARANCE FOR OVERHEAD CONDUCTOR.
4. TEMPORARY WOOD POLES WITH LUMINAIRE SHALL BE INSTALLED AT MINIMUM 15′ FROM ETW AND AS DIRECTED BY THE ENGINEER.

LEGEND (THIS SHEET):

[1] 1 MESSENGER CABLE, 2#4, 1#4G

[2] INSTALL TYPE III-AF SERVICE EQUIPMENT ENCLOSURE PER STANDARD PLANS ES-2D. PROVIDE ITEM (1) THRU (8), (14) 70 A ATS (15), (16), (20) THRU (23)

DETAIL A
NO SCALE

SYMBOLS:

310 WATT HPS LUMINAIRE ON WOOD POLE

ATS — AUTOMATIC TRANSFER SWITCH

Gen — GENERATOR

WIRING DIAGRAM

ABBREVIATIONS:

PG&E	PACIFIC GAS AND ELECTRIC
BT	BICYCLE TRAFFIC
ATS	AUTOMATIC TRANSFER SWITCH

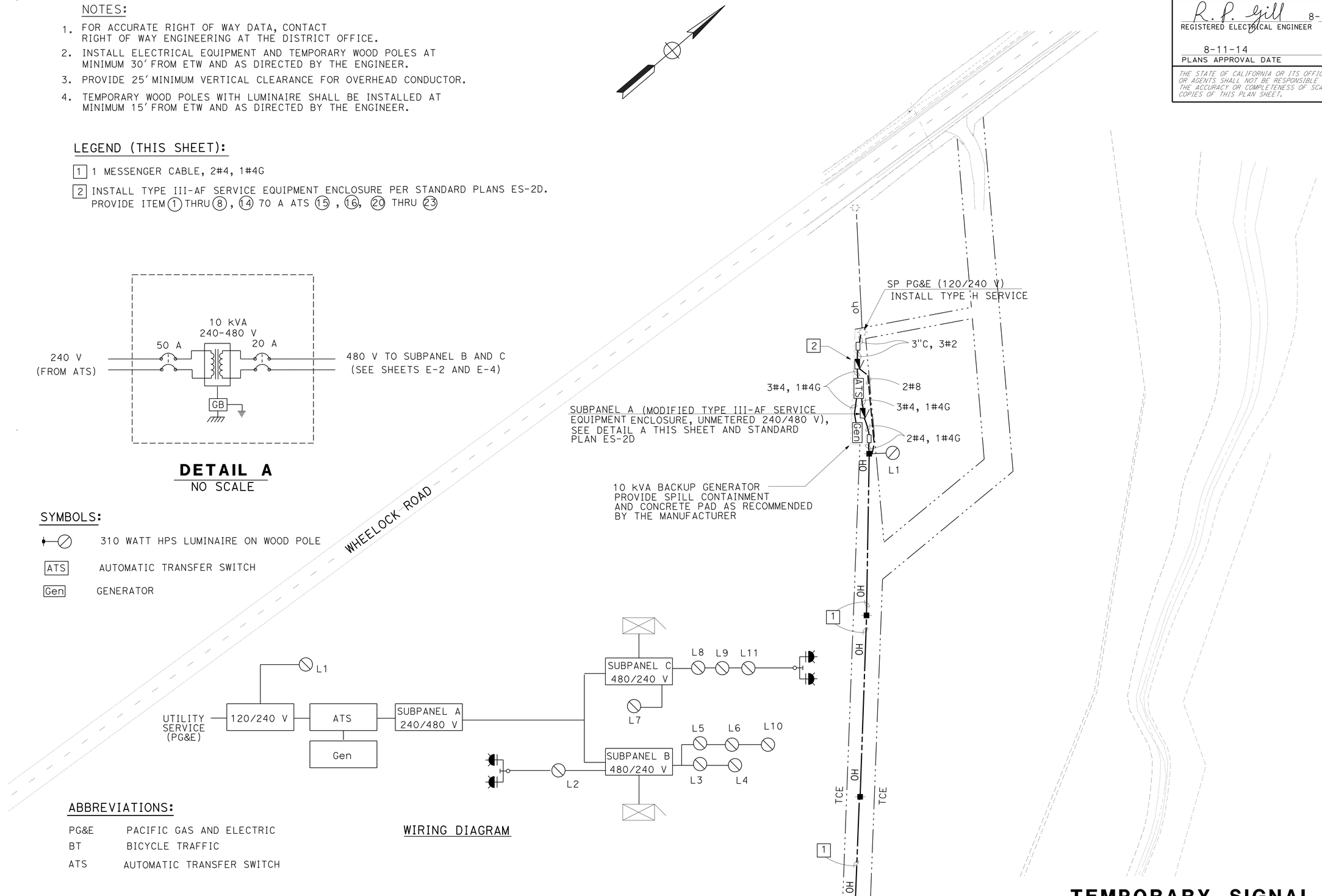

APPROVED FOR ELECTRICAL WORK ONLY

TEMPORARY SIGNAL SYSTEM

SCALE: 1" = 50′

E-1

STATE OF CALIFORNIA - DEPARTMENT OF TRANSPORTATION
Caltrans®
ELECTRICAL DESIGN

FUNCTIONAL SUPERVISOR: MARY ANN HUDSPETH
CALCULATED-DESIGNED BY: ALI HASSANI
CHECKED BY: RUPINDER PAL GILL
REVISED BY
DATE REVISED

LAST REVISION 00-00-00
DATE PLOTTED => 20-OCT-2014
TIME PLOTTED => 13:49

Dist	COUNTY	ROUTE	POST MILES TOTAL PROJECT	SHEET No.	TOTAL SHEETS
03	But	70	24.0/24.5	56	123

R. P. Gill 8-11-14
REGISTERED ELECTRICAL ENGINEER DATE

8-11-14
PLANS APPROVAL DATE

REGISTERED PROFESSIONAL ENGINEER
RUPINDER PAL GILL
No. 16642
Exp. 06-30-16
ELECTRICAL
STATE OF CALIFORNIA

THE STATE OF CALIFORNIA OR ITS OFFICERS OR AGENTS SHALL NOT BE RESPONSIBLE FOR THE ACCURACY OR COMPLETENESS OF SCANNED COPIES OF THIS PLAN SHEET.

NOTES:

1. FOR ACCURATE RIGHT OF WAY DATA, CONTACT RIGHT OF WAY ENGINEERING AT THE DISTRICT OFFICE.
2. INSTALL MESSENGER CABLES WITH A MINIMUM OF 12" SEPARATION.

LEGEND (THIS SHEET):

1. 1 MESSENGER CABLE, 2#4, 1#4G
   1 MESSENGER CABLE, 4#6, 1#6G, 1 SIC
   1 MESSENGER CABLE, 2#8, 1#8G
2. 1 MESSENGER CABLE, 4#12, 4#8, 1#8G, 2 VIVDS CABLE, 1 DLC
3. 2"C, 2#4, 1#4G
4. 2"C, 2#6, 1#6G 4#8
5. 2"C, 2#6, 1#6G
6. 2"C, 4#6, 1#6G, 1 SIC
7. 2"C, 4#12, 2 VIVDS CABLE, 1 DLC, 4#6, 1#6G, 1 SIC
8. 1 MESSENGER CABLE, 4#12, 4#8, 1#8G, 2 VIVDS CABLE, 1 DLC
9. 1 MESSENGER CABLE, 2#8, 1#8G, 1 VIVDS CABLE
10. 1 MESSENGER CABLE 2#8, 1#8G
11. 2"C, 2 VIVDS, 1 DLC, 4#12
12. LUMINAIRE FUNCTIONAL FOR STAGE 2, STAGE 3 AND STAGE 4
13. INSTALL DEPARTMENT-FURNISHED MODEL 2070 CONTROLLER ASSEMBLY WITH MODEL 332 CABINET.
    INSTALL BBS. RS AT COMPLETION OF WORK.
14. INSTALL TYPE D LOOP DETECTOR FOR BT.
15. 2"C, 2#8
16. 2"C, 4#8

WIRING DIAGRAM LEGEND:

- C — 15 A, 2P, CONTACTOR (LIGHTING)
- ▽ — 15 A, 1P, AUTO - TEST SWITCH
- PHOTOELECTRIC UNIT

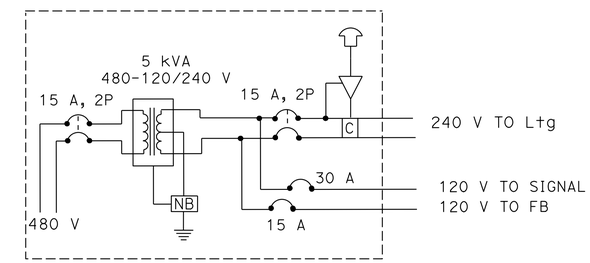

DETAIL A
NO SCALE

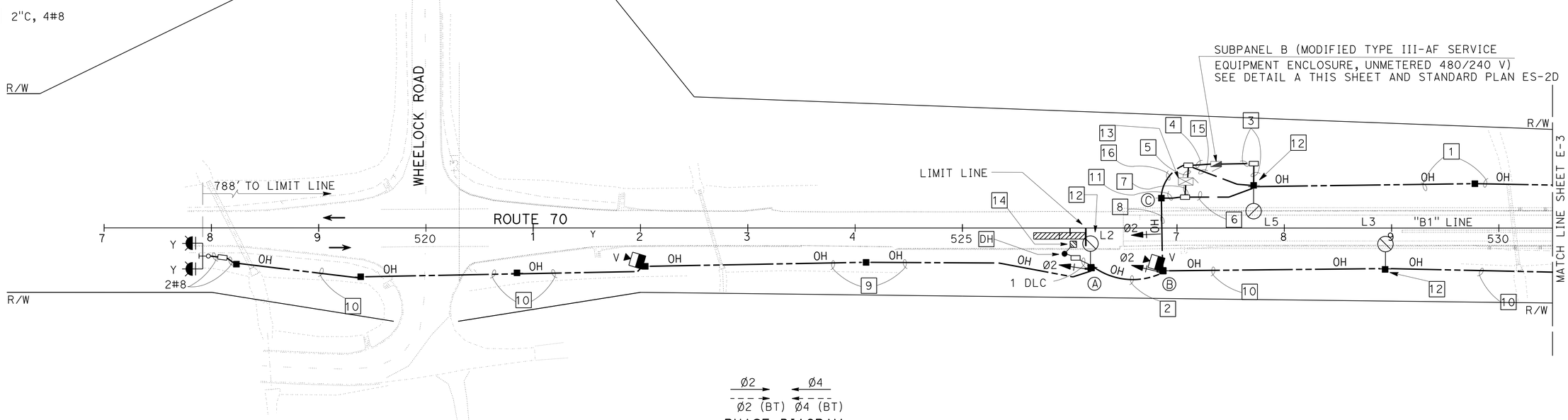

Ø2 Ø4
Ø2 (BT) Ø4 (BT)
PHASE DIAGRAM

TEMPORARY SIGNAL SYSTEM

SCALE: 1" = 50'

E-2

APPROVED FOR ELECTRICAL WORK ONLY

STATE OF CALIFORNIA - DEPARTMENT OF TRANSPORTATION
Caltrans®
ELECTRICAL DESIGN

FUNCTIONAL SUPERVISOR: MARY ANN HUDSPETH
CALCULATED-DESIGNED BY: ALI HASSANI
CHECKED BY: RUPINDER PAL GILL
REVISED BY
DATE REVISED

LAST REVISION 00-00-00
DATE PLOTTED => 20-OCT-2014
TIME PLOTTED => 13:49

Dist	COUNTY	ROUTE	POST MILES TOTAL PROJECT	SHEET No.	TOTAL SHEETS
03	But	70	24.0/24.5	57	123

R. P. Gill 8-11-14
REGISTERED ELECTRICAL ENGINEER DATE

8-11-14
PLANS APPROVAL DATE

REGISTERED PROFESSIONAL ENGINEER
RUPINDER PAL GILL
No. 16642
Exp. 06-30-16
ELECTRICAL
STATE OF CALIFORNIA

THE STATE OF CALIFORNIA OR ITS OFFICERS OR AGENTS SHALL NOT BE RESPONSIBLE FOR THE ACCURACY OR COMPLETENESS OF SCANNED COPIES OF THIS PLAN SHEET.

NOTES (THIS SHEET):

1. FOR ACCURATE RIGHT OF WAY DATA, CONTACT RIGHT OF WAY ENGINEERING AT THE DISTRICT OFFICE.
2. INSTALL MESSENGER CABLES WITH A MINIMUM OF 12" SEPARATION.

LEGEND (THIS SHEET):

1. 1 MESSENGER CABLE, 2#4, 1#4G
2. 1 MESSENGER CABLE, 2#4, 1#4G
   1 MESSENGER CABLE, 4#6, 1#6G, 1 SIC
3. 1 MESSENGER CABLE, 2#4, 1#4G
   1 MESSENGER CABLE, 4#6, 1#6G, 1 SIC
   1 MESSENGER CABLE, 2#8, 1#8G
4. 1 MESSENGER CABLE, 2#8, 1#8G
5. LUMINAIRE FUNCTIONAL FOR STAGE 2, STAGE 3 AND STAGE 4

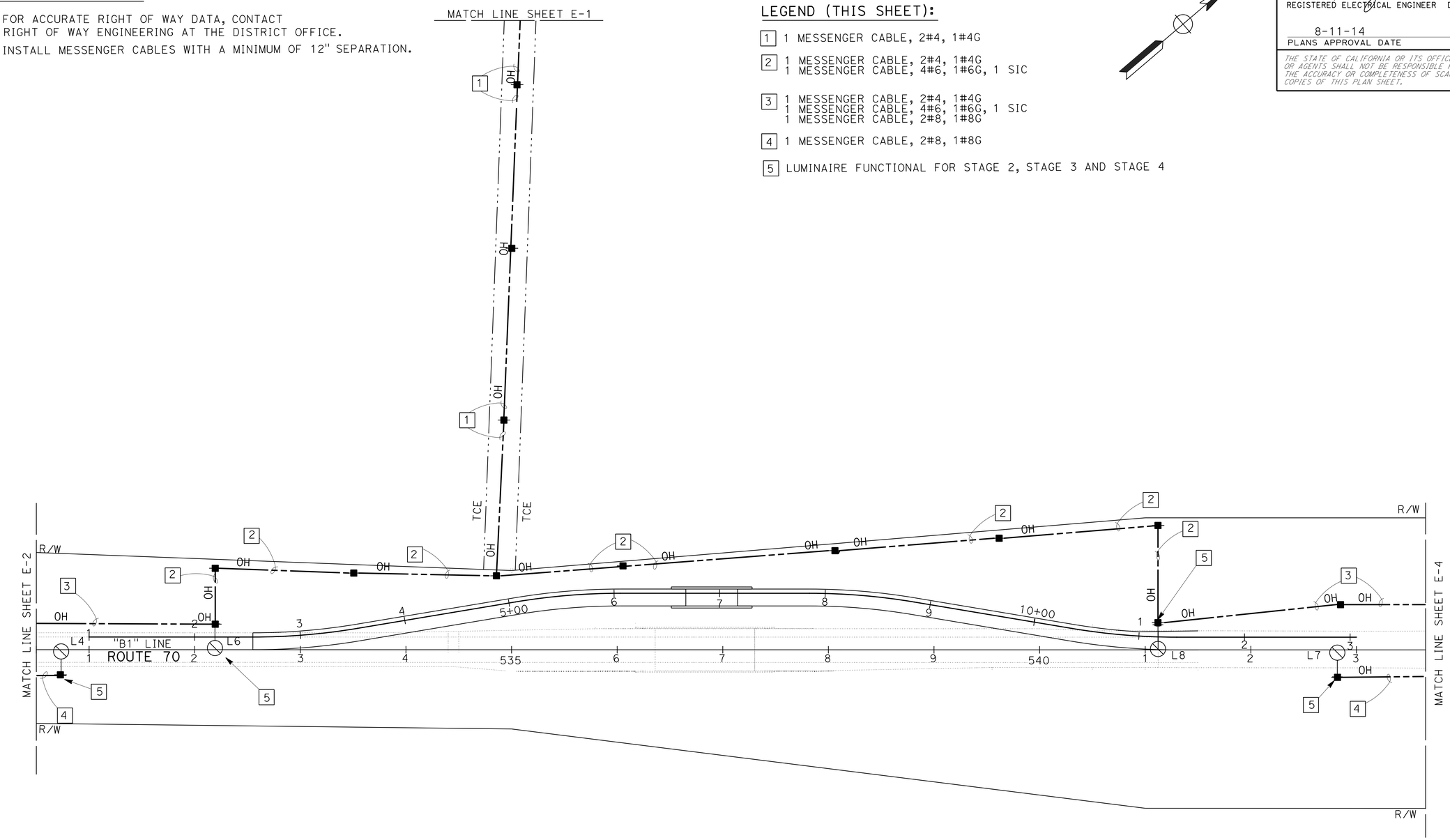

TEMPORARY SIGNAL SYSTEM

SCALE: 1" = 50'

E-3

APPROVED FOR ELECTRICAL WORK ONLY

STATE OF CALIFORNIA - DEPARTMENT OF TRANSPORTATION
Caltrans® ELECTRICAL DESIGN

FUNCTIONAL SUPERVISOR: MARY ANN HUDSPETH
CALCULATED-DESIGNED BY: ALI HASSANI
CHECKED BY: RUPINDER PAL GILL
REVISED BY
DATE REVISED

LAST REVISION 00-00-00
DATE PLOTTED => 20-OCT-2014
TIME PLOTTED => 13:49

Dist	COUNTY	ROUTE	POST MILES TOTAL PROJECT	SHEET No.	TOTAL SHEETS
03	But	70	24.0/24.5	58	123

R. P. Gill 8-11-14
REGISTERED ELECTRICAL ENGINEER DATE

8-11-14
PLANS APPROVAL DATE

REGISTERED PROFESSIONAL ENGINEER RUPINDER PAL GILL No. 16642 Exp. 06-30-16 ELECTRICAL STATE OF CALIFORNIA

THE STATE OF CALIFORNIA OR ITS OFFICERS OR AGENTS SHALL NOT BE RESPONSIBLE FOR THE ACCURACY OR COMPLETENESS OF SCANNED COPIES OF THIS PLAN SHEET.

NOTES (THIS SHEET):

1. FOR ACCURATE RIGHT OF WAY DATA, CONTACT RIGHT OF WAY ENGINEERING AT THE DISTRICT OFFICE.
2. INSTALL MESSENGER CABLES WITH A MINIMUM OF 12" SEPARATION.

LEGEND (THIS SHEET):

1. 1 MESSENGER CABLE, 2#4, 1#4G
   1 MESSENGER CABLE, 2#8, 1#8G
   1 MESSENGER CABLE, 4#6, 1#6G, 1 SIC
2. 1 MESSENGER CABLE, 2#8, 1#8G
3. 2"C, 2#4, 1#4G
4. 2"C, 2#6, 1#6G, 4#8
5. 2"C, 2#6, 1#6G
6. 1 MESSENGER CABLE, 4#8, 1#8G, 1 VIVDS CABLE, 1 DLC
   1 MESSENGER CABLE, 4#6, 1#6G
7. 2"C, 2 VIVDS CABLE, 1 DLC
8. 1 MESSENGER CABLE, 2#8, 1#8G
   1 MESSENGER CABLE, 4#6, 1#6G
9. 1 MESSENGER CABLE, 2#8, 1#8G, 1 VIVDS CABLE
10. LUMINAIRE FUNCTIONAL FOR STAGE 2, STAGE 3 AND STAGE 4
11. INSTALL DEPARTMENT-FURNISHED MODEL 2070 CONTROLLER ASSEMBLY WITH MODEL 332 CABINET. INSTALL BBS. RS AT COMPLETION OF WORK.
12. 1 MESSENGER CABLE, 4#6, 1#6G
    1 MESSENGER CABLE, 4#8, 1#8G
13. INSTALL TYPE D LOOP DETECTOR FOR BT
14. 2"C, 4#8
15. 2"C, 2 VIVDS CABLE, 1 DLC, 1SIC

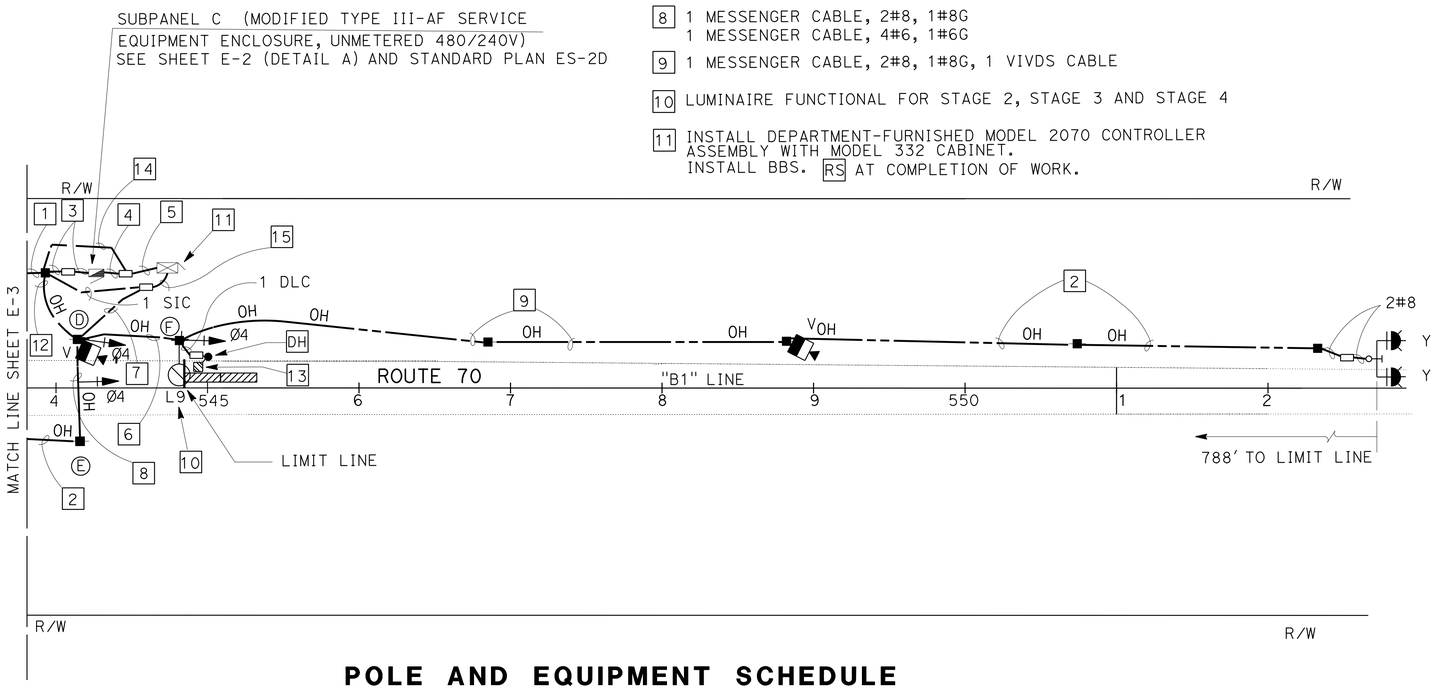

POLE AND EQUIPMENT SCHEDULE

No.	STANDARD TYPE	STANDARD LMA	Veh Sig Mtg Ø	Veh Sig Mtg SPAN WIRE	Veh Sig Mtg Pole	HPS LUMINAIRE	SPECIAL EQUIPMENT
A	WOOD POLE	15'	2		SV-1-T	310 W	
B	WOOD POLE		2	SW-3	SV-1-T		VIVDS CAMERA
C	WOOD POLE						
D	WOOD POLE		4	SW-3	SV-1-T		VIVDS CAMERA
E	WOOD POLE						
F	WOOD POLE	15'	4		SV-1-T	310 W	

Ø2 Ø4
Ø2 (BT) Ø4 (BT)
PHASE DIAGRAM

APPROVED FOR ELECTRICAL WORK ONLY

TEMPORARY SIGNAL SYSTEM

SCALE: 1" = 50'

E-4

STATE OF CALIFORNIA - DEPARTMENT OF TRANSPORTATION
Caltrans ELECTRICAL DESIGN
FUNCTIONAL SUPERVISOR: MARY ANN HUDSPETH
CALCULATED-DESIGNED BY: ALI HASSANI
CHECKED BY: RUPINDER PAL GILL
REVISED BY / DATE REVISED

LAST REVISION 00-00-00 | DATE PLOTTED => 20-OCT-2014 | TIME PLOTTED => 13:49

Dist	COUNTY	ROUTE	POST MILES TOTAL PROJECT	SHEET No.	TOTAL SHEETS
03	But	70	24.0/24.5	59	123

R. P. Gill 8-11-14
REGISTERED ELECTRICAL ENGINEER DATE

8-11-14
PLANS APPROVAL DATE

REGISTERED PROFESSIONAL ENGINEER
RUPINDER PAL GILL
No. 16642
Exp. 06-30-16
ELECTRICAL
STATE OF CALIFORNIA

THE STATE OF CALIFORNIA OR ITS OFFICERS OR AGENTS SHALL NOT BE RESPONSIBLE FOR THE ACCURACY OR COMPLETENESS OF SCANNED COPIES OF THIS PLAN SHEET.

NOTES (THIS SHEET):

1. FOR ACCURATE RIGHT OF WAY DATA, CONTACT RIGHT OF WAY ENGINEERING AT THE DISTRICT OFFICE.
2. INSTALL MESSENGER CABLES WITH A MINIMUM OF 12" SEPARATION.

LEGEND (THIS SHEET):

1. 1 MESSENGER CABLE, 2#4, 1#4G
2. 1 MESSENGER CABLE, 2#4, 1#4G
   1 MESSENGER CABLE, 4#6, 1#6G, 1 SIC
3. 1 MESSENGER CABLE, 2#4, 1#4G
   1 MESSENGER CABLE, 4#6, 1#6G, 1 SIC
   1 MESSENGER CABLE, 2#8, 1#8G
4. 1 MESSENGER CABLE, 2#8, 1#8G
5. LUMINAIRE FUNCTIONAL FOR STAGE 3

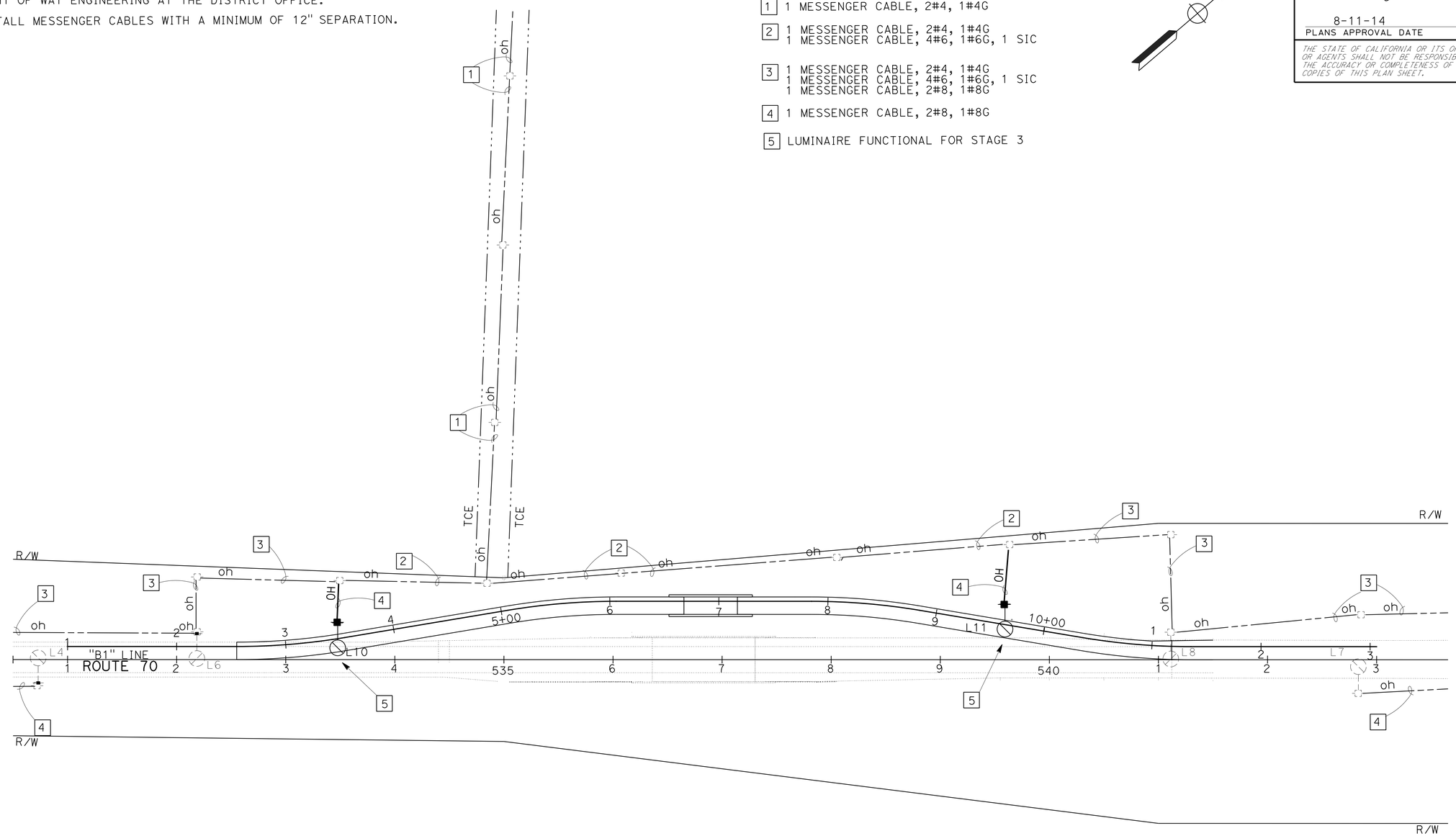

TEMPORARY SIGNAL SYSTEM

SCALE: 1" = 50'

E-5

APPROVED FOR ELECTRICAL WORK ONLY

STATE OF CALIFORNIA - DEPARTMENT OF TRANSPORTATION
Caltrans® ELECTRICAL DESIGN

FUNCTIONAL SUPERVISOR: MARY ANN HUDSPETH
CALCULATED-DESIGNED BY: ALI HASSANI
CHECKED BY: RUPINDER PAL GILL
REVISED BY
DATE REVISED

LAST REVISION 00-00-00
DATE PLOTTED => 20-OCT-2014
TIME PLOTTED => 13:49

Dist	COUNTY	ROUTE	POST MILES TOTAL PROJECT	SHEET No.	TOTAL SHEETS
03	But	70	24.0/24.5	60	123

R. P. Gill 8-11-14
REGISTERED ELECTRICAL ENGINEER DATE

8-11-14
PLANS APPROVAL DATE

REGISTERED PROFESSIONAL ENGINEER RUPINDER PAL GILL No. 16642 Exp. 06-30-16 ELECTRICAL STATE OF CALIFORNIA

THE STATE OF CALIFORNIA OR ITS OFFICERS OR AGENTS SHALL NOT BE RESPONSIBLE FOR THE ACCURACY OR COMPLETENESS OF SCANNED COPIES OF THIS PLAN SHEET.

NOTES (THIS SHEET):

1. TYPE A REFERS TO BBS EQUIPMENT FROM MANUFACTURER A.
2. TYPE B REFERS TO BBS EQUIPMENT FROM MANUFACTURER B.
3. CASE-1 REFERS TO THE SITUATION WHEN THE ENTIRE BBS EQUIPMENT INCLUDING THE BATTERIES ARE INSTALLED IN THE BBS CABINET.
4. CASE-2 REFERS TO THE SITUATION WHEN ONLY THE BATTERIES ARE INSTALLED IN THE BBS CABINET. THE REMAINING EQUIPMENT IS PLACED IN THE 332 CONTROLLER CABINET (CASE-2 IS NOT USED).
5. THE LOCATION OF 1½" NIPPLE WILL BE DETERMINED BY THE ENGINEER IN THE FIELD.
6. CONTRACTOR SHALL FURNISH AND INSTALL NEMA-1 ENCLOSURE WITH 30A, 1P, 120/240 VOLTS RATED CIRCUIT BREAKER MANUFACTURED PER U.L. STANDARD 489.
7. TEMPERATURE PROBE SHALL BE ATTACHED TO THE BATTERY BY TAPE OR ATTACHED TO THE NEGATIVE TERMINAL OF THE BATTERY.
8. THE ELECTRICAL POWER FOR THE COOLING FAN FOR BBS CABINET SHALL BE TAPPED FROM THE BOTTOM OF TBS IN 332 CABINET.

ABBREVIATIONS (THIS SHEET):

BBS = BATTERY BACKUP SYSTEM
PTS = POWER TRANSFER SWITCH
PTR = POWER TRANSFER RELAY
UPS = UNINTERRUPTIBLE POWER SUPPLY
UPSC= UNINTERRUPTIBLE POWER SUPPLY CONTROLLER
UPSM= UPS MODE
BP = BYPASS
BPC = BYPASS CONTROL
MBPS= MANUAL BYPASS SWITCH
MBJ = MAIN BONDING JUMPER
AC+ = UNGROUNDED CONDUCTOR
AC- = GROUNDED CONDUCTOR
EG = EQUIPMENT GROUND
C = COMMON
GRN = GREEN
BLK = BLACK
SF = STATE FURNISHED

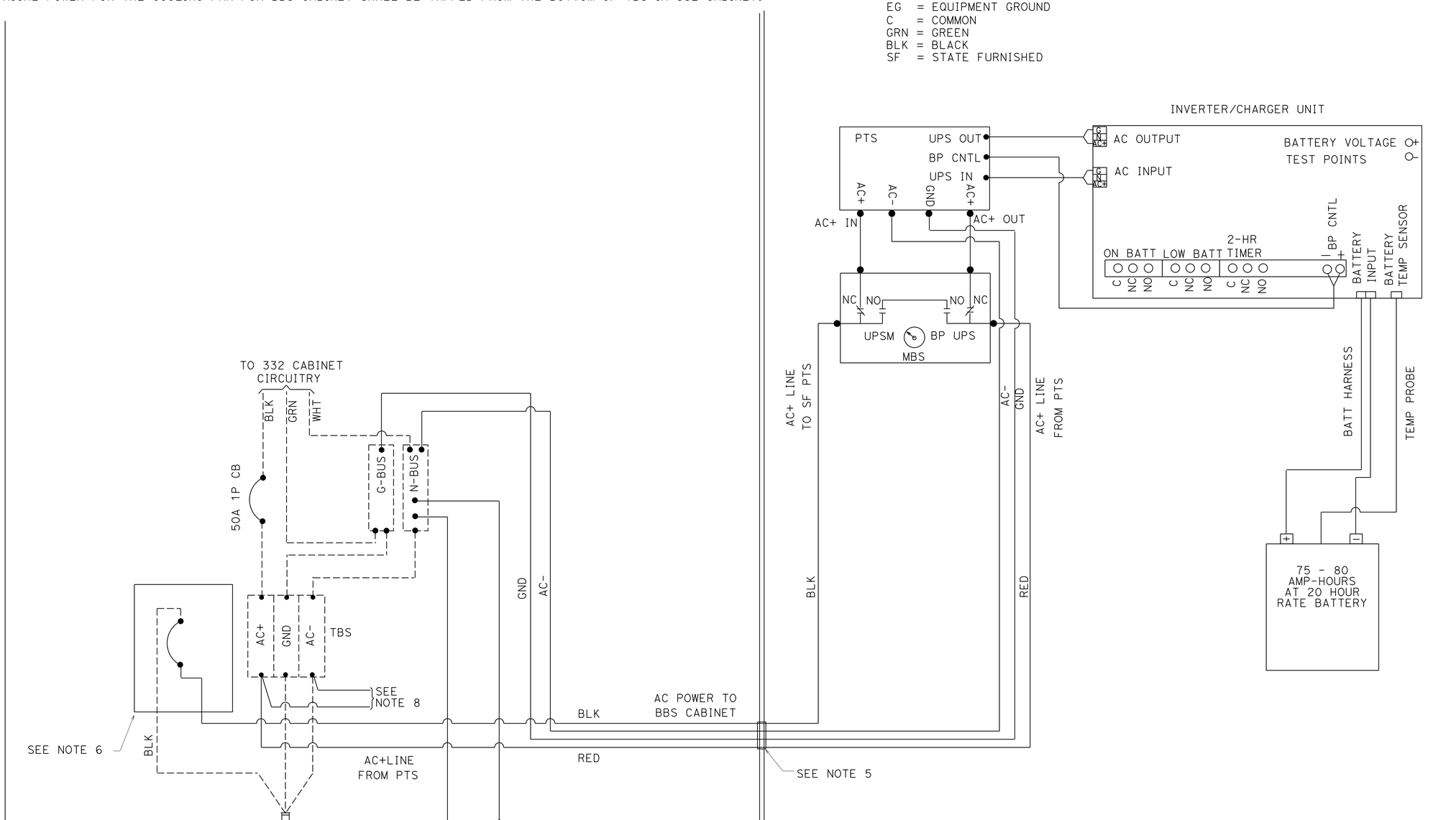

ELECTRICAL SYSTEMS
(BBS POWER CONNECTION DIAGRAM, TYPE A, CASE-1)

NO SCALE

E-6

STATE OF CALIFORNIA - DEPARTMENT OF TRANSPORTATION
Caltrans® ELECTRICAL DESIGN
FUNCTIONAL SUPERVISOR: MARY ANN HUDSPETH
CALCULATED-DESIGNED BY / CHECKED BY
DIVISION OF TRAFFIC OPERATIONS
REVISED BY / DATE REVISED

LAST REVISION 00-00-00 | DATE PLOTTED => 20-OCT-2014 | TIME PLOTTED => 13:49

Dist	COUNTY	ROUTE	POST MILES TOTAL PROJECT	SHEET No.	TOTAL SHEETS
03	But	70	24.0/24.5	61	123

R. P. Gill 8-11-14
REGISTERED ELECTRICAL ENGINEER DATE

8-11-14
PLANS APPROVAL DATE

REGISTERED PROFESSIONAL ENGINEER RUPINDER PAL GILL No. 16642 Exp. 06-30-16 ELECTRICAL STATE OF CALIFORNIA

THE STATE OF CALIFORNIA OR ITS OFFICERS OR AGENTS SHALL NOT BE RESPONSIBLE FOR THE ACCURACY OR COMPLETENESS OF SCANNED COPIES OF THIS PLAN SHEET.

NOTES (THIS SHEET):

1. TYPE A REFERS TO BBS EQUIPMENT FROM MANUFACTURER A.
2. TYPE B REFERS TO BBS EQUIPMENT FROM MANUFACTURER B.
3. CASE-1 REFERS TO THE SITUATION WHEN THE ENTIRE BBS EQUIPMENT INCLUDING THE BATTERIES ARE INSTALLED IN THE BBS CABINET.
4. CASE-2 REFERS TO THE SITUATION WHEN ONLY THE BATTERIES ARE INSTALLED IN THE BBS CABINET. THE REMAINING EQUIPMENT IS PLACED IN THE 332 CONTROLLER CABINET (CASE-2 IS NOT USED).
5. THE LOCATION OF 1½" NIPPLE WILL BE DETERMINED BY THE ENGINEER IN THE FIELD.
6. CONTRACTOR SHALL FURNISH AND INSTALL NEMA-1 ENCLOSURE WITH 30A, 1P, 120/240 VOLTS RATED CIRCUIT BREAKER MANUFACTURED PER U.L. STANDARD 489.
7. TEMPERATURE PROBE SHALL BE ATTACHED TO THE BATTERY BY TAPE OR ATTACHED TO THE NEGATIVE TERMINAL OF THE BATTERY.
8. THE ELECTRICAL POWER FOR THE COOLING FAN FOR BBS CABINET SHALL BE TAPPED FROM THE BOTTOM OF TBS IN 332 CABINET.

ABBREVIATIONS (THIS SHEET):

BBS = BATTERY BACKUP SYSTEM
PTS = POWER TRANSFER SWITCH
PTR = POWER TRANSFER RELAY
UPS = UNINTERRUPTIBLE POWER SUPPLY
UPSC= UNINTERRUPTIBLE POWER SUPPLY CONTROLLER
UPSM= UPS MODE
BP = BYPASS
BPC = BYPASS CONTROL
MBPS= MANUAL BYPASS SWITCH
MBJ = MAIN BONDING JUMPER
AC+ = UNGROUNDED CONDUCTOR
AC- = GROUNDED CONDUCTOR
EG = EQUIPMENT GROUND
C = COMMON
GRN = GREEN
BLK = BLACK
SF = STATE FURNISHED

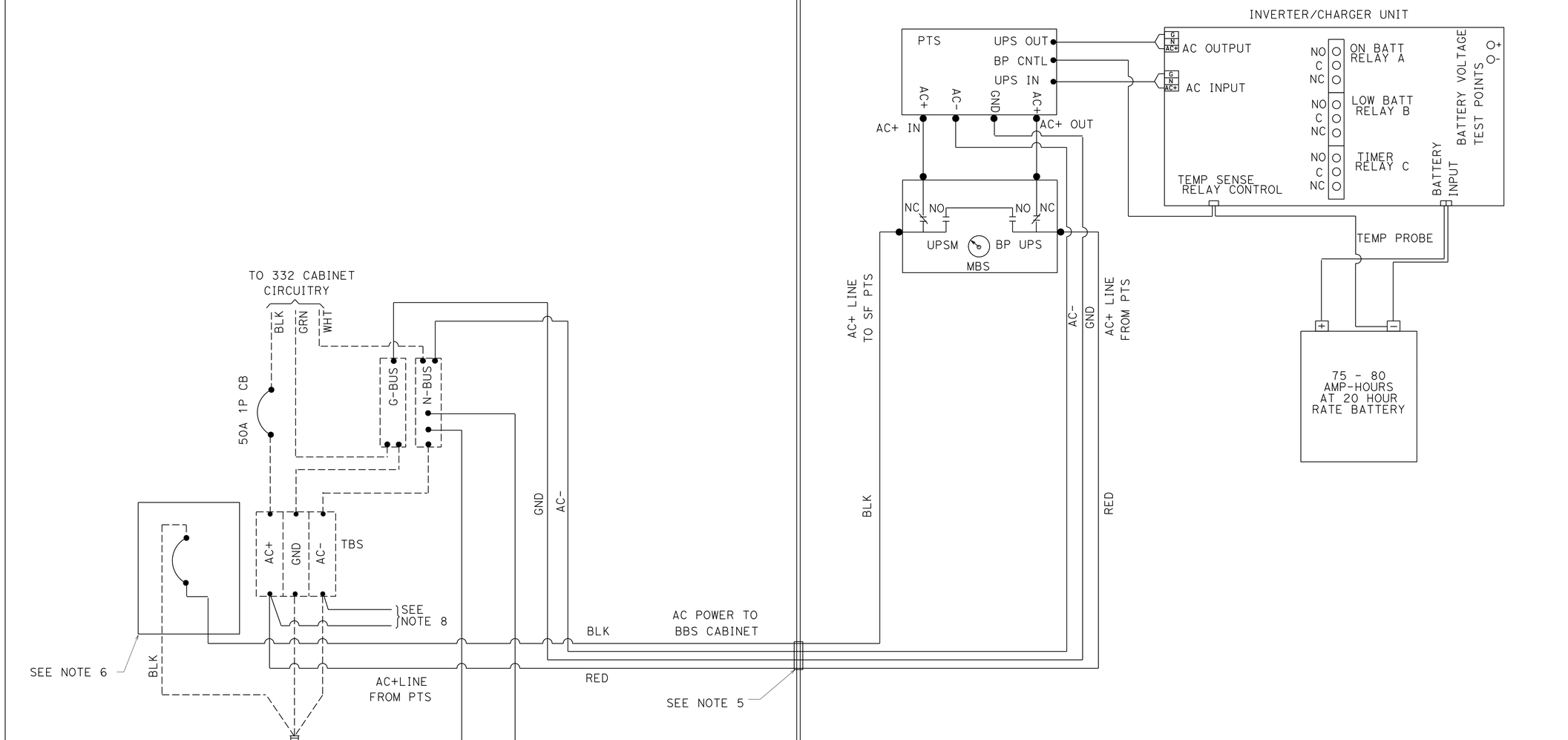

ELECTRICAL SYSTEMS
(BBS POWER CONNECTION DIAGRAM, TYPE B, CASE-1)

NO SCALE

E-7

STATE OF CALIFORNIA - DEPARTMENT OF TRANSPORTATION
Caltrans® ELECTRICAL DESIGN
FUNCTIONAL SUPERVISOR: MARY ANN HUDSPETH
CALCULATED-DESIGNED BY / CHECKED BY
DIVISION OF TRAFFIC OPERATIONS
REVISED BY / DATE REVISED

LAST REVISION 00-00-00 | DATE PLOTTED => 20-OCT-2014 | TIME PLOTTED => 13:49

Dist	COUNTY	ROUTE	POST MILES TOTAL PROJECT	SHEET No.	TOTAL SHEETS
03	But	70	24.0/24.5	62	123

R. P. Gill 8-11-14
REGISTERED ELECTRICAL ENGINEER DATE

8-11-14
PLANS APPROVAL DATE

REGISTERED PROFESSIONAL ENGINEER
RUPINDER PAL GILL
No. 16642
Exp. 06-30-16
ELECTRICAL
STATE OF CALIFORNIA

THE STATE OF CALIFORNIA OR ITS OFFICERS OR AGENTS SHALL NOT BE RESPONSIBLE FOR THE ACCURACY OR COMPLETENESS OF SCANNED COPIES OF THIS PLAN SHEET.

NOTE:
ITEMS SHOWN IN TABLE ARE NOT A SEPARATE PAY ITEMS, FOR INFORMATION ONLY.

TEMPORARY SIGNAL SYSTEM

SHEET No.	WOOD POLE	VIVDS CAMERA	VIVDS CABLE	2" CONDUIT	TYPEIII-AF SERVICE EQUIPMENT ENCLOSURE	CONTROLLER CABINET TYPE 332 WITH BBS	TYPE 15-FBS	10 kVA TRANSFORMER	5 kVA TRANSFORMER	CONDUCTOR #4	CONDUCTOR #6	CONDUCTOR #8	CONDUCTOR #12	SIC	MESSENGER CABLE	310 WATT HPS LUMINAIRE	PB	TYPE D LOOP	DETECTOR HANDHOLE	DLC
	EA	EA	FT	FT	EA	EA	EA	EA	EA	FT	FT	FT	FT	FT	FT	EA	EA	EA	EA	FT
E-1	3			150	2			1		2240					550	1	2			
E-2	11	2	660	150	1	1	1		1	1500	1800	2740	1200	380	2250	3	5	1	1	200
E-3	15									6060	6500	1750		1340	2560	4				
E-4	8	2	660	100	1	1	1		1	100	800	2100		100	800	1	5	1	1	200
E-5	2											600			200	2				

ELECTRICAL QUANTITIES

E-8

CALCULATED-DESIGNED BY ALI HASSANI
CHECKED BY RUPINDER PAL GILL
REVISED BY
DATE REVISED
FUNCTIONAL SUPERVISOR MARY ANN HUDSPETH

STATE OF CALIFORNIA - DEPARTMENT OF TRANSPORTATION
Caltrans ELECTRICAL DESIGN

LAST REVISION 00-00-00
DATE PLOTTED => 20-OCT-2014
TIME PLOTTED => 13:50

Dist	COUNTY	ROUTE	POST MILES TOTAL PROJECT	SHEET No.	TOTAL SHEETS
03	But	70	24.0/24.5	63	123

M. A. Panchesson 8-11-14
REGISTERED CIVIL ENGINEER DATE

8-11-14
PLANS APPROVAL DATE

REGISTERED PROFESSIONAL ENGINEER M.A. PANCHESSON No. 44125 Exp. 06-30-15 CIVIL STATE OF CALIFORNIA

THE STATE OF CALIFORNIA OR ITS OFFICERS OR AGENTS SHALL NOT BE RESPONSIBLE FOR THE ACCURACY OR COMPLETENESS OF SCANNED COPIES OF THIS PLAN SHEET.

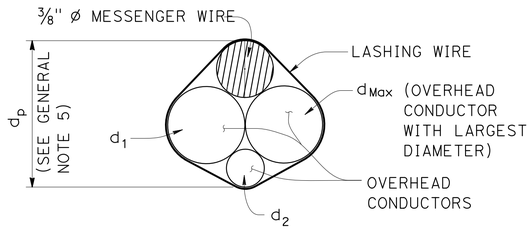

$d_p = 3/8'' + d_{Max} + 0.30 * (d_1 + d_2 + \ldots d_n)$

PROJECTED DEPTH OF OVERHEAD BUNDLE, (d_p)

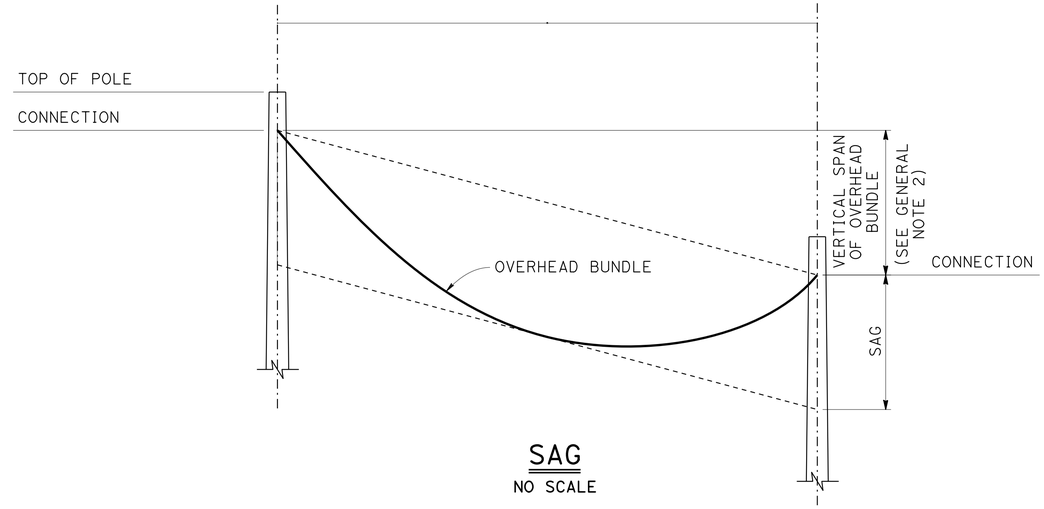

SAG

NO SCALE

Design: AASHTO Standard Specifications for Structural Supports for Highway Signs, Luminaires and Traffic Signals, Fifth Edition (LTS-5).

GROUP LOAD COMBINATIONS:

I Dead Load
II Dead Load + Wind Load
III Dead Load + 0.5 (Wind Load) + Ice Load
IV Fatigue: Not used

LOADING:

Wind Loading: 100 mph (3-second gust)
Wind Recurrence Interval: 10 years
Combined height, exposure, and elevated terrain factor = 1.05 (Exposure C, structure is not located on or over the top half of a ridge, hill, or escarpment)

Ice Loading: 3.0 psf on surfaces, 0.60 in radial thickness of ice at a unit weight of 60 pcf on overhead bundles

BASIC DESIGN VALUES:

Timber Poles: Fb = 1850 psi
Fv = 110 psi
Fcp = 230 psi
Fc = 950 psi
E = 1500 x 10^3 psi

DESIGN WIRE BREAKING STRENGTHS:

ASTM A475, Utilities Grade, 7 strand modified by termination efficiency factor of 0.8

FOUNDATION DESIGN NOTES:

1. Pole embedment depth design is based on Broms' approximate procedure as described in Article 13.6 of AASHTO LTS-5.

2. Embedment depth is calculated based on following soil parameters,
Cohesive Soil:
Shear strength of soil c = 1500 psf.
Cohesionless Soil:
Ø = 30 deg, γ = 120 pcf.
Soil assumed to be unsaturated.

3. An overload factor of 2.0 and an undercapacity factor of 0.7 were used for safety factor of 2.86.

4. Allowable vertical bearing pressure at the end bearing of poles is 3000 psf at 6 feet or more embedment.

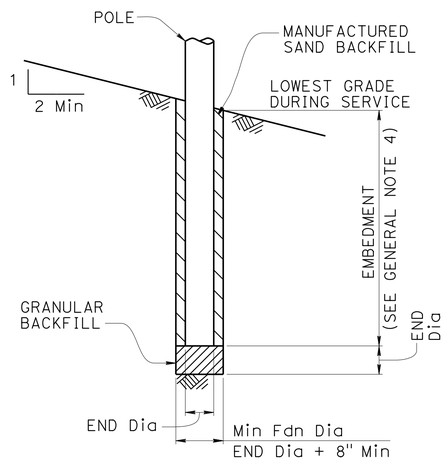

POLE FOUNDATION

GENERAL NOTES:

1. The messenger wire and any combination of overhead conductors must not exceed either a self weight of 3.0 lb/ft or the maximun d_p.

2. The maximum vertical span is 10% of the horizontal span.

3. For poles with adjacent unbalanced horizontal spans, the shortest horizontal span must be at least 50% of the largest horizontal span.

4. Add 2'-0" for slopes above 1V:4H.

5. For a pole supporting multiple spans, calculate d_p for each span and use the largest value.

6. Do not exceed the attachments shown.

DIAMETERS AND SELF WEIGHT OF OVERHEAD CONDUCTORS

CONDUCTOR OR CABLE TYPE	DIAMETER d (in)	WEIGHT w (plf)
3 CONDUCTOR SIGNAL CABLE (3CSC)	0.400	0.0980
5 CONDUCTOR SIGNAL CABLE (5CSC)	0.500	0.1560
9 CONDUCTOR SIGNAL CABLE (9CSC)	0.650	0.2760
12 CONDUCTOR SIGNAL CABLE (12CSC)	0.800	0.3970
28 CONDUCTOR SIGNAL CABLE (28CSC)	0.900	0.6490
1-#14	0.166	0.0235
1-#12	0.185	0.0330
1-#10	0.210	0.0476
1-#8	0.271	0.0774
1-#6	0.310	0.1130
1-#4	0.359	0.1690
1-#3	0.388	0.2080
1-#2	0.420	0.2560
1-#1	0.498	0.3340
6-CONDUCTOR SIGNAL INTERCONNECT CABLE (SIC)	0.350	0.0860
12-CONDUCTOR SIGNAL INTERCONNECT CABLE (SIC)	0.500	0.1440
DETECTOR LEAD-IN CABLE (DLC)	0.310	0.0440
12 to 48-STRAND FIBER OPTIC CABLE (48FOC)	0.424	0.0600
72-STRAND FIBER OPTIC CABLE (72FOC)	0.484	0.0770
96-STRAND FIBER OPTIC CABLE (96FOC)	0.535	0.1050
144-STRAND FIBER OPTIC CABLE (144FOC)	0.670	0.1890
3/8" Ø MESSENGER WIRE	0.375	0.2730

TEMPORARY WOOD POLES
GENERAL NOTES

SPECIAL ELECTRICAL STRUCTURES

NO SCALE

SES-1

STANDARD DRAWING
FILE NO. xs18-010
APPROVAL DATE November 2012

STATE OF CALIFORNIA - DEPARTMENT OF TRANSPORTATION
Caltrans® DIVISION OF ENGINEERING
FUNCTIONAL SUPERVISOR ALI KIANI
CALCULATED-DESIGNED BY
CHECKED BY
REVISED BY
DATE REVISED
DIVISION OF ENGINEERING SERVICES
DIVISION OF ENGINEERING SERVICES

LAST REVISION 00-00-00
DATE PLOTTED => 20-OCT-2014
TIME PLOTTED => 13:50

Dist	COUNTY	ROUTE	POST MILES TOTAL PROJECT	SHEET No.	TOTAL SHEETS
03	But	70	24.0/24.5	64	123

M. A. Panchesson 8-11-14
REGISTERED CIVIL ENGINEER DATE

8-11-14
PLANS APPROVAL DATE

REGISTERED PROFESSIONAL ENGINEER M.A. PANCHESSON No. 44125 Exp. 06-30-15 CIVIL STATE OF CALIFORNIA

THE STATE OF CALIFORNIA OR ITS OFFICERS OR AGENTS SHALL NOT BE RESPONSIBLE FOR THE ACCURACY OR COMPLETENESS OF SCANNED COPIES OF THIS PLAN SHEET.

POLE SELECTION TABLE

LEGEND

Wood Pole No Attachments

A Wood Pole with Attachments

—OH— Overhead Bundle

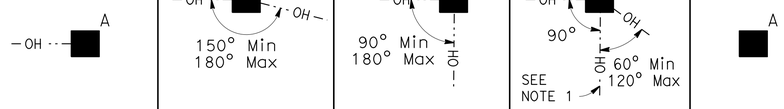

			CASE 1N				CASE 2N				CASE 3N				CASE 4N				CASE 5N
		MAXIMUM d_p	1"	1.5"	2.0"	2.5"	1"	1.5"	2.0"	2.5"	1.0"	1.5"	2.0"	2.5"	1"	1.5"	2.0"	2.5"	N/A
OVERHEAD BUNDLE HORIZONTAL SPAN (Max)	50′	MINIMUM POLE CLASS	H-1	H-2	H-2	H-2	4	3	2	1	H-2	H-2	H-3	H-3	H-4	H-4	H-4	H-5	CLASS 1 E = 10′
		POLE EMBEDMENT (E)	11′				10′				11′				12′				
	100′	MINIMUM POLE CLASS	H-2	H-3	H-4	H-5	1	H-1	H-2	H-3	H-4	H-5	H-5	H-6	H-5	H-5	H-6		
		POLE EMBEDMENT (E)	12′				11′				12′				12′				
	150′	MINIMUM POLE CLASS	H-4	H-5	H-6		H-1	H-2	H-3	H-5	H-6				H-6				
		POLE EMBEDMENT (E)	12′				12′				12′				12′				
	200′	MINIMUM POLE CLASS	H-5	H-6			H-2	H-3	H-5										
		POLE EMBEDMENT (E)	12′				12′												

1. CCTV camera assembly or vehicle detection system
2. Overhead bundle consisting of a ⅜" ø messenger wire and overhead conductors and lashing wire.
3. Luminaire with mast arm
4. Pedestrian pushbutton
5. Signal face with 3 indications or single sheet sign panel (10 SQFT Max)
6. Riser with weather head as required
7. Pull box as required
8. Grounding as required
9. Single section flashing beacon or single sheet sign panel (4 SQFT Max)
10. Single sheet sign panel (4′ x 4′ Max) or signal face with 3 indications
11. Flashing beacon control assembly
12. NEMA 3R enclosure, 26"(W) x 56"(H) x 12"(D) Max dimensions. Max weight including batteries, 450 lbs
13. 25′ SQFT Max total photovoltaic panels mounted as shown as required
14. 2-section 12" flashing beacon

NOTES:

1. In addition to other restrictions on maximum horizontal span, this horizontal span must not exceed 100′.
2. Cases 1N, 3N and 4N may substitute the attachments shown in Case 5N if the photovoltaic panel is not included.

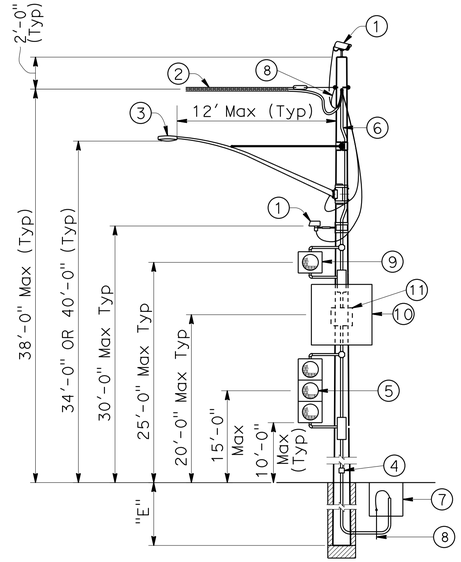

CASE 1N
POLE AT DEAD END WITH ATTACHMENTS
SEE NOTE 2

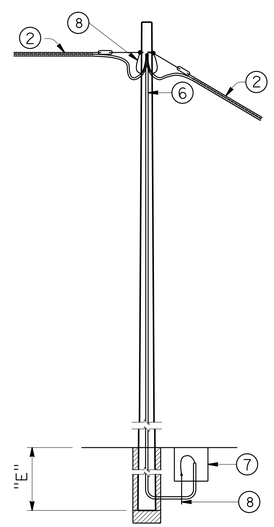

CASE 2N
POLE AT TANGENT WITHOUT ATTACHMENTS

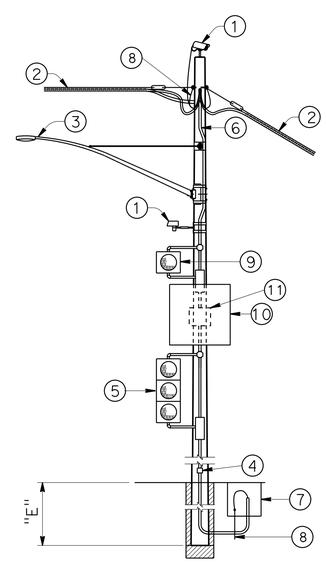

CASE 3N
POLE AT TANGENT OR CORNER WITH ATTACHMENTS
SEE NOTE 2

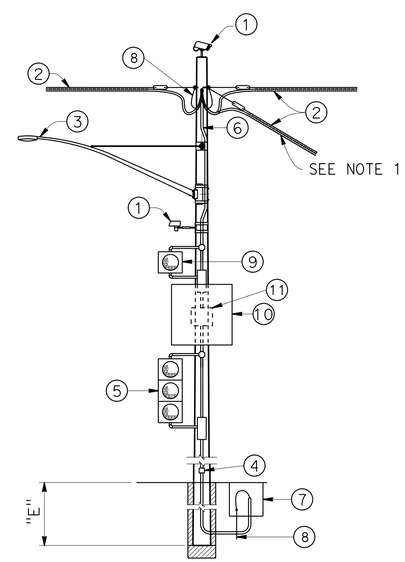

CASE 4N
POLE AT JUNCTION WITH ATTACHMENTS
SEE NOTE 2

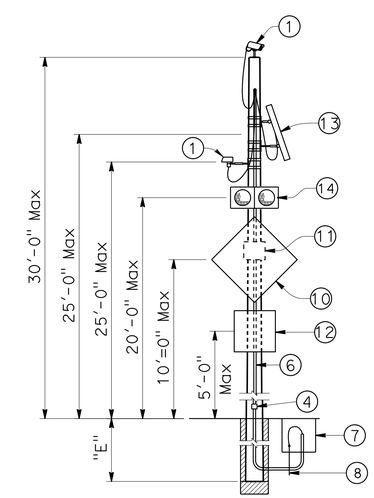

CASE 5N
POLE WITHOUT OVERHEAD BUNDLE WITH ATTACHMENTS

TEMPORARY WOOD POLES
NON-GUYED - NO SIGNALS ON SPANS

SPECIAL ELECTRICAL STRUCTURES

NO SCALE

SES-2

STATE OF CALIFORNIA - DEPARTMENT OF TRANSPORTATION
Caltrans® DIVISION OF ENGINEERING

FUNCTIONAL SUPERVISOR: ALI KIANI

CALCULATED-DESIGNED BY
CHECKED BY
REVISED BY
DATE REVISED

DIVISION OF ENGINEERING SERVICES
DIVISION OF ENGINEERING SERVICES

STANDARD DRAWING
FILE NO. xs18-020
APPROVAL DATE November 2012

LAST REVISION 00-00-00
DATE PLOTTED => 20-OCT-2014
TIME PLOTTED => 13:50

Dist	COUNTY	ROUTE	POST MILES TOTAL PROJECT	SHEET No.	TOTAL SHEETS
03	But	70	24.0/24.5	65	123

M. A. Panchesson 8-11-14
REGISTERED CIVIL ENGINEER DATE

8-11-14
PLANS APPROVAL DATE

REGISTERED PROFESSIONAL ENGINEER M.A. PANCHESSON No. 44125 Exp. 06-30-15 CIVIL STATE OF CALIFORNIA

THE STATE OF CALIFORNIA OR ITS OFFICERS OR AGENTS SHALL NOT BE RESPONSIBLE FOR THE ACCURACY OR COMPLETENESS OF SCANNED COPIES OF THIS PLAN SHEET.

LEGEND

A — Wood Pole with Attachments

—OH··— Overhead Bundle

——→ Guy Anchor

POLE SELECTION TABLE

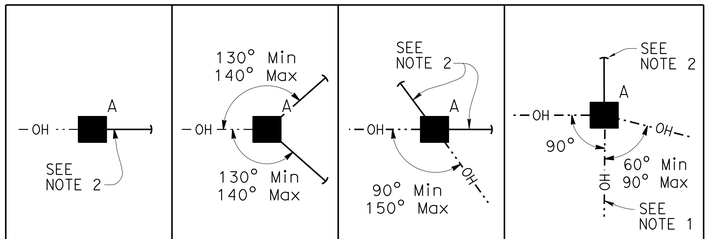

		MAXIMUM d_p	1"	1.5"	2.0"	2.5"	1"	1.5"	2.0"	2.5"	1"	1.5"	2.0"	2.5"	1"	1.5"	2.0"	2.5"
OVERHEAD BUNDLE HORIZONTAL SPAN (Max)	50′	MINIMUM POLE CLASS	H-1	H-1	H-2	H-2	1	1	1	1	1	1	1	H-1	H-2	H-2	H-3	H-3
		POLE EMBEDMENT (E)	10′				9′				9′				11′			
	100′	MINIMUM POLE CLASS	H-2	H-2	H-3	H-4	1	H-1	H-1	H-1	1	H-1	H-2	H-2	H-3	H-3	H-4	H-4
		POLE EMBEDMENT (E)	11′				9′				9′				12′			
	150′	MINIMUM POLE CLASS	H-3	H-3	H-4	H-5	H-1	H-1	H-2	H-2	H-2	H-3	H-3	H-3	H-4	H-5	H-5	H-6
		POLE EMBEDMENT (E)	11′				9′				9′				12′			
	200′	MINIMUM POLE CLASS	H-4	H-4	H-5	H-6	H-1	H-2	H-3	H-3	H-3	H-3	H-4	H-4	H-5	H-6		
		POLE EMBEDMENT (E)	11′				9′				9′				12′			

1. CCTV camera assembly or vehicle detection system
2. Overhead bundle consisting of a ⅜" ø messenger wire and overhead conductors and lashing wire.
3. Luminaire with mast arm
4. Pedestrian pushbutton
5. Signal face with 3 indications or single sheet sign panel (10 SQFT Max)
6. Riser with weather head as required
7. Pull box as required
8. Grounding as required
9. Single section flashing beacon or single sheet sign panel (4 SQFT Max)
10. Single sheet sign panel (4′ x 4′ Max) or signal face with 3 indications
11. Flashing beacon control assembly
12. ½" ø guy wire with white guy marker and strain insulator (for anchorage see "TEMPORARY WOOD POLES-DETAILS No. 2" sheet)

NOTES:

1. In addition to other restrictions on maximum horizontal span, this horizontal span must not exceed 100′.
2. Guy wire in line with opposing span ± 5°.

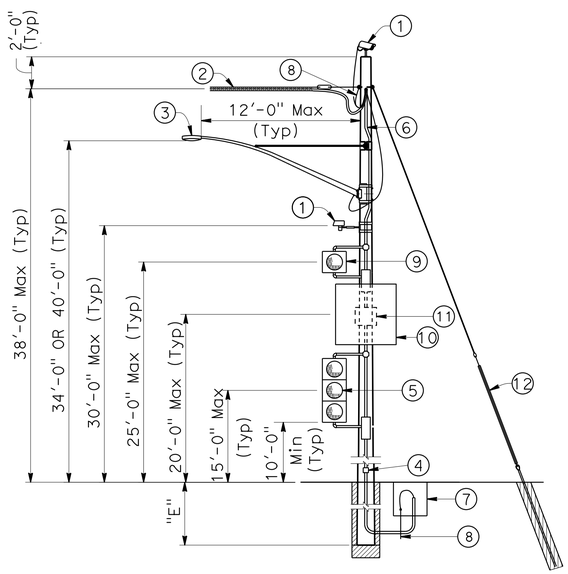

CASE 1G
POLE AT DEAD END
WITH ATTACHMENTS

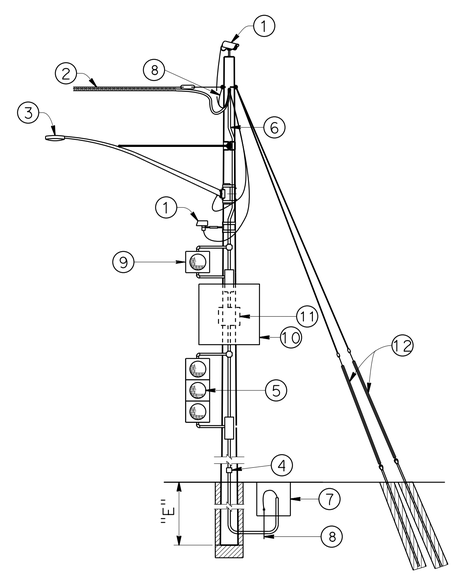

CASE 2G
POLE AT DEAD END
WITH ATTACHMENTS

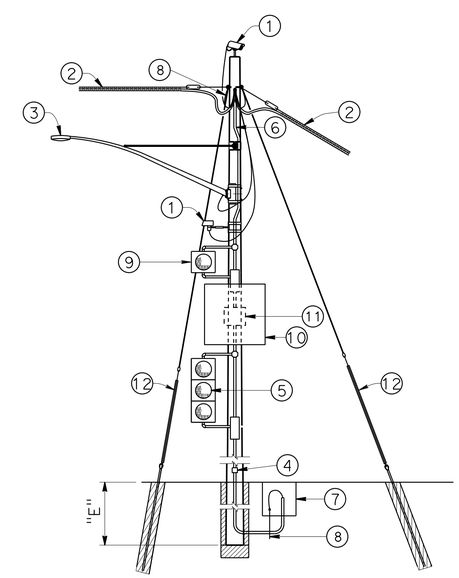

CASE 3G
POLE AT CORNER
WITH ATTACHMENTS

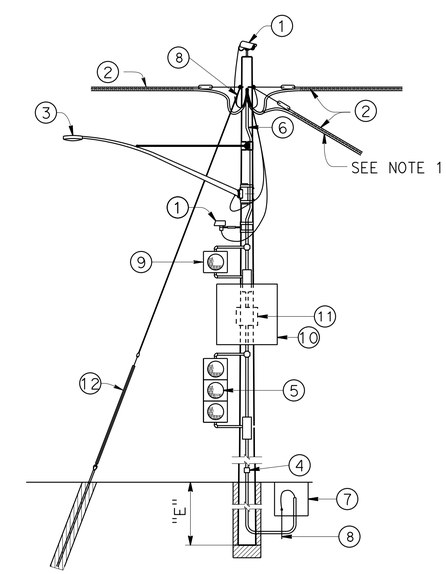

CASE 4G
POLE AT JUNCTION
WITH ATTACHMENTS

TEMPORARY WOOD POLES
GUYED - NO SIGNALS ON SPANS

SPECIAL ELECTRICAL STRUCTURES

NO SCALE

SES-3

STATE OF CALIFORNIA - DEPARTMENT OF TRANSPORTATION
Caltrans® DIVISION OF ENGINEERING

FUNCTIONAL SUPERVISOR: ALI KIANI

CALCULATED-DESIGNED BY | CHECKED BY

DIVISION OF ENGINEERING SERVICES

REVISED BY | DATE REVISED

STANDARD DRAWING
FILE NO. xs18-030
APPROVAL DATE November 2012

LAST REVISION 00-00-00 | DATE PLOTTED => 20-OCT-2014 | TIME PLOTTED => 13:50

Dist	COUNTY	ROUTE	POST MILES TOTAL PROJECT	SHEET No.	TOTAL SHEETS
03	But	70	24.0/24.5	66	123

M. A. Panchesson 8-11-14
REGISTERED CIVIL ENGINEER DATE

8-11-14
PLANS APPROVAL DATE

REGISTERED PROFESSIONAL ENGINEER M.A. PANCHESSON No. 44125 Exp. 06-30-15 CIVIL STATE OF CALIFORNIA

THE STATE OF CALIFORNIA OR ITS OFFICERS OR AGENTS SHALL NOT BE RESPONSIBLE FOR THE ACCURACY OR COMPLETENESS OF SCANNED COPIES OF THIS PLAN SHEET.

LEGEND

- A — Wood Pole with Attachments
- —TS— Overhead Bundle with Signal Faces (See Note 2)
- —OH— Overhead Bundle
- Guy Anchor

POLE SELECTION TABLE

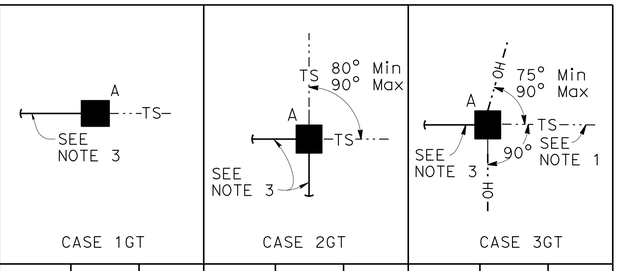

			CASE 1GT			CASE 2GT			CASE 3GT		
		MAXIMUM dp	1"	1.5"	2.0"	1"	1.5"	2.0"	1"	1.5"	2.0"
OVERHEAD BUNDLE HORIZONTAL SPAN Max	50'	MINIMUM POLE CLASS	H-2	H-3	H-3	H-2	H-2	H-2	H-3	H-4	H-4
		POLE EMBEDMENT (E)	10'			10'			11'		
	100'	MINIMUM POLE CLASS	H-3	H-3	H-4	H-2	H-3	H-3	H-4	H-4	H-5
		POLE EMBEDMENT (E)	11'			10'			11'		
	150'	MINIMUM POLE CLASS	H-3	H-4	H-4	H-2	H-3	H-4	H-4	H-5	H-5
		POLE EMBEDMENT (E)	11'			10'			11'		

NOTES:

1. In addition to other restrictions on maximum horizontal span, this horizontal span must not exceed 100'.
2. Maximum of 2 SIGNAL FACES per span within the hatched regions indicated by "LOCATION OF SIGNAL FACES".
3. Guy wire in line with opposing span ± 5°.

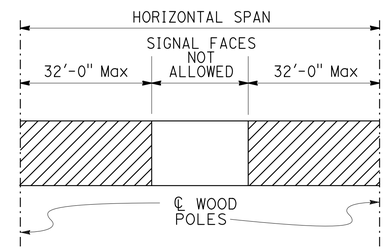

LOCATION OF SIGNAL FACES

1. CCTV camera assembly or vehicle detection system
2. Overhead bundle consisting of 3/8" ø messenger wire and overhead conductors and lashing wire
3. Luminaire with mast arm
4. Pedestrian pushbutton
5. Signal face with 3 indications or single sheet sign panel (10 SQFT Max)
6. Riser with weather head as required
7. Pull box as required
8. Grounding as required
9. 3/8" ø tether wire
10. 1/2" ø guy wire with white guy marker and strain insulator. For anchorage see "TEMPORARY WOOD POLES-DETAILS No. 2" sheet
11. Pedestrian signal head

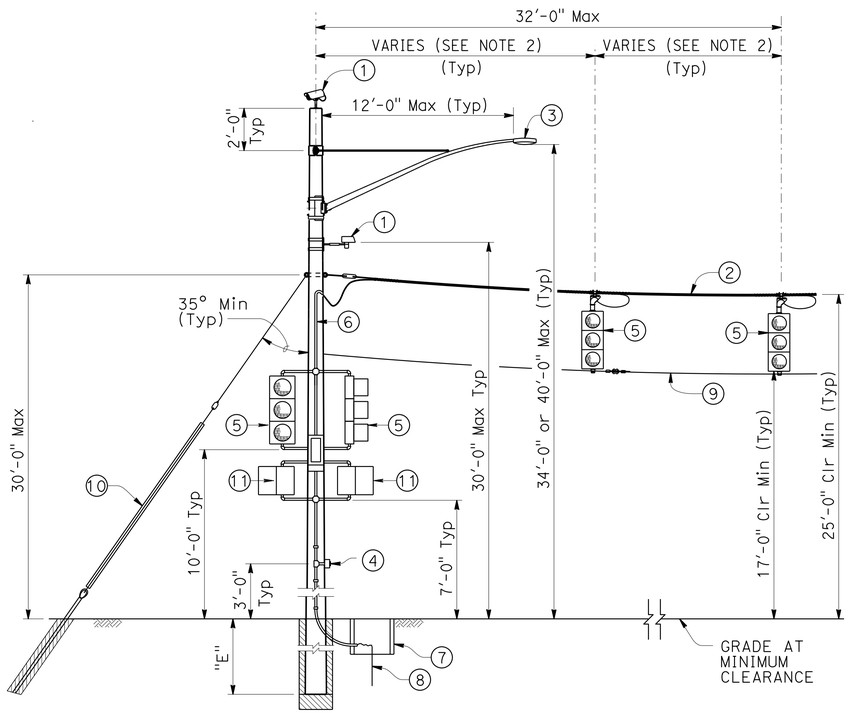

CASE 1GT
POLE AT DEAD END
WITH ATTACHMENTS

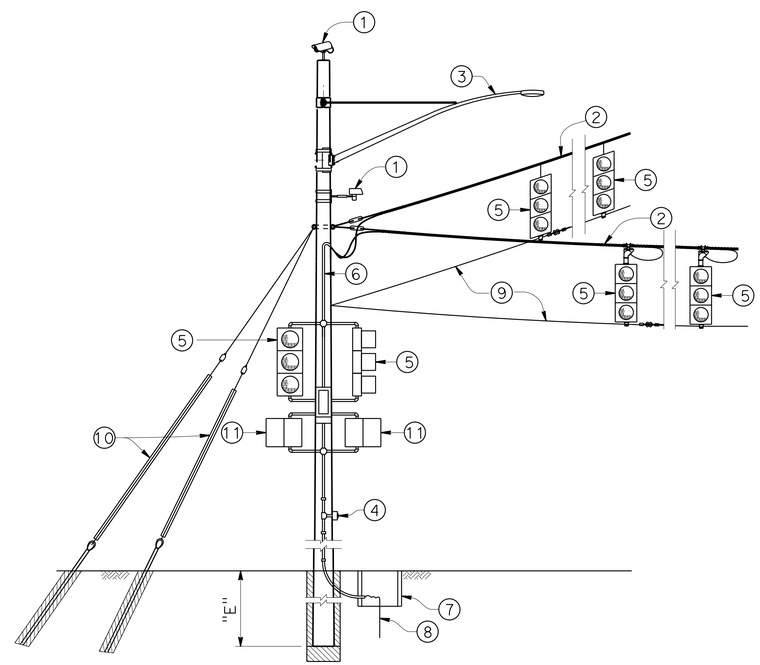

CASE 2GT
POLE AT CORNER
WITH ATTACHMENTS

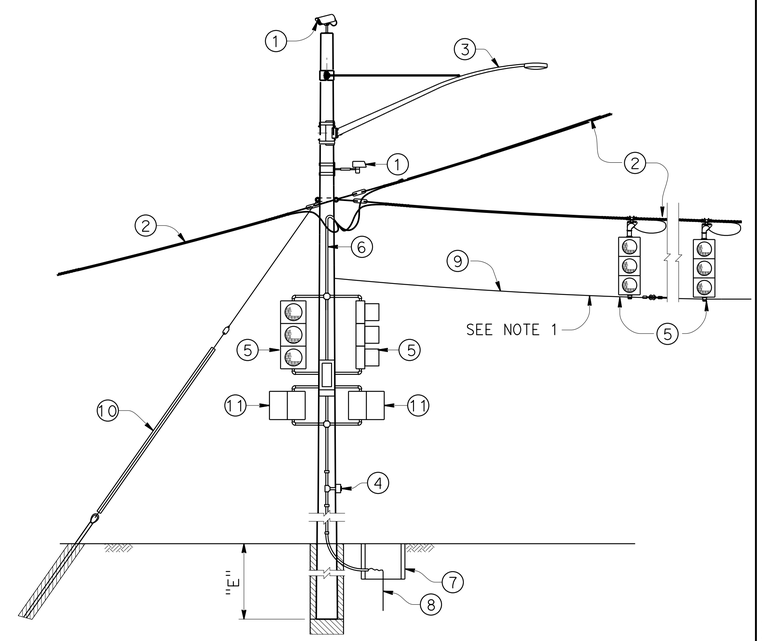

CASE 3GT
POLE AT JUNCTION
WITH ATTACHMENTS

TEMPORARY WOOD POLES
GUYED-WITH SIGNAL FACES ON SPANS

SPECIAL ELECTRICAL STRUCTURES

NO SCALE

SES-4

STATE OF CALIFORNIA - DEPARTMENT OF TRANSPORTATION
Caltrans® DIVISION OF ENGINEERING

FUNCTIONAL SUPERVISOR: ALI KIANI
CALCULATED-DESIGNED BY: DIVISION OF ENGINEERING SERVICES
CHECKED BY: DIVISION OF ENGINEERING SERVICES
REVISED BY / DATE REVISED

STANDARD DRAWING
FILE NO. xs18-040
APPROVAL DATE November 2012

LAST REVISION 00-00-00
DATE PLOTTED => 20-OCT-2014
TIME PLOTTED => 13:50

Dist	COUNTY	ROUTE	POST MILES TOTAL PROJECT	SHEET No.	TOTAL SHEETS
03	But	70	24.0/24.5	67	123

M. A. Panchesson 8-11-14
REGISTERED CIVIL ENGINEER DATE

8-11-14
PLANS APPROVAL DATE

REGISTERED PROFESSIONAL ENGINEER M.A. PANCHESSON No. 44125 Exp. 06-30-15 CIVIL STATE OF CALIFORNIA

THE STATE OF CALIFORNIA OR ITS OFFICERS OR AGENTS SHALL NOT BE RESPONSIBLE FOR THE ACCURACY OR COMPLETENESS OF SCANNED COPIES OF THIS PLAN SHEET.

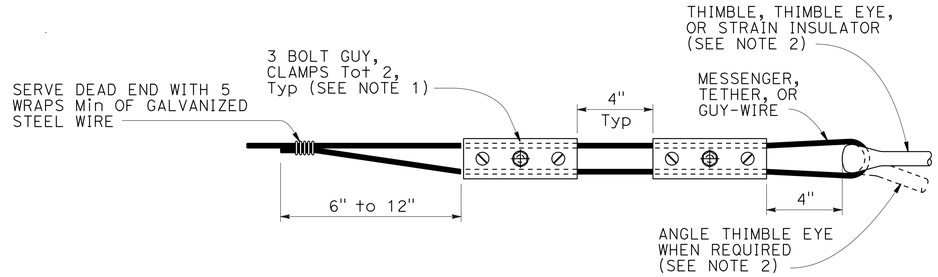

ALTERNATIVE TERMINATION OF MESSENGER WIRES USING GUY CLAMPS

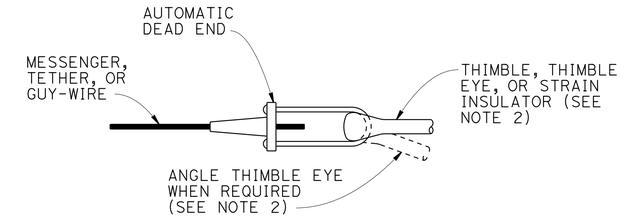

TERMINATION OF WIRES USING AUTOMATIC DEAD END

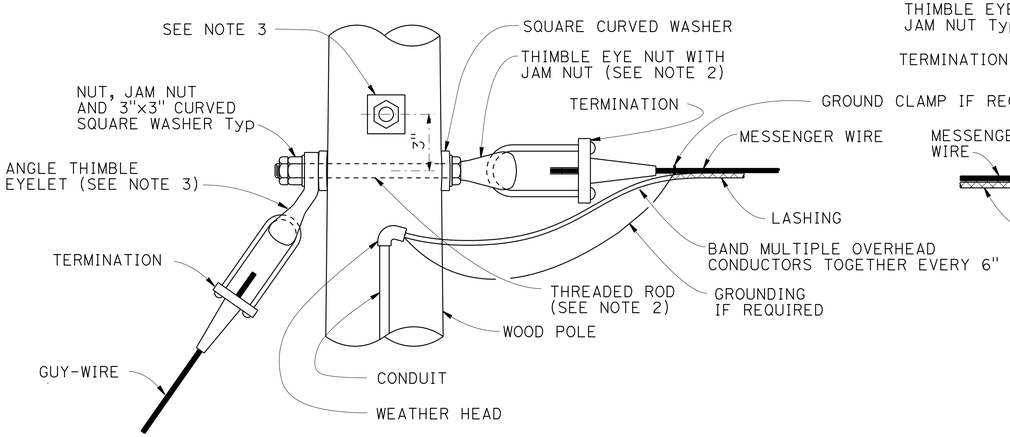

POLE AT DEAD END WITH GUY-WIRE CONNECTION

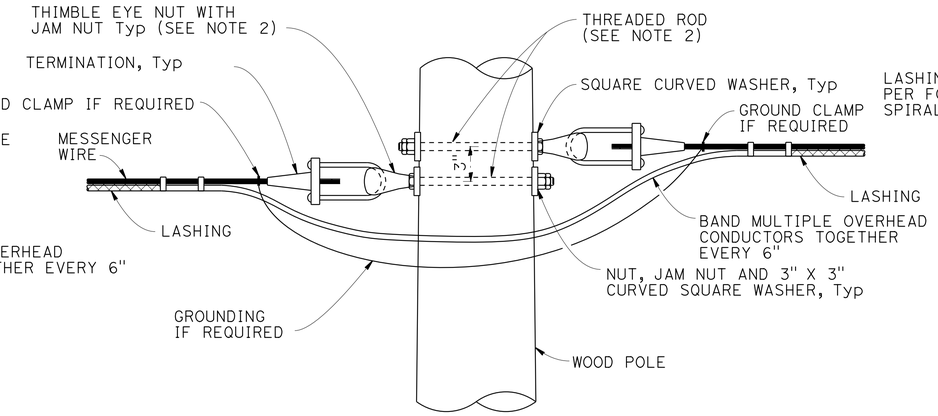

POLE AT TANGENT OR CORNER CONNECTION

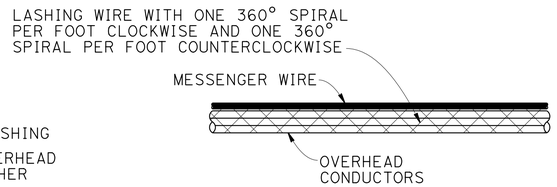

DOUBLE LASHING DETAIL

USE IF d_p IS GREATER THAN 1½"

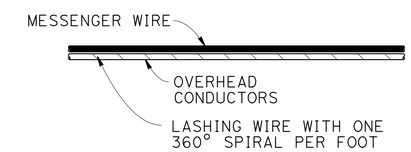

TYPICAL LASHING DETAIL

USE IF d_p IS 1½" OR LESS

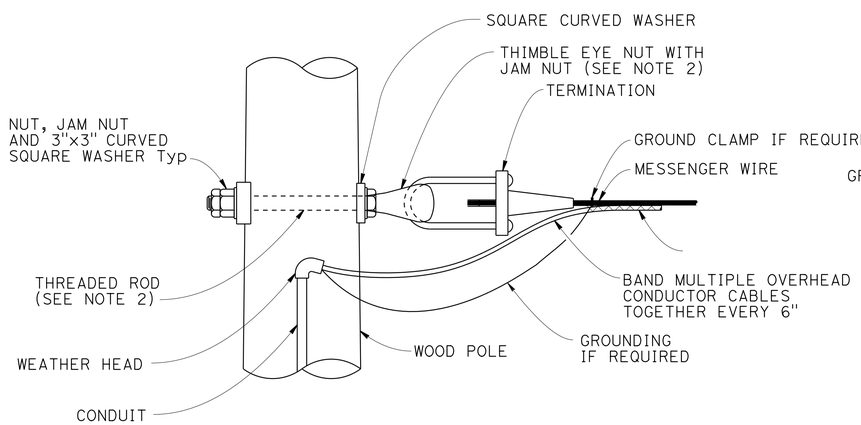

POLE AT DEAD END CONNECTION

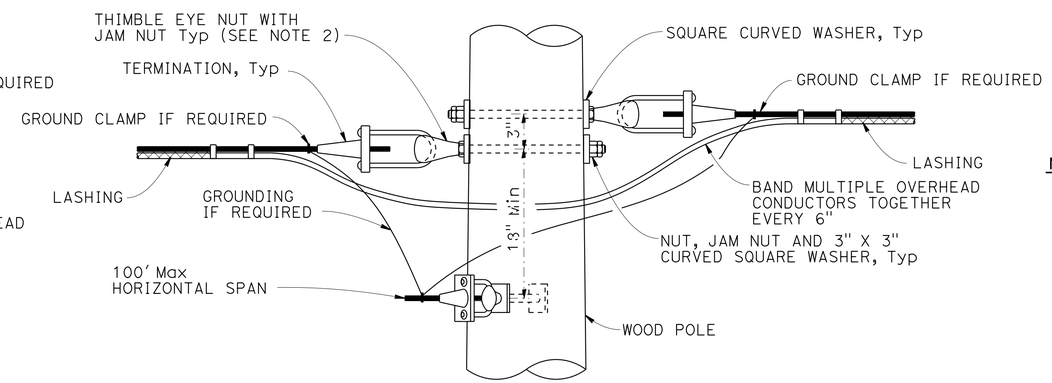

POLE AT JUNCTION CONNECTION

NOTES:

1. For guy wires use 3 clamps.
2. Use ⅝" ø except ¾" ø at guyed wires
3. Install additional angle thimble eyelet at poles with two guy wires.

TEMPORARY WOOD POLES
DETAILS No. 1

SPECIAL ELECTRICAL STRUCTURES

NO SCALE

SES-5

STATE OF CALIFORNIA - DEPARTMENT OF TRANSPORTATION
Caltrans® DIVISION OF ENGINEERING

FUNCTIONAL SUPERVISOR: ALI KIANI

DIVISION OF ENGINEERING SERVICES — REVISED BY — DATE REVISED

DIVISION OF ENGINEERING SERVICES — CALCULATED-DESIGNED BY — CHECKED BY

STANDARD DRAWING
FILE NO. xs18-080-1
APPROVAL DATE November 2012

LAST REVISION 00-00-00 | DATE PLOTTED => 20-OCT-2014 | TIME PLOTTED => 13:50

Dist	COUNTY	ROUTE	POST MILES TOTAL PROJECT	SHEET No.	TOTAL SHEETS
03	But	70	24.0/24.5	68	123

M. A. Panchesson 8-11-14
REGISTERED CIVIL ENGINEER DATE

8-11-14
PLANS APPROVAL DATE

REGISTERED PROFESSIONAL ENGINEER
M.A. PANCHESSON
No. 44125
Exp. 06-30-15
CIVIL
STATE OF CALIFORNIA

THE STATE OF CALIFORNIA OR ITS OFFICERS OR AGENTS SHALL NOT BE RESPONSIBLE FOR THE ACCURACY OR COMPLETENESS OF SCANNED COPIES OF THIS PLAN SHEET.

NOTES:

1. Minimum allowable tension capacity "Qa" = 8,900 lbs.
2. Minimum installation torque "T" = 1780 lbs-ft.
3. Helical anchor detail may be used in place of expanded steel anchors.

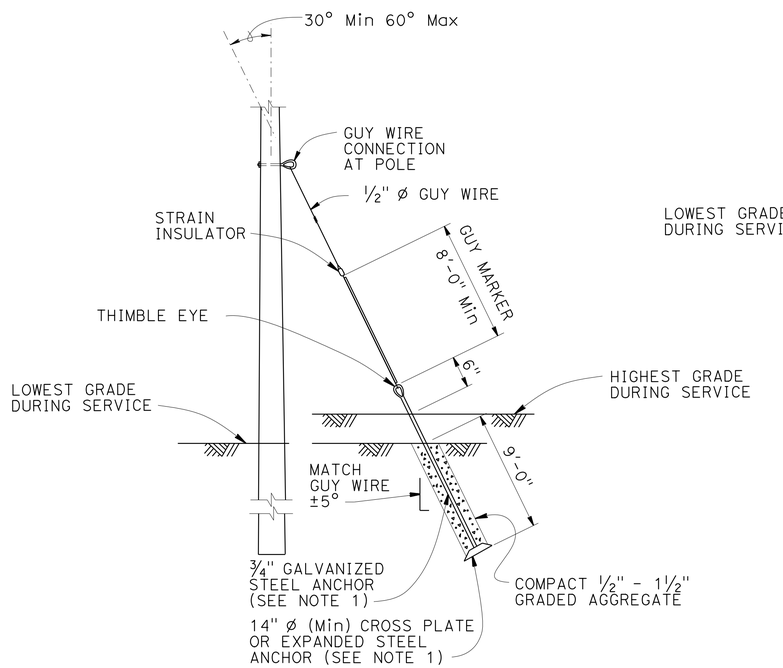

EXPANDED STEEL ANCHOR DETAIL

SEE NOTE 3

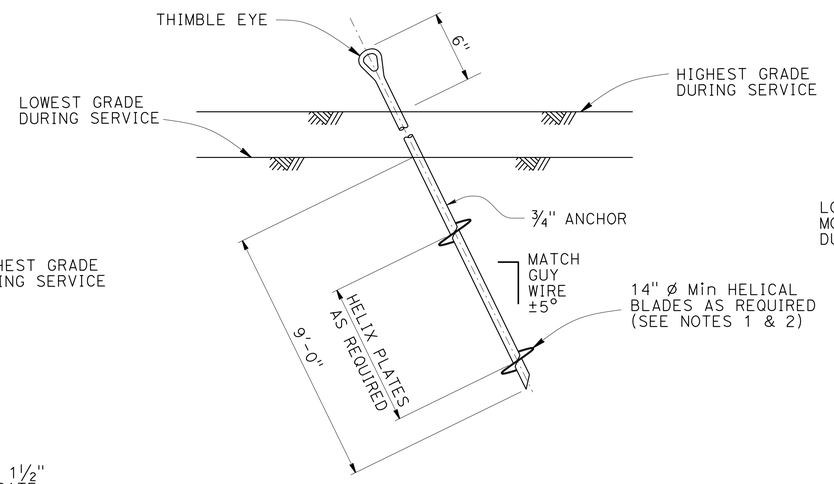

HELICAL ANCHOR DETAIL

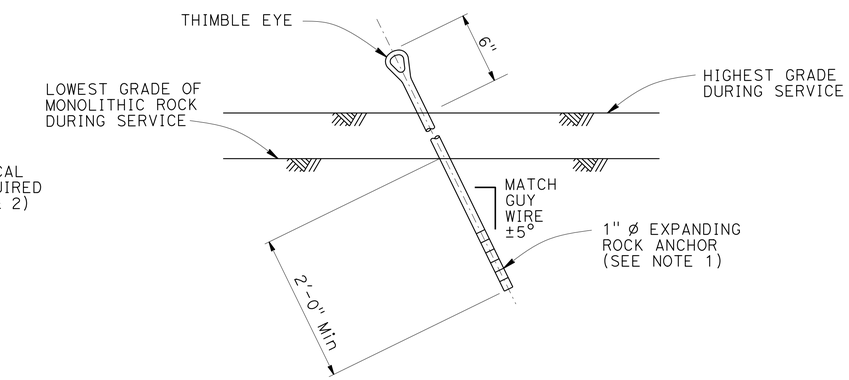

EXPANDING ROCK ANCHOR DETAIL

TEMPORARY WOOD POLES
DETAILS No. 2

SPECIAL ELECTRICAL STRUCTURES

NO SCALE

SES-6

STATE OF CALIFORNIA - DEPARTMENT OF TRANSPORTATION
Caltrans® DIVISION OF ENGINEERING

FUNCTIONAL SUPERVISOR: ALI KIANI

CALCULATED-DESIGNED BY | CHECKED BY | DIVISION OF ENGINEERING SERVICES | REVISED BY | DATE REVISED

STANDARD DRAWING
FILE NO. xs18-080-2
APPROVAL DATE November 2012

LAST REVISION 00-00-00 | DATE PLOTTED => 20-OCT-2014 | TIME PLOTTED => 13:50

Dist	COUNTY	ROUTE	POST MILES TOTAL PROJECT	SHEET No.	TOTAL SHEETS
03	But	70	24.0/24.5	69	123

M. A. Panchesson 8-11-14
REGISTERED CIVIL ENGINEER DATE

8-11-14
PLANS APPROVAL DATE

REGISTERED PROFESSIONAL ENGINEER M.A. PANCHESSON No. 44125 Exp. 06-30-15 CIVIL STATE OF CALIFORNIA

THE STATE OF CALIFORNIA OR ITS OFFICERS OR AGENTS SHALL NOT BE RESPONSIBLE FOR THE ACCURACY OR COMPLETENESS OF SCANNED COPIES OF THIS PLAN SHEET.

NOTES:

1. Luminaire mast arms must be in compliance with Standard Plan ES-6D with noted modifications.
2. Verify pole dimensions at tie-rod attachment height. Fabricate 8" flat bar with "L" Dimension to maintain an open gap between flanges in finished installation.
3. Not all screw heads and bolt heads are shown for clarity.
4. Mast arm not shown for clarity.

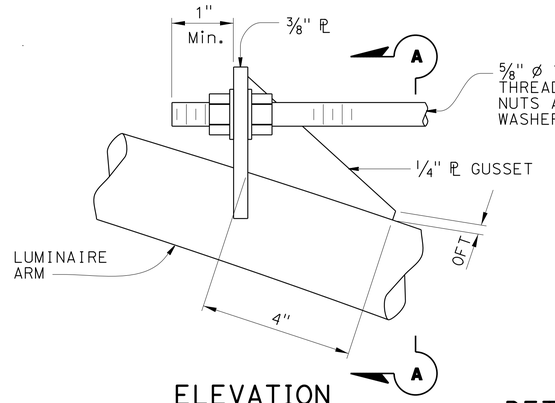

ELEVATION

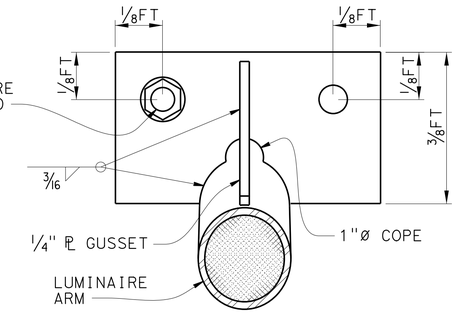

SECTION A-A

DETAIL A
TIE-ROD AT LUMINAIRE ARM
NO SCALE

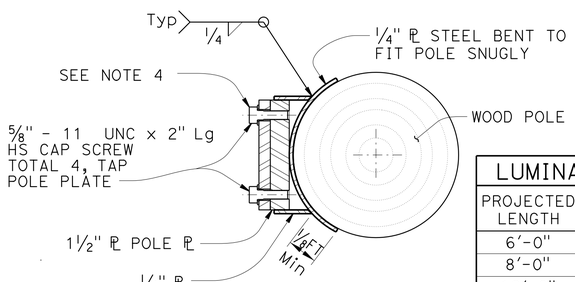

SECTION E-E

LUMINAIRE MAST ARM DATA			
PROJECTED LENGTH	N RISE	Min OD AT POLE	NOMINAL THICKNESS
6'-0"	2'-0"±	3 1/4"	0.1196"
8'-0"	2'-6"±	3 1/2"	
10'-0"	3'-3"±	3 7/8"	
12'-0"	4'-3"±		

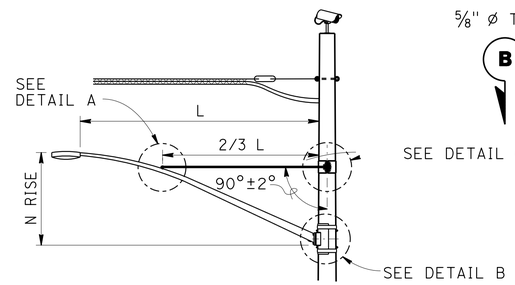

LUMINAIRE MAST ARM

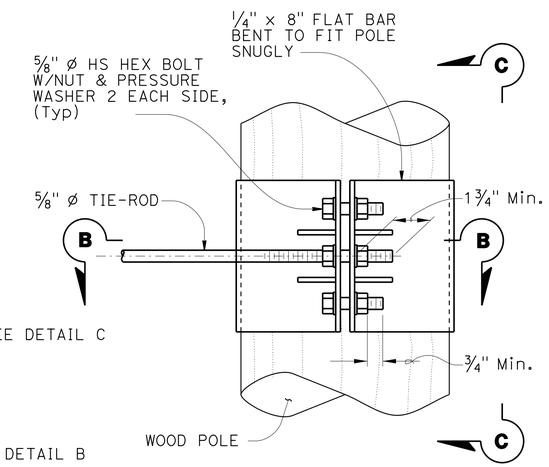

ELEVATION

NOTE:
Not all screw and bolt heads shown for clarity.

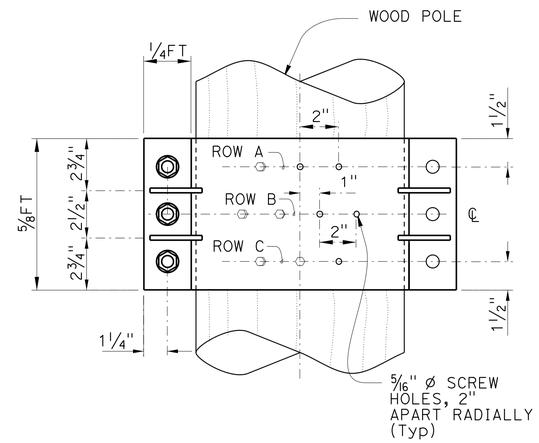

VIEW C-C

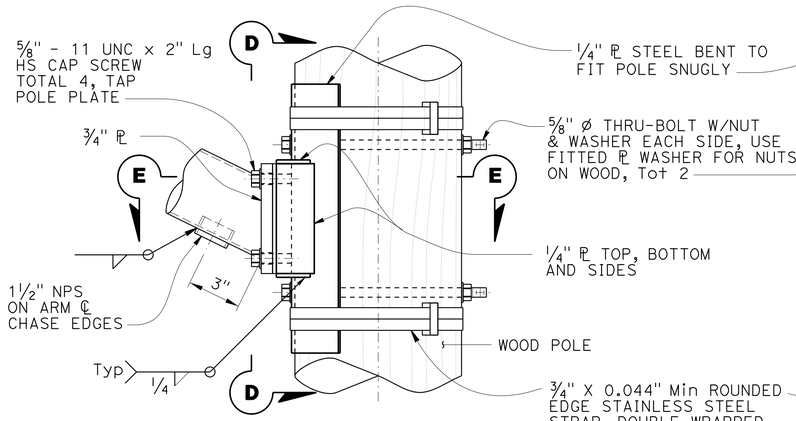

ELEVATION

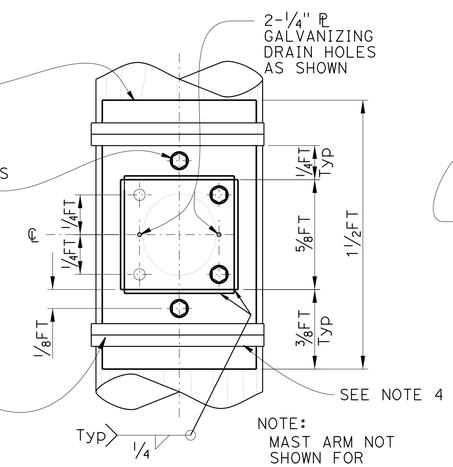

NOTE:
MAST ARM NOT SHOWN FOR CLARITY

VIEW D-D

DETAIL B
ARM CONNECTION DETAILS
NO SCALE

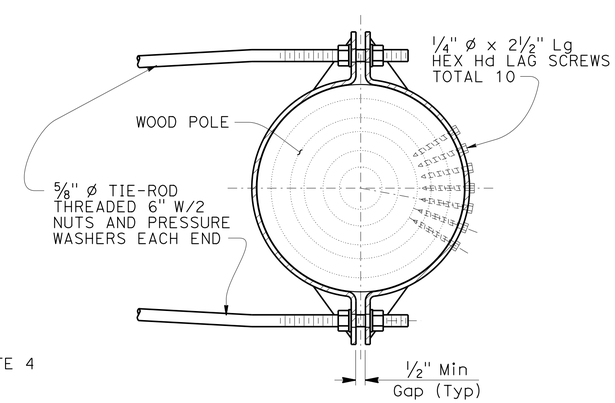

SECTION B-B

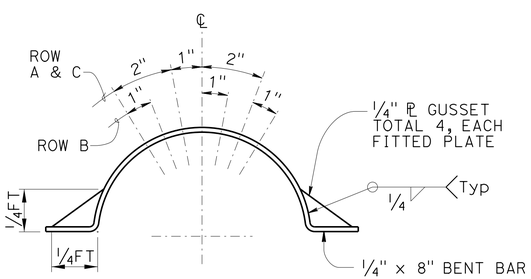

LAG SCREW AND GUSSET PLATE LAYOUT

DETAIL C
TIE-ROD AT POLE
NO SCALE

TEMPORARY WOOD POLES
DETAILS No. 3

SPECIAL ELECTRICAL STRUCTURES

NO SCALE **SES-7**

STATE OF CALIFORNIA - DEPARTMENT OF TRANSPORTATION
Caltrans® DIVISION OF ENGINEERING

FUNCTIONAL SUPERVISOR: ALI KIANI

DIVISION OF ENGINEERING SERVICES — REVISED BY — DATE REVISED
DIVISION OF ENGINEERING SERVICES — CALCULATED-DESIGNED BY — CHECKED BY

STANDARD DRAWING
FILE NO. xs18-080-3
APPROVAL DATE November 2012

LAST REVISION 00-00-00 | DATE PLOTTED => 20-OCT-2014 | TIME PLOTTED => 13:50

Dist	COUNTY	ROUTE	POST MILES TOTAL PROJECT	SHEET No.	TOTAL SHEETS
03	But	70	24.0/24.5	70	123

M. A. Panchesson 8-11-14
REGISTERED CIVIL ENGINEER DATE

8-11-14
PLANS APPROVAL DATE

REGISTERED PROFESSIONAL ENGINEER M.A. PANCHESSON No. 44125 Exp. 06-30-15 CIVIL STATE OF CALIFORNIA

THE STATE OF CALIFORNIA OR ITS OFFICERS OR AGENTS SHALL NOT BE RESPONSIBLE FOR THE ACCURACY OR COMPLETENESS OF SCANNED COPIES OF THIS PLAN SHEET.

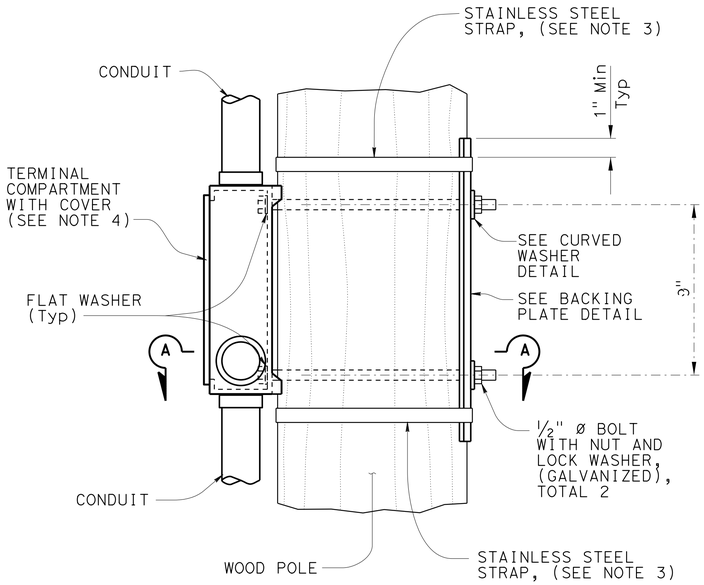

ELEVATION

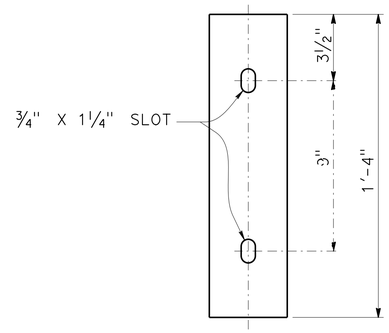

ELEVATION

PLAN

BACKING PLATE DETAIL

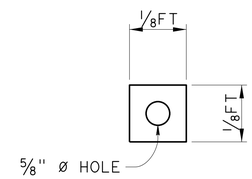

ELEVATION

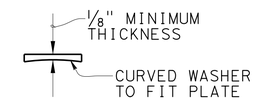

PLAN

CURVED WASHER DETAIL

NOTES:

1. Verify pole dimensions at terminal compartment for fabrication of backing plate and curved washer.
2. Backing plate to be galvanized after fabrication.
3. 3/4" x 0.044" minimum, rounded edge stainless steel straps, double wrapped with 2" long bend under stainless steel strap buckle.
4. For details not shown see Standard Plan ES-4D.

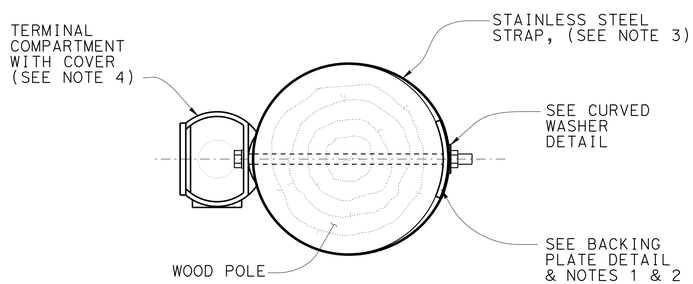

SECTION A-A

SIDE MOUNTING
TERMINAL COMPARTMENT

TEMPORARY WOOD POLES
DETAILS No. 4

SPECIAL ELECTRICAL STRUCTURES

NO SCALE **SES-8**

STANDARD DRAWING
FILE NO. xs18-080-4
APPROVAL DATE November 2012

STATE OF CALIFORNIA - DEPARTMENT OF TRANSPORTATION
Caltrans® DIVISION OF ENGINEERING
FUNCTIONAL SUPERVISOR ALI KIANI
CALCULATED-DESIGNED BY / CHECKED BY
DIVISION OF ENGINEERING SERVICES
REVISED BY / DATE REVISED

LAST REVISION 00-00-00 | DATE PLOTTED => 20-OCT-2014 | TIME PLOTTED => 13:50

Dist	COUNTY	ROUTE	POST MILES TOTAL PROJECT	SHEET No.	TOTAL SHEETS
03	But	70	24.0/24.5	71	123

M. A. Panchesson 8-11-14
REGISTERED CIVIL ENGINEER DATE

8-11-14
PLANS APPROVAL DATE

REGISTERED PROFESSIONAL ENGINEER M.A. PANCHESSON No. 44125 Exp. 06-30-15 CIVIL STATE OF CALIFORNIA

THE STATE OF CALIFORNIA OR ITS OFFICERS OR AGENTS SHALL NOT BE RESPONSIBLE FOR THE ACCURACY OR COMPLETENESS OF SCANNED COPIES OF THIS PLAN SHEET.

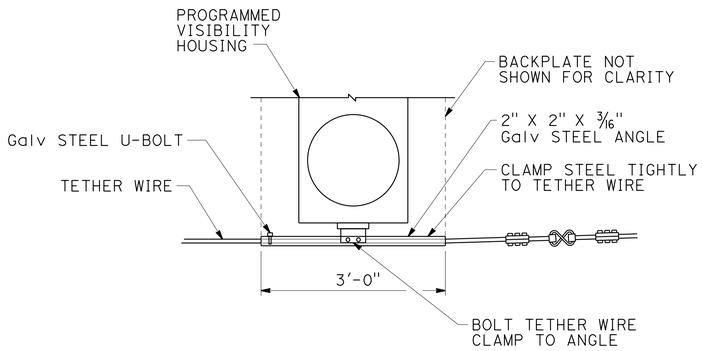

TETHER WIRE ATTACHMENT FOR PROGRAMMED VISIBILITY SIGNAL FACE

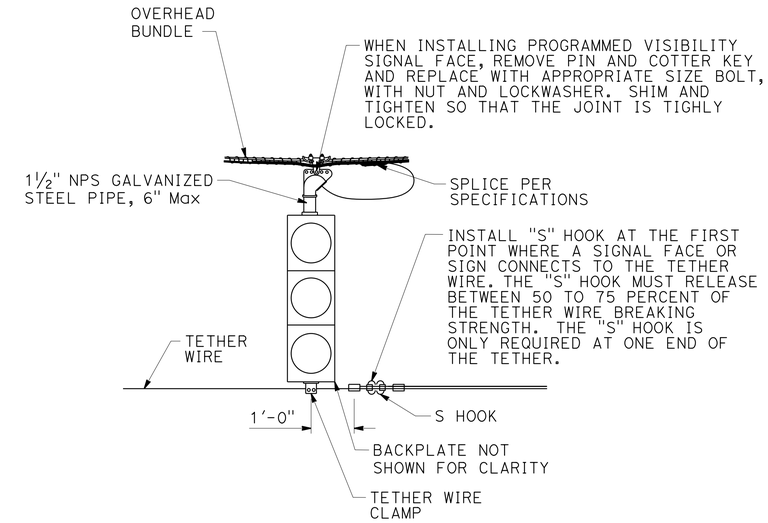

SIGNAL FACE SUPPORT

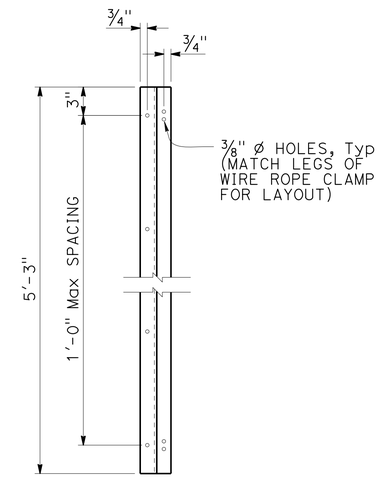

Z-BAR ELEVATION

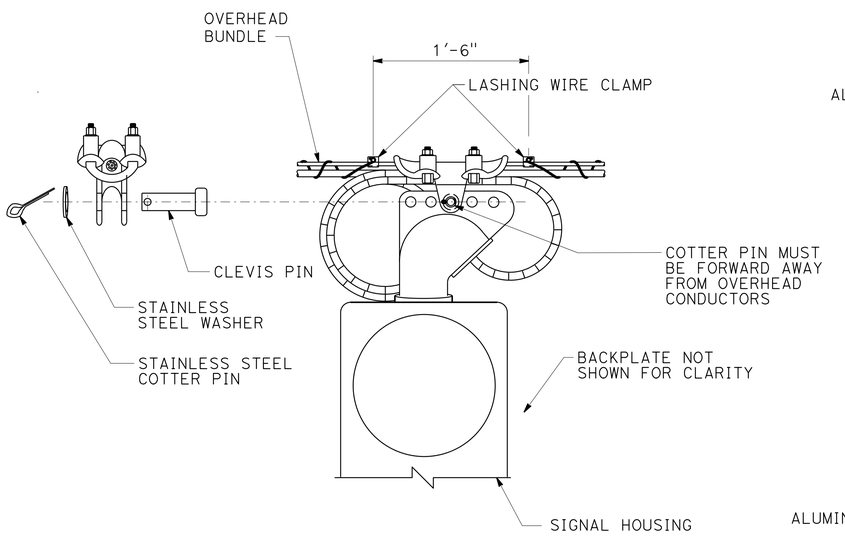

MESSENGER WIRE CLAMP COTTER PIN DETAIL

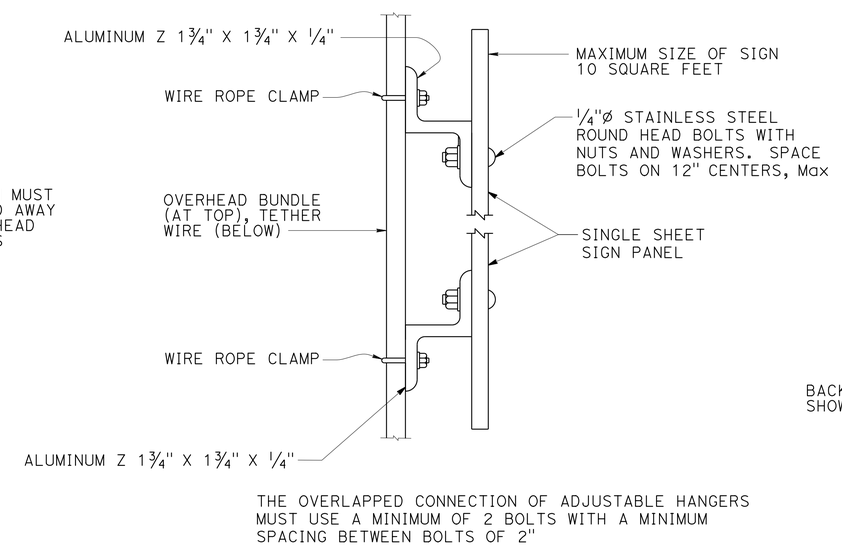

SIGN MOUNTING DETAIL

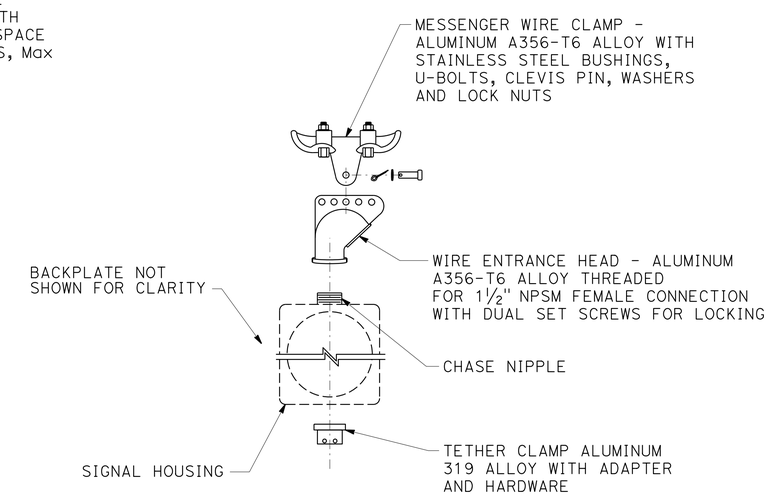

SIGNAL FACE SUPPORT EXPLODED VIEW

TEMPORARY WOOD POLES
DETAILS No. 5

SPECIAL ELECTRICAL STRUCTURES

NO SCALE

SES-9

STATE OF CALIFORNIA - DEPARTMENT OF TRANSPORTATION
Caltrans® DIVISION OF ENGINEERING

FUNCTIONAL SUPERVISOR: ALI KIANI

CALCULATED-DESIGNED BY | CHECKED BY
DIVISION OF ENGINEERING SERVICES | DIVISION OF ENGINEERING SERVICES
REVISED BY | DATE REVISED

STANDARD DRAWING
FILE NO. xs18-080-5
APPROVAL DATE November 2012

LAST REVISION 00-00-00 | DATE PLOTTED => 20-OCT-2014 | TIME PLOTTED => 13:50

M

Maint	MAINTENANCE
Max	MAXIMUM
MB	METAL BEAM
MBB	METAL BEAM BARRIER
MBGR	METAL BEAM GUARD RAILING
Med	MEDIAN
MGS	MIDWEST GUARDRAIL SYSTEM
MH	MANHOLE
Min	MINIMUM
Misc	MISCELLANEOUS
Misc I & S	MISCELLANEOUS IRON AND STEEL
Mkr	MARKER
Mod	MODIFIED,
	MODIFY
Mon	MONUMENT
MP	METAL PLATE
MPGR	METAL PLATE GUARD RAILING
MR	MOVEMENT RATING
MSE	MECHANICALLY STABILIZED EMBANKMENT
Mt	MOUNTAIN, MOUNT
Mtl	MATERIAL
MVP	MAINTENANCE VEHICLE PULLOUT

N

N	NORTH
NB	NORTHBOUND
No.	NUMBER (MUST HAVE PERIOD)
Nos.	NUMBERS (MUST HAVE PERIOD)
NPS	NOMINAL PIPE SIZE
NS	NEAR SIDE
NSP	NEW STANDARD PLAN
NTS	NOT TO SCALE

O

Oblr	OBLITERATE
OC	OVERCROSSING
OD	OUTSIDE DIAMETER
OF	OUTSIDE FACE
OG	ORIGINAL GROUND
OGAC	OPEN GRADED ASPHALT CONCRETE
OGFC	OPEN GRADED FRICTION COURSE
OH	OVERHEAD
OHWM	ORDINARY HIGH WATER MARK
O-O	OUT TO OUT
Opp	OPPOSITE
OSD	OVERSIDE DRAIN

P

p	PAGE
PAP	PERFORATED ALUMINUM PIPE
PB	PULL BOX
PC	POINT OF CURVATURE,
	PRECAST
PCC	POINT OF COMPOUND CURVE,
	PORTLAND CEMENT CONCRETE
PCMS	PORTABLE CHANGEABLE MESSAGE SIGN
PCP	PERFORATED CONCRETE PIPE,
	PRESTRESSED CONCRETE PIPE
PCVC	POINT OF COMPOUND VERTICAL CURVE
PEC	PERMIT TO ENTER AND CONSTRUCT
Ped	PEDESTRIAN
Ped OC	PEDESTRIAN OVERCROSSING
Ped UC	PEDESTRIAN UNDERCROSSING
Perm Mtl	PERMEABLE MATERIAL

P continued

PG	PROFILE GRADE
PI	POINT OF INTERSECTION
PJP	PARTIAL JOINT PENETRATION
Pkwy	PARKWAY
ℙ,PL	PLATE
P/L	PROPERTY LINE
PM	POST MILE,
	TIME FROM NOON TO MIDNIGHT
PN	PAVING NOTCH
POC	POINT OF HORIZONTAL CURVE
POT	POINT OF TANGENT
POVC	POINT OF VERTICAL CURVE
PP	PIPE PILE,
	PLASTIC PIPE,
	POWER POLE
PPL	PREFORMED PERMEABLE LINER
PPP	PERFORATED PLASTIC PIPE
PRC	POINT OF REVERSE CURVE
PRF	PAVEMENT REINFORCING FABRIC
PRVC	POINT OF REVERSE VERTICAL CURVE
PS&E	PLANS, SPECIFICATIONS AND ESTIMATES
PS, P/S	PRESTRESSED
PSP	PERFORATED STEEL PIPE
PT	POINT OF TANGENCY
PVC	POLYVINYL CHLORIDE
Pvmt	PAVEMENT

Q

Qty	QUANTITY

R

R	RADIUS
R & D	REMOVE AND DISPOSE
R & S	REMOVE AND SALVAGE
R/C	RATE OF CHANGE
RCA	REINFORCED CONCRETE ARCH
RCB	REINFORCED CONCRETE BOX
RCP	REINFORCED CONCRETE PIPE
RCPA	REINFORCED CONCRETE PIPE ARCH
Rd	ROAD
Reinf	REINFORCED,
	REINFORCEMENT,
	REINFORCING
Rel	RELOCATE
Repl	REPLACEMENT
Ret	RETAINING
Rev	REVISED, REVISION
Rdwy	ROADWAY
RHMA	RUBBERIZED HOT MIX ASPHALT
Riv	RIVER
RM	ROAD-MIXED
RP	RADIUS POINT,
	REFERENCE POINT
RR	RAILROAD
RSP	ROCK SLOPE PROTECTION,
	REVISED STANDARD PLAN
Rt	RIGHT
Rte	ROUTE
RW	REDWOOD,
	RETAINING WALL
R/W	RIGHT OF WAY
Rwy	RAILWAY

S

S	SOUTH,
	SUPPLEMENT
SAE	STRUCTURE APPROACH EMBANKMENT
Salv	SALVAGE
SAPP	STRUCTURAL ALUMINUM PLATE PIPE
SB	SOUTHBOUND
SC	SAND CUSHION
SCSP	SLOTTED CORRUGATED STEEL PIPE
SD	STORM DRAIN
Sec	SECOND,
	SECTION
Sep	SEPARATION
SG	SUBGRADE
Shld	SHOULDER
Sht	SHEET
Sim	SIMILAR
℄	STATION LINE
SM	SELECTED MATERIAL
Spec	SPECIAL,
	SPECIFICATIONS
SPP	SLOTTED PLASTIC PIPE
SS	SLOPE STAKE
SSBM	STRAP AND SADDLE BRACKET METHOD
SSD	STRUCTURAL SECTION DRAIN
SSPA	STRUCTURAL STEEL PLATE ARCH
SSPP	STRUCTURAL STEEL PLATE PIPE
SSPPA	STRUCTURAL STEEL PLATE PIPE ARCH
SSRP	STEEL SPIRAL RIB PIPE
St	STREET
Sta	STATION
STBB	SINGLE THRIE BEAM BARRIER
Std	STANDARD
Str	STRUCTURE
Surf	SURFACING
SW	SIDEWALK,
	SOUND WALL
Swr	SEWER
Sym	SYMMETRICAL
S4S	SURFACE 4 SIDES

T

T	SEMI-TANGENT
Tan	TANGENT
TBB	THRIE BEAM BARRIER
Tbr	TIMBER
TC	TOP OF CURB
TCB	TRAFFIC CONTROL BOX
TCE	TEMPORARY CONSTRUCTION EASEMENT
Tel	TELEPHONE
Temp	TEMPORARY
TG	TOP OF GRADE
Tot	TOTAL
TP	TELEPHONE POLE
TPB	TREATED PERMEABLE BASE
TPM	TREATED PERMEABLE MATERIAL
Trans	TRANSITION

T continued

TS	TRANSVERSE,
	TRAFFIC SIGNAL,
	TUBULAR STEEL
Typ	TYPICAL

U

UC	UNDERCROSSING
UD	UNDERDRAIN
UG	UNDERGROUND
UON	UNLESS OTHERWISE NOTED
UP	UNDERPASS

V

V	VALVE,
	DESIGN SPEED
Var	VARIABLE,
	VARIES
VC	VERTICAL CURVE
VCP	VITRIFIED CLAY PIPE
Vert	VERTICAL
Via	VIADUCT
Vol	VOLUME

W

W	WEST,
	WIDTH
WB	WESTBOUND
WH	WEEP HOLE
WM	WIRE MESH
WS	WATER SURFACE
WSP	WELDED STEEL PIPE
Wt	WEIGHT
WV	WATER VALVE
WW	WINGWALL
WWLOL	WINGWALL LAYOUT LINE

X

X Sec	CROSS SECTION
Xing	CROSSING

Y

Yr	YEAR
Yrs	YEARS

Dist	COUNTY	ROUTE	POST MILES TOTAL PROJECT	SHEET No.	TOTAL SHEETS
03	But	70	24.0/24.5	72	123

Grace M. Tsushima
REGISTERED CIVIL ENGINEER

July 19, 2013
PLANS APPROVAL DATE

REGISTERED PROFESSIONAL ENGINEER Grace M. Tsushima No. C49814 Exp. 9-30-14 CIVIL STATE OF CALIFORNIA

THE STATE OF CALIFORNIA OR ITS OFFICERS OR AGENTS SHALL NOT BE RESPONSIBLE FOR THE ACCURACY OR COMPLETENESS OF SCANNED COPIES OF THIS PLAN SHEET.

TO ACCOMPANY PLANS DATED 8-11-14

UNIT OF MEASUREMENT SYMBOLS:

Some of the symbols used in the project plan quantity tables and in the Bid Item List are:

TABLE A

SYMBOL USED	DEFINITIONS
ACRE	ACRE
CF	CUBIC FOOT
CY	CUBIC YARD
EA	EACH
GAL	GALLON
LB	POUND
LF	LINEAR FOOT
SQFT	SQUARE FOOT
SQYD	SQUARE YARD
STA	100 FEET
TAB	TABLET
TON	2,000 POUNDS

Some of the symbols used in the plans other than in the project plan quantity tables are:

TABLE B

SYMBOL USED	DEFINITIONS
ksi	KIPS PER SQUARE INCH
ksf	KIPS PER SQUARE FOOT
psi	POUNDS PER SQUARE INCH
psf	POUNDS PER SQUARE FOOT
lb/ft^3, pcf	POUNDS PER CUBIC FOOT
tsf	TONS PER SQUARE FOOT
mph, MPH *	MILES PER HOUR
ø	NOMINAL DIAMETER
oz	OUNCE
lb	POUND
kip	1,000 POUNDS
cal	CALORIE
ft	FOOT OR FEET
gal	GALLON

* For use on a sign panel only

STATE OF CALIFORNIA
DEPARTMENT OF TRANSPORTATION

ABBREVIATIONS (SHEET 2 OF 2)

NO SCALE

RSP A10B DATED JULY 19, 2013 SUPERSEDES STANDARD PLAN A10B DATED MAY 20, 2011 - PAGE 2 OF THE STANDARD PLANS BOOK DATED 2010.

REVISED STANDARD PLAN RSP A10B

2010 REVISED STANDARD PLAN RSP A10B

6-7-13

Dist	COUNTY	ROUTE	POST MILES TOTAL PROJECT	SHEET No.	TOTAL SHEETS
03	But	70	24.0/24.5	73	123

REGISTERED CIVIL ENGINEER

July 20, 2012
PLANS APPROVAL DATE

REGISTERED PROFESSIONAL ENGINEER
Roberta L. McLaughlin
No. C40375
Exp. 3-31-13
CIVIL
STATE OF CALIFORNIA

THE STATE OF CALIFORNIA OR ITS OFFICERS OR AGENTS SHALL NOT BE RESPONSIBLE FOR THE ACCURACY OR COMPLETENESS OF SCANNED COPIES OF THIS PLAN SHEET.

TO ACCOMPANY PLANS DATED 8-11-14

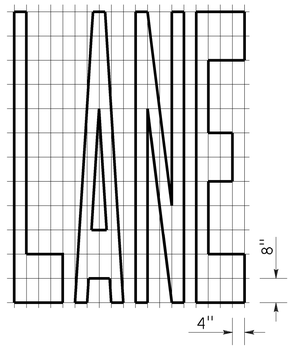

A=24 ft^2

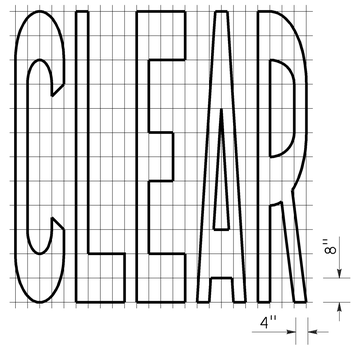

A=27 ft^2

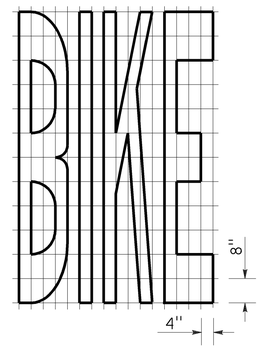

A=21 ft^2

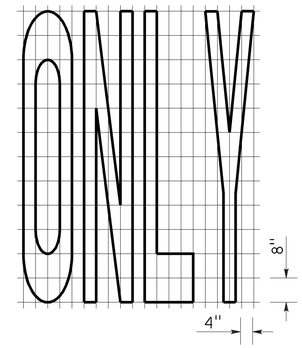

A=22 ft^2

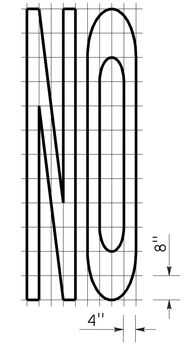

A=14 ft^2

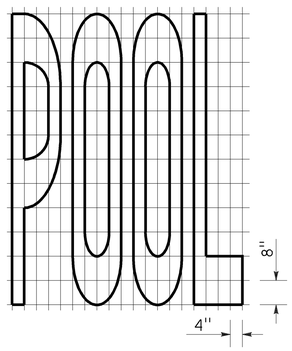

A=23 ft^2

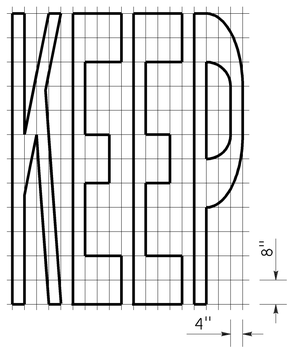

A=24 ft^2

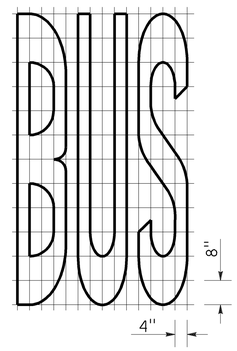

A=20 ft^2

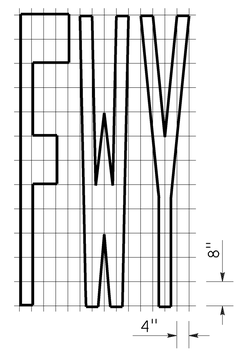

A=16 ft^2

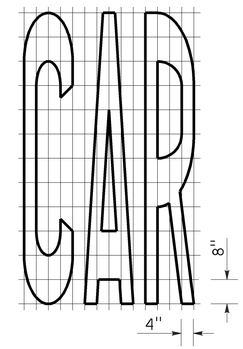

A=17 ft^2

WORD MARKINGS			
ITEM	ft^2	ITEM	ft^2
LANE	24	NO	14
POOL	23	BIKE	21
CAR	17	BUS	20
CLEAR	27	ONLY	22
KEEP	24	FWY	16

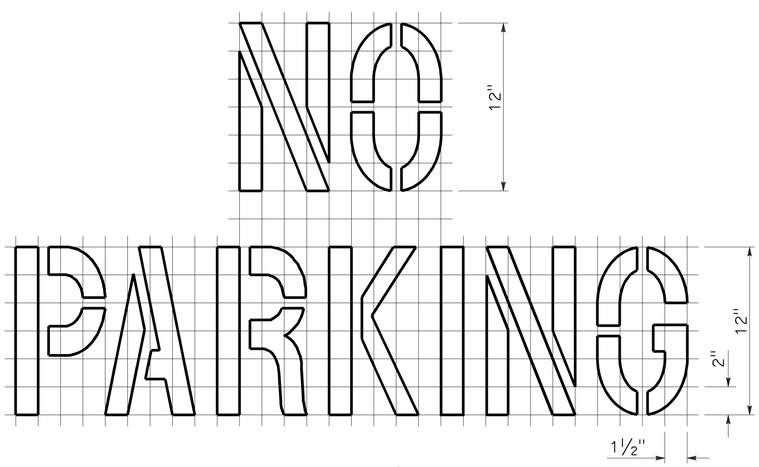

A=2 ft^2
See Notes 6 and 7

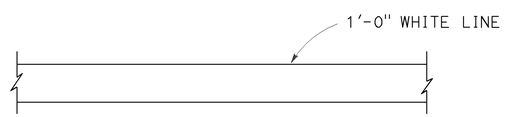

LIMIT LINE (STOP LINE)

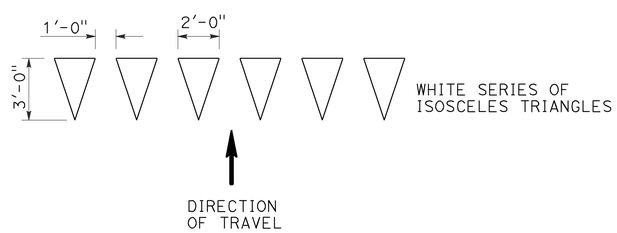

YIELD LINE

NOTES:

1. If a message consists of more than one word, it should read "UP", i.e., the first word should be nearest the driver.
2. The space between words should be at least four times the height of the characters for low speed roads, but not more than ten times the height of the characters. The space may be reduced appropriately where there is limited space because of local conditions.
3. Minor variations in dimensions may be accepted by the Engineer.
4. Portions of a letter, number or symbol may be separated by connecting segments not to exceed 2" in width.
5. The words "NO PARKING" pavement marking is to be used for parking facilities. For typical locations of markings, see Standard Plans A90A and A90B.
6. The words "NO PARKING", shall be painted in white letters no less than 1'-0" high on a contrasting background and located so that it is visible to traffic enforcement officials.

STATE OF CALIFORNIA
DEPARTMENT OF TRANSPORTATION

PAVEMENT MARKINGS
WORDS, LIMIT AND YIELD LINES

NO SCALE

RSP A24E DATED JULY 20, 2012 SUPERSEDES STANDARD PLAN A24E
DATED MAY 20, 2011 - PAGE 17 OF THE STANDARD PLANS BOOK DATED 2010.

REVISED STANDARD PLAN RSP A24E

2010 REVISED STANDARD PLAN RSP A24E

6-12-12

Dist	COUNTY	ROUTE	POST MILES TOTAL PROJECT	SHEET No.	TOTAL SHEETS
03	But	70	24.0/24.5	74	123

Randell D. Hiatt
REGISTERED CIVIL ENGINEER

July 19, 2013
PLANS APPROVAL DATE

REGISTERED PROFESSIONAL ENGINEER
Randell D. Hiatt
No. C50200
Exp. 6-30-15
CIVIL
STATE OF CALIFORNIA

THE STATE OF CALIFORNIA OR ITS OFFICERS OR AGENTS SHALL NOT BE RESPONSIBLE FOR THE ACCURACY OR COMPLETENESS OF SCANNED COPIES OF THIS PLAN SHEET.

TO ACCOMPANY PLANS DATED 8-11-14

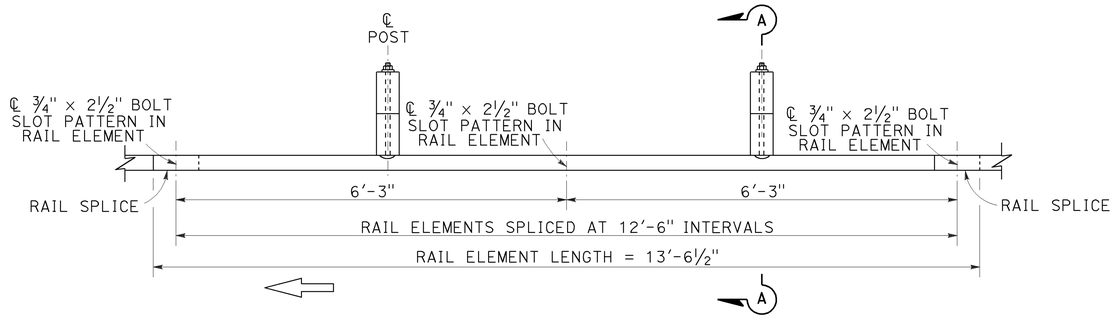

PLAN

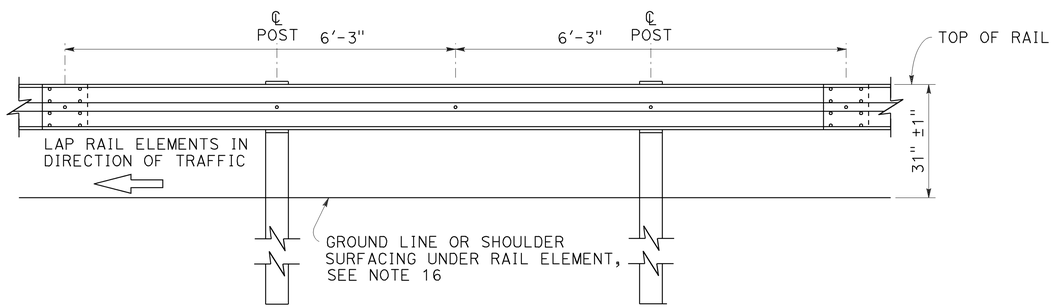

ELEVATION

MIDWEST GUARDRAIL SYSTEM WITH WOOD POST AND BLOCKS

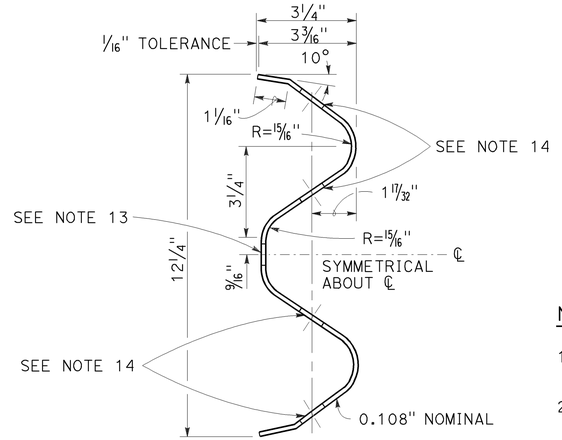

SECTION THRU RAIL ELEMENT

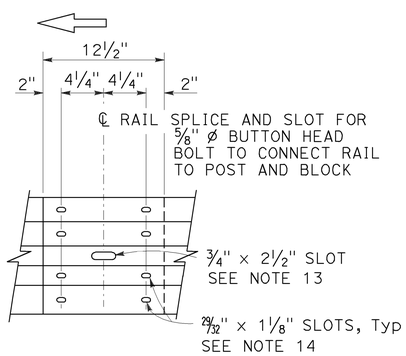

ELEVATION

RAIL ELEMENT SPLICE DETAIL

a) Connect the over lapped end of the rail elements with ⅝" ø × 1⅜" button head oval shoulder splice bolts inserted into the 29⁄32" × 1⅛" slots and bolted together with ⅝" ø recessed hex nuts. Recess of hex nut points toward rail element. A total of 8 bolts and nuts are to be used at each rail splice connection.

b) The ends of the rail elements are to be overlapped in the direction of traffic (see details).

c) Where end cap is to be attached to the end of a rail element, a total of 4 of the above described splice bolts and nuts are to be used.

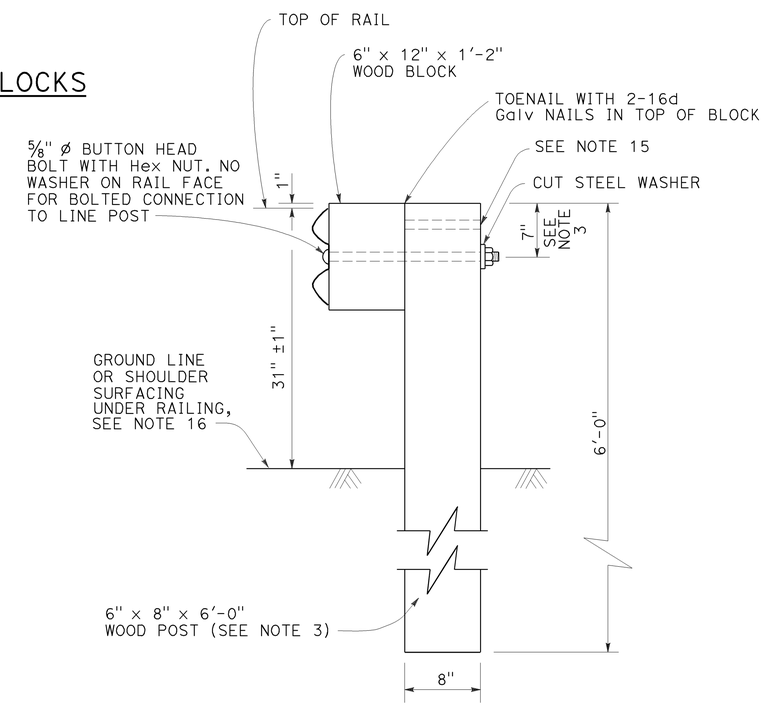

SECTION A-A

TYPICAL WOOD LINE POST INSTALLATION

See Note 4

NOTES:

1. For details of steel post installations, see Revised Standard Plan RSP A77L2.
2. For details of standard hardware used to construct MGS, see Revised Standard Plan RSP A77M1.
3. For details of wood posts and wood blocks used to construct MGS, see Revised Standard Plan RSP A77N1.
4. For additional installation details, see Revised Standard Plan RSP A77N3.
5. MGS post spacing to be 6'-3" center to center, except as otherwise noted.
6. For MGS typical layouts, see the A77P, A77Q and A77R Series of Standard Plans.
7. If railing is connected to terminal system end treatment, use 31" height terminal system end treatment.
8. For MGS end anchor details, see Revised Standard Plans RSP A77S1 and RSP A77T2.
9. For details of MGS transition to bridge railing, see Revised Standard Plan RSP A77U4.
10. For additional details of MSG connection to bridge railing, see Revised Standard Plans RSP A77U1, RSP A77U2 and RSP A77V1.
11. For MGS connection details to abutments and walls, see Revised Standard Plan RSP A77U3.
12. For typical MGS delineation and dike positioning details, see Revised Standard Plan RSP A77N4.
13. Slotted hole for bolted connection of rail element to block and post. See "Section Thru Rail Element".
14. Slotted holes for splice bolts to overlap ends of rail element. See "Section Thru Rail Element".
15. Additional hole in uppermost portion of line post is for potential future adjustments of railing height. See Revised Standard Plan RSP A77N1.
16. Install posts in soil.

STATE OF CALIFORNIA
DEPARTMENT OF TRANSPORTATION

MIDWEST GUARDRAIL SYSTEM STANDARD RAILING SECTION (WOOD POST WITH WOOD BLOCK)

NO SCALE

RSP A77L1 DATED JULY 19, 2013 SUPPLEMENTS STANDARD PLANS BOOK DATED 2010.

REVISED STANDARD PLAN RSP A77L1

2010 REVISED STANDARD PLAN RSP A77L1

7-3-13

Dist	COUNTY	ROUTE	POST MILES TOTAL PROJECT	SHEET No.	TOTAL SHEETS
03	But	70	24.0/24.5	75	123

Randell D. Hiatt
REGISTERED CIVIL ENGINEER

July 19, 2013
PLANS APPROVAL DATE

REGISTERED PROFESSIONAL ENGINEER
Randell D. Hiatt
No. C50200
Exp. 6-30-15
CIVIL
STATE OF CALIFORNIA

THE STATE OF CALIFORNIA OR ITS OFFICERS OR AGENTS SHALL NOT BE RESPONSIBLE FOR THE ACCURACY OR COMPLETENESS OF SCANNED COPIES OF THIS PLAN SHEET.

TO ACCOMPANY PLANS DATED 8-11-14

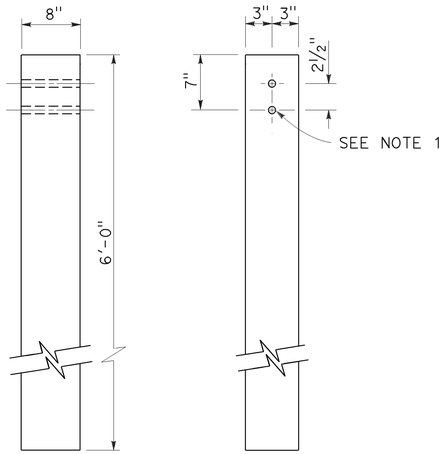

SIDE FRONT

6" x 8" WOOD POST
See Note 3

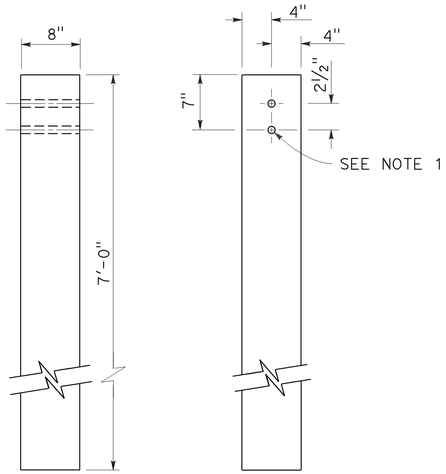

SIDE FRONT

8" x 8" WOOD POST
See Note 4

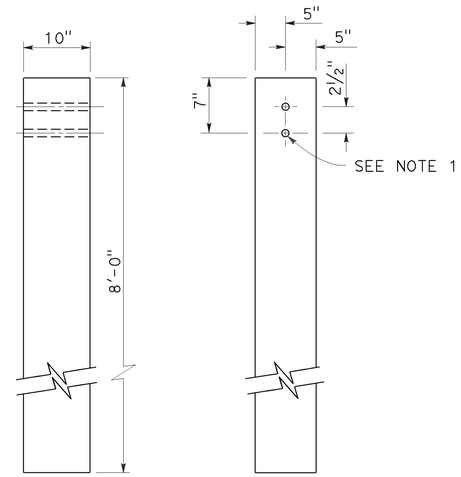

SIDE FRONT

10" x 10" WOOD POST
See Note 5

NOTES:

1. All holes in wood posts and blocks shall be 3/4" Dia ± 1/16".
2. Dimensions shown for wood post are nominal.
3. This post and block combination used for standard line post sections of MGS.
4. This post and 8" x 12" block combination used for line post sections of MGS on narrow roadways.
5. This post and 8" x 12" block combination is typically used where strengthened line post sections of MGS are warranted to shield fixed objects.
6. See Revised Standard Plan RSP A77L3 for use of 6" x 8" and 8" x 8" wood blocks.

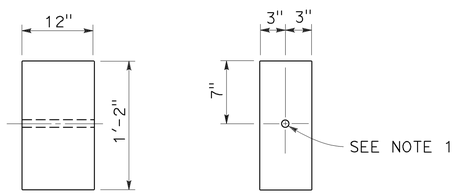

SIDE FRONT

6" x 12" WOOD BLOCK
See Note 3

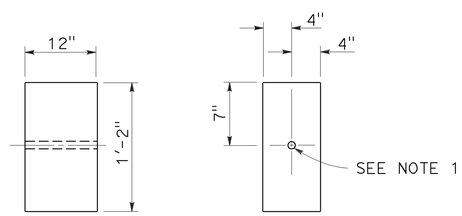

SIDE FRONT

8" x 12" WOOD BLOCK

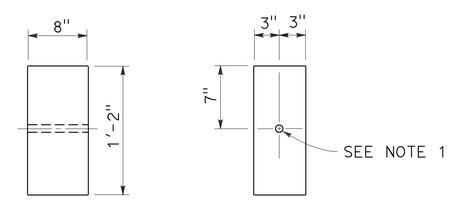

SIDE FRONT

6" x 8" WOOD BLOCK
Only for use with metal beam guard rail see Note 6

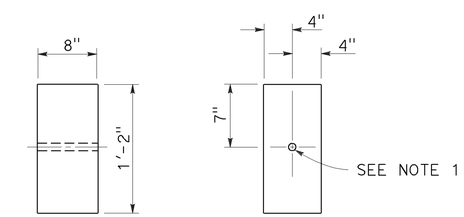

SIDE FRONT

8" x 8" WOOD BLOCK
Only for use with metal beam guard rail see Note 6

STATE OF CALIFORNIA
DEPARTMENT OF TRANSPORTATION

MIDWEST GUARDRAIL SYSTEM WOOD POST AND WOOD BLOCK DETAILS

NO SCALE

RSP A77N1 DATED JULY 19, 2013 SUPPLEMENTS THE STANDARD PLANS BOOK DATED 2010.

REVISED STANDARD PLAN RSP A77N1

2010 REVISED STANDARD PLAN RSP A77N1

7-3-13

Dist	COUNTY	ROUTE	POST MILES TOTAL PROJECT	SHEET No.	TOTAL SHEETS
03	But	70	24.0/24.5	76	123

Randell D. Hiatt
REGISTERED CIVIL ENGINEER

November 15, 2013
PLANS APPROVAL DATE

REGISTERED PROFESSIONAL ENGINEER
Randell D. Hiatt
No. C50200
Exp. 6-30-15
CIVIL
STATE OF CALIFORNIA

THE STATE OF CALIFORNIA OR ITS OFFICERS OR AGENTS SHALL NOT BE RESPONSIBLE FOR THE ACCURACY OR COMPLETENESS OF SCANNED COPIES OF THIS PLAN SHEET.

TO ACCOMPANY PLANS DATED 8-11-14

2010 REVISED STANDARD PLAN RSP A77N3

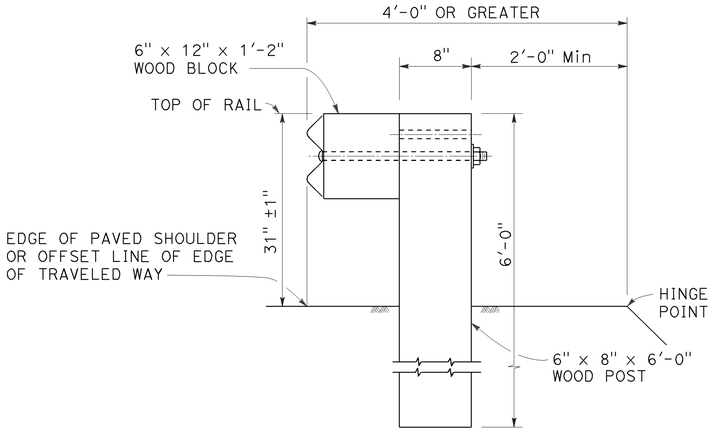

DETAIL A

TYPICAL ROADWAY INSTALLATION

See Note 1

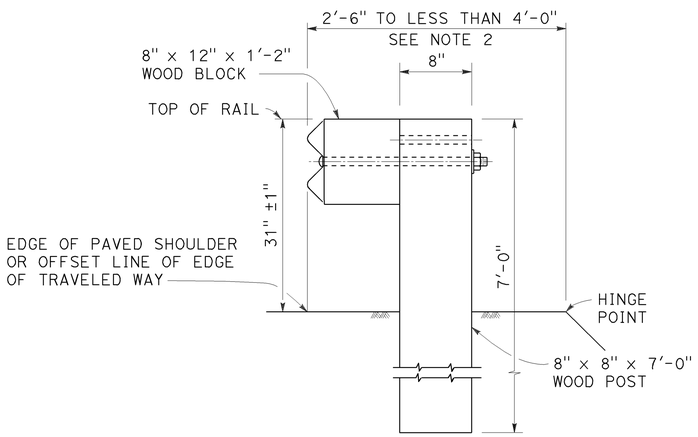

DETAIL B

NARROW ROADWAY INSTALLATION

See Note 1

POST EMBEDMENT

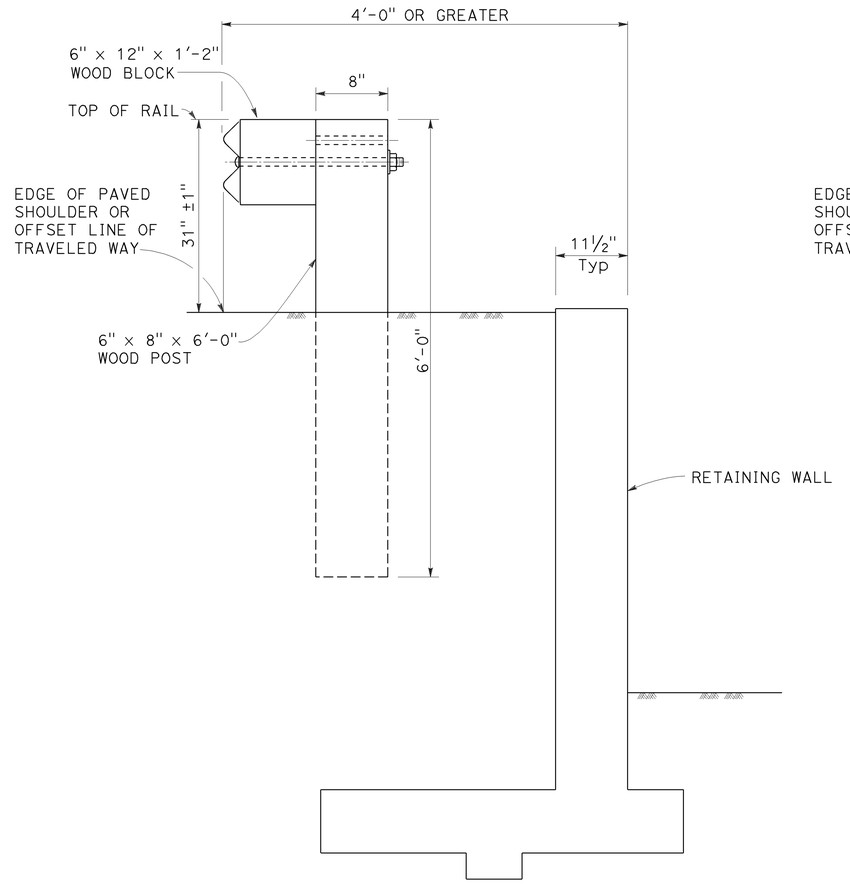

DETAIL C

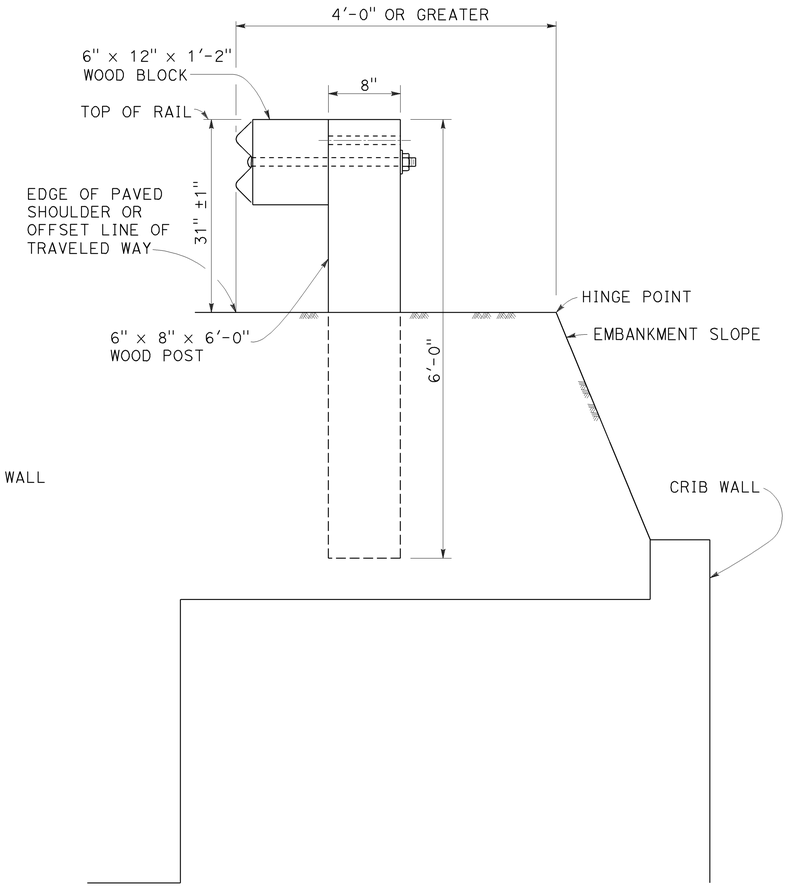

DETAIL D

INSTALLATION AT EARTH RETAINING WALLS

NOTES:

1. These installation details also applicable to steel line post installations. For Detail A, C, and D, where steel line post installations are constructed, W6 x 8.5 or W6 x 9 steel post, 6'-0" in length, with 6" x 12" x 1'-2" notched wood blocks or notched recycled plastic blocks are to be used in place of the size of wood post and wood block shown. For Detail B, where steel line post installations are constructed, W6 x 15 steel post, 8'-0" in length, with 8" x 12" x 1'-2" notched wood blocks or notched recycled plastic blocks are to be used in place of the size of wood post and wood block shown. For additional installation details, see Revised Standard Plan RSP A77L1 and RSP A77L2.
2. Where the distance between the face of the rail and the hinge point is less than 2'-6", see the Project Plans for special details.
3. For dike positioning with MGS installations, see Revised Standard Plan RSP A77N4.

STATE OF CALIFORNIA
DEPARTMENT OF TRANSPORTATION

MIDWEST GUARDRAIL SYSTEM TYPICAL LINE POST EMBEDMENT AND HINGE POINT OFFSET DETAILS

NO SCALE

RSP A77N3 DATED NOVEMBER 15, 2013 SUPERSEDES RSP A77N3
DATED JULY 19, 2013 THAT SUPPLEMENTS THE STANDARD PLANS BOOK DATED 2010.

REVISED STANDARD PLAN RSP A77N3

10-29-13

Dist	COUNTY	ROUTE	POST MILES TOTAL PROJECT	SHEET No.	TOTAL SHEETS
03	But	70	24.0/24.5	77	123

Randell D. Hiatt
REGISTERED CIVIL ENGINEER

July 19, 2013
PLANS APPROVAL DATE

REGISTERED PROFESSIONAL ENGINEER
Randell D. Hiatt
No. C50200
Exp. 6-30-15
CIVIL
STATE OF CALIFORNIA

THE STATE OF CALIFORNIA OR ITS OFFICERS OR AGENTS SHALL NOT BE RESPONSIBLE FOR THE ACCURACY OR COMPLETENESS OF SCANNED COPIES OF THIS PLAN SHEET.

TO ACCOMPANY PLANS DATED 8-11-14

NOTES:

1. When necessary to place dike more than 7" in front of face of MGS, only Type C dike may be used. For dike details, see Revised Standard Plan RSP A87B.
2. For standard railing post embedment, see Revised Standard Plan RSP A77N3.
3. MGS delineation to be used where shown on the Project Plans.
4. When dike or curb is placed under MGS, the maximum height of the dike or curb shall be 6". Mountable dike should not be used. For dike and curb details, see Revised Standard Plans RSP A87A and RSP A87B.
5. For details of typical distance between the face of rail and hinge point, see Revised Standard Plan RSP A77N3.
6. For steel line posts, use 1/4 - 20 self-tapping screws in 0.22" diameter holes or 1/4" bolts in 9/32" diameter holes.

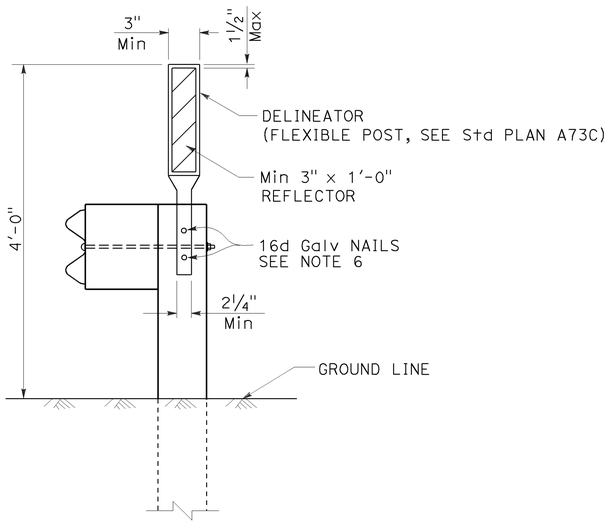

MGS DELINEATION

See Note 3

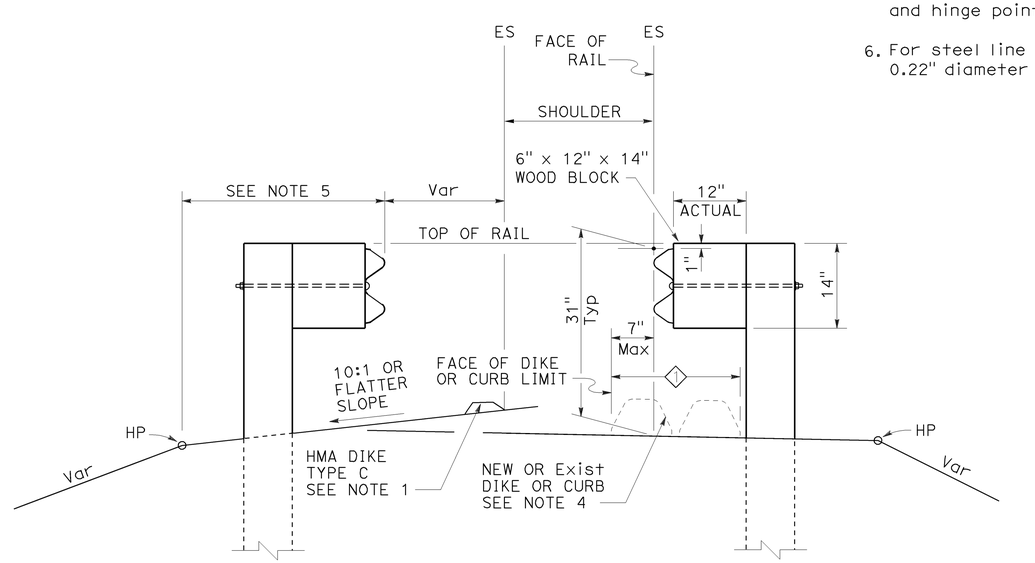

DIKE POSITIONING

See Note 1

1 PERMISSIBLE DIKE OR CURB PLACEMENT AREA

STATE OF CALIFORNIA
DEPARTMENT OF TRANSPORTATION

MIDWEST GUARDRAIL SYSTEM TYPICAL RAILING DELINEATION AND DIKE POSITIONING DETAILS

NO SCALE

RSP A77N4 DATED JULY 19, 2013 SUPPLEMENTS THE STANDARD PLANS BOOK DATED 2010.

REVISED STANDARD PLAN RSP A77N4

2010 REVISED STANDARD PLAN RSP A77N4

7-10-13

Dist	COUNTY	ROUTE	POST MILES TOTAL PROJECT	SHEET No.	TOTAL SHEETS
03	But	70	24.0/24.5	78	123

Randell D. Hiatt
REGISTERED CIVIL ENGINEER

July 19, 2013
PLANS APPROVAL DATE

REGISTERED PROFESSIONAL ENGINEER
Randell D. Hiatt
No. C50200
Exp. 6-30-15
CIVIL
STATE OF CALIFORNIA

THE STATE OF CALIFORNIA OR ITS OFFICERS OR AGENTS SHALL NOT BE RESPONSIBLE FOR THE ACCURACY OR COMPLETENESS OF SCANNED COPIES OF THIS PLAN SHEET.

TO ACCOMPANY PLANS DATED 8-11-14

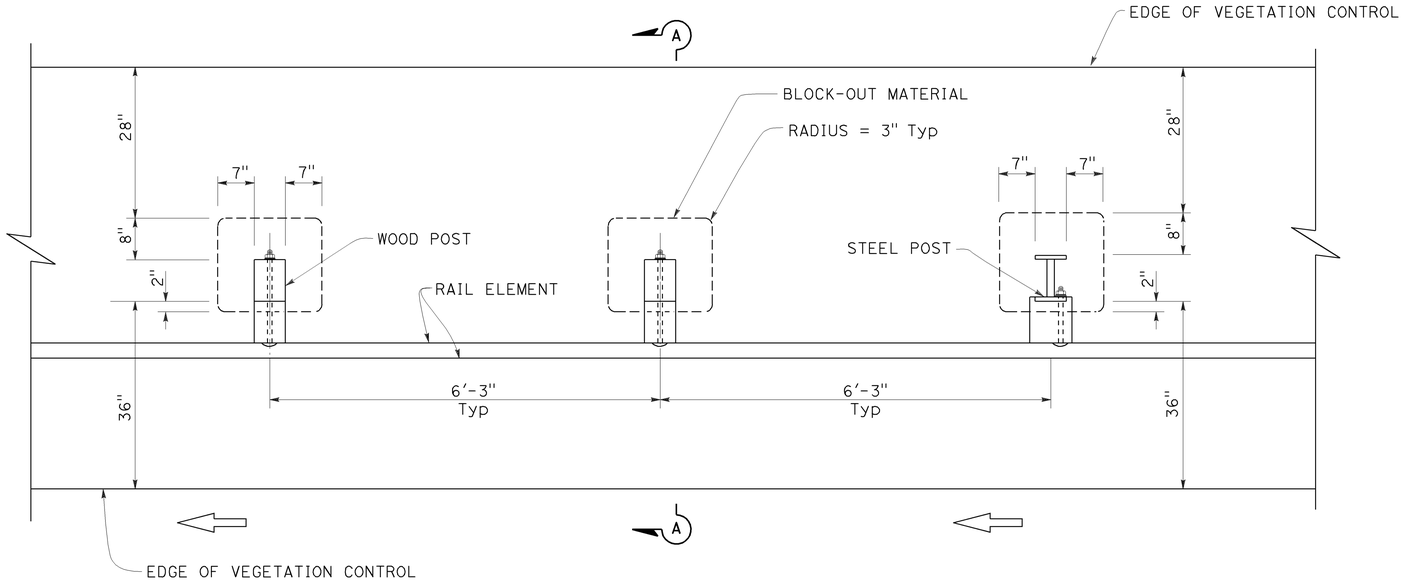

PLAN

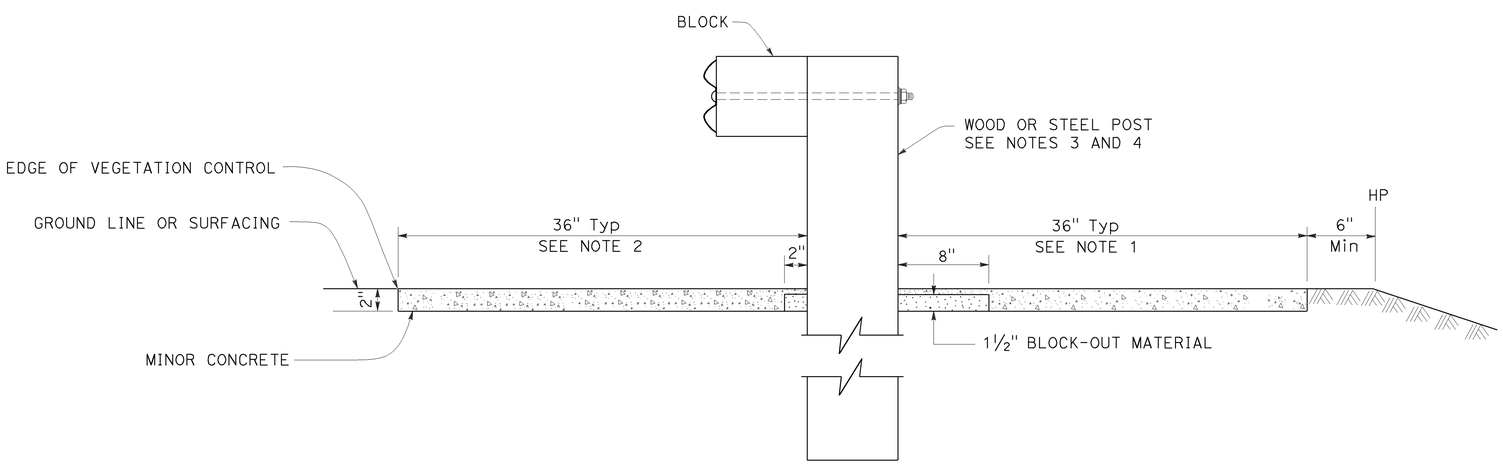

SECTION A-A

NOTES:

1. Where the distance between back of post and hinge point is less than 42", construct vegetation control to 6" from hinge point while maintaining the 8" block-out at back of post. If the 8" block-out at back of post can not be maintained, construct vegetation control flush with the back edge of post.
2. Where dike is constructed under railing, construct vegetation control to back edge of dike. Where paved shoulder is constructed within 36" in front of the post, construct vegetation control to the edge of paved shoulder.
3. For wood post sizes, see Revised Standard Plan RSP A77N1.
4. For steel post sizes, see Revised Standard Plan RSP A77N2.
5. For details not shown, see Revised Standard Plans RSP A77L1 and RSP A77L2.

STATE OF CALIFORNIA
DEPARTMENT OF TRANSPORTATION

MIDWEST GUARDRAIL SYSTEM TYPICAL VEGETATION CONTROL STANDARD RAILING SECTION

NO SCALE

RSP A77N5 DATED JULY 19, 2013 SUPPLEMENTS THE STANDARD PLANS BOOK DATED 2010.

REVISED STANDARD PLAN RSP A77N5

2010 REVISED STANDARD PLAN RSP A77N5

7-3-13

Dist	COUNTY	ROUTE	POST MILES TOTAL PROJECT	SHEET No.	TOTAL SHEETS
03	But	70	24.0/24.5	79	123

Randell D. Hiatt
REGISTERED CIVIL ENGINEER

July 19, 2013
PLANS APPROVAL DATE

REGISTERED PROFESSIONAL ENGINEER
Randell D. Hiatt
No. C50200
Exp. 6-30-15
CIVIL
STATE OF CALIFORNIA

THE STATE OF CALIFORNIA OR ITS OFFICERS OR AGENTS SHALL NOT BE RESPONSIBLE FOR THE ACCURACY OR COMPLETENESS OF SCANNED COPIES OF THIS PLAN SHEET.

TO ACCOMPANY PLANS DATED 8-11-14

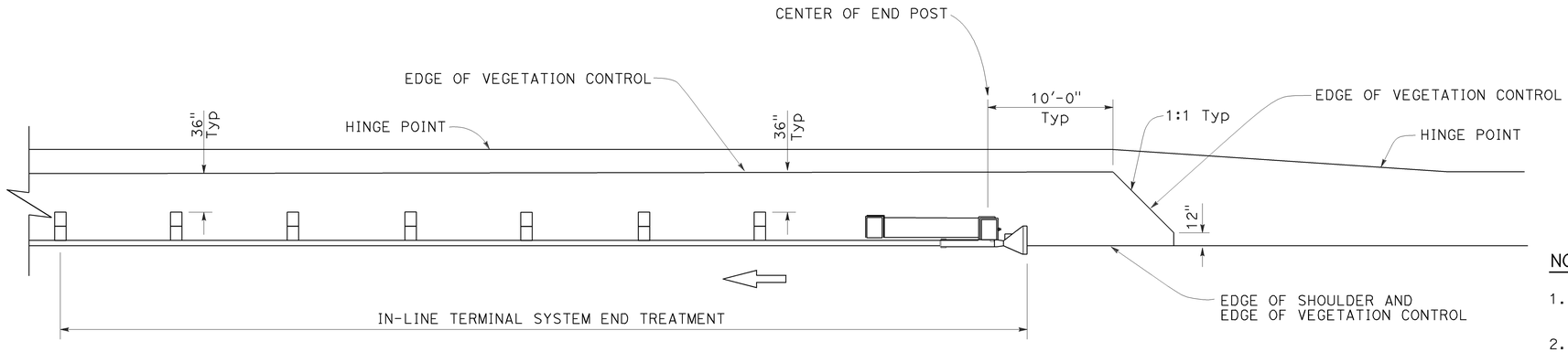

PLAN

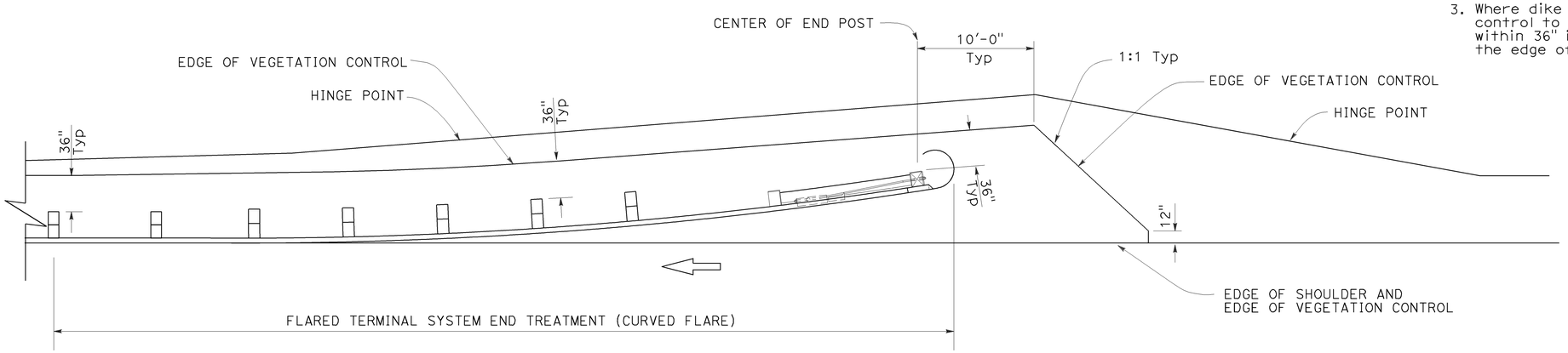

PLAN

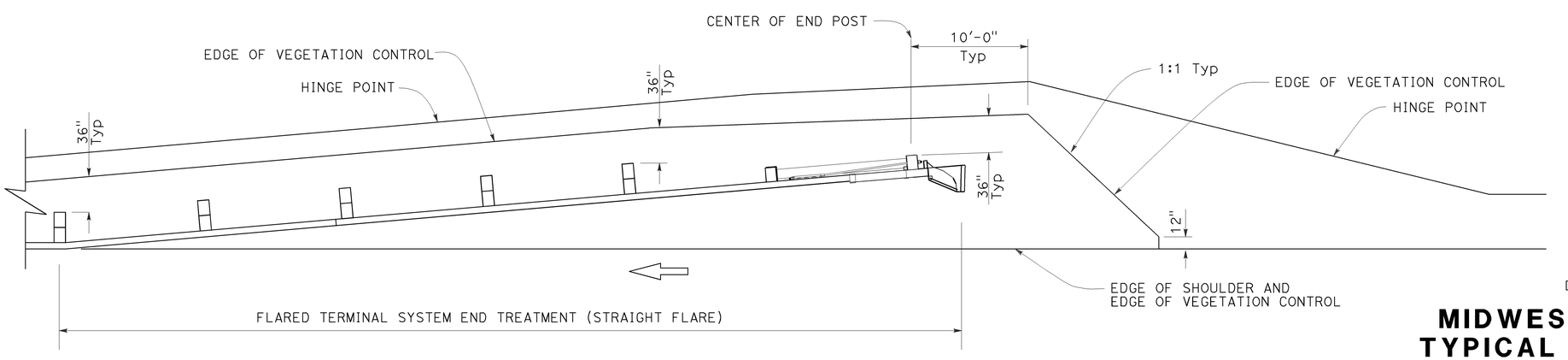

PLAN

NOTES:

1. See Revised Standard Plan RSP A77N5 for additional vegetation control details.
2. Where the distance between back of post and hinge point is less than 42", construct vegetation control to 6" from hinge point while maintaining the 8" block-out at back of post. If the 8" block-out at back of post can not be maintained, construct vegetation control flush with the back edge of post.
3. Where dike is constructed under railing, construct vegetation control to back edge of dike. Where paved shoulder is constructed within 36" in front of the post, construct vegetation control to the edge of paved shoulder.

STATE OF CALIFORNIA
DEPARTMENT OF TRANSPORTATION

MIDWEST GUARDRAIL SYSTEM TYPICAL VEGETATION CONTROL FOR TERMINAL SYSTEM END TREATMENTS

NO SCALE

RSP A77N6 DATED JULY 19, 2013 SUPPLEMENTS THE STANDARD PLANS BOOK DATED 2010.

REVISED STANDARD PLAN RSP A77N6

2010 REVISED STANDARD PLAN RSP A77N6

6-12-13

Dist	COUNTY	ROUTE	POST MILES TOTAL PROJECT	SHEET No.	TOTAL SHEETS
03	But	70	24.0/24.5	80	123

Randell D. Hiatt
REGISTERED CIVIL ENGINEER

July 19, 2013
PLANS APPROVAL DATE

REGISTERED PROFESSIONAL ENGINEER
Randell D. Hiatt
No. C50200
Exp. 6-30-15
CIVIL
STATE OF CALIFORNIA

THE STATE OF CALIFORNIA OR ITS OFFICERS OR AGENTS SHALL NOT BE RESPONSIBLE FOR THE ACCURACY OR COMPLETENESS OF SCANNED COPIES OF THIS PLAN SHEET.

TO ACCOMPANY PLANS DATED 8-11-14

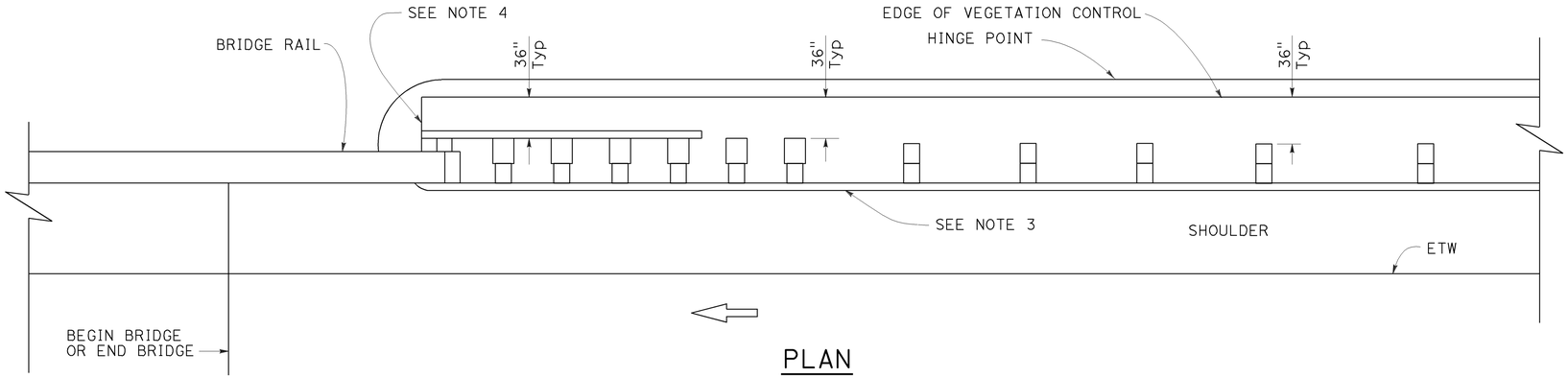

PLAN

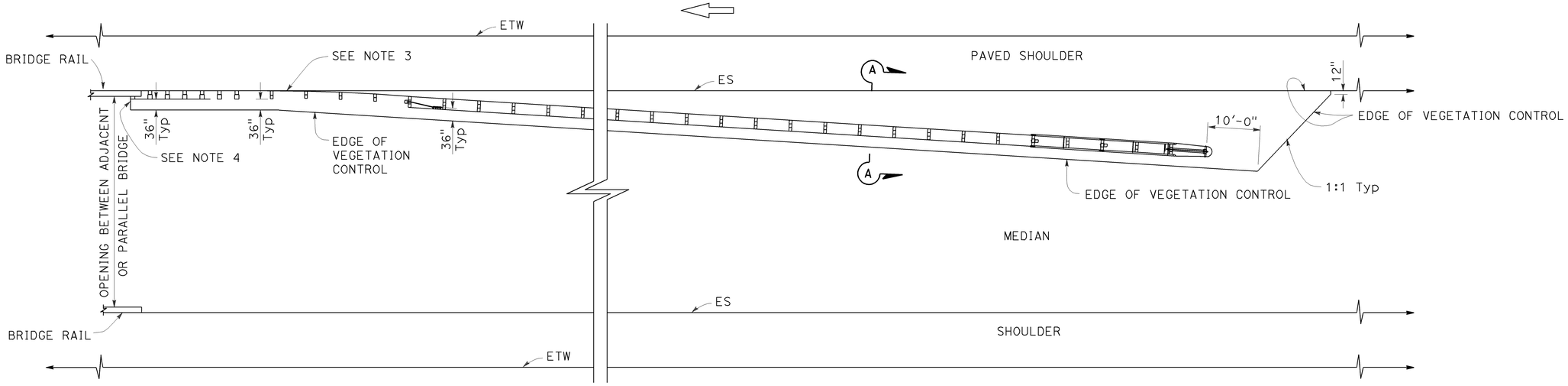

PLAN

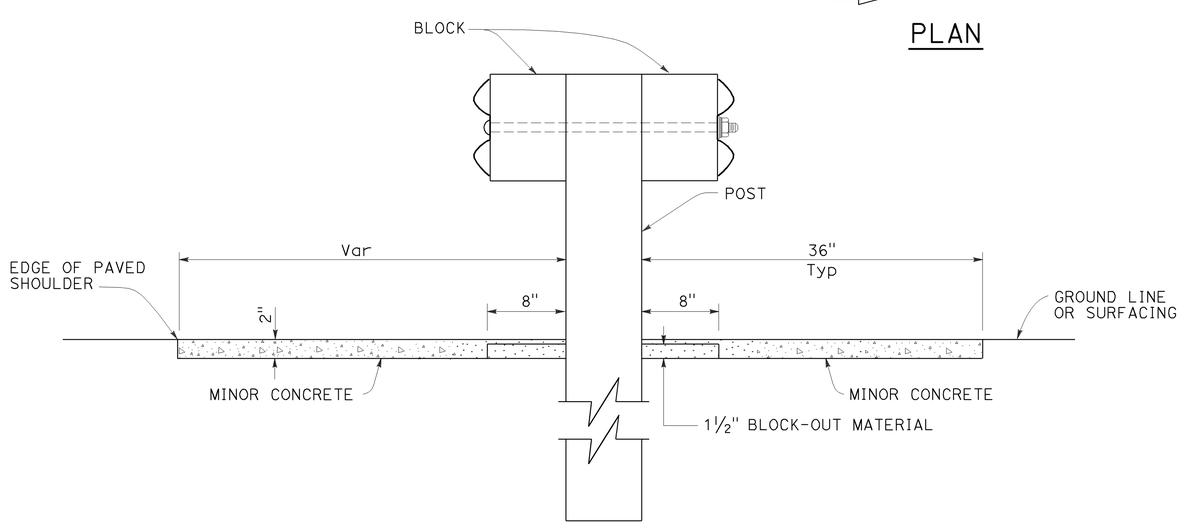

SECTION A-A

NOTES:

1. See Revised Standard Plan RSP A77N5 for additional vegetation control details.
2. Where the distance between back of post and hinge point is less than 42", construct vegetation control to 6" from hinge point while maintaining the 8" block-out at back of post. If the 8" block-out at back of post can not be maintained, construct vegetation control flush with the back edge of post.
3. Where dike is constructed under railing, construct vegetation control to back edge of dike. Where paved shoulder is constructed within 36" in front of the post, construct vegetation control to the edge of paved shoulder.
4. End vegetation control at end of backside rail element.

STATE OF CALIFORNIA
DEPARTMENT OF TRANSPORTATION

MIDWEST GUARDRAIL SYSTEM TYPICAL VEGETATION CONTROL AT STRUCTURE APPROACH

NO SCALE

RSP A77N7 DATED JULY 19, 2013 SUPPLEMENTS THE STANDARD PLANS BOOK DATED 2010.

REVISED STANDARD PLAN RSP A77N7

2010 REVISED STANDARD PLAN RSP A77N7

6-12-13

Dist	COUNTY	ROUTE	POST MILES TOTAL PROJECT	SHEET No.	TOTAL SHEETS
03	But	70	24.0/24.5	81	123

Randell D. Hiatt
REGISTERED CIVIL ENGINEER

November 15, 2013
PLANS APPROVAL DATE

REGISTERED PROFESSIONAL ENGINEER
Randell D. Hiatt
No. C50200
Exp. 6-30-15
CIVIL
STATE OF CALIFORNIA

THE STATE OF CALIFORNIA OR ITS OFFICERS OR AGENTS SHALL NOT BE RESPONSIBLE FOR THE ACCURACY OR COMPLETENESS OF SCANNED COPIES OF THIS PLAN SHEET.

TO ACCOMPANY PLANS DATED 8-11-14

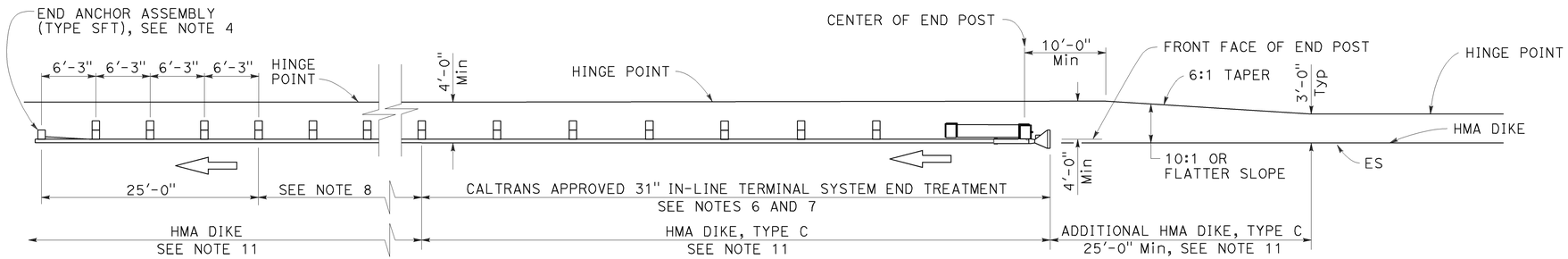

TYPE 11A LAYOUT

(Embankment MGS installation with 31" in-line end treatment at traffic approach end of railing) see Note 5

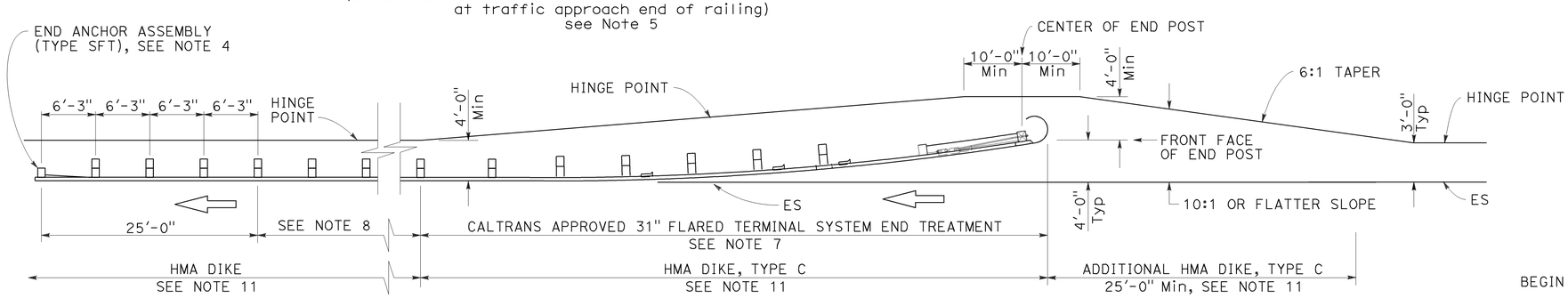

TYPE 11B LAYOUT

(Embankment MGS installation with 31" flared end treatment at traffic approach end of railing) see Note 5

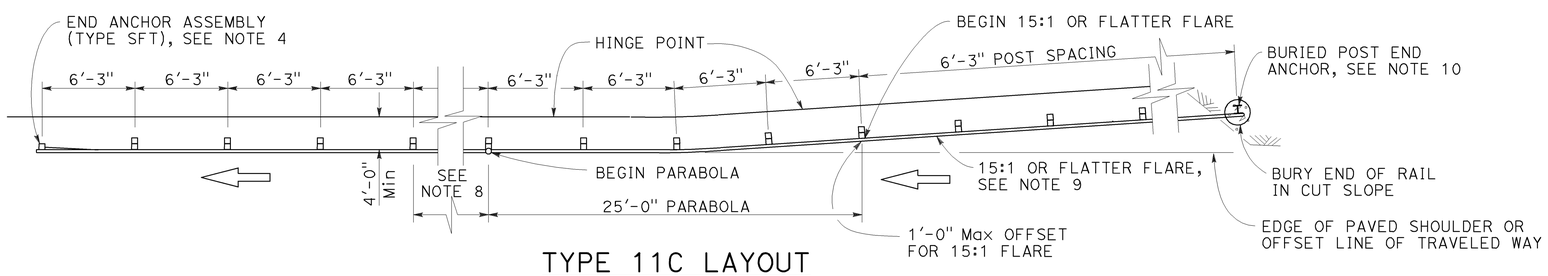

TYPE 11C LAYOUT

(Embankment MGS installation with buried end anchor treatment at traffic approach end of railing) see Notes 5 and 11

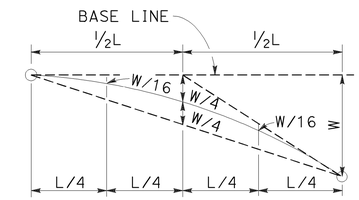

TYPICAL PARABOLIC LAYOUT

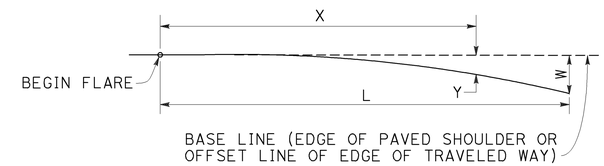

$$Y = \frac{WX^2}{L^2}$$

Y = OFFSET FROM BASE LINE
W = MAXIMUM OFFSET
X = DISTANCE ALONG BASE LINE
L = LENGTH OF FLARE

PARABOLIC FLARE OFFSETS

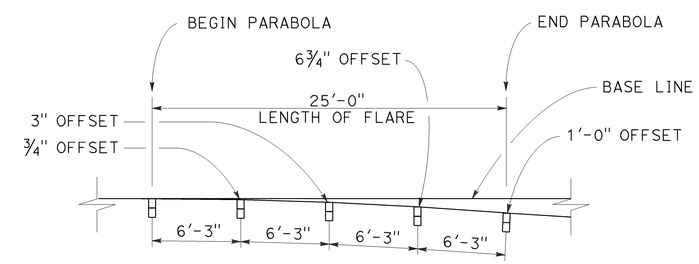

TYPICAL FLARE OFFSETS FOR 1 FOOT Max END OFFSET

NOTES:

1. Line post, blocks and hardware to be used are shown on Revised Standard Plans RSP A77L1, RSP A77L2, RSP A77M1, RSP A77N1 and RSP A77N2.
2. MGS post spacing to be 6'-3" center to center, except as otherwise noted.
3. Except as noted, line posts are 6" x 8" x 6'-0" wood with 6" x 12" x 1'-2" wood blocks. W6 x 8.5 or W6 x 9 steel posts, 6'-0" in length, with 6" x 12" x 1'-2" notched wood blocks or recycled plastic blocks may be used for 6" x 8" x 6'-0" wood post with 6" x 12" x 1'-2" wood blocks where applicable and when specified.
4. For End Anchor Assembly (Type SFT) details, see Revised Standard Plan RSP A77S1.
5. Layout Types 11A, 11B or 11C are typically used where MGS is recommended to shield embankment slopes and a crashworthy end treatment is required for only one direction of traffic.
6. 31" in-line terminal system end treatments are used where site conditions will not accommodate a flared end treatment.
7. The type of 31" terminal system end treatment to be used will be shown on the Project Plans.
8. Dependent on site conditions (embankment height and side slope), construction of additional MGS (length equal to multiples of 12'-6" with 6'-3" post spacing) may be advisable.
9. The 15:1 or flatter flare used with buried end anchors is based on the edge of the paved shoulder or offset line of edge of the traveled way. The length of MGS within the 15:1 or flatter flare is based on site conditions and should be a length equal to multiples of 12'-6".
10. For details of the buried post end anchor used with Type 11C Layout, see Revised Standard Plan RSP A77T2.
11. Where placement of dike is required with MGS installations, see Revised Standard Plan RSP A77N4 for dike positioning details.

STATE OF CALIFORNIA
DEPARTMENT OF TRANSPORTATION

MIDWEST GUARDRAIL SYSTEM TYPICAL LAYOUTS FOR EMBANKMENTS

NO SCALE

RSP A77P1 DATED NOVEMBER 15, 2013 SUPERSEDES RSP A77P1 DATED JULY 19, 2013 THAT SUPPLEMENTS THE STANDARD PLANS BOOK DATED 2010.

REVISED STANDARD PLAN RSP A77P1

2010 REVISED STANDARD PLAN RSP A77P1

10-4-13

Dist	COUNTY	ROUTE	POST MILES TOTAL PROJECT	SHEET No.	TOTAL SHEETS
03	But	70	24.0/24.5	82	123

Randell D. Hiatt
REGISTERED CIVIL ENGINEER

July 19, 2013
PLANS APPROVAL DATE

REGISTERED PROFESSIONAL ENGINEER
Randell D. Hiatt
No. C50200
Exp. 6-30-15
CIVIL
STATE OF CALIFORNIA

THE STATE OF CALIFORNIA OR ITS OFFICERS OR AGENTS SHALL NOT BE RESPONSIBLE FOR THE ACCURACY OR COMPLETENESS OF SCANNED COPIES OF THIS PLAN SHEET.

TO ACCOMPANY PLANS DATED 8-11-14

2010 REVISED STANDARD PLAN RSP A77Q1

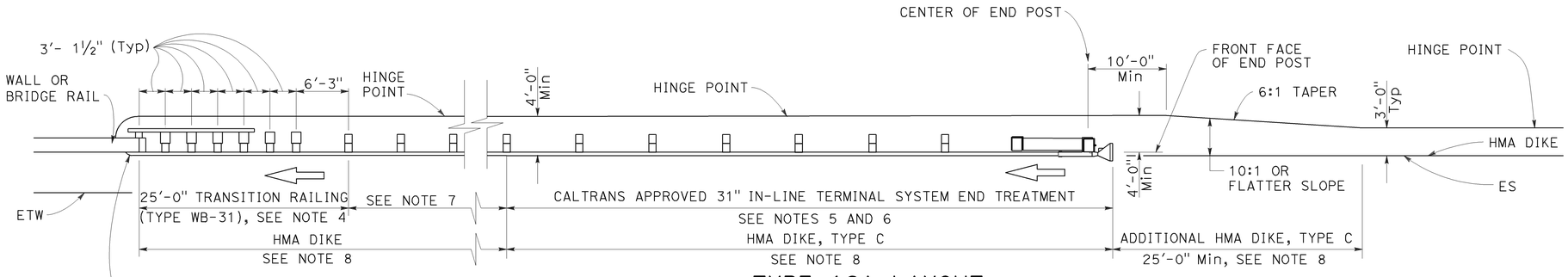

TYPE 12A LAYOUT

(MGS installation at structure approach with
31" In-line end treatment at traffic approach end of railing)
See Notes 9

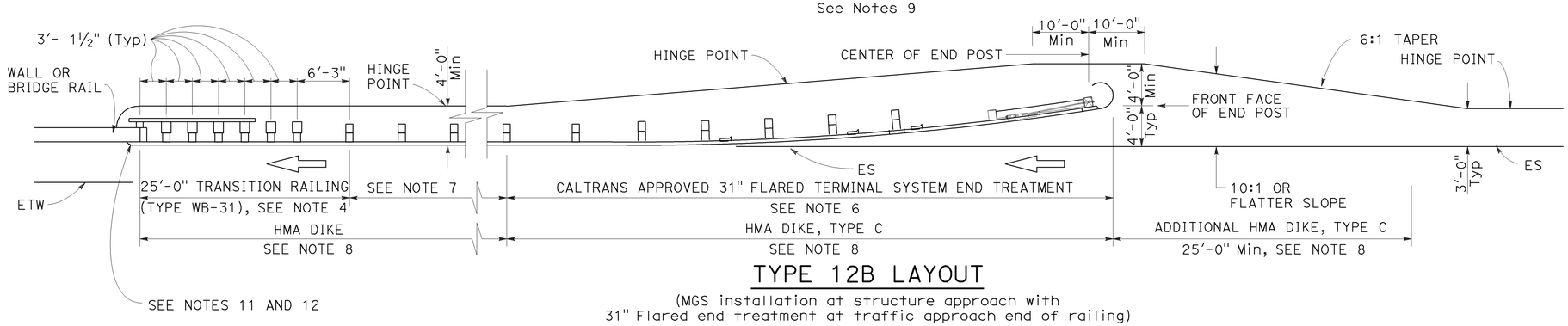

TYPE 12B LAYOUT

(MGS installation at structure approach with
31" Flared end treatment at traffic approach end of railing)
See Notes 9

NOTES:

1. Line post, blocks and hardware to be used are shown on Revised Standard Plans RSP A77L1, RSP A77L2, RSP A77M1, RSP A77N1 and RSP A77N2.
2. MGS post spacing to be 6'-3" center to center, except as otherwise noted.
3. Except as noted, line posts are 6" x 8" x 6'-0" wood with 6" x 12" x 1'-2" wood blocks. W6 x 8.5 or W6 x 9 steel posts, 6'-0" in length, with 6" x 12" x 1'-2" notched wood blocks or plastic blocks may be used for 6" x 8" x 6'-0" wood posts with 6" x 12" x 1'-2" wood blocks where applicable and when specified.
4. For Transition Railing (Type WB-31) details for Types 12A and 12B Layouts, see Revised Standard Plan RSP A77U4.
5. 31" in-line terminal system end treatments are used where site conditions will not accommodate a 31" flared end treatment.
6. The type 31" of terminal system end treatment to be used will be shown on the Project Plans.
7. Dependent on site conditions (embankment height, side slopes, or other fixed objects), it may be advisable to construct additional guard railing (a length equal to multiples of 12'-6" with 6'-3" post spacing) between the transition railing and end treatment. A 12.5 degree angle of departure can be drawn on the Project Plans from the edge of traveled way through the outer most point of the fixed object to determine the additional length of railing needed.
8. Where placement of dike is required with guard railing installations, see Revised Standard Plan RSP A77N4 for dike positioning details.
9. Type 12A or Type 12B Layouts are typically used:
   a. To the right of approaching traffic, at the end of a structure, on two-lane conventional highway where the roadbed width across the structure is less than 40 feet.
   b. To the left of approaching traffic, at the end of a structure, on two-lane conventional highway where the roadbed width across the structure is less than 40 feet.
   c. To the right of approaching traffic at the end of each structure on multilane freeways or expressways with separate adjacent or parallel bridges.
   d. To the right of approaching traffic at the end of the structure on multilane freeways or expressways with decked median on the bridge.
10. See Revised Standard Plan RSP A77Q3 for typical layout used left of approaching traffic at the ends of each structure on multilane freeways or expressways with separate adjacent or parallel bridges.
11. For additional details of typical connections to bridge rail, see Connection Detail AA on Revised Standard Plans RSP A77U1 and RSP A77U2 and Connection Detail FF on Revised Standard Plans RSP A77V1 and RSP A77V2.
12. For additional details of a typical connection to walls or abutments, see Revised Standard Plan RSP A77U3.

STATE OF CALIFORNIA
DEPARTMENT OF TRANSPORTATION

MIDWEST GUARDRAIL SYSTEM TYPICAL LAYOUTS FOR STRUCTURE APPROACH

NO SCALE

RSP A77Q1 DATED JULY 19, 2013 SUPPLEMENTS THE STANDARD PLANS BOOK DATED 2010.

REVISED STANDARD PLAN RSP A77Q1

Dist	COUNTY	ROUTE	POST MILES TOTAL PROJECT	SHEET No.	TOTAL SHEETS
03	But	70	24.0/24.5	83	123

Randell D. Hiatt
REGISTERED CIVIL ENGINEER

November 15, 2013
PLANS APPROVAL DATE

REGISTERED PROFESSIONAL ENGINEER
Randell D. Hiatt
No. C50200
Exp. 6-30-15
CIVIL
STATE OF CALIFORNIA

THE STATE OF CALIFORNIA OR ITS OFFICERS OR AGENTS SHALL NOT BE RESPONSIBLE FOR THE ACCURACY OR COMPLETENESS OF SCANNED COPIES OF THIS PLAN SHEET.

TO ACCOMPANY PLANS DATED 8-11-14

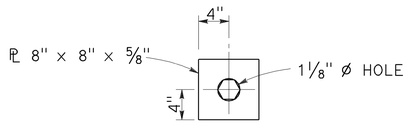

DETAIL "A"
CABLE CONNECTION
END PLATE

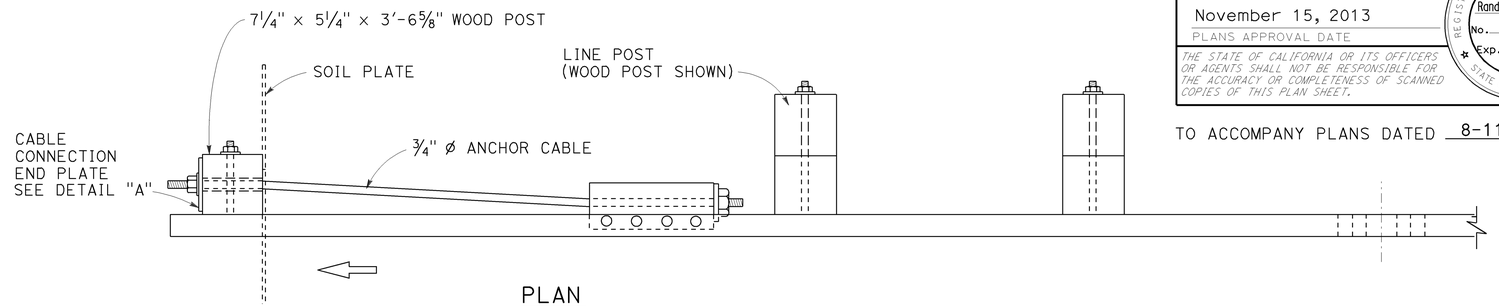

PLAN

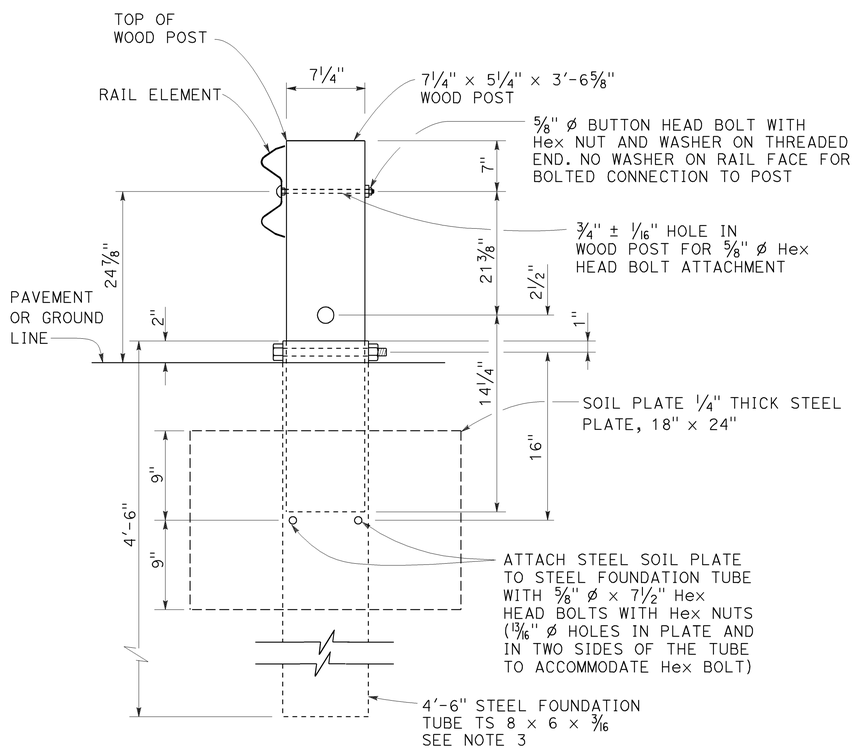

SECTION A-A

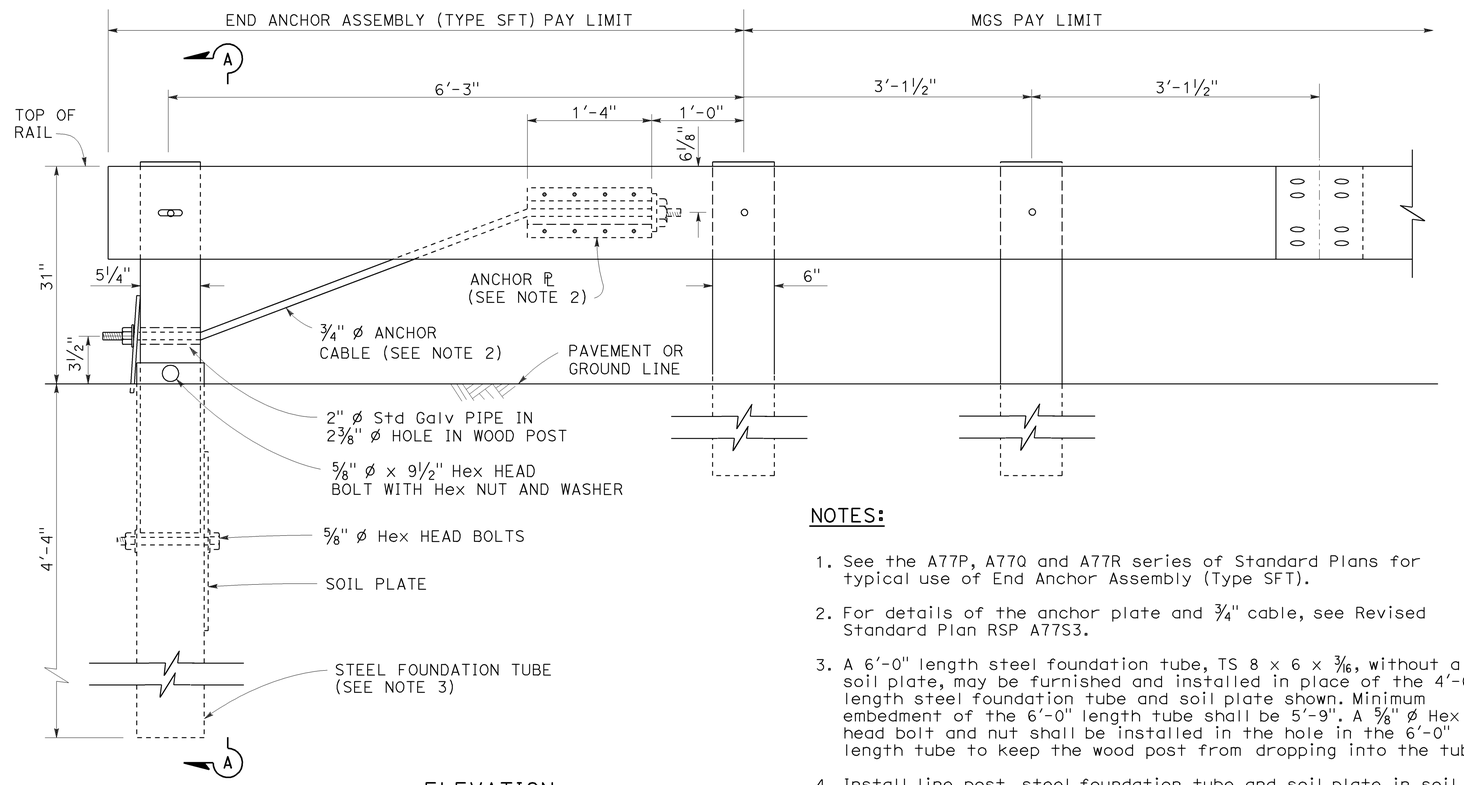

ELEVATION

END ANCHOR
ASSEMBLY (TYPE SFT)
See Note 1

NOTES:

1. See the A77P, A77Q and A77R series of Standard Plans for typical use of End Anchor Assembly (Type SFT).
2. For details of the anchor plate and 3/4" cable, see Revised Standard Plan RSP A77S3.
3. A 6'-0" length steel foundation tube, TS 8 x 6 x 3/16, without a soil plate, may be furnished and installed in place of the 4'-6" length steel foundation tube and soil plate shown. Minimum embedment of the 6'-0" length tube shall be 5'-9". A 5/8" ø Hex head bolt and nut shall be installed in the hole in the 6'-0" length tube to keep the wood post from dropping into the tube.
4. Install line post, steel foundation tube and soil plate in soil.

STATE OF CALIFORNIA
DEPARTMENT OF TRANSPORTATION

MIDWEST GUARDRAIL SYSTEM END ANCHOR ASSEMBLY (TYPE SFT)

NO SCALE

RSP A77S1 DATED NOVEMBER 15, 2013 SUPERSEDES RSP A77S1
DATED JULY 19, 2013 THAT SUPPLEMENTS THE STANDARD PLANS BOOK DATED 2010.

REVISED STANDARD PLAN RSP A77S1

2010 REVISED STANDARD PLAN RSP A77S1

10-4-13

Dist	COUNTY	ROUTE	POST MILES TOTAL PROJECT	SHEET No.	TOTAL SHEETS
03	But	70	24.0/24.5	84	123

Randell D. Hiatt
REGISTERED CIVIL ENGINEER

November 15, 2013
PLANS APPROVAL DATE

REGISTERED PROFESSIONAL ENGINEER
Randell D. Hiatt
No. C50200
Exp. 6-30-15
CIVIL
STATE OF CALIFORNIA

THE STATE OF CALIFORNIA OR ITS OFFICERS OR AGENTS SHALL NOT BE RESPONSIBLE FOR THE ACCURACY OR COMPLETENESS OF SCANNED COPIES OF THIS PLAN SHEET.

TO ACCOMPANY PLANS DATED 8-11-14

2010 REVISED STANDARD PLAN RSP A77S3

NOTE:

See Revised Standard Plans RSP A77S1, RSP A77S2 and RSP A77T1 for typical use of anchor cable and anchor plate.

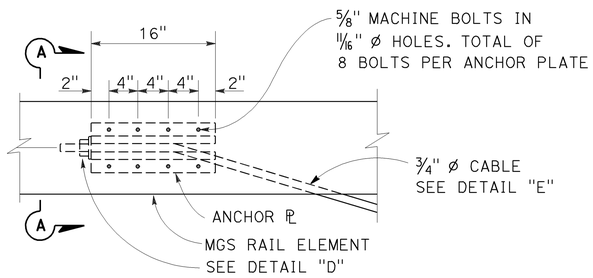

ANCHOR PLATE DETAIL
(MGS shown, TBB similar)

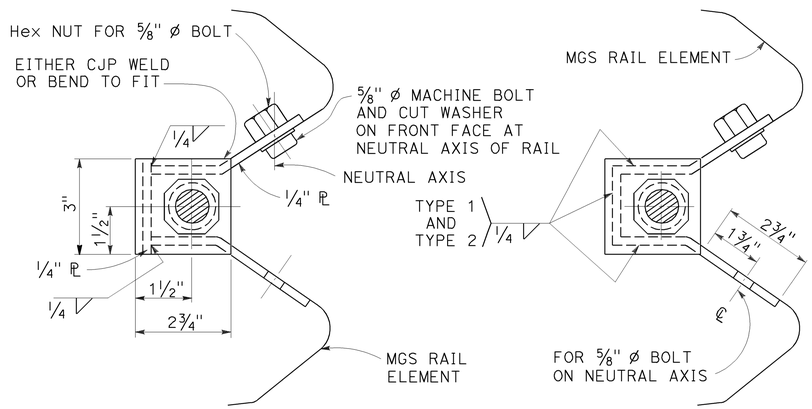

NOTE:
Dimensioning applies to both types.

SECTION A-A
(ALTERNATIVE TYPE 1)

SECTION A-A
(ALTERNATIVE TYPE 2)

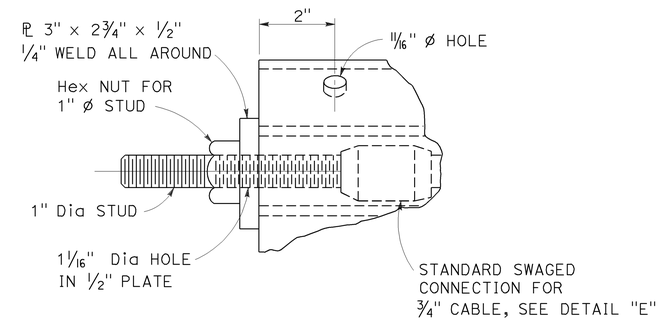

DETAIL "D"

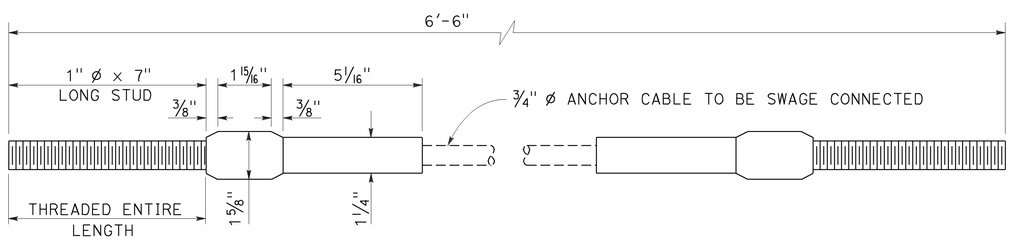

ANCHOR CABLE WITH
SWAGED FITTING AND STUD
DETAIL "E"

STATE OF CALIFORNIA
DEPARTMENT OF TRANSPORTATION

METAL RAILING ANCHOR CABLE AND ANCHOR PLATE DETAILS

NO SCALE

RSP A77S3 DATED NOVEMBER 15, 2013 SUPERSEDES RSP A77S3
DATED JULY 19, 2013 THAT SUPPLEMENTS THE STANDARD PLANS BOOK DATED 2010.

REVISED STANDARD PLAN RSP A77S3

10-4-13

Dist	COUNTY	ROUTE	POST MILES TOTAL PROJECT	SHEET No.	TOTAL SHEETS
03	But	70	24.0/24.5	85	123

Randell D. Hiatt
REGISTERED CIVIL ENGINEER

July 19, 2013
PLANS APPROVAL DATE

REGISTERED PROFESSIONAL ENGINEER
Randell D. Hiatt
No. C50200
Exp. 6-30-15
CIVIL
STATE OF CALIFORNIA

THE STATE OF CALIFORNIA OR ITS OFFICERS OR AGENTS SHALL NOT BE RESPONSIBLE FOR THE ACCURACY OR COMPLETENESS OF SCANNED COPIES OF THIS PLAN SHEET.

TO ACCOMPANY PLANS DATED 8-11-14

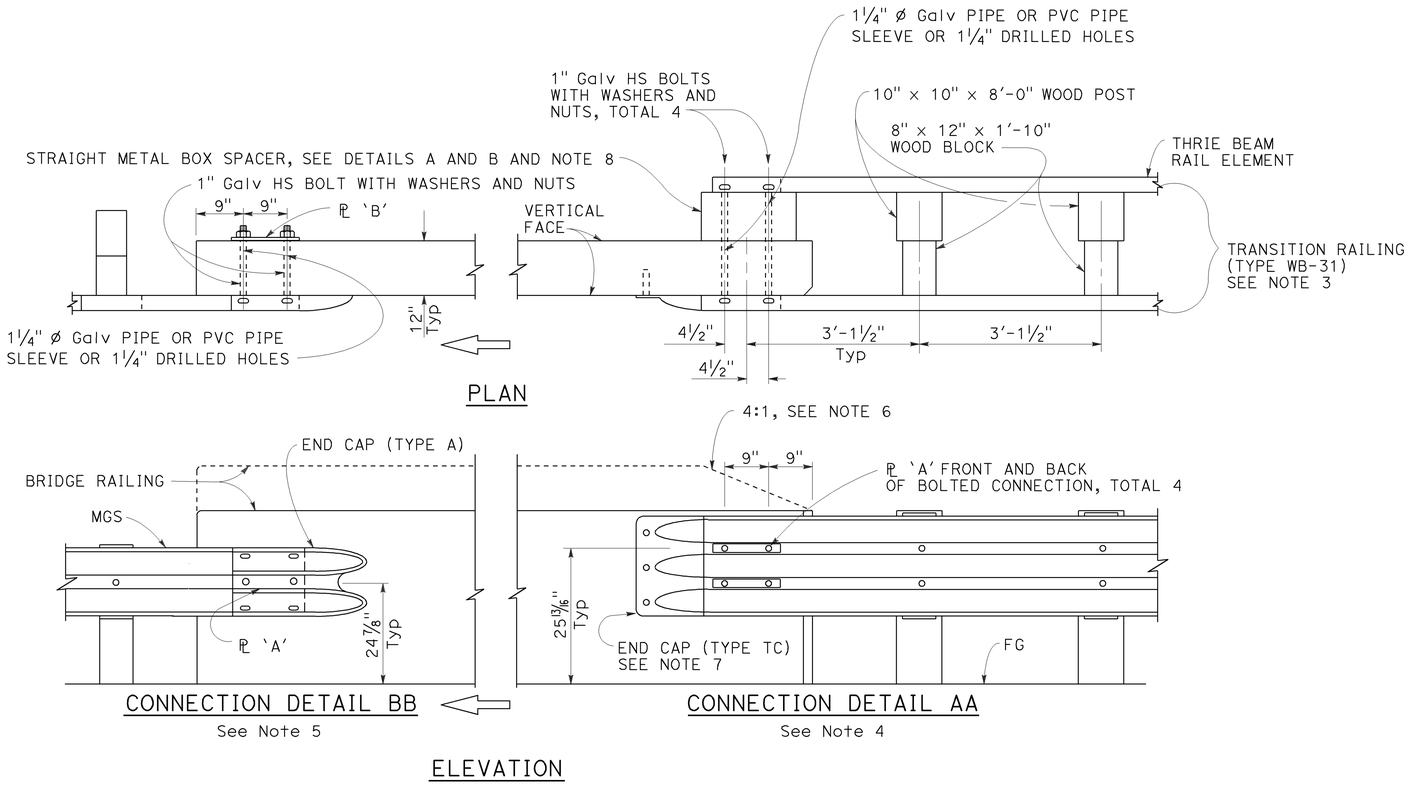

MIDWEST GUARDRAIL SYSTEM CONNECTION TO BRIDGE RAILING WITHOUT SIDEWALK

NOTES:

1. See Revised Standard Plan RSP A77U2 for additional connection details to bridges without sidewalks.
2. Additional details of posts, blocks and hardware are shown on Revised Standard Plans RSP A77M1, RSP A77N1 and RSP A77N2.
3. For additional details of Transition Railing (Type WB-31), see Revised Standard Plan RSP A77U4. Transition Railing (Type WB-31) transitions the 12 gauge MGS railing section to a heavier gage nested thrie beam railing section which is connected to the concrete bridge railing.
4. For typical use of Connection Detail AA, see Layout Types 12A and 12B on Revised Standard Plan RSP A77Q1, Layout Types 12C and 12D on Revised Standard Plan RSP A77Q2, and Layout Type 12E on Revised Standard Plan RSP A77Q3.
5. For typical use of Connection Detail BB, see Layout Type 12D (structure departure railing connection) on Revised Standard Plan RSP A77Q2 and Layout Type 12DD on Revised Standard Plan RSP A77Q5.
6. Where the height of the bridge railing exceeds the height of the thrie beam railing by more than 1" at Connection Detail AA, taper the top of the end of the bridge railing at 4:1 to match the top elevation of the thrie beam rail.
7. For details of End Cap (Type TC), see Revised Standard Plan RSP A77U4.
8. See Revised Standard Plan RSP A77U4 for additional details regarding depth dimension for straight metal box spacer.

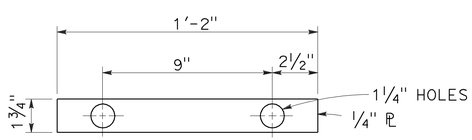

PLATE 'A'

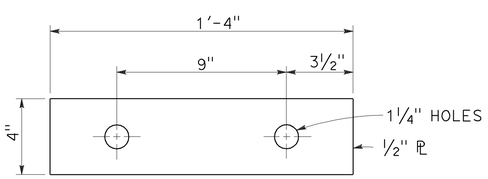

PLATE 'B'
(For backside of connection BB)

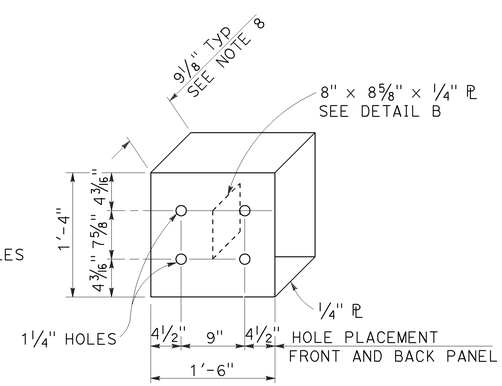

DETAIL A

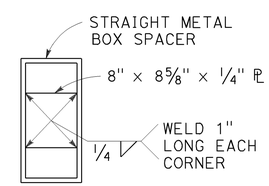

DETAIL B

STRAIGHT METAL BOX SPACER

STATE OF CALIFORNIA
DEPARTMENT OF TRANSPORTATION

MIDWEST GUARDRAIL SYSTEM CONNECTIONS TO BRIDGE RAILINGS WITHOUT SIDEWALKS DETAILS No. 1

NO SCALE

RSP A77U1 DATED JULY 19, 2013 SUPPLEMENTS THE STANDARD PLANS BOOK DATED 2010.

REVISED STANDARD PLAN RSP A77U1

2010 REVISED STANDARD PLAN RSP A77U1

7-8-13

Dist	COUNTY	ROUTE	POST MILES TOTAL PROJECT	SHEET No.	TOTAL SHEETS
03	But	70	24.0/24.5	86	123

Randell D. Hiatt
REGISTERED CIVIL ENGINEER

November 15, 2013
PLANS APPROVAL DATE

REGISTERED PROFESSIONAL ENGINEER
Randell D. Hiatt
No. C50200
Exp. 6-30-15
CIVIL
STATE OF CALIFORNIA

THE STATE OF CALIFORNIA OR ITS OFFICERS OR AGENTS SHALL NOT BE RESPONSIBLE FOR THE ACCURACY OR COMPLETENESS OF SCANNED COPIES OF THIS PLAN SHEET.

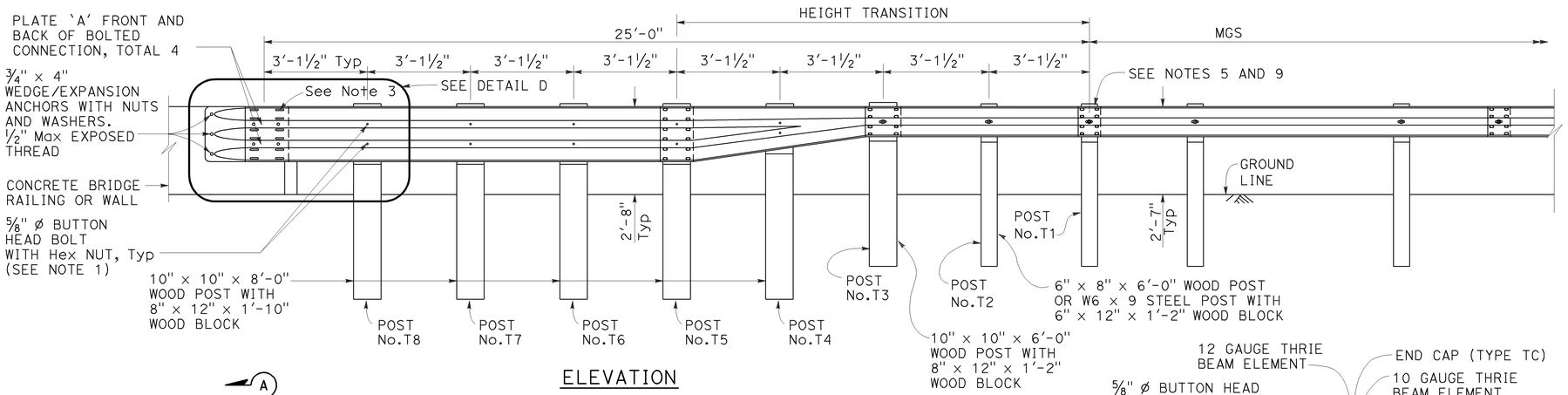

ELEVATION

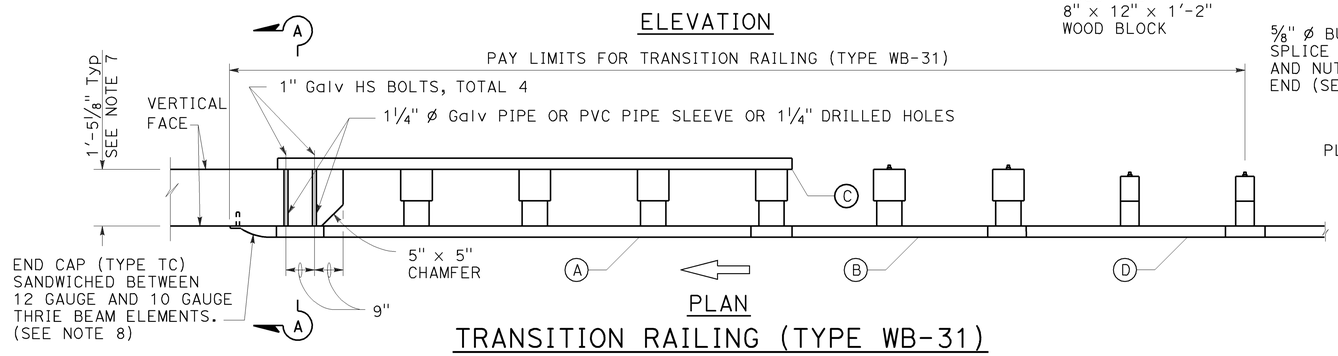

PLAN

TRANSITION RAILING (TYPE WB-31)

(No Blockout Attachment)

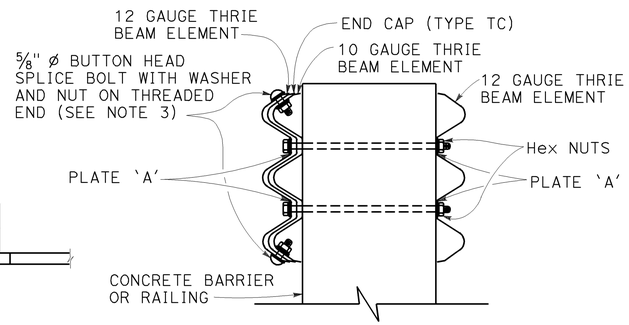

SECTION A-A

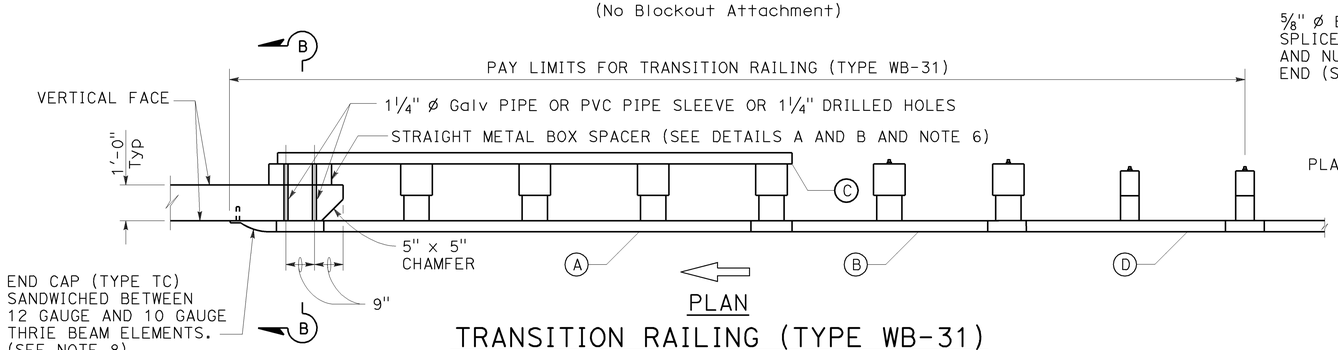

PLAN

TRANSITION RAILING (TYPE WB-31)

(Blockout Attachment)

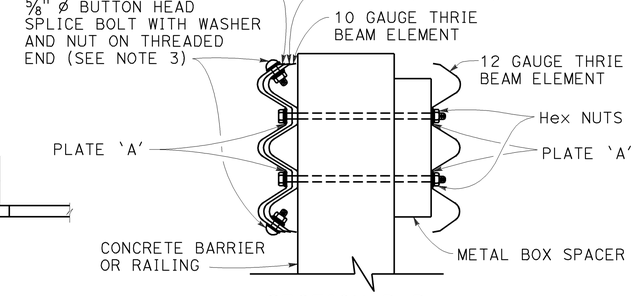

SECTION B-B

NOTES:

TO ACCOMPANY PLANS DATED 8-11-14

1. Use 5/8" ø Button head bolts and hex nuts for connections to posts. No washer on rail face for bolted connections to post.
2. The nested rail elements, end cap, and 'W' beam to thrie beam element may be spliced together prior to bolting the elements to the wood post and concrete barrier or railing.
3. Exterior splice bolt holes for rail element splices at Post No. T5 and the connection to the concrete barrier or railing shall be the standard 29/32" x 1 1/8" slot size. Interior splice bolt holes at these locations may be increased up to 1 1/4" ø. Only the top 4 and the bottom 4 splice bolts with washers and nuts are required for rail splices at Post No. T5 and the connection to the concrete barrier or railing.
4. The top elevation of Posts No. T2 through No. T7 shall not project more than 1" above the top elevation of the rail element.
5. Typically, the railing connected to Transition Railing (Type WB-31) will be either standard railing section of MGS with height transition ratio of 150:1 or a Caltrans approved 31" end treatment attached to Post No. T1.
6. The depth of the metal box spacer varies from the 9 1/8" to 1 1/2" and is dependent on the width of the concrete railing or wall. The combined dimension for the depth of the metal box spacer plus the width of railing or wall is typically 21 1/8". Where the space between the backside of the concrete railing or wall and the rear thrie beam element is less than 1 1/2", metal plates similar to Plate 'A' are to be used as spacers.
7. Where the width of the concrete railing or wall is greater than 17 1/8", wood blocks are to be used to fill the space created between the backside of Posts No. T5 through No. T8 and the rear thrie beam element. These wood blocks shall be 8" in width and 1'-2" in length. The dimension between the front thrie beam element and the rear thrie beam element is to match the width of the concrete railing or wall.
8. End cap may be installed over 12 gauge and 10 gauge thrie beam elements where transition railing is installed on the departure end of bridge railing.
9. Conform standard railing section height to 31" at Post No. T1 using height transition ratio of 150:1.

LEGEND:

(A) NESTED THRIE BEAM ELEMENTS (ONE 12 GAUGE ELEMENT NESTED OVER ONE 10 GAUGE ELEMENT).

(B) ONE ASYMMETRICAL 10 GAUGE "W" BEAM TO THRIE BEAM ELEMENT.

(C) ONE 12 GAUGE THRIE BEAM ELEMENT.

(D) ONE 10 GAUGE "W" BEAM RAIL ELEMENT (7'-3 1/2" LENGTH)

10 GAUGE = 0.138" THICK
12 GAUGE = 0.108" THICK

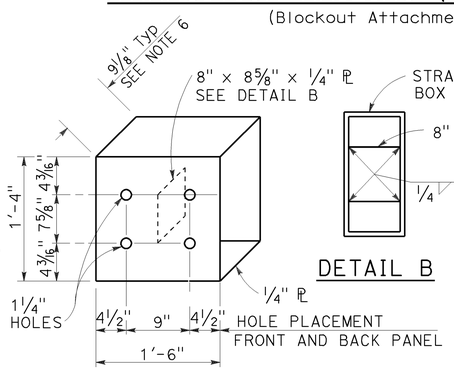

DETAIL A

STRAIGHT METAL BOX SPACER

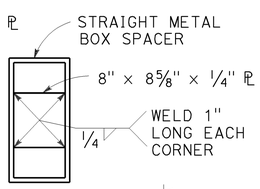

DETAIL B

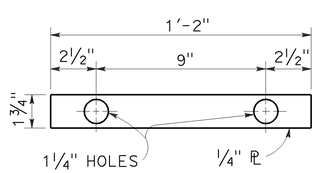

DETAIL C

PLATE 'A'

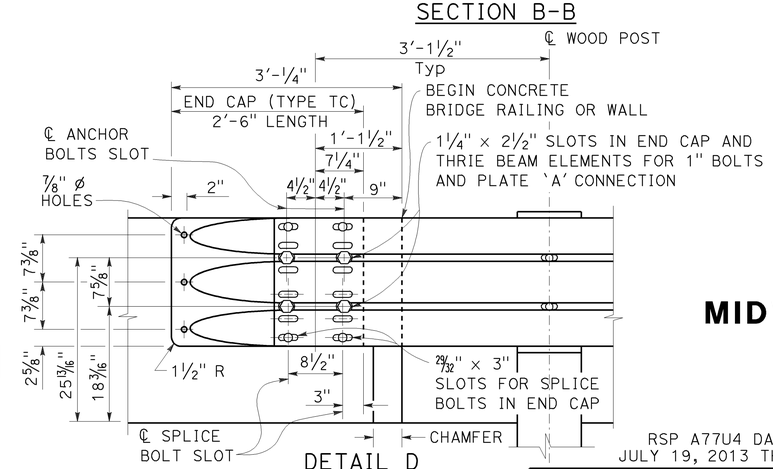

DETAIL D

STATE OF CALIFORNIA
DEPARTMENT OF TRANSPORTATION

MIDWEST GUARDRAIL SYSTEM TRANSITION RAILING (TYPE WB-31)

NO SCALE

RSP A77U4 DATED NOVEMBER 15, 2013 SUPERSEDES RSP A77U4 DATED JULY 19, 2013 THAT SUPPLEMENTS THE STANDARD PLANS BOOK DATED 2010.

REVISED STANDARD PLAN RSP A77U4

2010 REVISED STANDARD PLAN RSP A77U4

10-4-13

Dist	COUNTY	ROUTE	POST MILES TOTAL PROJECT	SHEET No.	TOTAL SHEETS
03	But	70	24.0/24.5	87	123

Raymond Don Tsztoo
REGISTERED CIVIL ENGINEER

October 19, 2012
PLANS APPROVAL DATE

REGISTERED PROFESSIONAL ENGINEER
Raymond Don Tsztoo
No. C37332
Exp. 6-30-14
CIVIL
STATE OF CALIFORNIA

THE STATE OF CALIFORNIA OR ITS OFFICERS OR AGENTS SHALL NOT BE RESPONSIBLE FOR THE ACCURACY OR COMPLETENESS OF SCANNED COPIES OF THIS PLAN SHEET.

TO ACCOMPANY PLANS DATED 8-11-14

2010 REVISED STANDARD PLAN RSP A86D

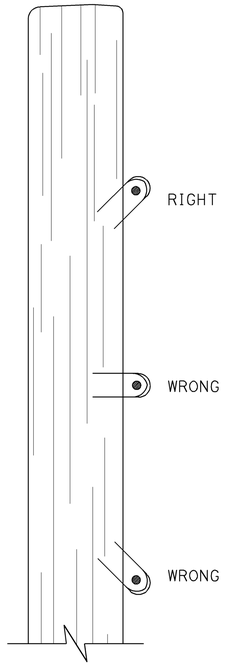

DRIVE STAPLES AT ANGLE

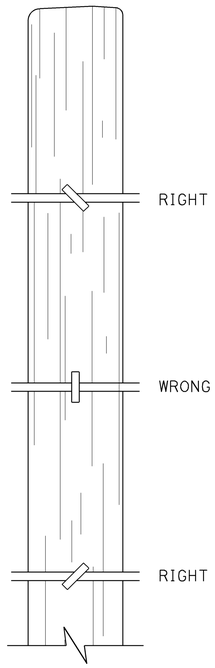

DO NOT DRIVE STAPLES PARALLEL TO SIDE OF POST

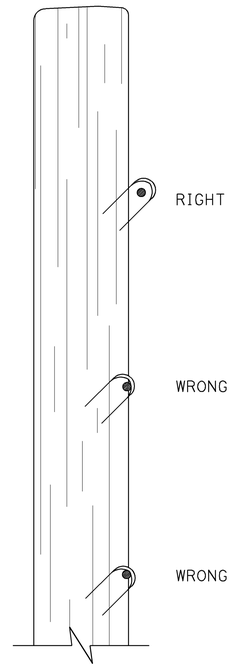

LEAVE WIRE LOOSE IN STAPLE

LINE POST STAPLING DETAILS

(Apply to rectangular/square and round posts)
Do not staple vertical wire in wire mesh.

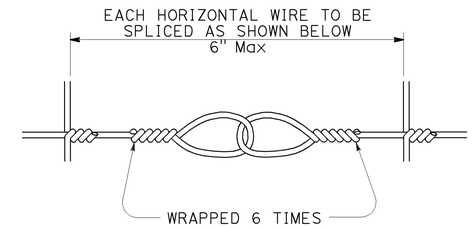

SPLICE DETAIL FOR BARBED WIRE/WIRE MESH FENCE

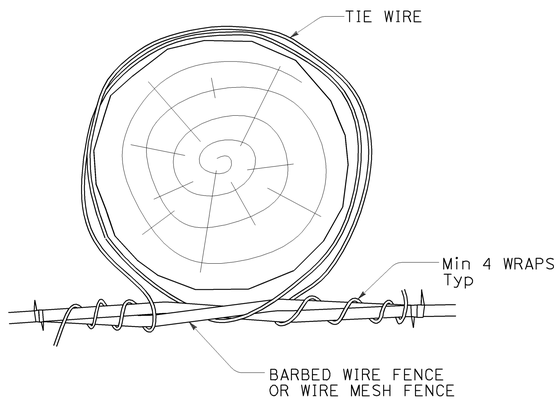

OPTION A

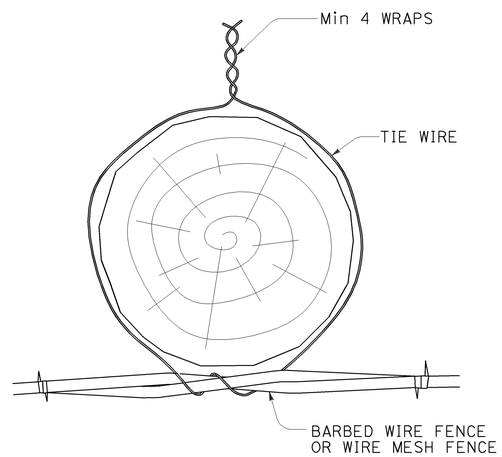

OPTION B

LINE POST WIRE TIE OPTION DETAILS

(Option details also apply to rectangular/square posts)

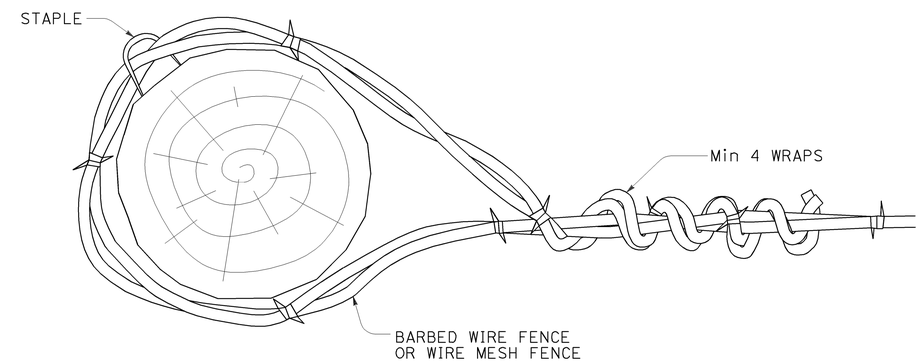

END, LATCH, PULL, AND CORNER POST DETAIL

(Also applies to rectangular/square posts)

STATE OF CALIFORNIA
DEPARTMENT OF TRANSPORTATION

BARBED WIRE AND WIRE MESH FENCE - MISCELLANEOUS DETAILS

NO SCALE

RSP A86D DATED OCTOBER 19, 2012 SUPPLEMENTS THE STANDARD PLANS BOOK DATED 2010.

REVISED STANDARD PLAN RSP A86D

10-9-12

Dist	COUNTY	ROUTE	POST MILES TOTAL PROJECT	SHEET No.	TOTAL SHEETS
03	But	70	24.0/24.5	88	123

REGISTERED CIVIL ENGINEER

July 19, 2013
PLANS APPROVAL DATE

REGISTERED PROFESSIONAL ENGINEER
Michael Janzen
No. 44788
Exp. 03-31-14
CIVIL
STATE OF CALIFORNIA

THE STATE OF CALIFORNIA OR ITS OFFICERS OR AGENTS SHALL NOT BE RESPONSIBLE FOR THE ACCURACY OR COMPLETENESS OF SCANNED COPIES OF THIS PLAN SHEET.

TO ACCOMPANY PLANS DATED 8-11-14

2010 REVISED STANDARD PLAN RSP A87B

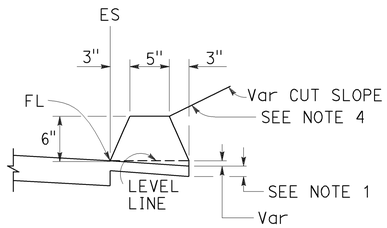

TYPE A
See Note 3

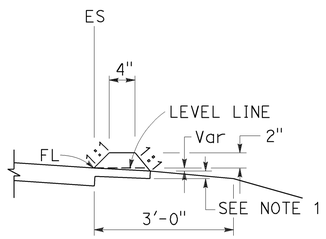

TYPE C

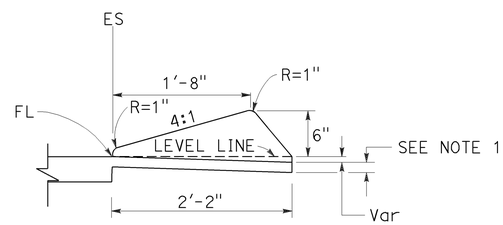

TYPE D

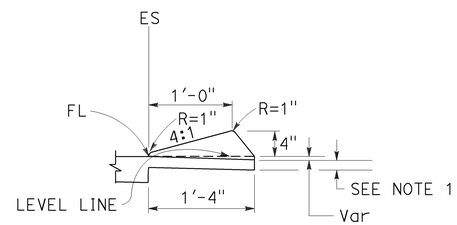

TYPE E

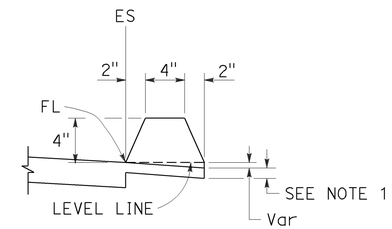

TYPE F
See Note 5

DIKES

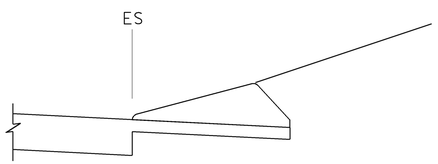

CASE C-1
Cut Slope

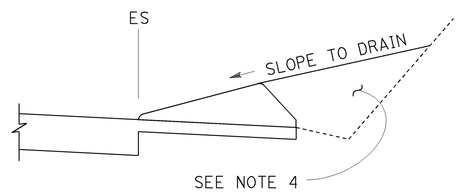

CASE C-2
Cut Slope

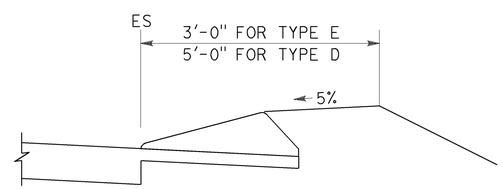

CASE F

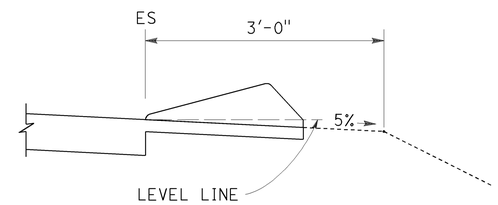

CASE R
See Note 2

TYPE D AND E BACKFILL DETAILS

NOTES:

1. For HMA shoulders only, extend top layer of HMA placed on the shoulder under dike with no joint at the ES. For projects with OGFC shoulders, do not extend OGFC under dike. See project plans for modified dike detail.
2. Case R applies to retrofit only projects where restrictive conditions do not provide enough width for Case F backfill.
3. Type A dike only to be used where restrictive slope conditions do not provide enough width to use Type D or Type E dike.
4. Fill and compact with excavated material to top of dike.
5. Use Type F dike, where dike is required with guard railing installations. See Revised Standard Plan RSP A77N4 for dike positioning details.

DIKE QUANTITIES

TYPE	CUBIC YARDS PER LINEAR FOOT
A	0.0135
C	0.0038
D	0.0293
E	0.0130
F	0.0066

Quantities based on 5% cross slope.

STATE OF CALIFORNIA
DEPARTMENT OF TRANSPORTATION

HOT MIX ASPHALT DIKES

NO SCALE

RSP A87B DATED JULY 19, 2013 SUPERSEDES STANDARD PLAN A87B
DATED MAY 20, 2011 - PAGE 120 OF THE STANDARD PLANS BOOK DATED 2010.

REVISED STANDARD PLAN RSP A87B

6-27-13

DIST	COUNTY	ROUTE	POST MILES TOTAL PROJECT	SHEET No.	TOTAL SHEETS
03	But	70	24.0/24.5	89	123

REGISTERED CIVIL ENGINEER

November 15, 2013
PLANS APPROVAL DATE

REGISTERED PROFESSIONAL ENGINEER Cornelis M. Hakim No. C55610 Exp. 12-31-14 CIVIL STATE OF CALIFORNIA

THE STATE OF CALIFORNIA OR ITS OFFICERS OR AGENTS SHALL NOT BE RESPONSIBLE FOR THE ACCURACY OR COMPLETENESS OF SCANNED COPIES OF THIS PLAN SHEET.

TO ACCOMPANY PLANS DATED 8-11-14

2010 REVISED STANDARD PLAN RSP P74

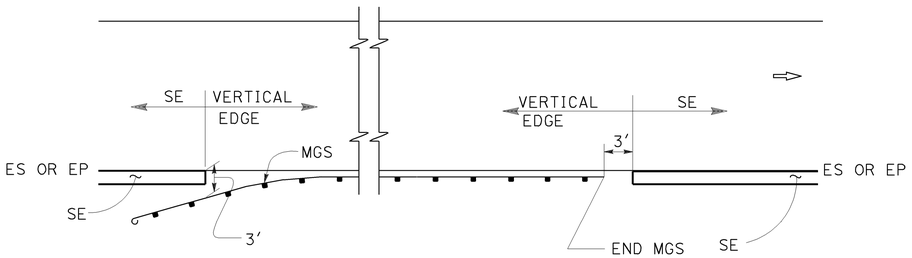

MGS

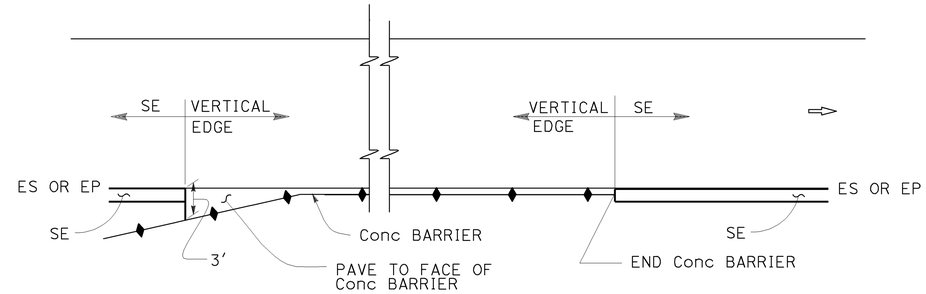

CONCRETE BARRIER

ABBREVIATIONS:

SE SAFETY EDGE

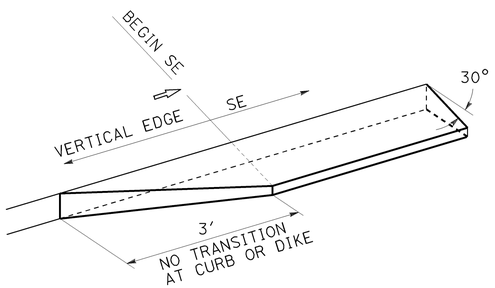

TRANSITION DETAIL FOR CONCRETE ONLY

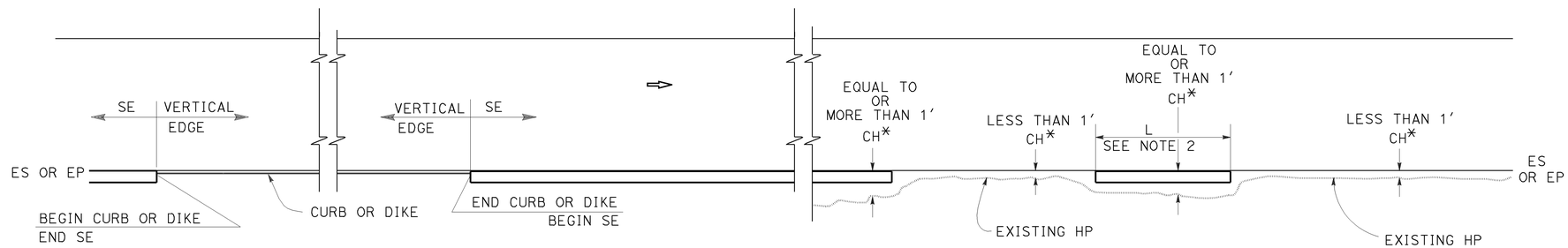

CURB OR DIKE

NARROW SIDE SLOPE

* CH = Distance from ES or EP to existing HP.

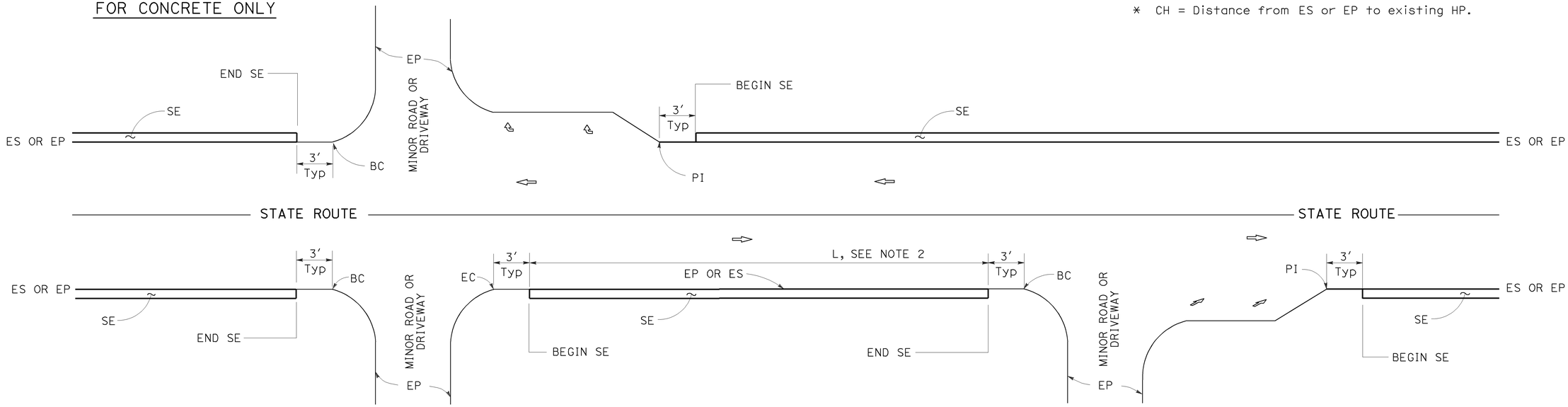

INTERSECTION

MINOR ROADWAY OR DRIVEWAY

DRIVEWAY AND INTERSECTION

STATE OF CALIFORNIA
DEPARTMENT OF TRANSPORTATION

PAVEMENT EDGE TREATMENTS

NO SCALE

RSP P74 DATED NOVEMBER 15, 2013 SUPERSEDES RSP P74 DATED JANUARY 20, 2012 THAT SUPPLEMENTS THE STANDARD PLANS BOOK DATED 2010.

NOTES:

1. For details not shown, see Revised Standard Plans RSP P75 and RSP P76.
2. Safety edge is optional when L is less than 30′.

REVISED STANDARD PLAN RSP P74

10-11-13

DIST	COUNTY	ROUTE	POST MILES TOTAL PROJECT	SHEET No.	TOTAL SHEETS
03	But	70	24.0/24.5	90	123

REGISTERED CIVIL ENGINEER

November 15, 2013
PLANS APPROVAL DATE

REGISTERED PROFESSIONAL ENGINEER Cornelis M. Hakim No. C55610 Exp. 12-31-14 CIVIL STATE OF CALIFORNIA

THE STATE OF CALIFORNIA OR ITS OFFICERS OR AGENTS SHALL NOT BE RESPONSIBLE FOR THE ACCURACY OR COMPLETENESS OF SCANNED COPIES OF THIS PLAN SHEET.

TO ACCOMPANY PLANS DATED 8-11-14

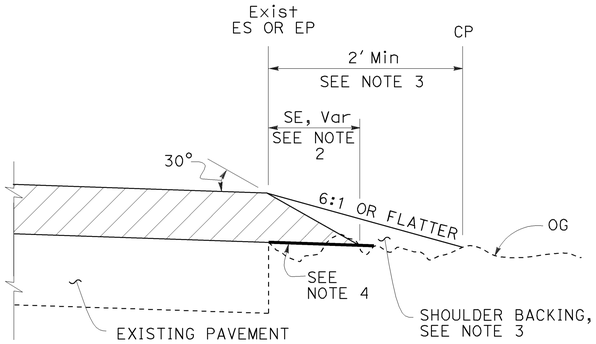

CASE A
Safety Edge

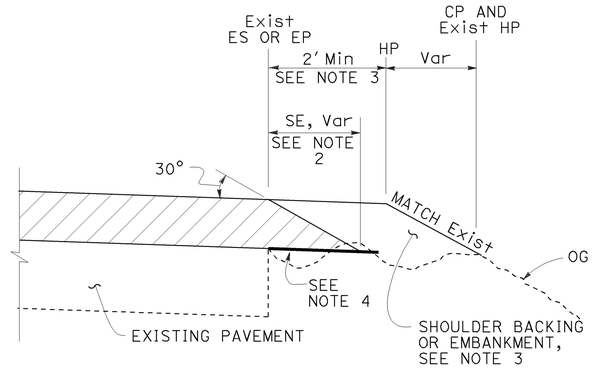

CASE B
Safety Edge

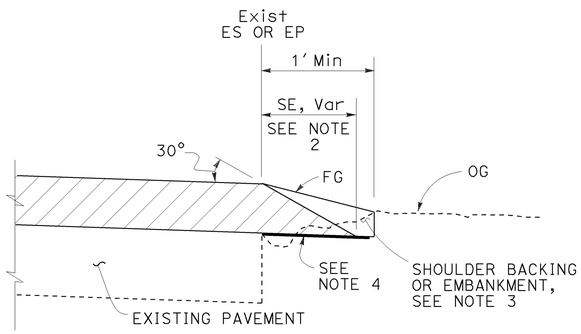

CASE C
Safety Edge

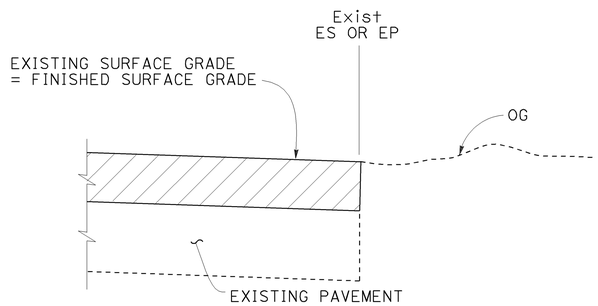

CASE D
Vertical Edge

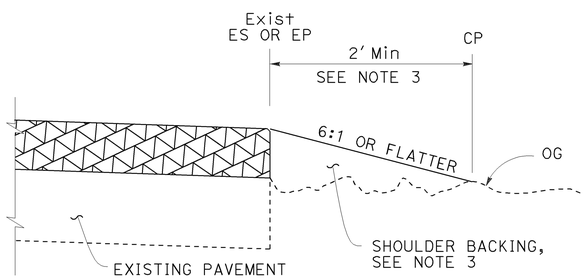

CASE E
Vertical Edge

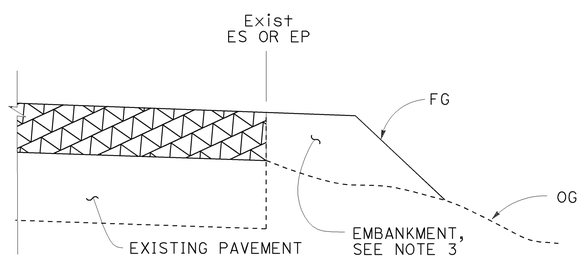

CASE F
Vertical Edge
* See Table A and Revised Std Plan RSP P74

LEGEND:

- HMA OVERLAY
- HMA OR CONCRETE OVERLAY
- CONCRETE OVERLAY

ABBREVIATIONS:

SE SAFETY EDGE
TT TOTAL THICKNESS OF SE

TABLE A
EDGE TREATMENT FOR VARIOUS OVERLAY THICKNESS AND CONDITIONS

	OVERLAY THICKNESS	
FIELD CONDITION	LESS THAN 0.15'	0.15' OR MORE
Exist SLOPE 6:1 OR FLATTER	CASE E	CASE A
Exist SLOPE 3:1 TO 6:1	CASE E	CASE B
Exist SLOPE STEEPER THAN 3:1	CASE F	CASE F
CUT SECTION (REPLACE, COLD PLANE, MILL PAVEMENT)	CASE D	CASE C

ADDITIONAL HMA OR CONCRETE QUANTITIES FOR SE/SIDE/MILE

TYPICAL CROSS SECTION	TT	TOTAL ADDITIONAL MATERIAL FOR SE/SIDE/MILE		
		HMA (TON)	CONCRETE (CY)*	CONCRETE (CY)**
TT	0.15'	NA	NA	NA
	0.20'	13.7	NA	NA
	0.30'	30.9	NA	NA
	0.40'	54.9	NA	NA
	0.45'	69.4	NA	NA
TT 0.43'	0.50'	84.2	NA	NA
	0.60'	113.9	NA	NA
	0.70'	143.6	70.9	94.2
	0.80'	173.3	85.6	112.2
	0.90'	203.0	100.3	130.2
	1.00'	232.7	114.9	148.2
	1.10'	262.4	129.6	166.2
	1.20'	292.1	144.3	184.2

* For Detail "A"
** For Optional Detail "A"

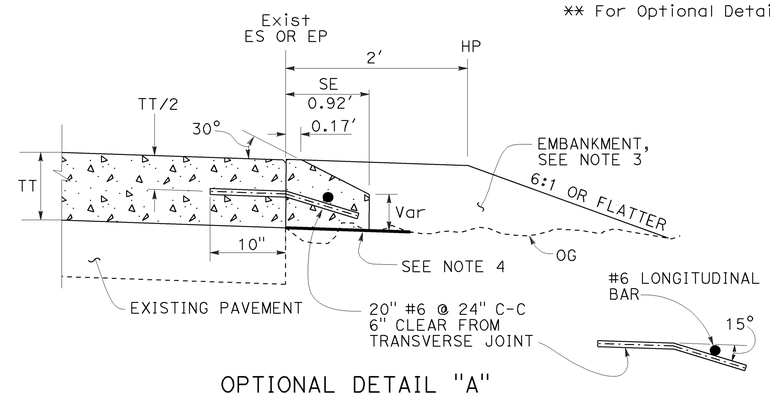

OPTIONAL DETAIL "A"
For concrete overlay
See Note 5

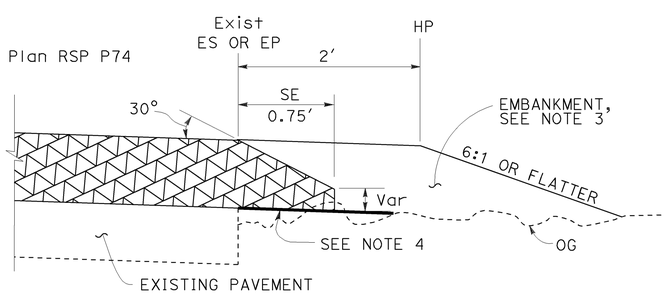

DETAIL "A"
For HMA overlay thickness more than 0.43' or concrete overlay

NOTES:

1. For limits of safety edge and vertical edge treatments, see Revised Standard Plan RSP P74.
2. Details shown for HMA overlay thickness less than 0.43'. See Detail "A" for HMA overlay thickness more than 0.43' or concrete overlay.
3. For locations and limits of shoulder backing or embankment see project plans.
4. Grade existing ground to place safety edge. 1' minimum width
5. Safety edge transverse joint must match overlay transverse joint. End of #6 longitudinal bar must be 2" ±½" clear from transverse joint.
6. Safety edge is not needed in the area of MGS, barrier, right turn lane and acceleration lane. See Revised Standard Plan RSP P74.

STATE OF CALIFORNIA
DEPARTMENT OF TRANSPORTATION

PAVEMENT EDGE TREATMENTS-OVERLAYS

NO SCALE

RSP P75 DATED NOVEMBER 15, 2013 SUPERSEDES RSP P75 DATED JANUARY 20, 2012 THAT SUPPLEMENTS THE STANDARD PLANS BOOK DATED 2010.

REVISED STANDARD PLAN RSP P75

2010 REVISED STANDARD PLAN RSP P75

10-4-13

DIST	COUNTY	ROUTE	POST MILES TOTAL PROJECT	SHEET No.	TOTAL SHEETS
03	But	70	24.0/24.5	91	123

REGISTERED CIVIL ENGINEER

November 15, 2013
PLANS APPROVAL DATE

REGISTERED PROFESSIONAL ENGINEER
Cornelis M. Hakim
No. C55610
Exp. 12-31-14
CIVIL
STATE OF CALIFORNIA

THE STATE OF CALIFORNIA OR ITS OFFICERS OR AGENTS SHALL NOT BE RESPONSIBLE FOR THE ACCURACY OR COMPLETENESS OF SCANNED COPIES OF THIS PLAN SHEET.

TO ACCOMPANY PLANS DATED 8-11-14

LEGEND:

- HMA PAVEMENT
- HMA OR CONCRETE PAVEMENT
- CONCRETE PAVEMENT

ABBREVIATIONS:

SE SAFETY EDGE
TT TOTAL THICKNESS OF SE
HW HINGE WIDTH, DISTANCE FROM ES OR EP TO HP

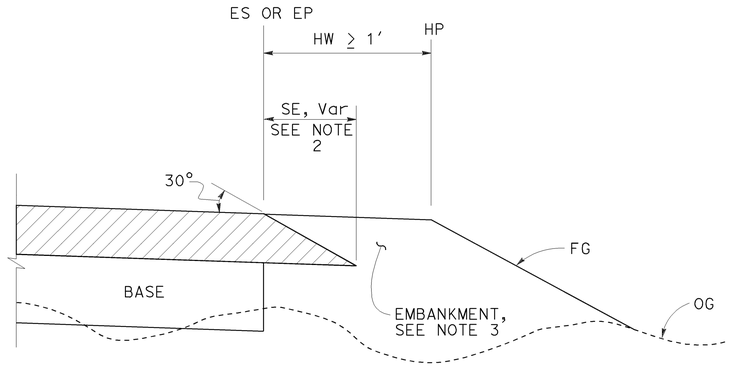

CASE K
Safety Edge - Fill Section, HW ≥ 1′

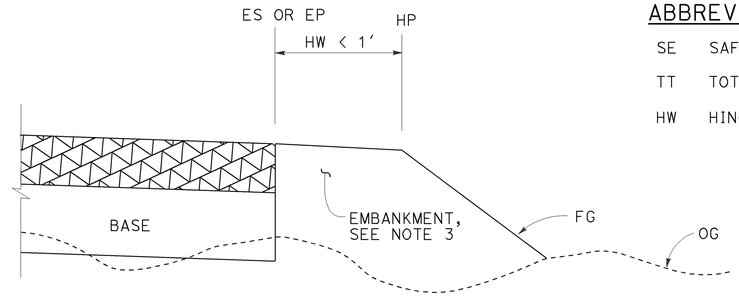

CASE L
Vertical Edge - Fill Section, HW < 1′

FILL SECTION

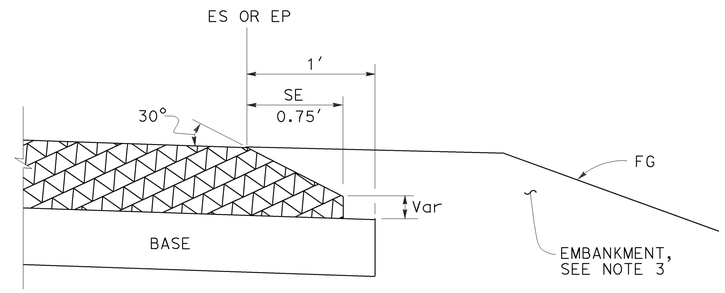

DETAIL "B"
For HMA pavement thickness more than 0.43′ or concrete pavement

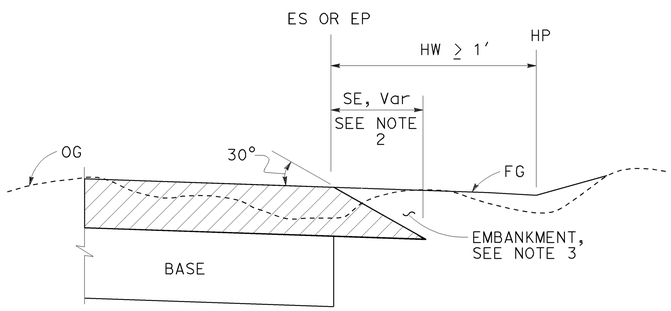

CASE M
Safety Edge - Cut Section, HW ≥ 1′

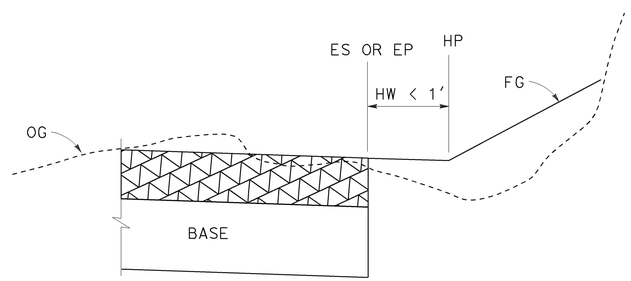

CASE N
Vertical Edge - Cut Section, HW < 1′

CUT SECTION

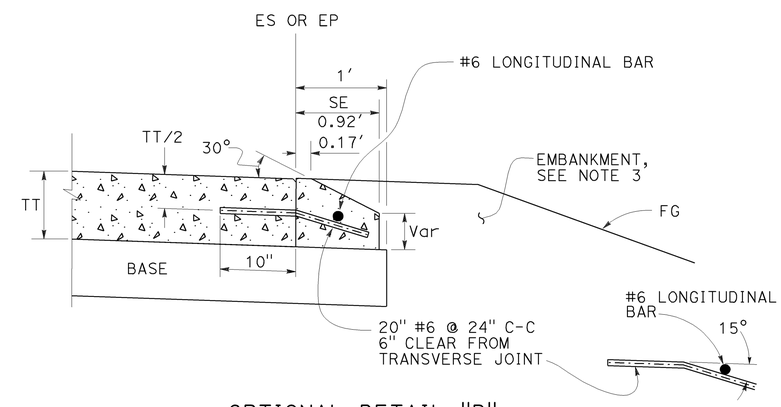

OPTIONAL DETAIL "B"
For concrete pavement
See Note 4

NOTES:

1. For limits of safety edge and vertical edge treatments, see Revised Standard Plan RSP P74
2. Details shown for HMA pavement thickness less than 0.43′. See Detail "B" for HMA pavement thickness more than 0.43′ or concrete pavement.
3. For locations and limits of embankment see project plans.
4. Safety edge transverse joint must match pavement transverse joint. End of #6 longitudinal bar must be 2" ±½" clear from transverse joint.
5. Safety edge is not needed in the area of MGS, barrier, right turn lane and acceleration lane. See Revised Standard Plan RSP P74.

STATE OF CALIFORNIA
DEPARTMENT OF TRANSPORTATION

PAVEMENT EDGE TREATMENTS-NEW CONSTRUCTION

NO SCALE

RSP P76 DATED NOVEMBER 15, 2013 SUPERSEDES RSP P76 DATED JANUARY 20, 2012 THAT SUPPLEMENTS THE STANDARD PLANS BOOK DATED 2010.

REVISED STANDARD PLAN RSP P76

2010 REVISED STANDARD PLAN RSP P76

10-4-13

Dist	COUNTY	ROUTE	POST MILES TOTAL PROJECT	SHEET No.	TOTAL SHEETS
03	But	70	24.0/24.5	92	123

LICENSED LANDSCAPE ARCHITECT

July 19, 2013
PLANS APPROVAL DATE

THE STATE OF CALIFORNIA OR ITS OFFICERS OR AGENTS SHALL NOT BE RESPONSIBLE FOR THE ACCURACY OR COMPLETENESS OF SCANNED COPIES OF THIS PLAN SHEET.

LICENSED LANDSCAPE ARCHITECT — Gregory A. Balzer — 2015 — 03 Effective Date — 2-28-15 Renewal Date — 7-19-13 Date — STATE OF CALIFORNIA

TO ACCOMPANY PLANS DATED 8-11-14

A

AB	AGGREGATE BASE
ABS	ACRYLONITRILE-BUTADIENE-STYRENE
AC	ASPHALT CONCRETE
ACC	ARMOR-CLAD CONDUCTORS
Adj	ADJACENT/ADJUSTABLE
AIC	AUXILIARY IRRIGATION CONTROLLER
Alt	ALTERNATIVE
AMEND	AMENDMENT
ARV	AIR RELEASE VALVE
AUTO	AUTOMATIC
AUX	AUXILIARY
AVB	ATMOSPHERIC VACUUM BREAKER

B

B&B	BALLED AND BURLAPPED
B/B	BRASS/BRONZE
B/B/PL	BRASS/BRONZE/PLASTIC
B/PL	BRASS/PLASTIC
BFM	BONDED FIBER MATRIX
Bit Ctd	BITUMINOUS COATED
BP	BOOSTER PUMP
BPA	BACKFLOW PREVENTER ASSEMBLY
BPE	BACKFLOW PREVENTER ENCLOSURE
BV	BALL VALVE

C

C	CONDUIT
CAP	CORRUGATED ALUMINUM PIPE
CARV	COMBINATION AIR RELEASE VALVE
CB	COUPLING BAND
CCA	CAM COUPLER ASSEMBLY
CEC	CONTROLLER ENCLOSURE CABINET
CHDPE	CORRUGATED HIGH DENSITY POLYETHYLENE
CL	CHAIN LINK
CNC	CONTROL AND NEUTRAL CONDUCTORS
Conc	CONCRETE
CP	COPPER PIPE
CS	COMPOST SOCK
CSP	CORRUGATED STEEL PIPE
CST	CENTER STRIP
CV	CHECK VALVE

D

Dia	DIAMETER
DIP	DUCTILE IRON PIPE
DIT	DRIP IRRIGATION TUBING
DG	DECOMPOSED GRANITE
DN	DIAMETER NOMINAL
DVA	DRIP VALVE ASSEMBLY

E

EC	EROSION CONTROL
ECTC	EROSION CONTROL TECHNOLOGY COUNCIL
Elect	ELECTRIC/ELECTRICAL
Elev	ELEVATION
ELL	ELBOW
ENCL	ENCLOSURE
EP	EDGE OF PAVEMENT
ES	EDGE OF SHOULDER
EST	END STRIP
ESTB	ESTABLISHMENT
ETW	EDGE OF TRAVELED WAY

F

F	FULL CIRCLE
F/P	FULL/PART CIRCLE
FCV	FLOW CONTROL VALVE
FERT	FERTILIZER
FG	FINISHED GRADE
FH	FLEXIBLE HOSE
FIPT	FEMALE IRON PIPE THREAD
FIS	FERTILIZER INJECTOR SYSTEM
FL	FLOW LINE
FR	FIBER ROLL
FS	FLOW SENSOR
FSC	FLOW SENSOR CABLE
FV	FLUSH VALVE

G

Galv	GALVANIZED
GARV	GARDEN VALVE
GARVA	GARDEN VALVE ASSEMBLY
GM	GRAVEL MULCH
GPH	GALLONS PER HOUR
GPM	GALLONS PER MINUTE
GSP	GALVANIZED STEEL PIPE
GV	GATE VALVE

H

H	HALF CIRCLE
HDPE	HIGH DENSITY POLYETHYLENE
HP	HORSEPOWER/HINGE POINT
HPL	HIGH PRESSURE LINE
Hwy	HIGHWAY

I

IC	IRRIGATION CONTROLLER
ICC	IRRIGATION CONTROLLER(S) IN CONTROLLER ENCLOSURE CABINET
ID	INSIDE DIAMETER
IFS	IRRIGATION FILTRATION SYSTEM
IPS	IRON PIPE SIZE
IPT	IRON PIPE THREAD
Irr	IRRIGATION

L

L	LENGTH

M

Max	MAXIMUM
MBGR	METAL BEAM GUARD RAILING
MCV	MANUAL CONTROL VALVE
MIC	MASTER IRRIGATION CONTROLLER
Min	MINIMUM
MIPT	MALE IRON PIPE THREAD
Misc	MISCELLANEOUS
Mtl	MATERIAL
MVP	MAINTENANCE VEHICLE PULLOUT

N

NCN	NO COMMON NAME
NL	NOZZLE LINE
No.	NUMBER
NPT	NATIONAL PIPE THREAD

O

O/C	ON CENTER
OD	OUTSIDE DIAMETER
OL	OVERLAP

P

P	PART CIRCLE
PB	PULL BOX
PCC	PORTLAND CEMENT CONCRETE
PE	POLYETHYLENE
Pkt	PACKET
PL	PLASTIC
PLS	PURE LIVE SEED
PLT	PLANT/PLANTING
PLT ESTB	PLANT ESTABLISHMENT
PM	POST MILE
PR	PRESSURE RATED
PRLV	PRESSURE RELIEF VALVE
PRV	PRESSURE REGULATING VALVE
PVC	POLYVINYL CHLORIDE
Pvmt	PAVEMENT

Q

Q	QUARTER CIRCLE
QCV	QUICK COUPLING VALVE

R

R	RADIUS
RCP	REINFORCED CONCRETE PIPE
RCV	REMOTE CONTROL VALVE
RCVM	REMOTE CONTROL VALVE (MASTER)
RCVMF	REMOTE CONTROL VALVE (MASTER) W/FLOW SENSOR
RCVP	REMOTE CONTROL VALVE W/PRESSURE REGULATOR
RCW	RECYCLED WATER
RECP	ROLLED EROSION CONTROL PRODUCT
REQ	REQUIRED
RICS	REMOTE IRRIGATION CONTROL SYSTEM
R/W	RIGHT OF WAY

S

S	SLIP
SCH	SCHEDULE
SF	STATE-FURNISHED
Shld	SHOULDER
Sq	SQUARE
SST	SIDE STRIP
Sta	STATION
Std	STANDARD
SW	SIDEWALK/SOUND WALL

T

T	THIRD CIRCLE/THREAD
TLS	TRUCK LOADING STANDPIPE
TQ	THREE QUARTER CIRCLE
TRM	TURF REINFORCEMENT MAT
TT	TWO-THIRDS CIRCLE
TWSA	TREE WELL SPRINKLER ASSEMBLY
Typ	TYPICAL

U

UG	UNDERGROUND

W

W	WIDTH
W/	WITH
WM	WATER METER
WS	WYE STRAINER
WSA	WYE STRAINER ASSEMBLY
WSP	WELDED STEEL PIPE
WWM	WELDED WIRE MESH

NOTE:

For additional abbreviations, see Standard Plans A10A and A10B.

STATE OF CALIFORNIA
DEPARTMENT OF TRANSPORTATION

LANDSCAPE AND EROSION CONTROL ABBREVIATIONS

NO SCALE

RSP H1 DATED JULY 19, 2013 SUPERSEDES STANDARD PLAN H1 DATED MAY 20, 2011 - PAGE 218 OF THE STANDARD PLANS BOOK DATED 2010.

REVISED STANDARD PLAN RSP H1

2010 REVISED STANDARD PLAN RSP H1

6-28-13

Dist	COUNTY	ROUTE	POST MILES TOTAL PROJECT	SHEET No.	TOTAL SHEETS
03	But	70	24.0/24.5	93	123

LICENSED LANDSCAPE ARCHITECT

November 15, 2013
PLANS APPROVAL DATE

LICENSED LANDSCAPE ARCHITECT — Gregory A. Balzer — 2015 — 02-28-15 Renewal Date — 11-15-13 Date — STATE OF CALIFORNIA

THE STATE OF CALIFORNIA OR ITS OFFICERS OR AGENTS SHALL NOT BE RESPONSIBLE FOR THE ACCURACY OR COMPLETENESS OF SCANNED COPIES OF THIS PLAN SHEET.

TO ACCOMPANY PLANS DATED 8-11-14

2010 REVISED STANDARD PLAN RSP H2

EXISTING	NEW	ITEM DESCRIPTION
		WATER METER (WM)
		BACKFLOW PREVENTER ASSEMBLY (BPA)
		BACKFLOW PREVENTER ENCLOSURE (BPE)
		BOOSTER PUMP (BP)
		TRUCK LOADING STANDPIPE (TLS)
	FS	FLOW SENSOR (FS)
		MASTER IRRIGATION CONTROLLER (MIC)
		AUXILIARY IRRIGATION CONTROLLER (AIC)
		IRRIGATION CONTROLLER (IC) IRRIGATION CONTROLLER (IC) (BATTERY) IRRIGATION CONTROLLER (IC) (SOLAR) IRRIGATION CONTROLLER (IC) (TWO WIRE) IRRIGATION CONTROLLER(S) IN CONTROLLER ENCLOSURE CABINET (ICC)
acc	ACC	ARMOR-CLAD CONDUCTORS (ACC)
cnc	CNC	CONTROL AND NEUTRAL CONDUCTORS (CNC)
		IRRIGATION CONDUIT
		EXTEND IRRIGATION CONDUIT
dip	DIP	DUCTILE IRON PIPE (SUPPLY LINE) (MAIN) (DIP)
		GALVANIZED STEEL PIPE (SUPPLY LINE) (MAIN) (GSP)
		GALVANIZED STEEL PIPE (SUPPLY LINE) (LATERAL) (GSP)
		PLASTIC PIPE (SUPPLY LINE) (MAIN)
		PLASTIC PIPE (SUPPLY LINE) (LATERAL)
cp	CP	COPPER PIPE (SUPPLY LINE)
dit	DIT	DRIP IRRIGATION TUBING
		REMOTE CONTROL VALVE (RCV) REMOTE CONTROL VALVE (MASTER) (RCVM) REMOTE CONTROL VALVE (MASTER) W/FLOW METER (RCVMF)
P	P	REMOTE CONTROL VALVE W/PRESSURE REGULATOR (RCVP)
		EXISTING MANUAL CONTROL VALVE (MCV)
	V	DRIP VALVE ASSEMBLY (DVA)
	Y	WYE STRAINER ASSEMBLY (WSA)

EXISTING	NEW	ITEM DESCRIPTION
		GATE VALVE (GV)
		BALL VALVE (BV)
		QUICK COUPLING VALVE (QCV)
		CAM COUPLER ASSEMBLY (CCA)
		GARDEN VALVE ASSEMBLY (GARVA)
		PRESSURE REGULATING VALVE (PRV)
		PRESSURE RELIEF VALVE (PRLV)
		FLOW CONTROL VALVE (FCV)
		COMBINATION AIR RELEASE VALVE (CARV)
		CHECK VALVE (CV)
		FLUSH VALVE (FV)
		EXISTING NOZZLE LINE W/TURNING UNION
		EXISTING IRRIGATION SYSTEM
		EXISTING IRRIGATION SYSTEM TO BE REMOVED
		CHAIN LINK GATE
		QUICK COUPLING VALVE W/SPRINKLER PROTECTOR
3	3	SPRINKLER W/SPRINKLER PROTECTOR
	C	CONNECT TO EXISTING SYSTEM
		CAP
		CAP EXISTING
	\\\FR\\\	FIBER ROLL
	\\\CS\\\	COMPOST SOCK

RCV SIZE
IRRIGATION CONTROLLER
CONTROLLER STATION
VALVE IN PARALLEL (IF APPLICABLE)
GPM
QUANTITY OF SPRINKLERS (WHEN SHOWN)

* 2½"-A-2b-40-60

VALVE CODE

* VALVE CODES FOR EXISTING VALVES ARE SHOWN IN A DASHED ENCLOSURE.

STATE OF CALIFORNIA
DEPARTMENT OF TRANSPORTATION

LANDSCAPE AND EROSION CONTROL SYMBOLS

NO SCALE

RSP H2 DATED NOVEMBER 15, 2013 SUPERSEDES RSP H2 DATED JULY 19, 2013 AND STANDARD PLAN H2 DATED MAY 20, 2011 - PAGE 219 OF THE STANDARD PLANS BOOK DATED 2010.

REVISED STANDARD PLAN RSP H2

10-9-13

Dist	COUNTY	ROUTE	POST MILES TOTAL PROJECT	SHEET No.	TOTAL SHEETS
03	But	70	24.0/24.5	94	123

REGISTERED CIVIL ENGINEER

July 19, 2013
PLANS APPROVAL DATE

REGISTERED PROFESSIONAL ENGINEER
Gurinderpal Bhullar
No. C48815
Exp. 9-30-14
CIVIL
STATE OF CALIFORNIA

THE STATE OF CALIFORNIA OR ITS OFFICERS OR AGENTS SHALL NOT BE RESPONSIBLE FOR THE ACCURACY OR COMPLETENESS OF SCANNED COPIES OF THIS PLAN SHEET.

TO ACCOMPANY PLANS DATED 8-11-14

2010 REVISED STANDARD PLAN RSP T9

TABLE 1

TAPER LENGTH CRITERIA AND CHANNELIZING DEVICE SPACING

SPEED (S)	MINIMUM TAPER LENGTH * FOR WIDTH OF OFFSET 12 FEET (W)				MAXIMUM CHANNELIZING DEVICE SPACING		
					X	Y	Z **
	TANGENT 2L	MERGING L	SHIFTING L/2	SHOULDER L/3	TAPER	TANGENT	CONFLICT
mph	ft	ft	ft	ft	ft	ft	ft
20	160	80	40	27	20	40	10
25	250	125	63	42	25	50	12
30	360	180	90	60	30	60	15
35	490	245	123	82	35	70	17
40	640	320	160	107	40	80	20
45	1080	540	270	180	45	90	22
50	1200	600	300	200	50	100	25
55	1320	660	330	220	55	110	27
60	1440	720	360	240	60	120	30
65	1560	780	390	260	65	130	32
70	1680	840	420	280	70	140	35

* - For other offsets, use the following merging taper length formula for L:
For speed of 40 mph or less, $L = WS^2/60$
For speed of 45 mph or more, $L = WS$

Where: L = Taper length in feet
W = Width of offset in feet
S = Posted speed limit, off-peak 85th-percentile speed prior to work starting, or the anticipated operating speed in mph

** - Use for taper and tangent sections where there are no pavement markings or where there is a conflict between existing pavement markings and channelizers (CA).

TABLE 2

LONGITUDINAL BUFFER SPACE AND FLAGGER STATION SPACING

SPEED *	Min D **	DOWNGRADE Min D ***		
		-3%	-6%	-9%
mph	ft	ft	ft	ft
20	115	116	120	126
25	155	158	165	173
30	200	205	215	227
35	250	257	271	287
40	305	315	333	354
45	360	378	400	427
50	425	446	474	507
55	495	520	553	593
60	570	598	638	686
65	645	682	728	785
70	730	771	825	891

* - Speed is posted speed limit, off-peak 85th-percentile speed prior to work starting, or the anticipated operating speed in mph

** - Longitudinal buffer space or flagger station spacing

*** - Use on sustained downgrade steeper than -3 percent and longer than 1 mile.

TABLE 3

ADVANCE WARNING SIGN SPACING

ROAD TYPE	DISTANCE BETWEEN SIGNS *		
	A	B	C
	ft	ft	ft
URBAN - 25 mph OR LESS	100	100	100
URBAN - MORE THAN 25 mph TO 40 mph	250	250	250
URBAN - MORE THAN 40 mph	350	350	350
RURAL	500	500	500
EXPRESSWAY / FREEWAY	1000	1500	2640

* - The distances are approximate, are intended for guidance purposes only, and should be applied with engineering judgment. These distances should be adjusted by the Engineer for field conditions, if necessary, by increasing or decreasing the recommmended distances.

STATE OF CALIFORNIA
DEPARTMENT OF TRANSPORTATION

TRAFFIC CONTROL SYSTEM TABLES FOR LANE AND RAMP CLOSURES

NO SCALE

RSP T9 DATED JULY 19, 2013 SUPERSEDES RSP T9 DATED APRIL 19, 2013 THAT SUPPLEMENTS THE STANDARD PLANS BOOK DATED 2010.

REVISED STANDARD PLAN RSP T9

4-30-13

Dist	COUNTY	ROUTE	POST MILES TOTAL PROJECT	SHEET No.	TOTAL SHEETS
03	But	70	24.0/24.5	95	123

Devinder Singh
REGISTERED CIVIL ENGINEER

October 17, 2014
PLANS APPROVAL DATE

REGISTERED PROFESSIONAL ENGINEER
Devinder Singh
No. C50470
Exp. 6-30-15
CIVIL
STATE OF CALIFORNIA

THE STATE OF CALIFORNIA OR ITS OFFICERS OR AGENTS SHALL NOT BE RESPONSIBLE FOR THE ACCURACY OR COMPLETENESS OF SCANNED COPIES OF THIS PLAN SHEET.

TO ACCOMPANY PLANS DATED 8-11-14

NOTES:

See Revised Standard Plan RSP T9 for tables.

Use cone spacing X for taper segment, Y for tangent segment or Z for conflict situations, as approriate, per Table 1, unless X, Y, or Z cone spacing is shown on this sheet.

Unless otherwise specified in the special provisions, all temporary warning signs shall have black legend on fluorescent orange background.

California codes are designated by (CA). Otherwise, Federal (MUTCD) codes are shown.

TYPICAL LANE CLOSURE WITH REVERSIBLE CONTROL

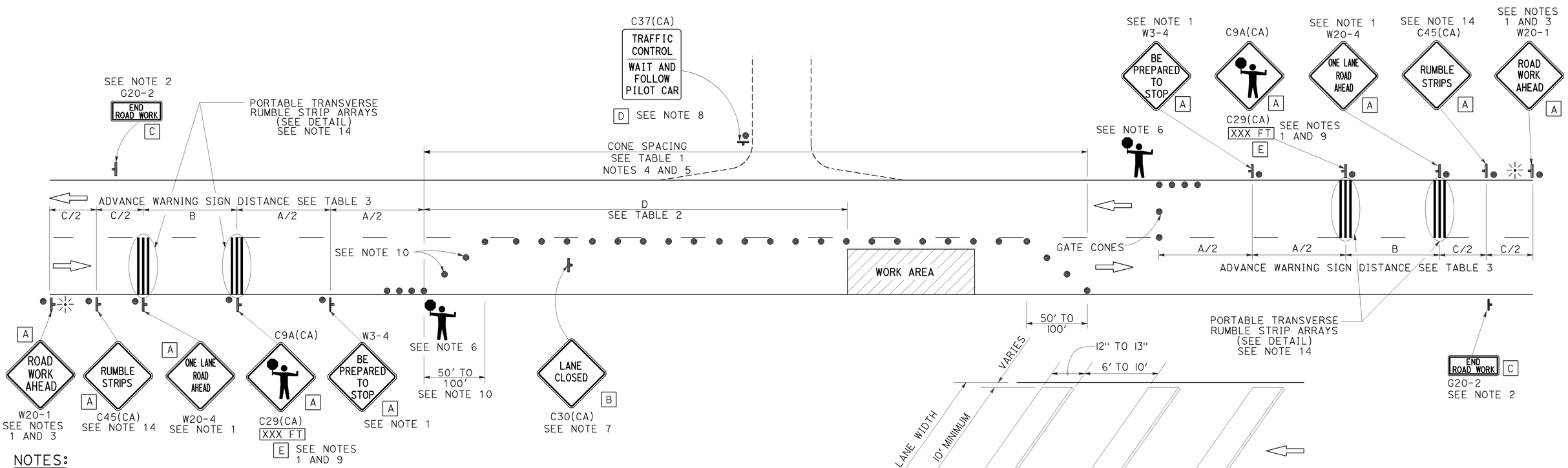

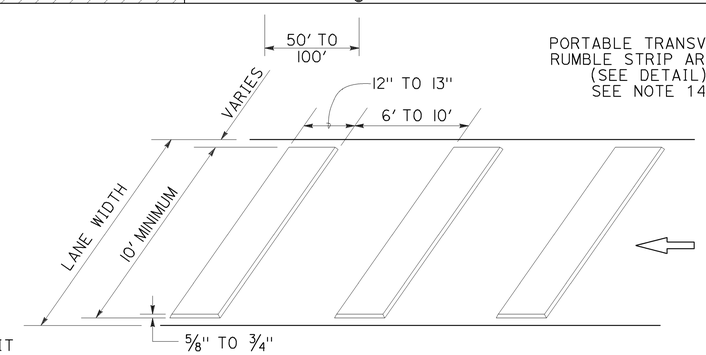

PORTABLE TRANSVERSE RUMBLE STRIP ARRAY DETAIL

NOTES:

1. Each advance warning sign in each direction of travel shall be equipped with at least two flags for daytime closure. Each flag shall be at least 16" x 16" in size and shall be orange or fluorescent red-orange in color. Flashing beacons shall be placed at the locations indicated for lane closure during hours of darkness.
2. A G20-2 "END ROAD WORK" sign, as appropriate, shall be placed at the end of the lane control unless the end of work area is obvious, or ends within a larger project's limits.
3. If the W20-1 sign would follow within 2000' of a stationary W20-1 or G20-1 "ROAD WORK NEXT _____ MILES", use a W20-4 sign for the first advance warning sign.
4. All cones used for lane closures during the hours of darkness shall be fitted with retroreflective bands (or sleeves) as specified in the specifications.
5. Portable delineators, placed at one-half the spacing indicated for traffic cones, may be used instead of cones for daytime closures only.
6. Additional advance flaggers may be required. Flagger should stand in a conspicuous place, be visible to approaching traffic as well as approaching vehicles after the first vehicle has stopped. During the hours of darkness, the flagging-station and flagger shall be illuminated and clearly visible to approaching traffic. The illumination footprint of the lighting on the ground shall be at least 20' in diameter. Place a minimum of four cones at 50' intervals in advance of flagger station as shown.
7. Place C30(CA) "LANE CLOSED" sign at 500' to 1000' intervals throughout extended work areas. They are optional if the work area is visible from the flagger station.
8. When a pilot car is used, place a C37(CA) "TRAFFIC CONTROL-WAIT AND FOLLOW PILOT CAR" sign with black legend on white background at all intersections, driveways and alleys without a flagger within traffic control area. Signs shall be clean and visible at all times. Where traffic can not be effectively self-regulated, at least one flagger shall be used at each intersection within traffic control area.
9. An optional C29(CA) sign may be placed below the C9A(CA) sign.
10. Either traffic cones or barricades shall be placed on the taper. Barricades shall be Type I, II, or III.
11. The color of the portable transverse rumble strips shall be black or orange. Use 2 arrays, each array shall consist of 3 rumble strips.
12. Portable transverse rumble strips shall not be placed on sharp horizontal or vertical curves nor shall they be placed through pedestrian crossings.
13. If the portable transverse rumble strips become out of alignment (skewed) by more than 6 inches, measured from one end to the other, they shall be readjusted to bring the placement back to the original location.
14. Portable transverse rumble strips are not required if any one of the following conditions is satisfied:
    A. Work duration occupies a location for four hours or less
    B. Posted speed limit is below 45 MPH
    C. Work is of emergency nature
    D. Work zone is in snow or icy weather conditions

LEGEND

- TRAFFIC CONE
- TEMPORARY TRAFFIC CONTROL SIGN
- PORTABLE FLASHING BEACON
- FLAGGER

SIGN PANEL SIZE (Min)

A	48" x 48"
B	30" x 30"
C	36" x 18"
D	36" x 42"
E	20" x 7"

STATE OF CALIFORNIA
DEPARTMENT OF TRANSPORTATION

TRAFFIC CONTROL SYSTEM FOR LANE CLOSURE ON TWO LANE CONVENTIONAL HIGHWAYS

NO SCALE

RSP T13 DATED OCTOBER 17, 2014 SUPERSEDES RSP T13 DATED JULY 18, 2014 AND RSP T13 DATED APRIL 19, 2013 AND STANDARD PLAN T13 DATED MAY 20, 2011 - PAGE 241 OF THE STANDARD PLANS BOOK DATED 2010.

REVISED STANDARD PLAN RSP T13

2010 REVISED STANDARD PLAN RSP T13

9-26-14

Dist	COUNTY	ROUTE	POST MILES TOTAL PROJECT	SHEET No.	TOTAL SHEETS
03	But	70	24.0/24.5	96	123

REGISTERED CIVIL ENGINEER

April 19, 2013
PLANS APPROVAL DATE

REGISTERED PROFESSIONAL ENGINEER Gurinderpal Bhullar No. C48815 Exp. 9-30-14 CIVIL STATE OF CALIFORNIA

THE STATE OF CALIFORNIA OR ITS OFFICERS OR AGENTS SHALL NOT BE RESPONSIBLE FOR THE ACCURACY OR COMPLETENESS OF SCANNED COPIES OF THIS PLAN SHEET.

TO ACCOMPANY PLANS DATED 8-11-14

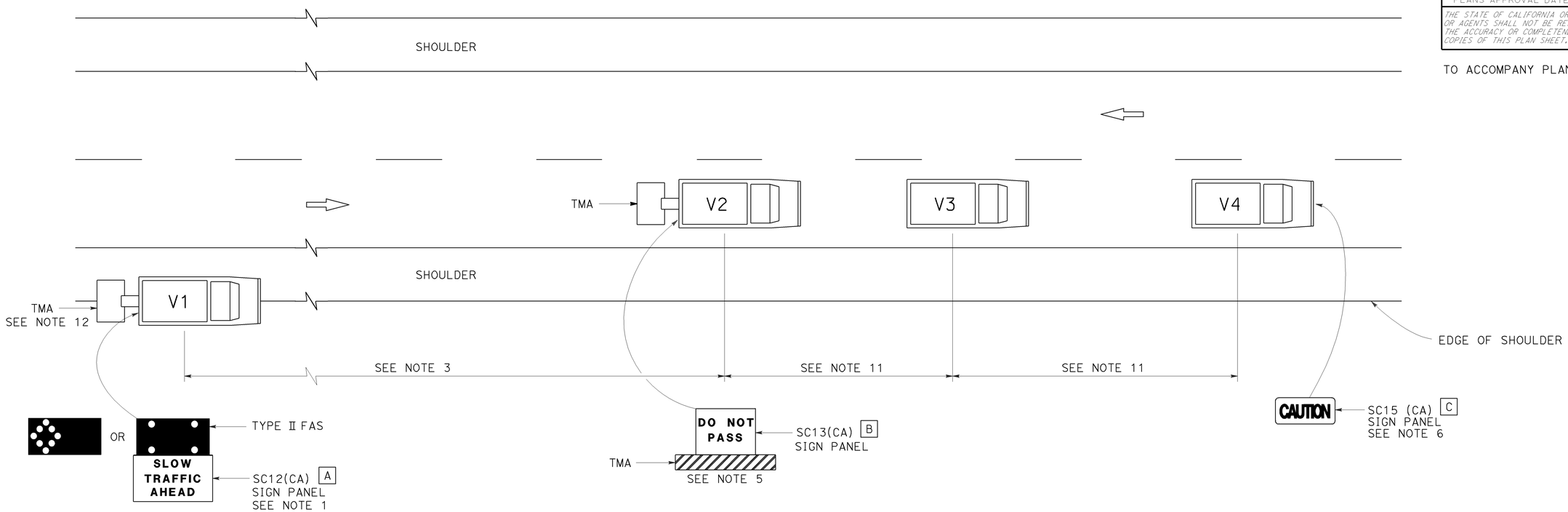

LEGEND

V1	SIGN VEHICLE
V2	SHADOW VEHICLE
V3	WORK/APPLICATION VEHICLE
V4	SIGN VEHICLE
TMA	TRUCK-MOUNTED ATTENUATOR
	FLASHING ARROW SIGN (FAS) IN FLASHING CAUTION MODE
	FLASHING ARROW SIGN (FAS) IN ALTERNATING DIAMOND CAUTION

SIGN PANEL SIZE (Min)

A	72" x 42"
B	54" x 42"
C	54" x 24"

NOTES:

1. Either a changeable message sign or a SC12(CA) "SLOW TRAFFIC AHEAD" sign shall be mounted on the rear of sign vehicle V1. The changeable message sign shall be sequenced to show the "CAUTION" message first, follow by the "SLOW TRAFFIC AHEAD" message. A Type II flashing arrow sign may be used with the SC12(CA) sign panel.
2. Sign vehicle V1 should be positioned where highly visible when shoulders are not available.
3. If traffic queues develop, sign vehicle V1 should be positioned upstream from the end of queue.
4. Vehicle-mounted sign panels shall have Type III or above retroreflective sheeting, black on white, or black on fluorescent orange, with 6" minimum series D letters per Caltrans sign specifications.
5. Shadow vehicle shall be equipped with a truck-mounted attenuator. The sign panel shown shall be mounted on the rear of shadow vehicle V2. The message "LANE CLOSED" may be used in place of the "DO NOT PASS" message.
6. The sign panel shown shall be mounted on the front of sign vehicle V4, facing opposing traffic.
7. All vehicles shall be equipped with flashing or rotating amber lights.
8. Sign vehicle V4 will not be required when the work and vehicles V2 and V3 are 2′ or more from the centerline of the highway during the work or application operations.
9. All vehicles used for lane closures shall be equipped with two-way radios and the vehicle operators shall maintain communication during the work or application operation.
10. This plan shall not be used where workers would be on foot in the work area. Use a stationary type lane closure (Revised Standard Plan T13) for this condition.
11. Minimize spacing between vehicles V2 and V3 and vehicles V3 and V4 to deter road users from driving in between them.
12. If sign vehicle V1 encroaches into the traffic lane due to insufficient shoulder width, sign vehicle V1 shall be equipped with a truck-mounted attenuator. Sign vehicle V1 shall stay as close to the edge of shoulder as practicable.

STATE OF CALIFORNIA
DEPARTMENT OF TRANSPORTATION

TRAFFIC CONTROL SYSTEM FOR MOVING LANE CLOSURE ON TWO LANE HIGHWAYS

NO SCALE

RSP T17 DATED APRIL 19, 2013 SUPERSEDES STANDARD PLAN T17
DATED MAY 20, 2011 - PAGE 245 OF THE STANDARD PLANS BOOK DATED 2010.

REVISED STANDARD PLAN RSP T17

2010 REVISED STANDARD PLAN RSP T17

12-18-12

Dist	COUNTY	ROUTE	POST MILES TOTAL PROJECT	SHEET No.	TOTAL SHEETS
03	But	70	24.0/24.5	97	123

REGISTERED CIVIL ENGINEER

November 15, 2013
PLANS APPROVAL DATE

REGISTERED PROFESSIONAL ENGINEER Tillat Satter No. C42892 Exp. 3-31-14 CIVIL STATE OF CALIFORNIA

THE STATE OF CALIFORNIA OR ITS OFFICERS OR AGENTS SHALL NOT BE RESPONSIBLE FOR THE ACCURACY OR COMPLETENESS OF SCANNED COPIES OF THIS PLAN SHEET.

TO ACCOMPANY PLANS DATED 8-11-14

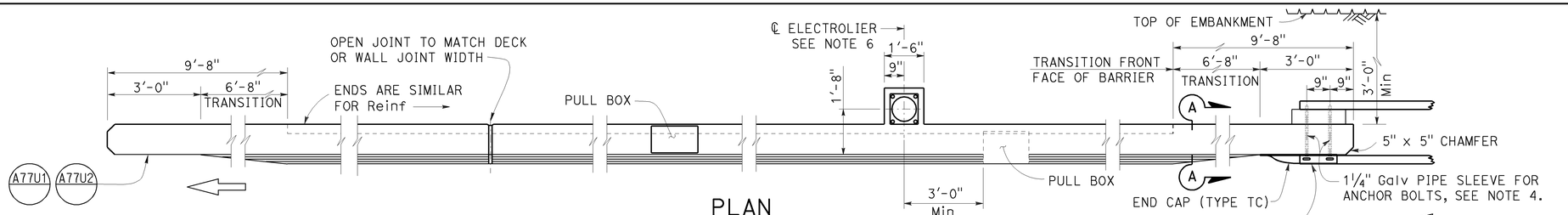

PLAN

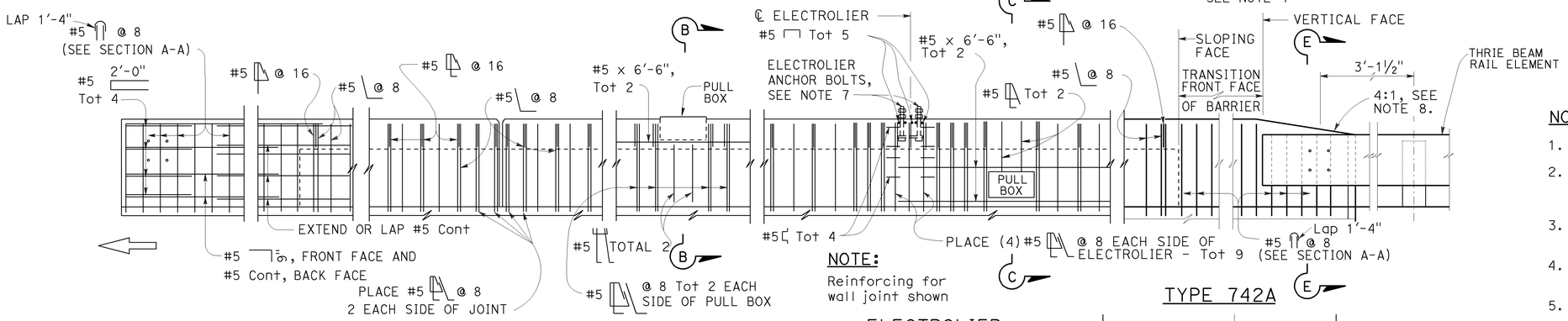

METAL RAILING CONNECTION

DECK OR WALL JOINT

NOTE:
Reinforcing for wall joint shown

ELEVATION

ELECTROLIER
(See Note 5)

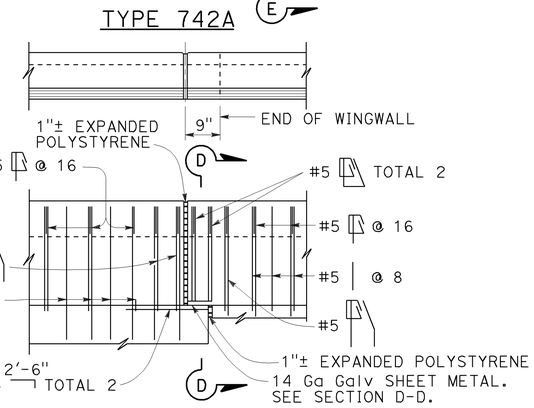

TYPE 742A TYPE 742B

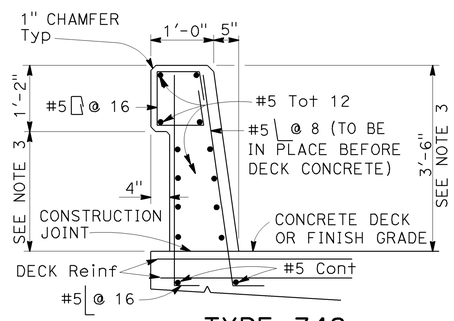

TYPE 742

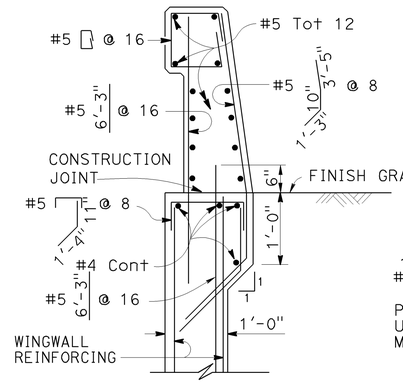

TYPE 742A

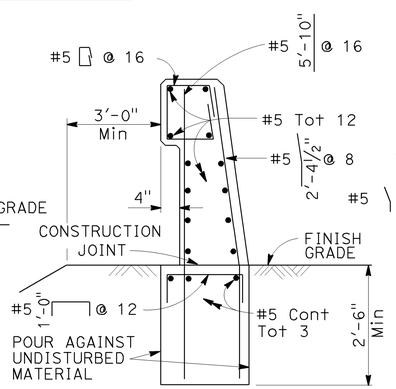

TYPE 742B

NOTE:
Types 742A & 742B are similar to Type 742 except as noted

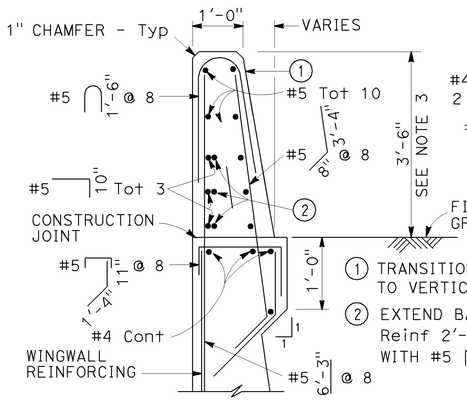

SECTION A-A

Details shown for barrier anchorage to Type 742A. Anchorage for barrier Types 742 and 742A are similar to their respective details.

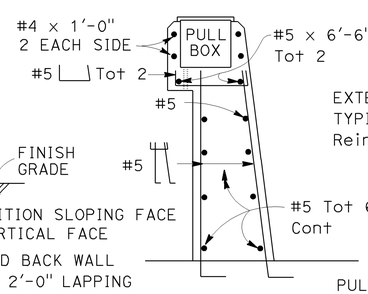

SECTION B-B

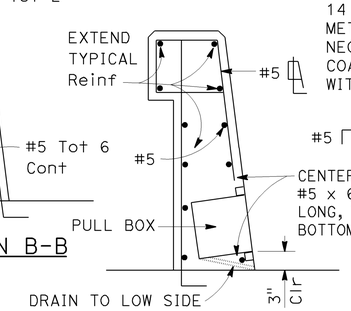

SECTION C-C
See Notes

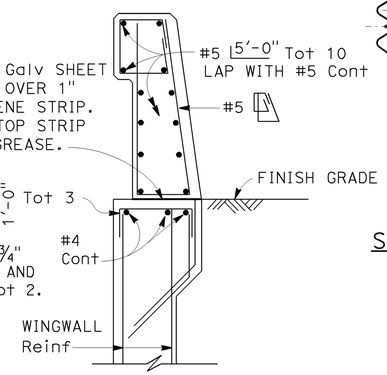

SECTION D-D

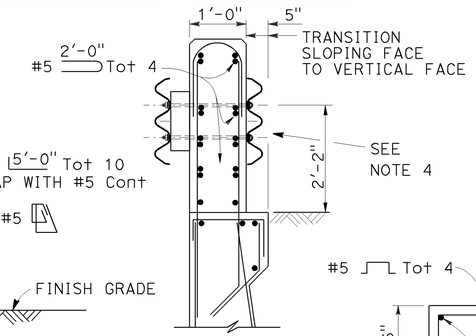

SECTION E-E
See Note 4

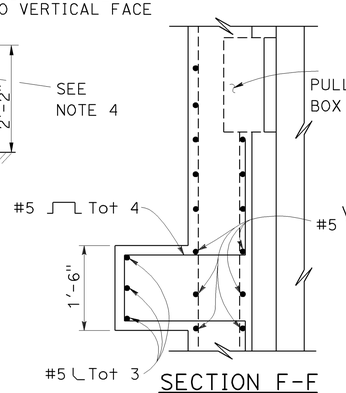

SECTION F-F

NOTES:

1. Walls are to be backfilled before barrier is placed.
2. Clearance to reinforcing steel in barrier to be 1", except as noted. Longitudinal reinforcement to stop at all expansion joints.
3. Dimensions may vary with roadway cross slope and with certain thickness of surfacing. See Project Plans.
4. For typical metal railing connection details not shown, see Revised Standard Plans RSP A77U1 and RSP A77U2.
5. See Standard Plans ES-9A, ES-9B, ES-9C, ES-9D and ES-9E for electrical details. The maximum number of conduits in the barrier is limited to two 2" conduits along with one 3" conduit. When a 3" conduit is used, it is restricted to the base of the barrier.
6. For electrolier mounting details, See Standard Plans ES-6A and ES-6B.
7. Minimum concrete edge distance, to the reinforcing shown, shall be maintained. Edge distance may be adjusted to accommodate increase in concrete cover for architectual treatment.
8. Taper the top of the end of the bridge railing at 4:1 to match the top elevation of the thrie beam rail element.

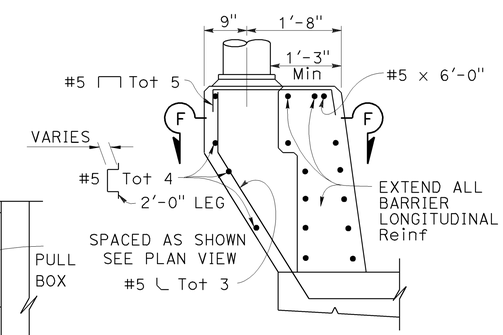

PEDESTAL ELEVATION

STATE OF CALIFORNIA
DEPARTMENT OF TRANSPORTATION

CONCRETE BARRIER TYPE 742

NO SCALE

RSP B11-57 DATED NOVEMBER 15, 2013 SUPERSEDES RSP B11-57 DATED JULY 19, 2013 AND STANDARD PLAN B11-57 DATED MAY 20, 2011 - PAGE 299 OF THE STANDARD PLANS BOOK DATED 2010.

REVISED STANDARD PLAN RSP B11-57

2010 REVISED STANDARD PLAN RSP B11-57

10-4-13

Dist	COUNTY	ROUTE	POST MILES TOTAL PROJECT	SHEET No.	TOTAL SHEETS
03	But	70	24.0/24.5	98	123

Theresa Gabriel
REGISTERED ELECTRICAL ENGINEER

July 19, 2013
PLANS APPROVAL DATE

REGISTERED PROFESSIONAL ENGINEER Theresa Aziz Gabriel No. E15129 Exp. 6-30-14 ELECTRICAL STATE OF CALIFORNIA

THE STATE OF CALIFORNIA OR ITS OFFICERS OR AGENTS SHALL NOT BE RESPONSIBLE FOR THE ACCURACY OR COMPLETENESS OF SCANNED COPIES OF THIS PLAN SHEET.

TO ACCOMPANY PLANS DATED 8-11-14

LEGEND:

AB	ABANDON. IF APPLIED TO CONDUIT, REMOVE CONDUCTORS
BC	INSTALL PULL BOX IN EXISTING CONDUIT RUN
BP	PEDESTRIAN BARRICADE, TYPE AS INDICATED ON PLAN
CB	INSTALL CONDUIT INTO EXISTING PULL BOX
CC	CONNECT NEW AND EXISTING CONDUIT. REMOVE EXISTING CONDUCTORS AND INSTALL CONDUCTORS AS INDICATED
CF	CONDUIT TO REMAIN FOR FUTURE USE. REMOVE CONDUCTORS. INSTALL PULL TAPE
DH	DETECTOR HANDHOLE
FA	FOUNDATION TO BE ABANDONED
IS	INSTALL SIGN ON SIGNAL MAST ARM
NS	NO SLIP BASE ON STANDARD
PEC	PHOTOELECTRIC CONTROL
PEU	PHOTOELECTRIC UNIT
RC	EQUIPMENT OR MATERIAL TO BE REMOVED AND BECOME THE PROPERTY OF THE CONTRACTOR
RE	REMOVE ELECTROLIER, FUSES AND BALLAST. TAPE ENDS OF CONDUCTORS
RL	RELOCATE EQUIPMENT
RR	REMOVE AND REUSE EQUIPMENT
RS	REMOVE AND SALVAGE EQUIPMENT
SC	SPLICE NEW TO EXISTING CONDUCTORS
SD	SERVICE DISCONNECT
TSP	TELEPHONE SERVICE POINT

ABBREVIATIONS

APS	ACCESSIBLE PEDESTRIAN SIGNAL
BBS	BATTERY BACKUP SYSTEM
BC	BOLT CIRCLE
BPB	BICYCLE PUSH BUTTON
C	CONDUIT
CB	CIRCUIT BREAKER
CCTV	CLOSED CIRCUIT TELEVISION
Ckt	CIRCUIT
CMS	CHANGEABLE MESSAGE SIGN
Ctid	CALTRANS IDENTIFICATION
Comm	COMMUNICATION
DLC	LOOP DETECTOR LEAD-IN CABLE
EMS	EXTINGUISHABLE MESSAGE SIGN
EVUC	EMERGENCY VEHICLE UNIT CABLE
EVUD	EMERGENCY VEHICLE UNIT DETECTOR
FB	FLASHING BEACON
FBCA	FLASHING BEACON CONTROL ASSEMBLY
FBS	FLASHING BEACON WITH SLIP BASE
FO	FIBER OPTIC
G	EQUIPMENT GROUNDING CONDUCTOR
GB	GROUND BUS
GFCI	GROUND FAULT CIRCUIT INTERRUPTER
HAR	HIGHWAY ADVISORY RADIO
Hex	HEXAGONAL
HPS	HIGH PRESSURE SODIUM
IISNS	INTERNALLY ILLUMINATED STREET NAME SIGN
ISL	INDUCTION SIGN LIGHTING
LED	LIGHT EMITTING DIODE
LMA	LUMINAIRE MAST ARM
LPS	LOW PRESSURE SODIUM
Ltg	LIGHTING
Lum	LUMINAIRE
M	METERED
MAT	MAST ARM MOUNTING TOP ATTACHMENT
MAS	MAST ARM MOUNTING SIDE ATTACHMENT
M/M	MULTIPLE TO MULTIPLE TRANSFORMER
Mtg	MOUNTING
MV	MERCURY VAPOR LIGHTING FIXTURE
MVDS	MICROWAVE VEHICLE DETECTION SYSTEM
N	NEUTRAL (GROUNDED CONDUCTOR)
NB	NEUTRAL BUS
NC	NORMALLY CLOSE
NO	NORMALLY OPEN
P	CIRCUIT BREAKER'S POLE
PB	PULL BOX
PBA	PUSH BUTTON ASSEMBLY
PEC	PHOTOELECTRIC CONTROL
Ped	PEDESTRIAN
PEU	PHOTOELECTRIC UNIT
PT	CONDUIT WITH PULL TAPE
RE	RELOCATED EQUIPMENT
RM	RAMP METERING
RWIS	ROADSIDE WEATHER INFORMATION SYSTEM
SB	SLIP BASE
SIC	SIGNAL INTERCONNECT CABLE
Sig	SIGNAL
SMA	SIGNAL MAST ARM
SNS	STREET NAME SIGN
SP	SERVICE POINT
TDC	TELEPHONE DEMARCATION CABINET
TMS	TRAFFIC MONITORING STATION
TOS	TRAFFIC OPERATIONS SYSTEM
Veh	VEHICLE
VIVDS	VIDEO IMAGE VEHICLE DETECTION SYSTEM
WIM	WEIGH-IN-MOTION
Xfmr	TRANSFORMER

SOFFIT AND WALL MOUNTED LUMINAIRES

PENDANT, 70 W HPS UNLESS OTHERWISE SPECIFIED

FLUSH, 70 W HPS UNLESS OTHERWISE SPECIFIED

WALL SURFACE, 70 W HPS UNLESS OTHERWISE SPECIFIED

EXISTING SOFFIT OR WALL LUMINAIRE TO REMAIN UNMODIFIED

EXISTING SOFFIT OR WALL LUMINAIRE TO BE MODIFIED AS SPECIFIED

NOTE:

Arrow indicates "street side" of luminaire.

COMMONLY USED SYMBOLS FOR UNITED STATES CUSTOMARY UNITS OF MEASUREMENT:

SYMBOL USED	DEFINITIONS
Ω	OHMS
min	MINUTE
s	SECOND
bps	BITS PER SECOND
Bps	BYTES PER SECOND
A	AMPERE
V	VOLT
V(dc)	VOLT (DIRECT CURRENT)
V(ac)	VOLT (ALTERNATING CURRENT)
FC	FOOT - CANDLE
W	WATTS
VA	VOLT-AMPERE
M	MEGA
k	KILO
m	MILLI
μ	MICRO
P	PICO
Hz	HERTZ

MISCELLANEOUS ELECTROLIERS

NEW	EXISTING	
		LUMINAIRE ON WOOD POLE
		NON-STANDARD ELECTROLIER (SEE PROJECT NOTES OR PROJECT PLANS)
		CITY ELECTROLIER
		ELECTROLIER FOUNDATION (FUTURE INSTALLATION)

NOTES:

1. HPS luminaires shall be 310 W HPS when installed on Type 21, 21D, 30, 31 and 32 Standards, unless otherwise specified. HPS luminaires shall be 200 W when installed on other type standards or poles, unless otherwise specified.
2. LED luminaires shall be 235 W when installed on Type 21, 21D, 30, 31 and 32 Standards, unless otherwise specified. LED luminaires shall be 165 W when installed on other type standards or poles, unless otherwise specified.
3. Luminaires shall be the cutoff type, ANSI Type III medium cutoff lighting distribution, unless otherwise specified.

STANDARD ELECTROLIER

NEW	EXISTING	STANDARD TYPE
		15
		15D
		15 STRUCTURE
		15D STRUCTURE
		21
		21D
		21 STRUCTURE
		21D STRUCTURE
		30
		31
		32

STATE OF CALIFORNIA
DEPARTMENT OF TRANSPORTATION

ELECTRICAL SYSTEMS (LEGEND AND ABBREVIATIONS)

NO SCALE

RSP ES-1A DATED JULY 19, 2013 SUPERSEDES STANDARD PLAN ES-1A DATED MAY 20, 2011 - PAGE 425 OF THE STANDARD PLANS BOOK DATED 2010.

REVISED STANDARD PLAN RSP ES-1A

2010 REVISED STANDARD PLAN RSP ES-1A

7-15-13

Dist	COUNTY	ROUTE	POST MILES TOTAL PROJECT	SHEET No.	TOTAL SHEETS
03	But	70	24.0/24.5	99	123

Theresa Gabriel
REGISTERED ELECTRICAL ENGINEER

July 19, 2013
PLANS APPROVAL DATE

REGISTERED PROFESSIONAL ENGINEER
Theresa Aziz Gabriel
No. E15129
Exp. 6-30-14
ELECTRICAL
STATE OF CALIFORNIA

THE STATE OF CALIFORNIA OR ITS OFFICERS OR AGENTS SHALL NOT BE RESPONSIBLE FOR THE ACCURACY OR COMPLETENESS OF SCANNED COPIES OF THIS PLAN SHEET.

TO ACCOMPANY PLANS DATED 8-11-14

CONDUIT

NEW	EXISTING	
		LIGHTING CONDUIT, UNLESS OTHERWISE INDICATED OR NOTED
		TRAFFIC SIGNAL CONDUIT
C	c	COMMUNICATION CONDUIT
T	t	TELEPHONE CONDUIT
F	f	FIRE ALARM CONDUIT
FO	fo	FIBER OPTIC CONDUIT
		CONDUIT TERMINATION
R	r	CONDUIT RISER ATTACHED TO THE STRUCTURE OR SERVICE POLE

SERVICE EQUIPMENT

NEW	EXISTING	
OH	oh	OVERHEAD LINES
U	U	WOOD POLE, "U" INDICATES UTILITY OWNED
		POLE GUY WITH ANCHOR
		UTILITY TRANSFORMER - GROUND MOUNTED
III	III	SERVICE EQUIPMENT ENCLOSURE TYPE. DOOR INDICATES FRONT OF ENCLOSURE
T	t	TELEPHONE DEMARCATION CABINET

POLE-MOUNTED SERVICE DESIGNATION

TYPE H SERVICE, 28'-10" — TYPE OF INSTALLATION AND POLE HEIGHT ABOVE GRADE

FLASHING BEACON

NEW	EXISTING	
R	R	FLASHING BEACON (ONE VEHICLE SIGNAL HEAD WITH BACKPLATE AND VISOR) "R" INDICATES RED INDICATION, "Y" INDICATES YELLOW INDICATION
Y Y	Y Y	FLASHING BEACON WITH TYPE 15-FBS STANDARD AND A SIGN.
R R	R R	FLASHING BEACON WITH TYPES 9, 9A OR 9B SIGN UNLESS OTHERWISE SPECIFIED OR INDICATED

SIGNAL EQUIPMENT

NEW	EXISTING	
C	C	PEDESTRIAN SIGNAL HEAD "C" INDICATES COUNTDOWN PEDESTRIAN HEAD
		PUSH BUTTON ASSEMBLY POST
		PEDESTRIAN BARRICADE
		VEHICLE SIGNAL HEAD (WITH BACKPLATE AND 3-SECTIONS: RED, YELLOW AND GREEN)
		VEHICLE SIGNAL HEAD WITH ANGLE VISOR
PV	PV	MODIFICATIONS OF BASIC SYMBOL: "L" INDICATES ALL NON-ARROW SECTIONS LOUVERED "LG" INDICATES LOUVERED GREEN SECTION ONLY "PV" INDICATES ALL 12" SECTIONS PROGRAMMED VISIBILITY "8" INDICATES ALL 8" SECTIONS (ONLY WHEN SPECIFIED)
		VEHICLE SIGNAL HEAD CONSISTING OF RED, YELLOW AND GREEN LEFT ARROW SECTIONS
		VEHICLE SIGNAL HEAD CONSISTING OF RED AND YELLOW SECTIONS WITH AN UP GREEN ARROW SECTION
		VEHICLE SIGNAL HEAD (5 SECTION) CONSISTING OF RED, YELLOW AND GREEN SECTIONS WITH YELLOW AND GREEN RIGHT ARROW SECTIONS
		TYPE 15TS STANDARD WITH VEHICLE SIGNAL HEAD AND LUMINAIRE
		TYPE 21TS STANDARD WITH VEHICLE SIGNAL HEAD AND LUMINAIRE
		STANDARD WITH LUMINAIRE AND SIGNAL MAST ARMS AND ATTACHED VEHICLE SIGNAL HEADS
		TYPE 1 STANDARD WITH ATTACHED VEHICLE SIGNAL HEADS
		STANDARD WITH A SIGNAL MAST ARM, ATTACHED VEHICLE SIGNAL HEADS AND INTERNALLY ILLUMINATED STREET NAME SIGN
		CONTROLLER ASSEMBLY. DOOR INDICATES FRONT OF CABINET

SIGNAL EQUIPMENT Cont

NEW	EXISTING	
		GUARD POST
		TYPE 1 STANDARD WITH RAMP METERING SIGN
		OPTICAL DETECTOR FOR THE EMERGENCY VEHICLE DETECTION SYSTEM

NOTES:

1. All signal sections shall be 12" unless shown otherwise.
2. Signal heads shall be provided with backplates unless shown otherwise.

ILLUMINATED OVERHEAD SIGN

NEW	EXISTING	
		SINGLE POST, SINGLE ILLUMINATED SIGN, BALANCED BUTTERFLY
		SINGLE POST, DOUBLE ILLUMINATED SIGN, BALANCED BUTTERFLY
		SINGLE POST, SINGLE ILLUMINATED SIGN, FULL CANTILEVER
		DOUBLE POST, SINGLE ILLUMINATED SIGN
		SINGLE ILLUMINATED SIGN MOUNTED ON STRUCTURE
		DOUBLE POST, SINGLE ILLUMINATED SIGN WITH ELECTROLIER

STATE OF CALIFORNIA
DEPARTMENT OF TRANSPORTATION

ELECTRICAL SYSTEMS (LEGEND AND ABBREVIATIONS)

NO SCALE

RSP ES-1B DATED JULY 19, 2013 SUPERSEDES STANDARD PLAN ES-1B DATED MAY 20, 2011 - PAGE 426 OF THE STANDARD PLANS BOOK DATED 2010.

REVISED STANDARD PLAN RSP ES-1B

2010 REVISED STANDARD PLAN RSP ES-1B

7-15-13

Dist	COUNTY	ROUTE	POST MILES TOTAL PROJECT	SHEET No.	TOTAL SHEETS
03	But	70	24.0/24.5	100	123

Theresa Gabriel
REGISTERED ELECTRICAL ENGINEER

July 19, 2013
PLANS APPROVAL DATE

REGISTERED PROFESSIONAL ENGINEER
Theresa Aziz Gabriel
No. E15129
Exp. 6-30-14
ELECTRICAL
STATE OF CALIFORNIA

THE STATE OF CALIFORNIA OR ITS OFFICERS OR AGENTS SHALL NOT BE RESPONSIBLE FOR THE ACCURACY OR COMPLETENESS OF SCANNED COPIES OF THIS PLAN SHEET.

TO ACCOMPANY PLANS DATED 8-11-14

EQUIPMENT IDENTIFICATION

ILLUMINATED SIGN IDENTIFICATION NUMBER:

SIGN No. 12345

10 ISL SCI 1.0

- SIGN NUMBER - PLACE ON POST OR STRUCTURE
- TRANSFORMER RATING (kVA)
- LIGHTING CONTROL TYPE
- NUMBER AND TYPE OF FIXTURES

DO NOT PLACE ON STANDARD OR STRUCTURE

ELECTROLIER OR EQUIPMENT IDENTIFICATION NUMBER:

12345 - 15'-0"

- MAST ARM LENGTH, IF SHOWN. DO NOT PLACE ON STANDARD OR STRUCTURE
- EQUIPMENT NUMBER - PLACE ON STANDARD OR STRUCTURE. EXISTING EQUIPMENT NUMBERS ARE SHOWN IN PARENTHESIS

CONDUIT AND CONDUCTOR IDENTIFICATION:

1½"C, 2#10, 15#14, 2 DLC, 12P#18 (PAIR)

- NUMBER AND SIZE OF CONDUCTORS AND CABLES
- SIZE OF CONDUIT IN INCHES

ø1, ø2, ø2P, etc.	TRAFFIC PHASE IDENTIFICATION FOR SIGNAL FACES, DETECTORS AND PHASE DIAGRAMS
1 2 3	LEGEND NUMBERS
A B C	EQUIPMENT, SIGNAL POLES, INSTALLATION OR ITEMS
1 2 3	CONDUIT RUN NUMBERS

SIGNAL AND LIGHTING STANDARD (TYPICAL DESIGNATION):

19A - 3 - 100

- WIND VELOCITY = 100 mph
- CASE 3 ARM LOADING
- STANDARD TYPE
- STANDARD PLAN SHEET NUMBER
- DETAIL, NUMBER, SECTION, TYPE OR ELEVATION

MISCELLANEOUS EQUIPMENT

NEW	EXISTING	
CMS	cms	CHANGEABLE MESSAGE SIGN
		CLOSED CIRCUIT TELEVISION CAMERA
		HIGHWAY ADVISORY RADIO POLE AND ANTENNA
EMS	ems	EXTINGUISHABLE MESSAGE SIGN
M V	m v	DETECTION DEVICE M = MICROWAVE SENSOR V = VIDEO IMAGE SENSOR

WIRING DIAGRAM LEGEND

- EXTERNAL CONDUCTOR
- CONDUCTOR OR BUS
- TIE POINT
- CONTACTOR COIL
- CONTACTOR, NO CONTACT
- TERMINAL BLOCKS
- CONTACTOR, NC CONTACT
- ENCLOSURE BOND
- GROUNDING ELECTRODE
- CIRCUIT BREAKER
- RECEPTACLE

PULL BOXES

NEW	EXISTING	
		PULL BOX, No. 5 UNLESS OTHERWISE INDICATED OR NOTED
3	9A(21)	PULL BOX, ADDITIONAL DESIGNATIONS OR DESCRIPTIONS

3 No. 3½ PULL BOX
5 No. 5 PULL BOX
6 No. 6 PULL BOX
7 No. 7 (CEILING PULL BOX)
8 No. 8 (PENDANT SOFFIT PULL BOX)
9 No. 9 PULL BOX
9A No. 9A PULL BOX

(C) COMMUNICATIONS PULL BOX
(E) PULL BOX WITH EXTENSION
(S) SPRINKLER CONTROL PULL BOX
(21) ANCHOR BOLTS AND CONDUIT FOR FUTURE INSTALLATION OF TYPE 21 STANDARD
(T) TRAFFIC PULL BOX

VEHICLE DETECTORS

5 J 9 U

- VEHICLE DETECTOR DESIGNATION
- U = UPPER
  L = LOWER
- SLOT NUMBER IN INPUT FILE
- INPUT FILE (I OR J)
- PHASE

NEW	EXISTING	
		TYPE A DETECTOR LOOP. OUTLINE OF SAWCUT SHOWN
		TYPE B DETECTOR LOOP. OUTLINE OF SAWCUT SHOWN
		TYPE C DETECTOR LOOP. OUTLINE OF SAWCUT SHOWN
		TYPE D DETECTOR LOOP. OUTLINE OF SAWCUT SHOWN
		TYPE E DETECTOR LOOP. OUTLINE OF SAWCUT SHOWN
		TYPE Q DETECTOR LOOP. OUTLINE OF SAWCUT SHOWN
		MAGNETIC DETECTOR
DH	dh	DETECTOR HANDHOLE
		MICROWAVE OR VIDEO DETECTION ZONE

STATE OF CALIFORNIA
DEPARTMENT OF TRANSPORTATION

ELECTRICAL SYSTEMS (LEGEND AND ABBREVIATIONS)

NO SCALE

RSP ES-1C DATED JULY 19, 2013 SUPERSEDES STANDARD PLAN ES-1C DATED MAY 20, 2011 - PAGE 427 OF THE STANDARD PLANS BOOK DATED 2010.

REVISED STANDARD PLAN RSP ES-1C

2010 REVISED STANDARD PLAN RSP ES-1C

7-11-13

Dist	COUNTY	ROUTE	POST MILES TOTAL PROJECT	SHEET No.	TOTAL SHEETS
03	But	70	24.0/24.5	101	123

Theresa Gabriel
REGISTERED ELECTRICAL ENGINEER

July 19, 2013
PLANS APPROVAL DATE

REGISTERED PROFESSIONAL ENGINEER
Theresa Aziz Gabriel
No. E15129
Exp. 6-30-14
ELECTRICAL
STATE OF CALIFORNIA

THE STATE OF CALIFORNIA OR ITS OFFICERS OR AGENTS SHALL NOT BE RESPONSIBLE FOR THE ACCURACY OR COMPLETENESS OF SCANNED COPIES OF THIS PLAN SHEET.

TO ACCOMPANY PLANS DATED 8-11-14

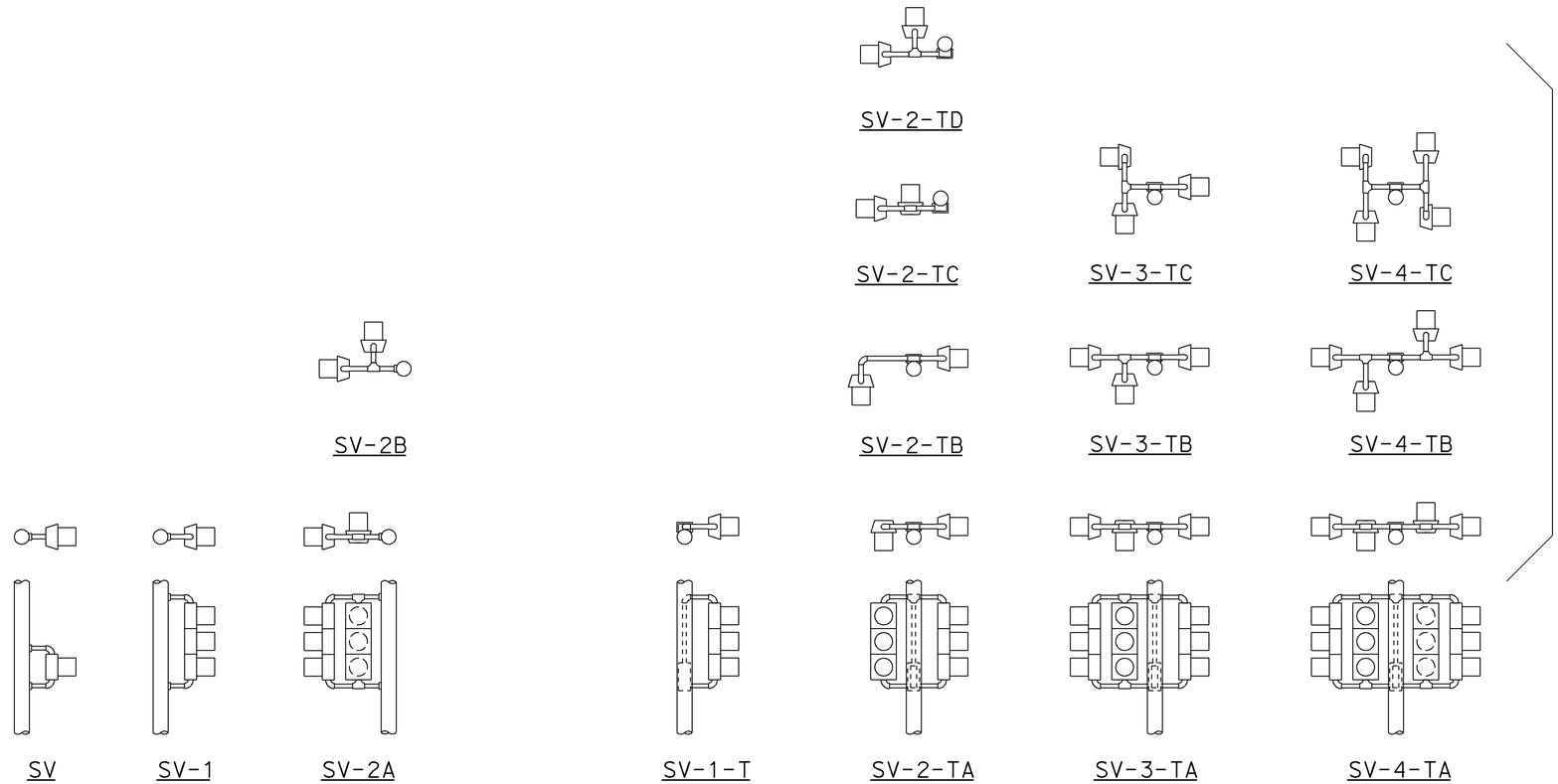

SIDE MOUNTINGS

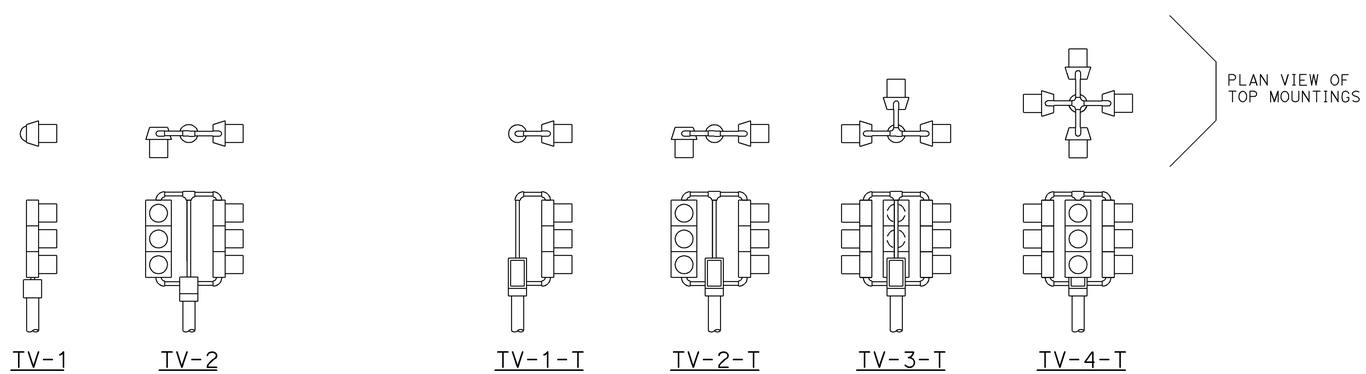

TOP MOUNTINGS

ABBREVIATIONS:

SV	SIDE MOUNTED VEHICLE SIGNALS
T	TERMINAL COMPARTMENT
TV	TOP MOUNTED VEHICLE SIGNALS
1, 2, 3, 4	NUMBER OF SIGNAL FACES (3 - SECTION, UNLESS OTHERWISE INDICATED)
A, B, C, D	CONFIGURATION OF SIGNALS

NOTES:

1. Mountings shall be oriented to provide maximum horizontal clearance to adjacent roadway.
2. Bracket arms shall be long enough to permit proper alignment of signals and backplate installation.
3. See Standard Plans ES-4D and ES-4E for attachment fitting details.

STATE OF CALIFORNIA
DEPARTMENT OF TRANSPORTATION

ELECTRICAL SYSTEMS (VEHICULAR SIGNAL HEADS AND MOUNTINGS)

NO SCALE

RSP ES-4A DATED JULY 19, 2013 SUPERSEDES STANDARD PLAN ES-4A DATED MAY 20, 2011 - PAGE 443 OF THE STANDARD PLANS BOOK DATED 2010.

REVISED STANDARD PLAN RSP ES-4A

2010 REVISED STANDARD PLAN RSP ES-4A

7-9-13

Dist	COUNTY	ROUTE	POST MILES TOTAL PROJECT	SHEET No.	TOTAL SHEETS
03	But	70	24.0/24.5	102	123

Theresa Gabriel
REGISTERED ELECTRICAL ENGINEER

July 19, 2013
PLANS APPROVAL DATE

REGISTERED PROFESSIONAL ENGINEER
Theresa Aziz Gabriel
No. E15129
Exp. 6-30-14
ELECTRICAL
STATE OF CALIFORNIA

THE STATE OF CALIFORNIA OR ITS OFFICERS OR AGENTS SHALL NOT BE RESPONSIBLE FOR THE ACCURACY OR COMPLETENESS OF SCANNED COPIES OF THIS PLAN SHEET.

TO ACCOMPANY PLANS DATED 8-11-14

2010 REVISED STANDARD PLAN RSP ES-4C

VISORS

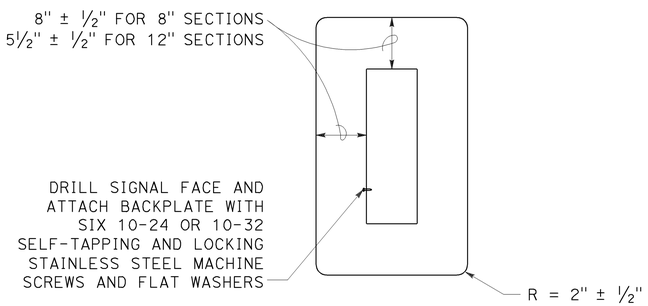

8" AND 12" SECTIONS

BACKPLATE

1/16" minimum thickness
3001-14 aluminum or plastic
when specified

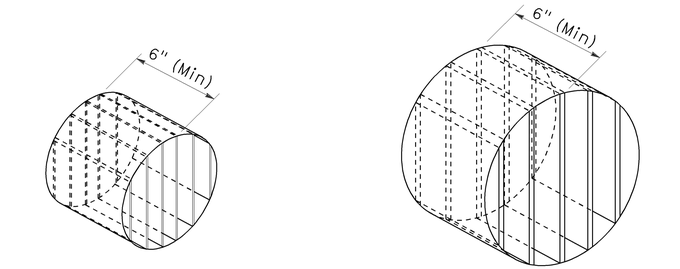

ISOMETRIC VIEW — ISOMETRIC VIEW

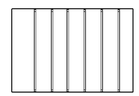

SECTION A-A

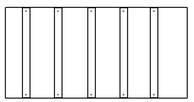

SECTION B-B

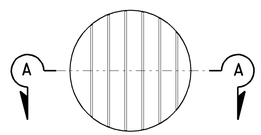

8" DIAMETER FRONT VIEW

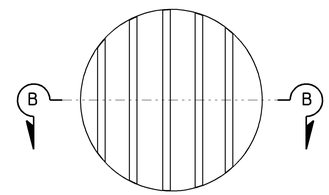

12" DIAMETER FRONT VIEW

DIRECTIONAL LOUVER

Directional louvers shall be oriented as directed by the Engineer and secured in place with one plated brass machine screw and nut.

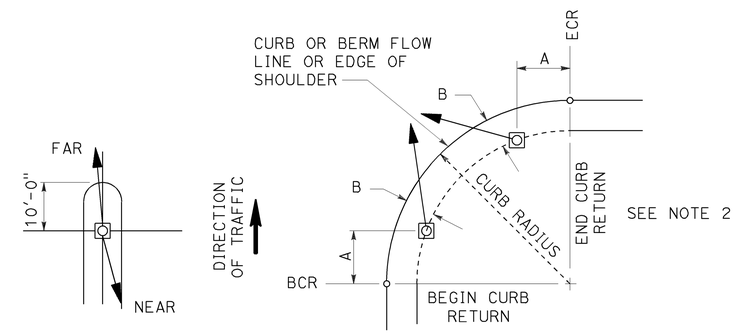

NOTES:

1. Typical signal pole placement unless dimensioned on plans.
2. For A and B dimensions, see Pole Schedule, or as directed by the Engineer.

SIGNAL STANDARD PLACEMENT DIMENSIONS AND EQUIPMENT LOCATIONS

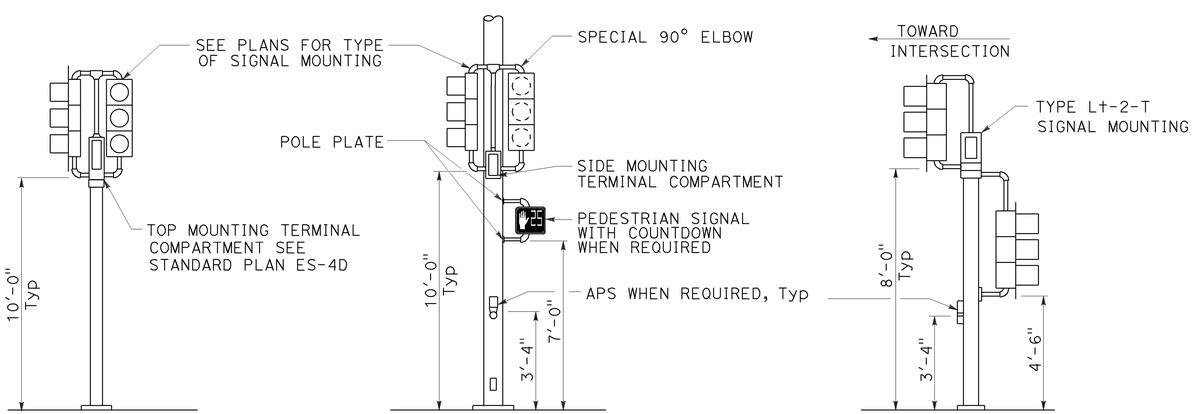

TOP MOUNTED SIGNALS (TV)
Type 1-A, 1-B, 1-C and 1-D standard as indicated on the plans

SIDE MOUNTED SIGNALS (SV AND SP)
Normally used on standards with luminaire or signal mast arm

LEFT TURN LANE SIGNAL
Type 1-A, 1-B, 1-C and 1-D standard as indicated on plans

TYPICAL SIGNAL INSTALLATIONS

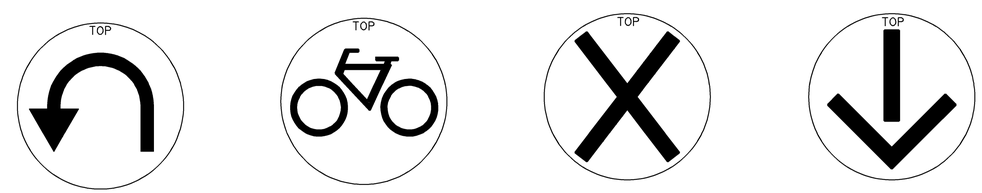

U-TURN — BICYCLE — LANE CONTROL — LANE CONTROL

SIGNAL FACES

STATE OF CALIFORNIA
DEPARTMENT OF TRANSPORTATION

ELECTRICAL SYSTEMS (VEHICULAR SIGNAL HEADS AND MOUNTINGS)

NO SCALE

RSP ES-4C DATED JULY 19, 2013 SUPERSEDES STANDARD PLAN ES-04C DATED MAY 20, 2011 - PAGE 445 OF THE STANDARD PLANS BOOK DATED 2010.

REVISED STANDARD PLAN RSP ES-4C

7-10-13

Dist	COUNTY	ROUTE	POST MILES TOTAL PROJECT	SHEET No.	TOTAL SHEETS
03	But	70	24.0/24.5	103	123

Theresa Gabriel
REGISTERED ELECTRICAL ENGINEER

July 19, 2013
PLANS APPROVAL DATE

REGISTERED PROFESSIONAL ENGINEER
Theresa Aziz Gabriel
No. E15129
Exp. 6-30-14
ELECTRICAL
STATE OF CALIFORNIA

THE STATE OF CALIFORNIA OR ITS OFFICERS OR AGENTS SHALL NOT BE RESPONSIBLE FOR THE ACCURACY OR COMPLETENESS OF SCANNED COPIES OF THIS PLAN SHEET.

TO ACCOMPANY PLANS DATED 8-11-14

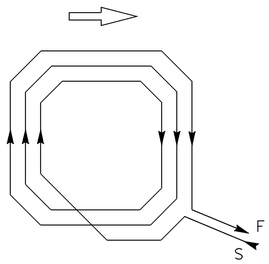

WINDING DETAIL

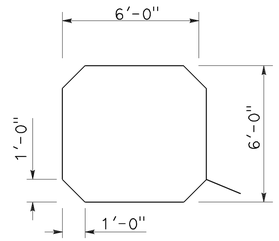

SAWCUT DETAIL

TYPE A LOOP DETECTOR CONFIGURATION

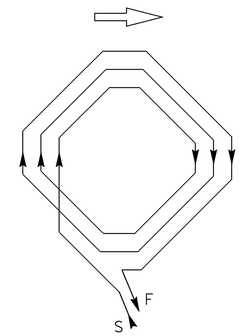

WINDING DETAIL

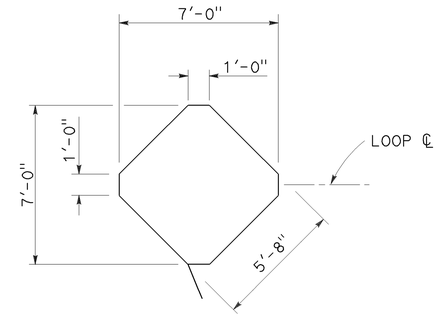

SAWCUT DETAIL

TYPE B LOOP DETECTOR CONFIGURATION

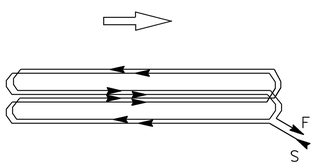

WINDING DETAIL

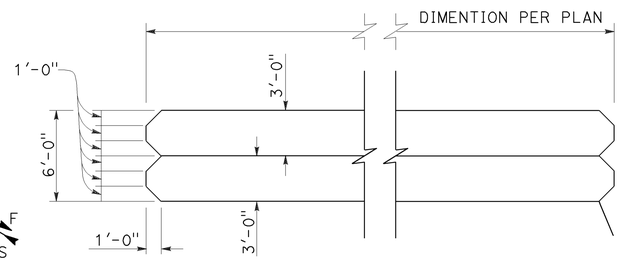

SAWCUT DETAIL

TYPE C LOOP DETECTOR CONFIGURATION

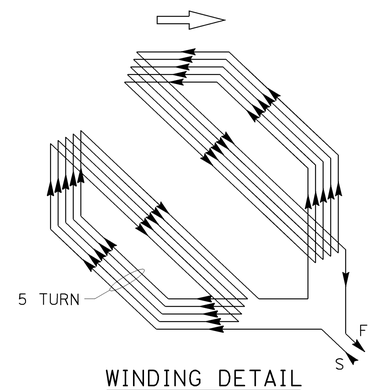

WINDING DETAIL

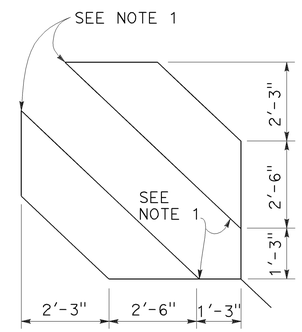

SAWCUT DETAIL

TYPE D LOOP DETECTOR CONFIGURATION

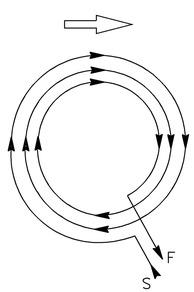

WINDING DETAIL

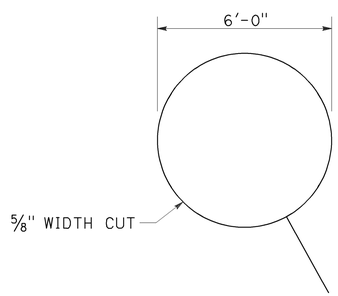

SAWCUT DETAIL

TYPE E LOOP DETECTOR CONFIGURATION

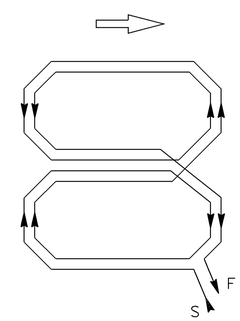

WINDING DETAIL

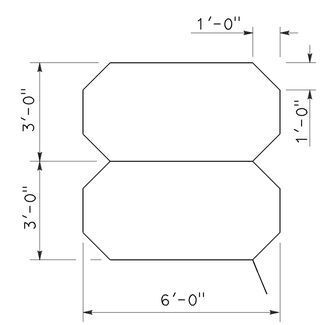

SAWCUT DETAIL

TYPE Q LOOP DETECTOR CONFIGURATION

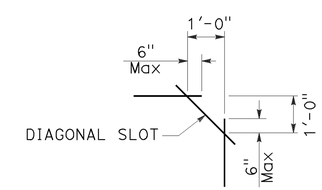

PLAN VIEW OF DIAGONAL SLOT AT CORNERS

NOTES:

1. Round corners of acute angle sawcuts to prevent damage to conductors.
2. Typical distance separating loops from edge to edge is 10' for Type A, B, D and E installation in single lane.

STATE OF CALIFORNIA
DEPARTMENT OF TRANSPORTATION

ELECTRICAL SYSTEMS (DETECTORS)

NO SCALE

RSP ES-5B DATED JULY 19, 2013 SUPERSEDES STANDARD PLAN ES-5B DATED MAY 20, 2011 - PAGE 449 OF THE STANDARD PLANS BOOK DATED 2010.

REVISED STANDARD PLAN RSP ES-5B

2010 REVISED STANDARD PLAN RSP ES-5B

7-9-13

Dist	COUNTY	ROUTE	POST MILES TOTAL PROJECT	SHEET No.	TOTAL SHEETS
03	But	70	24.0/24.5	104	123

Theresa Gabriel
REGISTERED ELECTRICAL ENGINEER

July 19, 2013
PLANS APPROVAL DATE

REGISTERED PROFESSIONAL ENGINEER Theresa Aziz Gabriel No. E15129 Exp. 6-30-14 ELECTRICAL STATE OF CALIFORNIA

THE STATE OF CALIFORNIA OR ITS OFFICERS OR AGENTS SHALL NOT BE RESPONSIBLE FOR THE ACCURACY OR COMPLETENESS OF SCANNED COPIES OF THIS PLAN SHEET.

TO ACCOMPANY PLANS DATED 8-11-14

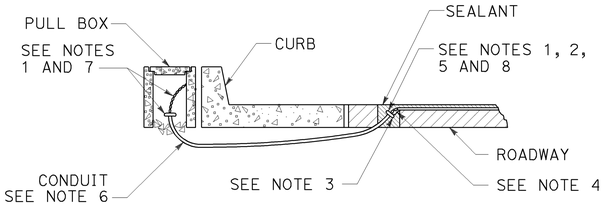

TYPE A
CURB TERMINATION DETAIL

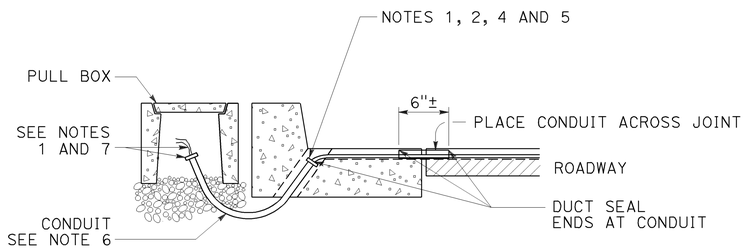

CROSS SECTION

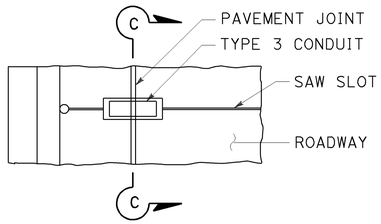

PLAN VIEW

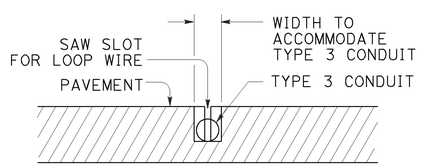

SECTION C-C

TYPE B
CURB TERMINATION DETAIL

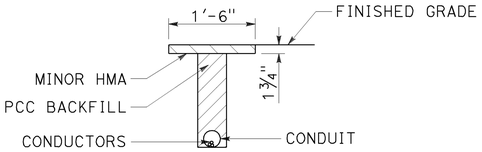

"T" TRENCH
DETAIL T

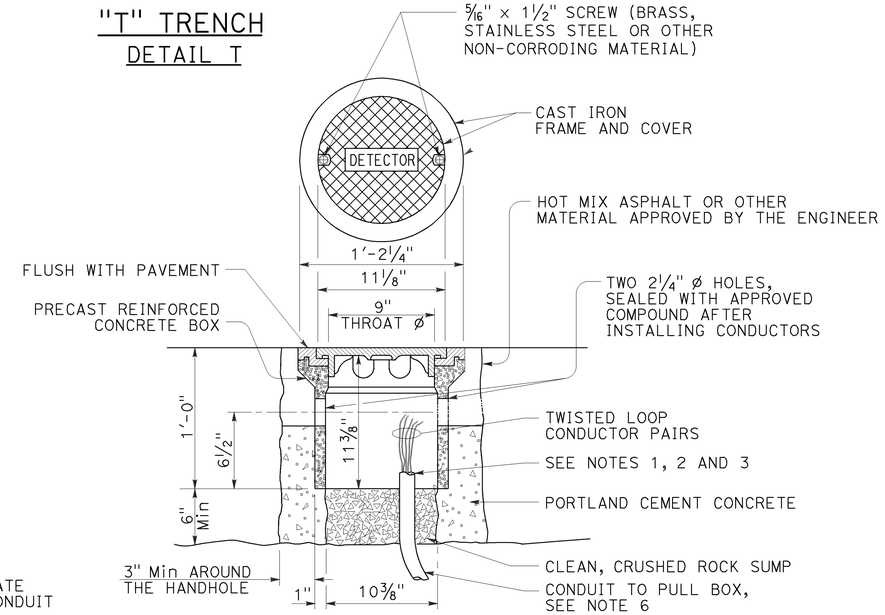

DETECTOR HANDHOLE DETAIL

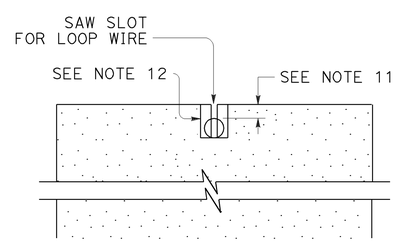

SECTION A-A

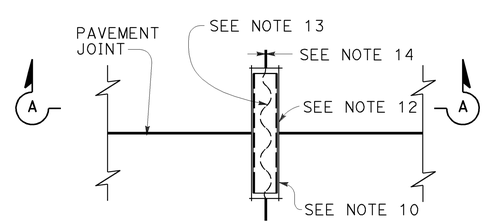

PLAN VIEW

TYPICAL LOOP LEAD-IN DETAIL
AT PAVEMENT JOINT

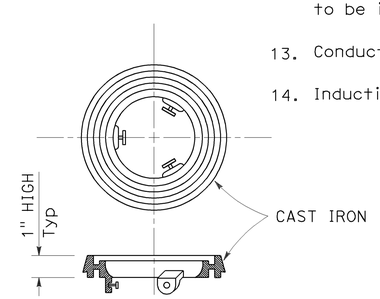

LOCKING GRADE RING

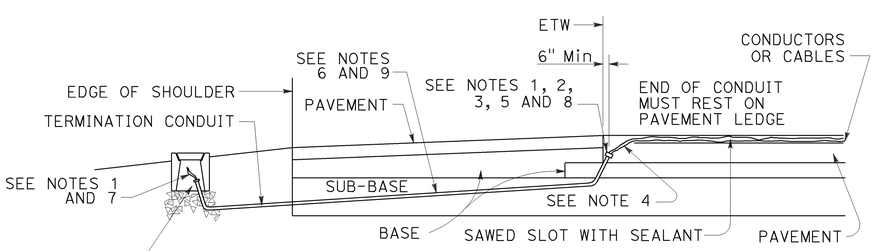

CROSS SECTION

PLAN VIEW

SHOULDER TERMINATION DETAILS

NOTES:

1. Bushing shall be used at end of conduit.
2. Tape detector conductors or cables 3" each side of bushings.
3. Install duct seal compound to each end of termination conduit before installing sealant.
4. Round all sharp edges where detector conductors or cables have to pass.
5. End of conduit shall be 3⅛" below roadway surface.
6.

Conduit size	Loop conductors
1"C minimum	1 to 2 pairs
1½"C minimum	3 to 4 pairs
2"C minimum	5 or more pairs

7. Splice detector conductors or cables to detector lead-in-cable.
8. Location of detector handhole when shown on plans.
9. When the shoulder and traveled way are paved with the same material and there is no joint between them, the conduit shall extend only 2'-0" into the shoulder pavement.
10. ¾"C, Type 3 conduit 6" long minimum, plug both ends with duct compound to keep out sealant.
11. ½" Minimum between top of conduit and pavement surface.
12. Sawcut shall not exceed 1" in width and ⅛" longer than conduit to be installed.
13. Conductors with ½" minimum slack inside conduit.
14. Inductive loop detector saw slot.

STATE OF CALIFORNIA
DEPARTMENT OF TRANSPORTATION

ELECTRICAL SYSTEMS (CURB TERMINATION AND HANDHOLE)

NO SCALE

RSP ES-5D DATED JULY 19, 2013 SUPERSEDES STANDARD PLAN ES-5D DATED MAY 20, 2011 - PAGE 451 OF THE STANDARD PLANS BOOK DATED 2010.

REVISED STANDARD PLAN RSP ES-5D

2010 REVISED STANDARD PLAN RSP ES-5D

7-9-13

Dist	COUNTY	ROUTE	POST MILES TOTAL PROJECT	SHEET No.	TOTAL SHEETS
03	But	70	24.0/24.5	105	123

REGISTERED CIVIL ENGINEER

July 19, 2013
PLANS APPROVAL DATE

REGISTERED PROFESSIONAL ENGINEER Stanley P. Johnson No. C57793 Exp. 3-31-14 CIVIL STATE OF CALIFORNIA

THE STATE OF CALIFORNIA OR ITS OFFICERS OR AGENTS SHALL NOT BE RESPONSIBLE FOR THE ACCURACY OR COMPLETENESS OF SCANNED COPIES OF THIS PLAN SHEET.

TO ACCOMPANY PLANS DATED 8-11-14

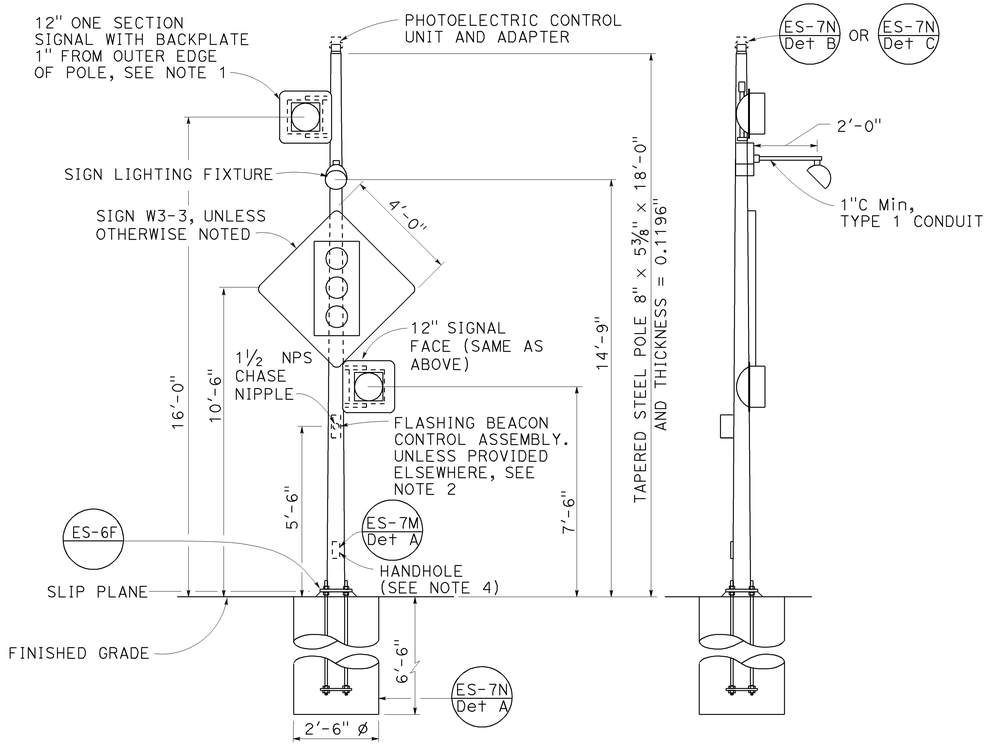

FRONT VIEW

SIDE VIEW

TYPE 15-FBS
ADVANCE FLASHING BEACON WITH SLIP BASE INSTALLATION
DETAIL A

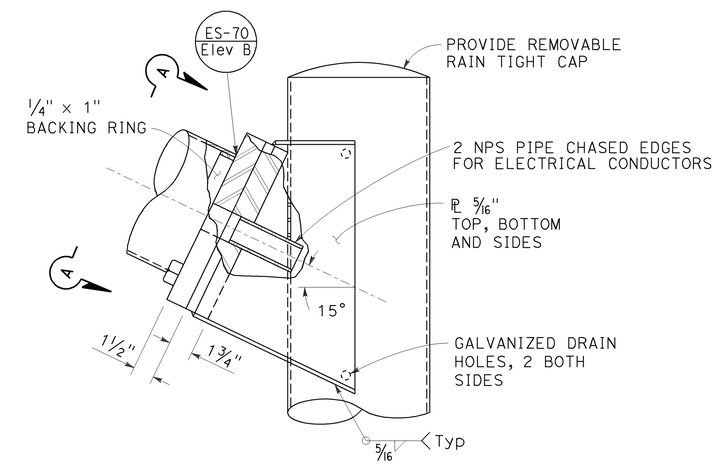

ELEVATION B

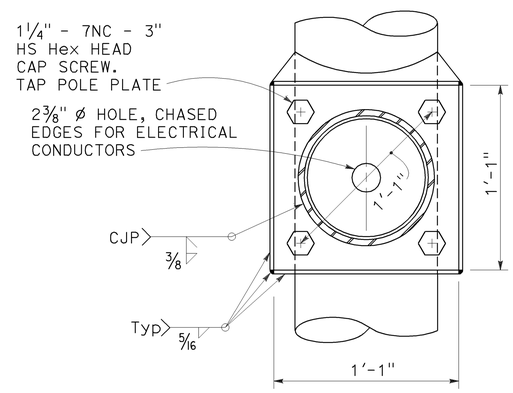

VIEW A-A

FLASHING BEACON MAST ARM CONNECTION DETAIL
DETAIL B

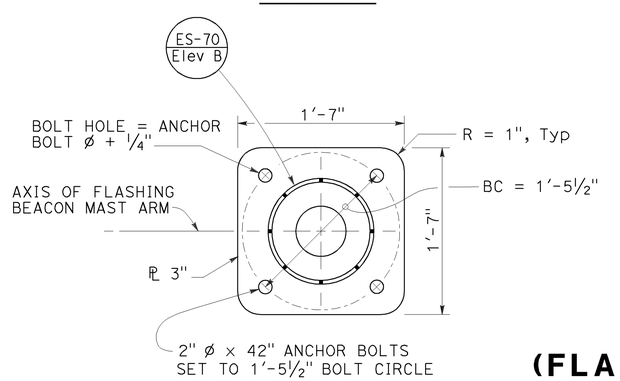

BASE PLATE

DETAIL C

NOTES:

1. See Revised Standard Plan RSP ES-4A and Standard Plan ES-4D for attachment fitting details.
2. For wiring diagram, see Standard Plan ES-14B.
3. For additional notes and details, see Standard Plans ES-7M and ES-7N.
4. Handhole shall be located on the downstream side of traffic.
5. See project plans for type of standard to be installed.

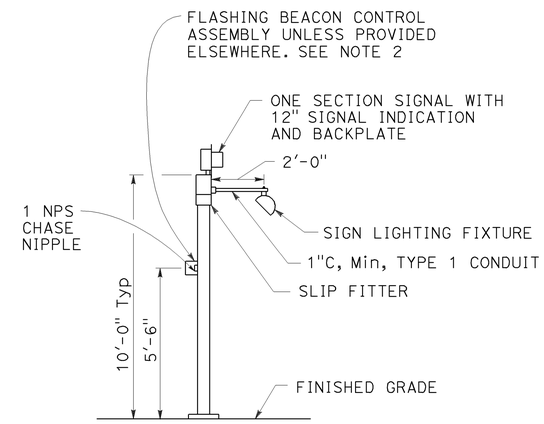

TYPE 1-A, 1-B, 1-C AND 1-D
ADVANCE FLASHING BEACON INSTALLATION
DETAIL D
See Note 5

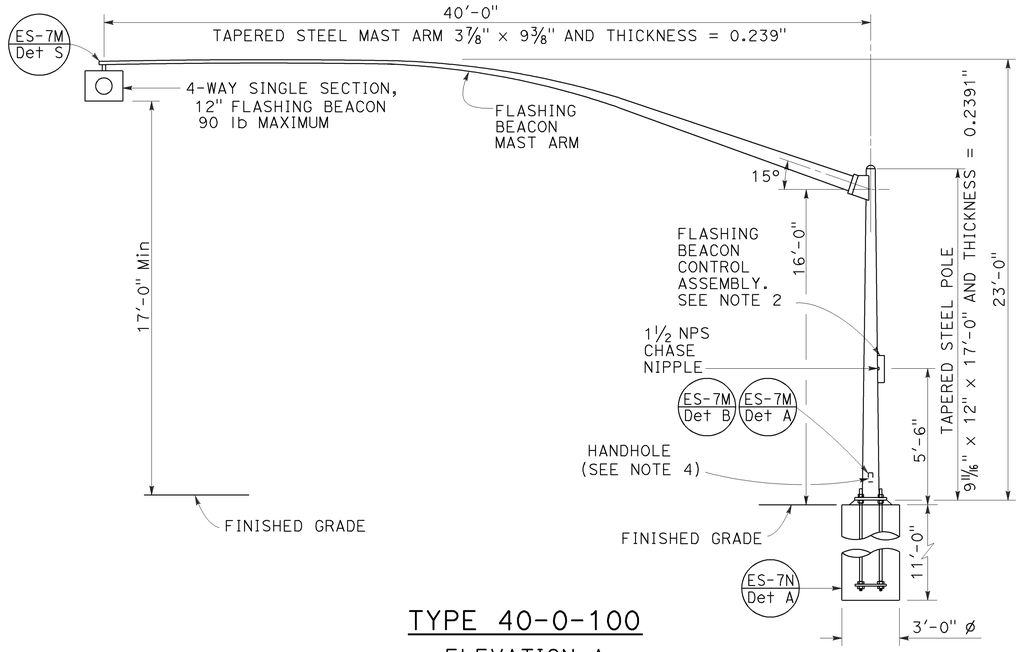

TYPE 40-0-100
ELEVATION A

STATE OF CALIFORNIA
DEPARTMENT OF TRANSPORTATION

ELECTRICAL SYSTEMS (FLASHING BEACON ON A TYPE 1, TYPE 15-FBS AND TYPE 40 STANDARD)

NO SCALE

RSP ES-7J DATED JULY 19, 2013 SUPERSEDES STANDARD PLAN ES-7J DATED MAY 20, 2011 - PAGE 471 OF THE STANDARD PLANS BOOK DATED 2010.

REVISED STANDARD PLAN RSP ES-7J

2010 REVISED STANDARD PLAN RSP ES-7J

6-26-13

DIST	COUNTY	ROUTE	POST MILES TOTAL PROJECT	SHEET NO.	TOTAL SHEETS
03	But	70	24.0/24.5	106	123

Theresa Gabriel
REGISTERED ELECTRICAL ENGINEER

July 19, 2013
PLANS APPROVAL DATE

REGISTERED PROFESSIONAL ENGINEER Theresa Aziz Gabriel No. E15129 Exp. 6-30-14 ELECTRICAL STATE OF CALIFORNIA

THE STATE OF CALIFORNIA OR ITS OFFICERS OR AGENTS SHALL NOT BE RESPONSIBLE FOR THE ACCURACY OR COMPLETENESS OF SCANNED COPIES OF THIS PLAN SHEET.

TO ACCOMPANY PLANS DATED 8-11-14

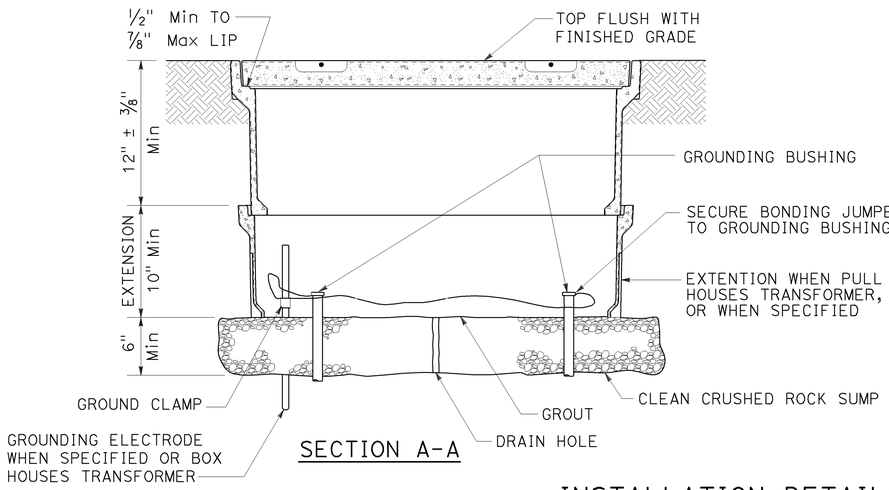

SECTION A-A

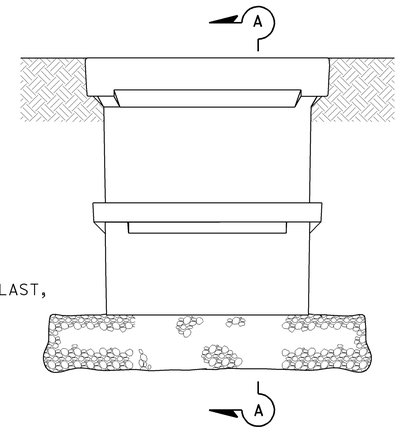

SIDE VIEW

INSTALLATION DETAILS

DETAIL A

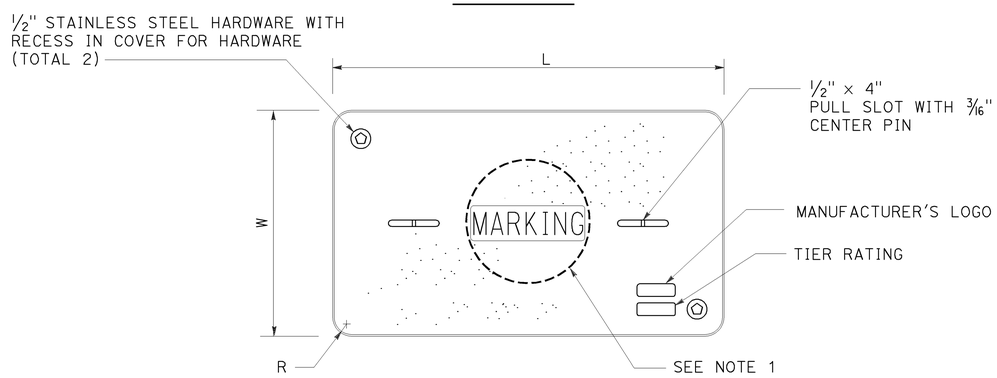

COVER TOP VIEW

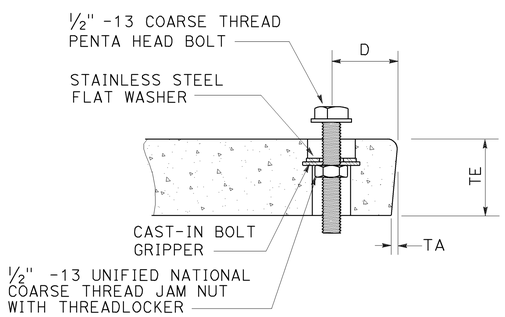

TYPICAL COVER CAPTIVE BOLT

OR SIMILAR

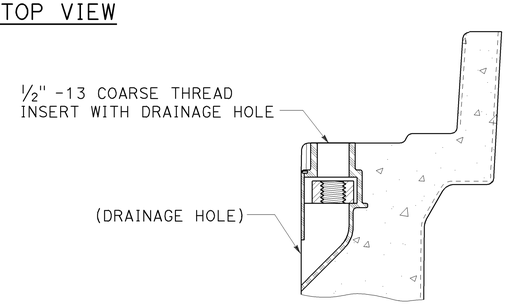

TYPICAL THREADED INSERT

OR SIMILAR

DIMENSION TABLE										
PULL BOX	PULL BOX			COVER						
	MINIMUM DEPTH BOX	MINIMUM DEPTH EXTENSION	MAXIMUM WEIGHT	L	W	R	TE	TA	D	MAXIMUM WEIGHT
No. 3½	12"	N/A	40 lb	1′ - 3⅜"	10⅛"	1⅜"	2"	⅛"	1¾"	30 lb
No. 5	12"	10"	55 lb	1′ - 11¼"	1′ - 1¾"	1⅜"	2"	⅛"	1¾"	60 lb
No. 6	12"	10"	70 lb	2′ - 6½"	1′ - 5½"	1⅜"	2"	⅛"	2"	85 lb

NOTES:

1. Pull box covers shall be marked as follows: "SERVICE" Service circuits between service point and service disconnect; "SPRINKLER-CONTROL" sprinkler control circuits, 50 V or less; "CALTRANS" on all pull boxes, except pull boxes marked "SPRINKLER-CONTROL"; and "TELEPHONE" Telephone service;

   A) No. 3½ pull box.
      1) "SIGNAL" - Traffic signal circuits with or without lighting or sign lighting circuits.
      2) "LIGHTING" - Lighting or sign lighting circuits where voltage is under 600 V.

   B) No. 5, 6, 9 or 9A pull box.
      1) "TRAFFIC SIGNAL" - Traffic signal circuits with or without lighting or sign lighting circuits.
      2) "LIGHTING" - Lighting or sign lighting circuits where voltage is under 600 V.
      3) "LIGHTING-HIGH VOLTAGE" - Lighting or sign lighting circuits where voltage is above 600 V.
      4) "IRRIGATION" - Circuits to irrigation controller 120 V or more.
      5) "RAMP METER" - Ramp meter circuits.
      6) "COUNT STATION" - Count or speed monitor circuits.
      7) "COMMUNICATIONS" - Communication circuits.
      8) "TOS COMMUNICATIONS" - TOS communication line.
      9) "TOS POWER" - TOS power.
      10) "TDC POWER" - Telephone demarcation cabinet power.
      11) "CCTV" - Closed circuit television circuits.
      12) "TMS" - Traffic monitoring station circuits.
      13) "CMS" - Changeable message sign circuits.
      14) "HAR" - Highway advisory radio circuits.
      15) "BOOSTER PUMP" - Booster pump circuit.

2. The nominal dimensions of the opening in which the cover sets shall be the same as the cover dimensions except the length and width dimensions shall be ⅛" greater.

3. Covers and boxes shall be interchangeable with California standard male and female gages. When interchanged with a standard male or female gage, the top surfaces shall be flush within ⅛". Top outside radius of covers and pull boxes shall have a ⅛" radius.

4. Pull box extension may be another pull box as long as the bottom edge of the pull box can fit into the cover opening.

5. All dimensions for the cover for non-traffic pull box are nominal values.

STATE OF CALIFORNIA
DEPARTMENT OF TRANSPORTATION

ELECTRICAL SYSTEMS (NON-TRAFFIC PULL BOX)

NO SCALE

RSP ES-8A DATED JULY 19, 2013 SUPERSEDES RSP ES-8A DATED JANUARY 20, 2012 THAT SUPPLEMENTS THE STANDARD PLANS BOOK DATED 2010.

REVISED STANDARD PLAN RSP ES-8A

2010 REVISED STANDARD PLAN RSP ES-8A

7-15-13

Dist	COUNTY	ROUTE	POST MILES TOTAL PROJECT	SHEET No.	TOTAL SHEETS
03	But	70	24.0/24.5	107	123

Theresa Gabriel
REGISTERED ELECTRICAL ENGINEER

July 19, 2013
PLANS APPROVAL DATE

REGISTERED PROFESSIONAL ENGINEER
Theresa Aziz Gabriel
No. E15129
Exp. 6-30-14
ELECTRICAL
STATE OF CALIFORNIA

THE STATE OF CALIFORNIA OR ITS OFFICERS OR AGENTS SHALL NOT BE RESPONSIBLE FOR THE ACCURACY OR COMPLETENESS OF SCANNED COPIES OF THIS PLAN SHEET.

TO ACCOMPANY PLANS DATED 8-11-14

ISOFOOTCANDLE CURVE - MINIMUM

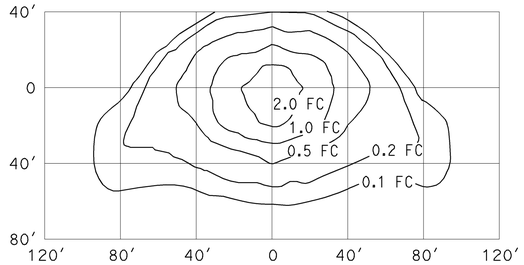

TYPE III MEDIUM CUTOFF

Cutoff Luminaire
34′ Mounting Height
Lamp operated at 22,000 lm
200-W high pressure sodium lamp
ANSI Designation S66

ISOFOOTCANDLE CURVE - MINIMUM

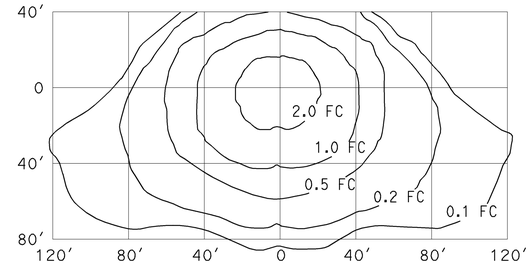

TYPE III MEDIUM CUTOFF

Cutoff Luminaire
40′ Mounting Height
Lamp operated at 37,000 lm
310-W high pressure sodium lamp
ANSI Designation S67

ISOFOOTCANDLE CURVE - MINIMUM

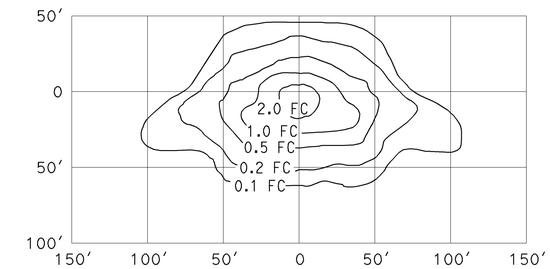

TYPE III MEDIUM CUTOFF

Cutoff Luminaire
30′ Mounting Height
Lamp operated at 16,000 lm
150-W high pressure sodium lamp
ANSI Designation S55

ISOFOOTCANDLE CURVE - MINIMUM

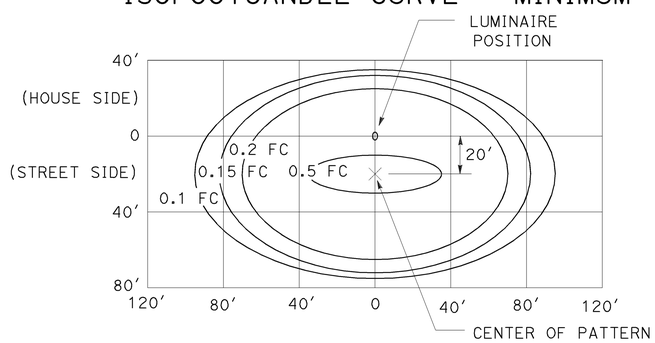

LED LUMINAIRE ROADWAY 1

165-W at 34′ Mounting Height

ISOFOOTCANDLE CURVE - MINIMUM

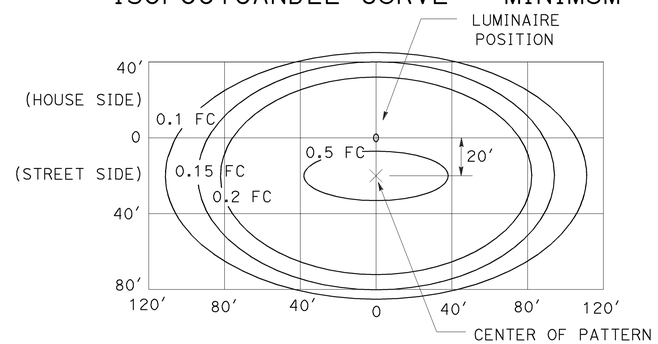

LED LUMINAIRE ROADWAY 2

235-W at 40′ Mounting Height

ISOFOOTCANDLE CURVE - MINIMUM

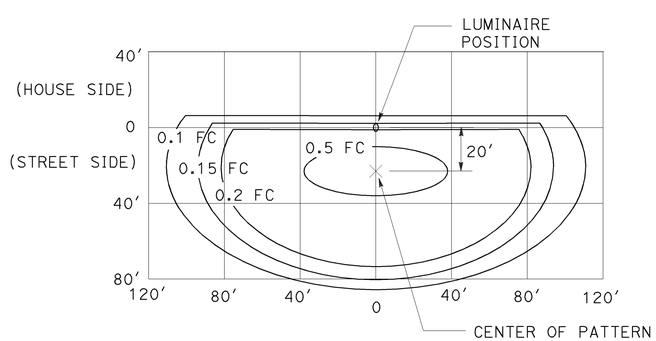

LED LUMINAIRE ROADWAY 3

235-W at 40′ Mounting Height
with back side control

ISOFOOTCANDLE CURVE - MINIMUM

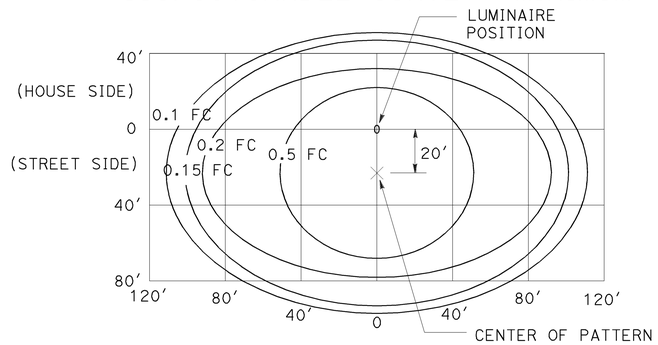

LED LUMINAIRE ROADWAY 4

300-W at 40′ Mounting Height

ISOFOOTCANDLE CURVE - MINIMUM

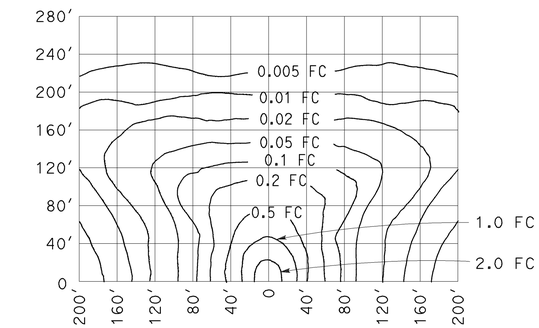

LOW PRESSURE SODIUM LUMINAIRE

40′ Mounting Height
Lamp operated at 33,000 lm
180-W low pressure sodium lamp

STATE OF CALIFORNIA
DEPARTMENT OF TRANSPORTATION

ELECTRICAL SYSTEMS (ISOFOOTCANDLE DIAGRAMS)

NO SCALE

RSP ES-10A DATED JULY 19, 2013 SUPERSEDES RSP ES-10A DATED JULY 20, 2012 THAT SUPPLEMENTS THE STANDARD PLANS BOOK DATED 2010.

REVISED STANDARD PLAN RSP ES-10A

2010 REVISED STANDARD PLAN RSP ES-10A

7-9-13

DIST	COUNTY	ROUTE	POST MILES TOTAL PROJECT	SHEET No.	TOTAL SHEETS
03	But	70	24.0/24.5	108	123

REGISTERED CIVIL ENGINEER 5-22-14 DATE

8-11-14
PLANS APPROVAL DATE

REGISTERED PROFESSIONAL ENGINEER Daniel Sessions No. 77723 Exp. 6-30-15 CIVIL STATE OF CALIFORNIA

The State of California or its officers or agents shall not be responsible for the accuracy or completeness of scanned copies of this plan sheet.

LEGEND:

Indicates Existing Structure to be Removed

Indicates Temporary Detour Bridge

NOTES:

1. Paint "Bridge No. 12-0204"
2. Paint "Flag Canyon Creek Bridge"
3. Access Path, see "ROAD PLANS".

* For hydrologic summary, see "FOUNDATION PLAN" sheet.

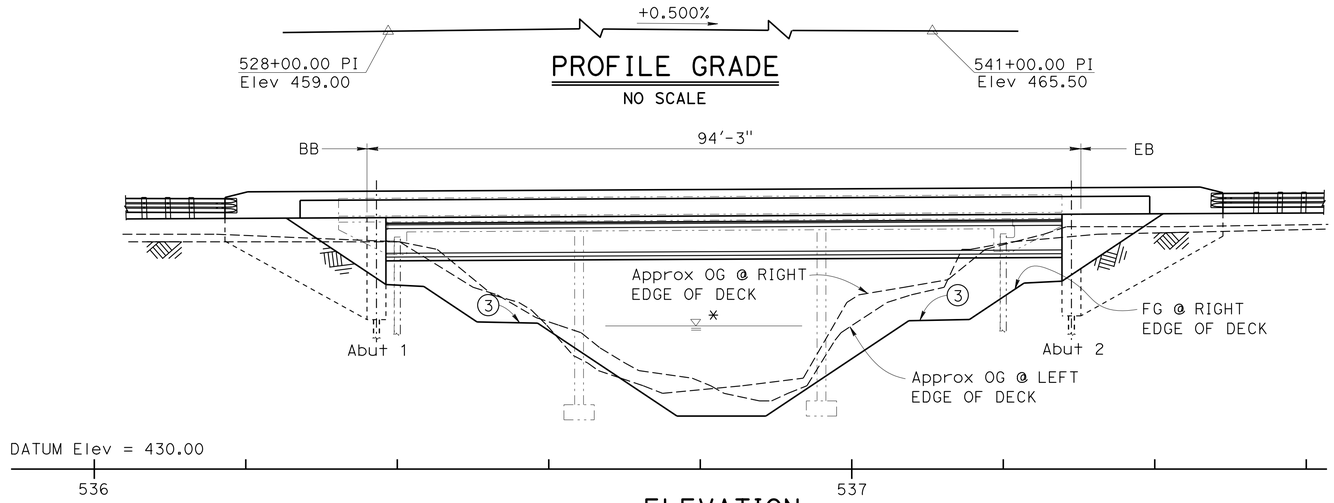

PROFILE GRADE
NO SCALE

ELEVATION
1" = 10'

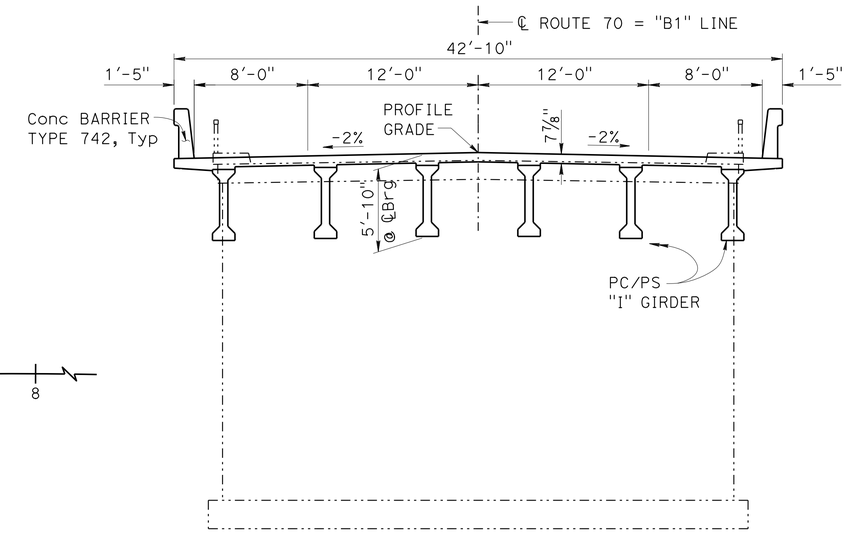

TYPICAL SECTION
3/16" = 1'-0"

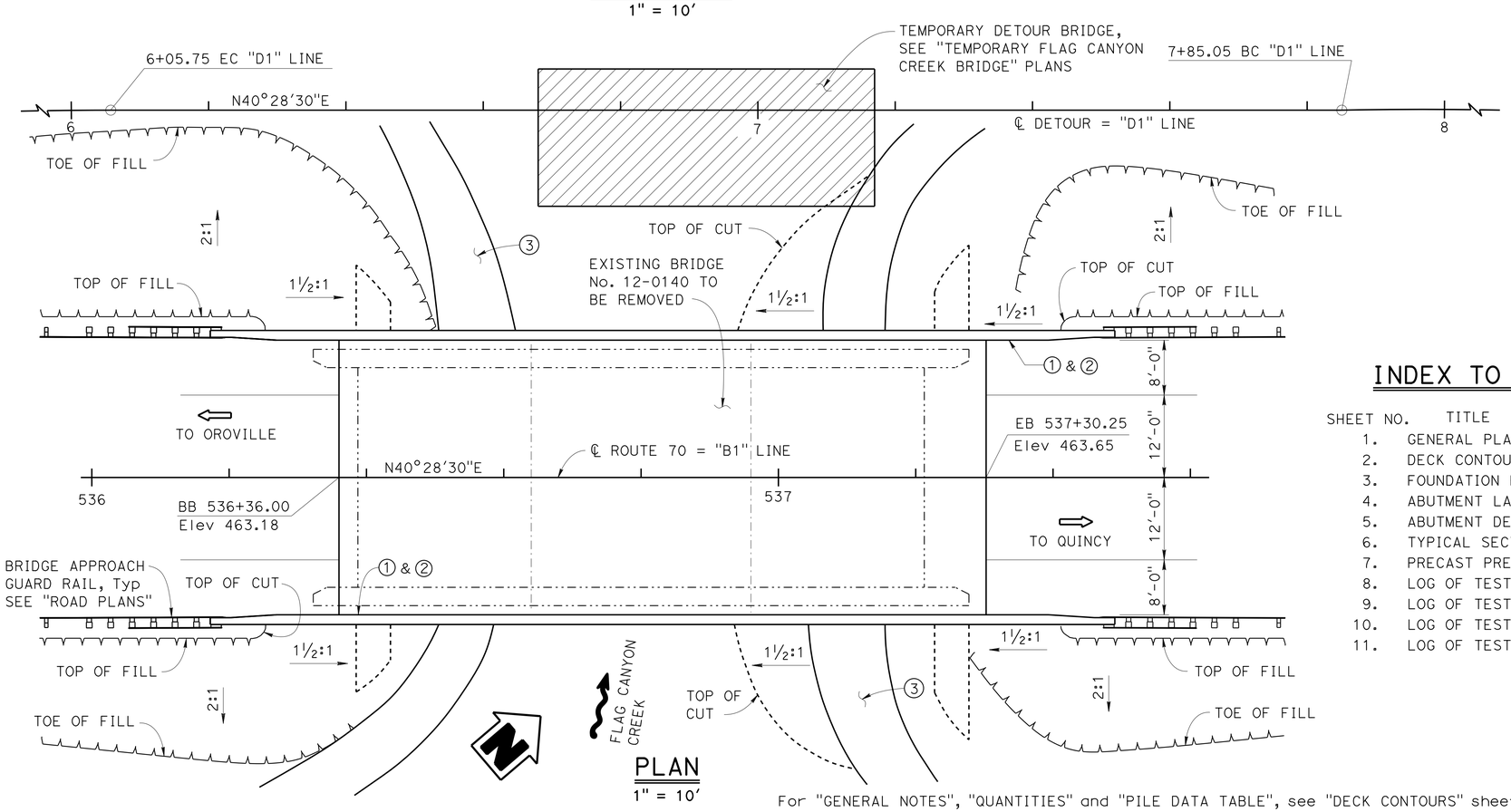

PLAN
1" = 10'

For "GENERAL NOTES", "QUANTITIES" and "PILE DATA TABLE", see "DECK CONTOURS" sheet.

INDEX TO PLANS

SHEET NO.	TITLE
1.	GENERAL PLAN
2.	DECK CONTOURS
3.	FOUNDATION PLAN
4.	ABUTMENT LAYOUT
5.	ABUTMENT DETAILS
6.	TYPICAL SECTION
7.	PRECAST PRESTRESSED I GIRDER
8.	LOG OF TEST BORINGS 1 OF 4
9.	LOG OF TEST BORINGS 2 OF 4
10.	LOG OF TEST BORINGS 3 OF 4
11.	LOG OF TEST BORINGS 4 OF 4

STANDARD PLANS DATED MAY 2010

A10A	ABBREVIATIONS (SHEET 1 OF 2)
RSP A10B	ABBREVIATIONS (SHEET 2 OF 2)
A10C	LINES AND SYMBOLS (SHEET 1 OF 3)
A10D	LINES AND SYMBOLS (SHEET 2 OF 3)
A10E	LINES AND SYMBOLS (SHEET 3 OF 3)
A10F	LEGEND - SOIL (SHEET 1 OF 2)
A10G	LEGEND - SOIL (SHEET 2 OF 2)
A10H	LEGEND - ROCK
A62C	LIMITS OF PAYMENT FOR EXCAVATION AND BACKFILL BRIDGE
B0-1	BRIDGE DETAILS
B0-3	BRIDGE DETAILS
B0-5	BRIDGE DETAILS
RSP B11-57	CONCRETE BARRIER TYPE 742

STANDARD PLAN SHEET NO.

DETAIL NO.

Jeff Sims
DESIGN ENGINEER

	BY	CHECKED
DESIGN	Daniel Sessions	Kevin Harper
DETAILS	Jie Tang	Kevin Harper
QUANTITIES	Bob Huddleston	Jin Zhou

LOAD & RESISTANCE FACTOR DESIGN — LIVE LOADING: HL93 AND PERMIT DESIGN VEHICLE

	BY	CHECKED
LAYOUT	Daniel Sessions	Kevin Harper
SPECIFICATIONS	Elaheh Mansoubi	PLANS AND SPECS COMPARED Elaheh Mansoubi

ORIGINAL SCALE IN INCHES FOR REDUCED PLANS 0 1 2 3

STATE OF CALIFORNIA
DEPARTMENT OF TRANSPORTATION

DIVISION OF ENGINEERING SERVICES
STRUCTURE DESIGN
DESIGN BRANCH 1

UNIT: 3576
PROJECT NUMBER & PHASE: 03000001001
CONTRACT NO.: 03-0F6904

BRIDGE NO. 12-0204
POST MILE 24.26

FLAG CANYON CREEK BRIDGE (REPLACE)
GENERAL PLAN

DISREGARD PRINTS BEARING EARLIER REVISION DATES

REVISION DATES 01/23/13 12/13/14 05/14/14

SHEET 1 OF 11

USERNAME => s119538 DATE PLOTTED => 22-OCT-2014 TIME PLOTTED => 10:42

FILE => 03-0f6904_a-gp.dgn

STRUCTURES DESIGN GENERAL PLAN SHEET (ENGLISH) (REV.09-01-10)

DIST	COUNTY	ROUTE	POST MILES TOTAL PROJECT	SHEET No.	TOTAL SHEETS
03	But	70	24.0/24.5	109	123

REGISTERED CIVIL ENGINEER 5-22-14 DATE

8-11-14
PLANS APPROVAL DATE

REGISTERED PROFESSIONAL ENGINEER Daniel Sessions No. 77723 Exp. 6-30-15 CIVIL STATE OF CALIFORNIA

The State of California or its officers or agents shall not be responsible for the accuracy or completeness of electronic copies of this plan sheet.

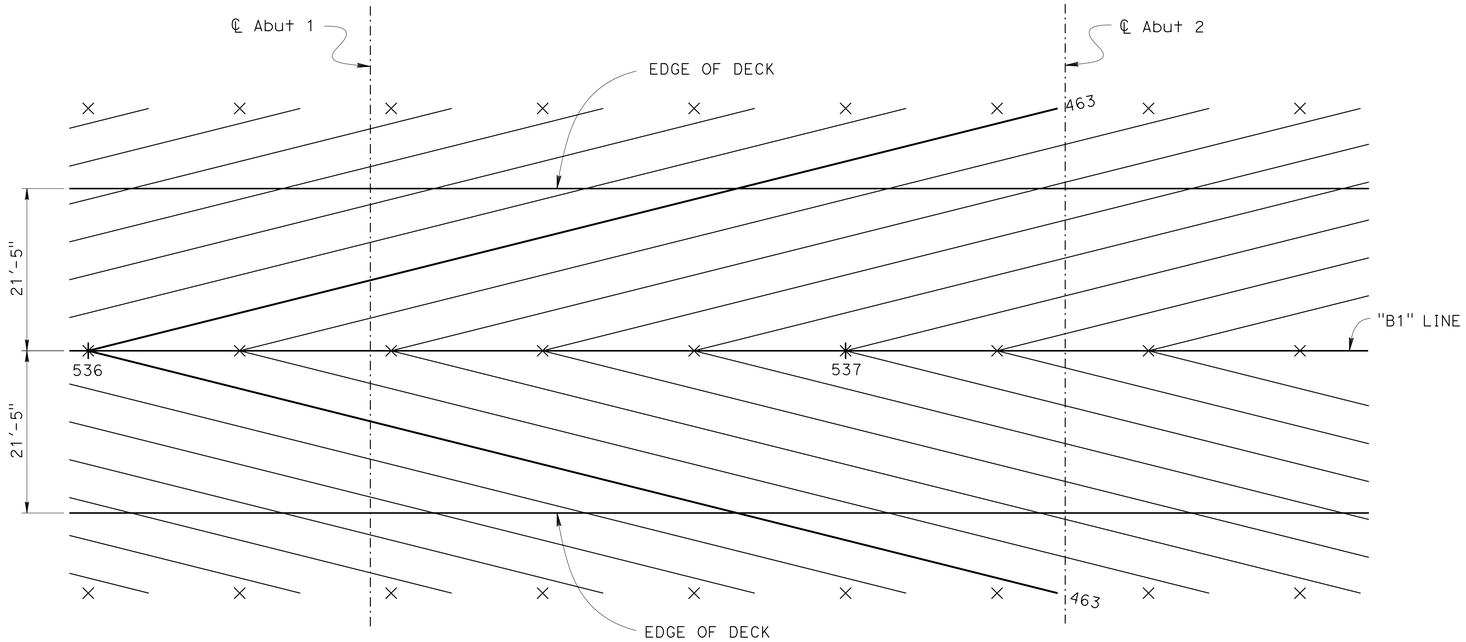

NOTES:

1. Contours do not include camber.
2. Contour interval = 0.10'

× - Indicates 20' Intervals along station line.

DECK CONTOURS

1" = 10'

QUANTITIES

BRIDGE REMOVAL	LUMP	SUM
STRUCTURE EXCAVATION (BRIDGE)	255	CY
STRUCTURE BACKFILL (BRIDGE)	98	CY
FURNISH STEEL PILING (HP 14 X 117)	460	LF
DRIVE STEEL PILE (HP 14 X 117)	14	EA
STRUCTURAL CONCRETE, BRIDGE	239	CY
FURNISH PRECAST PRESTRESSED CONCRETE GIRDER (90'-100')	6	EA
ERECT PRECAST PRESTRESSED CONCRETE GIRDER	6	EA
BAR REINFORCING STEEL (BRIDGE)	14,040	LB
BAR REINFORCING STEEL (EPOXY COATED)(BRIDGE)	31,955	LB
CONCRETE BARRIER (TYPE 742)	264	LF

GENERAL NOTES
LOAD AND RESISTANCE FACTOR DESIGN

DESIGN: AASHTO LRFD Bridge Design Specifications, Fourth Edition and the California Amendments preface dated November 2011

DEAD LOAD: Includes 35 psf for future wearing surface

LIVE LOADING: HL 93 and permit design vehicle

REINFORCED CONCRETE: f_y = 60 ksi, n = 8
f'_c = 3.6 ksi

PRESTRESSED CONCRETE: See "PRECAST PRESTRESSED I GIRDER" sheet

STRUCTURAL STEEL: Abutment piles ASTM A709 Grade 50

PILE DATA TABLE

LOCATION	PILE TYPE	DESIGN LOAD (SERVICE) (kips)	NOMINAL RESISTANCE COMPRESSION (kips)	NOMINAL RESISTANCE TENSION (kips)	DESIGN TIP ELEVATION	SPECIFIED TIP ELEVATION	NOMINAL DRIVING RESISTANCE (kips)
Abut 1	HP 14X117	140	280	0	417.0 ① 432.0 ②	417.0	280
Abut 2	HP 14X117	140	280	0	417.0 ① 431.0 ②	417.0	280

NOTE: Design tip elevations are controlled by: ① Compression, ② Lateral.

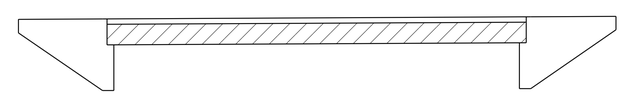

Precast prestressed I Girder (See "PRECAST PRESTRESSED I GIRDER" sheet)

Structural Concrete, Bridge

CONCRETE STRENGTH AND TYPE LIMITS

NO SCALE

	BY	CHECKED
DESIGN	Daniel Sessions	Kevin Harper
DETAILS	Jie Tang	Kevin Harper
QUANTITIES	Bob Huddleston	Jin Zhou

STATE OF CALIFORNIA
DEPARTMENT OF TRANSPORTATION

DIVISION OF ENGINEERING SERVICES
STRUCTURE DESIGN
DESIGN BRANCH 1

BRIDGE NO. 12-0204
POST MILE 24.26

FLAG CANYON CREEK BRIDGE (REPLACE)
DECK CONTOURS

STRUCTURES DESIGN DETAIL SHEET (ENGLISH) (REV. 09-01-10)

ORIGINAL SCALE IN INCHES FOR REDUCED PLANS 0 1 2 3

UNIT: 3576
PROJECT NUMBER & PHASE: 03000001001 CONTRACT NO.: 03-0F6904

DISREGARD PRINTS BEARING EARLIER REVISION DATES

REVISION DATES 04/29/13 12/12/13 03/13/14

SHEET 2 OF 11

FILE => 03-0f6904_b-dc.dgn

USERNAME => s119938 DATE PLOTTED => 22-OCT-2014 TIME PLOTTED => 10:42

DIST	COUNTY	ROUTE	POST MILES TOTAL PROJECT	SHEET No.	TOTAL SHEETS
03	But	70	24.0/24.5	110	123

REGISTERED CIVIL ENGINEER 5-22-14 DATE

8-11-14
PLANS APPROVAL DATE

REGISTERED PROFESSIONAL ENGINEER
Daniel Sessions
No. 77723
Exp. 6-30-15
CIVIL
STATE OF CALIFORNIA

The State of California or its officers or agents shall not be responsible for the accuracy or completeness of electronic copies of this plan sheet.

CURVE DATA

No.	R	Δ	T	L
Ⓐ	600.00′	9°30′00″	49.86′	99.48′
Ⓑ	600.00′	9°30′00″	49.86′	99.48′

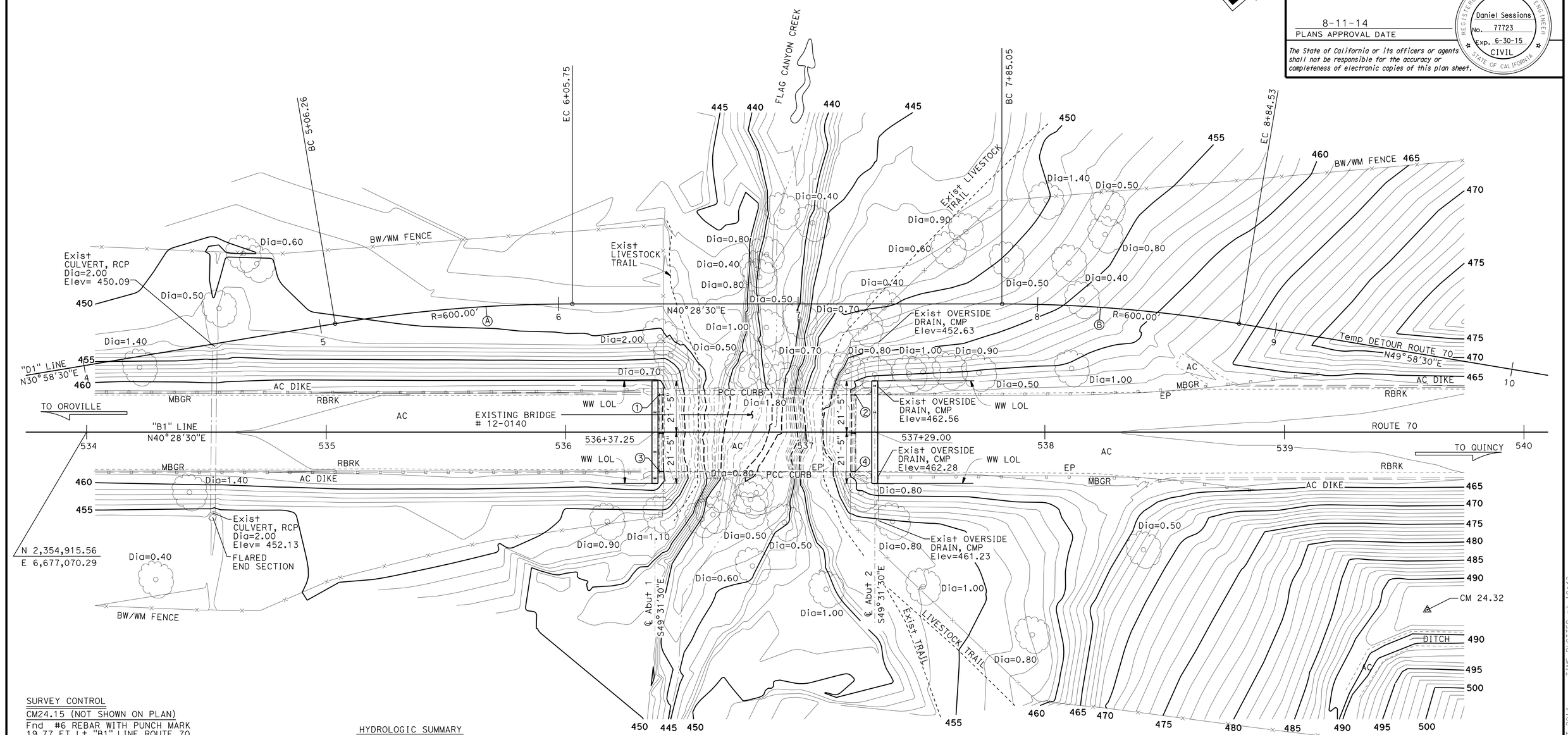

SURVEY CONTROL

CM24.15 (NOT SHOWN ON PLAN)
Fnd #6 REBAR WITH PUNCH MARK
19.77 FT Lt "B1" LINE ROUTE 70
Sta 529+82.58
N 2,354,610.87
E 6,676,784.30
Elev. = 458.01

CM24.32
Fnd 2" BRASS DISK
74.18 FT Rt "B1" LINE ROUTE 70
Sta 539+59.64
N 2,355,293.12
E 6,677,489.99
Elev. = 492.81

HYDROLOGIC SUMMARY

DRAINAGE AREA: 2.6 SQUARE MILES

	DESIGN FLOOD	BASE FLOOD	OVERTOPPING FLOOD
FREQUENCY (YEARS)	50	100	N/A
DISCHARGE (CUBIC FEET PER SECOND)	1590	2020	N/A
WATER SURFACE (Elev AT BRIDGE)	447.8	448.7	N/A

FLOOD PLAIN DATA ARE BASED UPON INFORMATION AVAILABLE WHEN THE PLANS WERE PREPARED AND ARE SHOWN TO MEET FEDERAL REQUIREMENTS. THE ACCURACY OF SAID INFORMATION IS NOT WARRANTED BY THE STATE AND INTERESTED OR AFFECTED PARTIES SHOULD MAKE THEIR OWN INVESTIGATIONS.

Bridge Location
① - 15.50 Lt "B1" LINE, Sta 536+38.93, Elev = 462.64±
② - 15.47 Lt "B1" LINE, Sta 537+21.14, Elev = 463.13±
③ - 16.36 Rt "B1" LINE, Sta 536+39.21, Elev = 462.63±
④ - 16.44 Rt "B1" LINE, Sta 537+21.06, Elev = 463.06±

PRELIMINARY INVESTIGATION SECTION

SCALE 1"=20′	VERT.DATUM NAVD88	PHOTOGRAMMETRY AS OF: X			
	HORZ.DATUM NAD83 (2004.69)	SURVEYED	BY DISTRICT	CHECKED	BY J. BORDEN 05/2013
ALIGNMENT TIES Dist TRAVERSE SHEET		DRAFTED	BY T. ZOLNIKOV 05/2013	CHECKED	BY L. LEW 05/2013

	BY	CHECKED
DESIGN	Daniel Sessions	Kevin Harper
DETAILS	B. Huddleston/ J. Tang	Kevin Harper
QUANTITIES	Bob Huddleston	Jin Zhou

STATE OF CALIFORNIA
DEPARTMENT OF TRANSPORTATION

DIVISION OF ENGINEERING SERVICES
STRUCTURE DESIGN
DESIGN BRANCH 1

BRIDGE NO. 12-0204
POST MILE 24.26

FLAG CANYON CREEK BRIDGE (REPLACE)
FOUNDATION PLAN

STRUCTURES FOUNDATION PLAN SHEET (ENGLISH) (REV. 09-01-10)

ORIGINAL SCALE IN INCHES FOR REDUCED PLANS 0 1 2 3

UNIT: 3646
PROJECT NUMBER & PHASE: 03000001001 CONTRACT NO.: 03-0F6904

DISREGARD PRINTS BEARING EARLIER REVISION DATES

REVISION DATES 05/31/13 08/29/13 12/18/13

SHEET 3 OF 11

FILE => 03-0f6904_c-fp.dgn

USERNAME => s119538 DATE PLOTTED => 22-OCT-2014 TIME PLOTTED => 10:42

DIST	COUNTY	ROUTE	POST MILES TOTAL PROJECT	SHEET No.	TOTAL SHEETS
03	But	70	24.0/24.5	111	123

REGISTERED CIVIL ENGINEER 5-22-14 DATE

8-11-14
PLANS APPROVAL DATE

REGISTERED PROFESSIONAL ENGINEER Daniel Sessions No. 77723 Exp. 6-30-15 CIVIL STATE OF CALIFORNIA

The State of California or its officers or agents shall not be responsible for the accuracy or completeness of electronic copies of this plan sheet.

NOTES:

1. Backfill shall be placed simultaneously behind and in front of each abutment up to the level of finished grade at the front face of abutment. Adequate bracing shall be provided to prevent any movement of the abutment. The remaining backfill shall be placed behind both abutments after completion of the deck. During the backfill operation, the difference in fill height between each abutment shall not vary by more than 2'-0".
2. For "SECTION B-B", "DETAIL X", "STEEL PILE ANCHOR" detail and "WEEP HOLE AND GEOCOMPOSITE DRAIN" alternative, see "ABUTMENT DETAILS" sheet.

* Indicates epoxy-coated reinforcement

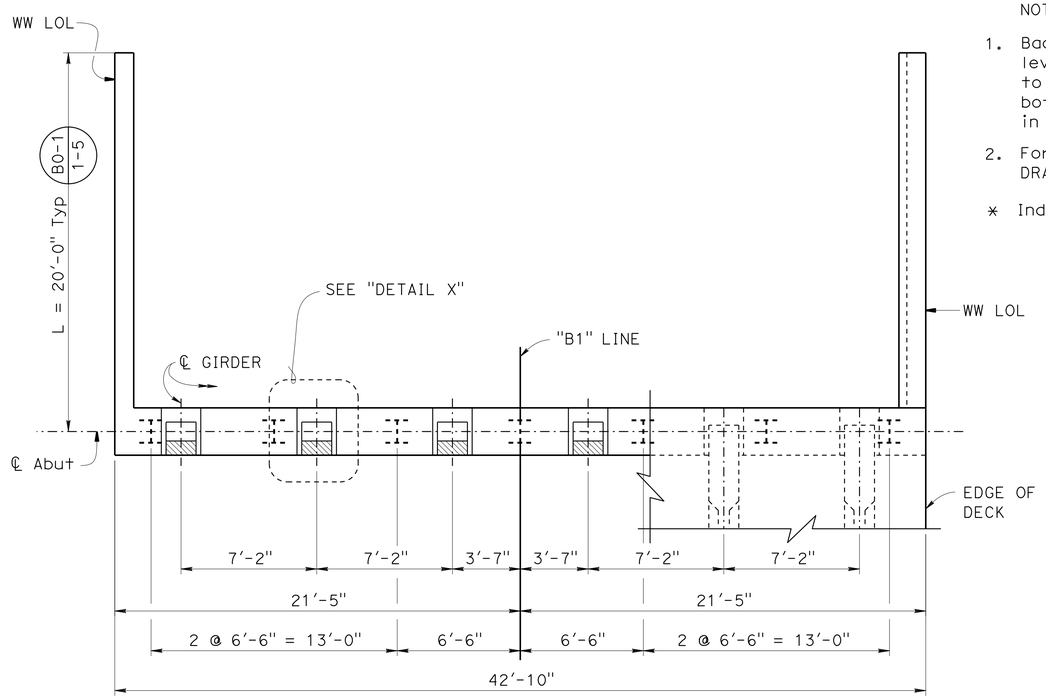

PLAN
1/4" = 1'-0"

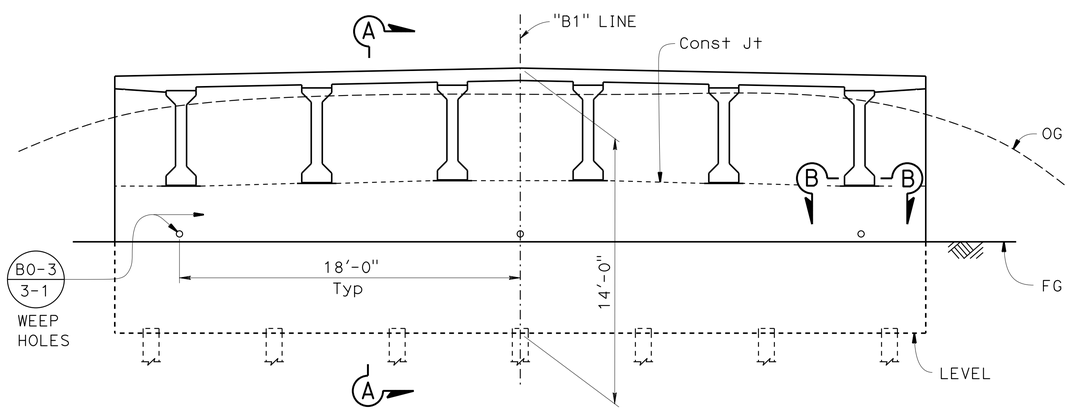

ELEVATION
1/4" = 1'-0"

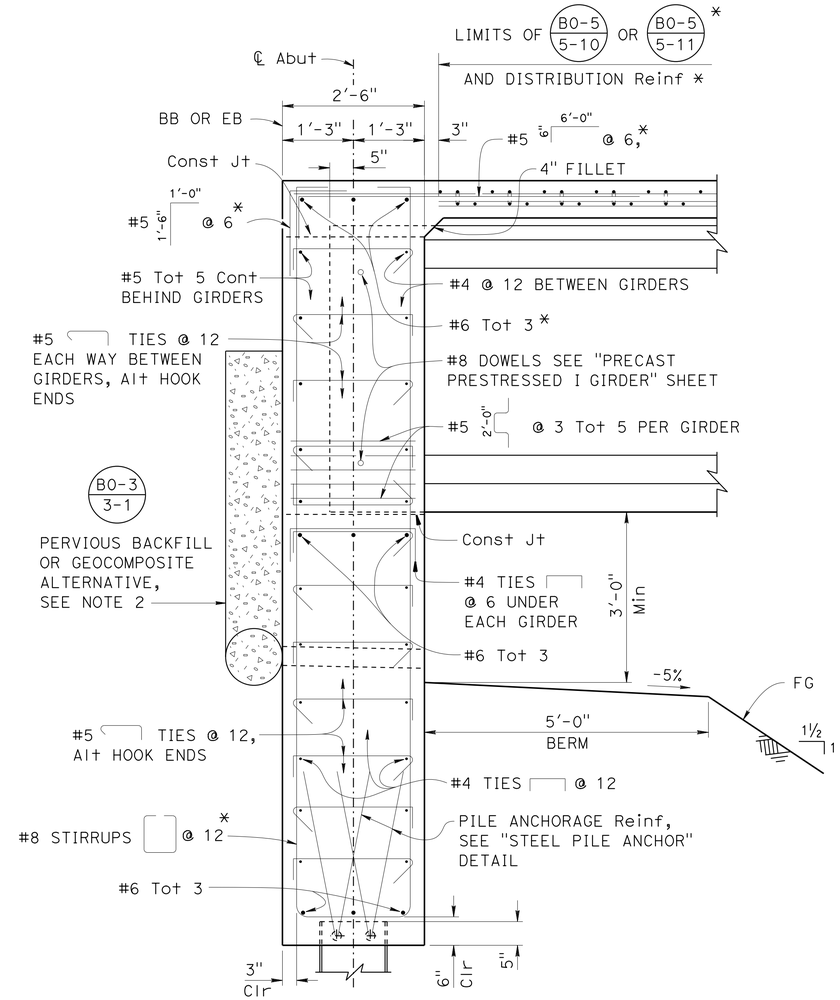

SECTION A-A
3/4" = 1'-0"

DESIGN	BY Daniel Sessions	CHECKED Kevin Harper	
DETAILS	BY Jie Tang	CHECKED Kevin Harper	
QUANTITIES	BY Bob Huddleston	CHECKED Jin Zhou	

STATE OF CALIFORNIA
DEPARTMENT OF TRANSPORTATION

DIVISION OF ENGINEERING SERVICES
STRUCTURE DESIGN
DESIGN BRANCH 1

BRIDGE NO. 12-0204
POST MILE 24.26

FLAG CANYON CREEK BRIDGE (REPLACE)
ABUTMENT LAYOUT

STRUCTURES DESIGN DETAIL SHEET (ENGLISH) (REV. 09-01-10)

ORIGINAL SCALE IN INCHES FOR REDUCED PLANS 0 1 2 3

UNIT: 3576
PROJECT NUMBER & PHASE: 03000001001
CONTRACT NO.: 03-0F6904

DISREGARD PRINTS BEARING EARLIER REVISION DATES

REVISION DATES 05/24/13 12/27/13 12-19-13

SHEET 4 OF 11

FILE => 03-0f6904_e-abutlyt.dgn

USERNAME => s119538 DATE PLOTTED => 22-OCT-2014 TIME PLOTTED => 10:42

DIST	COUNTY	ROUTE	POST MILES TOTAL PROJECT	SHEET No.	TOTAL SHEETS
03	But	70	24.0/24.5	112	123

REGISTERED CIVIL ENGINEER 5-22-14 DATE

8-11-14
PLANS APPROVAL DATE

REGISTERED PROFESSIONAL ENGINEER Daniel Sessions No. 77723 Exp. 6-30-15 CIVIL STATE OF CALIFORNIA

The State of California or its officers or agents shall not be responsible for the accuracy or completeness of electronic copies of this plan sheet.

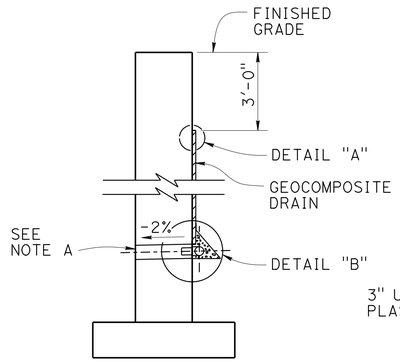

ABUTMENT SECTION

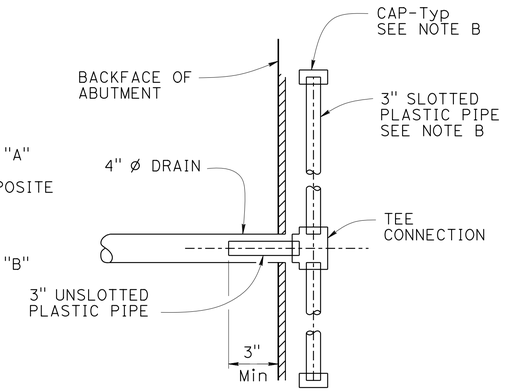

SECTION A-A

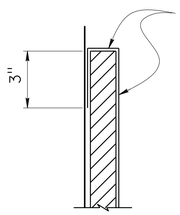

DETAIL "A"

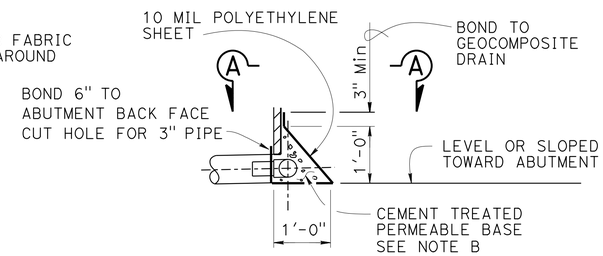

DETAIL "B"

WEEP HOLE AND GEOCOMPOSITE DRAIN

NO SCALE

ALTERNATIVE TO BRIDGE DETAIL B0-3 / 3-1

NOTES:

A. 4" ø drains at 25' Max center to center as shown on the abutment "ELEVATION" on the "ABUTMENT LAYOUT" sheet. Exposed wall drains shall be located 3" ± above finished grade.

B. Geocomposite drain, cement treated permeable base, and 3" ø slotted plastic pipe continuous behind abutment. Cap ends of pipe. Provide "Tee" connection at each 4" ø drain.

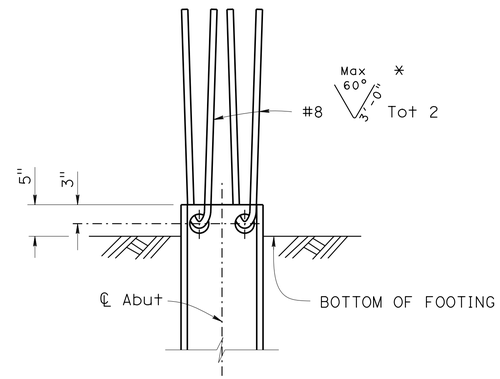

ELEVATION

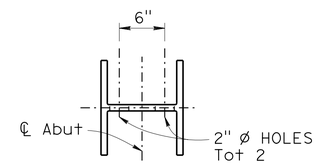

PLAN

STEEL PILE ANCHOR

NO SCALE

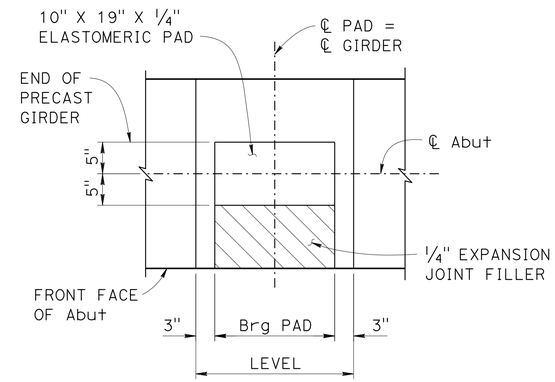

DETAIL X

1" = 1'-0"

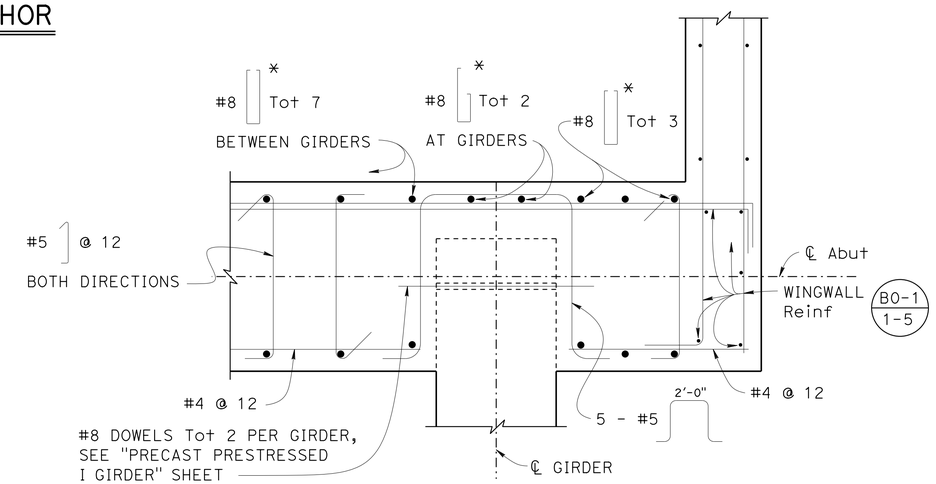

SECTION B-B

1" = 1'-0"

NOTES:

For location of "SECTION B-B" and "DETAIL X", see "ABUTMENT LAYOUT" sheet.

* - Indicates epoxy-coated reinforcement

	BY	CHECKED
DESIGN	Daniel Sessions	Kevin Harper
DETAILS	Jie Tang	Kevin Harper
QUANTITIES	Bob Huddleston	Jin Zhou

STATE OF CALIFORNIA
DEPARTMENT OF TRANSPORTATION

DIVISION OF ENGINEERING SERVICES
STRUCTURE DESIGN
DESIGN BRANCH 1

BRIDGE NO. 12-0204
POST MILE 24.26

FLAG CANYON CREEK BRIDGE (REPLACE)
ABUTMENT DETAILS

STRUCTURES DESIGN DETAIL SHEET (ENGLISH) (REV. 09-01-10)

ORIGINAL SCALE IN INCHES FOR REDUCED PLANS 0 1 2 3

UNIT: 3576
PROJECT NUMBER & PHASE: 03000001001
CONTRACT NO.: 03-0F6904

DISREGARD PRINTS BEARING EARLIER REVISION DATES

REVISION DATES 06/04/13 05/14/14 12/23/13

SHEET 5 OF 11

FILE => 03-0f6904_f-abutdet.dgn

USERNAME => s119538 DATE PLOTTED => 22-OCT-2014 TIME PLOTTED => 10:42

DIST	COUNTY	ROUTE	POST MILES TOTAL PROJECT	SHEET No.	TOTAL SHEETS
03	But	70	24.0/24.5	113	123

REGISTERED CIVIL ENGINEER 5-22-14 DATE

8-11-14
PLANS APPROVAL DATE

REGISTERED PROFESSIONAL ENGINEER
Daniel Sessions
No. 77723
Exp. 6-30-15
CIVIL
STATE OF CALIFORNIA

The State of California or its officers or agents shall not be responsible for the accuracy or completeness of electronic copies of this plan sheet.

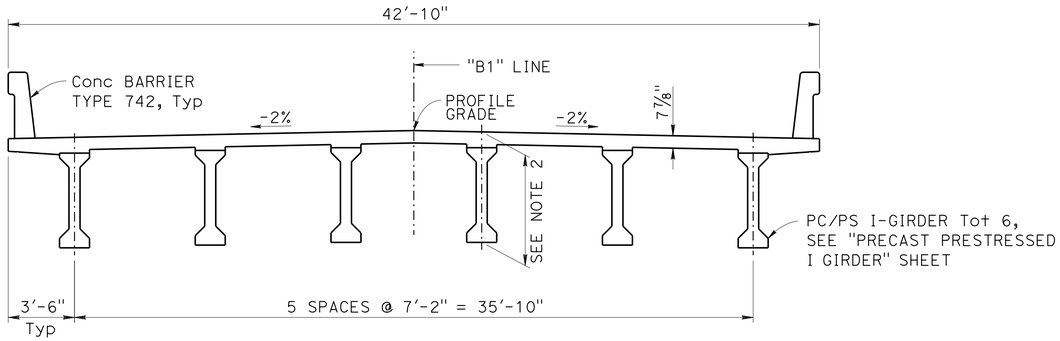

TYPICAL SECTION
1/4" = 1'-0"

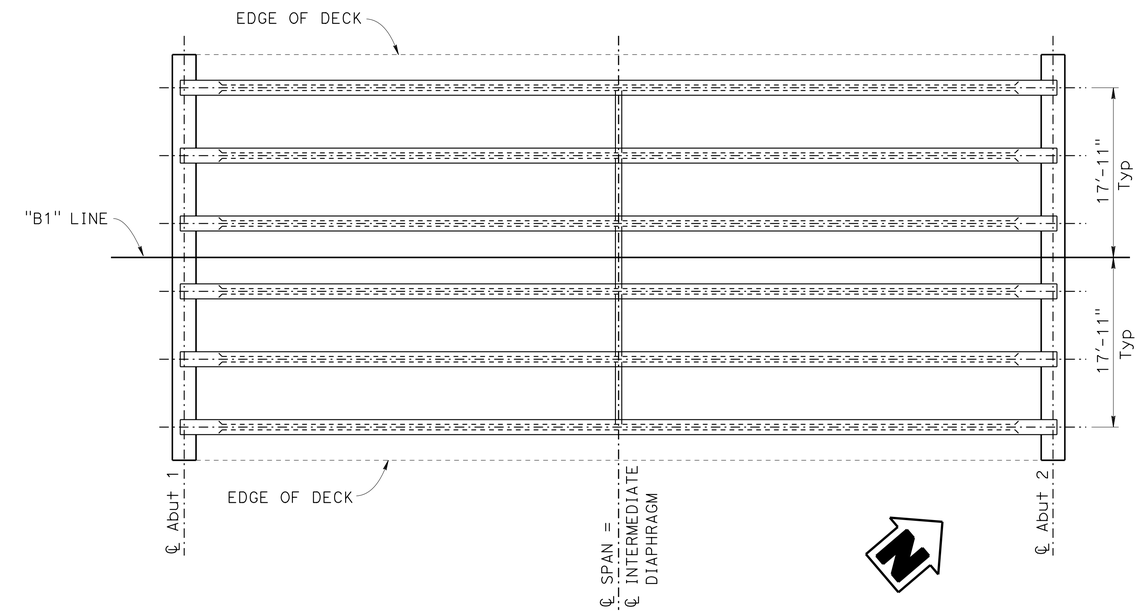

GIRDER LAYOUT
1/8" = 1'-0"

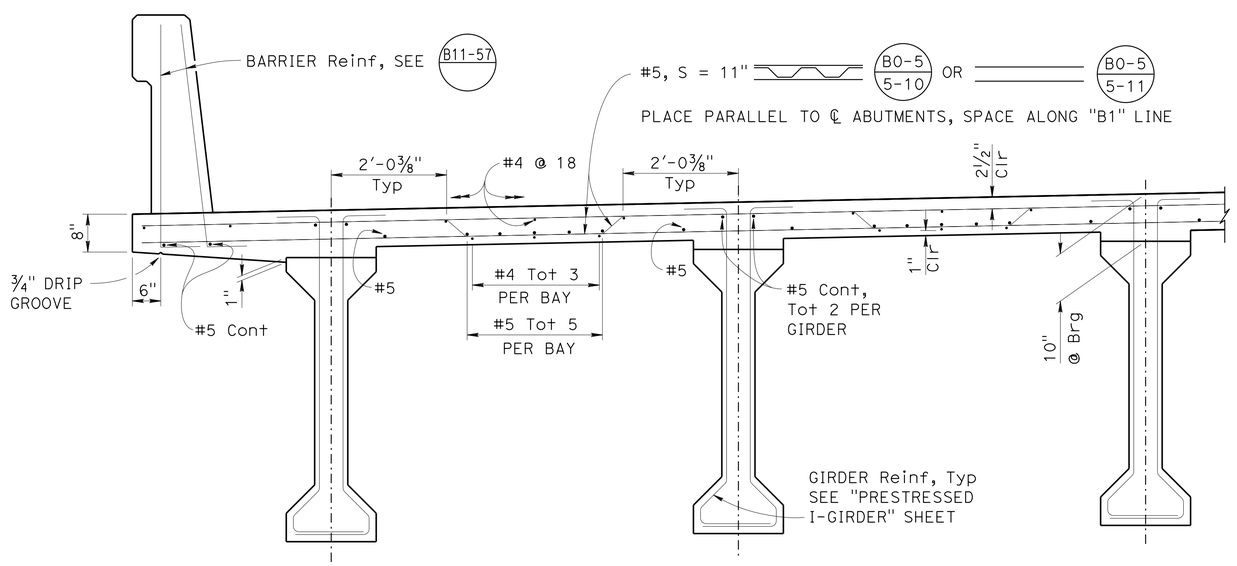

PART TYPICAL SECTION B0-5
3/4" = 1'-0"

NOTES:

1. For girder and intermediate diaphragm details, see "PRECAST PRESTRESSED I GIRDER" sheet.
2. Structure depth at ℄ Brg = 5'-10", Min structure depth at Mid span = 5'-7 7/8".
3. Place girders parallel to "B1" line.
4. All deck, barrier and girder reinforcement shown shall be epoxy coated.

	BY	CHECKED
DESIGN	Daniel Sessions	Kevin Harper
DETAILS	Jie Tang	Kevin Harper
QUANTITIES	Bob Huddleston	Jin Zhou

STATE OF CALIFORNIA
DEPARTMENT OF TRANSPORTATION

DIVISION OF ENGINEERING SERVICES
STRUCTURE DESIGN
DESIGN BRANCH 1

BRIDGE NO. 12-0204
POST MILE 24.26

FLAG CANYON CREEK BRIDGE (REPLACE)
TYPICAL SECTION

STRUCTURES DESIGN DETAIL SHEET (ENGLISH) (REV. 09-01-10)

ORIGINAL SCALE IN INCHES FOR REDUCED PLANS 0 1 2 3

UNIT: 3576
PROJECT NUMBER & PHASE: 03000001001
CONTRACT NO.: 03-0F6904

DISREGARD PRINTS BEARING EARLIER REVISION DATES

REVISION DATES 04/30/13 12/19/13 12/21/13

SHEET 6 OF 11

FILE => 03-0f6904_h-ts.dgn

USERNAME => s119538 DATE PLOTTED => 22-OCT-2014 TIME PLOTTED => 10:42

DIST	COUNTY	ROUTE	POST MILES TOTAL PROJECT	SHEET No.	TOTAL SHEETS
03	But	70	24.0/24.5	114	123

REGISTERED CIVIL ENGINEER 5-22-14 DATE

8-11-14
PLANS APPROVAL DATE

REGISTERED PROFESSIONAL ENGINEER Daniel Sessions No. 77723 Exp. 6-30-15 CIVIL STATE OF CALIFORNIA

The State of California or its officers or agents shall not be responsible for the accuracy or completeness of electronic copies of this plan sheet.

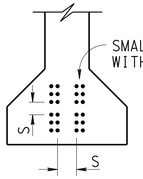

CLEARANCES FOR PRETENSIONED STRANDS

NO SCALE

1. Strands may be bundled in groups consisting of 3 vertically, 2 horizontally and separated at the ends.
2. The Min distance "S" between groups or individual strands is 1½" for ⅜" ø strands, 1¾" for ½" ø strands, 2" for 0.6" ø strands.
3. "S" is measured between centers of adjacent strands.
4. Approval by the Engineer is required for deviation.

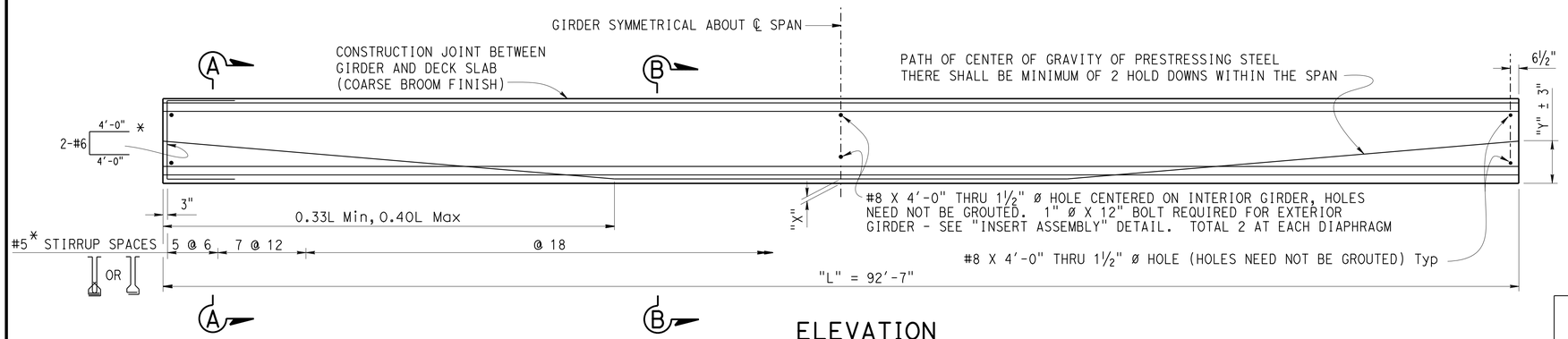

ELEVATION

NO SCALE

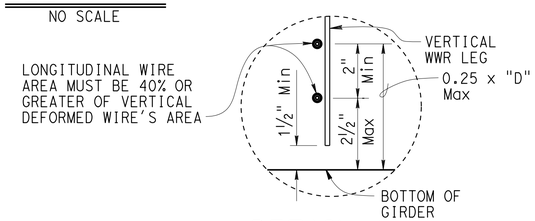

DETAIL A

NO SCALE

GENERAL NOTES

JACKING FORCE (P): The jacking force required at the point of control along the span. The jacking force does not include any fabrication specific losses.

The maximum tensile stress in the prestressing steel upon release shall not exceed 75% of the specified minimum ultimate tensile strength of the prestressing steel.

The maximum temporary tensile stress (jacking stress) in the prestressing steel shall not exceed 80% of the specified minimum ultimate tensile strength of the prestressing steel.

CONCRETE STRENGTH: f'ci is at time of initial stressing
f'c is at 28 days

DEFLECTION COMPONENTS: Informational - to be used in setting screed line elevations

Screed line elevations for deck concrete will be determined by the Engineer.

Contractor may interpolate "P" and "X" values between limits shown, as approved by the Engineer.

* - Indicates epoxy coated reinforcement.

Girder Length, "L"	Jacking Force (P) (Kips) "X"		"Y" (in)	Concrete Strength (ksi) f'ci	Concrete Strength (ksi) f'c	Midspan Dead Load Deflection (feet) Deck	Midspan Dead Load Deflection (feet) Rail
92'-7"	4"	920	27"	5.00	6.30	0.09	0.01
	6"	970					

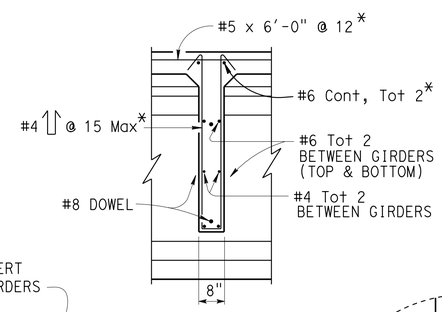

SECTION D-D

NO SCALE

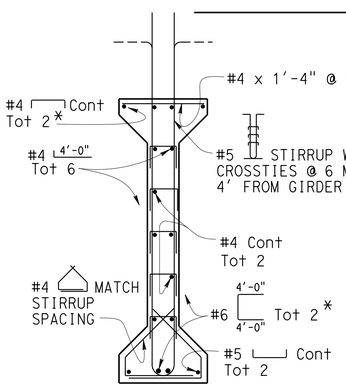

SECTION A-A

NO SCALE

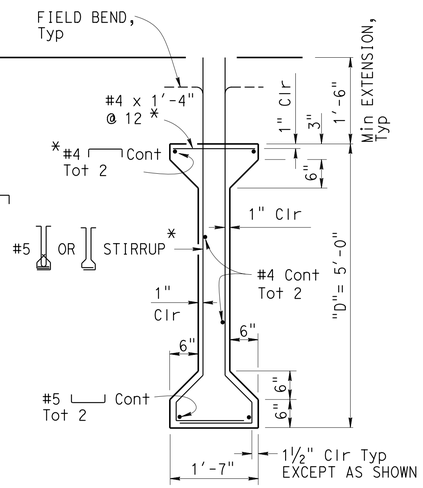

SECTION B-B

NO SCALE

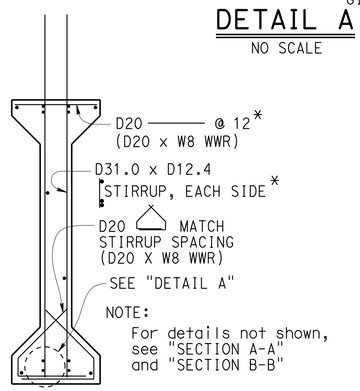

OPTIONAL WELDED WIRE REINFORCEMENT (WWR) DETAIL

NO SCALE

WWR NOTE: MANUFACTURER'S SHOP DRAWING SHALL CONFORM TO THE REINFORCEMENT SHOWN ON THIS SHEET AS NOTED AND THE SPECIAL PROVISIONS

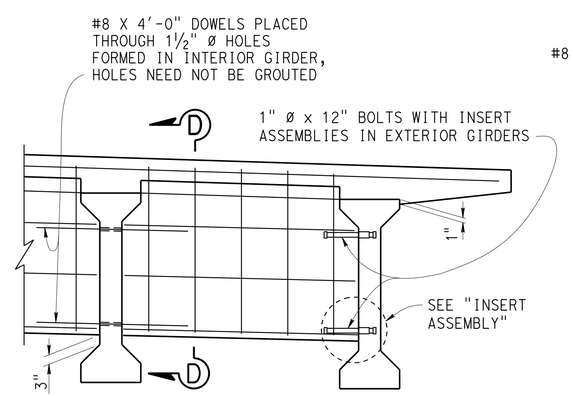

INTERMEDIATE DIAPHRAGM

NO SCALE

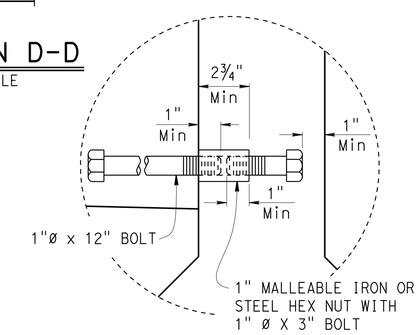

INSERT ASSEMBLY

NO SCALE

DESIGN	BY Daniel Sessions	CHECKED Kevin Harper	
DETAILS	BY Jie Tang	CHECKED Kevin Harper	
QUANTITIES	BY Bob Huddleston	CHECKED Jin Zhou	

STATE OF CALIFORNIA
DEPARTMENT OF TRANSPORTATION

DIVISION OF ENGINEERING SERVICES
STRUCTURE DESIGN
DESIGN BRANCH 1

BRIDGE NO. 12-0204
POST MILE 24.26

FLAG CANYON CREEK BRIDGE (REPLACE)
PRECAST PRESTRESSED I GIRDER

STRUCTURES DESIGN DETAIL SHEET (ENGLISH) (REV. 09-01-10)

ORIGINAL SCALE IN INCHES FOR REDUCED PLANS 0 1 2 3

UNIT: 3576
PROJECT NUMBER & PHASE: 03000001001
CONTRACT NO.: 03-0F6904

DISREGARD PRINTS BEARING EARLIER REVISION DATES

REVISION DATES 05/22/13 12/18/13 12/27/13

SHEET 7 OF 11

FILE => 03-0F6904_v-ppg.dgn

USERNAME => s119938 DATE PLOTTED => 22-OCT-2014 TIME PLOTTED => 10:42

DIST	COUNTY	ROUTE	POST MILES TOTAL PROJECT	SHEET No	TOTAL SHEETS
03	But	70	24.0/24.5	115	123

PROFESSIONAL GEOLOGIST 2-5-14

8-11-14
PLANS APPROVAL DATE

PROFESSIONAL GEOLOGIST Joseph Kaump No. 7837 Exp. 1-31-15 STATE OF CALIFORNIA

The State of California or its officers or agents shall not be responsible for the accuracy or completeness of electronic copies of this plan sheet.

This LOTB sheet was prepared in accordance with the Caltrans Soil & Rock Logging, Classification, & Presentation Manual (2010 Edition).

See 2010 Standard Plans A10F and A10G for Soil Legend, and A10H for Rock Legend.

Note: Refer to boring RC-13-003 for groundwater data.

BENCH MARK

BM SUHV 2428 Elev 462.020

21.38 ft Rt "B1" Line Rte 70
Sta 537+36.78
Vert Datum: NAVD88

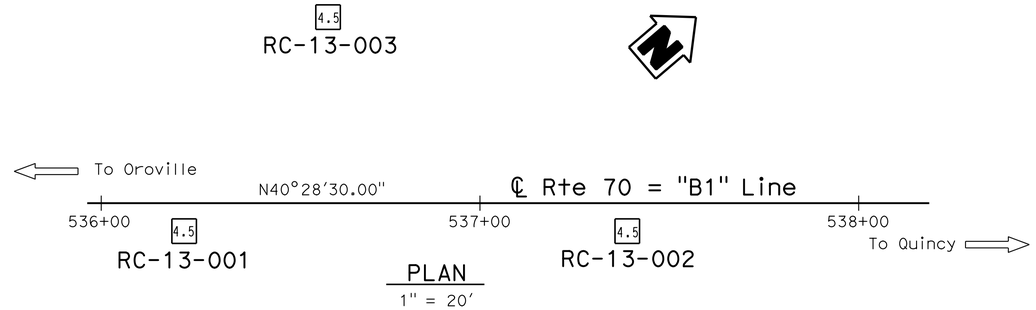

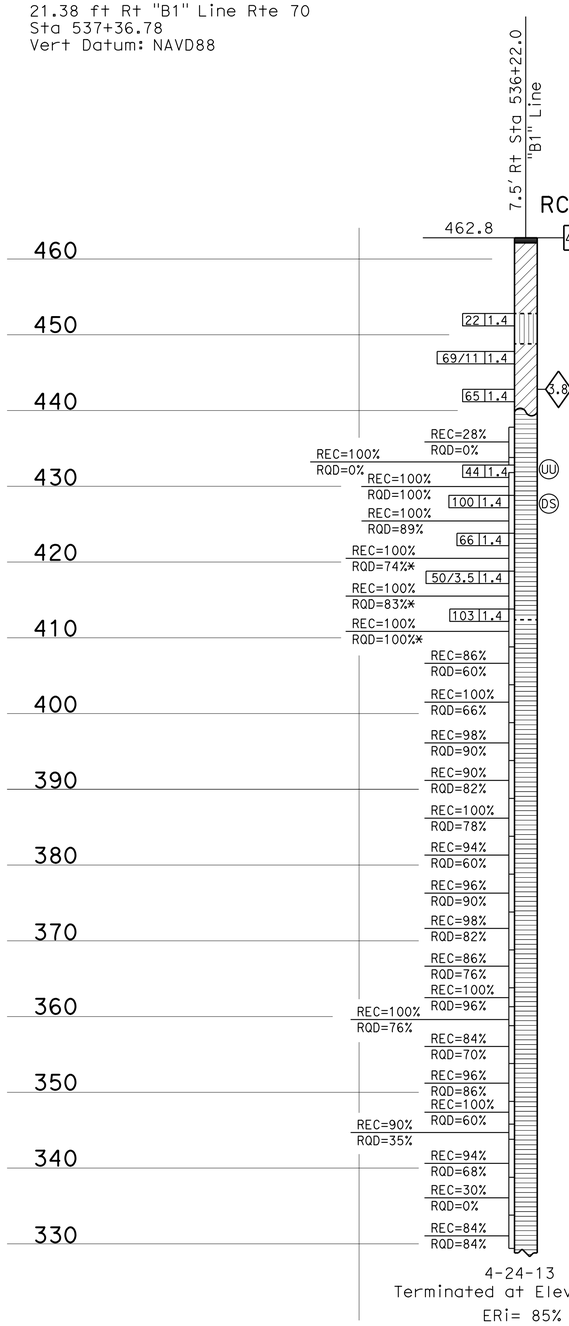

4.5 Asphalt concrete (8").

Lean CLAY with GRAVEL (CL); from stiff to very stiff; light yellowish brown; dry and moist; little fine to coarse GRAVEL; few fine and medium SAND; (FILL).

SANDY SILT (ML); medium dense; yellowish brown; moist; some fine SAND.

Rock fragments with SANDY lean CLAY (CL); very dense; black and yellowish brown; moist; mostly from fine gravel to cobble size subangular and angular rock fragments; (FILL).

SEDIMENTARY ROCK (SANDSTONE); yellowish brown; very intensely weathered; from very soft to soft; little coarse gravel clasts; (SILTY SAND with GRAVEL (SM); very dense; yellowish brown; moist; fine SAND; some fines; little coarse GRAVEL from weak to moderate cementation).
-intensely weathered; (SANDY SILT(ML); hard; moist; few fine SAND; PP> 4.5 tsf).
-PP> 4.5 tsf.

-fossils.
SEDIMENTARY ROCK (SANDSTONE); dark gray; slightly weathered to fresh; moderately soft to moderately hard; slightly fractured to unfractured; abundant shells.
UC= 550 psi.

-hard cobble sized clasts from Elev 396.8' to Elev 395.8'.

-hard cobble sized clasts from Elev 386.4' to Elev 385.8'.

-hard cobble sized clasts from Elev 383.8' to Elev 383.3'.

-trace fine to coarse well-rounded gravel sized clasts.
UC= 294 psi.

-well-rounded gravel and cobble sized clasts from Elev 345.6' to Elev 344.7'.
-thin interbedded CLAYS; fine to coarse well-rounded GRAVEL from Elev 342.8' to Elev 338.8'.

-dark gray; slightly weathered to fresh; from soft to very soft; unfractured.

PROFILE
Horiz: 1" = 10'
Vert: 1" = 10'

ENGINEERING SERVICES	MATERIALS AND GEOTECHNICAL SERVICES	STATE OF CALIFORNIA DEPARTMENT OF TRANSPORTATION	DIVISION OF ENGINEERING SERVICES STRUCTURE DESIGN DESIGN BRANCH 1	BRIDGE NO. 12-0204 POST MILE 24.26	FLAG CANYON CREEK BRIDGE (REPLACE) LOG OF TEST BORINGS 1 OF 4
FUNCTIONAL SUPERVISOR NAME: R. Buell	DRAWN BY: F. Nguyen CHECKED BY: C. Koepke	FIELD INVESTIGATION BY: J. Thorne			

OGS CIVIL LOG OF TEST BORINGS SHEET

ORIGINAL SCALE IN INCHES FOR REDUCED PLANS 0 1 2 3

UNIT: 3643
PROJECT NUMBER & PHASE: 03000001001 CONTRACT NO.: 03-0F6904

DISREGARD PRINTS BEARING EARLIER REVISION DATES

REVISION DATES 10-04-13 02-10-14 02-05-14 SHEET 8 OF 11

FILE => 03-0f6904_z-lt01.dgn

USERNAME => s119538 DATE PLOTTED => 22-OCT-2014 TIME PLOTTED => 10:42

DIST	COUNTY	ROUTE	POST MILES TOTAL PROJECT	SHEET No	TOTAL SHEETS
03	But	70	24.0/24.5	116	123

PROFESSIONAL GEOLOGIST 2-5-14

PROFESSIONAL GEOLOGIST Joseph Kaump No. 7837 Exp. 1-31-15 STATE OF CALIFORNIA

8-11-14
PLANS APPROVAL DATE

The State of California or its officers or agents shall not be responsible for the accuracy or completeness of electronic copies of this plan sheet.

This LOTB sheet was prepared in accordance with the Caltrans Soil & Rock Logging, Classification, & Presentation Manual (2010 Edition).

See 2010 Standard Plans A10F and A10G for Soil Legend, and A10H for Rock Legend.

FOR PLAN VIEW, SEE
"LOG OF TEST BORINGS 1 OF 4"

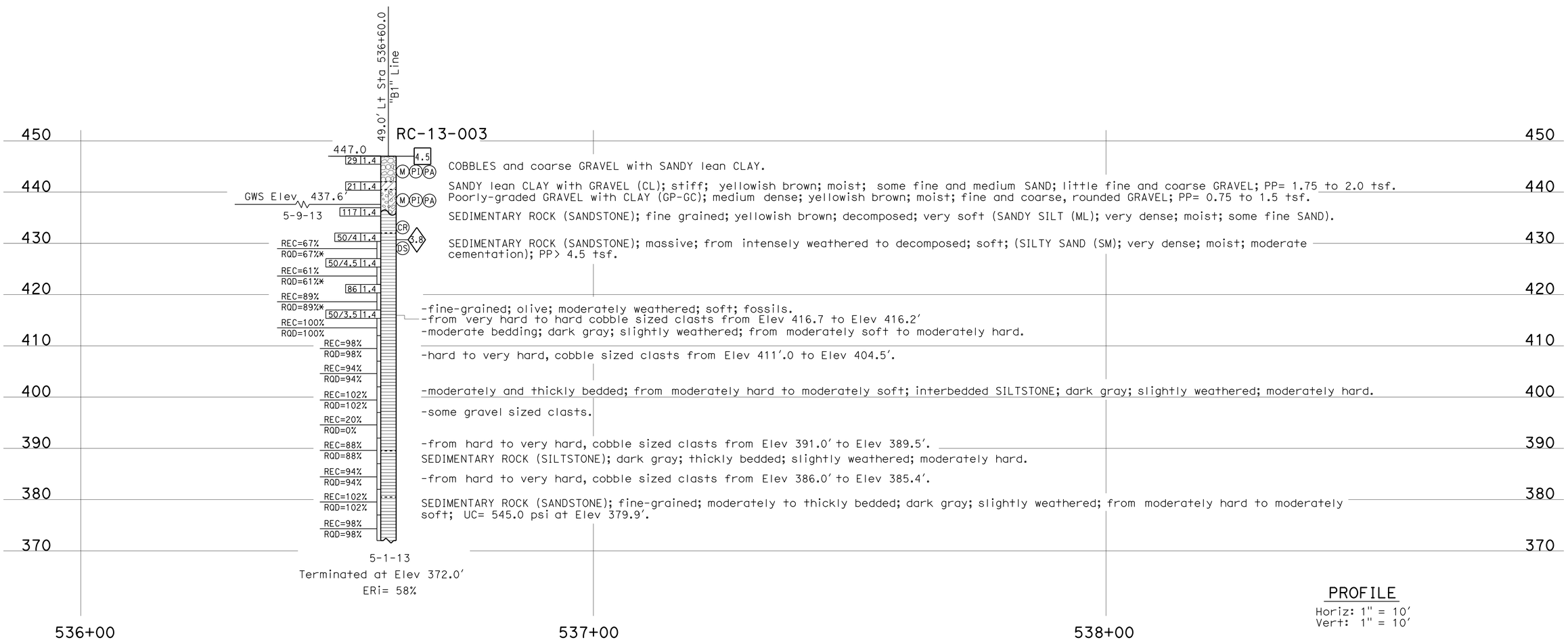

PROFILE
Horiz: 1" = 10'
Vert: 1" = 10'

ENGINEERING SERVICES	MATERIALS AND GEOTECHNICAL SERVICES	STATE OF CALIFORNIA DEPARTMENT OF TRANSPORTATION	DIVISION OF ENGINEERING SERVICES STRUCTURE DESIGN DESIGN BRANCH 1	BRIDGE NO. 12-0204 POST MILE 24.26	FLAG CANYON CREEK BRIDGE (REPLACE) LOG OF TEST BORINGS 2 OF 4
FUNCTIONAL SUPERVISOR NAME: R. Buell	DRAWN BY: F. Nguyen CHECKED BY: C. Koepke	FIELD INVESTIGATION BY: J. Kaump			

OGS CIVIL LOG OF TEST BORINGS SHEET

ORIGINAL SCALE IN INCHES FOR REDUCED PLANS 0 1 2 3

UNIT: 3643
PROJECT NUMBER & PHASE: 0300000100
CONTRACT NO.: 03-0F6904

DISREGARD PRINTS BEARING EARLIER REVISION DATES

REVISION DATES: 10-04-13 02-10-14 02-05-14

SHEET 9 OF 11

FILE => 03-0f6904_z-lt02.dgn

USERNAME => s119538 DATE PLOTTED => 22-OCT-2014 TIME PLOTTED => 10:42

DIST	COUNTY	ROUTE	POST MILES TOTAL PROJECT	SHEET No	TOTAL SHEETS
03	But	70	24.0/24.5	117	123

PROFESSIONAL GEOLOGIST 2-5-14

8-11-14
PLANS APPROVAL DATE

PROFESSIONAL GEOLOGIST Joseph Kaump No. 7837 Exp. 1-31-15 STATE OF CALIFORNIA

The State of California or its officers or agents shall not be responsible for the accuracy or completeness of electronic copies of this plan sheet.

This LOTB sheet was prepared in accordance with the Caltrans Soil & Rock Logging, Classification, & Presentation Manual (2010 Edition).

See 2010 Standard Plans A10F and A10G for Soil Legend, and A10H for Rock Legend.

FOR PLAN VIEW, SEE
"LOG OF TEST BORINGS 1 OF 4"

7.5' Rt Sta 537+39.0
"B1" Line

RC-13-002

463.3

4.5 Asphalt concrete (8").

CR Lean CLAY (CL); very stiff; dark yellowish brown; from dry to moist; few fine and coarse GRAVEL; few fine and coarse SAND; PP= 3.5 tsf; (FILL).

22 | 1.4

SILTY SAND with rock fragments (SM); medium dense; yellowish brown; moist; fine SAND; some fines; little coarse gravel-size rock fragments; (FILL).

9 | 1.4

REC=100% RQD=0%

62 | 1.4

3.7 Rock fragments in SANDY lean CLAY (CL); very dense; black and yellowish brown; moist; mostly from fine gravel to cobble-sized subangular and angular, very hard rock fragments; some medium SAND; few fines; PP= 2.0 tsf; (FILL).

REC=100% RQD=0%

M PI PA DS UU SEDIMENTARY ROCK (SILTY SANDSTONE); massive; yellowish brown; from intensely weathered to decomposed; from very soft to soft; (SILTY SAND with GRAVEL (SM); dense; moist; fine SAND; some fines; from weak to moderate cementation); PP= 2.5 tsf.

32 | 1.4

REC=89% RQD=89%

SILTY SANDSTONE; massive; yellowish brown; from very soft to soft; (SILTY SAND (SM); dense; yellowish brown; moist; fine SAND; some fines; from weak to moderate cementation); PP> 4.5 tsf.

60 | 1.4

REC=94% RQD=94%*

-soft; from moderate to strong cementation.

64 | 1.4

REC=77% RQD=77%*

-from moderately soft to soft.

DS -one foot SILTSTONE layer; dark gray; intensely weathered; moderately soft; strong cementation; wet.

66 | 1.4

29 | 1.4

REC=63% RQD=46%*

SEDIMENTARY ROCK (SANDSTONE); yellowish brown; intensely weathered; from moderately soft to soft; (SILTY SAND (SM); dense; moist; moderate and strong cementation); moderately and thickly bedded with SILTSTONE; dark gray; moderately weathered; from moderately soft to moderately hard; PP> 4.5 tsf.

86/9.5 | 1.4

REC=100% RQD=100%*

-very dense; from wet to moist, UC= 1908 psi at Elev 416.8'.

SEDIMENTARY ROCK (SANDSTONE); fine grained; moderately bedded; olive gray; from moderately to slightly weathered; from moderately hard to moderately soft; fossils; UC= 335 psi at Elev 414.7'.

75/6 | 1.4

-fine-grained; thickly bedded; dark gray; slightly weathered; from moderately soft to moderately hard; UC= 137 psi at Elev 409.0'.

REC=104% RQD=104%

SEDIMENTARY ROCK (SILTSTONE); fine-grained; very dark gray; slightly weathered; from moderately soft to moderately hard.

REC=98% RQD=98%

SEDIMENTARY ROCK (SANDSTONE); fine-grained; very thinly to thinly bedded; gray; slightly weathered; from moderately hard to hard; UC= 5180 psi at Elev 404.8'.

REC=104% RQD=104%

-from moderately soft to moderately hard; moderately interbedded with SILTSTONE; dark gray; moderately hard.

REC=100% RQD=100%

-thinly to moderately bedded; moderately hard and moderately soft.

-very hard and moderately hard; UC= 9970 psi at Elev 391.3'.

REC=100% RQD=100%

-moderately hard.

SEDIMENTARY ROCK (SILTSTONE); dark gray; very thinly bedded; slightly weathered; moderately soft and moderately hard.

REC=100% RQD=100%

-very hard cobble sized clast from Elev 386.5' to Elev 386.0'.

REC=100% RQD=100%

REC=92% RQD=40%

SEDIMENTARY ROCK (SANDSTONE); fine-grained; moderately bedded; dark gray; slightly weathered; from moderately soft to moderately hard.

UC= 504 psi at Elev 371.6'.

REC=94% RQD=50%

REC=100% RQD=52%

REC=93% RQD=82%

-hard cobble sized clast from Elev 362.1' to Elev 361.3'.

-coarse and fine GRAVEL; hard.

REC=100% RQD=86%

REC=102% RQD=90%

REC=94% RQD=70%

-hard and very hard gravel and cobble sized clasts from Elev 356.1' to Elev 346.8'.

REC=34% RQD=10%

REC=102% RQD=102%

SEDIMENTARY ROCK (CONGLOMERATE); fine-grained matrix; fine and coarse gravel clasts; gray; fresh; from hard to vey hard; moderately fractured.

REC=101% RQD=101%

SEDIMENTARY ROCK (SANDSTONE); fine-grained; massive; dark gray; fresh; from moderately soft to moderately hard.

REC=84% RQD=84%

REC=98% RQD=98%

-from hard to very hard cobble sized clasts from Elev 324.6' to Elev 318.3'.

REC=99% RQD=99%

4-24-13
Terminated at Elev 313.3
ERi= 86%

460 450 440 430 420 410 400 390 380 370 360 350 340 330 320 310

537+00 538+00 539+00

PROFILE
Horiz: 1" = 10'
Vert: 1" = 10'

ENGINEERING SERVICES	MATERIALS AND GEOTECHNICAL SERVICES	STATE OF CALIFORNIA DEPARTMENT OF TRANSPORTATION	DIVISION OF ENGINEERING SERVICES STRUCTURE DESIGN DESIGN BRANCH 1	BRIDGE NO. 12-0204 POST MILE 24.26	FLAG CANYON CREEK BRIDGE (REPLACE)
FUNCTIONAL SUPERVISOR NAME: R. Buell	DRAWN BY: F. Nguyen CHECKED BY: C. Koepke	FIELD INVESTIGATION BY: J. Kaump			LOG OF TEST BORINGS 3 OF 4

OGS CIVIL LOG OF TEST BORINGS SHEET

ORIGINAL SCALE IN INCHES FOR REDUCED PLANS 0 1 2 3

UNIT: 3643
PROJECT NUMBER & PHASE: 03000001001 CONTRACT NO.: 03-0F6904

DISREGARD PRINTS BEARING EARLIER REVISION DATES → REVISION DATES 10-04-13 02-10-14 02-05-14

SHEET 10 OF 11

FILE => 03-0f6904_z-lt03.dgn

USERNAME => s119538 DATE PLOTTED => 22-OCT-2014 TIME PLOTTED => 10:42

DIST	COUNTY	ROUTE	POST MILES TOTAL PROJECT	SHEET No.	TOTAL SHEETS
03	But	70	24.0/24.5	118	123

REGISTERED CIVIL ENGINEER 5-22-14 DATE

8-11-14
PLANS APPROVAL DATE

REGISTERED PROFESSIONAL ENGINEER
Daniel Sessions
No. 77723
Exp. 6-30-15
CIVIL
STATE OF CALIFORNIA

The State of California or its officers or agents shall not be responsible for the accuracy or completeness of scanned copies of this plan sheet.

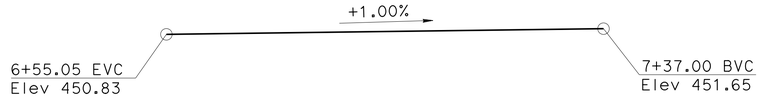

PROFILE GRADE
NO SCALE

QUANTITIES

TEMPORARY RAILING (TYPE K)	120	LF
TEMPORARY TRAFFIC SCREEN	120	LF
TEMPORARY BRIDGE (BRIDGE REMOVAL)	LUMP	SUM
TEMPORARY BRIDGE (STRUCTURE EXCAVATION)	50	CY
TEMPORARY BRIDGE (STRUCTURE BACKFILL)	25	CY
TEMPORARY BRIDGE (HOT MIX ASPHALT (BRIDGE))	14	TON
TEMPORARY BRIDGE (FURNISH STRUCTURAL STEEL)	35,895	LB
TEMPORARY BRIDGE (ERECT STRUCTURAL STEEL)	35,895	LB
TEMPORARY BRIDGE (UNTREATED LUMBER AND TIMBER)	18	MFBM

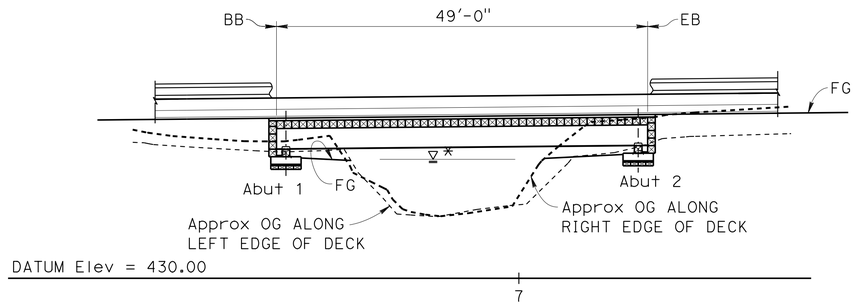

ELEVATION
1" = 10'

* For hydrologic summary, see "FOUNDATION PLAN" sheet.

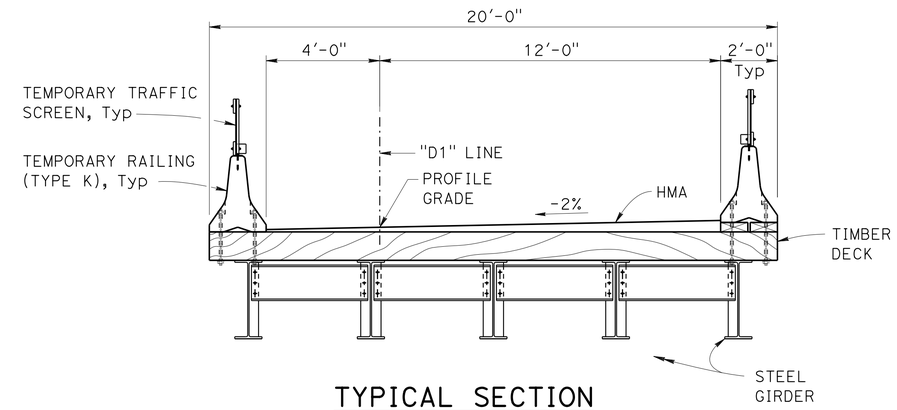

TYPICAL SECTION
3/8" = 1'-0"

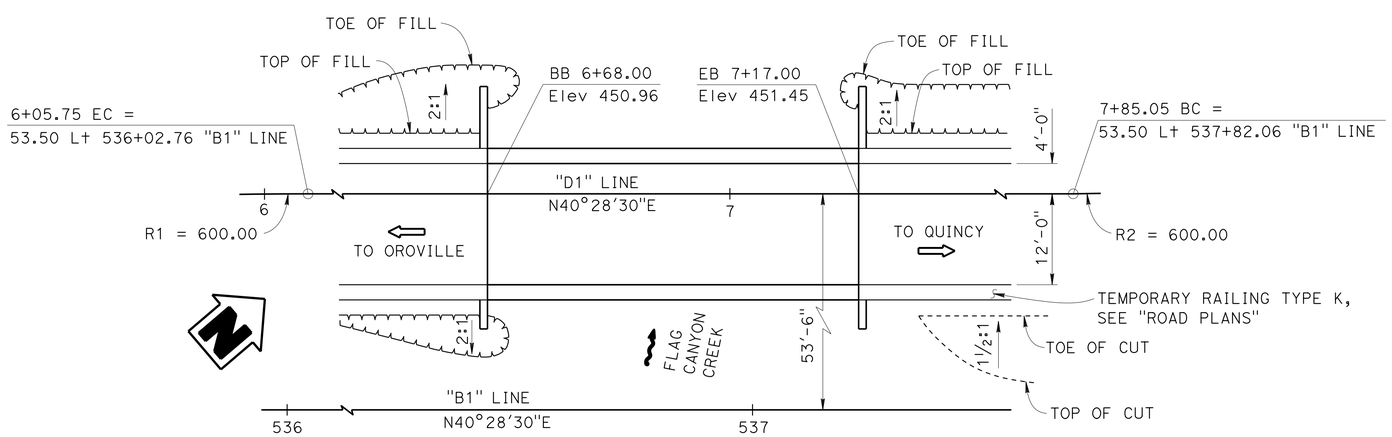

PLAN
1" = 10'

INDEX TO PLANS

SHEET NO.	TITLE
1.	GENERAL PLAN
2.	DECK CONTOURS
3.	FOUNDATION PLAN
4.	ABUTMENT DETAILS
5.	TYPICAL SECTION
6.	TIMBER DECK DETAILS

STANDARD PLANS DATED MAY 2010

	A10A	ABBREVIATIONS (SHEET 1 OF 2)
RSP	A10B	ABBREVIATIONS (SHEET 2 OF 2)
	A10C	LINES AND SYMBOLS (SHEET 1 OF 3)
	A10D	LINES AND SYMBOLS (SHEET 2 OF 3)
	A10E	LINES AND SYMBOLS (SHEET 3 OF 3)
	A62C	LIMITS OF PAYMENT FOR EXCAVATION AND BACKFILL BRIDGE
	T3A	TEMPORARY RAILING (TYPE K)
	T4	TEMPORARY TRAFFIC SCREEN

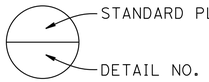

NOTES:

1. For "GENERAL NOTES", see "DECK CONTOURS" sheet.
2. Permanent FLAG CANYON CREEK BRIDGE (Br No 12-0204) not shown, see "FLAG CANYON CREEK BRIDGE (REPLACE)" plans for details.
3. Remove TEMPORARY FLAG CANYON CREEK BRIDGE after construction of Bridge No. 12-0204 has been completed.

Jeff Sims
DESIGN ENGINEER

	BY	CHECKED
DESIGN	Kevin Harper	Greg Thornton
DETAILS	Jie Tang	Greg Thornton
QUANTITIES	Jin Zhou	Bob Huddleston

LOAD & RESISTANCE FACTOR DESIGN — LIVE LOADING: HL93 AND PERMIT DESIGN VEHICLE

	BY	CHECKED
LAYOUT	Daniel Sessions	Kevin Harper
SPECIFICATIONS	Elaheh Mansoubi	PLANS AND SPECS COMPARED Elaheh Mansoubi

ORIGINAL SCALE IN INCHES FOR REDUCED PLANS 0 1 2 3

STATE OF CALIFORNIA
DEPARTMENT OF TRANSPORTATION

DIVISION OF ENGINEERING SERVICES
STRUCTURE DESIGN
DESIGN BRANCH 1

BRIDGE NO.
POST MILE 24.26

TEMPORARY FLAG CANYON CREEK BRIDGE
GENERAL PLAN

UNIT: 3576
PROJECT NUMBER & PHASE: 03000001001
CONTRACT NO.: 03-0F6904

DISREGARD PRINTS BEARING EARLIER REVISION DATES

REVISION DATES: 01-23-13 | 03/13/14 | 05/14/14

SHEET 1 OF 6

USERNAME => s119538 DATE PLOTTED => 22-OCT-2014 TIME PLOTTED => 10:43

STRUCTURES DESIGN GENERAL PLAN SHEET (ENGLISH) (REV.09-01-10)

FILE => 03-0f6904-a-gp-temp.dgn

DIST	COUNTY	ROUTE	POST MILES TOTAL PROJECT	SHEET No.	TOTAL SHEETS
03	But	70	24.0/24.5	119	123

REGISTERED CIVIL ENGINEER 5-22-14 DATE

8-11-14
PLANS APPROVAL DATE

REGISTERED PROFESSIONAL ENGINEER
Daniel Sessions
No. 77723
Exp. 6-30-15
CIVIL
STATE OF CALIFORNIA

The State of California or its officers or agents shall not be responsible for the accuracy or completeness of electronic copies of this plan sheet.

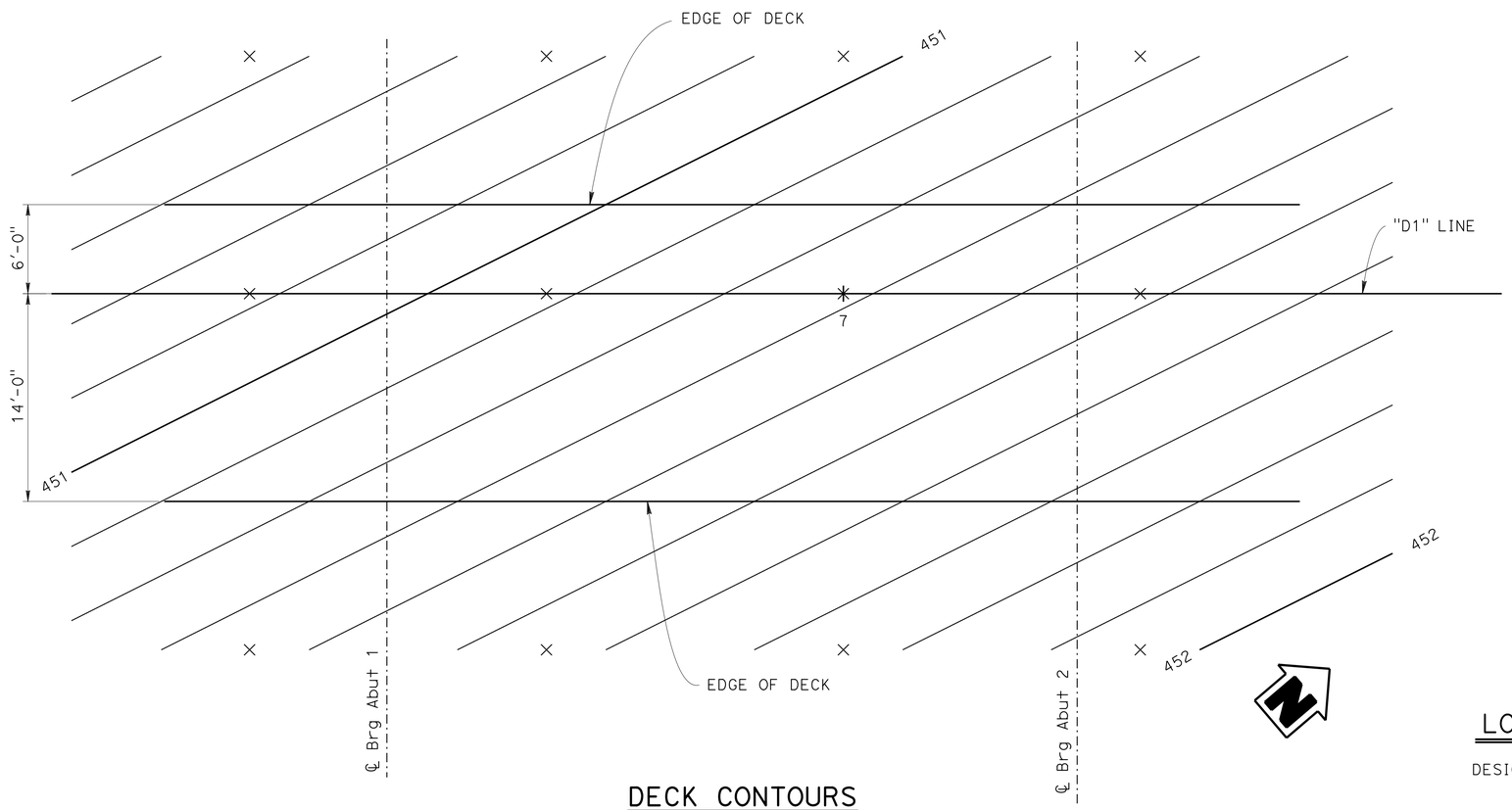

DECK CONTOURS

1" = 5'

NOTES:

1. Contours do not include camber.
2. Contour interval = 0.10'.

X - Indicates 20' Intervals along station line.

GENERAL NOTES

LOAD AND RESISTANCE FACTOR DESIGN

DESIGN: AASHTO LRFD Bridge Design Specifications, Fourth Edition and the California Amendments preface dated November 2011.

For used steel, additional design check includes the Service Load Design Method of the Bridge Design Specifications, LFD 2004

LIVE LOADING: HL-93 and permit design vehicle

STRUCTURAL TIMBER: Douglas Fir No. 2 or Better untreated. Timber over 4" thick shall be Rough Sawn

STRUCTURAL STEEL: ASTM A-709 Grade 50 (girder)
f_y = 50 ksi f_u = 70 ksi

ASTM A-709 Grade 36 (cross frames, stiffeners, and alternative girder)
f_y = 36 ksi f_u = 58 ksi

FOOTING PRESSURE: (WORKING STRESS DESIGN)

SUPPORT LOCATION	PERMISSIBLE GROSS CONTACT STRESS (SETTLEMENT) (ksf)	ALLOWABLE GROSS BEARING CAPACITY (ksf)
Abut 1	3.0	6.0
Abut 2	3.0	6.0

	BY	CHECKED
DESIGN	Daniel Sessions	Kevin Harper
DETAILS	Jie Tang	Kevin Harper
QUANTITIES	Jin Zhou	Bob Huddleston

STATE OF CALIFORNIA
DEPARTMENT OF TRANSPORTATION

DIVISION OF ENGINEERING SERVICES
STRUCTURE DESIGN
DESIGN BRANCH 1

BRIDGE NO.
POST MILE 24.26

TEMPORARY FLAG CANYON CREEK BRIDGE
DECK CONTOURS

STRUCTURES DESIGN DETAIL SHEET (ENGLISH) (REV. 09-01-10)

ORIGINAL SCALE IN INCHES FOR REDUCED PLANS 0 1 2 3

UNIT: 3576
PROJECT NUMBER & PHASE: 03000001001 CONTRACT NO.: 03-0F6904

DISREGARD PRINTS BEARING EARLIER REVISION DATES

REVISION DATES: 06/25/13 07/11/14 07/08/14

SHEET 2 OF 6

FILE => 03-0f6904-b-dc-temp.dgn

USERNAME => s119538 DATE PLOTTED => 22-OCT-2014 TIME PLOTTED => 10:43

DIST	COUNTY	ROUTE	POST MILES TOTAL PROJECT	SHEET No.	TOTAL SHEETS
03	But	70	24.0/24.5	120	123

REGISTERED CIVIL ENGINEER 5-22-14 DATE

8-11-14
PLANS APPROVAL DATE

REGISTERED PROFESSIONAL ENGINEER Daniel Sessions No. 77723 Exp. 6-30-15 CIVIL STATE OF CALIFORNIA

The State of California or its officers or agents shall not be responsible for the accuracy or completeness of electronic copies of this plan sheet.

CURVE DATA

No.	R	Δ	T	L
Ⓐ	600.00′	9°30′00″	49.86′	99.48′
Ⓑ	600.00′	9°30′00″	49.86′	99.48′

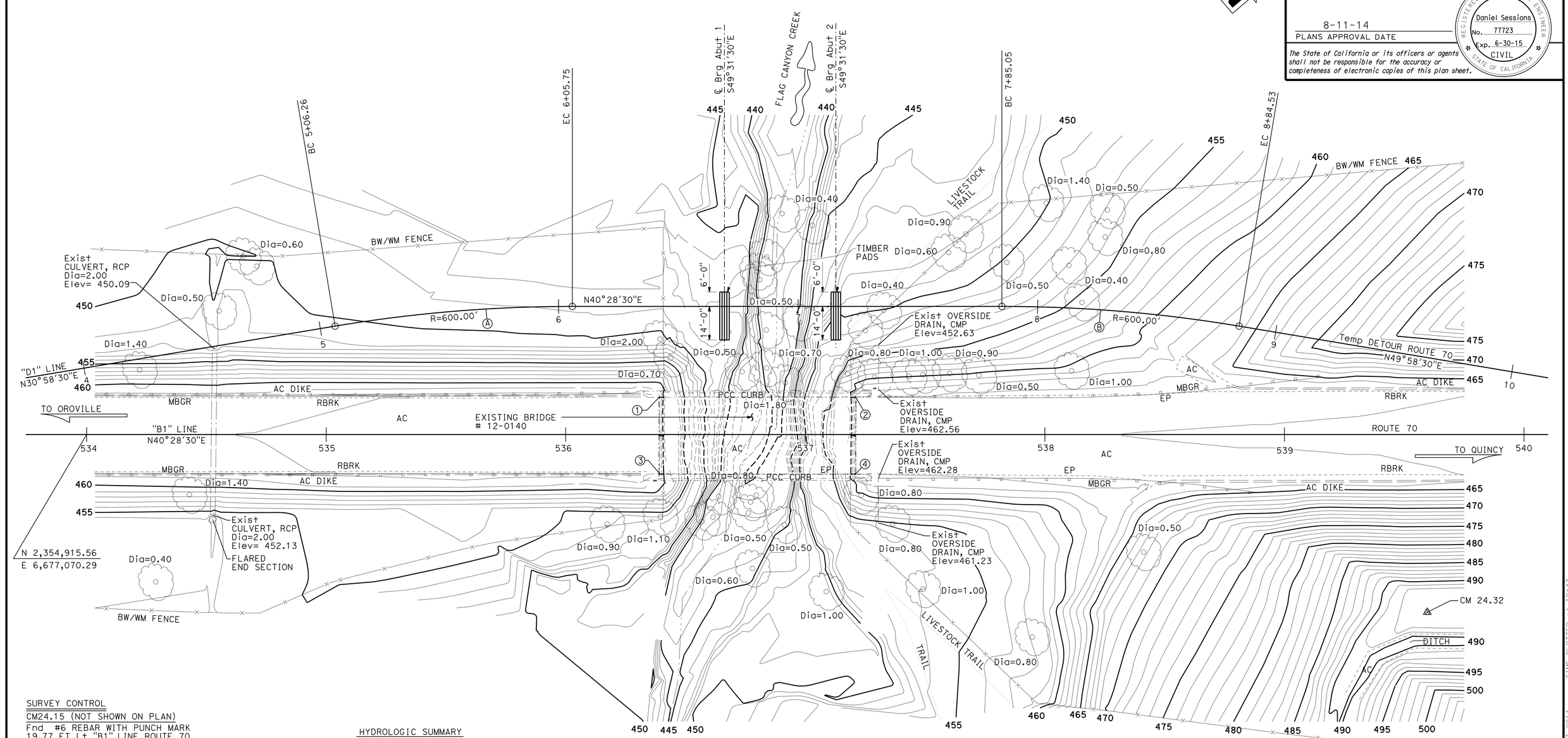

SURVEY CONTROL

CM24.15 (NOT SHOWN ON PLAN)
Fnd #6 REBAR WITH PUNCH MARK
19.77 FT Lt "B1" LINE ROUTE 70
Sta 529+82.58
N 2,354,610.87
E 6,676,784.30
Elev. = 458.01

CM24.32
Fnd 2" BRASS DISK
74.18 FT Rt "B1" LINE ROUTE 70
Sta 539+59.64
N 2,355,293.12
E 6,677,489.99
Elev. = 492.81

HYDROLOGIC SUMMARY

DRAINAGE AREA: 2.6 SQUARE MILES

	DESIGN FLOOD	BASE FLOOD	OVERTOPPING FLOOD
FREQUENCY (YEARS)	10	N/A	N/A
DISCHARGE (CUBIC FEET PER SECOND)	882.0	N/A	N/A
WATER SURFACE (Elev AT BRIDGE)	445.7	N/A	N/A

FLOOD PLAIN DATA ARE BASED UPON INFORMATION AVAILABLE WHEN THE PLANS WERE PREPARED AND ARE SHOWN TO MEET FEDERAL REQUIREMENTS. THE ACCURACY OF SAID INFORMATION IS NOT WARRANTED BY THE STATE AND INTERESTED OR AFFECTED PARTIES SHOULD MAKE THEIR OWN INVESTIGATIONS.

Bridge Location
① - 15.50 Lt "B1" LINE, Sta 536+38.93, Elev.=462.64 ±
② - 15.47 Lt "B1" LINE, Sta 537+21.14, Elev.=463.13 ±
③ - 16.36 Rt "B1" LINE, Sta 536+39.21, Elev.=462.63 ±
④ - 16.44 Rt "B1" LINE, Sta 537+21.06, Elev.=463.06 ±

PRELIMINARY INVESTIGATION SECTION

SCALE 1"=20′	VERT.DATUM NAVD88	PHOTOGRAMMETRY AS OF: X			
	HORZ.DATUM NAD83 (2004.69)	SURVEYED BY DISTRICT	CHECKED BY J. BORDEN	05/2013	
ALIGNMENT TIES Dist TRAVERSE SHEET		DRAFTED BY T. ZOLNIKOV	CHECKED BY L. LEW	05/2013	

	BY	CHECKED
DESIGN	Daniel Sessions	Kevin Harper
DETAILS	Jie Tang	Kevin Harper
QUANTITIES	Jin Zhou	Bob Huddleston

STATE OF CALIFORNIA
DEPARTMENT OF TRANSPORTATION

DIVISION OF ENGINEERING SERVICES
STRUCTURE DESIGN
DESIGN BRANCH 1

BRIDGE NO.
POST MILE 24.26

TEMPORARY FLAG CANYON CREEK BRIDGE
FOUNDATION PLAN

STRUCTURES FOUNDATION PLAN SHEET (ENGLISH) (REV. 09-01-10)

ORIGINAL SCALE IN INCHES FOR REDUCED PLANS 0 1 2 3

UNIT: 3646
PROJECT NUMBER & PHASE: 03000001001
CONTRACT NO.: 03-0F6904

DISREGARD PRINTS BEARING EARLIER REVISION DATES

REVISION DATES 06/24/13 02/10/14 07/22/14

SHEET 3 OF 6

FILE => 03-0f6904-c-fp-temp.dgn

USERNAME => s119538 DATE PLOTTED => 22-OCT-2014 TIME PLOTTED => 10:43

DIST	COUNTY	ROUTE	POST MILES TOTAL PROJECT	SHEET No.	TOTAL SHEETS
03	But	70	24.0/24.5	121	123

REGISTERED CIVIL ENGINEER 5-22-14 DATE

8-11-14
PLANS APPROVAL DATE

REGISTERED PROFESSIONAL ENGINEER Daniel Sessions No. 77723 Exp. 6-30-15 CIVIL STATE OF CALIFORNIA

The State of California or its officers or agents shall not be responsible for the accuracy or completeness of electronic copies of this plan sheet.

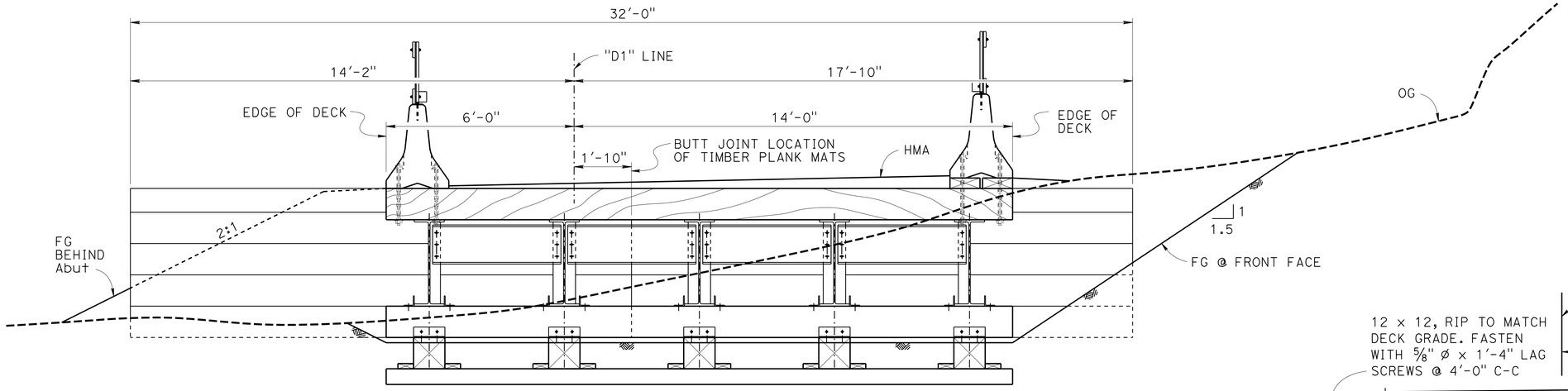

NOTE: For details not shown, see "ELEVATION - ABUTMENT 1".

ELEVATION - ABUTMENT 2

½" = 1'-0"

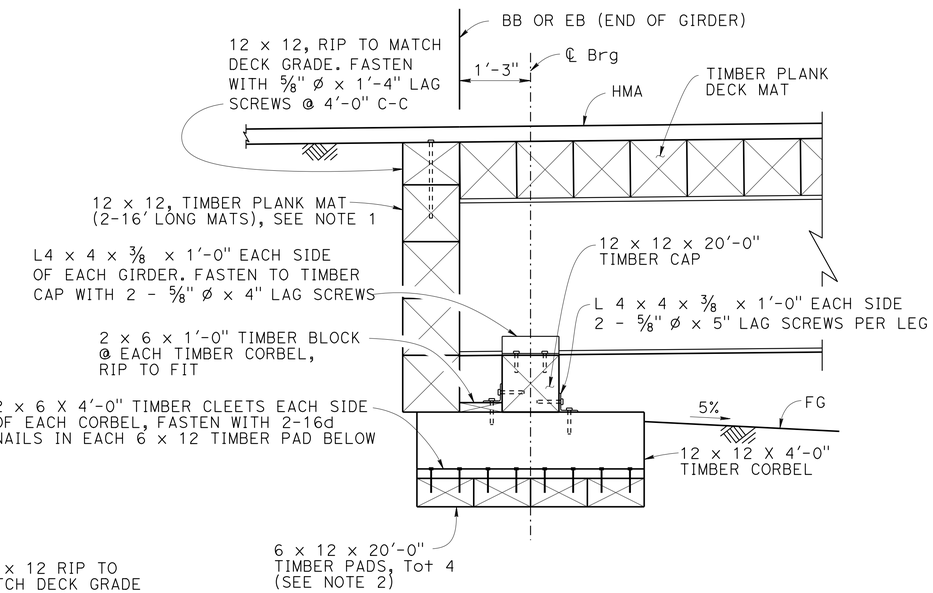

SECTION A-A

¾" = 1'-0"

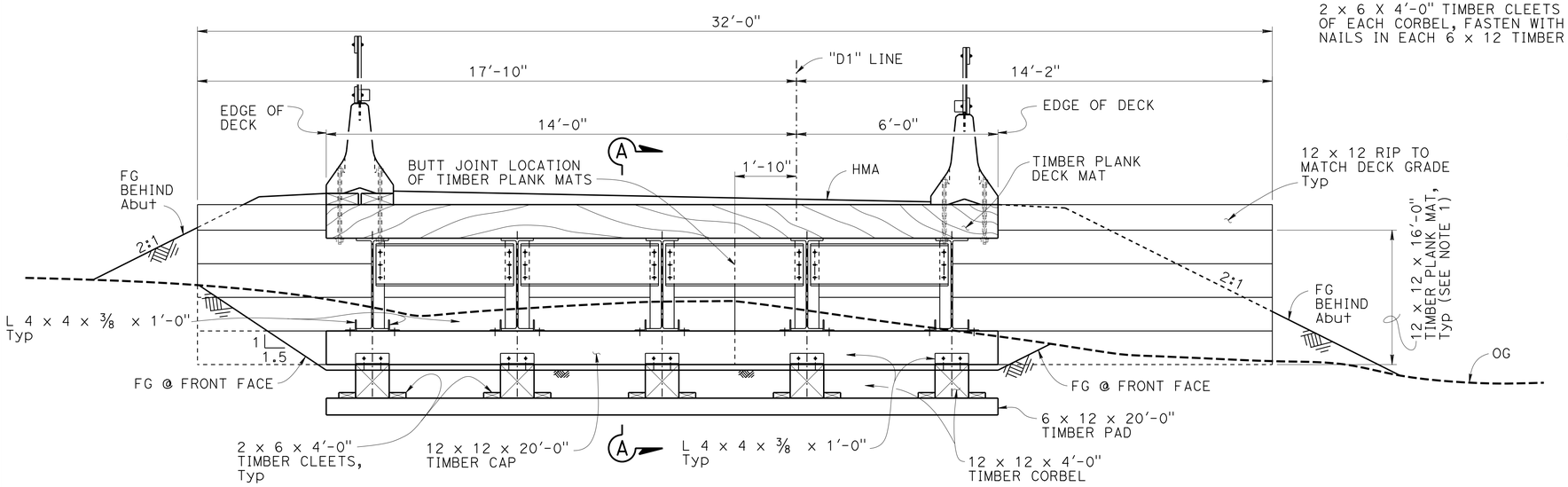

ELEVATION - ABUTMENT 1

½" = 1'-0"

NOTES:

1. For TIMBER PLANK MAT details, see "TIMBER PLANK DECK MAT" detail on "TIMBER DECK DETAILS" sheet.
2. Timber Pads may have one Joint per individual member along its length. Joints shall occur at center line between corbels (±4"). Joints shall be staggard so that Joints in adjacent timbers do not occur. Minimum Timber length shall be 9 feet.

DESIGN	BY Kevin Harper	CHECKED Greg Thornton	
DETAILS	BY Jie Tang	CHECKED Greg Thornton	
QUANTITIES	BY Jin Zhou	CHECKED Bob Huddleston	

STATE OF CALIFORNIA
DEPARTMENT OF TRANSPORTATION

DIVISION OF ENGINEERING SERVICES
STRUCTURE DESIGN
DESIGN BRANCH 1

BRIDGE NO.
POST MILE 24.26

TEMPORARY FLAG CANYON CREEK BRIDGE
ABUTMENT DETAILS

STRUCTURES DESIGN DETAIL SHEET (ENGLISH) (REV. 09-01-10)

ORIGINAL SCALE IN INCHES FOR REDUCED PLANS 0 1 2 3

UNIT: 3576
PROJECT NUMBER & PHASE: 03000001001
CONTRACT NO.: 03-0F6904

DISREGARD PRINTS BEARING EARLIER REVISION DATES

REVISION DATES 07/02/13 05/14/14 05/21/14

SHEET 4 OF 6

FILE => 03-0f6904-e-abutdet-temp.dgn

USERNAME => s119538 DATE PLOTTED => 22-OCT-2014 TIME PLOTTED => 10:43

DIST	COUNTY	ROUTE	POST MILES TOTAL PROJECT	SHEET No.	TOTAL SHEETS
03	But	70	24.0/24.5	122	123

REGISTERED CIVIL ENGINEER 5-22-14 DATE

8-11-14
PLANS APPROVAL DATE

REGISTERED PROFESSIONAL ENGINEER Daniel Sessions No. 77723 Exp. 6-30-15 CIVIL STATE OF CALIFORNIA

The State of California or its officers or agents shall not be responsible for the accuracy or completeness of electronic copies of this plan sheet.

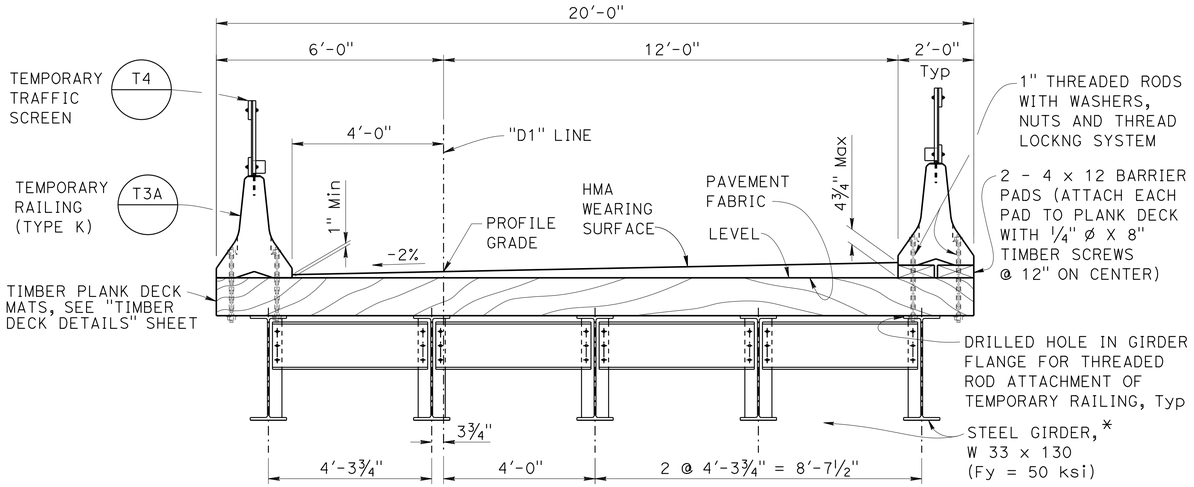

TYPICAL SECTION

½" = 1'-0"

* W 36 X 150 ASTM A709 GRADE 36 CAN BE USED AS AN ALTERNATIVE

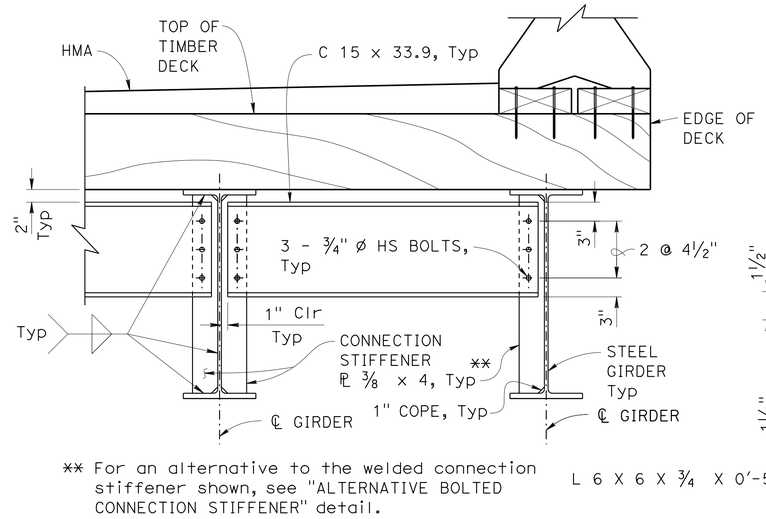

** For an alternative to the welded connection stiffener shown, see "ALTERNATIVE BOLTED CONNECTION STIFFENER" detail.

DIAPHRAGM DETAIL

1" = 1'-0"

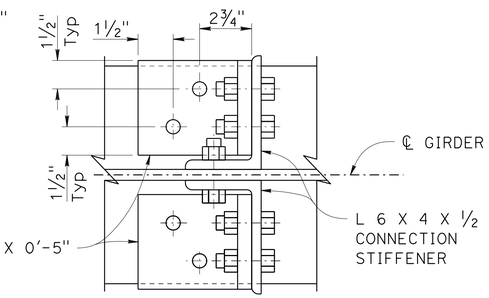

SECTION B-B

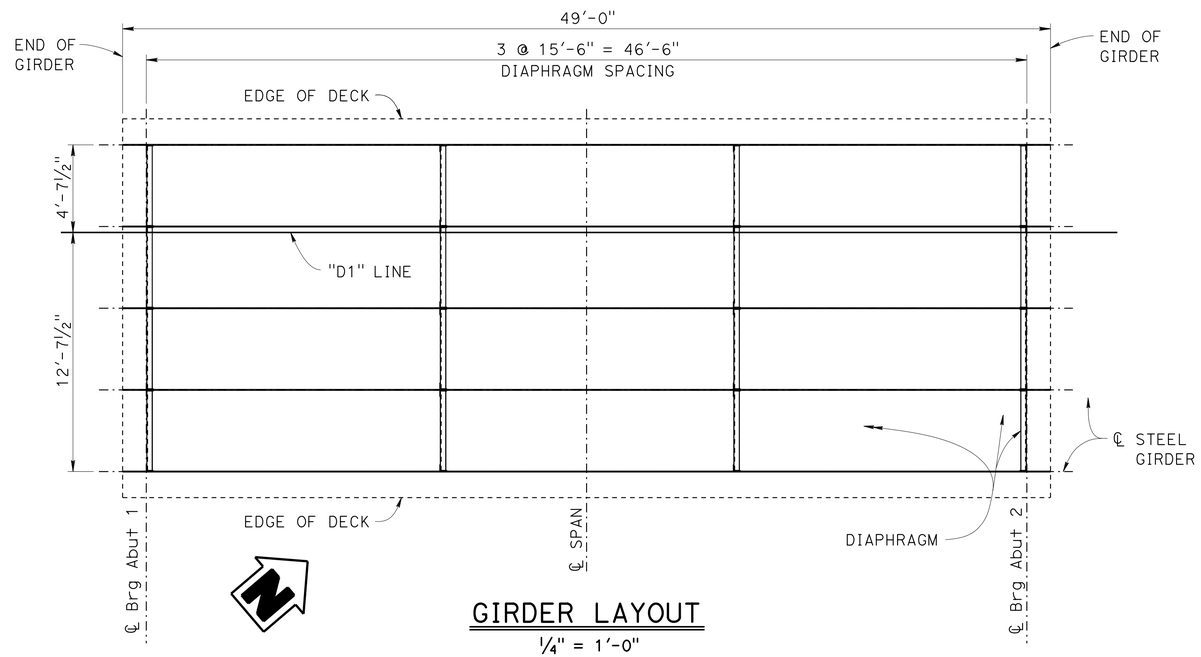

GIRDER LAYOUT

¼" = 1'-0"

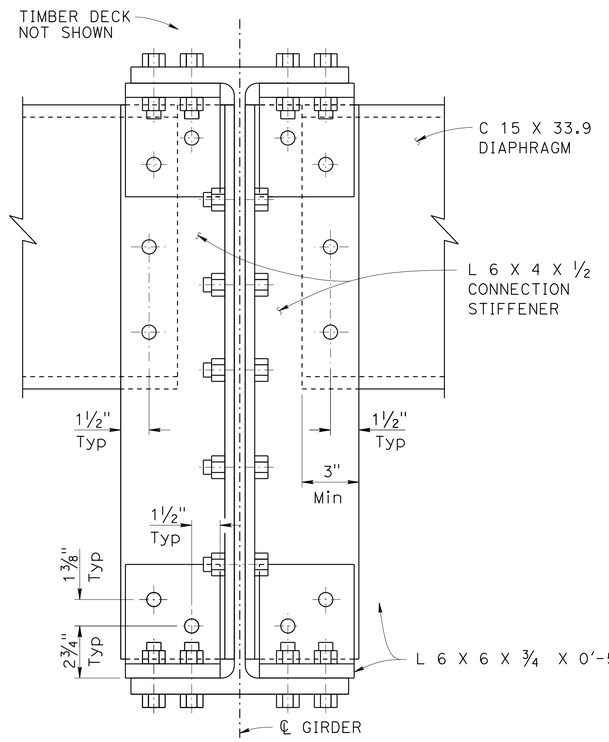

SECTION A-A

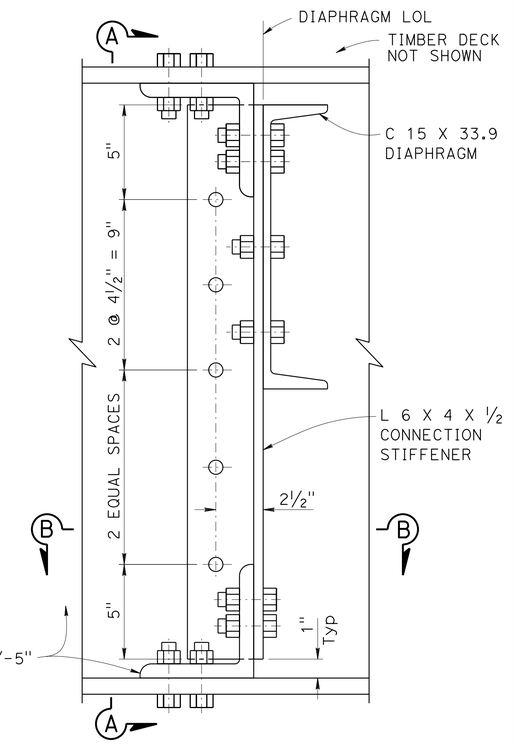

GIRDER ELEVATION

ALTERNATIVE BOLTED CONNECTION STIFFENER

3" = 1'-0"

GIRDER LAYOUT NOTES:

1. Centerlines of abutments and intermediate diaphragm layout lines shown are parallel.
2. Place girders parallel to "D1" line.

ALTERNATIVE CONNECTION STIFFENER NOTES:

1. For details not shown, see "DIAPHRAGM DETAIL".
2. All Bolts are ¾" ø.
3. Connection details in "SECTION B-B" are typical for the bottom and the top Flange.

	BY	CHECKED
DESIGN	Kevin Harper	Greg Thornton
DETAILS	Jie Tang	Greg Thornton
QUANTITIES	Jin Zhou	Bob Huddleston

STATE OF CALIFORNIA
DEPARTMENT OF TRANSPORTATION

DIVISION OF ENGINEERING SERVICES
STRUCTURE DESIGN
DESIGN BRANCH 1

BRIDGE NO.
POST MILE 24.26

TEMPORARY FLAG CANYON CREEK BRIDGE
TYPICAL SECTION

STRUCTURES DESIGN DETAIL SHEET (ENGLISH) (REV. 09-01-10)

ORIGINAL SCALE IN INCHES FOR REDUCED PLANS 0 1 2 3

UNIT: 3576
PROJECT NUMBER & PHASE: 03000001001
CONTRACT NO.: 03-0F6904

DISREGARD PRINTS BEARING EARLIER REVISION DATES

REVISION DATES 06/28/13 07/11/14 07/24/14

SHEET 5 OF 6

FILE => 03-0f6904-h-ts-temp.dgn

USERNAME => s119538 DATE PLOTTED => 22-OCT-2014 TIME PLOTTED => 10:43

DIST	COUNTY	ROUTE	POST MILES TOTAL PROJECT	SHEET No.	TOTAL SHEETS
03	But	70	24.0/24.5	123	123

REGISTERED CIVIL ENGINEER 5-22-14 DATE

8-11-14
PLANS APPROVAL DATE

REGISTERED PROFESSIONAL ENGINEER
Daniel Sessions
No. 77723
Exp. 6-30-15
CIVIL
STATE OF CALIFORNIA

The State of California or its officers or agents shall not be responsible for the accuracy or completeness of electronic copies of this plan sheet.

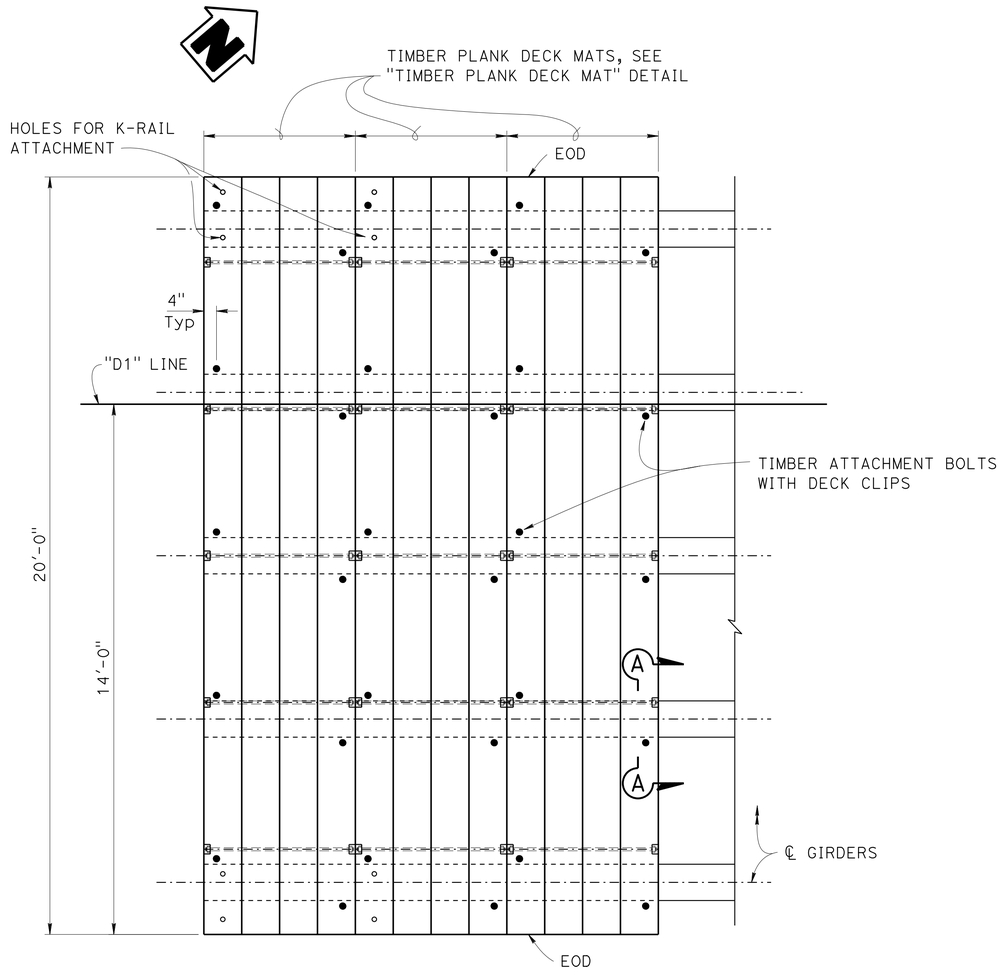

TIMBER PLANK DECK PART PLAN
½" = 1'-0"

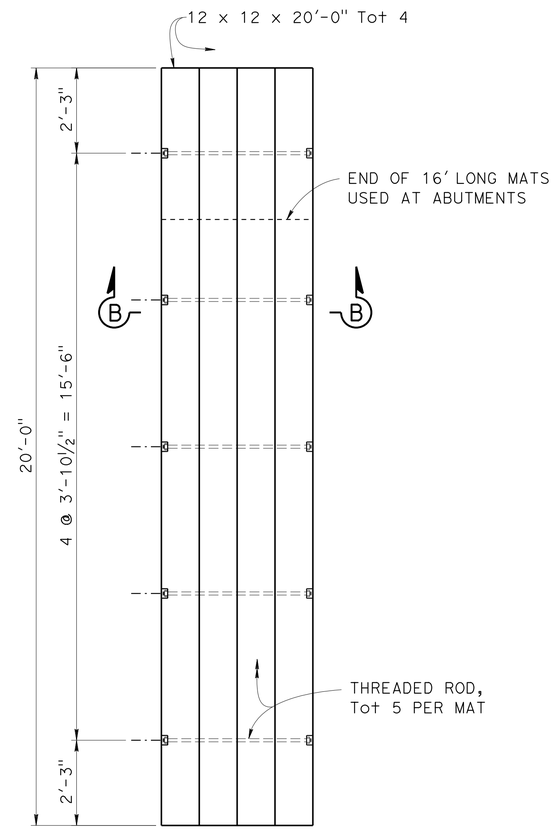

TIMBER PLANK DECK MAT
½" = 1'-0"

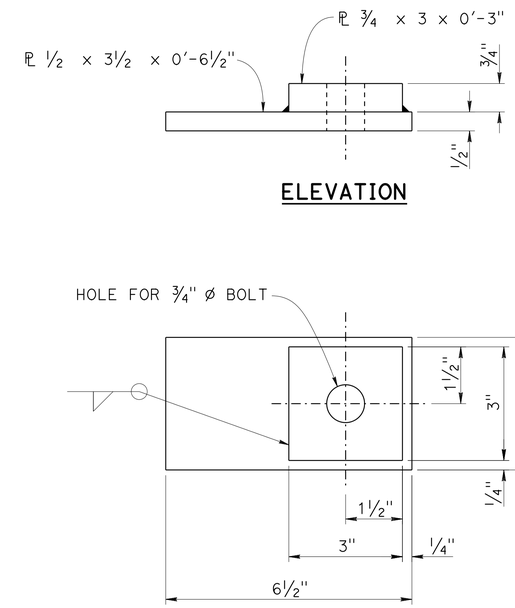

DECK CLIP DETAIL
6" = 1'-0"

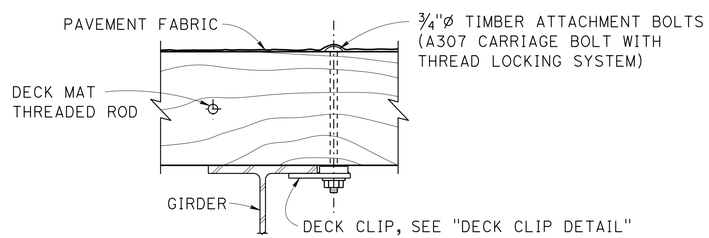

SECTION A-A
1½" = 1'-0"

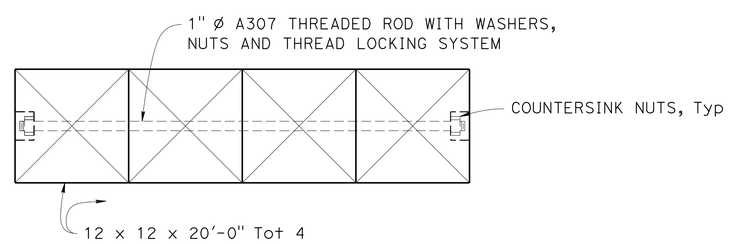

SECTION B-B
1½" = 1'-0"

DESIGN	BY Kevin Harper	CHECKED Greg Thornton	
DETAILS	BY Jie Tang	CHECKED Greg Thornton	
QUANTITIES	BY Jin Zhou	CHECKED Bob Huddleston	

STATE OF CALIFORNIA
DEPARTMENT OF TRANSPORTATION

DIVISION OF ENGINEERING SERVICES
STRUCTURE DESIGN
DESIGN BRANCH 1

BRIDGE NO.
POST MILE 24.26

TEMPORARY FLAG CANYON CREEK BRIDGE
TIMBER DECK DETAILS

STRUCTURES DESIGN DETAIL SHEET (ENGLISH) (REV. 09-01-10)

ORIGINAL SCALE IN INCHES FOR REDUCED PLANS 0 1 2 3

UNIT: 3576
PROJECT NUMBER & PHASE: 03000001001
CONTRACT NO.: 03-0F6904

DISREGARD PRINTS BEARING EARLIER REVISION DATES

REVISION DATES 01/04/13 01/22/14 02/10/14

SHEET 6 OF 6

FILE => 03-0f6904-u-tdet-tem.dgn

USERNAME => s179538 DATE PLOTTED => 22-OCT-2014 TIME PLOTTED => 10:43