Dist	COUNTY	ROUTE	POST MILES TOTAL PROJECT	SHEET No.	TOTAL SHEETS
03	ED	89	8.6/13.8	79	231

REGISTERED CIVIL ENGINEER 11-18-13 DATE

11-18-13
PLANS APPROVAL DATE

REGISTERED PROFESSIONAL ENGINEER CHRIS ROCKEY No. C78030 Exp. 9-30-15 CIVIL STATE OF CALIFORNIA

THE STATE OF CALIFORNIA OR ITS OFFICERS OR AGENTS SHALL NOT BE RESPONSIBLE FOR THE ACCURACY OR COMPLETENESS OF SCANNED COPIES OF THIS PLAN SHEET.

6

NOTE:
1. SEE Std PLAN D84 FOR "FOOTING" DIMENSIONS AND REINFORCEMENT
2. SEE Std PLAN RSP B3-5 FOR "FOOTING STEP" DIMENSIONS AND REINFORCEMENT
3. SEE Std PLAN D83A PRECAST REINFORCED CONCRETE BOX CULVERT DETAILS
4. SEE Std PLAN RSP B11-47 CABLE RAILING AND THE SUMMARY OF QUANTITIES CABLE RAILING TABLE.

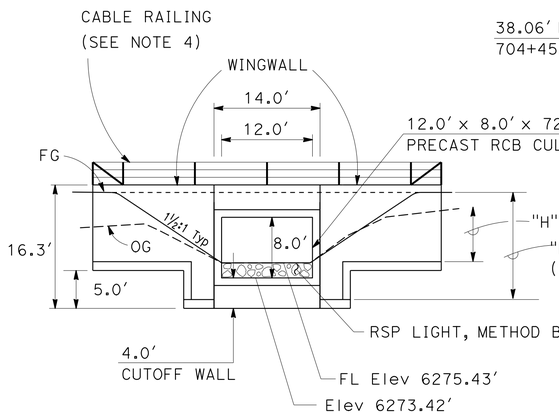

L† ELEVATION
(INLET)

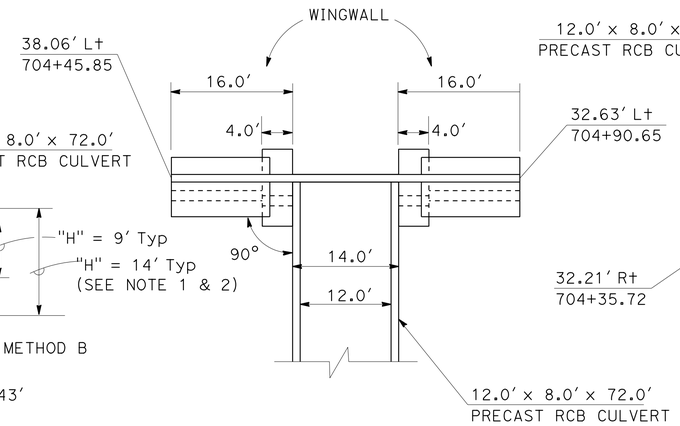

L† PARTIAL PLAN
(INLET)

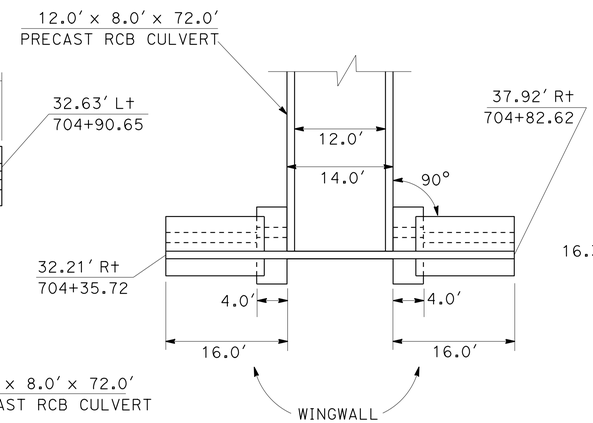

R† PARTIAL PLAN
(OUTLET)

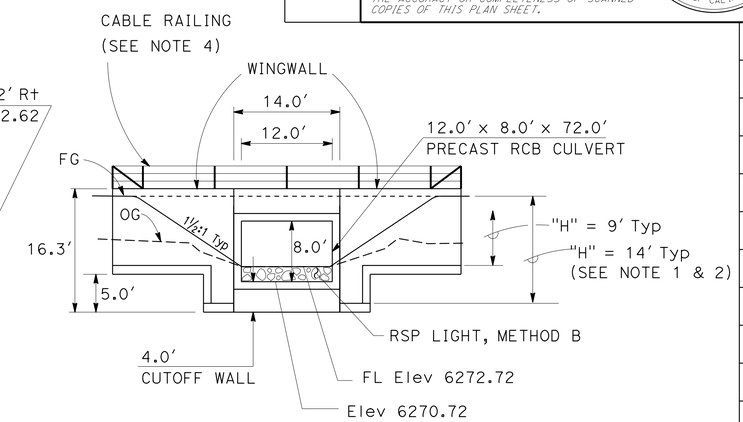

R† ELEVATION
(OUTLET)

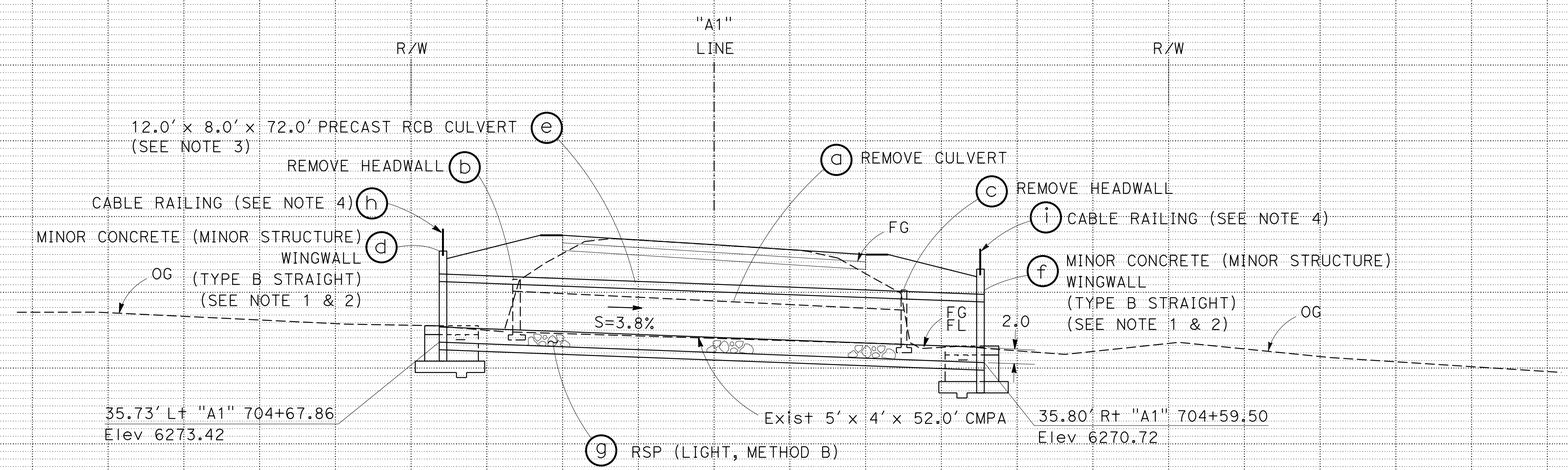

DRAINAGE SYSTEM No. 31
"A1" 704+64.33
SKEW: 6°30′

6 **REPLACED PER ADDENDUM No. 6 DATED JULY 24, 2014**

DRAINAGE PROFILES

SCALE: Horiz 1" = 10′
Vert 1" = 10′

DP-12

REVISED BY	DATE REVISED
JOHN HUDSON	ANDRA SPECK

CALCULATED-DESIGNED BY / CHECKED BY

FUNCTIONAL SUPERVISOR: DENNIS JAGODA

STATE OF CALIFORNIA - DEPARTMENT OF TRANSPORTATION
Caltrans
HYDRAULICS

LAST REVISION 00-00-00 | DATE PLOTTED => 23-JUL-2014 | TIME PLOTTED => 14:01

Dist	COUNTY	ROUTE	POST MILES TOTAL PROJECT	SHEET No.	TOTAL SHEETS
03	ED	89	8.6/13.8	87	231

REGISTERED CIVIL ENGINEER 11-18-13 DATE

11-18-13
PLANS APPROVAL DATE

REGISTERED PROFESSIONAL ENGINEER CHRIS ROCKEY No. C78030 Exp. 9-30-15 CIVIL STATE OF CALIFORNIA

THE STATE OF CALIFORNIA OR ITS OFFICERS OR AGENTS SHALL NOT BE RESPONSIBLE FOR THE ACCURACY OR COMPLETENESS OF SCANNED COPIES OF THIS PLAN SHEET.

6

DRAINAGE QUANTITIES

REMOVE CULVERT (LF)	(N) MAX HEIGHT OF COVER (LF)	REMOVE INLET (EA)	REMOVE FLARED END SECTION (EA)	REMOVE HEADWALL (EA)	24" PRECAST CONCRETE PIPE MANHOLE (LF)	REMOVE SLOTTED CORRUGATED STEEL PIPE (LF)	REMOVE MANHOLE (EA)	15" PLASTIC PIPE (LF)	18" PLASTIC PIPE (LF)	18" CORRUGATED STEEL PIPE (.109" THICK) (LF)	24" CORRUGATED STEEL PIPE (.109" THICK) (LF)	30" CORRUGATED STEEL PIPE (.109"THICK) (LF)	17"X13" CORRUGATED STEEL PIPE ARCH (.109" THICK) (LF)	18" REINFORCED CONCRETE PIPE (LF)	12' x 8' PRECAST RCB CULVERT (LF)	MACHINE SPIRAL WOUND PVC PIPELINER (GROUTED, 36") (LF)	18" STEEL FLARED END SECTION (EA)	24" STEEL FLARED END SECTION (EA)	36" STEEL FLARED END SECTION (EA)	CLEANING, INSPECTING, AND PREPARING CULVERT (LF)	(N) HEIGHT OF INLET "H" (LF)	CABLE RAILING (LF)	MINOR CONCRETE (MINOR STRUCTURE) (CY)	MINOR CONCRETE (GUTTER DEPRESSION) (CY)	MISCELLANEOUS IRON AND STEEL (LB)	(N) BAR REINFORCING STEEL (EPOXY COATED) (LB)	ROCK SLOPE PROTECTION (LIGHT, METHOD B) (CY)	CONCRETE BACKFILL (PIPE TRENCH) (CY)	36" CORRUGATED STEEL PIPE INLET (.109" THICK) (LF)	CLASS 1 PERMEABLE MATERIAL (BLANKET) (CY)	CLASS 2 PERMEABLE MATERIAL (BLANKET) (CY)	SAND BEDDING (CY)	(N) FILTER FABRIC (CLASS A) (SQYD)	12" PERFORATED PLASTIC PIPE (LF)	18" PERFORATED PLASTIC PIPE (LF)	DESCRIPTION	STATION	DRAINAGE SHEET No.	DRAINAGE SYSTEM No.	DRAINAGE UNIT
																					5.0		1.4		239					0.4			2.2			Mod G1 DI 24-12X	"A1" 458+82.18	D-1	1	a
																								1.5												GUTTER DEPRESSION				b
									131.0																											18" PP				c
																					5.0		1.4		239					0.4			2.2			Mod G1 DI 24-12X	"A1" 460+15.72			d
																								1.5												GUTTER DEPRESSION				e
									141.0																											18" PP				f
																					5.0		3.0		478					1.1			4.7			Mod GT4 DI 24-12X	"A1" 461+61.53			g
																					5.0		3.0		478					1.1			4.7			Mod GT4 DI 24-12X	"A1" 461+69.21			h
													14.0																							17"X13" CSPA				i
																							0.3		215				3.3							OMP INLET 1/4" CHECK PL CVR	"A1" 461+68.84			j
																								2.1												GUTTER DEPRESSION				k
	0.9													55.7																						18" RCP				l
					4.5																															MH	"A1" 460+53.51	D-1	2	a
								3.3																												15" PP				b
																					4.5		1.3		239					0.4			2.2			Mod G1 DI 24-12X	"A1" 460+53.46			c
																								1.5												GUTTER DEPRESSION				d
		1																																		REMOVE INLET				e
																					5.0		1.4		239					0.4			2.2			Mod G1 DI 24-12X	"A1" 461+21.22			f
																								1.5												GUTTER DEPRESSION				g
			1																																	REMOVE FES				h
																		1																		FES				i
																82.2				82.2																SPIRAL WOUND PVC PIPE LINER				j
		1																																		REMOVE INLET				k
																					6.2		3.4		478					1.1			4.7			Mod GT4 DI 24-12X	"A1" 462+44.79			l
																								1.7												GUTTER DEPRESSION				m
									133.0																											18" PP				n
																					5.0		1.4		239					0.4			2.2			Mod G1 DI 24-12X	"A1" 463+86.52			o
																								1.5												GUTTER DEPRESSION				p
								27.0																												15" PP				q
																					5.0		1.4		239					0.4			2.2			Mod G1 DI 24-12X	"A1" 464+06.37			r
																								1.5												GUTTER DEPRESSION				s
																					5.0		3.0		478					1.1			4.7			Mod GT4 DI 24-12X	"A1" 466+55.10	D-2	3	a
																								1.7												GUTTER DEPRESSION				b
																														30.4	5.6	5.6	33.6	102.0	15.0	UIG	"A1" 466+55.10			c
																														22.2	4.1	4.1	24.6	38.0	10.0	UIG	"A1" 466+55.10	D-2	4	a
																					5.0		3.0		478					1.1			4.7			Mod GT4 DI 24-12X	"A1" 466+55.10			b
		2	1		4.5			33.3	405.0				14.0	55.7		82.2			1	82.2			24.0	14.5	4039				3.3	60.5	9.7	9.7		140.0	25.0	SHEET TOTALS				

(N) NOT A SEPARATE PAY ITEM, FOR INFORMATION ONLY

6 REPLACED PER ADDENDUM No. 6 DATED JULY 24, 2014

DRAINAGE QUANTITIES

DQ-1

STATE OF CALIFORNIA - DEPARTMENT OF TRANSPORTATION
Caltrans
HYDRAULICS
FUNCTIONAL SUPERVISOR: DENNIS JAGODA
CALCULATED-DESIGNED BY: JOHN HUDSON
CHECKED BY: ANDRA SPECK
REVISED BY
DATE REVISED

LAST REVISION 02-04-13
DATE PLOTTED => 23-JUL-2014
TIME PLOTTED => 14:01

Dist	COUNTY	ROUTE	POST MILES TOTAL PROJECT	SHEET No.	TOTAL SHEETS
03	ED	89	8.6/13.8	88	231

6

REGISTERED CIVIL ENGINEER 11-18-13 DATE

11-18-13
PLANS APPROVAL DATE

REGISTERED PROFESSIONAL ENGINEER CHRIS ROCKEY No. C78030 Exp. 9-30-15 CIVIL STATE OF CALIFORNIA

THE STATE OF CALIFORNIA OR ITS OFFICERS OR AGENTS SHALL NOT BE RESPONSIBLE FOR THE ACCURACY OR COMPLETENESS OF SCANNED COPIES OF THIS PLAN SHEET.

DRAINAGE QUANTITIES

REMOVE CULVERT	(N) MAX HEIGHT OF COVER	REMOVE INLET	REMOVE FLARED END SECTION	REMOVE HEADWALL	24" PRECAST CONCRETE PIPE MANHOLE	REMOVE SLOTTED CORRUGATED STEEL PIPE	REMOVE MANHOLE	15" PLASTIC PIPE	18" PLASTIC PIPE	18" CORRUGATED STEEL PIPE (.109" THICK)	24" CORRUGATED STEEL PIPE (.109" THICK)	30" CORRUGATED STEEL PIPE (.109"THICK)	17"X13" CORRUGATED STEEL PIPE ARCH (.109" THICK)	18" REINFORCED CONCRETE PIPE	12' x 8' PRECAST RCB CULVERT	MACHINE SPIRAL WOUND PVC PIPELINER (GROUTED, 36")	18" STEEL FLARED END SECTION	24" STEEL FLARED END SECTION	36" STEEL FLARED END SECTION	CLEANING, INSPECTING, AND PREPARING CULVERT	(N) HEIGHT OF INLET "H"	CABLE RAILING	MINOR CONCRETE (MINOR STRUCTURE)	MINOR CONCRETE (GUTTER DEPRESSION)	MISCELLANEOUS IRON AND STEEL	(N) BAR REINFORCING STEEL (EPOXY COATED)	ROCK SLOPE PROTECTION (LIGHT, METHOD B)	CONCRETE BACKFILL (PIPE TRENCH)	36" CORRUGATED STEEL PIPE INLET (.109" THICK)	CLASS 1 PERMEABLE MATERIAL (BLANKET)	CLASS 2 PERMEABLE MATERIAL (BLANKET)	SAND BEDDING	(N) FILTER FABRIC (CLASS A)	12" PERFORATED PLASTIC PIPE	18" PERFORATED PLASTIC PIPE	DESCRIPTION	STATION	DRAINAGE SHEET No.	⬡ DRAINAGE SYSTEM No.	◯ DRAINAGE UNIT
LF	LF	EA	EA	EA	LF	LF	EA	LF	LF	LF	LF	LF	LF	LF	LF	LF	EA	EA	EA	LF	LF	LF	CY	CY	LB	LB	CY	CY	LF	CY	CY	CY	SQYD	LF	LF				
																								1.7												GUTTER DEPRESSION		D-2	4	c
																					5.0		3.0		478					1.1			4.7			Mod GT4 DI 24-12X	"A1" 470+88.50	D-2	5	a
																								1.7												GUTTER DEPRESSION				b
									250.1																											18" PP				c
																					5.0		3.0		478					1.1			4.7			Mod GT4 DI 24-12X	"A1" 473+48.12			d
																								1.7												GUTTER DEPRESSION				e
									58.0																											18" PP				f
																					5.0		3.0		478					1.1			4.7			Mod GT4 DI 24-12X	"A1" 472+00.00			g
																								1.7												GUTTER DEPRESSION				h
									141.0																											18" PP				i
																					5.0		1.4		239					0.4			2.2			Mod G1 DI 24-12X	"A1" 473+48.03			j
																								1.5												GUTTER DEPRESSION				k
									135.0																											18" PP				l
																					5.0		3.0		478					1.1			4.7			Mod GT4 DI 24-12X	"A1" 474+86.90			m
																								1.7												GUTTER DEPRESSION				n
4.8	2.0																																			REMOVE CULVERT				o
									12.5																											18" PP				p
		1																																		REMOVE INLET				q
																					5.0		3.0		478					1.1			4.7			Mod GT4 DI 24-12X	"A1" 475+90.23	D-2	6	a
																								1.7												GUTTER DEPRESSION				b
										29.2																										24" PP				c
																					5.0		3.0		478					1.1			4.7			Mod GT4 DI 24-12X	"A1" 477+04.41	D-2	7	a
																								1.7												GUTTER DEPRESSION				b
									13.1																											18" PP				c
									102.8																											18" PP		D-3	8	a
																					5.0		3.0		478					1.1			4.7			Mod GT4 DI 24-12X	"A1" 479+47.96			b
																								1.7												GUTTER DEPRESSION				c
									101.6																											18" PP				d
					4.5																															MANHOLE	"A1" 480+56.81			e
									57.5																											18" PP				f
																								1.7												GUTTER DEPRESSION				g
																					5.0		3.0		478					1.1			4.7			Mod GT4 DI 24-12X	"A1" 480+57.29			h
									94.6																											18" PP				i
																					5.0		1.4		239					0.4			2.2			Mod G1 DI 24-12X	"A1" 481+56.30			j
																								1.5												GUTTER DEPRESSION				k
									99.6																											18" PP				l
4.8		1			4.5				1065.8		29.2												26.8	18.3	4302					9.6						SHEET TOTALS				

(N) NOT A SEPARATE PAY ITEM, FOR INFORMATION ONLY

6 **REPLACED PER ADDENDUM No. 6 DATED JULY 24, 2014**

DRAINAGE QUANTITIES
DQ-2

STATE OF CALIFORNIA - DEPARTMENT OF TRANSPORTATION
Caltrans
HYDRAULICS

FUNCTIONAL SUPERVISOR: DENNIS JAGODA
CALCULATED-DESIGNED BY: JOHN HUDSON
CHECKED BY: ANDRA SPECK
REVISED BY
DATE REVISED

LAST REVISION 02-04-13
DATE PLOTTED => 23-JUL-2014
TIME PLOTTED => 14:01

Dist	COUNTY	ROUTE	POST MILES TOTAL PROJECT	SHEET No.	TOTAL SHEETS
03	ED	89	8.6/13.8	89	231

6

REGISTERED CIVIL ENGINEER DATE 11-18-13

11-18-13
PLANS APPROVAL DATE

REGISTERED PROFESSIONAL ENGINEER CHRIS ROCKEY No. C78030 Exp. 9-30-15 CIVIL STATE OF CALIFORNIA

THE STATE OF CALIFORNIA OR ITS OFFICERS OR AGENTS SHALL NOT BE RESPONSIBLE FOR THE ACCURACY OR COMPLETENESS OF SCANNED COPIES OF THIS PLAN SHEET.

DRAINAGE QUANTITIES

REMOVE CULVERT	(N) MAX HEIGHT OF COVER	REMOVE INLET	REMOVE FLARED END SECTION	REMOVE HEADWALL	24" PRECAST CONCRETE PIPE MANHOLE	REMOVE SLOTTED CORRUGATED STEEL PIPE	REMOVE MANHOLE	15" PLASTIC PIPE	18" PLASTIC PIPE	18" CORRUGATED STEEL PIPE (.109" THICK)	24" CORRUGATED STEEL PIPE (.109" THICK)	30" CORRUGATED STEEL PIPE (.109"THICK)	17"X13" CORRUGATED STEEL PIPE ARCH (.109" THICK)	18" REINFORCED CONCRETE PIPE	12' x 8' PRECAST RCB CULVERT	MACHINE SPIRAL WOUND PVC PIPELINER (GROUTED, 36")	18" STEEL FLARED END SECTION	24" STEEL FLARED END SECTION	36" STEEL FLARED END SECTION	CLEANING, INSPECTING, AND PREPARING CULVERT	(N) HEIGHT OF INLET "H"	CABLE RAILING	MINOR CONCRETE (MINOR STRUCTURE)	MINOR CONCRETE (GUTTER DEPRESSION)	MISCELLANEOUS IRON AND STEEL	(N) BAR REINFORCING STEEL (EPOXY COATED)	ROCK SLOPE PROTECTION (LIGHT, METHOD B)	CONCRETE BACKFILL (PIPE TRENCH)	36" CORRUGATED STEEL PIPE INLET (.109" THICK)	CLASS 1 PERMEABLE MATERIAL (BLANKET)	CLASS 2 PERMEABLE MATERIAL (BLANKET)	SAND BEDDING	(N) FILTER FABRIC (CLASS A)	12" PERFORATED PLASTIC PIPE	18" PERFORATED PLASTIC PIPE	DESCRIPTION	STATION	DRAINAGE SHEET No.	DRAINAGE SYSTEM No.	DRAINAGE UNIT
LF	LF	EA	EA	EA	LF	LF	EA	LF	LF	LF	LF	LF	LF	LF	LF	LF	EA	EA	EA	LF	LF	LF	CY	CY	LB	LB	CY	CY	LF	CY	CY	CY	SQYD	LF	LF				
																					5.0		3.0		478					1.1			4.7			Mod GT4 DI 24-12X	"A1" 482+55.08	D-3	8	m
																								1.7												GUTTER DEPRESSION				n
		1																																		REMOVE INLET		D-3	9	a
																					5.0		3.0		478					1.1			4.7			Mod GT4 DI 24-12X	"A1" 489+43.22			b
																								1.7												GUTTER DEPRESSION				c
						70.0																														REMOVE SCSP		D-4		d
							1																													REMOVE INLET (MH)				e
								95.5																												15" PP				f
																					5.0		1.4		239					0.4			2.2			Mod G1 DI 24-12X	"A1" 491+75.00			g
																								1.5												GUTTER DEPRESSION				h
						78.8																														REMOVE SCSP				i
																												21.6								CONCRETE BACKFILL				j
							1																													REMOVE INLET (MH)				k
								109.9																												15" PP				l
						59.7																														REMOVE SCSP				m
		1																																		REMOVE INLET				n
																					5.0		1.4		239					0.4			2.2			Mod G1 DI 24-12X	"A1" 492+92.08			o
																								1.5												GUTTER DEPRESSION				p
																														22.2	4.1	4.1	24.6	76.0	15.0	UIG				r
																														22.2	4.1	4.1	24.6	76.0	10.0	UIG		D-4	10	a
																					5.0		3.0		478					1.1			4.7			Mod GT4 DI 24-12X	"A1" 495+97.33			b
																								1.7												GUTTER DEPRESSION				c
																														22.1	4.1	4.1	24.5	76.0	15.0	UIG		D-4	11	a
																					5.0		3.0		478					1.1			4.7			Mod GT4 DI 24-12X	"A1" 499+33.01			b
																								1.7												GUTTER DEPRESSION				c
																														22.0	4.1	4.1	24.4	76.0	15.0	UIG		D-4	12	a
																					5.0		3.0		478					1.1			4.7			Mod GT4 DI 24-12X	"A1" 499+29.30			b
																								1.7												GUTTER DEPRESSION				c
																					5.0		3.0		478					1.1			4.7			Mod GT4 DI24-12X	"A1" 504+20.00	D-5	13	a
																								1.7												GUTTER DEPRESSION				b
																														22.0	4.1	4.1	24.4	76.0	15.0	UIG				c
									307.7																											18" PP				d
																					5.0		1.4		239					0.4			2.2			Mod G1 DI 24-12X	"A1" 507+33.37			e
																								1.5												GUTTER DEPRESSION				f
		2				208.5	2	205.4	307.7														22.2	14.7	3585			21.6		118.3	20.5	20.5		380.0	70.0	SHEET TOTALS				

(N) NOT A SEPARATE PAY ITEM, FOR INFORMATION ONLY

6 **REPLACED PER ADDENDUM No. 6 DATED JULY 24, 2014**

DRAINAGE QUANTITIES

DQ-3

STATE OF CALIFORNIA - DEPARTMENT OF TRANSPORTATION
Caltrans
HYDRAULICS

FUNCTIONAL SUPERVISOR: DENNIS JAGODA
CALCULATED-DESIGNED BY: JOHN HUDSON
CHECKED BY: ANDRA SPECK
REVISED BY
DATE REVISED

LAST REVISION 02-04-13
DATE PLOTTED => 23-JUL-2014
TIME PLOTTED => 14:01

Dist	COUNTY	ROUTE	POST MILES TOTAL PROJECT	SHEET No.	TOTAL SHEETS
03	ED	89	8.6/13.8	90	231

6

REGISTERED CIVIL ENGINEER 11-18-13 DATE

11-18-13
PLANS APPROVAL DATE

REGISTERED PROFESSIONAL ENGINEER CHRIS ROCKEY No. C78030 Exp. 9-30-15 CIVIL STATE OF CALIFORNIA

THE STATE OF CALIFORNIA OR ITS OFFICERS OR AGENTS SHALL NOT BE RESPONSIBLE FOR THE ACCURACY OR COMPLETENESS OF SCANNED COPIES OF THIS PLAN SHEET.

DRAINAGE QUANTITIES

REMOVE CULVERT (LF)	(N) MAX HEIGHT OF COVER (LF)	REMOVE INLET (EA)	REMOVE FLARED END SECTION (EA)	REMOVE HEADWALL (EA)	24" PRECAST CONCRETE PIPE MANHOLE (LF)	REMOVE SLOTTED CORRUGATED STEEL PIPE (LF)	REMOVE MANHOLE (EA)	15" PLASTIC PIPE (LF)	18" PLASTIC PIPE (LF)	18" CORRUGATED STEEL PIPE (.109" THICK) (LF)	24" CORRUGATED STEEL PIPE (.109" THICK) (LF)	30" CORRUGATED STEEL PIPE (.109"THICK) (LF)	17"X13" CORRUGATED STEEL PIPE ARCH (.109" THICK) (LF)	18" REINFORCED CONCRETE PIPE (LF)	12' x 8' PRECAST RCB CULVERT (LF)	MACHINE SPIRAL WOUND PVC PIPELINER (GROUTED, 36") (LF)	18" STEEL FLARED END SECTION (EA)	24" STEEL FLARED END SECTION (EA)	36" STEEL FLARED END SECTION (EA)	CLEANING, INSPECTING, AND PREPARING CULVERT (LF)	(N) HEIGHT OF INLET "H" (LF)	CABLE RAILING (LF)	MINOR CONCRETE (MINOR STRUCTURE) (CY)	MINOR CONCRETE (GUTTER DEPRESSION) (CY)	MISCELLANEOUS IRON AND STEEL (LB)	(N) BAR REINFORCING STEEL (EPOXY COATED) (LB)	ROCK SLOPE PROTECTION (LIGHT, METHOD B) (CY)	CONCRETE BACKFILL (PIPE TRENCH) (CY)	36" CORRUGATED STEEL PIPE INLET (.109" THICK) (LF)	CLASS 1 PERMEABLE MATERIAL (BLANKET) (CY)	CLASS 2 PERMEABLE MATERIAL (BLANKET) (CY)	SAND BEDDING (CY)	(N) FILTER FABRIC (CLASS A) (SQYD)	12" PERFORATED PLASTIC PIPE (LF)	18" PERFORATED PLASTIC PIPE (LF)	DESCRIPTION	STATION	DRAINAGE SHEET No.	DRAINAGE SYSTEM No.	DRAINAGE UNIT
																											22.0	4.1	4.1	24.4	76.0	15.0	UIG	"A1" 507+33.37	D-5	13	g
																					5.0		3.0		478						1.1			4.7			Mod GT4 DI 24-12X	"A1" 505+26.30	D-5	14	a
																								1.7											GUTTER DEPRESSION				b
																											22.4	4.2	4.2	24.9	76.0	15.0	UIG				c
																					5.0		3.0		478						1.1			4.7			Mod GT4 DI 24-12X	"A1" 508+02.00	D-5	15	a
																								1.7											GUTTER DEPRESSION				b
																											22.4	4.2	4.2	24.9	76.0	15.0	UIG				c
																					5.0		1.4		239						0.4			2.2			Mod G1 DI 24-12X	"A1" 509+98.74	D-5	16	a
																								1.5											GUTTER DEPRESSION				b
								61.9																											15" PP				c
																											22.7	4.2	4.2	25.2	76.0	15.0	UIG				d
																					5.0		1.4		239						0.4			2.2			Mod G1 DI 24-12X	"A1" 509+36.13			e
																								1.5											GUTTER DEPRESSION				f
									78.5																										18" PP				g
																					5.0		1.4		239						0.4			2.2			Mod G1 DI 24-12X	"A1" 510+21.04			h
																								1.5											GUTTER DEPRESSION				i
			1																																REMOVE FES		D-6	17	a
68.6	3.7																																		REMOVE CULVERT				b
																		1																	24" FES				c
											92.4																								24" CSP				d
																					5.0		0.4		215				5.0		0.4			2.3			Mod GMP DI 36RX	"A1" 527+81.33	D-7	18	a
																																			* INLET DEPRESSION (AC)				b
																																			* PLACE HMA				c
																											22.0	4.1	4.1	24.4	76.0	15.0	UIG	"A1" 527+81.33			d
			1																																REMOVE FES		D-7	19	a
37.0	2.2																																		REMOVE CULVERT				b
																		1																	24" FES				c
											49.5																								24" CSP				d
		1																																	REMOVE INLET		D-8	20	a
73.4	4.3																																		REMOVE CULVERT				b
																					5.0		0.7		645				10.0		1.1			6.8			Mod GMP DI, 2 EA 36RX	"A1" 570+41.87			c
									149.8																										18" PP, 2 EA				d
179.0		1	2					61.9	228.3		141.9							2					11.3	7.9	2533				15.0	116.4	20.8	20.8		380.0	75.0	SHEET TOTALS				

(N) NOT A SEPARATE PAY ITEM, FOR INFORMATION ONLY
* SEE HMA QUANTITY TABLE.

6 **REPLACED PER ADDENDUM No. 6 DATED JULY 24, 2014**

Dist	COUNTY	ROUTE	POST MILES TOTAL PROJECT	SHEET No.	TOTAL SHEETS
03	ED	89	8.6/13.8	91	231

REGISTERED CIVIL ENGINEER 11-18-13 DATE

11-18-13
PLANS APPROVAL DATE

REGISTERED PROFESSIONAL ENGINEER CHRIS ROCKEY No. C78030 Exp. 9-30-15 CIVIL STATE OF CALIFORNIA

THE STATE OF CALIFORNIA OR ITS OFFICERS OR AGENTS SHALL NOT BE RESPONSIBLE FOR THE ACCURACY OR COMPLETENESS OF SCANNED COPIES OF THIS PLAN SHEET.

6

DRAINAGE QUANTITIES

REMOVE CULVERT	MAX HEIGHT OF COVER (N)	REMOVE INLET	REMOVE FLARED END SECTION	REMOVE HEADWALL	24" PRECAST CONCRETE PIPE MANHOLE	REMOVE SLOTTED CORRUGATED STEEL PIPE	REMOVE MANHOLE	15" PLASTIC PIPE	18" PLASTIC PIPE	18" CORRUGATED STEEL PIPE (.109" THICK)	24" CORRUGATED STEEL PIPE (.109" THICK)	30" CORRUGATED STEEL PIPE (.109"THICK)	17"X13" CORRUGATED STEEL PIPE ARCH (.109" THICK)	18" REINFORCED CONCRETE PIPE	12' x 8' PRECAST RCB CULVERT	MACHINE SPIRAL WOUND PVC PIPELINER (GROUTED, 36")	18" STEEL FLARED END SECTION	24" STEEL FLARED END SECTION	36" STEEL FLARED END SECTION	CLEANING, INSPECTING, AND PREPARING CULVERT	HEIGHT OF INLET "H" (N)	CABLE RAILING	MINOR CONCRETE (MINOR STRUCTURE)	MINOR CONCRETE (GUTTER DEPRESSION)	MISCELLANEOUS IRON AND STEEL	BAR REINFORCING STEEL (EPOXY COATED) (N)	ROCK SLOPE PROTECTION (LIGHT, METHOD B)	CONCRETE BACKFILL (PIPE TRENCH)	36" CORRUGATED STEEL PIPE INLET (.109" THICK)	CLASS 1 PERMEABLE MATERIAL (BLANKET)	CLASS 2 PERMEABLE MATERIAL (BLANKET)	SAND BEDDING	FILTER FABRIC (CLASS A) (N)	12" PERFORATED PLASTIC PIPE	18" PERFORATED PLASTIC PIPE	DESCRIPTION	STATION	DRAINAGE SHEET No.	DRAINAGE SYSTEM No.	DRAINAGE UNIT
LF	LF	EA	EA	EA	LF	LF	EA	LF	LF	LF	LF	LF	LF	LF	LF	LF	EA	EA	EA	LF	LF	LF	CY	CY	LB	LB	CY	CY	LF	CY	CY	CY	SQYD	LF	LF				
																							2.3													TRIPLE STRAIGHT HEADWALL	"A1" 575+09.73	D-8	21	a
											6.0																									24" CSP, 3 EA				b
																							2.3													TRIPLE STRAIGHT HEADWALL	"A1" 575+02.51			c
											6.0																									24" CSP, 3 EA		D-9	22	a
																							2.3													TRIPLE STRAIGHT HEADWALL	"A1" 582+41.88			b
																							2.3													TRIPLE STRAIGHT HEADWALL	"A1" 582+34.00			c
																	1																			18" FES				d
								145.5																												15" PP				e
					6.0																6.0															MANHOLE	"A1" 584+09.77			f
								300.5																												15" PP				g
																								1.5												GUTTER DEPRESSION				h
																					5.0		1.4		239					0.4			2.2			Mod G1 DI 24-12X	"A1" 587+13.77			i
								148.9																												15" PP				j
																								1.5												GUTTER DEPRESSION				k
																					5.0		1.4		239					0.4			2.2			Mod G1 DI 24-12X	"A1" 588+65.26			l
								79.6																												15" PP				m
																								1.5												GUTTER DEPRESSION				n
																					5.0		1.4		239					0.4			2.2			Mod G1 DI 24-12X	"A1" 589+47.81			o
								84.3																												15" PP				p
																								1.7												GUTTER DEPRESSION				q
																					5.0		3.0		478					1.1			4.7			Mod GT4 DI 24-12X	"A1" 590+36.48			r
																							1.2													SINGLE STRAIGHT HEADWALL		D-10	23	a
35.5	2.2																																			REMOVE CULVERT				b
											51.4																									24" CSP	"A1" 619+90.78			c
																																				24" FES				d
28.1	1.9																																			REMOVE CULVERT		D-10	24	a
																							0.9													SINGLE STRAIGHT HEADWALL	"A1" 627+59.16			b
										30.9																										18" CSP				c
																							0.9													SINGLE STRAIGHT HEADWALL	"A1" 627+57.57			d
36.4	2.1																																			REMOVE CULVERT		D-11	25	a
												38.8																								30" CSP				b
29.9	3.0																																			REMOVE CULVERT		D-11	26	a
																							0.9													SINGLE STRAIGHT HEADWALL	"A1" 645+59.31			b
										33.9																										18" CSP				c
129.9					6.0			758.8		64.8	63.4	38.8					1						20.3	6.2	1195					2.3							SHEET TOTALS				

(N) NOT A SEPARATE PAY ITEM, FOR INFORMATION ONLY

6 **REPLACED PER ADDENDUM No. 6 DATED JULY 24, 2014**

DRAINAGE QUANTITIES DQ-5

STATE OF CALIFORNIA - DEPARTMENT OF TRANSPORTATION
Caltrans
HYDRAULICS

FUNCTIONAL SUPERVISOR: DENNIS JAGODA
CALCULATED-DESIGNED BY: JOHN HUDSON
CHECKED BY: ANDRA SPECK
REVISED BY
DATE REVISED

LAST REVISION 02-04-13
DATE PLOTTED => 23-JUL-2014
TIME PLOTTED => 14:01

Dist	COUNTY	ROUTE	POST MILES TOTAL PROJECT	SHEET No.	TOTAL SHEETS
03	ED	89	8.6/13.8	92	231

6

REGISTERED CIVIL ENGINEER 11-18-13 DATE

11-18-13
PLANS APPROVAL DATE

REGISTERED PROFESSIONAL ENGINEER CHRIS ROCKEY No. C78030 Exp. 9-30-15 CIVIL STATE OF CALIFORNIA

THE STATE OF CALIFORNIA OR ITS OFFICERS OR AGENTS SHALL NOT BE RESPONSIBLE FOR THE ACCURACY OR COMPLETENESS OF SCANNED COPIES OF THIS PLAN SHEET.

DRAINAGE QUANTITIES

REMOVE CULVERT (LF)	(N) MAX HEIGHT OF COVER (LF)	REMOVE INLET (EA)	REMOVE FLARED END SECTION (EA)	REMOVE HEADWALL (EA)	24" PRECAST CONCRETE PIPE MANHOLE (LF)	REMOVE SLOTTED CORRUGATED STEEL PIPE (LF)	REMOVE MANHOLE (EA)	15" PLASTIC PIPE (LF)	18" PLASTIC PIPE (LF)	18" CORRUGATED STEEL PIPE (.109" THICK) (LF)	24" CORRUGATED STEEL PIPE (.109" THICK) (LF)	30" CORRUGATED STEEL PIPE (.109"THICK) (LF)	17"X13" CORRUGATED STEEL PIPE ARCH (.109" THICK) (LF)	18" REINFORCED CONCRETE PIPE (LF)	12' x 8' PRECAST RCB CULVERT (LF)	MACHINE SPIRAL WOUND PVC PIPELINER (GROUTED, 36") (LF)	18" STEEL FLARED END SECTION (EA)	24" STEEL FLARED END SECTION (EA)	36" STEEL FLARED END SECTION (EA)	CLEANING, INSPECTING, AND PREPARING CULVERT (LF)	(N) HEIGHT OF INLET "H" (LF)	CABLE RAILING (LF)	MINOR CONCRETE (MINOR STRUCTURE) (CY)	MINOR CONCRETE (GUTTER DEPRESSION) (CY)	MISCELLANEOUS IRON AND STEEL (LB)	(N) BAR REINFORCING STEEL (EPOXY COATED) (LB)	ROCK SLOPE PROTECTION (LIGHT, METHOD B) (CY)	CONCRETE BACKFILL (PIPE TRENCH) (CY)	36" CORRUGATED STEEL PIPE INLET (.109" THICK) (LF)	CLASS 1 PERMEABLE MATERIAL (BLANKET) (CY)	CLASS 2 PERMEABLE MATERIAL (BLANKET) (CY)	SAND BEDDING (CY)	(N) FILTER FABRIC (CLASS A) (SQYD)	12" PERFORATED PLASTIC PIPE (LF)	18" PERFORATED PLASTIC PIPE (LF)	DESCRIPTION	STATION	DRAINAGE SHEET No.	DRAINAGE SYSTEM No.	DRAINAGE UNIT
																							0.9													SINGLE STRAIGHT HW	"A1" 645+59.31	D-11	26	d
										35.5																									18" CSP		D-12	27	a
																							0.9													SINGLE STRAIGHT HW	"A1" 649+84.29			b
																		1																	24" FES		D-13	28	a
											54.7																								24" CSP				b
																		1																	24" FES				c
		1																																	REMOVE INLET		D-14	29	a
41.9	2.6																																		REMOVE CULVERT				b
			1																																REMOVE FES				c
																					3.4		1.3		239										GO DI, 24-12X	"A1" 693+50.58			d
										43.5																									18" CSP				e
																	1																		18" FES				f
			1																																REMOVE FES		D-14	30	a
34.0	2.2																																		REMOVE CULVERT				b
																			1																24" FES				c
											34.3																								24" CSP				d
52.0	7.4																																		REMOVE CULVERT		D-15	31	a
				1																															REMOVE HEADWALL				b
				1																															REMOVE HEADWALL				c
																							19.5			1716									WINGWALL				d
															72.0											14225									12'X8' BOX CULVERT				e
																							19.5			1716									WINGWALL				f
																											64								RSP (LIGHT, METHOD B)				g
																						46.0													CABLE RAILING				h
																						46.0													CABLE RAILING				i
			1																																REMOVE FES		D-15	32	a
36.0	2.2																																		REMOVE CULVERT				b
																		1																	24" FES				c
											35.4																								24" CSP				d
163.9		1	3	2						79.0	124.4				72.0		1	3	1			92.0	42.1		239	17657	64								SHEET TOTALS				

(N) NOT A SEPARATE PAY ITEM, FOR INFORMATION ONLY

6 **REPLACED PER ADDENDUM No. 6 DATED JULY 24, 2014**

DRAINAGE QUANTITIES

DQ-6

STATE OF CALIFORNIA - DEPARTMENT OF TRANSPORTATION
Caltrans
HYDRAULICS

FUNCTIONAL SUPERVISOR: DENNIS JAGODA
CALCULATED-DESIGNED BY: JOHN HUDSON
CHECKED BY: ANDRA SPECK
REVISED BY
DATE REVISED

LAST REVISION 02-04-13
DATE PLOTTED => 23-JUL-2014
TIME PLOTTED => 14:01

Dist	COUNTY	ROUTE	POST MILES TOTAL PROJECT	SHEET No.	TOTAL SHEETS
03	ED	89	8.6/13.8	93	231

REGISTERED CIVIL ENGINEER 11-18-13 DATE

11-18-13
PLANS APPROVAL DATE

REGISTERED PROFESSIONAL ENGINEER CHRIS ROCKEY No. C78030 Exp. 9-30-15 CIVIL STATE OF CALIFORNIA

THE STATE OF CALIFORNIA OR ITS OFFICERS OR AGENTS SHALL NOT BE RESPONSIBLE FOR THE ACCURACY OR COMPLETENESS OF SCANNED COPIES OF THIS PLAN SHEET.

6 4

6 REPLACED PER ADDENDUM No. 6 DATED JULY 24, 2014

DRAINAGE QUANTITIES

	REMOVE CULVERT	(N) MAX HEIGHT OF COVER	REMOVE INLET	REMOVE FLARED END SECTION	REMOVE HEADWALL	24" PRECAST CONCRETE PIPE MANHOLE	REMOVE SLOTTED CORRUGATED STEEL PIPE	REMOVE MANHOLE	8" PLASTIC PIPE	12" PLASTIC PIPE	15" PLASTIC PIPE	18" PLASTIC PIPE	18" CORRUGATED STEEL PIPE (.109" THICK)	24" CORRUGATED STEEL PIPE (.109" THICK)	30" CORRUGATED STEEL PIPE (.109"THICK)	17"X13" CORRUGATED STEEL PIPE ARCH (.109" THICK)	18" REINFORCED CONCRETE PIPE	12' x 8' PRECAST RCB CULVERT	MACHINE SPIRAL WOUND PVC PIPELINER (GROUTED, 36")	18" STEEL FLARED END SECTION	24" STEEL FLARED END SECTION	36" STEEL FLARED END SECTION	CLEANING, INSPECTING, AND PREPARING CULVERT	(N) HEIGHT OF INLET "H"	* CABLE RAILING	* MINOR CONCRETE (MINOR STRUCTURE)	MINOR CONCRETE (GUTTER DEPRESSION)	MISCELLANEOUS IRON AND STEEL	(N) BAR REINFORCING STEEL (EPOXY COATED)	ROCK SLOPE PROTECTION (LIGHT, METHOD B)	CONCRETE BACKFILL (PIPE TRENCH)	36" CORRUGATED STEEL PIPE INLET (.109" THICK)	CLASS 1 PERMEABLE MATERIAL (BLANKET)	CLASS 2 PERMEABLE MATERIAL (BLANKET)	SAND BEDDING	(N) FILTER FABRIC (CLASS A)	12" PERFORATED PLASTIC PIPE	18" PERFORATED PLASTIC PIPE
	LF	LF	EA	EA	EA	LF	LF	EA	LF	LF	LF	LF	LF	LF	LF	LF	LF	LF	LF	EA	EA	EA	LF	LF	LF	CY	CY	LB	LB	CY	CY	LF	CY	CY	CY	SQYD	LF	LF
SHEET DQ-1			2	1		4.5					33.3	405.0				14.0	55.7		82.2			1	82.2			24.0	14.5	4039				3.3	60.5	9.7	9.7		140.0	25.0
SHEET DQ-2	4.8		1			4.5						1065.8		29.2												26.8	18.3	4302					9.6					
SHEET DQ-3			2				208.5	2			205.4	307.7														22.2	14.7	3585			21.6		118.3	20.5	20.5		380.0	70.0
SHEET DQ-4	179.0		1	2							61.9	228.3		141.9							2					11.3	7.9	2533				15.0	116.4	20.8	20.8		380.0	75.0
SHEET DQ-5	129.9					6.0					758.8		64.8	63.4	38.8					1						20.3	6.2	1195					2.3					
SHEET DQ-6	163.9		1	3	2								79.0	124.4				72.0		1	3	1			92.0	42.1		239	17657	64								
4									8.0	8.3	80.5	82.0														3.8	6.8	956					1.6					
TOTAL:	477.6		7	6	2	15.0	208.5	2	8.0	8.3	1139.9	2088.8	143.8	358.9	38.8	14.0	55.7	72.0	82.2	2	5	2	82.2		92.0	150.5	68.4	16849	17657	64	21.6	18.3	308.7	51.0	51.0		900.0	170.0

(N) NOT A SEPARATE PAY ITEM, FOR INFORMATION ONLY

* FOR TOTALS SEE SUMMARY OF ROADWAY QUANTITIES.

4

8" PLASTIC PIPE	12" PLASTIC PIPE	15" PLASTIC PIPE	18" PLASTIC PIPE	(N) HEIGHT OF INLET "H"	MINOR CONCRETE (MINOR STRUCTURE)	MINOR CONCRETE (GUTTER DEPRESSION)	MISCELLANEOUS IRON AND STEEL	CLASS 1 PERMEABLE MATERIAL (BLANKET)	(N) FILTER FABRIC (CLASS A)	DESCRIPTION	STATION	DRAINAGE SHEET No.	DRAINAGE SYSTEM No.	DRAINAGE UNIT
LF	LF	LF	LF	LF	CY	CY	LB	CY	SQYD					
						1.7				GUTTER DEPRESSION		D-2	5	r
				3.7	1.1		239	0.4	2.2	Mod G1 DI 24-12X	"A1" 472+63.00			s
8.0										8" PP				t
				1.5	0.9		239	0.4	2.2	Mod G1 DI 24-12X	"A1" 472+63.00			u
						1.7				GUTTER DEPRESSION				v
			82.0							18" PP				w
						1.7				GUTTER DEPRESSION				x
				2.5	0.9		239	0.4	2.2	Mod G1 DI 24-12X	"A1" 471+15.00			y
	8.3									12" PP				z
						1.7				GUTTER DEPRESSION				aa
				1.8	0.9		239	0.4	2.2	Mod G1 DI 24-12X	"A1" 471+15.00			bb
		80.5								15" PP				cc
8.0	8.3	80.5	82.0		3.8	6.8	956	1.6		SUBTOTAL				

HMA QUANTITIES

DRAINAGE SYSTEM No.	DRAINAGE UNIT	* PLACE HOT MIX ASPHALT (MISCELLANEOUS AREA)	HOT MIX ASPHALT (TYPE A)*
		SQYD	TON
18	b		35.8
18	c	106.3	
SUBTOTAL:		106.3	35.8

4 REPLACED PER ADDENDUM No. 4 DATED JULY 10, 2014

DRAINAGE QUANTITIES

DQ-7

STATE OF CALIFORNIA - DEPARTMENT OF TRANSPORTATION
Caltrans
HYDRAULICS

FUNCTIONAL SUPERVISOR: DENNIS JAGODA
CALCULATED-DESIGNED BY: JOHN HUDSON
CHECKED BY: ANDRA SPECK
REVISED BY
DATE REVISED

LAST REVISION 02-04-13
DATE PLOTTED => 23-JUL-2014
TIME PLOTTED => 14:01

Dist	COUNTY	ROUTE	POST MILES TOTAL PROJECT	SHEET No.	TOTAL SHEETS
03	ED	89	8.6/13.8	110	231

Jack R. Cowell Jr. 11-18-13
REGISTERED CIVIL ENGINEER DATE

11-18-13
PLANS APPROVAL DATE

REGISTERED PROFESSIONAL ENGINEER JACK COWELL No. 65521 Exp. 9-30-15 CIVIL STATE OF CALIFORNIA

THE STATE OF CALIFORNIA OR ITS OFFICERS OR AGENTS SHALL NOT BE RESPONSIBLE FOR THE ACCURACY OR COMPLETENESS OF SCANNED COPIES OF THIS PLAN SHEET.

NOTES:

1. FOR ACCURATE RIGHT OF WAY DATA, CONTACT RIGHT OF WAY ENGINEERING AT THE DISTRICT OFFICE.
2. USE STANDARD PLAN T13 FOR TEMPORARY TRAFFIC CONTROL.
3. TEMPORARY RAILING (TYPE K) TO BE PIN CONNECTED.
4. EXACT PLACEMENT OF STAGE CONSTRUCTION ITEMS TO BE DETERMINED IN THE FIELD BY THE ENGINEER.
5. STAGE-1A TO BE COMPLETED BEFORE STAGE-1.
6. STAGE WORK IS TO BE PERFORMED AFTER LABOR DAY AND BEFORE OCTOBER 10TH.

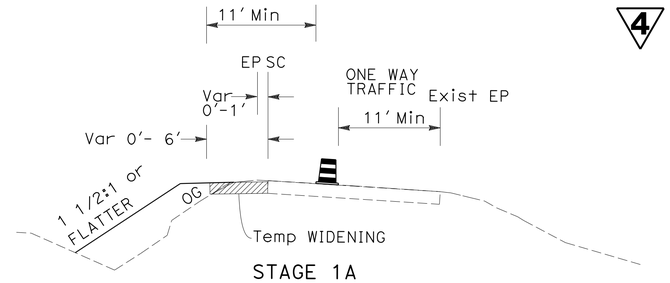

STAGE 1A
ONE WAY REVERSIBLE CONTROL

LEGEND:

- Temp WIDENING
- CONSTRUCT THIS PHASE
- TRAFFIC PLASTIC DRUM
- TYPE-III BARRICADE
- TEMPORARY CRASH CUSHION MODULE (TYPE-U-11)

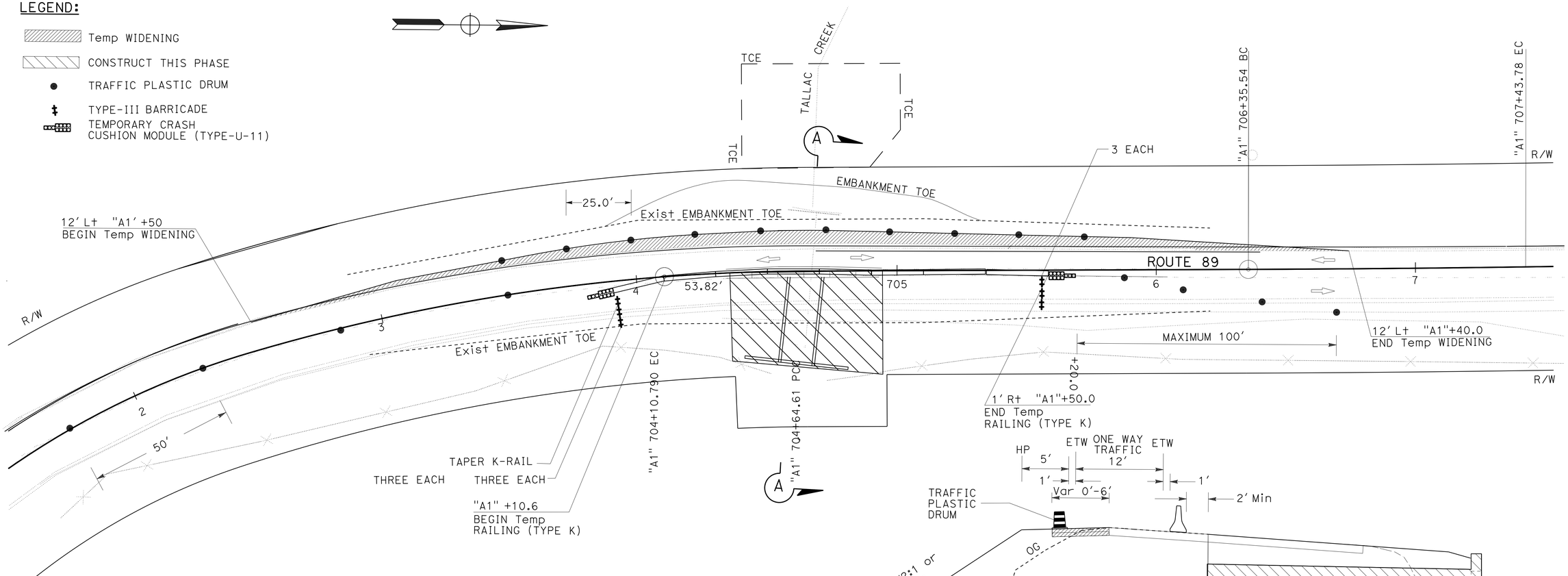

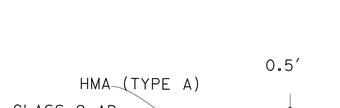

Temp WIDENING
STRUCTURAL SECTION

SECTION A-A

6 TEMPORARY ITEMS

ITEM	QUANTITY		
	SC-1	SC-2	TOTAL
ROADWAY EXCAVATION	47.0		47.0 CY*
HOT MIX ASPHALT (TYPE A)	68.7		68.7 TONS*
CLASS 2 AB	102.2		102.2 CY*
TYPE III BARRICADE	6	6	6 EA
Temp RAILING (TYPE K)	160	160	160 FT
TRAFFIC PLASTIC DRUM	20	20	20 EA
TEMPORARY CRASH CUSHION MODULE (TYPE U11)	2	2	2 EA

* FOR PROJECT TOTALS SEE SUMMARY OF QUANTITIES.

6 REPLACED PER ADDENDUM No. 6 DATED JULY 24, 2014

4 REPLACED PER ADDENDUM No. 4 DATED JULY 10, 2014

STAGE CONSTRUCTION ONE WAY REVERSIBLE TRAFFIC CONTROL STAGE-1

NO SCALE

SC-1

STATE OF CALIFORNIA - DEPARTMENT OF TRANSPORTATION
Caltrans DESIGN
FUNCTIONAL SUPERVISOR: MASTRI ALVANDI
CALCULATED-DESIGNED BY: JACK COWELL
CHECKED BY: MASTRI ALVANDI
REVISED BY
DATE REVISED

LAST REVISION 02-04-13
DATE PLOTTED => 23-JUL-2014
TIME PLOTTED => 14:01

6 REPLACED PER ADDENDUM No. 6 DATED JULY 24, 2014

4

Dist	COUNTY	LOCATION CODE	POST MILES TOTAL PROJECT	SHEET No.	TOTAL SHEETS
03	ED	89	8.6/13.8	159	231

Jack R. Cowell Jr. 11-18-13
REGISTERED CIVIL ENGINEER DATE

11-18-13
PLANS APPROVAL DATE

REGISTERED PROFESSIONAL ENGINEER JACK COWELL No. 65521 Exp. 9-30-15 CIVIL STATE OF CALIFORNIA

THE STATE OF CALIFORNIA OR ITS OFFICERS OR AGENTS SHALL NOT BE RESPONSIBLE FOR THE ACCURACY OR COMPLETENESS OF SCANNED COPIES OF THIS PLAN SHEET.

ROADWAY QUANTITIES

STATION/LOCATION	HOT MIX ASPHALT (TYPE A)	PLACE HOT MIX ASPHALT (Misc AREA)	TACK COAT	CLASS 2 AGGREGATE BASE	COLD PLANE ASPHALT CONCRETE PAVEMENT	SHOULDER BACKING	ROADWAY EXCAVATION**	(N) EMBANKMENT	GEOSYNTHETIC REINFORCEMENT	REMOVE BASE AND SURFACING	REMOVE CONCRETE (CURB AND GUTTER)	PRE/POST CONSTRUCTION SURVEYS	ROCK SLOPE PROTECTION (LIGHT, METHOD B)	ROCK SLOPE PROTECTION FABRIC (CLASS 8)
	TON	SQYD	TON	CY	SQYD	TON	CY	CY	SQYD	CY	LF	EA	CY	SQYD
"A1" 456+49.50 TO 459+89.40	410.5		1.15		2,209.4		126.0	4.0						
"A1" 459+89.40 TO 484+03.40	3,011.1		7.99	357.6	13,947.1		1,495.0	374.0						
"A1" 484+03.40 TO 490+29.60	654.8		2.04		3,896.4		193.0	189.0					6.0	22.0
"A1" 490+29.60 TO 493+10.00	337.4		0.89	41.5	1,557.8		198.0	213.0						
"A1" 493+10.00 TO 510+15.00	2,010.0		5.33	252.6	10,609.0		983.0	886.0						
"A1" 510+15.00 TO 517+50.00	709.9		2.39	108.9	4,165.0	479.7	472.0	42.0						
"A1" 517+50.00 TO 522+20.00	212.1		1.17				146.0	147.0						
"A1" 522+20.00 TO 527+89.00	379.0		1.04				242.0	187.0						
"A1" 527+89.00 TO 587+00.00	4,592.9		9.63	2,189.3		495.3	3,072.0	661.0						
"A1" 587+00.00 TO 591+53.91	483.9		1.00	242.2	1667.0		428.0	33.0						
"A1" 591+53.91 TO 613+44.00	1,546.2		3.24	737.0		236.1	1,330.0	187.0						
"A1" 613+44.00 TO 619+40.00	573.4		1.34	176.6		71.5	625.0	28.0						
"A1" 619+40.00 TO 627+00.00	590.5		1.24	281.5		79.2	370.0	116.0						
"A1" 700+59.00 TO 701+09.00					133.0									
"A1" 701+09.00 TO 704+14.00	278.3		1.20	128.3			601.0	115.0						
"A1" 704+14.00 TO 704+39.00	54.6		0.02	27.9			18.0	35.0						
"A1" 704+39.00 TO 704+89.00	103.8		0.00	50.3			52.0	173.0						
"A1" 704+89.00 TO 707+85.00	107.6		0.03	52.4	155.0		113.0	166.0	225.0					
PAVED PULLOUTS														
"A1" 585+46.80 TO 587+10.60 Lt	59.7			84.5										
"A1" 632+50.00 TO 633+62.00 Lt	60.4			58.1										
"A1" 684+00.00 TO 685+40.00 Lt	68.1			72.6										
"A1" 528+20.58 TO 532+27.50 Rt	402.9			226.1										
"A1" 565+50.00 TO 567+50.00 Rt	66.7			103.7										
"A1" 585+45.60 TO 587+12.00 Rt	59.6			86.6										
"A1" 597+45.93 TO 599+90.60 Rt	215.4			126.9										
"A1" 609+50.00 TO 611+50.00 Rt	72.2			103.7										
"A1" 652+06.00 TO 654+06.00 Rt	121.1			103.7										
REMOVAL ITEMS														
"A1" 475+02.6 TO 475+23.3 Lt											25.0			
"A1" 475+52.9 TO 478+81.2 Lt											297.0			
"A1" 482+19.05 TO 484+32.3 Rt											220.0			
"A1" 461+12.9 TO 461+43.2 Rt										11.3				
"A1" 492+73.54 TO 492+94.95 Rt											37.0			
"A1" 493+24.41 TO 493+45.59 Rt											32.0			
"A1" 499+38.61 TO 499+58.94 Rt											30.0			
"A1" 499+38.61 TO 499+58.94 Rt											30.0			
"A1" 517+50 TO 526+95 Lt										317.5				
"A1" 517+50 TO 528+50 Rt										325.5				
"A1" 581+06.9 TO 581+44.8 Lt										40.0				
"A1" 583+39.11 TO 583+68.04 Rt										24.1				
CLASS 2AB ITEMS (FROM Sht Q-3)				1,374.2										
DRIVEWAY CONFORMS (FROM Sht Q-4)	350.0	1,929.9	0.29		1,716.3							54		
HMA SIDEWALKS (FROM Sht Q-4)	837.8	3,811.2	0.498	635.5										
CURB RAMP Qtys (FROM Sht Q-5)				96.1								29		
HMA FOR SAFETY EDGE(FROM Sht Q-6)	313.9													
CLASS 2AB ITEMS (FROM Sht Q-6)				1.1										
TEMPORARY ITEM (FROM Sht SC-1)	68.7			102.2			6 47.0							
HMA ITEMS FROM DQ-7	35.8	106.3											64.0	
HMA ITEMS FOR AC DIKE FROM Q-6	22.2													
SUB-TOTAL								3,556.0						
TOTALS	18,810.5	5,847.4	40.49	7,821.1	40,056.0	1,361.8	10,511		225.0	718.4	671.0	83	70.0	22.0

* SEE TYPICAL CROSS SECTION X-4 FOR EXACT LOCATIONS
(N) NOT A SEPARATE PAY ITEM, FOR INFORMATION ONLY

** ROADWAY EXCAVATION FOR PAVED PULLOUTS INCLUDED IN MAINLINE QUANTITIES.

4 REPLACED PER ADDENDUM No. 4 DATED JULY 10, 2014

SUMMARY OF QUANTITIES

Q-1

STATE OF CALIFORNIA - DEPARTMENT OF TRANSPORTATION
Caltrans DESIGN

FUNCTIONAL SUPERVISOR: MASTRI ALVANDI
CALCULATED-DESIGNED BY: JACK COWELL
CHECKED BY: MASTRI ALVANDI
REVISED BY / DATE REVISED

LAST REVISION 05-23-13
DATE PLOTTED => 23-JUL-2014
TIME PLOTTED => 14:52

Dist	COUNTY	LOCATION CODE	POST MILES TOTAL PROJECT	SHEET No.	TOTAL SHEETS
03	ED	89	8.6/13.8	164	231

Jack R. Cowell Jr. 11-18-13
REGISTERED CIVIL ENGINEER DATE

11-18-13
PLANS APPROVAL DATE

REGISTERED PROFESSIONAL ENGINEER JACK COWELL No. 65521 Exp. 9-30-15 CIVIL STATE OF CALIFORNIA

THE STATE OF CALIFORNIA OR ITS OFFICERS OR AGENTS SHALL NOT BE RESPONSIBLE FOR THE ACCURACY OR COMPLETENESS OF SCANNED COPIES OF THIS PLAN SHEET.

4

NOTE: EXACT LOCATION AND DIMENSIONS TO BE DETERMINED BY ENGINEER IN THE FIELD (SEE CONSTRUCTION DETAIL).

REPLACE ASPHALT CONCRETE SURFACING

STATION/LOCATION/SIDE OF Hwy	LENGTH	WIDTH	DEPTH	REPLACE ASPHALT CONCRETE SURFACING
	LF	LF	LF	CY
"A1" 525+50 TO 526+00 R†	100.0	12.0	0.25	11.11
"A1" 587+60 TO 588+10 L†	50.0	12.0	0.25	5.56
"A1" 597+50 TO 600+00 R†	250.0	12.0	0.25	27.78
"A1" 613+15 TO 613+65 R†	50.0	12.0	0.25	5.56
TOTALS				50.01

RETAINING WALL QUANTITIES (8th St FOREBAY)

ITEM DESCRIPTION	STATION TO STATION	STRUCTURAL CONCRETE, RETAINING WALL	STRUCTURE EXCAVATION (RETAINING WALL)	STRUCTURE BACKFILL (RETAINING WALL)	BAR REINFORCEMENING STEEL (RETAINING WALL)	REMOVE RETAINING WALL (PORTION)
		CY	CY	CY	LB	CY
REMOVE RETAINING WALL	"A1" 475+81.2 TO 475+95.1					3.9
RETAINING WALL	"W1" 10+00 TO 10+15.40	9.43	10.0	10.0	638	
TOTAL		9.43	10.0	10.0	638	3.9

PLACE HOT MIX ASPHALT DIKE

SIDE	STATION TO STATION	PLACE HMA DIKE TYPE A	TYPE E	HMA-A
		LF	LF	TON
L†	"A1" 555+41.06 TO 557+30.15		189.1	4.94
L†	"A1" 565+42.83 TO 568+42.40		299.6	7.83
L†	"A1" 697+36.97 TO 700+60.37		335.4	8.80
L†	"A1" 726+61.6 TO 726+84.2	23.7		0.65
	TOTAL	23.7	824.1	22.22

CRACK TREATMENT

POST MILE BEGIN	POST MILE END	DISTANCE (MILES)	NUMBER OF LANES	CRACK TREATMENT LANE MILE
8.6	9.9	1.3	5	6.5
9.9	10.0	0.1	3	0.3
10.0	13.8	3.8	2	7.6
TOTAL				14.4

MINOR CONCRETE (SIDEWALK)

SIDE	STATION TO STATION	MINOR CONCRETE (SIDEWALK)
		CY
R†	"A1" 468+03.40 TO 468+16.40	0.79
R†	"A1" 469+27.12 TO 469+31.62	0.28
R†	"A1" 469+75.50 TO 469+83.00	0.46
L†	"A1" 471+52.54 TO 471+71.00	1.14
R†	"A1" 478+27.80 TO 478+33.40	0.34
L†	"A1" 478+80.00 TO 478+88.76	0.54
L†	"A1" 479+38.00 TO 479+50.40	0.76
R†	"A1" 480+34.00 TO 480+47.00	0.79
L†	"A1" 503+16.70 TO 503+33.50	1.03
L†	"A1" 505+22.50 TO 505+40.50	1.10
	TOTAL	7.23

SAFETY EDGE

SHEET No.	STATION TO STATION	DIRECTION	(N) TOTAL THICKNESS OF SAFETY EDGE	(N) LENGTH SAFETY EDGE	HOT MIX ASPHALT (TYPE A)
			FT	LF	TON
L-6	"A1" 517+50 TO 522+20	NB & SB	0.25	470.0	3.74
L-6	"A1" 522+20 TO 527+89	NB & SB	0.25	569	4.53
L-7 TO L-11	"A1"527+89 TO 587+00	NB & SB	0.50	5911.0	186.99
L-12 TO L-13	"A1"593+53.91 TO 613+44	NB & SB	0.50	1990.09	62.96
L-13	"A1"613+44 TO 619+40	NB & SB	0.50	760.0	24.04
L-14	"A1"619+40 TO 627+00	NB & SB	0.50	596.0	18.85
L-19 TO L-20	"A1"701+09 TO 705+14	NB & SB	0.50	405	12.81
SUBTOTAL					313.92*

*FOR TOTALS SEE SHEET Q-1

6 MINOR CONCRETE (MINOR STRUCTURE)

ITEM DESCRIPTION	STATION TO STATION	MINOR CONCRETE (MINOR STRUCTURE)	BAR REINFORCEMENT STEEL (N)	CLASS 2 AB
		CY	LB	CY
WALL CAP	"A1" 475+95.4(R†) TO 476+23.9(R†)	1.23	120	
WALL GUTTER	"W1" 10+10 TO 10+43.9	1.3		1.1*
RETAINING CURB	SUBTOTAL FROM Q-3	26.2		
	SUBTOTAL FROM DQ-7	150.5		
	SUBTOTAL	179.23	120	
	TOTAL	179.23	120	

*FOR TOTALS SEE SHEET Q-1

6 REPLACED PER ADDENDUM No. 6 DATED JULY 24, 2014

4 REPLACED PER ADDENDUM No. 4 DATED JULY 10, 2014

SUMMARY OF QUANTITIES

Q-6

STATE OF CALIFORNIA - DEPARTMENT OF TRANSPORTATION
DESIGN
Caltrans®
FUNCTIONAL SUPERVISOR: MASTRI ALVANDI
CALCULATED-DESIGNED BY: JACK COWELL
CHECKED BY: MASTRI ALVANDI
REVISED BY
DATE REVISED

LAST REVISION 05-23-13
DATE PLOTTED => 23-JUL-2014
TIME PLOTTED => 14:08