Dist	COUNTY	ROUTE	POST MILES TOTAL PROJECT	SHEET No.	TOTAL SHEETS
03	ED	89	24.9/27.2	2	116

REGISTERED CIVIL ENGINEER 6-23-14 DATE

6-23-14
PLANS APPROVAL DATE

REGISTERED PROFESSIONAL ENGINEER JOHN WELCH No. 58303 Exp. 6-30-14 CIVIL STATE OF CALIFORNIA

THE "A1"TE OF CALIFORNIA OR ITS OFFICERS OR AGENTS SHALL NOT BE RESPONSIBLE FOR THE ACCURACY OR COMPLETENESS OF SCANNED COPIES OF THIS PLAN SHEET.

NOTES:

1. DIMENSIONS OF THE PAVEMENT STRUCTURES (STRUCTURAL SECTIONS) ARE SUBJECT TO TOLERANCES SPECIFIED IN THE STANDARD SPECIFICATIONS.
2. * FOR LOCATIONS AND QUANTITIES OF EMBANKMENT, SHOULDER BACKING, SAFETY EDGE, REMOVE SAND ACCUMULATION, REPLACE AC SURFACING, DITCH EXCAVATION, CURB, AND HMA DIKE SEE CONSTRUCTION, DRAINAGE, AND QUANTITY SHEETS. (1)
3. ** SAWCUT PAVEMENT 1′ INSIDE EXISTING EP.
4. EXISTING ETW TO EXISTING EP VARIES 0′-1′.
5. FOR ACCURATE RIGHT OF WAY DATA, CONTACT RIGHT OF WAY ENGINEERING AT THE DISTRICT OFFICE.

ABBREVIATIONS:

IG	INFILTRATION GALLERY
SB	SHOULDER BACKING
SE	SAFETY EDGE
MMS	MATCH MAINLINE SLOPE
SC	SAWCUT
USFS	UNITED STATES FOREST SERVICE

STRUCTURAL SECTIONS:

1 — 0.20′ HMA-A, 0.20′ COLD PLANE AC Pvmt

2 — 0.60′ HMA-A

3 — 0.35′ HMA-A, 1.15′ CLASS 2 AB

4 — 0.25′ HMA-A

5 — 0.25′ HMA-A, 0.50′ CLASS 2 AB

6 — 0.15′ HMA-A, 0.15′ COLD PLANE AC Pvmt

ROUTE 89 DESIGN DESIGNATION

ADT (2015) = 3,870 D = 55%
ADT (2035) = 4,920 T = 3.0%
DHV (2015) = 3,870 V = 55 MPH
ESAL = 203,688 TI_{20} = 7.5
HIGH MOUNTAIN PAVEMENT CLIMATE REGION

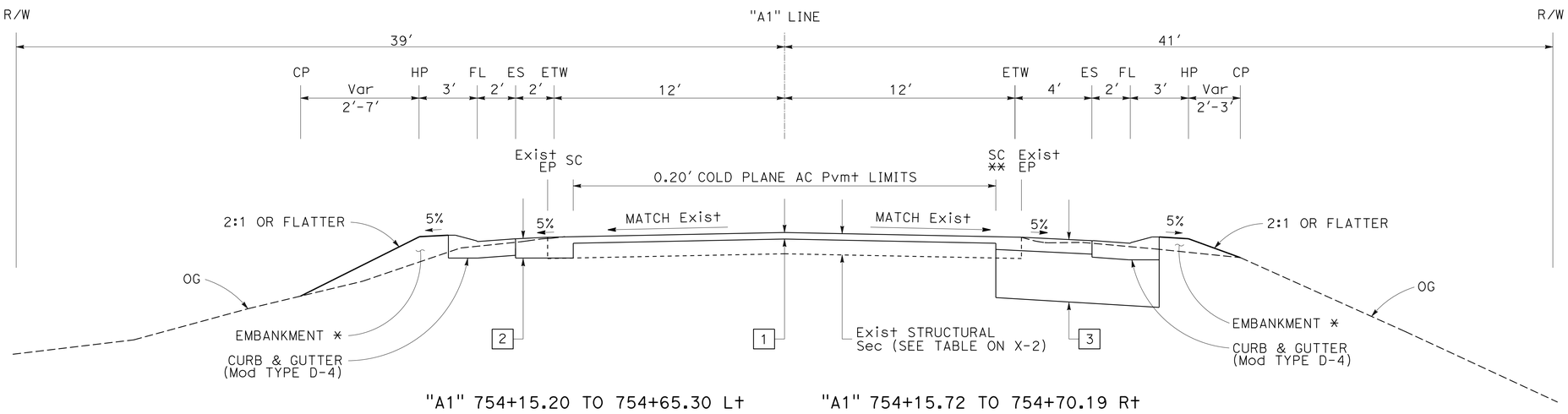

"A1" 754+15.20 TO 754+65.30 Lt "A1" 754+15.72 TO 754+70.19 Rt

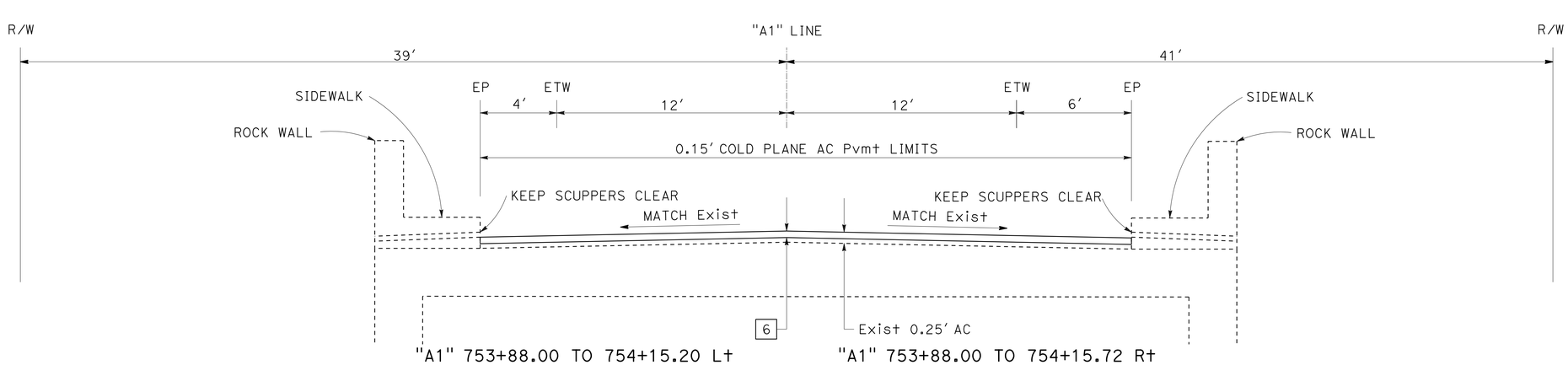

"A1" 753+88.00 TO 754+15.20 Lt "A1" 753+88.00 TO 754+15.72 Rt

MEEKS CREEK BRIDGE

TYPICAL CROSS SECTIONS

NO SCALE

ROUTE 89

(1) REPLACED PER ADDENDUM No. 1 DATED DECEMBER 4, 2014

X-1

REVISED BY | DATE REVISED
JOHN WELCH | MASTRI ALVANDI
CALCULATED-DESIGNED BY | CHECKED BY
FUNCTIONAL SUPERVISOR
MASTRI ALVANDI

"A1"TE OF CALIFORNIA - DEPARTMENT OF TRANSPORTATION
Caltrans
03-DESIGN

LAST REVISION 06-17-14 | DATE PLOTTED => 02-DEC-2014 TIME PLOTTED => 15:05

Dist	COUNTY	ROUTE	POST MILES TOTAL PROJECT	SHEET No.	TOTAL SHEETS
03	ED	89	24.9/27.2	4	116

REGISTERED CIVIL ENGINEER 6-23-14 DATE

6-23-14
PLANS APPROVAL DATE

REGISTERED PROFESSIONAL ENGINEER JOHN WELCH No. 58303 Exp. 6-30-14 CIVIL STATE OF CALIFORNIA

THE "A1"TE OF CALIFORNIA OR ITS OFFICERS OR AGENTS SHALL NOT BE RESPONSIBLE FOR THE ACCURACY OR COMPLETENESS OF SCANNED COPIES OF THIS PLAN SHEET.

1 REPLACED PER ADDENDUM No. 1 DATED DECEMBER 4, 2014

NOTES:

1. FOR * AND **, SEE NOTES ON SHEET X-1.
2. FOR ACCURATE RIGHT OF WAY DATA, CONTACT RIGHT OF WAY ENGINEERING AT THE DISTRICT OFFICE.

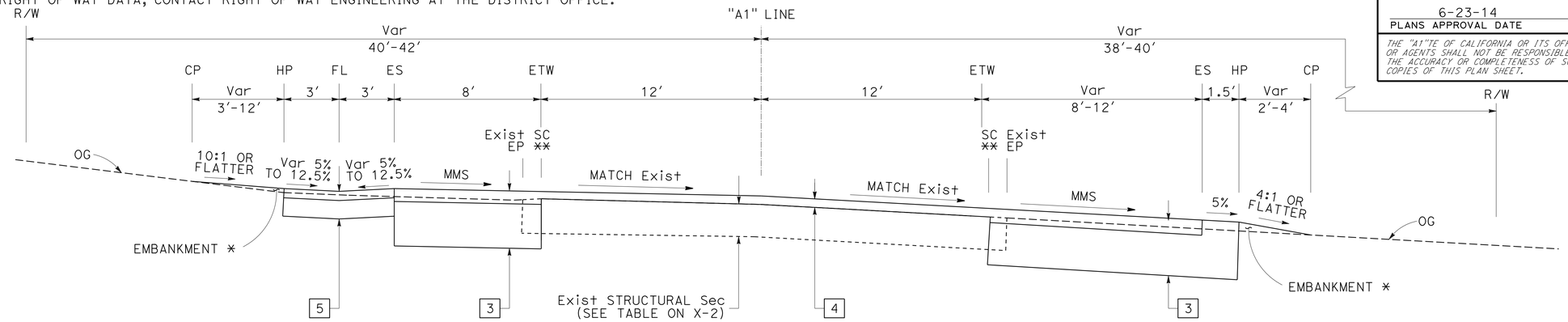

"A1" 761+13.65 TO 761+83.61

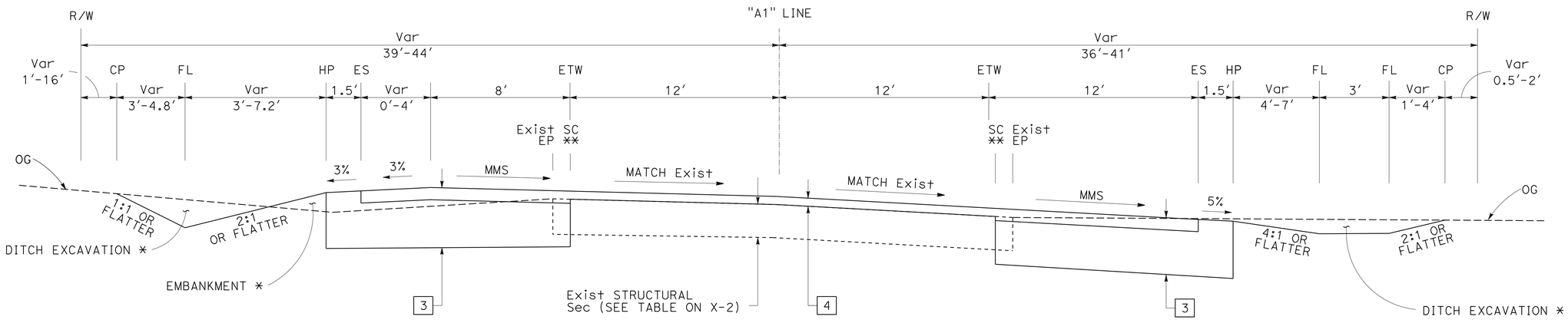

"A1" 759+56.11 TO 761+13.65

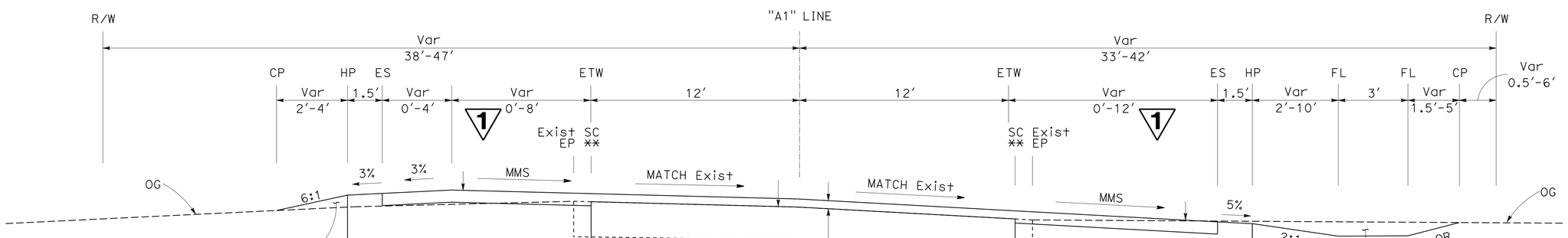

"A1" 756+43.62 TO 759+56.11

FOR USFS DRIVEWAY L+ CONFORM DETAIL, SEE SHEET C-1

TYPICAL CROSS SECTIONS

NO SCALE

ROUTE 89

X-3

REVISED BY | DATE REVISED
JOHN WELCH | MASTRI ALVANDI
CALCULATED-DESIGNED BY | CHECKED BY
FUNCTIONAL SUPERVISOR | MASTRI ALVANDI
"A1"TE OF CALIFORNIA - DEPARTMENT OF TRANSPORTATION
03-DESIGN
Caltrans

LAST REVISION 06-17-14 | DATE PLOTTED => 02-DEC-2014 | TIME PLOTTED => 15:05

Dist	COUNTY	ROUTE	POST MILES TOTAL PROJECT	SHEET No.	TOTAL SHEETS
03	ED	89	24.9/27.2	8	116

John D. Welch 6-23-14
REGISTERED CIVIL ENGINEER DATE

6-23-14
PLANS APPROVAL DATE

REGISTERED PROFESSIONAL ENGINEER
JOHN WELCH
No. 58303
Exp. 6-30-14
CIVIL
STATE OF CALIFORNIA

THE "A1"TE OF CALIFORNIA OR ITS OFFICERS OR AGENTS SHALL NOT BE RESPONSIBLE FOR THE ACCURACY OR COMPLETENESS OF SCANNED COPIES OF THIS PLAN SHEET.

NOTE:

1. FOR * AND **, SEE NOTES ON SHEET X-1.
2. FOR B1-6 CURB AND GUTTER DEPRESSION, SEE SHEET L-4 AND D-4.

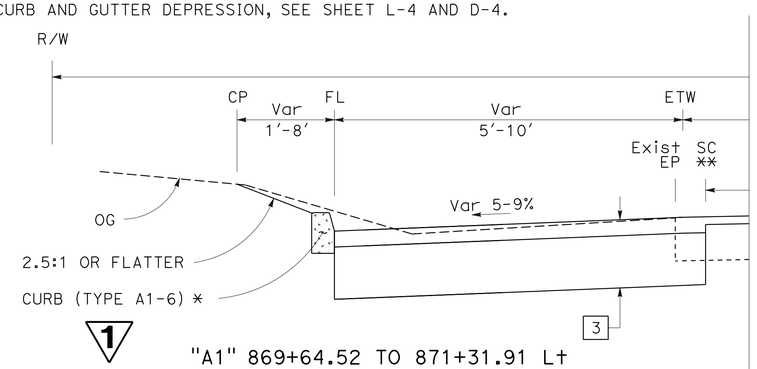

"A1" 869+64.52 TO 871+31.91 Lt

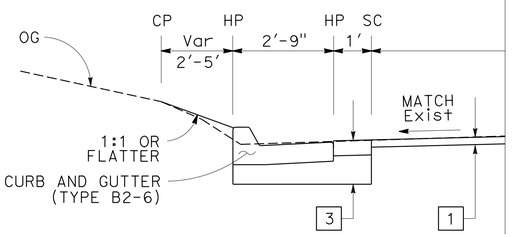

"A1" 794+02.74 TO 794+08.74 Lt
"A1" 794+12.70 TO 794+40.63 Lt

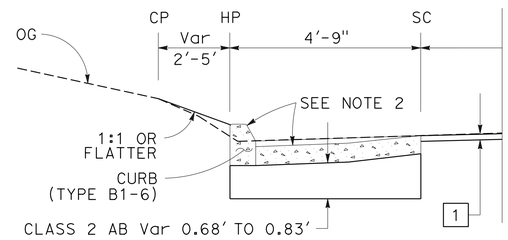

"A1" 794+08.74 TO 794+12.70 Lt

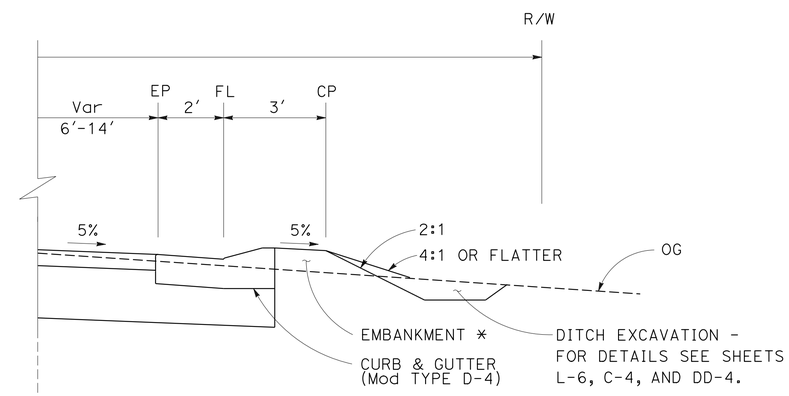

"A1" 818+57.31 TO 819+00.76 Rt
"A1" 819+12.61 TO 820+49.66 Rt
"A1" 820+53.62 TO 821+21.24 Rt

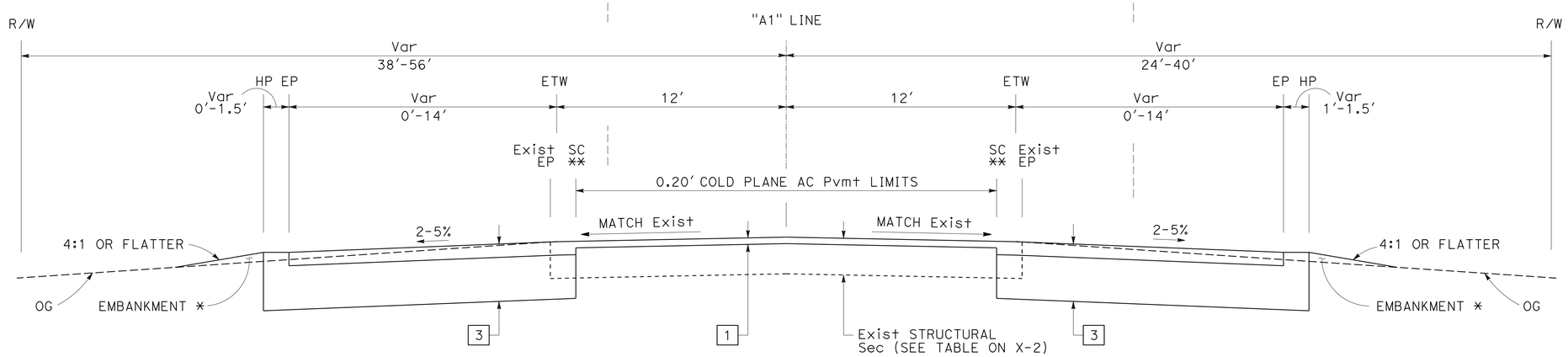

"A1" 790+31.30 TO 791+01.60 Lt
"A1" 805+61.27 TO 806+77.88 Lt
"A1" 817+58.14 TO 818+32.27 Lt
"A1" 836+56.35 TO 838+24.25 Lt
"A1" 844+41.85 TO 846+04.83 Lt ****
"A1" 846+43.47 TO 848+85.08 Lt ****
**** SEE CONSTRUCTION DETAILS FOR HMA DITCH.

"A1" 778+72.22 TO 780+28.00 Rt
"A1" 821+21.24 TO 821+50.00 Rt
"A1" 835+31.10 TO 836+87.91 Rt
"A1" 844+80.93 TO 847+50.66 Rt ***
"A1" 848+56.82 TO 849+53.66 Rt
"A1" 857+17.65 TO 858+10.97 Rt ***
*** PLACE EMBANKMENT TO RIGHT OF WAY.

1

ROUTE 89

TYPICAL CROSS SECTIONS

NO SCALE

1 REPLACED PER ADDENDUM No. 1 DATED DECEMBER 4, 2014

X-7

"A1"TE OF CALIFORNIA - DEPARTMENT OF TRANSPORTATION
03-DESIGN
Caltrans
FUNCTIONAL SUPERVISOR: MASTRI ALVANDI
CALCULATED-DESIGNED BY: JOHN WELCH
CHECKED BY: MASTRI ALVANDI
REVISED BY
DATE REVISED

LAST REVISION 06-17-14
DATE PLOTTED => 02-DEC-2014
TIME PLOTTED => 15:05

Dist	COUNTY	ROUTE	POST MILES TOTAL PROJECT	SHEET No.	TOTAL SHEETS
03	ED	89	24.9/27.2	20	116

1

John D. Welch 6-23-14
REGISTERED CIVIL ENGINEER DATE

6-23-14
PLANS APPROVAL DATE

REGISTERED PROFESSIONAL ENGINEER
JOHN WELCH
No. 58303
Exp. 6/30/14
CIVIL
STATE OF CALIFORNIA

THE STATE OF CALIFORNIA OR ITS OFFICERS OR AGENTS SHALL NOT BE RESPONSIBLE FOR THE ACCURACY OR COMPLETENESS OF SCANNED COPIES OF THIS PLAN SHEET.

NOTE:

1. FOR ACCURATE RIGHT OF WAY DATA, CONTACT RIGHT OF WAY ENGINEERING AT THE DISTRICT OFFICE.

CURVE DATA

No. ⊕	R	Δ	T	L
18	7000′	04°23′19″	268.21′	536.16′

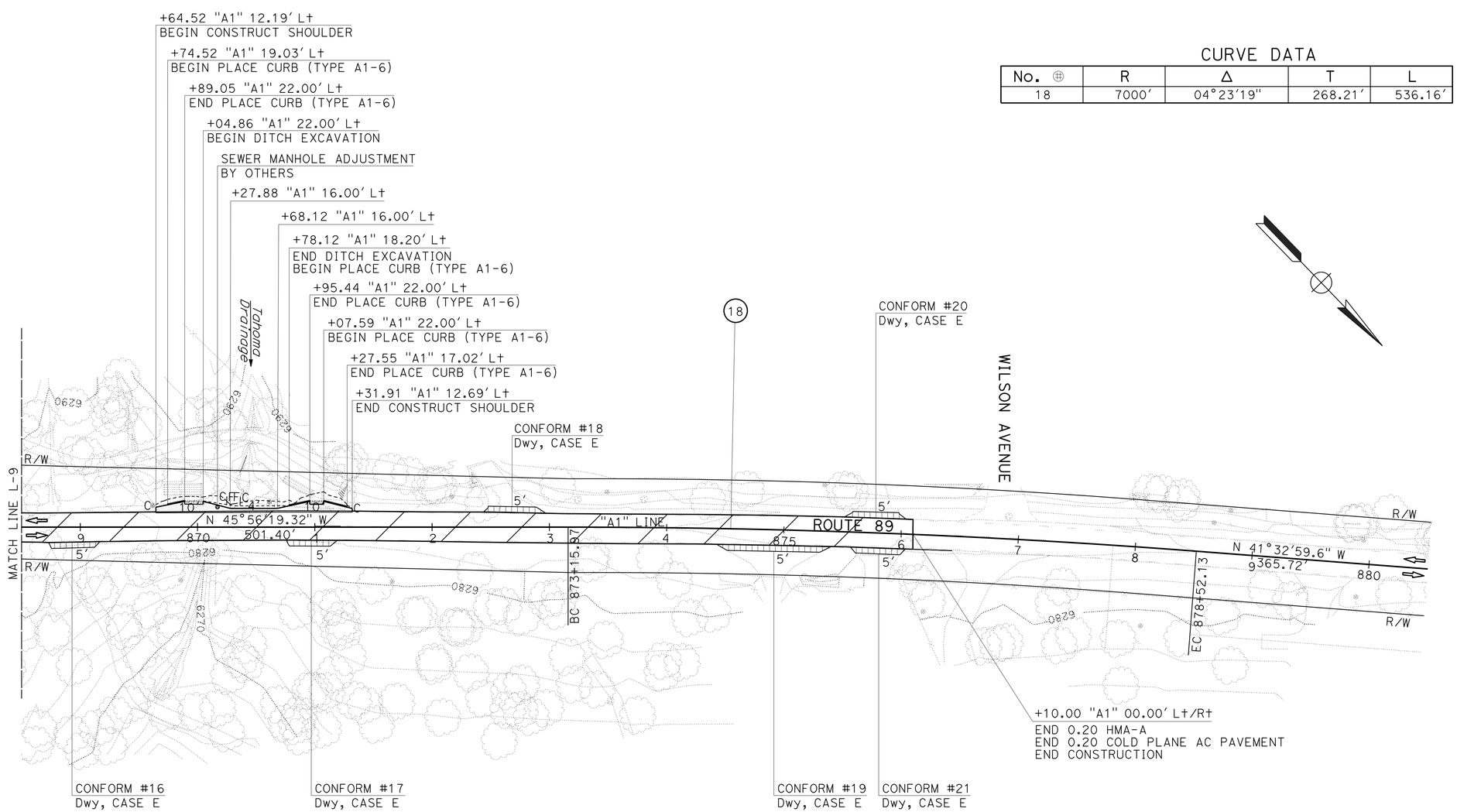

1 REPLACED PER ADDENDUM No. 1 DATED DECEMBER 4, 2014

LAYOUT
SCALE: 1" = 50′
L-10

STATE OF CALIFORNIA - DEPARTMENT OF TRANSPORTATION
Caltrans
03-DESIGN
FUNCTIONAL SUPERVISOR: MASTRI ALVANDI
CALCULATED-DESIGNED BY: JOHN WELCH
CHECKED BY: CARLOS BURKES
REVISED BY
DATE REVISED

LAST REVISION 06-17-14
DATE PLOTTED => 02-DEC-2014
TIME PLOTTED => 15:05

Dist	COUNTY	ROUTE	POST MILES TOTAL PROJECT	SHEET No.	TOTAL SHEETS
03	ED	89	24.9/27.2	22	116

John D. Welch 6-23-14
REGISTERED CIVIL ENGINEER DATE

6-23-14
PLANS APPROVAL DATE

REGISTERED PROFESSIONAL ENGINEER
JOHN WELCH
No. 58303
Exp. 6/30/14
CIVIL
STATE OF CALIFORNIA

THE STATE OF CALIFORNIA OR ITS OFFICERS OR AGENTS SHALL NOT BE RESPONSIBLE FOR THE ACCURACY OR COMPLETENESS OF SCANNED COPIES OF THIS PLAN SHEET.

NOTES:

1. FOR LOCATIONS OF REPLACE AC SURFACING, SEE SUMMARY OF QUANTITIES.
2. EXACT LOCATIONS OF REPLACE AC SURFACING TO BE DETERMINED IN THE FIELD BY THE ENGINEER.

LEGEND:

COLD PLANE AC Pvmt

REPLACE AC SURFACING (SEE NOTE 2 AND 3)

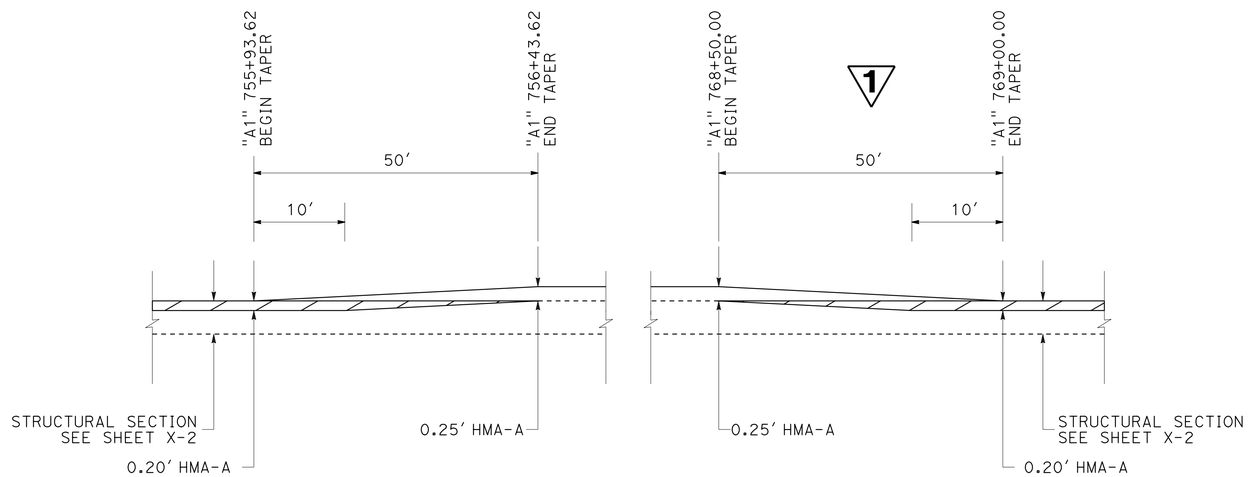

MAINLINE CONFORM TAPER

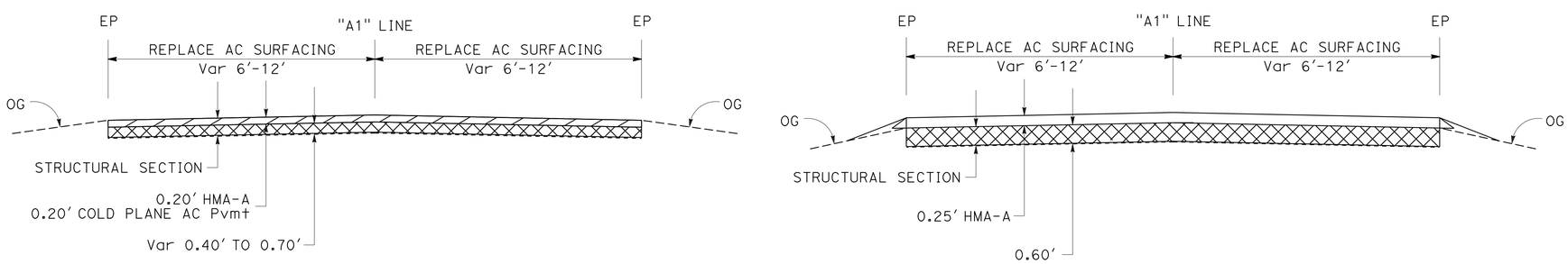

"A1" 754+15.2 TO 756+43.6
"A1" 769+00.0 TO 793+85.0

"A1" 756+43.6 TO 769+00.0

REPLACE AC SURFACING

1 **REPLACED PER ADDENDUM No. 1 DATED DECEMBER 4, 2014**

CONSTRUCTION DETAILS

NO SCALE

C-2

STATE OF CALIFORNIA - DEPARTMENT OF TRANSPORTATION
Caltrans
03-DESIGN

FUNCTIONAL SUPERVISOR: MASTRI ALVANDI
CALCULATED-DESIGNED BY: JOHN WELCH
CHECKED BY: MELANIE COLLINS
REVISED BY
DATE REVISED

LAST REVISION 06-17-14
DATE PLOTTED => 02-DEC-2014
TIME PLOTTED => 15:06

Dist	COUNTY	ROUTE	POST MILES TOTAL PROJECT	SHEET No.	TOTAL SHEETS
03	ED	89	24.9/27.2	23	116

John D. Welch 6-23-14
REGISTERED CIVIL ENGINEER DATE

6-23-14
PLANS APPROVAL DATE

REGISTERED PROFESSIONAL ENGINEER
JOHN WELCH
No. 58303
Exp. 6/30/14
CIVIL
STATE OF CALIFORNIA

THE STATE OF CALIFORNIA OR ITS OFFICERS OR AGENTS SHALL NOT BE RESPONSIBLE FOR THE ACCURACY OR COMPLETENESS OF SCANNED COPIES OF THIS PLAN SHEET.

NOTE:

1. FOR ACCURATE RIGHT OF WAY DATA, CONTACT RIGHT OF WAY ENGINEERING AT THE DISTRICT OFFICE.

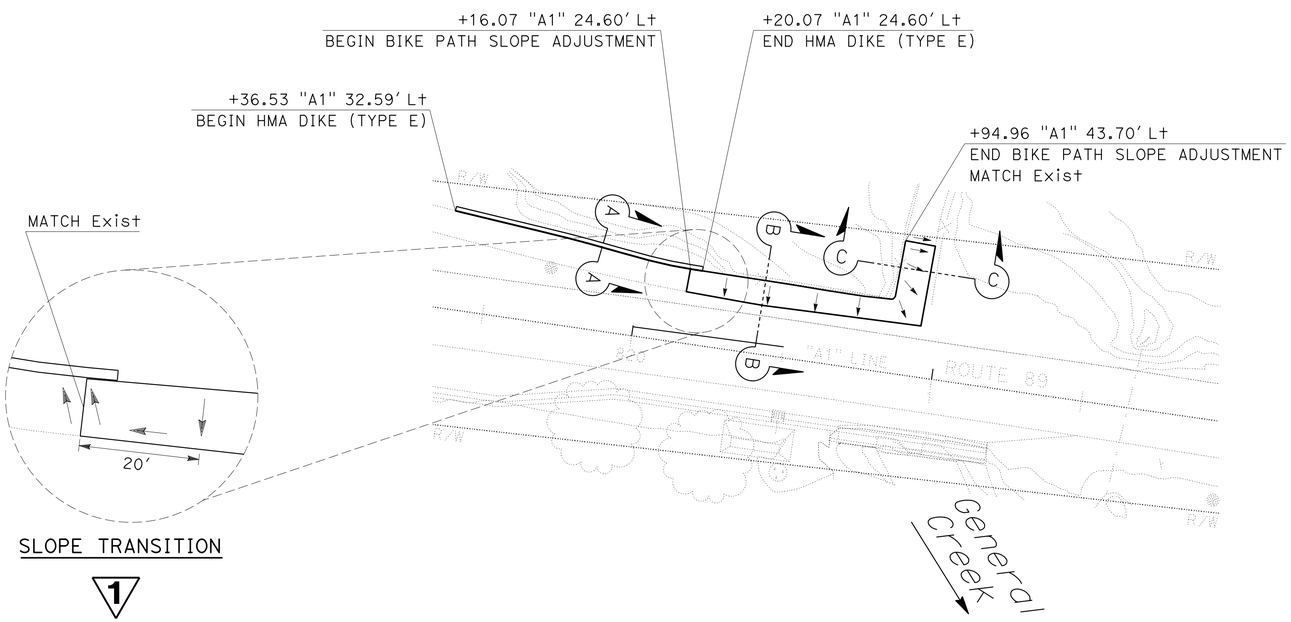

SLOPE TRANSITION

1

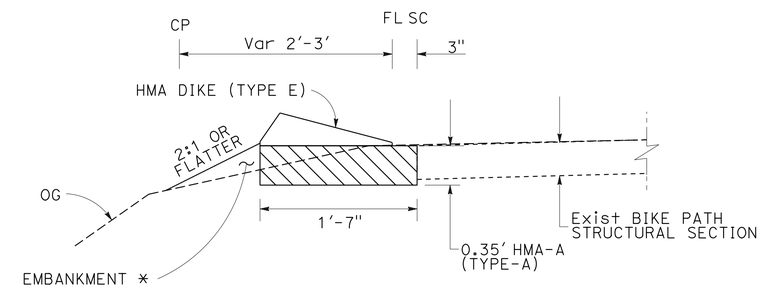

MINOR HMA-A

* SEE NOTE 3, SHEET X-1.

SECTION A-A

PLACE HMA DIKE (TYPE E)
BIKE PATH SLOPE ADJUSTMENT
ROUTE 89

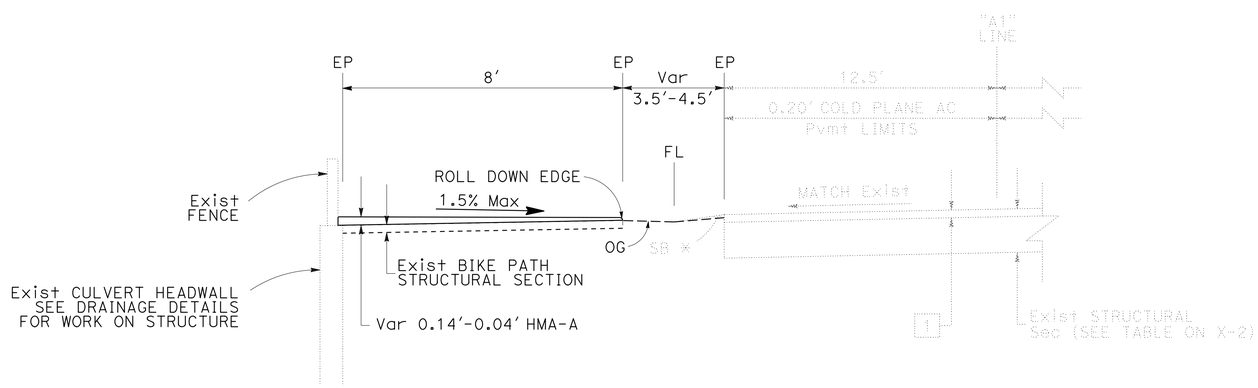

SECTION B-B

1

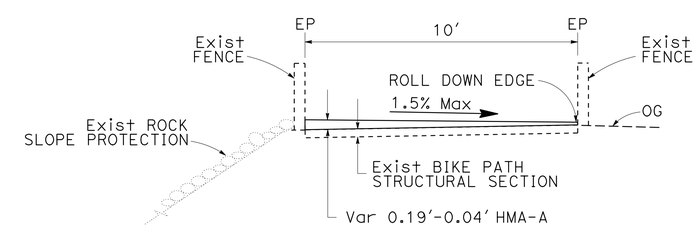

SECTION C-C

1

1 **REPLACED PER ADDENDUM No. 1 DATED DECEMBER 4, 2014**

CONSTRUCTION DETAILS

NO SCALE

C-3

STATE OF CALIFORNIA - DEPARTMENT OF TRANSPORTATION
Caltrans
03-DESIGN

FUNCTIONAL SUPERVISOR: MASTRI ALVANDI
CALCULATED-DESIGNED BY: JOHN WELCH
CHECKED BY: MELANIE COLLINS
REVISED BY / DATE REVISED

LAST REVISION 06-17-14
DATE PLOTTED => 03-DEC-2014
TIME PLOTTED => 13:22

Dist	COUNTY	ROUTE	POST MILES TOTAL PROJECT	SHEET No.	TOTAL SHEETS
03	ED	89	24.9/27.2	24	116

John D. Welch 6-23-14
REGISTERED CIVIL ENGINEER DATE

6-23-14
PLANS APPROVAL DATE

REGISTERED PROFESSIONAL ENGINEER
JOHN WELCH
No. 58303
Exp. 6/30/14
CIVIL
STATE OF CALIFORNIA

THE STATE OF CALIFORNIA OR ITS OFFICERS OR AGENTS SHALL NOT BE RESPONSIBLE FOR THE ACCURACY OR COMPLETENESS OF SCANNED COPIES OF THIS PLAN SHEET.

NOTES:

1. FOR ACCURATE RIGHT OF WAY DATA, CONTACT RIGHT OF WAY ENGINEERING AT THE DISTRICT OFFICE.
2. FOR DITCH EXCAVATION LOCATIONS NOT SHOWN ON THIS SHEET, SEE TYPICAL CROSS SECTIONS.

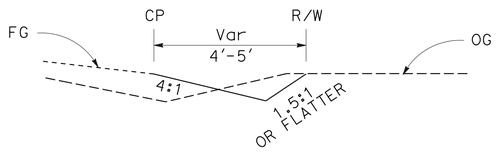

SECTION

"A1" 844+88.93 TO 846+15.88 Rt

DITCH EXCAVATION

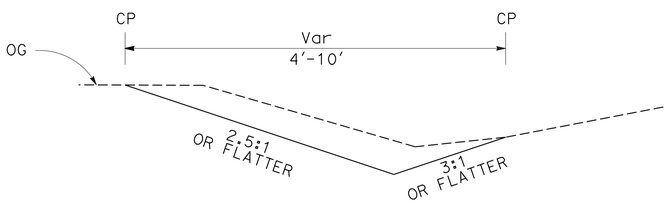

TYPICAL SECTION

"A1" 827+06.60 TO 828+30.90 Lt
"A1" 831+28.38 TO 832+06.30 Lt
"A1" 870+04.86 TO 870+78.12 Lt

DITCH EXCAVATION

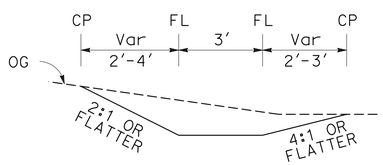

SECTION

"A1" 792+94.82 TO 793+38.95 Lt

DITCH EXCAVATION

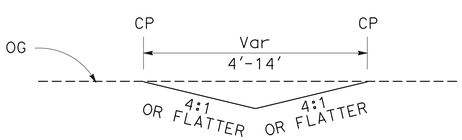

TYPICAL SECTION

"A1" 789+86.50 TO 791+25.00 Lt
"A1" 805+43.91 TO 806+65.76 Lt
"A1" 817+00.00 TO 817+60.00 Rt
"A1" 817+93.13 TO 818+57.31 Rt
"A1" 846+87.30 TO 847+31.71 Rt

DITCH EXCAVATION

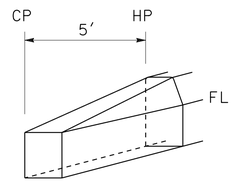

"A1" 869+74.52 Lt
"A1" 870+78.12 Lt
"A1" 871+27.55 Lt

1 TYPE A1-6 CURB TAPER

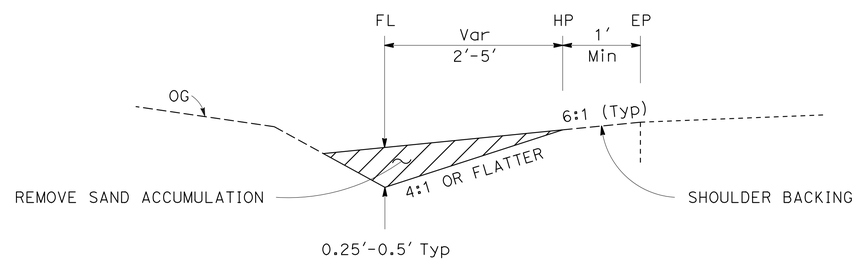

REMOVE SAND ACCUMULATION

ROADSIDE DITCHES SECTION (Typ)

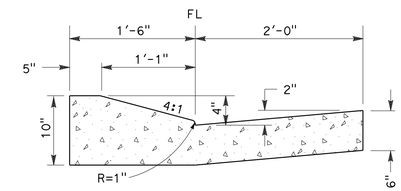

MODIFIED TYPE D-4 CURB AND GUTTER

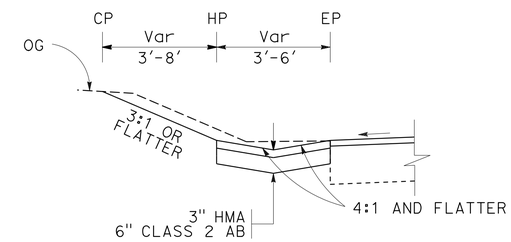

"A1" 845+38.39 TO 845+91.50 Lt
"A1" 846+46.95 TO 847+81.00 Lt

HMA DITCH

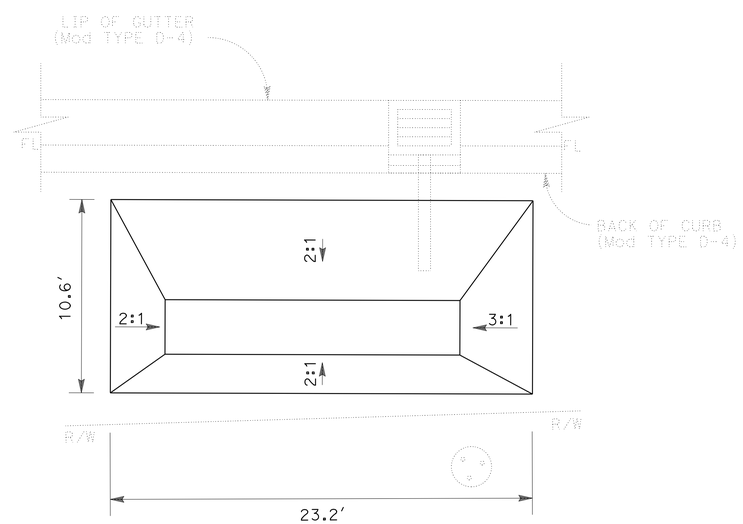

"A1" 820+34.40 TO 820+57.62

DITCH EXCAVATION

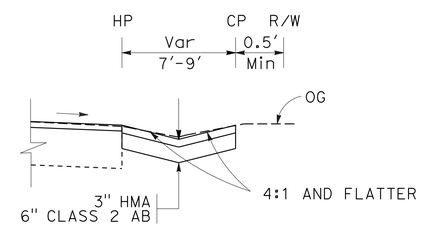

"A1" 810+42.60 TO 810+73.92 Rt

HMA DITCH

1 REPLACED PER ADDENDUM No. 1 DATED DECEMBER 4, 2014

CONSTRUCTION DETAILS

NO SCALE

C-4

STATE OF CALIFORNIA - DEPARTMENT OF TRANSPORTATION
Caltrans
03-DESIGN

FUNCTIONAL SUPERVISOR: MASTRI ALVANDI
CALCULATED-DESIGNED BY: JOHN WELCH
CHECKED BY: MELANIE COLLINS
REVISED BY
DATE REVISED

LAST REVISION 06-17-14
DATE PLOTTED => 02-DEC-2014
TIME PLOTTED => 15:06

Dist	COUNTY	ROUTE	POST MILES TOTAL PROJECT	SHEET No.	TOTAL SHEETS
03	ED	89	24.9/27.2	25	116

John D. Welch 6-23-14
REGISTERED CIVIL ENGINEER DATE

6-23-14
PLANS APPROVAL DATE

REGISTERED PROFESSIONAL ENGINEER
JOHN WELCH
No. 58303
Exp. 6/30/14
CIVIL
STATE OF CALIFORNIA

THE STATE OF CALIFORNIA OR ITS OFFICERS OR AGENTS SHALL NOT BE RESPONSIBLE FOR THE ACCURACY OR COMPLETENESS OF SCANNED COPIES OF THIS PLAN SHEET.

NOTES: 1

1. FOR ACCURATE RIGHT OF WAY DATA, CONTACT RIGHT OF WAY ENGINEERING AT THE DISTRICT OFFICE.
2. FOR OSD DETAILS, SEE Std PLAN D87D.
3. FOR TYPICAL CROSS SECTION, SEE SHEET X-9.

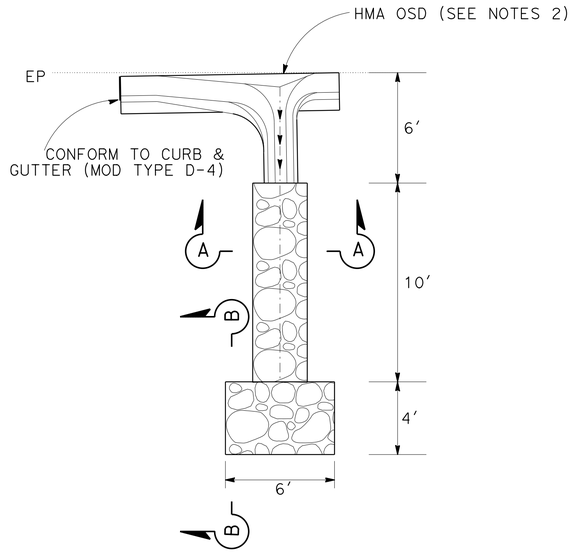

PLAN
ROCK LINED DITCH
"A1" 754+74.00 Lt
"A1" 754+79.00 Rt

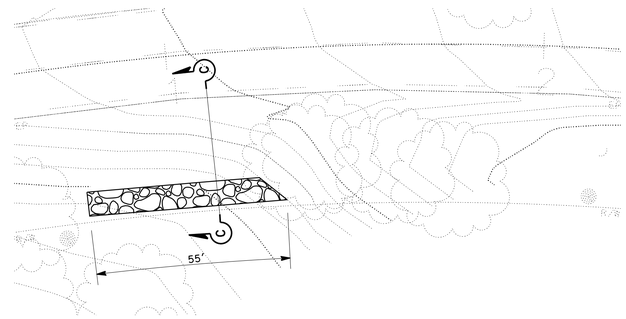

PLAN
ROCK SLOPE PROTECTION
"A1" 770+75 TO 771+30 Rt

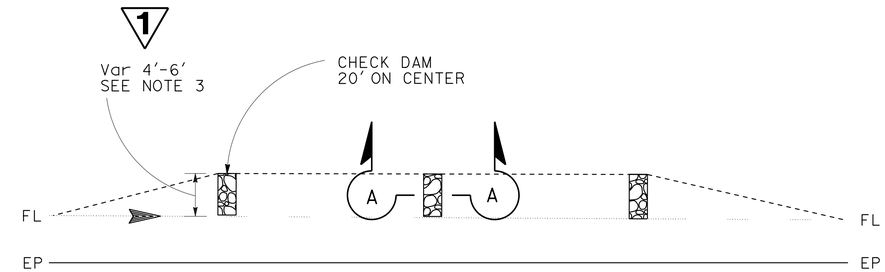

"A1" LINE ROUTE 89

"A1" 854+65.67 TO 855+37.99 Lt
"A1" 860+92.98 TO 861+75.63 Lt
"A1" 866+88.93 TO 867+77.30 Lt

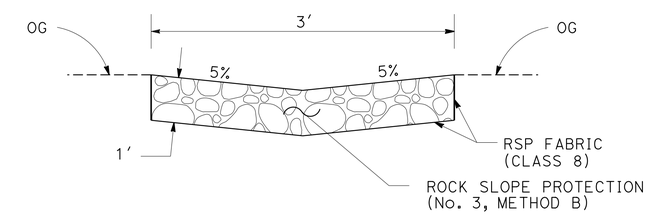

SECTION A-A

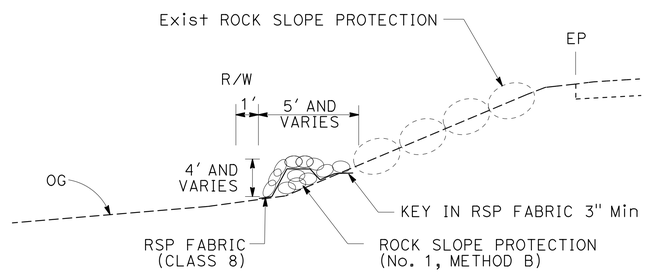

SECTION C-C

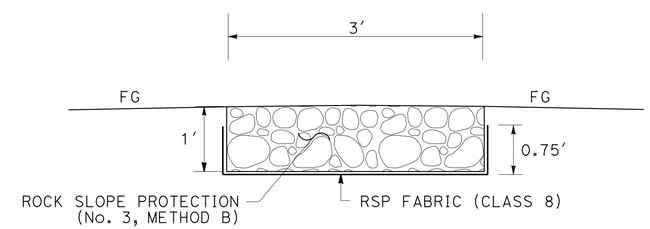

SECTION A-A
CHECK DAM

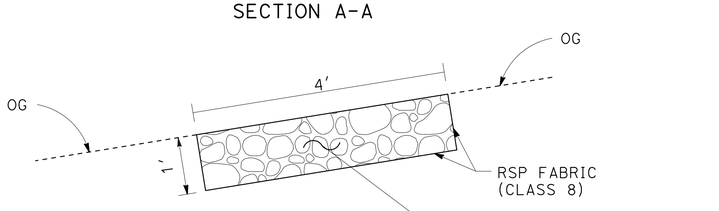

SECTION B-B

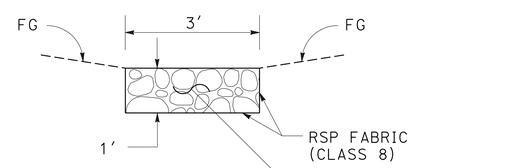

ROCK LINED DITCH
"A1" 790+59 to 790+89 Lt

1 **REPLACED PER ADDENDUM No. 1 DATED DECEMBER 4, 2014**

CONSTRUCTION DETAILS
NO SCALE

C-5

STATE OF CALIFORNIA - DEPARTMENT OF TRANSPORTATION
Caltrans
03-DESIGN
FUNCTIONAL SUPERVISOR: MASTRI ALVANDI
CALCULATED-DESIGNED BY: JOHN WELCH
CHECKED BY: MELANIE COLLINS
REVISED BY
DATE REVISED

LAST REVISION 06-17-14
DATE PLOTTED => 02-DEC-2014
TIME PLOTTED => 15:06

Dist	COUNTY	ROUTE	POST MILES TOTAL PROJECT	SHEET No.	TOTAL SHEETS
03	ED	89	24.9/27.2	36	116

John D. Welch 6-23-14
REGISTERED CIVIL ENGINEER DATE

6-23-14
PLANS APPROVAL DATE

REGISTERED PROFESSIONAL ENGINEER
JOHN WELCH
No. 58303
Exp. 6/30/14
CIVIL
STATE OF CALIFORNIA

THE STATE OF CALIFORNIA OR ITS OFFICERS OR AGENTS SHALL NOT BE RESPONSIBLE FOR THE ACCURACY OR COMPLETENESS OF SCANNED COPIES OF THIS PLAN SHEET.

NOTES:

1. FOR ACCURATE RIGHT OF WAY DATA, CONTACT RIGHT OF WAY ENGINEERING AT THE DISTRICT OFFICE.
2. FOR DI AND IG STATIONS, OFFSETS, AND ELEVATIONS SEE DRAINAGE DETAIL SHEETS.

9 DELETED 1

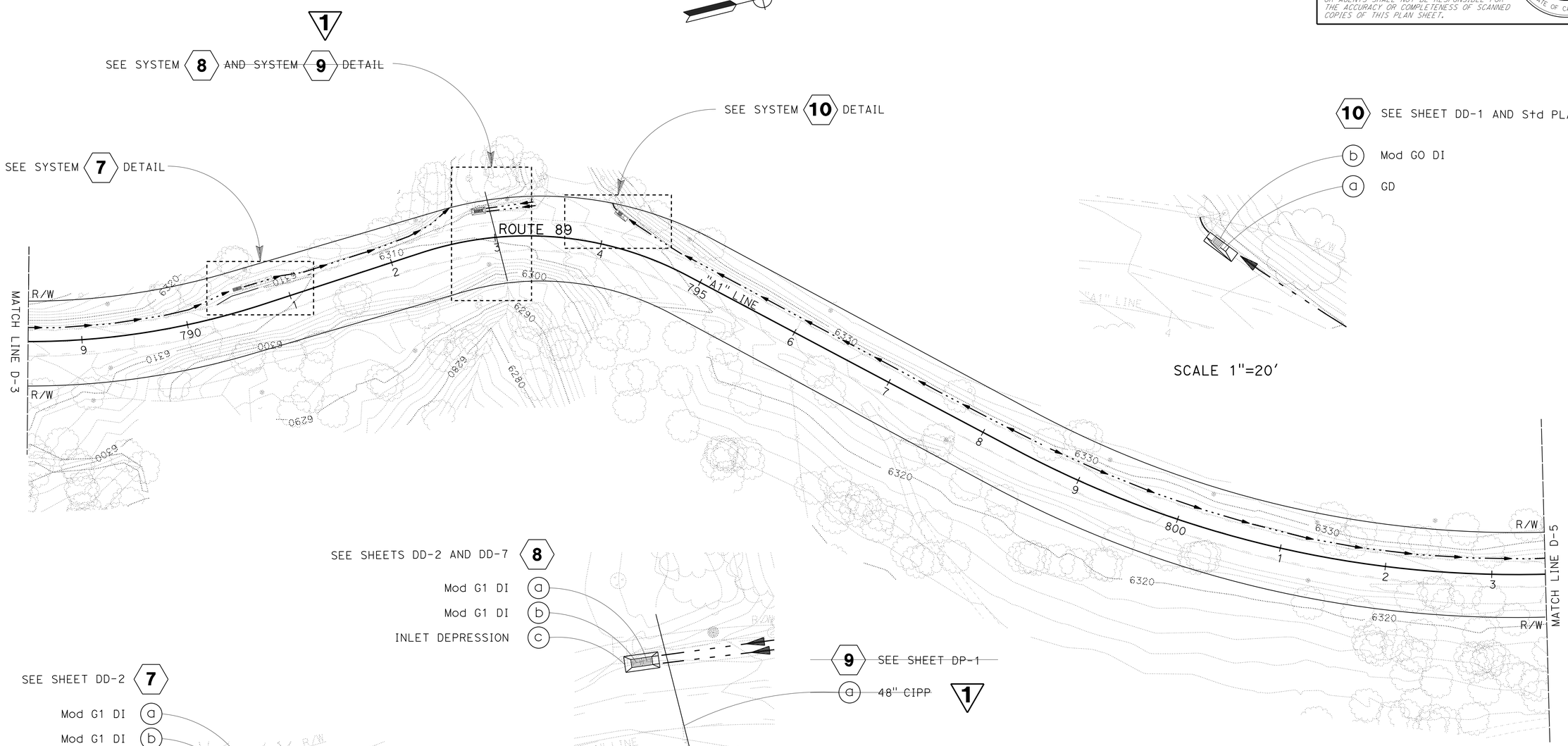

SCALE 1"=20'

SCALE 1"=20'

1 **REPLACED PER ADDENDUM No. 1 DATED DECEMBER 4, 2014**

APPROVED FOR DRAINAGE WORK ONLY

DRAINAGE PLAN

SCALE: 1" = 50'

D-4

STATE OF CALIFORNIA - DEPARTMENT OF TRANSPORTATION
03-DESIGN
Caltrans

FUNCTIONAL SUPERVISOR: MASTRI ALVANDI
CALCULATED-DESIGNED BY: JOHN WELCH
CHECKED BY: JOHN HUDSON
REVISED BY
DATE REVISED

LAST REVISION 06-17-14
DATE PLOTTED => 02-DEC-2014
TIME PLOTTED => 15:06

Dist	COUNTY	ROUTE	POST MILES TOTAL PROJECT	SHEET No.	TOTAL SHEETS
03	ED	89	24.9/27.2	38	116

John D. Welch 6-23-14
REGISTERED CIVIL ENGINEER DATE

6-23-14
PLANS APPROVAL DATE

REGISTERED PROFESSIONAL ENGINEER
JOHN WELCH
No. 58303
Exp. 6/30/14
CIVIL
STATE OF CALIFORNIA

THE STATE OF CALIFORNIA OR ITS OFFICERS OR AGENTS SHALL NOT BE RESPONSIBLE FOR THE ACCURACY OR COMPLETENESS OF SCANNED COPIES OF THIS PLAN SHEET.

NOTES:

1. FOR ACCURATE RIGHT OF WAY DATA, CONTACT RIGHT OF WAY ENGINEERING AT THE DISTRICT OFFICE.
2. FOR DI AND IG STATIONS, OFFSETS, AND ELEVATIONS SEE DRAINAGE DETAIL SHEETS.
3. SEE SHEET DD-9 FOR LIMITS OF REMOVE HEADWALL ON DS No. 16.

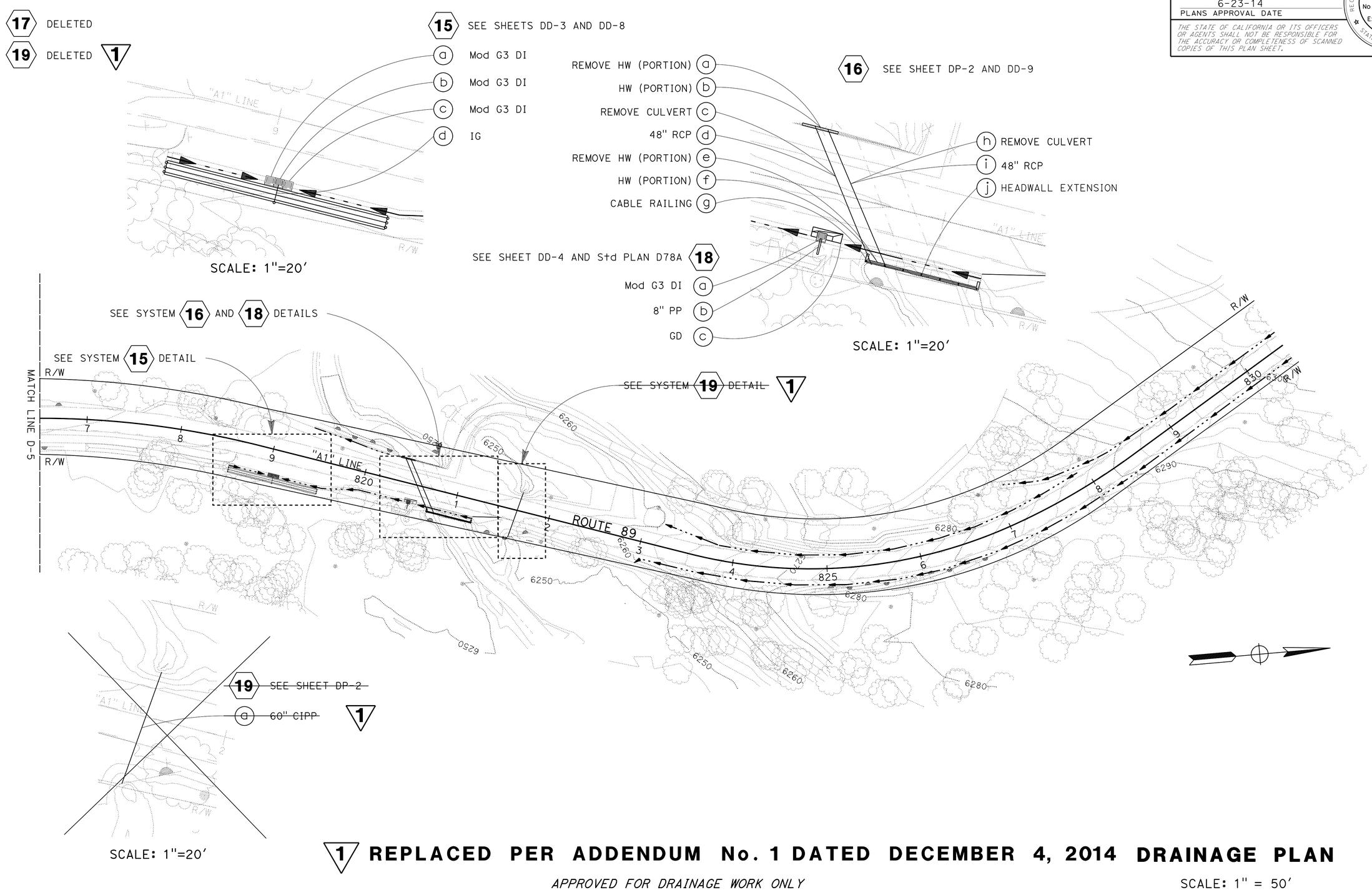

1 REPLACED PER ADDENDUM No. 1 DATED DECEMBER 4, 2014

DRAINAGE PLAN

APPROVED FOR DRAINAGE WORK ONLY

SCALE: 1" = 50'

D-6

STATE OF CALIFORNIA - DEPARTMENT OF TRANSPORTATION
Caltrans
03-DESIGN

FUNCTIONAL SUPERVISOR: MASTRI ALVANDI
CALCULATED-DESIGNED BY: JOHN WELCH
CHECKED BY: JOHN HUDSON
REVISED BY
DATE REVISED

LAST REVISION 06-17-14
DATE PLOTTED => 02-DEC-2014
TIME PLOTTED => 15:06

Dist	COUNTY	ROUTE	POST MILES TOTAL PROJECT	SHEET No.	TOTAL SHEETS
03	ED	89	24.9/27.2	41	116

REGISTERED CIVIL ENGINEER 6-23-14 DATE

6-23-14
PLANS APPROVAL DATE

REGISTERED PROFESSIONAL ENGINEER ANDRA SPECK No. C69243 Exp. 6-30-16 CIVIL STATE OF CALIFORNIA

THE STATE OF CALIFORNIA OR ITS OFFICERS OR AGENTS SHALL NOT BE RESPONSIBLE FOR THE ACCURACY OR COMPLETENESS OF SCANNED COPIES OF THIS PLAN SHEET.

NOTE:

1. FOR ACCURATE RIGHT OF WAY DATA, CONTACT RIGHT OF WAY ENGINEERING AT THE DISTRICT OFFICE.

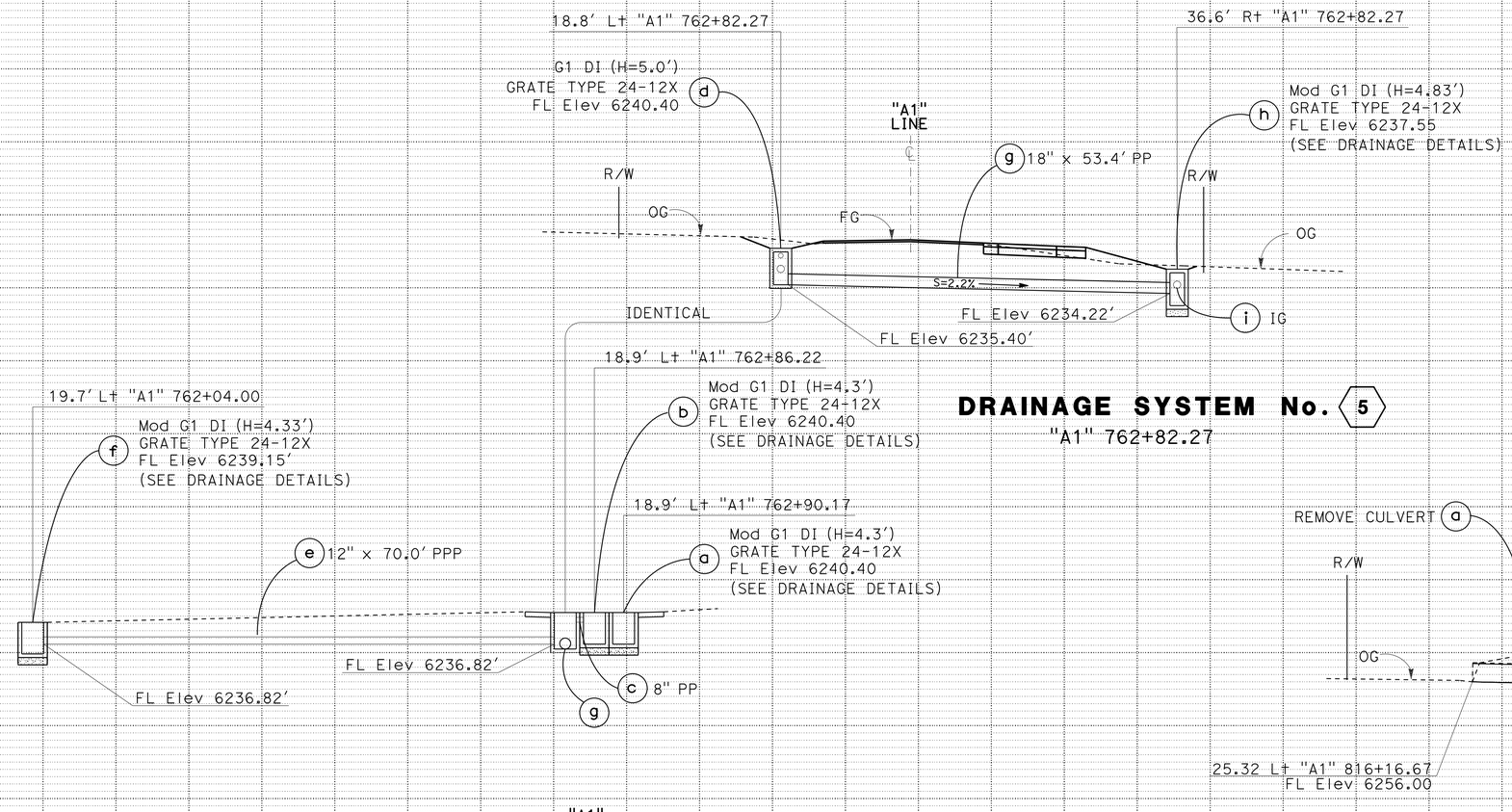

DRAINAGE SYSTEM No. 5
"A1" 762+82.27

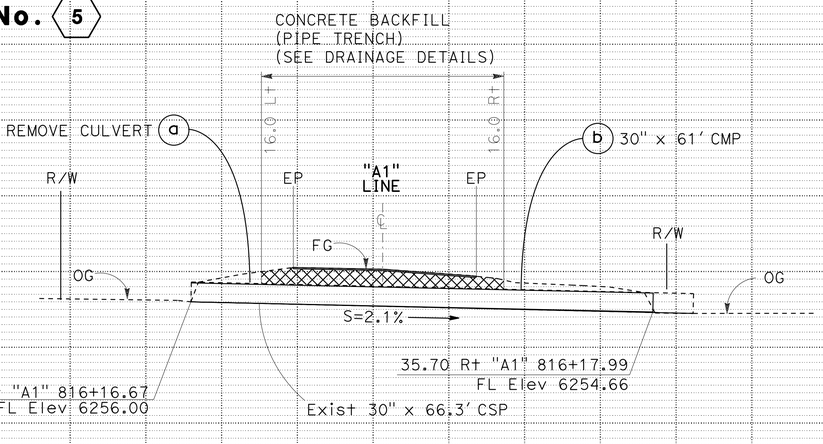

DRAINAGE SYSTEM No. 14
"A1" 816+17.20

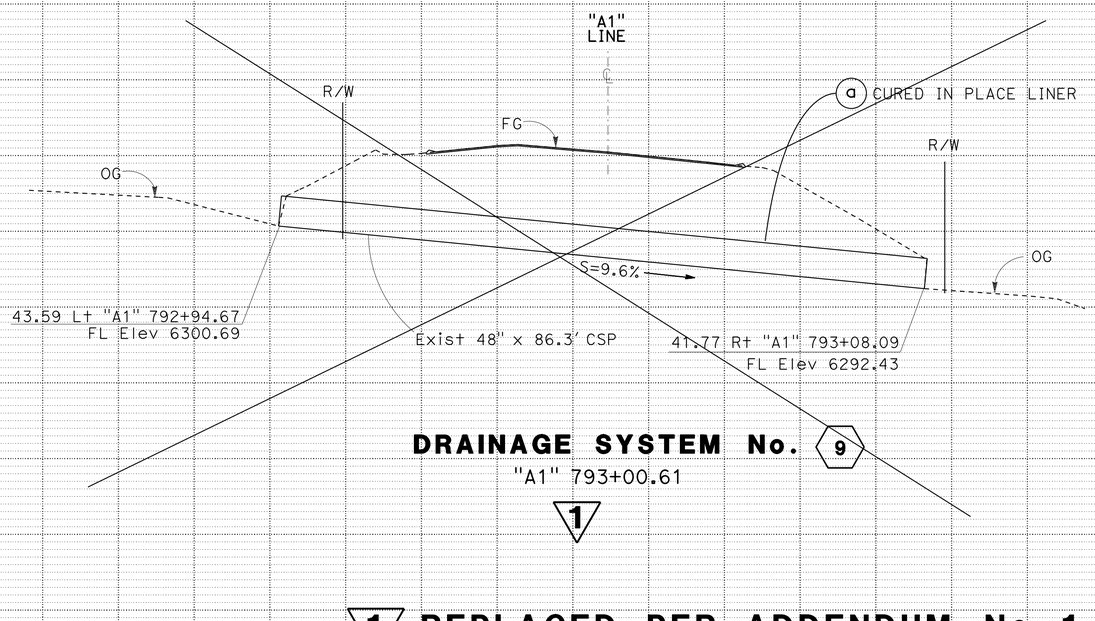

DRAINAGE SYSTEM No. 9
"A1" 793+00.61

1

1 REPLACED PER ADDENDUM No. 1 DATED DECEMBER 4, 2014

DRAINAGE PROFILE
SCALE: HORIZ 1" = 10'
VERT 1" = 10'

DP-1

STATE OF CALIFORNIA - DEPARTMENT OF TRANSPORTATION
Caltrans
HYDRAULICS
FUNCTIONAL SUPERVISOR: DENNIS JAGODA
CALCULATED-DESIGNED BY: JOHN HUDSON
CHECKED BY: ANDRA SPECK
REVISED BY
DATE REVISED

LAST REVISION 00-00-00
DATE PLOTTED => 02-DEC-2014
TIME PLOTTED => 15:06

Dist	COUNTY	ROUTE	POST MILES TOTAL PROJECT	SHEET No.	TOTAL SHEETS
03	ED	89	24.9/27.2	42	116

REGISTERED CIVIL ENGINEER 6-23-14 DATE

6-23-14
PLANS APPROVAL DATE

REGISTERED PROFESSIONAL ENGINEER ANDRA SPECK No. C69243 Exp. 6-30-16 CIVIL STATE OF CALIFORNIA

THE STATE OF CALIFORNIA OR ITS OFFICERS OR AGENTS SHALL NOT BE RESPONSIBLE FOR THE ACCURACY OR COMPLETENESS OF SCANNED COPIES OF THIS PLAN SHEET.

NOTE:

1. FOR ACCURATE RIGHT OF WAY DATA, CONTACT RIGHT OF WAY ENGINEERING AT THE DISTRICT OFFICE.

17 DELETED

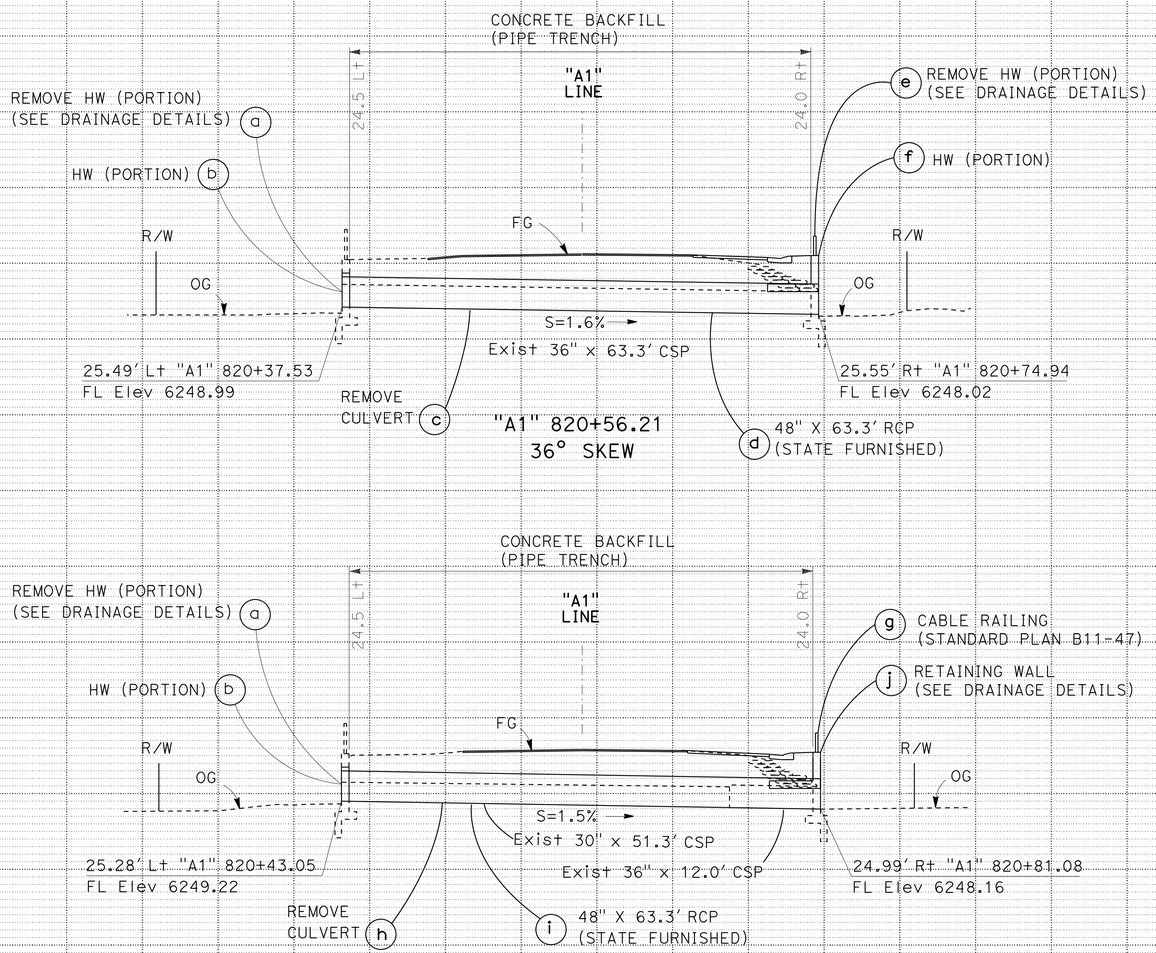

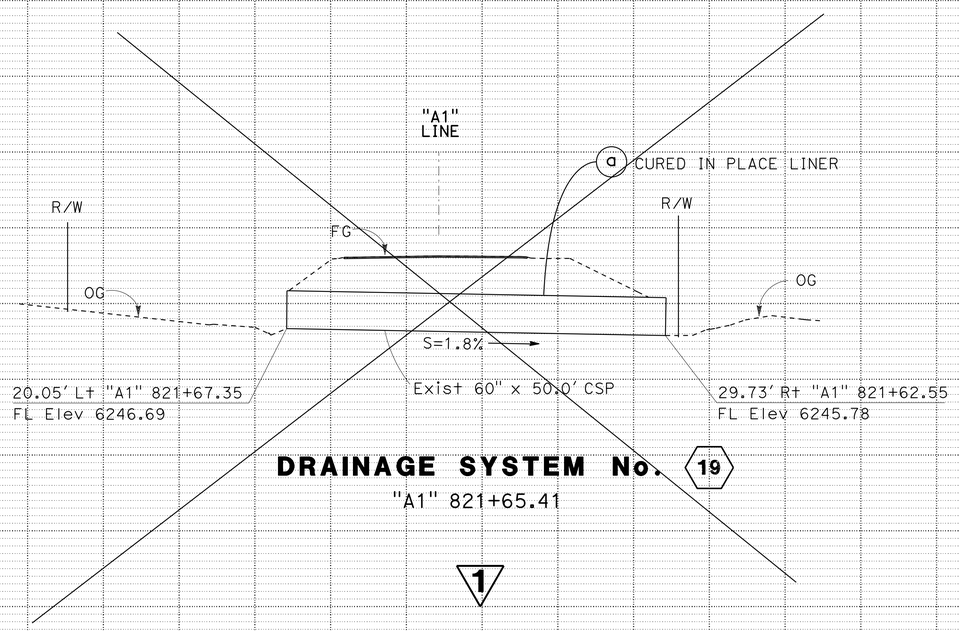

DRAINAGE SYSTEM No. 19

"A1" 821+65.41

1

DRAINAGE SYSTEM No. 16

"A1" 820+62.26
36° SKEW

1 **REPLACED PER ADDENDUM No. 1 DATED DECEMBER 4, 2014**

DRAINAGE PROFILE

SCALE: HORIZ 1" = 10'
VERT 1" = 10'

DP-2

STATE OF CALIFORNIA - DEPARTMENT OF TRANSPORTATION
Caltrans
HYDRAULICS

FUNCTIONAL SUPERVISOR: DENNIS JAGODA
CALCULATED-DESIGNED BY: JOHN HUDSON
CHECKED BY: ANDRA SPECK
REVISED BY
DATE REVISED

LAST REVISION 00-00-00
DATE PLOTTED => 02-DEC-2014
TIME PLOTTED => 15:06

Dist	COUNTY	ROUTE	POST MILES TOTAL PROJECT	No.	SHEETS
03	ED	89	24.9/27.2	52	116

REGISTERED CIVIL ENGINEER John D. Welch DATE 6-23-14

PLANS APPROVAL DATE 6-23-14

REGISTERED PROFESSIONAL ENGINEER JOHN WELCH No. 58303 Exp. 6/30/14 CIVIL STATE OF CALIFORNIA

THE STATE OF CALIFORNIA OR ITS OFFICERS OR AGENTS SHALL NOT BE RESPONSIBLE FOR THE ACCURACY OR COMPLETENESS OF SCANNED COPIES OF THIS PLAN SHEET.

NOTES:

1. DS No. 4 DELETED.
2. IG STATION IS AT THE CENTER OF THE IG.

DRAINAGE QUANTITIES

ADJUST INLET	INLET DEPRESSION	REMOVE CULVERT	CLEAN OUT RISER AND COVER (12" PLASTIC PIPE)	8" PLASTIC PIPE	12" PLASTIC PIPE	18" PLASTIC PIPE	30" CORRUGATED STEEL PIPE (.109"THICK)	REMOVE HEADWALL	48" REINFORCED CONCRETE PIPE (*)	PLACE 48" REINFORCED CONCRETE PIPE	~~48" CURED IN PLACE PIPELINER~~	~~60" CURED IN PLACE PIPELINER~~	~~CLEANING, INSPECTING, AND PREPARING CULVERT~~	HEIGHT OF INLET "H" (N)	MINOR CONCRETE (MINOR STRUCTURE)	MINOR CONCRETE (GUTTER DEPRESSION)	MISCELLANEOUS IRON AND STEEL	BAR REINFORCING STEEL (EPOXY COATED)	CABLE RAILING	FRAME AND GRATE (TYPE 24-12X) (N)	CONCRETE BACKFILL (PIPE TRENCH)	CLASS 6 PERMEABLE MATERIAL (BLANKET)	CLASS 3 PERMEABLE MATERIAL (BLANKET)	SAND BEDDING	FILTER FABRIC (CLASS D) (N)	12" PERFORATED PLASTIC PIPE	DRAINAGE INLET MARKER	MARKER (CULVERT)	DESCRIPTION	STATION "A1" LINE	DRAINAGE SHEET No.	DRAINAGE SYSTEM No.	DRAINAGE UNIT
EA	EA	LF	EA	LF	LF	LF	LF	EA	LF	LF	LF	LF	LF	LF	CY	CY	LB	LB	LF	EA	CY	CY	CY	CY	SQYD	LF	EA	EA					
														4.33	1.3		239			1			0.22		4		1		Mod G1 DI	757+18.36	D-1	1	a
														4.33	1.3		239			1			0.22		4		1		Mod G1 DI	757+14.17			b
			4		6																	26		2.4	85	93			IG	756+95.20			c
														4.33	1.3		239			1			0.22		4		1		Mod G1 DI	758+75.40	D-1	2	a
														4.33	1.3		239			1			0.22		4		1		Mod G1 DI	758+71.24			b
			3		4																	18		1.6	69	62			IG	758+52.45			c
														4.33	1.3		239			1			0.22		4		1		Mod G1 DI	759+82.37	D-1	3	a
														4.33	1.3		239			1			0.22		4		1		Mod G1 DI	759+77.92			b
			4		6																	26		2.4	85	93			IG	759+58.29			c
														4.33	1.3		239			1			0.22		4		1		Mod G1 DI	762+90.17	D-2	5	a
														4.33	1.3		239			1			0.22		4		1		Mod G1 DI	762+86.22			b
				1																									CONNECTING PIPE	762+84.22			c
														5.00	1.4		239			1							1		G1 DI	762+82.27			d
					2																	20		1.8	113	70			IG	762+45.27			e
														4.33	1.3		239			1			0.22		4		1		Mod G1 DI	762+04.00			f
						53.4																						2	18" PP	762+82.27			g
														4.83	1.4		239			1			0.22		4		1		Mod G1 DI	762+82.27			h
			3		6																	29		3.0	121	121			IG	762+49.16			i
														4.33	1.3		239			1			0.22		4		1		Mod G1 DI	780+00.09	D-3	6	a
														4.33	1.3		239			1			0.22		4		1		Mod G1 DI	779+96.25			b
														4.33	1.3		239			1			0.22		4		1		Mod G1 DI	779+92.41			c
	1																												INLET DEPRESSION				d
														3.33	1.0		239			1			0.22		4		1		Mod G1 DI	790+56.19	D-4	7	a
														3.33	1.0		239			1			0.22		4		1		Mod G1 DI	790+52.12			b
														3.83	1.1		239			1			0.22		4		1		Mod G1 DI	792+89.82	D-4	8	a
														3.83	1.1		239			1			0.22		4		1		Mod G1 DI	792+86.16			b
	1																												INLET DEPRESSION				c
										~~86.3~~		~~87~~																~~2~~	~~CULVERT LINER~~	~~793+00.61~~	~~D-4~~	~~9~~	~~a~~
0	2	0	14	1	24	53.4	0	0	0	0	~~86.3~~	~~0~~	~~87~~	-	22.6	0	4,302	0	0	18	0	119	3.74	11.2	541	439	18	~~4~~ 2	SHEET TOTAL				

(*) STATE FURNISHED MATERIAL
(N) NOT A SEPARATE PAY ITEM, FOR INFORMATION ONLY

1 REPLACED PER ADDENDUM No. 1 DATED DECEMBER 4, 2014

DRAINAGE QUANTITIES

DQ-1

REVISED BY | DATE REVISED
JOHN WELCH | KIDIANGA TSHIUNZA
CALCULATED-DESIGNED BY | CHECKED BY
FUNCTIONAL SUPERVISOR | MASTRI ALVANDI

STATE OF CALIFORNIA - DEPARTMENT OF TRANSPORTATION
Caltrans
03-DESIGN

LAST REVISION OG-17-14 | DATE PLOTTED => 02-DEC-2014 | TIME PLOTTED => 15:06

Dist	COUNTY	ROUTE	POST MILES TOTAL PROJECT	No.	SHEETS
03	ED	89	24.9/27.2	53	116

1

John D. Welch 6-23-14
REGISTERED CIVIL ENGINEER DATE

6-23-14
PLANS APPROVAL DATE

REGISTERED PROFESSIONAL ENGINEER
JOHN WELCH
No. 58303
Exp. 6/30/14
CIVIL
STATE OF CALIFORNIA

THE STATE OF CALIFORNIA OR ITS OFFICERS OR AGENTS SHALL NOT BE RESPONSIBLE FOR THE ACCURACY OR COMPLETENESS OF SCANNED COPIES OF THIS PLAN SHEET.

NOTES:

1. DS No. 17 DELETED.
2. IG STATION IS AT THE CENTER OF THE IG.

DRAINAGE QUANTITIES

ADJUST INLET (EA)	INLET DEPRESSION (EA)	REMOVE CULVERT (LF)	CLEAN OUT RISER AND COVER (12" PLASTIC PIPE) (EA)	8" PLASTIC PIPE (LF)	12" PLASTIC PIPE (LF)	18" PLASTIC PIPE (LF)	30" CORRUGATED STEEL PIPE (.109"THICK) (LF)	REMOVE HEADWALL (EA)	(*) 48" REINFORCED CONCRETE PIPE (LF)	PLACE 48" REINFORCED CONCRETE PIPE (LF)	~~48" CURED IN PLACE PIPELINER (LF)~~	~~60" CURED IN PLACE PIPELINER (LF)~~	~~CLEANING, INSPECTING, AND PREPARING CULVERT (LF)~~	(N) HEIGHT OF INLET "H" (LF)	MINOR CONCRETE (MINOR STRUCTURE) (CY)	MINOR CONCRETE (GUTTER DEPRESSION) (CY)	MISCELLANEOUS IRON AND STEEL (LB)	BAR REINFORCING STEEL (EPOXY COATED) (LB)	CABLE RAILING (LF)	(N) FRAME AND GRATE (TYPE 24-12X) (EA)	CONCRETE BACKFILL (PIPE TRENCH) (CY)	CLASS 6 PERMEABLE MATERIAL (BLANKET) (CY)	CLASS 3 PERMEABLE MATERIAL (BLANKET) (CY)	SAND BEDDING (CY)	(N) FILTER FABRIC (CLASS D) (SQYD)	12" PERFORATED PLASTIC PIPE (LF)	DRAINAGE INLET MARKER (EA)	MARKER (CULVERT) (EA)	DESCRIPTION	STATION "A1" LINE	DRAINAGE SHEET No.	DRAINAGE SYSTEM No.	DRAINAGE UNIT
																1.4													GUTTER DEPRESSION		D-4	10	a
														4.08	1.5		239			1			0.27		5		1		Mod GO DI	794+10.70			b
														3.83	1.1		239			1			0.22		4		1		Mod G1 DI	805+99.22	D-5	11	a
														3.83	1.1		239			1			0.22		4		1		Mod G1 DI	806+03.11			b
														3.33	1.0		239			1			0.22		4		1		Mod G1 DI	810+65.80	D-5	12	a
														3.33	1.0		239			1			0.22		4		1		Mod G1 DI	810+69.40			b
														3.00	1.0		239			1			0.22		4		1		Mod G1 DI	814+90.49	D-5	13	a
														3.00	1.0		239			1			0.22		4		1		Mod G1 DI	814+94.44			b
														3.00	1.0		239			1			0.22		4		1		Mod G1 DI	814+98.39			c
		66.3																											REMOVE CULVERT		D-5	14	a
							61														21.6							2	30" CMP	816+17.20			b
														3.58	1.2		239			1			0.22		4		1		Mod G3 DI	819+02.74	D-6	15	a
														3.58	1.2		239			1			0.22		4		1		Mod G3 DI	819+06.69			b
														3.58	1.2		239			1			0.22		4		1		Mod G3 DI	819+10.64			c
			7		8																	40		7.1	200	282			IG	819+06.29			d
								1																					REMOVE HEADWALL		D-6	16	a
															2.2			472											HEADWALL				b
		63.3																											REMOVE CULVERT				c
									63.3	63.3											36.9							2	48" RCP	820+56.21			d
								1																					REMOVE HEADWALL				e
															2.2			472											HEADWALL				f
																			50										CABLE RAILING				g
		63.3																											REMOVE CULVERT				h
									63.3	63.3																			48" RCP	820+62.26			i
															12.9														RETAINING WALL				j
														3.50	1.1		239			1			0.22		4		1		Mod G3 DI	820+51.64	D-6	18	a
				6																									8" PP				b
																1.5													GUTTER DEPRESSION				c
0	0	192.9	7	6	8	0	61	2	126.6	126.6	~~0~~	~~0~~	~~0~~	-	30.7	2.9	2,868	944	50	12	58.5	40	2.69	7.1	249	282	12	4	SHEET TOTAL				

(*) STATE FURNISHED MATERIAL
(N) NOT A SEPARATE PAY ITEM, FOR INFORMATION ONLY

1 REPLACED PER ADDENDUM No. 1 DATED DECEMBER 4, 2014

DRAINAGE QUANTITIES

DQ-2

STATE OF CALIFORNIA - DEPARTMENT OF TRANSPORTATION
Caltrans
03-DESIGN

FUNCTIONAL SUPERVISOR: MASTRI ALVANDI
CALCULATED-DESIGNED BY: JOHN WELCH
CHECKED BY: KIDIANGA TSHIUNZA
REVISED BY
DATE REVISED

LAST REVISION 06-17-14
DATE PLOTTED => 02-DEC-2014
TIME PLOTTED => 15:06

Dist	COUNTY	ROUTE	POST MILES TOTAL PROJECT	No.	SHEETS
03	ED	89	24.9/27.2	54	116

REGISTERED CIVIL ENGINEER 6-23-14 DATE

6-23-14
PLANS APPROVAL DATE

REGISTERED PROFESSIONAL ENGINEER JOHN WELCH No. 58303 Exp. 6/30/14 CIVIL STATE OF CALIFORNIA

THE STATE OF CALIFORNIA OR ITS OFFICERS OR AGENTS SHALL NOT BE RESPONSIBLE FOR THE ACCURACY OR COMPLETENESS OF SCANNED COPIES OF THIS PLAN SHEET.

NOTE:

1. IG STATION IS AT THE CENTER OF THE IG.

DRAINAGE QUANTITIES

ADJUST INLET	INLET DEPRESSION	REMOVE CULVERT	CLEAN OUT RISER AND COVER (12" PLASTIC PIPE)	8" PLASTIC PIPE	12" PLASTIC PIPE	18" PLASTIC PIPE	30" CORRUGATED STEEL PIPE (.109"THICK)	REMOVE HEADWALL	48" REINFORCED CONCRETE PIPE (*)	PLACE 48" REINFORCED CONCRETE PIPE	~~48" CURED IN PLACE PIPELINER~~	~~60" CURED IN PLACE PIPELINER~~	~~CLEANING, INSPECTING, AND PREPARING CULVERT~~	HEIGHT OF INLET "H" (N)	MINOR CONCRETE (MINOR STRUCTURE)	MINOR CONCRETE (GUTTER DEPRESSION)	MISCELLANEOUS IRON AND STEEL	BAR REINFORCING STEEL (EPOXY COATED)	CABLE RAILING	FRAME AND GRATE (TYPE 24-12X) (N)	CONCRETE BACKFILL (PIPE TRENCH)	CLASS 6 PERMEABLE MATERIAL (BLANKET)	CLASS 3 PERMEABLE MATERIAL (BLANKET)	SAND BEDDING	FILTER FABRIC (CLASS D) (N)	12" PERFORATED PLASTIC PIPE	DRAINAGE INLET MARKER	MARKER (CULVERT)	DESCRIPTION	STATION "A1" LINE	DRAINAGE SHEET No.	DRAINAGE SYSTEM No.	DRAINAGE UNIT
EA	EA	LF	EA	LF	LF	LF	LF	EA	LF	LF	LF	LF	LF	LF	CY	CY	LB	LB	LF	EA	CY	CY	CY	CY	SQYD	LF	EA	EA					
												~~50~~	~~50~~															~~2~~	~~CULVERT LINER~~	~~821+65.41~~	~~D-6~~	~~19~~	~~a~~
	1																										1	2	INLET DEPRESSION	845+49.22	D-7	20	a
1															0.2		47	3											ADJUST INLET				b
														3.33	1.0		239			1			0.22		4		1		Mod G1 DI	846+94.70	D-7	21	a
			2		8																	20		2.5	93	98			IG	847+21.66			b
														3.33	1.0		239			1			0.22		4		1		Mod G1 DI	847+48.30			c
														4.00	1.3		239			1			0.22		4		1		Mod G3 DI	869+91.03	D-8	22	a
														4.00	1.3		239			1			0.22		4		1		Mod G3 DI	869+95.01			b
														4.00	1.3		239			1			0.22		4		1		Mod G3 DI	869+98.93			c
				1																									CONNECTING PIPE	870+00.89			d
														4.00	1.3		239			1			0.22		4		1		Mod G3 DI	870+02.89			e
			6		13																	36		3.9	113	150			IG	869+87.87			f
														3.25	1.1		239			1			0.22		4		1		Mod G3 DI	871+05.62	D-8	23	a
														3.25	1.1		239			1			0.22		4		1		Mod G3 DI	871+01.67			b
				1																									CONNECTING PIPE	870+99.55			c
														3.25	1.1		239			1			0.22		4		1		Mod G3 DI	870+97.55			d
			4		12																	15		2.0	64	75			IG	870+87.48			e
1	1	0	12	2	33	0	0	0	0	0	~~0~~	~~50~~	~~50~~	-	10.7	0	2,198	3	0	9	0	71	1.98	8.4	306	323	10	~~4~~ 2	SHEET TOTAL				
0	2	0	14	1	24	53.4	0	0	0	0	~~86.3~~	~~0~~	~~87~~	-	22.6	0	4,302	0	0	18	0	119	3.74	11.2	541	439	18	~~4~~ 2	SHEET DQ-1				
0	0	192.9	7	6	8	0	61	2	126.6	126.6	~~0~~	~~0~~	~~0~~	-	30.7	2.9	2,868	944	50	12	58.5	40	2.69	7.1	249	282	12	4	SHEET DQ-2				
1	3	192.9	33	9	65	53.4	61	2	126.6	126.6	~~86.3~~	~~50~~	~~137~~	-	64.0	2.9	9,368	947	50	39	58.5	230	8.41	26.7	1,096	1,044	40	~~12~~ 8	TOTAL				

(*) STATE FURNISHED MATERIAL
(N) NOT A SEPARATE PAY ITEM, FOR INFORMATION ONLY

1 REPLACED PER ADDENDUM No. 1 DATED DECEMBER 4, 2014

DRAINAGE QUANTITIES

DQ-3

STATE OF CALIFORNIA - DEPARTMENT OF TRANSPORTATION
03-DESIGN
Caltrans

CALCULATED-DESIGNED BY JOHN WELCH
CHECKED BY KIDIANGA TSHIUNZA
FUNCTIONAL SUPERVISOR MASTRI ALVANDI
REVISED BY
DATE REVISED

LAST REVISION 06-17-14
DATE PLOTTED => 02-DEC-2014
TIME PLOTTED => 15:06

Dist	COUNTY	ROUTE	POST MILES TOTAL PROJECT	No.	SHEETS
03	ED	89	24.9/27.2	81	116

John D. Welch 6-23-14
REGISTERED CIVIL ENGINEER DATE

6-23-14
PLANS APPROVAL DATE

REGISTERED PROFESSIONAL ENGINEER
JOHN WELCH
No. 58303
Exp. 6/30/14
CIVIL
STATE OF CALIFORNIA

THE STATE OF CALIFORNIA OR ITS OFFICERS OR AGENTS SHALL NOT BE RESPONSIBLE FOR THE ACCURACY OR COMPLETENESS OF SCANNED COPIES OF THIS PLAN SHEET.

ROADWAY QUANTITIES

1

STATION "A1" LINE	COLD PLANE ASPHALT CONCRETE PAVEMENT	CLASS 2 AGGREGATE BASE	HOT MIX ASPHALT (TYPE A)	DITCH EXCAVATION	PLACE HOT MIX ASPHALT (Misc AREA)	MINOR HOT MIX ASPHALT	TACK COAT
	SQYD	CY	TON	CY	SQYD	TON	TON
753+88.00 TO 876+10.00 L+/R+ MAINLINE	33,612		4,693.4				8.20
FROM DRIVEWAY/ROAD CONFORMS, THIS SHEET	2,466		287.4		554	56.1	0.51
FROM SAFETY EDGE AND SHOULDER BACKING, THIS SHEET			2.5				
FROM CONSTRUCT SHOULDER TABLE, SHEET Q-2		1,610	1170.8				0.52
FROM HMA DIKE TABLE, SHEET Q-2						2.2	
FROM PLACE HMA (Misc AREA) TABLE, SHEET Q-2		18		32	213	30.0	
FROM DITCH EXCAVATION TABLE, SHEET Q-3				442			
TOTAL	36,078	1,628	6,154.1	474	767	88.3	9.23

DRIVEWAY/ROAD CONFORMS

SHEET No.	STATION "A1" LINE	SIDE	CONFORM No.	CASE	COLD PLANE ASPHALT CONCRETE PAVEMENT	HOT MIX ASPHALT (TYPE A)	MINOR HOT MIX ASPHALT	PLACE HOT MIX ASPHALT (Misc AREA)	TACK COAT	DESCRIPTION
					SQYD	TON	TON	SQYD	TON	
L-1	759+14.94 TO 759+55.65	L+	1	A	64	12.7			0.02	USFS MEEKS STATION
L-2	764+33.56 TO 767+23.91	R+	2	A	746	125.9			0.19	MEEKS RESORT
L-3	779+95.45 TO 781+23.16	L+	3	C	139		14.1	139	0.03	DRIVEWAY
L-4	792+53.57 TO 795+00.59	L+	4	B	363	49.0			0.09	GLENRIDGE PARKWAY
L-5	809+89.88 TO 812+37.67	R+	5	B	372	50.2			0.09	SUGAR PINE POINT DAY USE
L-6	818+53.55 TO 818+62.96	R+	6	C	10		1.0	10		BIKE PATH
L-6	818+55.16 TO 818+65.24	L+	7	C	5		0.6	5		BIKE PATH
L-7	840+26.65 TO 840+34.62	L+	8	C	4		0.4	4		BIKE PATH
L-7	840+24.00 TO 840+36.59	R+	9	C	6		0.6	6		BIKE PATH
L-8	845+06.97 TO 847+39.59	L+	10	B	367	49.6			0.09	SUGAR PINE POINT ST. PK
L-9	859+82.97 TO 860+67.63	R+	11	C	36		3.6	36		DRIVEWAY
L-9	862+45.42 TO 863+07.43	R+	12	C	32		3.3	32		DRIVEWAY
L-9	863+82.17 TO 864+89.23	R+	13	C	52		5.2	52		DRIVEWAY
L-9	865+77.91 TO 866+38.57	R+	14	C	31		3.1	31		DRIVEWAY
L-10	867+07.34 TO 868+62.19	R+	15	C	75		7.6	75		DRIVEWAY
L-10	868+73.20 TO 869+16.92	R+	16	C	22		2.3	22		DRIVEWAY
L-10	870+78.05 TO 871+13.56	R+	17	C	16		1.6	16		DRIVEWAY
L-10	872+44.34 TO 872+97.50	L+	18	C	26		2.6	26		DRIVEWAY
L-10	874+42.31 TO 875+39.60	R+	19	C	49		5.0	49		DRIVEWAY
L-10	875+51.18 TO 876+03.81	L+	20	C	27		2.7	27		DRIVEWAY
L-10	875+57.00 TO 876+04.56	R+	21	C	24		2.4	24		DRIVEWAY
			SUBTOTAL		2,466*	287.4*	56.1*	554*	0.51*	

* QUANTITIES INCLUDED IN ROADWAY QUANTITIES TABLE, THIS SHEET.

SAFETY EDGE AND SHOULDER BACKING

LAYOUT SHEET No.	STATION "A1" LINE	SIDE	(N) DEPTH	(N) LENGTH	HOT MIX ASPHALT (TYPE A)	SHOULDER BACKING
			LF	LF	TON	TON
1	754+65.30 TO 756+43.62	L+	0.20	178		5
1	755+93.62 TO 756+43.62	L+	0.20-0.25	50	0.1	
2,3	762+04.00 TO 779+95.45	L+	0.20-0.25	1,791		50
2	762+04.00 TO 769+00.00	L+	0.20-0.25	696	1.8	
3,4	781+23.16 TO 790+31.22	L+	0.20	908		20
4	791+01.64 TO 792+53.57	L+	0.20	152		3
4,5	795+00.59 TO 811+37.63	L+	0.20	1,637		37
5,6	811+60.90 TO 817+58.14	L+	0.20	597		13
6	818+32.27 TO 818+55.16	L+	0.20	23		1
6,7	818+65.24 TO 836+56.45	L+	0.20	1,791		40
7	838+24.58 TO 840+26.65	L+	0.20	202		5
7,8	840+34.62 TO 844+41.71	L+	0.20	407		9
8,9,10	848+85.42 TO 869+49.52	L+	0.20	2,065		46
10	871+41.57 TO 872+44.34	L+	0.20	104		2
10	872+97+50 TO 875+51.18	L+	0.20	268		6
1	754+70.19 TO 756+43.62	R+	0.20	174		8
1	755+93.62 TO 756+43.62	R+	0.20-0.25	50	0.1	
2,3	767+23.91 TO 778+72.02	R+	0.20-0.25	1,148		32
2	767+23.91 TO 769+00.00	R+	0.20-0.25	175	0.5	
3,4	780+84.36 TO 788+57.47	R+	0.20	773		17
4,5	789+13.36 TO 809+89.88	R+	0.20	2,077		47
5,6	812+37.67 TO 818+45.97	R+	0.20	608		14
6,7	821+50.00 TO 835+31.10	R+	0.20	1,381		31
7	836+87.75 TO 840+24.00	R+	0.20	336		8
7,8	840+36.59 TO 844+80.83	R+	0.20	444		10
8	847+31.71 TO 848+56.82	R+	0.20	125		3
8,9	849+53.66 TO 857+17.95	R+	0.20	764		17
9	858+10.85 TO 859+82.97	R+	0.20	172		4
9	860+67.63 TO 862+45.42	R+	0.20	178		4
9	863+07.43 TO 863+82.17	R+	0.20	75		2
9	864+89.23 TO 865+77.91	R+	0.20	89		2
9	866+38.57 TO 867+07.43	R+	0.20	70		2
10	868+62.19 TO 868+73.20	R+	0.20	11		1
10	869+16.92 TO 870+78.05	R+	0.20	161		4
10	871+13.56 TO 874+42.31	R+	0.20	328		7
10	875+39.60 TO 875+57.00	R+	0.20	18		1
				SUBTOTAL	2.5*	-
				TOTAL	-	451

* QUANTITIES INCLUDED IN ROADWAY QUANTITIES TABLE, THIS SHEET.
(N) NOT A SEPARATE PAY ITEM. FOR INFORMATION ONLY.

1 REPLACED PER ADDENDUM No. 1 DATED DECEMBER 4, 2014

SUMMARY OF QUANTITIES

Q-1

STATE OF CALIFORNIA - DEPARTMENT OF TRANSPORTATION
Caltrans 03-DESIGN
FUNCTIONAL SUPERVISOR: MASTRI ALVANDI
CALCULATED-DESIGNED BY: JOHN WELCH
CHECKED BY: KIDIANGA TSHIUNZA
REVISED BY
DATE REVISED

LAST REVISION 06-17-14
DATE PLOTTED => 02-DEC-2014
TIME PLOTTED => 15:06

Dist	COUNTY	ROUTE	POST MILES TOTAL PROJECT	No.	SHEETS
03	ED	89	24.9/27.2	82	116

John D. Welch 6-23-14
REGISTERED CIVIL ENGINEER DATE

6-23-14
PLANS APPROVAL DATE

REGISTERED PROFESSIONAL ENGINEER
JOHN WELCH
No. 58303
Exp. 6/30/14
CIVIL
STATE OF CALIFORNIA

THE STATE OF CALIFORNIA OR ITS OFFICERS OR AGENTS SHALL NOT BE RESPONSIBLE FOR THE ACCURACY OR COMPLETENESS OF SCANNED COPIES OF THIS PLAN SHEET.

NOTES:

1. CONSTRUCT SHOULDER QUANTITIES INCLUDE 1' SAWCUT.
2. QUANTITY INCLUDED IN ROADWAY QUANTITIES TABLE, SHEET Q-1.

CONSTRUCT SHOULDER

SHEET No.	STATION "A1" LINE	SIDE	ROADWAY EXCAVATION	CLASS 2 AGGREGATE BASE	HOT MIX ASPHALT (TYPE A)	TACK COAT	(N) EMBANKMENT	(N) WIDTH
			CY	CY	TON	TON	CY	FT
L-1	754+15.20 TO 755+02.24	L†	26	0	13.2	0.01	5	4
L-1	754+15.72 TO 755+02.24	R†	31	16	9.6	0.01	6	6
L-1/L-2	756+43.62 TO 762+04.00	L†	246	317	290.7	0.10	26	12
L-1/L-2	756+43.62 TO 764+49.00	R†	359	460	417.6	0.14	43	12
L-3	778+72.22 TO 780+28.00	R†	76	73	36.6	0.02	2	12
L-4	790+31.30 TO 791+01.60	L†	21	18	7.5	0.01	1	4
L-4	794+02.74 TO 794+08.74	L†	1	1	0.1	0.01	1	3
L-4	794+12.70 TO 794+40.63	L†	7	5	0.8	0.01	1	3
L-5	805+61.27 TO 806+77.88	L†	44	45	21.5	0.01	1	10
L-6	817+58.14 TO 818+32.27	L†	36	38	19.2	0.01	1	12
L-6	818+57.31 TO 821+50.00	R†	161	167	103.0	0.04	62	16
L-7	835+31.10 TO 836+87.91	R†	85	76	38.7	0.02	1	14
L-7	836+56.35 TO 838+24.25	L†	104	88	45.6	0.03	1	14
L-8	844+41.85 TO 846+04.83	L†	32	21	12.9	0.01	1	2-6
L-8	844+80.93 TO 847+50.66	R†	99	96	48.9	0.04	4	8-16
L-8	846+43.47 TO 848+85.08	L†	73	58	34.6	0.02	1	2-10
L-8	848+56.82 TO 849+53.66	R†	57	50	25.6	0.01	4	12
L-9	857+17.65 TO 858+10.97	R†	38	40	19.5	0.01	4	8
L-10	869+64.52 TO 871+31.91	L†	45	41	25.2	0.01	2	4-10
SUBTOTAL				1,610*	1170.8*	0.52*	-	
TOTAL			1,541				167	

(N) NOT A SEPARATE PAY ITEM. FOR INFORMATION ONLY.

TEMPORARY WATER POLLUTION CONTROL QUANTITIES

STATION "A1" LINE	TEMPORARY FIBER ROLL (6")	MOVE IN / MOVE OUT (TEMPORARY EROSION CONTROL)	TEMPORARY HYDRAULIC MULCH (BONDED FIBER MATRIX)	TEMPORARY COVER	TEMPORARY DRAINAGE INLET PROTECTION	TEMPORARY LARGE SEDIMENT BARRIER	TEMPORARY CHECK DAM
	LF	EA	SQYD	SQYD	EA	LF	LF
753+88 TO 876+10 (L†/R†)	10,800	6	2,710	2,710	24	1,800	450
TOTAL	10,800	6	2,710	2,710	24	1,800	450

* SEE NOTE 2

REMOVE SACKED CONCRETE

STATION "A1" LINE	SIDE	REMOVE SACKED CONCRETE
		CY
820+71.94 TO 821+21.25	R†	24
TOTAL		24

PLACE HOT MIX ASPHALT (Misc AREA)

STATION "A1" LINE	SIDE	PLACE HOT MIX ASPHALT (Misc AREA)	MINOR HOT MIX ASPHALT	DITCH EXCAVATION	CLASS 2 AGGREGATE BASE	DESCRIPTION
		SQYD	TONS	CY	CY	
754+74.00	L†	4	0.6	2		HMA OVERSIDE DRAIN
754+79.00	R†	4	0.6	2		HMA OVERSIDE DRAIN
810+42.60 TO 810+73.92	R†	28	4.7	7	5	HMA DITCH
819+36.53 TO 820+20.07	L†	12	2.9	2		0.35' HMA BASE UNDER DIKE (TYPE E)
820+16.07 TO 820+94.96	L†	89	8.4			BIKE PATH SLOPE ADJUSTMENT
845+38.39 TO 845+91.50	L†	25	4.1	6	4	HMA DITCH
846+46.95 TO 847+81+00	L†	51	8.7	13	9	HMA DITCH
SUBTOTAL		213*	30.0*	32*	18*	

HOT MIX ASPHALT DIKE 1

STATION "A1" LINE	SIDE	PLACE HOT MIX ASPHALT DIKE (TYPE E)	MINOR HOT MIX ASPHALT
		LF	TON
819+36.53 TO 820+20.07	L†	84	2.2
SUBTOTAL		-	2.2*
TOTAL		84	-

1 REPLACED PER ADDENDUM No. 1 DATED DECEMBER 4, 2014

SUMMARY OF QUANTITIES

Q-2

REVISED BY | DATE REVISED
JOHN WELCH | KIDIANGA TSHIUNZA
CALCULATED-DESIGNED BY | CHECKED BY
FUNCTIONAL SUPERVISOR | MASTRI ALVANDI
STATE OF CALIFORNIA - DEPARTMENT OF TRANSPORTATION
Caltrans
03-DESIGN

LAST REVISION 06-17-14 | DATE PLOTTED => 02-DEC-2014 | TIME PLOTTED => 15:06

Dist	COUNTY	ROUTE	POST MILES TOTAL PROJECT	No.	SHEETS
03	ED	89	24.9/27.2	83	116

John D. Welch 6-23-14
REGISTERED CIVIL ENGINEER DATE

6-23-14
PLANS APPROVAL DATE

REGISTERED PROFESSIONAL ENGINEER JOHN WELCH No. 58303 Exp. 6/30/14 CIVIL STATE OF CALIFORNIA

THE STATE OF CALIFORNIA OR ITS OFFICERS OR AGENTS SHALL NOT BE RESPONSIBLE FOR THE ACCURACY OR COMPLETENESS OF SCANNED COPIES OF THIS PLAN SHEET.

1 REPLACED PER ADDENDUM No. 1 DATED DECEMBER 4, 2014

NOTES:

1. FOR REPLACE AC SURFACING, EXACT LOCATIONS TO BE DETERMINED BY THE ENGINEER.
2. FOR TREATED WOOD WASTE, SEE PD SHEETS FOR SIGN REMOVAL LOCATIONS.

TEMPORARY FENCE

STATION "A1" LINE	SIDE	TEMPORARY FENCE (TYPE ESA)
		LF
754+20 TO 755+90	R+	220
755+60 TO 759+20	L+	350
812+00 TO 814+00	R+	200
815+25 TO 816+75	R+	145
814+70 TO 816+80	L+	250
819+40 TO 820+22	L+	100
820+45 TO 820+84	L+	50
820+60 TO 820+75	R+	30
821+20 TO 821+85	R+	70
824+85 TO 826+75	R+	200
TOTAL		1,615

DITCH EXCAVATION

STATION "A1" LINE	SIDE	VOLUME
		CY
756+61.50 TO 761+00.00	R+	140
759+54.94 TO 761+22.22	L+	37
761+80.14 TO 764+00.00	L+	38
762+04.00 TO 763+09.17	R+	3
763+60.00 TO 764+25.00	R+	32
789+86.50 TO 791+25.00	L+	3
792+94.82 TO 793+38.95	L+	8
805+25.00 TO 806+55.00	L+	13
810+43.43 TO 810+78.43	R+	5
817+00.00 TO 817+60.00	R+	16
817+93.13 TO 818+57.31	R+	13
820+34.40 TO 820+57.62	R+	4
827+06.60 TO 828+30.96	L+	15
831+28.38 TO 832+06.33	L+	19
844+88.93 TO 846+15.88	R+	12
845+27.28 TO 846+03.16	L+	5
846+45.84 TO 847+88.75	L+	5
854+65.67 TO 855+37.99	L+	14
860+92.98 TO 861+75.63	L+	19
866+88.93 TO 867+77.30	L+	38
870+04.86 TO 870+78.12	L+	3
SUBTOTAL		442*

* QUANTITY INCLUDED IN ROADWAY QUANTITIES TABLE, SHEET Q-1.

REPLACE ASPHALT CONCRETE SURFACING

STATION "A1" LINE	SIDE	(N) LENGTH	(N) WIDTH	(N) DEPTH	REPLACE ASPHALT CONCRETE SURFACING
		LF	LF	LF	CY
755+00 TO 756+43	L+	143	12	0.4	25
756+43 TO 758+50	L+	207	12	0.6	55
762+00 TO 766+30	L+	430	12	0.6	115
766+30 TO 769+00	L+	270	6	0.6	36
769+00 TO 771+00	L+	200	6	0.4	18
772+20 TO 773+20	L+	100	6	0.4	9
774+20 TO 779+50	L+	530	12	0.4	94
779+50 TO 782+50	L+	300	12	0.4	53
792+80 TO 793+85	L+	105	12	0.7	33
755+00 TO 756+43	R+	143	12	0.4	25
756+43 TO 757+50	R+	107	12	0.6	29
757+50 TO 758+50	R+	100	6	0.6	13
762+00 TO 763+00	R+	100	12	0.6	27
763+00 TO 764+50	R+	150	6	0.6	20
766+00 TO 767+50	R+	150	6	0.6	20
769+50 TO 771+50	R+	200	12	0.4	36
771+70 TO 772+20	R+	50	6	0.4	4
773+20 TO 779+50	R+	630	12	0.4	112
792+80 TO 793+85	R+	105	12	0.7	33
TOTAL					757

(N) NOT A SEPARATE PAY ITEM. FOR INFORMATION ONLY.

CRACK TREATMENT

POST MILE		(N) DISTANCE	(N) LANES	CRACK TREATMENT
BEGIN	END	MILE	No.	LANE MILE
24.9	27.2	2.3	2	4.6
			TOTAL	4.6

(N) NOT A SEPARATE PAY ITEM. FOR INFORMATION ONLY.

TREATED WOOD WASTE

STATION "A1" LINE	SIDE	TREATED WOOD WASTE	DESCRIPTION
		LB	
754+88 TO 876+10	L+/R+	350	SIGN POST
TOTAL		350	

ROCK SLOPE PROTECTION (RSP)

STATION "A1" LINE	SIDE	(N) LENGTH	RSP (No. 1, METHOD B)	RSP (No. 3, METHOD B)	ROCK SLOPE PROTECTION FABRIC (CLASS 8)	DESCRIPTION
		LF	CY	CY	SQYD	
754+74.00	L+	14		2.0	11	ROCK LINED DITCH
754+79.00	R+	14		2.0	11	ROCK LINED DITCH
770+75 to 771+30	R+	55	30.6		74	ROCK BERM
790+59 to 790+89	L+	30		3.3	17	ROCK LINED DITCH
854+81.70 TO 855+21.85	L+			1.0	4	CHECK DAM (3 TOTAL)
861+16.18 TO 861+56.18	L+			1.5	5	CHECK DAM (3 TOTAL)
867+11.85 TO 867+52.71	L+			1.5	5	CHECK DAM (3 TOTAL)
TOTAL			30.6	11.3	127	

(N) NOT A SEPARATE PAY ITEM. FOR INFORMATION ONLY.

MINOR CONCRETE (CURB AND GUTTER) 1

STATION "A1" LINE	SIDE	(N) MOD TYPE D-4	(N) TYPE B2-6	(N) TYPE A1-6	MINOR CONCRETE (CURB AND GUTTER)
		LF	LF	LF	CY
754+15.20 TO 754+65.30	L+	50.1			6.1
754+15.72 TO 754+70.19	R+	54.5			6.6
794+03.69 TO 794+40.63	L+		40.5		2.5
818+57.31 TO 819+00.76	R+	42.7			5.2
819+12.61 TO 820+49.66	R+	137.9			16.7
820+53.62 TO 821+21.25	R+	67.7			8.2
869+74.52 TO 869+89.05	L+			15.0	0.4
870+78.12 TO 870+95.44	L+			18.2	0.5
871+07.59 TO 871+27.55	L+			20.8	0.6
TOTAL		352.9	40.5	54.0	46.8

(N) NOT A SEPARATE PAY ITEM. FOR INFORMATION ONLY.

REMOVE ASPHALT CONCRETE PAVEMENT

STATION "A1" LINE	SIDE	REMOVE ASPHALT CONCRETE PAVEMENT
		SQFT
792+58.50 TO 793+21.70	L+	2,876
TOTAL		2,876

SUMMARY OF QUANTITIES

Q-3

REVISED BY | DATE REVISED
JOHN WELCH | KIDIANGA TSHIUNZA
CALCULATED-DESIGNED BY | CHECKED BY
FUNCTIONAL SUPERVISOR | MASTRI ALVANDI

STATE OF CALIFORNIA - DEPARTMENT OF TRANSPORTATION
03-DESIGN

LAST REVISION 06-17-14 | DATE PLOTTED => 02-DEC-2014 | TIME PLOTTED => 15:06