Dist	COUNTY	ROUTE	POST MILES TOTAL PROJECT	SHEET No.	TOTAL SHEETS
03	Sac	99	0.1/12.0	1	73

STATE OF CALIFORNIA
DEPARTMENT OF TRANSPORTATION

PROJECT PLANS FOR CONSTRUCTION ON
STATE HIGHWAY

IN SACRAMENTO COUNTY NEAR GALT FROM 0.1 MILE SOUTH OF CRYSTAL WAY TO 1.9 MILES NORTH OF GRANT LINE ROAD

TO BE SUPPLEMENTED BY STANDARD PLANS DATED MAY 2006

INDEX OF PLANS

SHEET No.	DESCRIPTION
1	TITLE AND LOCATION MAP
2-3	TYPICAL CROSS SECTIONS
4-20	CONSTRUCTION DETAILS
21-22	CONSTRUCTION AREA SIGNS
23-25	STAGE CONSTRUCTION AND TRAFFIC HANDLING PLANS
26-29	DETOUR PLANS
30	SIGN PLAN DETAILS AND QUANTITIES
31-43	SUMMARY OF QUANTITIES
44-46	ELECTRICAL PLANS
47-70	REVISED AND NEW STANDARD PLANS

STRUCTURE PLANS

71-73	ROUTE 99 BRIDGES

THE STANDARD PLANS LIST APPLICABLE TO THIS CONTRACT IS INCLUDED IN THE NOTICE TO CONTRACTORS AND SPECIAL PROVISIONS BOOK

LOCATION MAP

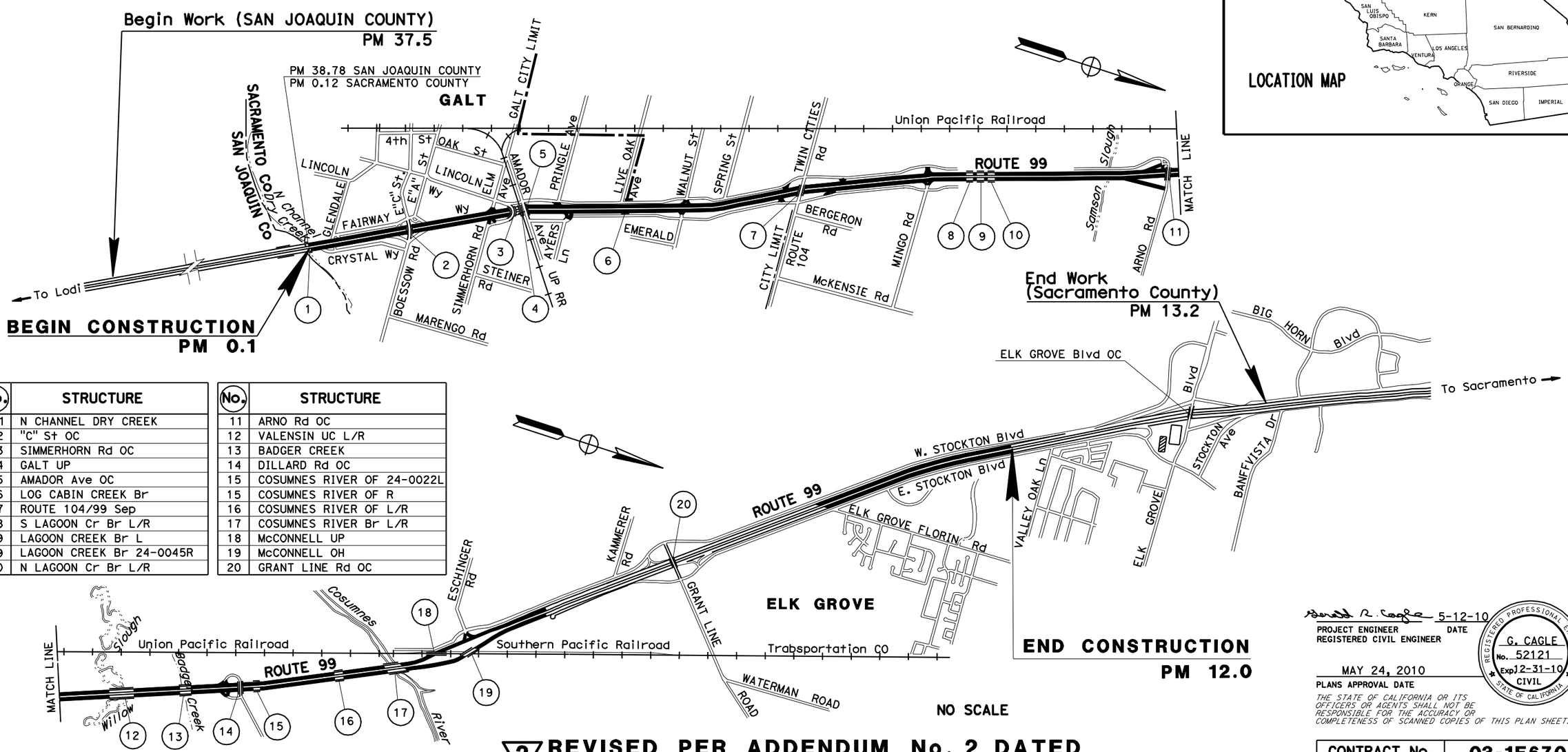

No.	STRUCTURE
1	N CHANNEL DRY CREEK
2	"C" St OC
3	SIMMERHORN Rd OC
4	GALT UP
5	AMADOR Ave OC
6	LOG CABIN CREEK Br
7	ROUTE 104/99 Sep
8	S LAGOON Cr Br L/R
9	LAGOON CREEK Br L
9	LAGOON CREEK Br 24-0045R
10	N LAGOON Cr Br L/R

No.	STRUCTURE
11	ARNO Rd OC
12	VALENSIN UC L/R
13	BADGER CREEK
14	DILLARD Rd OC
15	COSUMNES RIVER OF 24-0022L
15	COSUMNES RIVER OF R
16	COSUMNES RIVER OF L/R
17	COSUMNES RIVER Br L/R
18	McCONNELL UP
19	McCONNELL OH
20	GRANT LINE Rd OC

THE CONTRACTOR SHALL POSSESS THE CLASS (OR CLASSES) OF LICENSE AS SPECIFIED IN THE "NOTICE TO BIDDERS."

2 REVISED PER ADDENDUM No. 2 DATED OCTOBER 18, 2010

PROJECT MANAGER: M. MILLARD
DESIGN ENGINEER: G. OGAZ

5-12-10
PROJECT ENGINEER REGISTERED CIVIL ENGINEER — DATE

REGISTERED PROFESSIONAL ENGINEER G. CAGLE No. 52121 Exp 12-31-10 CIVIL STATE OF CALIFORNIA

MAY 24, 2010
PLANS APPROVAL DATE

THE STATE OF CALIFORNIA OR ITS OFFICERS OR AGENTS SHALL NOT BE RESPONSIBLE FOR THE ACCURACY OR COMPLETENESS OF SCANNED COPIES OF THIS PLAN SHEET.

CONTRACT No.	03-1E6704
PROJECT ID	0300001092

LAST REVISION 00-00-00
DATE PLOTTED => 18-OCT-2010
TIME PLOTTED => 11:09

Dist	COUNTY	ROUTE	POST MILES TOTAL PROJECT	SHEET No.	TOTAL SHEETS
03	Sac	99	0.1/12.0	2	73

REGISTERED CIVIL ENGINEER 5-24-10 DATE

5-24-10
PLANS APPROVAL DATE

REGISTERED PROFESSIONAL ENGINEER G. CAGLE No. 52121 Exp. 12-31-10 CIVIL STATE OF CALIFORNIA

THE STATE OF CALIFORNIA OR ITS OFFICERS OR AGENTS SHALL NOT BE RESPONSIBLE FOR THE ACCURACY OR COMPLETENESS OF SCANNED COPIES OF THIS PLAN SHEET.

2

NOTES:

1. MATCH EXISTING CROSS SLOPE ALL LOCATIONS.
2. SEE CONSTRUCTION DETAILS AND SUMMARY OF QUANTITIES SHEETS FOR HMA DIKE AND MBGR LOCATIONS.
3. PROJECT LIMITS ARE FROM EB NORTH CHANNEL DRY CREEK BRIDGE L/R TO PM 12.0, NB AND SB ROUTE 99.
4. NO WORK ON EXISTING STRUCTURES UNLESS OTHERWISE SHOWN IN THE PLANS.
5. POST MILES ARE APPROXIMATE.
6. TEMPORARY PAVEMENT WIDENING. SEE CONSTRUCTION DETAILS AND STAGE CONSTRUCTION AND TRAFFIC HANDLING PLANS FOR DETAILS.
7. DIMENSIONS OF THE STRUCTURAL SECTIONS ARE SUBJECT TO TOLERANCES SPECIFIED IN THE STANDARD SPECIFICATIONS.
8. OMIT BACKER RODS FOR LONGITUDINAL AND TRANSVERSE JOINT DETAILS. FILL IN WITH LIQUID JOINT SEALANT.

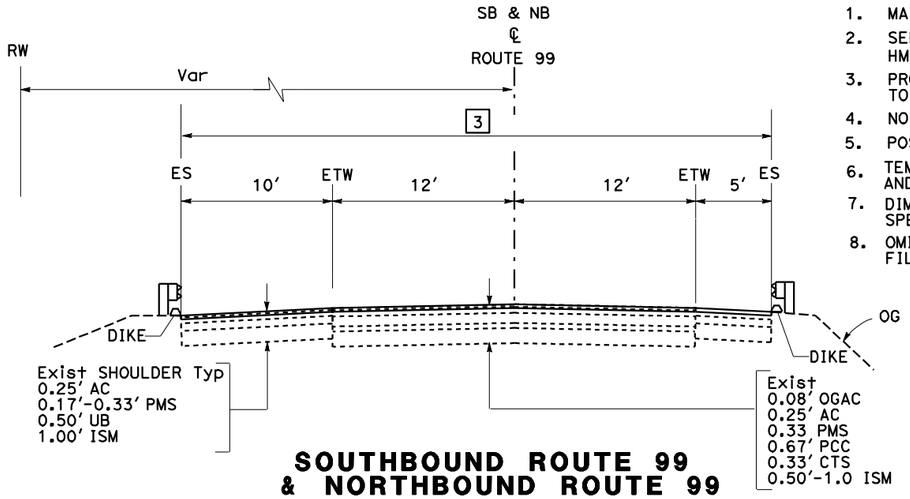

SOUTHBOUND ROUTE 99
& NORTHBOUND ROUTE 99

SB PM 4.96 TO 5.00
SB PM 5.07 TO 5.10
NB PM 4.97 TO 5.00
NB PM 5.05 TO 5.08

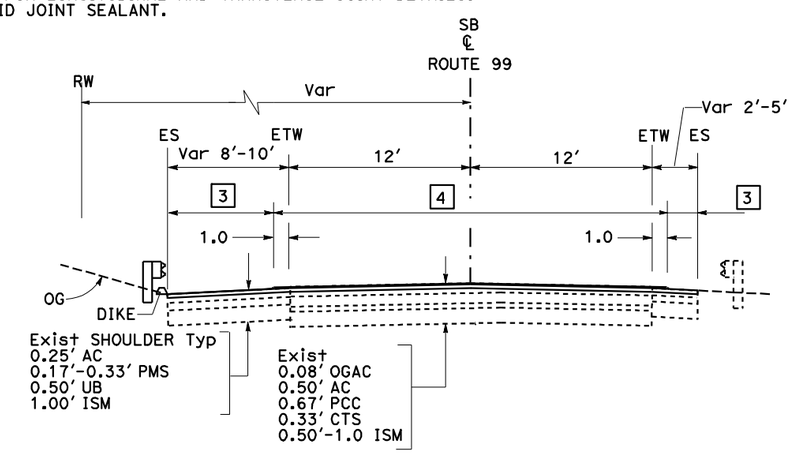

SOUTHBOUND ROUTE 99

PM 0.77 TO 0.85
PM 2.33 TO 2.40
PM 5.98 TO 6.07
PM 6.87 TO 6.96
PM 7.33 TO 7.45
PM 8.53 TO 8.81

STRUCTURAL SECTIONS

1. 0.25' HMA
2. COLD PLANE 0.08' OGAC
   0.1' RWMA-O
   0.25' HMA
3. COLD PLANE 0.27' AC
   0.25' HMA
4. COLD PLANE 0.08' OGAC AND 0.27' AC
   0.1' RWMA-O
   0.25' HMA
5. COLD PLANE 0.08' OGAC
   0.1' RWMA-O
6. 1.15' REPLACE CONCRETE PAVEMENT (RAPID STRENGTH CONCRETE)
   0.25' HMA
7. 0.7' HMA
   2.0' AB (CLASS 2)
8. FOG SEAL
9. 1.15' JPCP
   0.25' HMA

LEGEND

No.	STRUCTURAL SECTION
No. Exist	EXISTING STRUCTURAL SECTION

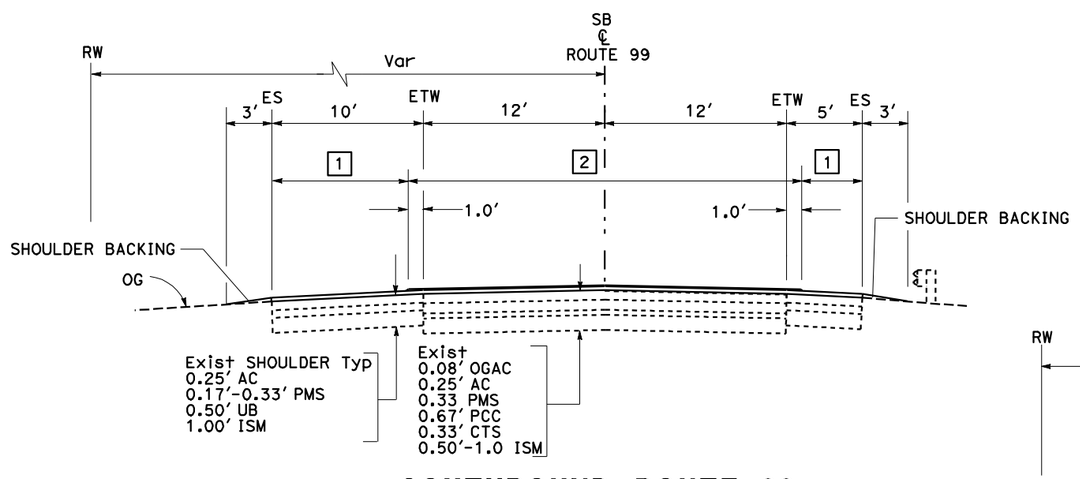

SOUTHBOUND ROUTE 99

PM 0.14 TO 0.77
PM 0.85 TO 1.38
PM 1.82 TO 2.33
PM 2.40 TO 3.39
PM 3.73 TO 4.93
PM 5.10 TO 5.98
PM 6.07 TO 6.56
PM 6.58 TO 6.86
PM 7.02 TO 7.33
PM 7.49 TO 7.93
PM 8.05 TO 8.40
PM 8.81 TO 9.35
PM 10.7 TO 12.0

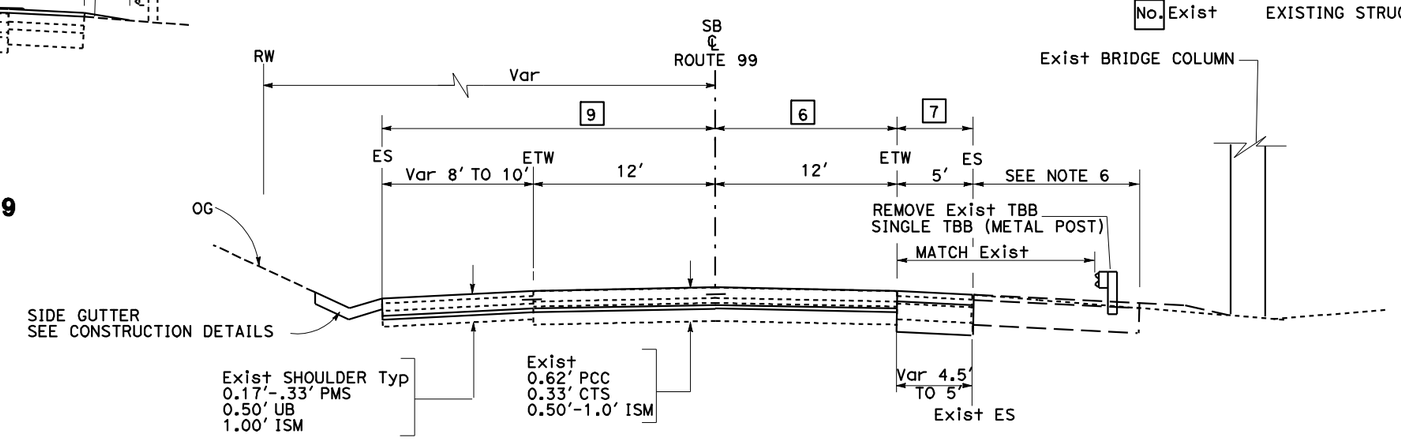

SOUTHBOUND ROUTE 99

PM 1.38 TO 1.82
PM 3.39 TO 3.73

ABBREVIATIONS

CTS	CEMENT TREATED SUBBASE
ISM	IMPORTED SUBBASE MATERIAL
PMS	PLANT MIX SURFACING (TYPE B)
RWMA-O	RUBBERIZED WARM MIX ASPHALT (TYPE O)
UB	UNTREATED BASE
WIM	WEIGH IN MOTION

2 **REVISED PER ADDENDUM No. 2 DATED OCTOBER 18, 2010**

TYPICAL CROSS SECTIONS

NO SCALE

X-1

STATE OF CALIFORNIA - DEPARTMENT OF TRANSPORTATION
NORTH REGION
OFFICE OF DESIGN, SOUTH
DESIGN BRANCH 2

FUNCTIONAL SUPERVISOR: GILBERT OGAZ

CALCULATED-DESIGNED BY: G. CAGLE
CHECKED BY: G. CAGLE
REVISED BY: G. CAGLE
DATE REVISED:

LAST REVISION 00-00-00
DATE PLOTTED => 18-OCT-2010
TIME PLOTTED => 11:09

Dist	COUNTY	ROUTE	POST MILES TOTAL PROJECT	SHEET No.	TOTAL SHEETS
03	Sac	99	0.1/12.0	23	73

REGISTERED CIVIL ENGINEER 5-24-10 DATE

5-24-10
PLANS APPROVAL DATE

REGISTERED PROFESSIONAL ENGINEER G. CAGLE No. 52121 Exp. 12-31-10 CIVIL STATE OF CALIFORNIA

THE STATE OF CALIFORNIA OR ITS OFFICERS OR AGENTS SHALL NOT BE RESPONSIBLE FOR THE ACCURACY OR COMPLETENESS OF SCANNED COPIES OF THIS PLAN SHEET.

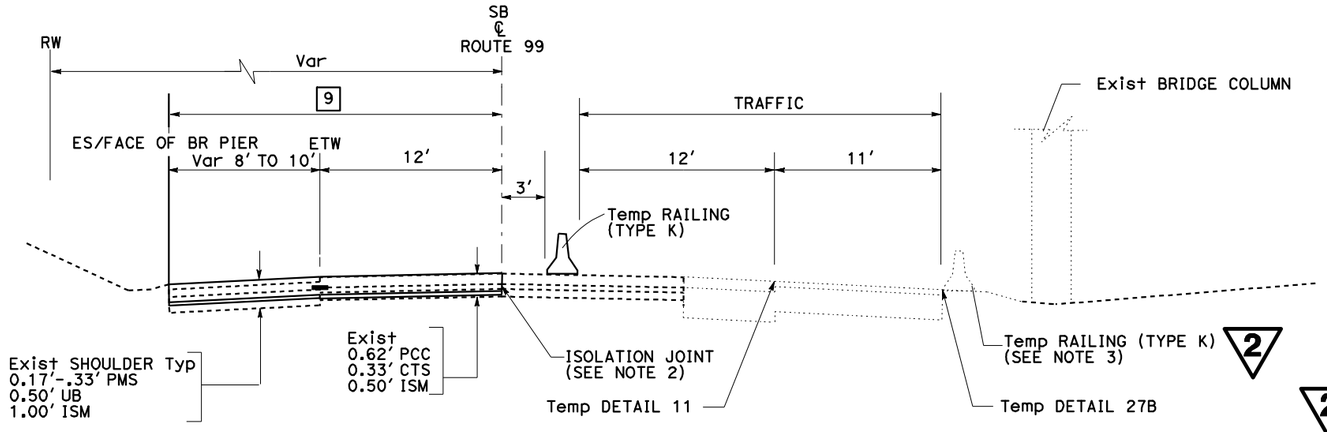

SOUTHBOUND ROUTE 99

PM 1.38 TO 1.82
PM 3.39 TO 3.73

STAGE 2

LEGEND

No.	STRUCTURAL SECTION NUMBER (SEE TYPICAL SECTIONS)
No. TEMP	TEMPORATRY STRUCTURAL SECTION NUMBER (SEE CONSTRUCTION DETATILS)

NOTES:

1. TEMPORARY STRUCTURAL SECTION FOR TEMPORARY PAVEMENT WIDENING SHALL BE REMOVED THROUGH THE HMA LAYER ONLY WHEN NO LONGER NEEDED FOR CONSTRUCTION STAGING AND THEN BACKFILLED WITH IB.
2. LONGITUDINAL ISOLATION JOINT FOR STAGE 2 WORK ONLY. REMOVE ISOLATION JOINT MATERIAL WITH ROADWAY EXCAVATION FOR ADJACENT LANE REMOVAL FOR STAGE 3 WORK.

* SEE CONSTRUCTION DETAILS

3. TEMPORARY RAILING (TYPE K) FROM STAGE 1 PLACEMENT TO BE LEFT IN PLACE FOR STAGE 2.

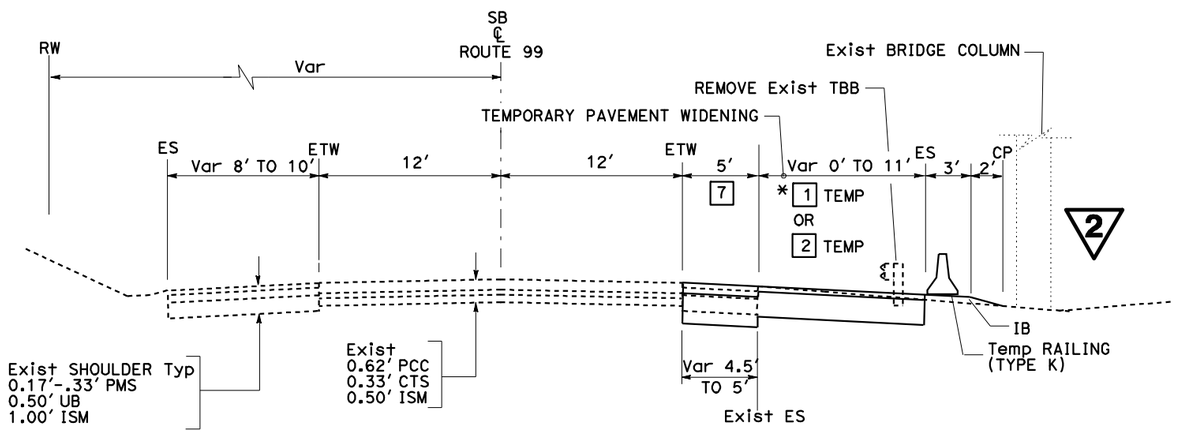

SOUTHBOUND ROUTE 99

PM 1.157 TO 2.060
PM 3.162 TO 3.970

STAGE 1

PCC LANE REPLACEMENT TRAFFIC HANDLING

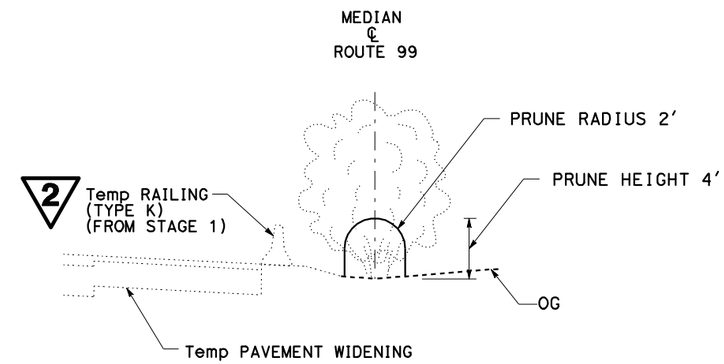

PRUNE EXISTING PLANTS

PM 1.38 TO 1.82
PM 3.39 TO 3.73

2 REVISED PER ADDENDUM No. 2 DATED OCTOBER 18, 2010

STAGE 1 & 2 STAGE CONSTRUCTION AND TRAFFIC HANDLING PLAN

NO SCALE

SC-1

STATE OF CALIFORNIA - DEPARTMENT OF TRANSPORTATION
NORTH REGION
OFFICE OF DESIGN, SOUTH
DESIGN BRANCH 2

FUNCTIONAL SUPERVISOR: GILBERT OGAZ
CALCULATED-DESIGNED BY: G. CAGLE
CHECKED BY: G. CAGLE
REVISED BY: G. CAGLE
DATE REVISED:

LAST REVISION 00-00-00
DATE PLOTTED => 18-OCT-2010
TIME PLOTTED => 11:09

Dist	COUNTY	ROUTE	POST MILES TOTAL PROJECT	SHEET No.	TOTAL SHEETS
03	Sac	99	0.1/12.0	24	73

REGISTERED CIVIL ENGINEER 5-24-10 DATE

5-24-10
PLANS APPROVAL DATE

REGISTERED PROFESSIONAL ENGINEER G. CAGLE No. 52121 Exp. 12-31-10 CIVIL STATE OF CALIFORNIA

THE STATE OF CALIFORNIA OR ITS OFFICERS OR AGENTS SHALL NOT BE RESPONSIBLE FOR THE ACCURACY OR COMPLETENESS OF SCANNED COPIES OF THIS PLAN SHEET.

2 REVISED PER ADDENDUM No. 2 DATED OCTOBER 18, 2010

* PROVIDE 40.0' MINIMUM OVERLAP BETWEEN EXISTING TBB AND TEMPORARY RAILING (TYPE K).

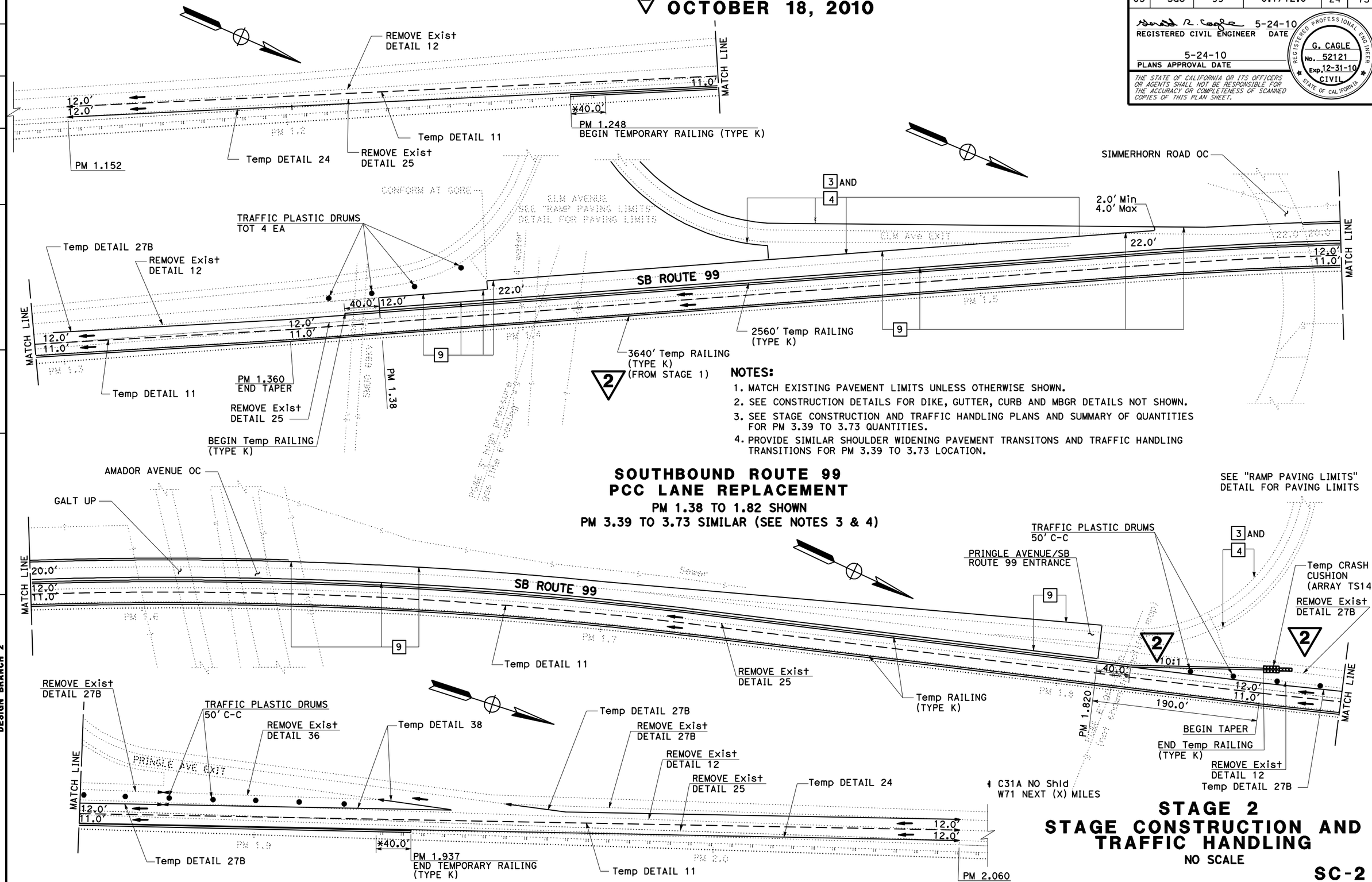

NOTES:

1. MATCH EXISTING PAVEMENT LIMITS UNLESS OTHERWISE SHOWN.
2. SEE CONSTRUCTION DETAILS FOR DIKE, GUTTER, CURB AND MBGR DETAILS NOT SHOWN.
3. SEE STAGE CONSTRUCTION AND TRAFFIC HANDLING PLANS AND SUMMARY OF QUANTITIES FOR PM 3.39 TO 3.73 QUANTITIES.
4. PROVIDE SIMILAR SHOULDER WIDENING PAVEMENT TRANSITONS AND TRAFFIC HANDLING TRANSITIONS FOR PM 3.39 TO 3.73 LOCATION.

SOUTHBOUND ROUTE 99
PCC LANE REPLACEMENT
PM 1.38 TO 1.82 SHOWN
PM 3.39 TO 3.73 SIMILAR (SEE NOTES 3 & 4)

STAGE 2
STAGE CONSTRUCTION AND TRAFFIC HANDLING
NO SCALE

SC-2

REVISED BY	G. CAGLE
DATE REVISED	
CALCULATED-DESIGNED BY	G. CAGLE
CHECKED BY	G. CAGLE
FUNCTIONAL SUPERVISOR	GILBERT OGAZ

STATE OF CALIFORNIA - DEPARTMENT OF TRANSPORTATION
NORTH REGION
OFFICE OF DESIGN, SOUTH
DESIGN BRANCH 2

LAST REVISION 00-00-00
DATE PLOTTED => 18-OCT-2010
TIME PLOTTED => 11:09

Dist	COUNTY	ROUTE	POST MILES TOTAL PROJECT	SHEET No.	TOTAL SHEETS
03	Sac	99	0.1/12.0	25	73

REGISTERED CIVIL ENGINEER 5-24-10 DATE

5-24-10
PLANS APPROVAL DATE

REGISTERED PROFESSIONAL ENGINEER G. CAGLE No. 52121 Exp. 12-31-10 CIVIL STATE OF CALIFORNIA

THE STATE OF CALIFORNIA OR ITS OFFICERS OR AGENTS SHALL NOT BE RESPONSIBLE FOR THE ACCURACY OR COMPLETENESS OF SCANNED COPIES OF THIS PLAN SHEET.

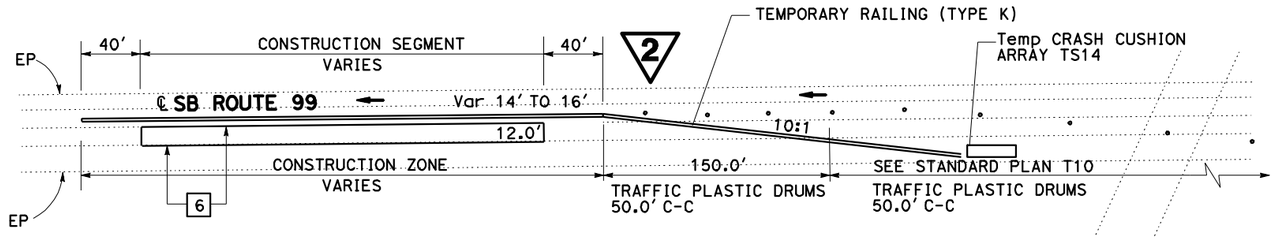

TYPICAL TRAFFIC HANDLING LAYOUT
STAGE STAGE 3

PM 1.38 TO 1.82
PM 3.39 TO 3.73

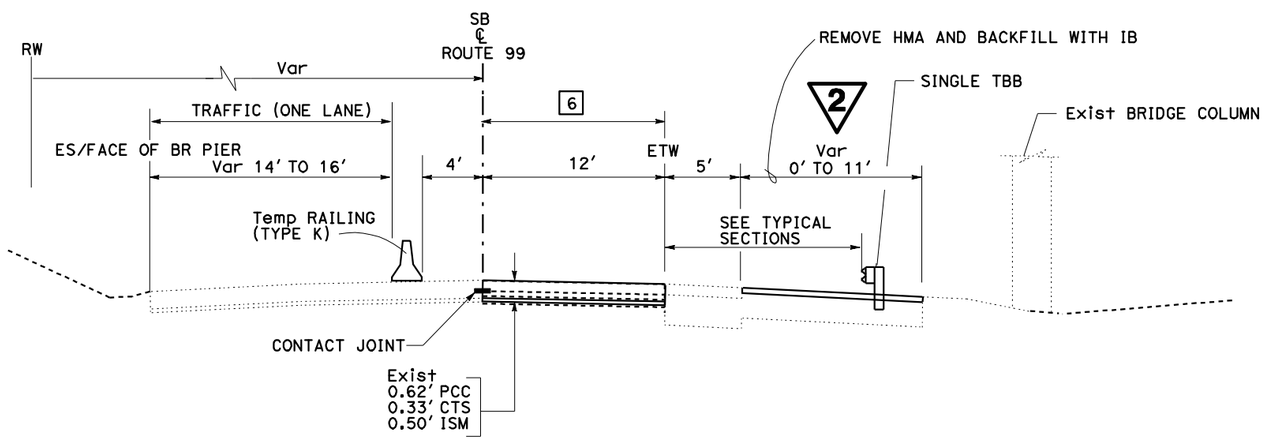

SOUTHBOUND ROUTE 99

PM 1.38 TO 1.82
PM 3.39 TO 3.73

STAGE 3

PCC LANE REPLACEMENT
TRAFFIC HANDLING

PRUNE EXISTING PLANTS

LOCATION	LENGTH (N)
PM TO PM	LF
1.38 TO 1.82	2,323
3.39 TO 3.73	1,795
TOTAL	4,118

(N) - NON PAY ITEM; FOR INFORMATIONAL PURPOSES ONLY

TEMPORARY TRAFFIC STRIPE

STAGE	POST MILE		DIRECTION	DETAIL No. PAINT 11	24	27B	38
				LF	LF	LF	LF
2	1.157	2.060	SB	4,795	4,795	1,130	400
	3.162	3.970	SB	4,267	4,267	1,130	400
				9,062	9,062	2,260	800
			TOTAL	21,184			

REMOVE TRAFFIC STRIPE

STAGE	POST MILE		DIRECTION	DETAIL No. PAINT 12	25	27B	36	MARKERS 12	25	36
				LF	LF	LF	LF	EA	EA	EA
2	1.157	2.060	SB	608	4,795	1,000	230	51	100	10
	3.162	3.970	SB	608	4,267	1,000	230	51	89	10
			SUB TOTAL	1,216	9,062	2,000	460	102	189	20
			TOTAL	12,738				311		

TEMPORARY PAVEMENT WIDENING

STAGE	POST MILE		DIRECTION	HMA (TYPE A)	CLASS 2 AB	ROADWAY EXCAVATION	IMPORTED BORROW
				TON	CY	CY	CY
1	1.157	2.060	SB	976.5	1,425.0	1,924.0	214.0
	3.162	3.970	SB	829.0	1,996.5	2,420.0	181.5
3	1.157	2.060	SB			499.0	499.0
	3.162	3.970	SB			423.5	423.5
			TOTAL	1,805.5	3,421.5	5,266.5	1,318.0

2 REVISED PER ADDENDUM No. 2 DATED OCTOBER 18, 2010

STAGE 3
STAGE CONSTRUCTION AND TRAFFIC HANDLING PLAN

NO SCALE

SC-3

STATE OF CALIFORNIA - DEPARTMENT OF TRANSPORTATION
NORTH REGION
OFFICE OF DESIGN, SOUTH
DESIGN BRANCH 2

FUNCTIONAL SUPERVISOR: GILBERT OGAZ
CALCULATED-DESIGNED BY: G. CAGLE
CHECKED BY: G. CAGLE
REVISED BY: G. CAGLE
DATE REVISED:

LAST REVISION 00-00-00 | DATE PLOTTED => 18-OCT-2010 | TIME PLOTTED => 11:09

Dist	COUNTY	ROUTE	POST MILES TOTAL PROJECT	SHEET No.	TOTAL SHEETS
03	Sac	99	0.1/12.0	32	73

REGISTERED CIVIL ENGINEER 5-24-10 DATE

5-24-10
PLANS APPROVAL DATE

REGISTERED PROFESSIONAL ENGINEER G. CAGLE No. 52121 Exp. 12-31-10 CIVIL STATE OF CALIFORNIA

THE STATE OF CALIFORNIA OR ITS OFFICERS OR AGENTS SHALL NOT BE RESPONSIBLE FOR THE ACCURACY OR COMPLETENESS OF SCANNED COPIES OF THIS PLAN SHEET.

RAMP QUANTITIES

DIRECTION	LOCATION		COLD PLANE AC PAVEMENT (0.08' Max)	HMA	RUBBERIZED HMA (TYPE O)	IMPORTED MATERIAL (SHOULDER BACKING)
			SQYD	TON	TON	TON
SB	FAIRWAY DRIVE	EXIT	766.8	213.2	50.0	11.9
		ENTRANCE	531.7	147.8	34.7	8.2
	SIMMERHORN Rd	EXIT	1,312.7	364.9	85.7	20.3
		ENTRANCE	976.6	271.5	63.7	15.1
	PRINGLE Ave	EXIT	842.5	234.2	55.0	12.9
		ENTRANCE	621.6	172.8	40.6	9.6
	WALNUT Ave	EXIT	743.1	206.6	48.5	11.4
		ENTRANCE	508.0	141.2	33.1	7.9
	TWIN CITIES ROAD	EXIT	978.2	271.9	63.8	15.1
		ENTRANCE	1,106.0	307.5	72.2	17.0
	WEST STOCKTON Blvd	EXIT	1,010.7	259.8	65.9	12.3
		ENTRANCE	661.3	163.6	43.2	8.1
	ARNO ROAD	EXIT	818.9	227.6	53.4	12.6
		ENTRANCE	752.6	209.2	49.1	11.6
	DILLARD ROAD	EXIT	804.7	223.7	52.5	12.4
		ENTRANCE	880.4	244.8	57.4	13.7
SB	ESCHINGER ROAD	EXIT	687.9	191.2	44.9	10.7
		ENTRANCE	642.2	178.5	41.9	10.0
NB	CRYSTAL WAY	EXIT	919.8	255.7	60.0	14.2
		ENTRANCE	574.3	159.7	37.5	8.9
	BOESSOW ROAD	EXIT	1,580.0	423.0	103.1	22.2
		ENTRANCE	1,542.3	424.5	100.6	19.1
	ELM Ave	EXIT	1,019.2	1,700.1	66.5	15.8
		ENTRANCE	895.7	199.1	58.4	7.2
	AYERS Ln	EXIT	1,082.6	274.5	70.6	13.1
		ENTRANCE	731.8	182.3	47.7	8.4
	WALNUT Ave	EXIT	852.0	236.9	55.6	13.1
		ENTRANCE	680.6	174.5	44.4	8.6
	TWIN CITIES ROAD	EXIT	1,049.2	291.7	68.5	16.1
		ENTRANCE	1,143.9	318.0	74.6	17.7
	MINGO ROAD	EXIT	1,120.8	265.0	73.1	24.5
		ENTRANCE	761.7	178.2	49.7	16.6
	ARNO ROAD	EXIT	1,025.3	259.7	66.9	12.4
		ENTRANCE	512.8	142.6	33.5	7.9
NB	DILLARD ROAD	EXIT	812.6	225.9	53.0	12.6
		ENTRANCE	609.0	169.3	39.7	9.5
		TOTAL	31,559.5	9,910.7	2,059.0	468.7

SEAL PAVEMENT JOINT

DIRECTION	POSTMILE		SEAL PAVEMENT JOINT		SEAL LONGITUDINAL ISOLATION JOINT
			LONGITUDINAL	TRANSVERSE	
	FROM	TO	LF	LF	LF
SB	1.38	1.82	2,323.2	5,851.0	2,323.2
	3.39	3.73	1,795.2	4,521.2	1,795.2
		SUBTOTAL	4,118.4	10,372.2	
		TOTAL	14,490.6		4,118.4

SHOULDER RUMBLE STRIP

DIRECTION	POSTMILE		LOCATION	SHOULDER RUMBLE STRIP	
				HMA, GROUND-IN INDENTATIONS	PCC, GROUND-IN INDENTATIONS
	FROM	TO		STA	STA
NB	0.14	9.35	R†	322	
			L†	446	
NB	10.71	12.00	R†	68	
			L†	68	
SB	0.14	9.36	R†		
			L†		41
SB	10.71	12.00	R†	68	
			L†	68	
		TOTAL		2180	41

TACK COAT

DIRECTION	POSTMILE/ LOACATION		TACK COAT
	FROM	TO	TON
SB	0.14	9.35	37.7
	10.71	12.0	5.5
NB	0.14	9.49	36.2
	10.84	12.0	1.5
SB	SB RAMPS		4.4
NB	NB RAMPS		6.1
		TOTAL	91.4

2 REVISED PER ADDENDUM No. 2 DATED OCTOBER 18, 2010

SUMMARY OF QUANTITIES

Q-2

STATE OF CALIFORNIA - DEPARTMENT OF TRANSPORTATION
NORTH REGION
OFFICE OF DESIGN, SOUTH
DESIGN BRANCH 2

FUNCTIONAL SUPERVISOR: GILBERT OGAZ
CALCULATED-DESIGNED BY: G. CAGLE
CHECKED BY: G. CAGLE
REVISED BY: G. CAGLE
DATE REVISED:

LAST REVISION 00-00-00
DATE PLOTTED => 18-OCT-2010
TIME PLOTTED => 11:09

Dist	COUNTY	ROUTE	POST MILES TOTAL PROJECT	SHEET No.	TOTAL SHEETS
03	Sac	99	0.1/12.0	38	73

REGISTERED CIVIL ENGINEER 5-24-10 DATE

5-24-10
PLANS APPROVAL DATE

REGISTERED PROFESSIONAL ENGINEER JUSTIN UNCK No. C65889 Exp. 12-31-11 CIVIL STATE OF CALIFORNIA

THE STATE OF CALIFORNIA OR ITS OFFICERS OR AGENTS SHALL NOT BE RESPONSIBLE FOR THE ACCURACY OR COMPLETENESS OF SCANNED COPIES OF THIS PLAN SHEET.

TEMPORARY RAILING AND CRASH CUSHIONS

DIRECTION	LOCATION	APPROXIMATE PM	LOCATION DESCRIPTION	TEMPORARY RAILING (TYPE K)	TEMPORARY TRAFFIC SCREEN	TEMPORARY CRASH CUSHION MODULE	TERMPORARY CRASH CUSHION (TYPE ABSORB 350)	TRAFFIC PLASTIC DRUM	CHANNELIZER (SURFACE MOUNTED)	NOTES
NB/SB	(MEDIAN/OUTSIDE)			LF	LF	EA	EA	EA	EA	
SB	OUTSIDE	0.150	NORTH CHANNEL DRY Cr APPROACH	140	140				10	EXTEND RAILING PAST 15' FROM ETW
	RAMP	0.676	SB ONRAMP C St OVERCROSSING	120	120				10	EXTEND RAILING PAST 15' FROM ETW
	OUTSIDE	0.808	C St OVERCROSSING APPROACH (24-140)	140	140				10	EXTEND RAILING PAST 15' FROM ETW
	OUTSIDE	1.581	SIMMERHORN Rd OVERCROSSING APPROACH (24-138)	80	80	14			10	"ARRAY TS14"
	OUTSIDE	1.639	AMADOR Ave OVERCROSSING APPROACH (24-139)	80	80	14			10	"ARRAY TS14"
	OUTSIDE	3.547	Rte 104/99 Sep APPROACH (24-144) (TWIN CITIES Rd)	80	80	14			10	"ARRAY TS14"
	OUTSIDE	4.948	SOUTH LAGOON Cr APPROACH (24-28)	140	140				10	EXTEND RAILING PAST 15' FROM ETW
	OUTSIDE	5.028	LAGOON Cr APPROACH(24-25)	140	140				10	EXTEND RAILING PAST 15' FROM ETW
	OUTSIDE	5.088	NORTH LAGOON Cr APPROACH (24-27)	140	140				10	EXTEND RAILING PAST 15' FROM ETW
	OUTSIDE	6.021	ARNO Rd OVERCROSSING APPROACH (24-151)	140	140				10	EXTEND RAILING PAST 15' FROM ETW
	OUTSIDE	6.565	VALENSIN UNDERCROSSING APPROACH (24-46)	140	140				10	EXTEND RAILING PAST 15' FROM ETW
	OUTSIDE	7.012	BADGER Cr BRIDGE APPROACH	80	80	14			10	"ARRAY TS14"
	OUTSIDE	7.372	DILLARD Rd OVERCROSSING APPROACH	140	140				10	EXTEND RAILING PAST 15' FROM ETW
	OUTSIDE	7.478	COSUMNES RIVER OVERFLOW APPROACH (24-22)	80	80	14			10	"ARRAY TS14"
	OUTSIDE	8.047	COSUMNES RIVER OVERFLOW APPROACH (24-21)	100	100	14			10	"ARRAY TS14"
	MEDIAN	8.050	COSUMNES RIVER OVERFLOW APPROACH (24-21)	120	120				10	PLACE RAILING END BEHIND EXISTING THRIE BEAM
	OUTSIDE	8.527	COSUMNES RIVER APPROACH (24-20)	80	80	14			10	"ARRAY TS14"
	OUTSIDE	8.749	MCCONNELL UNDERPASS APPROACH (24-48L)	80	80		1		10	ELEVEN ELEMENT SYSTEM
SB	MEDIAN	8.766	MCCONNELL UNDERPASS APPROACH (24-48L)	80	80		1		10	ELEVEN ELEMENT SYSTEM
NB	OUTSIDE	0.150	NORTH CHANNEL DRY Cr APPROACH	80	80	14			10	"ARRAY TS14"
	OUTSIDE	0.825	C St OVERCROSSING APPROACH (24-140)	140	140				10	EXTEND RAILING PAST 15' FROM ETW
	OUTSIDE	1.595	SIMMERHORN Rd OVERCROSSING APPROACH (24-138)	80	80	14			10	"ARRAY TS14"
	OUTSIDE	1.642	GALT UNDERPASS APPROACH (24-60)	80	80	14			10	"ARRAY TS14"
	OUTSIDE	3.552	Rte 104/99 Sep APPROACH (24-144) (TWIN CITIES Rd)	80	80	14			10	"ARRAY TS14"
	OUTSIDE	4.940	SOUTH LAGOON Cr APPROACH (24-28)	80	80	14			10	"ARRAY TS14"
	OUTSIDE	5.002	LAGOON Cr APPROACH (24-25)	200	200				10	CLOSE GAP BETWEEN BRIDGES
	OUTSIDE	5.081	NORTH LAGOON Cr APPROACH (24-27)	180	180				10	CLOSE GAP BETWEEN BRIDGES
	OUTSIDE	5.640	SAMSON SLOUGH APPROACH	300	300	14			10	"ARRAY TS14"
	OUTSIDE	6.040	ARNO Rd OVERCROSSING APPROACH (24-151)	140	140				10	EXTEND RAILING PAST 15' FROM ETW
	OUTSIDE	6.570	VALENSIN UNDERCROSSING APPROACH (24-46)	80	80	14			10	"ARRAY TS14"
	OUTSIDE	6.990	BADGER Cr BRIDGE APPROACH	80	80	14			10	"ARRAY TS14"
	OUTSIDE	7.395	DILLARD Rd OVERCROSSING APPROACH	140	140				10	EXTEND RAILING PAST 15' FROM ETW
	OUTSIDE	7.960	COSUMNES RIVER OVERFLOW APPROACH (24-21)	80	80	14			10	"ARRAY TS14"
	OUTSIDE	8.435	COSUMNES RIVER APPROACH (24-20)	80	80	14			10	"ARRAY TS14"
	OUTSIDE	8.840	MCCONNELL OVERHEAD APPROACH (24-73)	100	100	14			10	"ARRAY TS14"
NB	MEDIAN	8.840	MCCONNELL OVERHEAD APPROACH (24-73)	100	100		1		10	ELEVEN ELEMENT SYSTEM
SB	STAGE 1	1.380/1.820	ELM Ave ENTRANCE TO PRINGLE Ave ENTRANCE	3,640						PCC LANE RECONSTRUCTION
	STAGE 2	1.380/1.820	ELM Ave ENTRANCE TO PRINGLE Ave ENTRANCE	2,560	2,560	14		10		"ARRAY TS14". PCC LANE RECONSTRUCTION
	STAGE 3	1.380/1.820	ELM Ave ENTRANCE TO PRINGLE Ave ENTRANCE	2,560	2,560	14		28		"ARRAY TS14". PCC LANE RECONSTRUCTION
	STAGE 1	3.390/3.730	AT Rte 104/99 SEPARATION	3,120						PCC LANE RECONSTRUCTION
	STAGE 2	3.390/3.730	AT Rte 104/99 SEPARATION	2,040	2,040	14		10		"ARRAY TS14". PCC LANE RECONSTRUCTION
SB	STAGE 3	3.390/3.730	AT Rte 104/99 SEPARATION	2,040	2,040	14		28		"ARRAY TS14". PCC LANE RECONSTRUCTION
			TOTAL	20,080	13,320	308	3	76	360	

2 REVISED PER ADDENDUM No. 2 DATED OCTOBER 18, 2010

SUMMARY OF QUANTITIES

Q-8

STATE OF CALIFORNIA - DEPARTMENT OF TRANSPORTATION
NORTH REGION
OFFICE OF DESIGN, SOUTH
DESIGN BRANCH 2

FUNCTIONAL SUPERVISOR: GIBERT OGAZ

CALCULATED-DESIGNED BY: JUSTIN A UNCK
CHECKED BY: JUSTIN A UNCK

REVISED BY: J. UNCK
DATE REVISED:

LAST REVISION 00-00-00
DATE PLOTTED => 18-OCT-2010
TIME PLOTTED => 11:09

Dist	COUNTY	ROUTE	POST MILES TOTAL PROJECT	SHEET No.	TOTAL SHEETS
03	SAC	99	0.12/12.0	46	73

REGISTERED CIVIL ENGINEER DATE 5-13-10

5-24-10
PLANS APPROVAL DATE

REGISTERED PROFESSIONAL ENGINEER NORMAN YE No. E-16913 Exp. 6/30/11 ELECTRICAL STATE OF CALIFORNIA

THE STATE OF CALIFORNIA OR ITS OFFICERS OR AGENTS SHALL NOT BE RESPONSIBLE FOR THE ACCURACY OR COMPLETENESS OF SCANNED COPIES OF THIS PLAN SHEET.

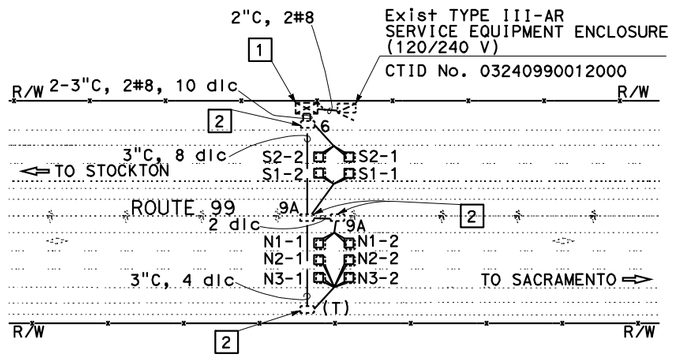

TRAFFIC MONITORING STATION
(Sac 99, PM 12.00)
(LOCATION 5)

DETAIL "E"

NO SCALE

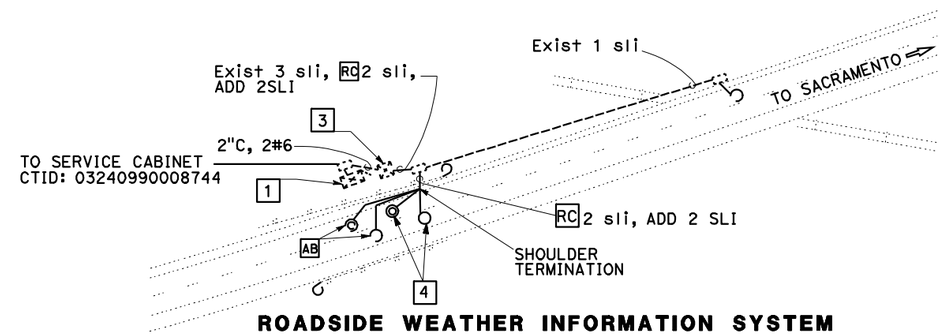

ROADSIDE WEATHER INFORMATION SYSTEM
MC CONNELL OH
(Sac 99, PM 8.8)
(LOCATION 3)

DETAIL "C"

NO SCALE

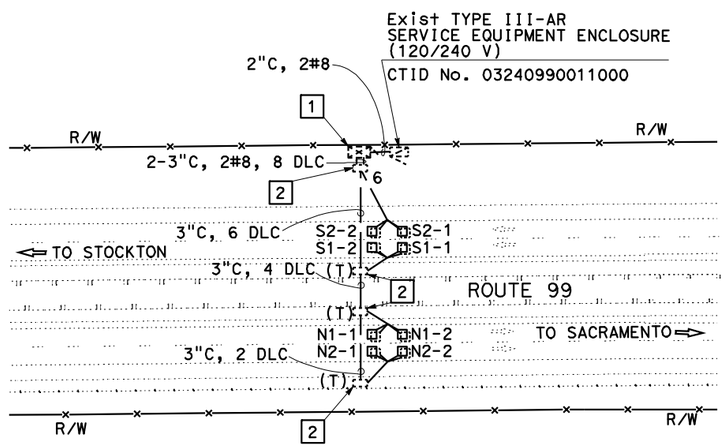

TRAFFIC MONITORING STATION
(Sac 99, PM 11.00)
(LOCATION 4)

DETAIL "D"

NO SCALE

REVISED PER ADDENDUM No. 3 DATED OCTOBER 18, 2010

MODIFY TRAFFIC MONITORING STATION
MODIFY ROADSIDE WEATHER INFORMATION SYSTEM

(LOCATION 3,4,5)

NO SCALE

E-3

STATE OF CALIFORNIA - DEPARTMENT OF TRANSPORTATION
ELECTRICAL DESIGN
FUNCTIONAL SUPERVISOR: NELSON LEE
CALCULATED-DESIGNED BY: JAMIE KOJAK
CHECKED BY: NORMAN YE
REVISED BY
DATE REVISED

LAST REVISION 00-00-00
DATE PLOTTED => 18-OCT-2010
TIME PLOTTED => 11:09