Dist	COUNTY	ROUTE	POST MILES TOTAL PROJECT	SHEET No.	TOTAL SHEETS
03	But	99	40.5/40.8	1	76

ACHSNH-P099(582)E

STATE OF CALIFORNIA
DEPARTMENT OF TRANSPORTATION

PROJECT PLANS FOR CONSTRUCTION ON
STATE HIGHWAY

IN BUTTE COUNTY
NEAR CHICO
FROM 0.2 MILE SOUTH TO 0.1 MILE
NORTH OF ROCK CREEK BRIDGE

TO BE SUPPLEMENTED BY STANDARD PLANS DATED 2010

INDEX OF PLANS

SHEET No.	DESCRIPTION
1	TITLE AND LOCATION MAP
2-3	TYPICAL CROSS SECTIONS
4-5	LAYOUTS
6-7	PROFILES AND SUPERELEVATION DIAGRAMS
8-16	CONSTRUCTION DETAILS
17-21	DRAINAGE PLAN AND PROFILE
22	DRAINAGE QUANTITIES
23	UTILITY PLANS
24	CONSTRUCTION AREA SIGNS
25-26	STAGE CONSTRUCTION PLANS
27-28	PAVEMENT DELINEATION AND SIGN PLANS
29	PAVEMENT DELINEATION DETAILS AND QUANTITIES
30-31	SIGN DETAILS AND QUANTITIES
32-33	SUMMARY OF QUANTITIES
34-35	EROSION CONTROL PLAN
36	EROSION CONTROL LEGEND AND QUANTITIES
37-62	REVISED STANDARD PLANS

STRUCTURE PLANS

63-76 ROCK CREEK BRIDGE Br No. 12-0027

THE STANDARD PLANS LIST APPLICABLE TO THIS CONTRACT IS INCLUDED IN THE NOTICE TO BIDDERS AND SPECIAL PROVISIONS BOOK.

LOCATION MAP

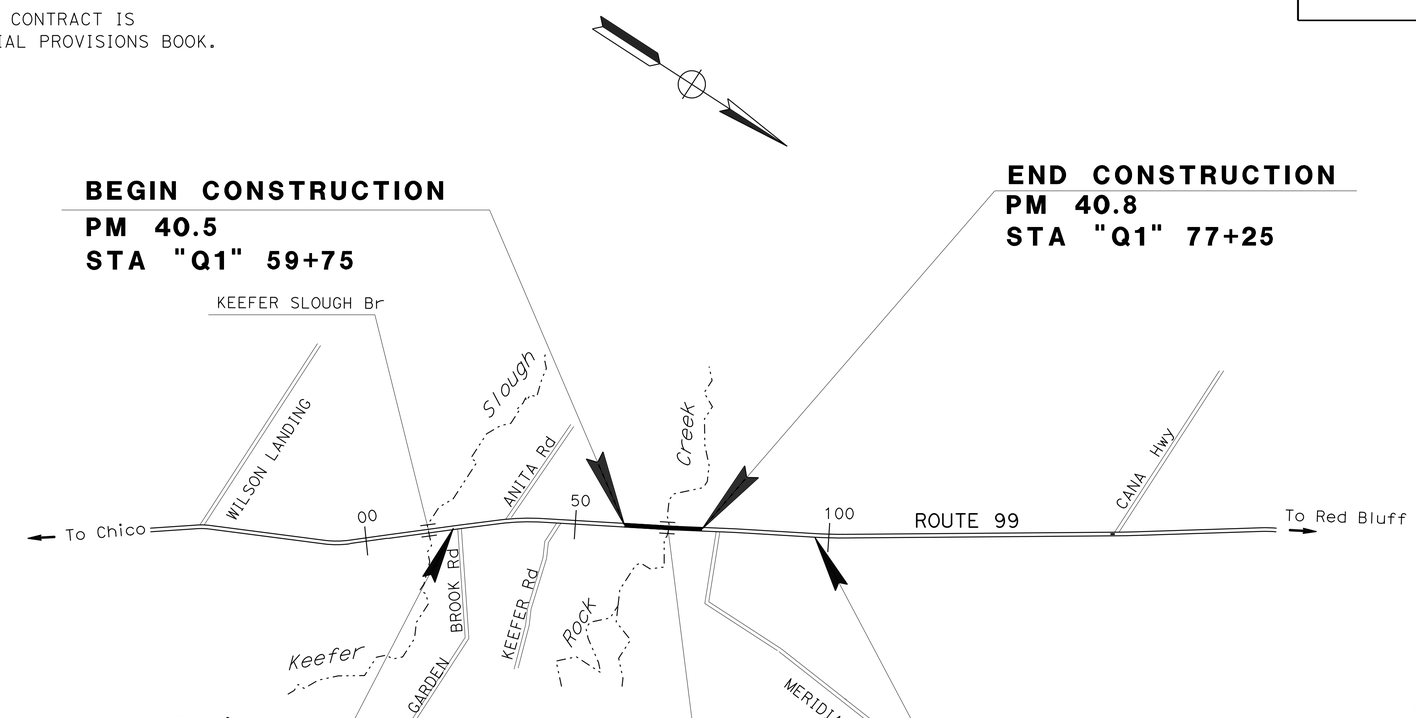

NO SCALE

PROJECT MANAGER RODNEY MURPHY

DESIGN ENGINEER STEPHEN WRIGHT

THE CONTRACTOR SHALL POSSESS THE CLASS (OR CLASSES) OF LICENSE AS SPECIFIED IN THE "NOTICE TO BIDDERS."

10-13-14
PROJECT ENGINEER DATE
REGISTERED CIVIL ENGINEER

October 13, 2014
PLANS APPROVAL DATE

REGISTERED PROFESSIONAL ENGINEER
ERIC NORMAN SOUZA
No. 75706
Exp. 06-30-16
CIVIL
STATE OF CALIFORNIA

THE STATE OF CALIFORNIA OR ITS OFFICERS OR AGENTS SHALL NOT BE RESPONSIBLE FOR THE ACCURACY OR COMPLETENESS OF SCANNED COPIES OF THIS PLAN SHEET.

DATE PLOTTED => 17-NOV-2014
TIME PLOTTED => 11:01

CONTRACT No.	03-1F4204
PROJECT ID	03000011194

LAST REVISION 06-30-14

Dist	COUNTY	ROUTE	POST MILES TOTAL PROJECT	SHEET No.	TOTAL SHEETS
03	But	99	40.5/40.8	2	76

REGISTERED CIVIL ENGINEER 10-13-14 DATE

10-13-14
PLANS APPROVAL DATE

REGISTERED PROFESSIONAL ENGINEER
ERIC NORMAN SOUZA
No. 75706
Exp. 06-30-16
CIVIL
STATE OF CALIFORNIA

THE STATE OF CALIFORNIA OR ITS OFFICERS OR AGENTS SHALL NOT BE RESPONSIBLE FOR THE ACCURACY OR COMPLETENESS OF SCANNED COPIES OF THIS PLAN SHEET.

NOTES:

1. SHOULDER AND CENTERLINE RUMBLE STRIPS WILL BE USED BUT ARE NOT SHOWN. SEE SHEETS L-1, L-2 AND C-6 FOR DETAILS.
2. FOR BRIDGE DETAILS, SEE STRUCTURE PLANS.
3. DIMENSIONS OF THE PAVEMENT STRUCTURES (STRUCTURAL SECTIONS) ARE SUBJECT TO TOLERENCES SPECIFIED IN THE STANDARD SPECIFICATIONS.
4. SUPERELEVATIONS ARE SHOWN ON THE SUPERELEVATION DIAGRAMS.
5. CRACK TREATMENT LOCATIONS TO BE DETERMINED BY THE ENGINEER.

ABBREVIATIONS

SUPER - SUPERELEVATION

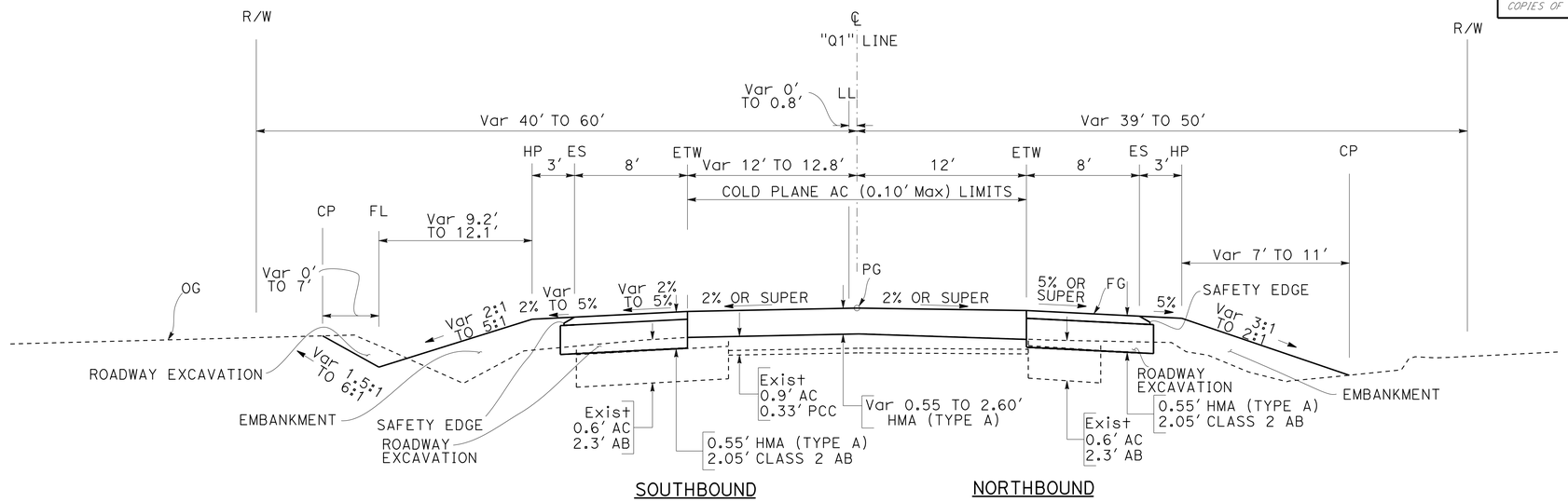

SOUTHBOUND NORTHBOUND

"Q1" 63+25 TO "Q1" 68+75

PAVEMENT CLIMATE REGION

INLAND VALLEY

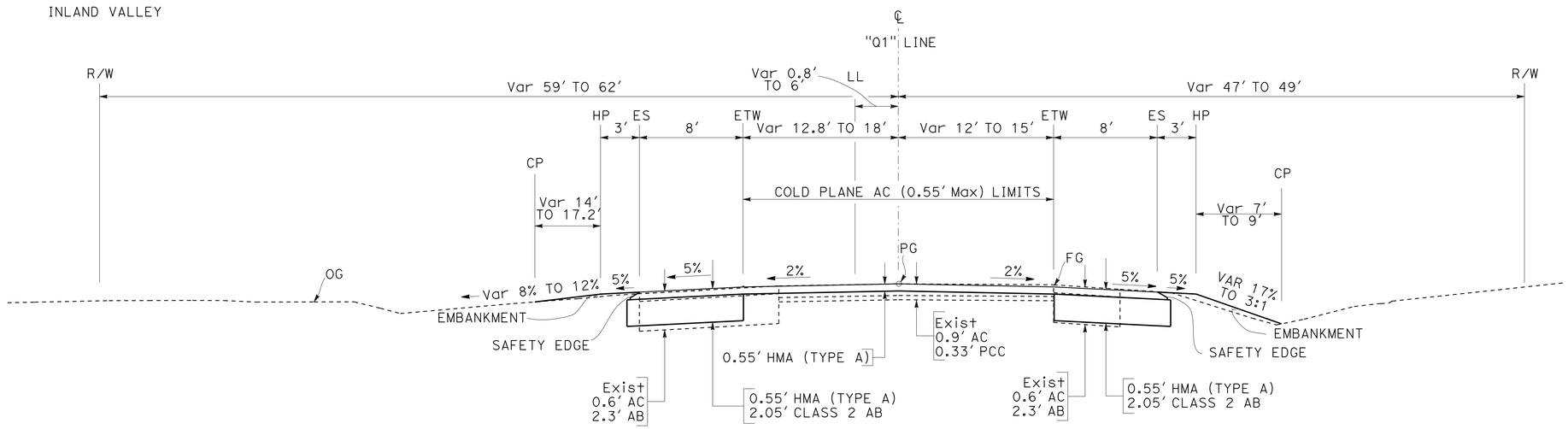

SOUTHBOUND NORTHBOUND

"Q1" 60+00 TO "Q1" 63+25
"Q1" 68+75 TO "Q1" 69+42
"Q1" 71+12 to "Q1" 71+75
"Q1" 75+50 to "Q1" 77+00

ROUTE 99

TYPICAL CROSS SECTIONS

NO SCALE

X-1

STATE OF CALIFORNIA - DEPARTMENT OF TRANSPORTATION
Caltrans
TRAFFIC

FUNCTIONAL SUPERVISOR: STEPHEN WRIGHT
CALCULATED-DESIGNED BY: ERIC SOUZA
CHECKED BY: CAROL MESMAN
REVISED BY
DATE REVISED

LAST REVISION 06-30-14
DATE PLOTTED => 14-NOV-2014
TIME PLOTTED => 14:57

Dist	COUNTY	ROUTE	POST MILES TOTAL PROJECT	SHEET No.	TOTAL SHEETS
03	But	99	40.5/40.8	3	76

REGISTERED CIVIL ENGINEER 10-13-14 DATE

10-13-14
PLANS APPROVAL DATE

REGISTERED PROFESSIONAL ENGINEER
ERIC NORMAN SOUZA
No. 75706
Exp. 06-30-16
CIVIL
STATE OF CALIFORNIA

THE STATE OF CALIFORNIA OR ITS OFFICERS OR AGENTS SHALL NOT BE RESPONSIBLE FOR THE ACCURACY OR COMPLETENESS OF SCANNED COPIES OF THIS PLAN SHEET.

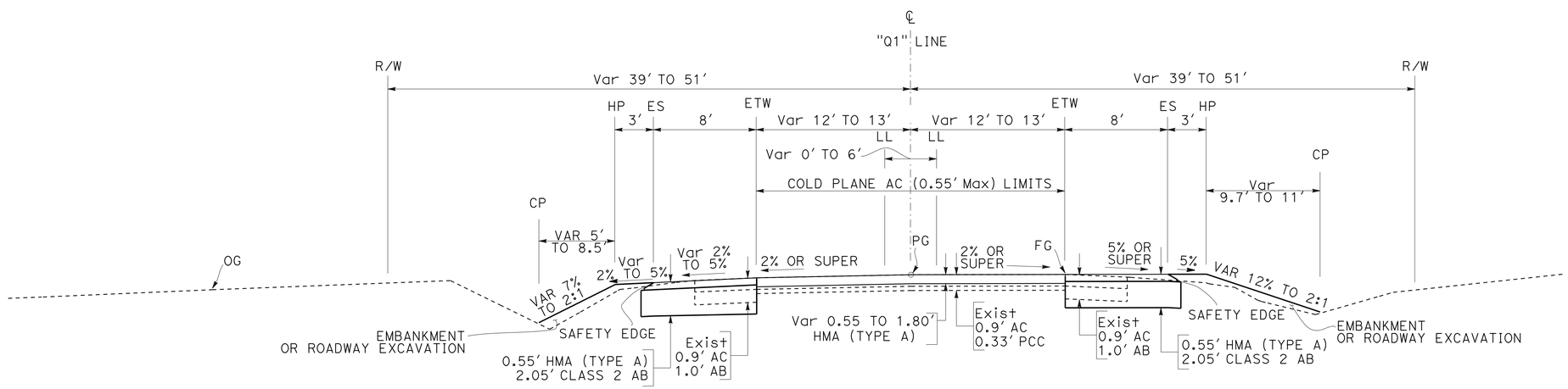

"Q1" 71+75 to "Q1" 75+50

ROUTE 99

TYPICAL CROSS SECTIONS

NO SCALE

X-2

STATE OF CALIFORNIA - DEPARTMENT OF TRANSPORTATION
Caltrans®
TRAFFIC

FUNCTIONAL SUPERVISOR: STEPHEN WRIGHT
CALCULATED-DESIGNED BY: ERIC SOUZA
CHECKED BY: CAROL MESMAN
REVISED BY
DATE REVISED

LAST REVISION 06-30-14
DATE PLOTTED => 14-NOV-2014
TIME PLOTTED => 14:57

Dist	COUNTY	ROUTE	POST MILES TOTAL PROJECT	SHEET No.	TOTAL SHEETS
03	But	99	40.5/40.8	4	76

REGISTERED CIVIL ENGINEER 10-13-14 DATE

10-13-14
PLANS APPROVAL DATE

REGISTERED PROFESSIONAL ENGINEER
ERIC NORMAN SOUZA
No. 75706
Exp. 06-30-16
CIVIL
STATE OF CALIFORNIA

THE STATE OF CALIFORNIA OR ITS OFFICERS OR AGENTS SHALL NOT BE RESPONSIBLE FOR THE ACCURACY OR COMPLETENESS OF SCANNED COPIES OF THIS PLAN SHEET.

NOTE:

1. FOR ACCURATE RIGHT OF WAY DATA, CONTACT RIGHT OF WAY ENGINEERING AT THE DISTRICT OFFICE.
2. FOR ALL UTILITY INFORMATION SEE UTILITY PLAN.

LEGEND

LIMITS OF 0.55 HMA (TYPE A) AND COLD PLANE AC PAVEMENT (0.55' Max)

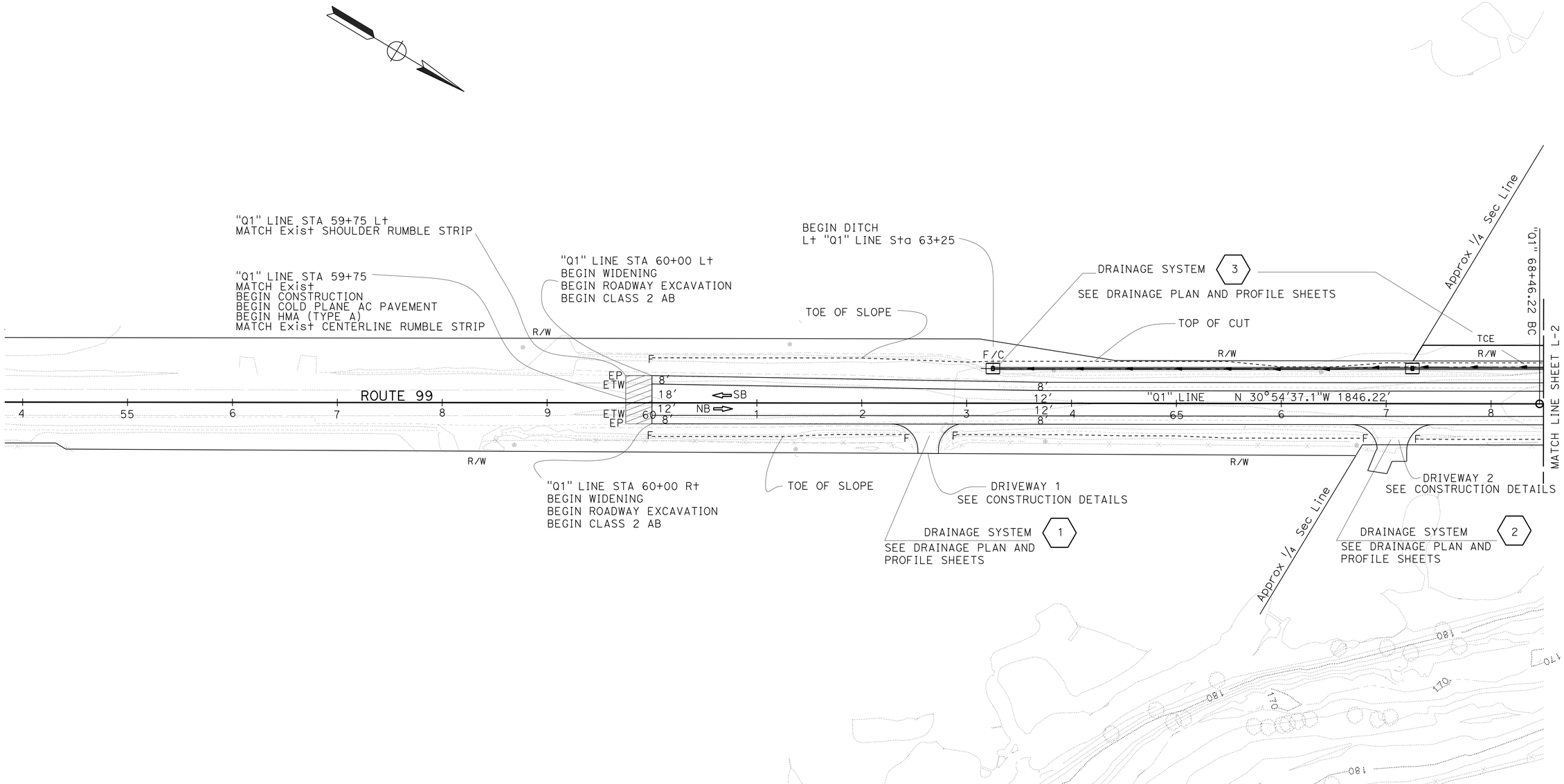

LAYOUT

SCALE: 1"=50'

L-1

STATE OF CALIFORNIA - DEPARTMENT OF TRANSPORTATION
Caltrans
TRAFFIC

FUNCTIONAL SUPERVISOR: STEPHEN WRIGHT
CALCULATED-DESIGNED BY: A.G. CHIN
CHECKED BY: CAROL MESMAN
REVISED BY
DATE REVISED

LAST REVISION 06-30-14
DATE PLOTTED => 14-NOV-2014
TIME PLOTTED => 14:45

Dist	COUNTY	ROUTE	POST MILES TOTAL PROJECT	SHEET No.	TOTAL SHEETS
03	But	99	40.5/40.8	5	76

REGISTERED CIVIL ENGINEER 10-13-14 DATE

10-13-14
PLANS APPROVAL DATE

REGISTERED PROFESSIONAL ENGINEER
ERIC NORMAN SOUZA
No. 75706
Exp. 06-30-16
CIVIL
STATE OF CALIFORNIA

THE STATE OF CALIFORNIA OR ITS OFFICERS OR AGENTS SHALL NOT BE RESPONSIBLE FOR THE ACCURACY OR COMPLETENESS OF SCANNED COPIES OF THIS PLAN SHEET.

NOTE:

1. FOR ACCURATE RIGHT OF WAY DATA, CONTACT RIGHT OF WAY ENGINEERING AT THE DISTRICT OFFICE.
2. SEE CONSTRUCTION DETAILS FOR MGS DETAILS.
3. SEE C-6 FOR CONFORM AND DRIVEWAY SHOULDER RUMBLE STRIP DETAILS.
4. FOR HMA OVERSIDE DRAIN LOCATIONS SEE CONSTRUCTION DETAILS SHEETS.

LEGEND

LIMITS OF 0.55 HMA (TYPE A) AND COLD PLANE AC PAVEMENT (0.55′ Max)

LIMITS OF 0.25 HMA (TYPE A) AND COLD PLANE AC PAVEMENT (0.25′ Max)

CURVE DATA

No. ⊕	R	Δ	T	L
1	25,000′	01°17′00"	279.99′	559.96′

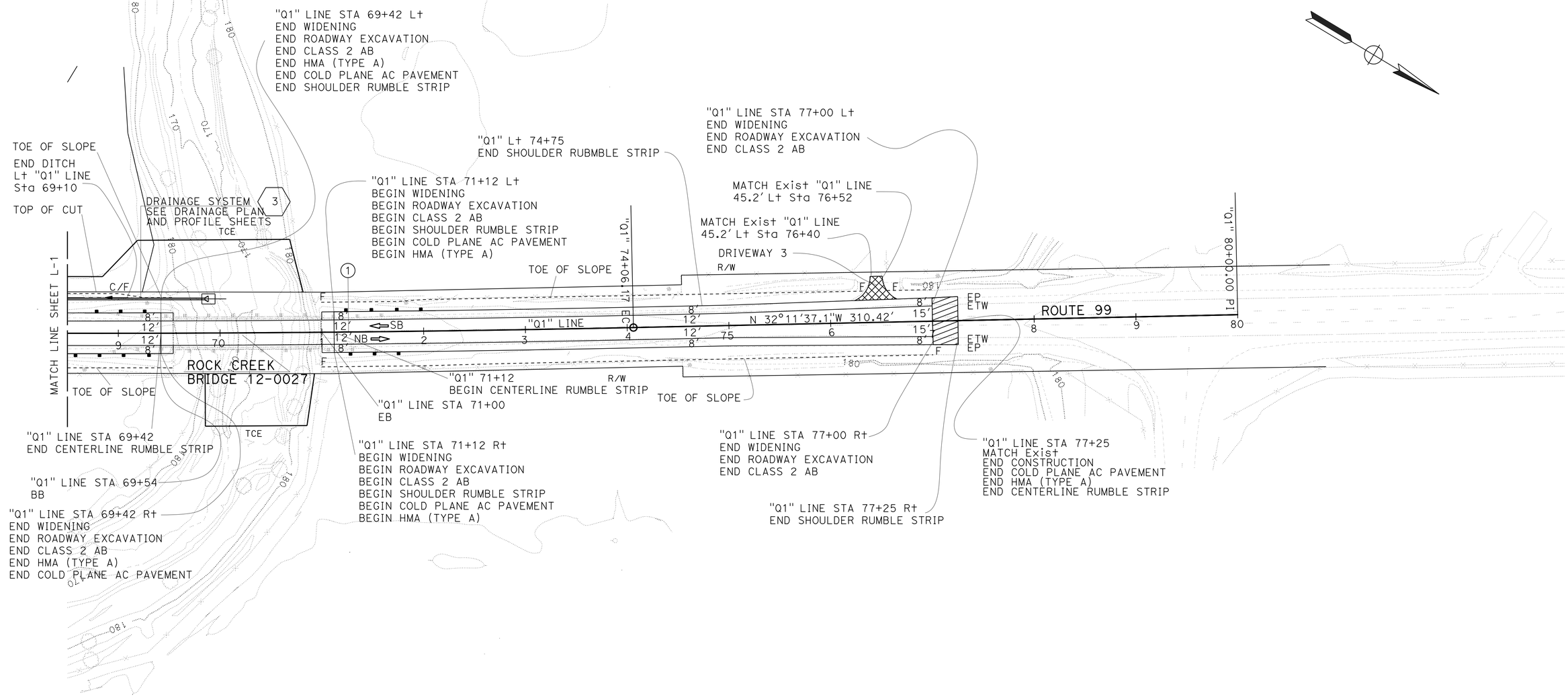

LAYOUT

SCALE: 1"=50′

L-2

REVISED BY	DATE REVISED
A.G. CHIN	CAROL MESMAN

CALCULATED-DESIGNED BY	CHECKED BY

FUNCTIONAL SUPERVISOR: STEPHEN T. WRIGHT

STATE OF CALIFORNIA - DEPARTMENT OF TRANSPORTATION

Caltrans

TRAFFIC

LAST REVISION 06-30-14 | DATE PLOTTED => 14-NOV-2014 | TIME PLOTTED => 14:45

Dist	COUNTY	ROUTE	POST MILES TOTAL PROJECT	SHEET No.	TOTAL SHEETS
03	But	99	40.5/40.8	6	76

REGISTERED CIVIL ENGINEER 10-13-14 DATE

10-13-14
PLANS APPROVAL DATE

REGISTERED PROFESSIONAL ENGINEER
ERIC NORMAN SOUZA
No. 75706
Exp. 06-30-16
CIVIL
STATE OF CALIFORNIA

THE STATE OF CALIFORNIA OR ITS OFFICERS OR AGENTS SHALL NOT BE RESPONSIBLE FOR THE ACCURACY OR COMPLETENESS OF SCANNED COPIES OF THIS PLAN SHEET.

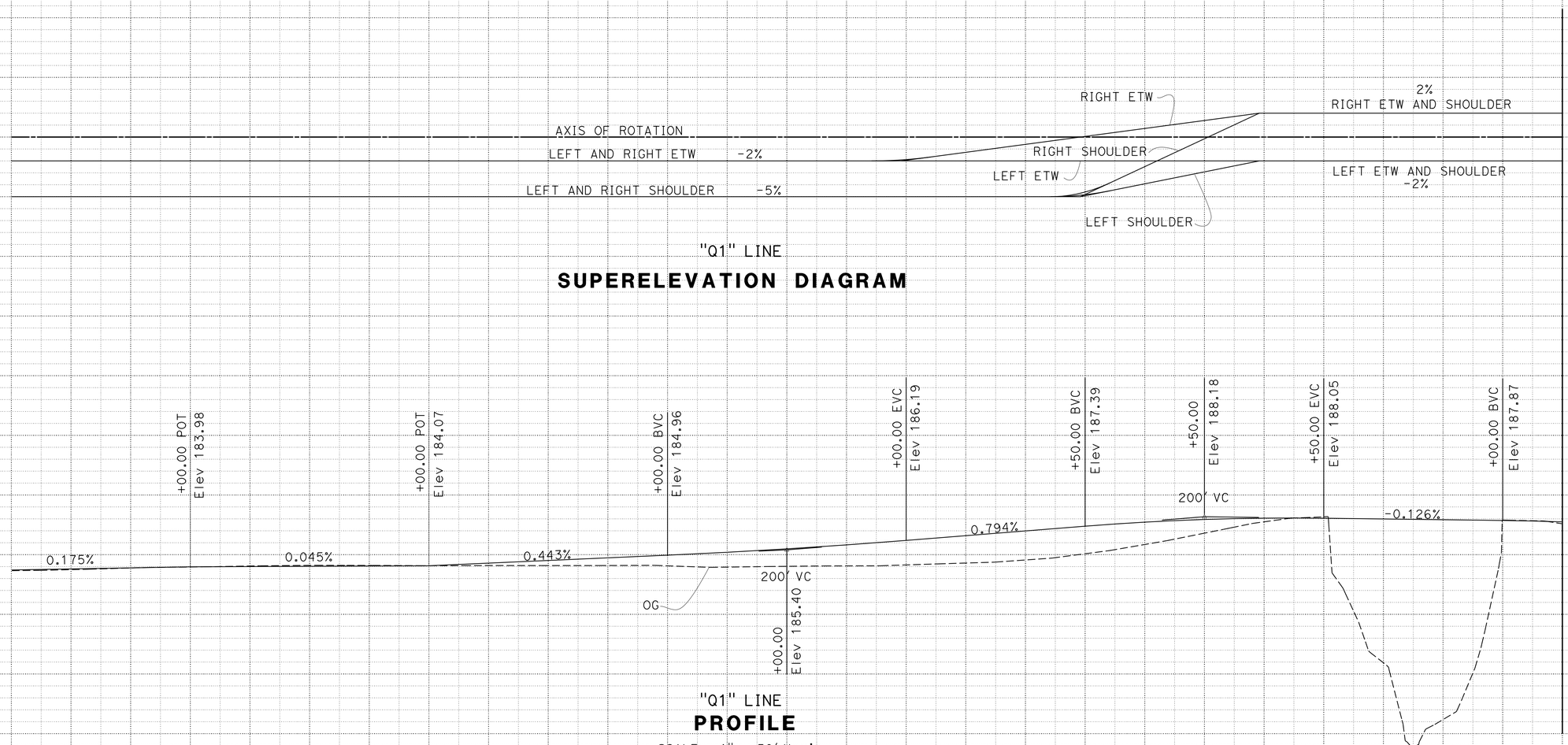

STATION		59+00	60+00	61+00	62+00	63+00	64+00	65+00	66+00	67+00	68+00	69+00	70+00	71+00	TOTAL
CY	Exc							1,517							
	Emb							1,053							

STATE OF CALIFORNIA - DEPARTMENT OF TRANSPORTATION
Caltrans
TRAFFIC

FUNCTIONAL SUPERVISOR: STEPHEN WRIGHT
CALCULATED-DESIGNED BY: A.G. CHIN
CHECKED BY: CAROL MESMAN
REVISED BY
DATE REVISED

LAST REVISION 06-30-14
DATE PLOTTED => 14-NOV-2014
TIME PLOTTED => 14:45

Dist	COUNTY	ROUTE	POST MILES TOTAL PROJECT	SHEET No.	TOTAL SHEETS
03	But	99	40.5/40.8	7	76

REGISTERED CIVIL ENGINEER 10-13-14 DATE

10-13-14
PLANS APPROVAL DATE

REGISTERED PROFESSIONAL ENGINEER
ERIC NORMAN SOUZA
No. 75706
Exp. 06-30-16
CIVIL
STATE OF CALIFORNIA

THE STATE OF CALIFORNIA OR ITS OFFICERS OR AGENTS SHALL NOT BE RESPONSIBLE FOR THE ACCURACY OR COMPLETENESS OF SCANNED COPIES OF THIS PLAN SHEET.

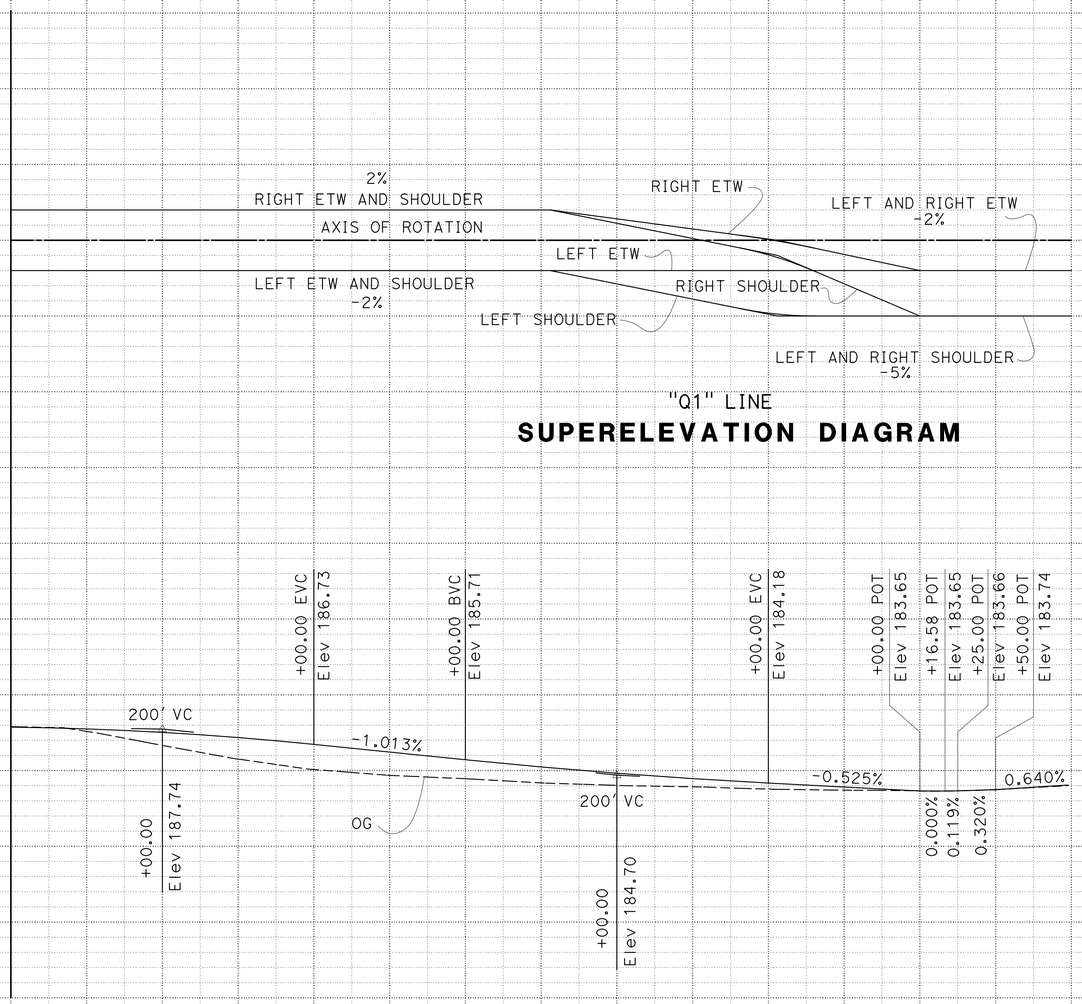

"Q1" LINE
SUPERELEVATION DIAGRAM

"Q1" LINE
PROFILE
SCALE : 1"=50' Horiz
1"=5' Vert

STATION	71+00	72+00	73+00	74+00	75+00	76+00	77+00	78+00	TOTAL
CY Exc						658			
CY Emb						475			

PROFILE AND SUPERELEVATION

PS-2

STATE OF CALIFORNIA - DEPARTMENT OF TRANSPORTATION
Caltrans
TRAFFIC

FUNCTIONAL SUPERVISOR: STEPHEN WRIGHT
CALCULATED-DESIGNED BY: A.G. CHIN
CHECKED BY: CAROL MESMAN
REVISED BY
DATE REVISED

LAST REVISION OG-30-14
DATE PLOTTED => 14-NOV-2014
TIME PLOTTED => 14:45

Dist	COUNTY	ROUTE	POST MILES TOTAL PROJECT	SHEET No.	TOTAL SHEETS
03	But	99	40.5/40.8	8	76

REGISTERED CIVIL ENGINEER 10-13-14 DATE

10-13-14
PLANS APPROVAL DATE

REGISTERED PROFESSIONAL ENGINEER
ERIC NORMAN SOUZA
No. 75706
Exp. 06-30-16
CIVIL
STATE OF CALIFORNIA

THE STATE OF CALIFORNIA OR ITS OFFICERS OR AGENTS SHALL NOT BE RESPONSIBLE FOR THE ACCURACY OR COMPLETENESS OF SCANNED COPIES OF THIS PLAN SHEET.

NOTE:

1. FOR ACCURATE RIGHT OF WAY DATA, CONTACT RIGHT OF WAY ENGINEERING AT THE DISTRICT OFFICE.
2. FOR ALL UTILITY INFORMATION SEE UTILITY PLAN.
3. FOR TRANSITION DETAIL FOR TERMINAL END TREATMENT SEE CONSTRUCTION DETAILS.

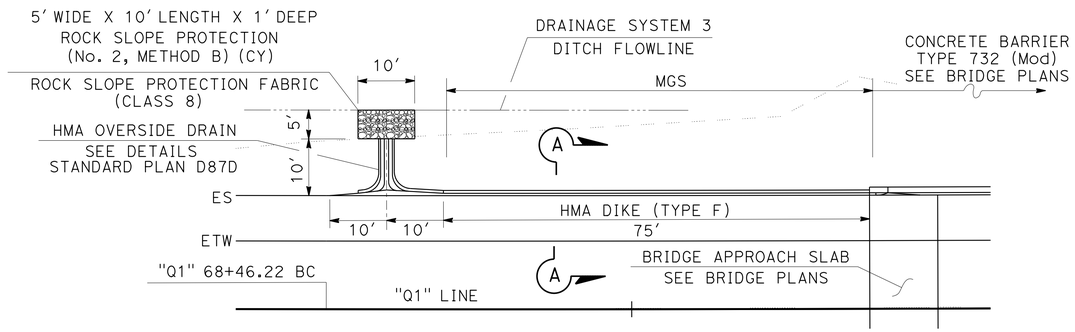

DETAIL "A"

NO SCALE

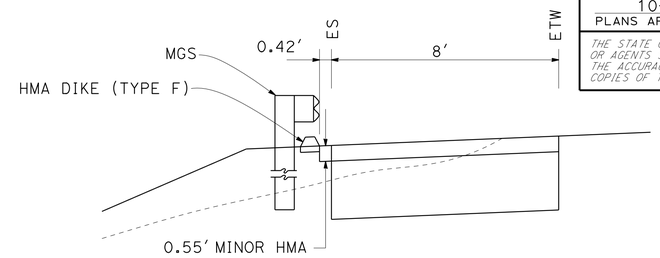

SECTION A-A

NO SCALE

ABBREVIATION

AILTS - ALTERNATIVE INLINE TERMINAL SYSTEM
GR - GUARD RAILING

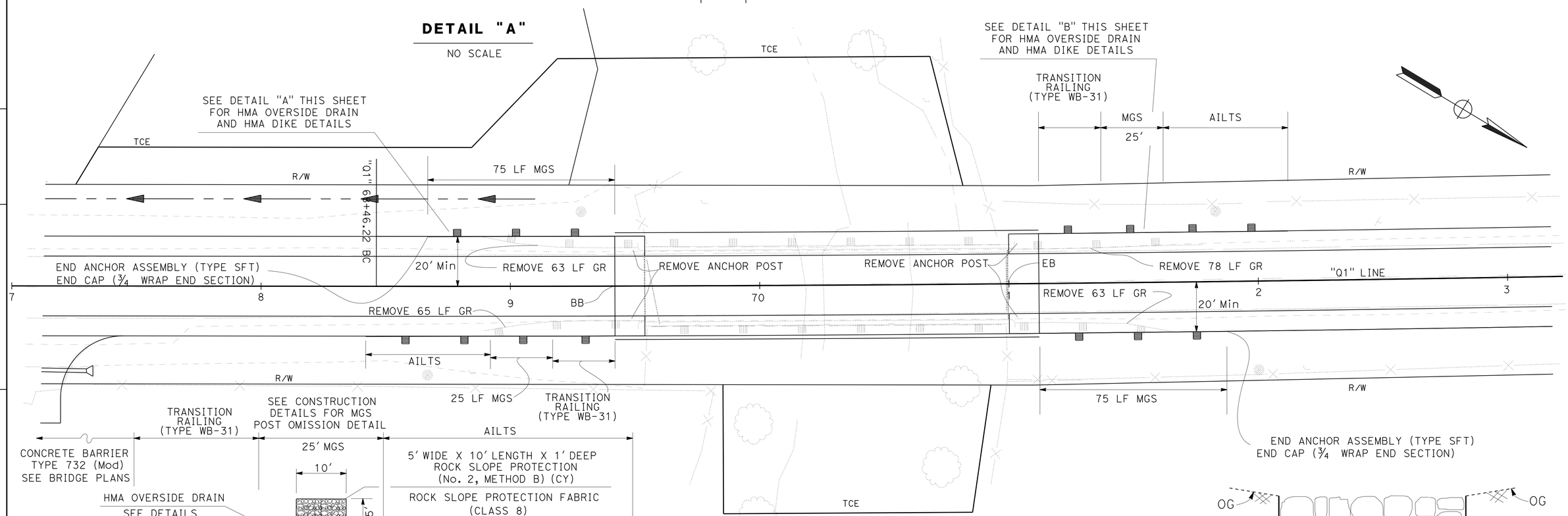

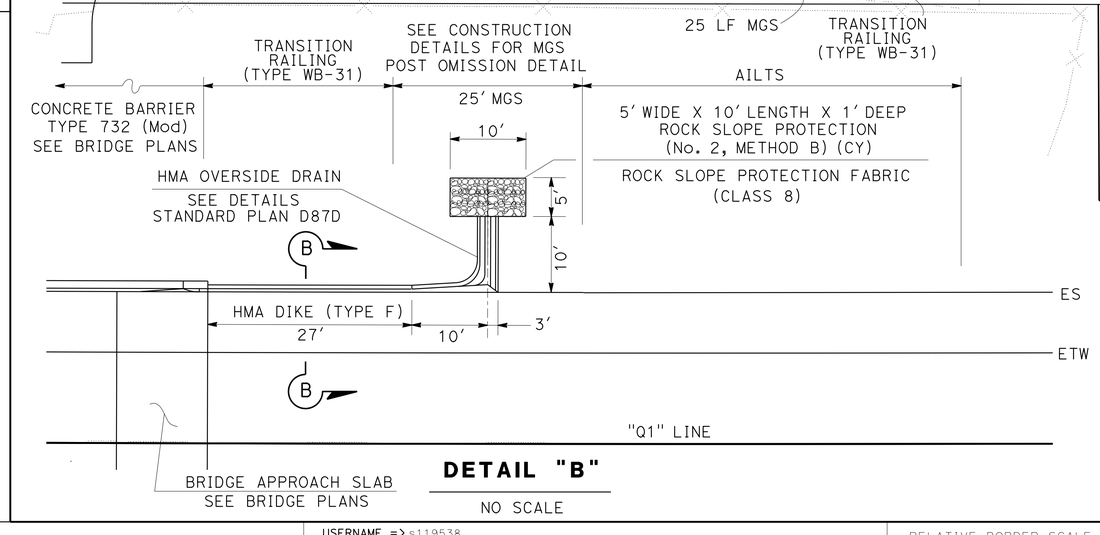

DETAIL "B"

NO SCALE

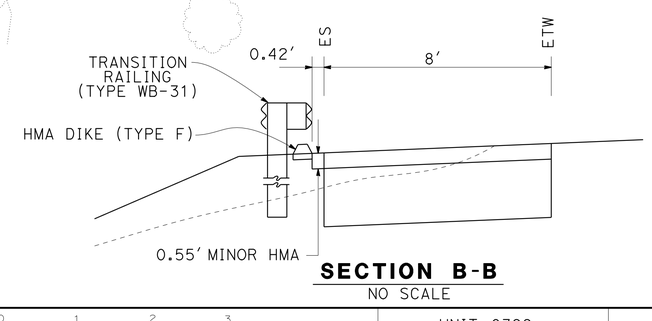

SECTION B-B

NO SCALE

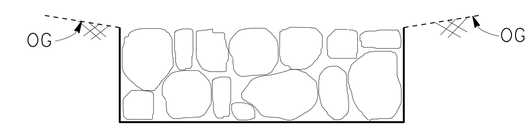

ROCK SLOPE PROTECTION FABRIC LIMITS DETAIL

MGS CONSTRUCTION DETAILS

SCALE: 1"=20'

C-1

STATE OF CALIFORNIA - DEPARTMENT OF TRANSPORTATION
TRAFFIC

FUNCTIONAL SUPERVISOR: STEPHEN WRIGHT
CALCULATED-DESIGNED BY: A.G. CHIN
CHECKED BY: CAROL MESMAN
REVISED BY
DATE REVISED

LAST REVISION OG-30-14
DATE PLOTTED => 14-NOV-2014
TIME PLOTTED => 14:45

Dist	COUNTY	ROUTE	POST MILES TOTAL PROJECT	SHEET No.	TOTAL SHEETS
03	But	99	40.5/40.8	9	76

REGISTERED CIVIL ENGINEER 10-13-14 DATE

10-13-14
PLANS APPROVAL DATE

REGISTERED PROFESSIONAL ENGINEER
ERIC NORMAN SOUZA
No. 75706
Exp. 06-30-16
CIVIL
STATE OF CALIFORNIA

THE STATE OF CALIFORNIA OR ITS OFFICERS OR AGENTS SHALL NOT BE RESPONSIBLE FOR THE ACCURACY OR COMPLETENESS OF SCANNED COPIES OF THIS PLAN SHEET.

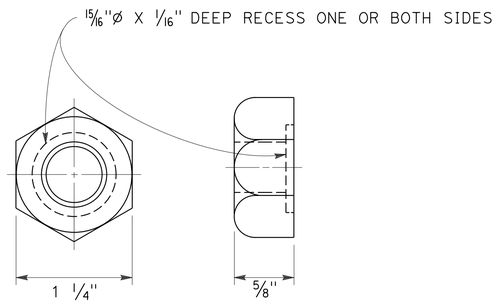

5/8" RECESS NUT

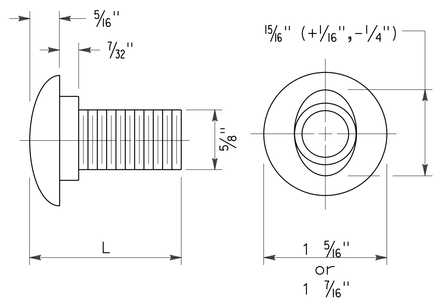

5/8"Ø BUTTON HEAD BOLT

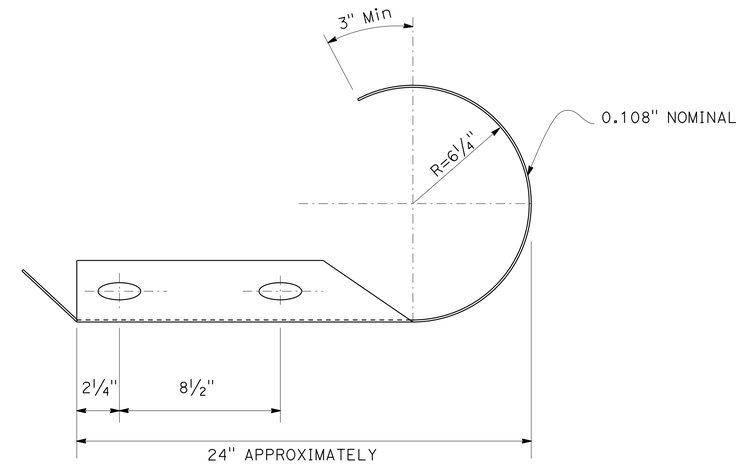

L	THREAD LENGTH
1 3/8"	FULL THREAD LENGTH
2"	FULL THREAD LENGTH

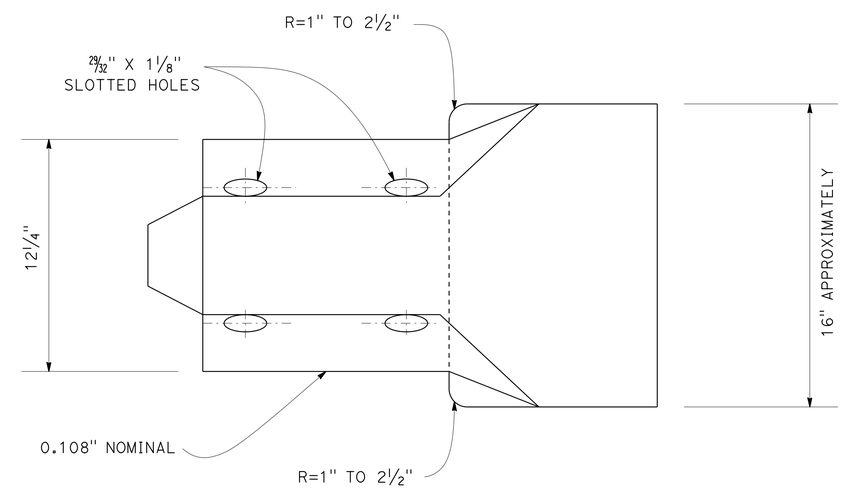

END CAP (3/4 WRAP END SECTION) DETAILS

CONSTRUCTION DETAILS

NO SCALE

C-2

STATE OF CALIFORNIA - DEPARTMENT OF TRANSPORTATION
Caltrans
TRAFFIC

FUNCTIONAL SUPERVISOR: STEPHEN WRIGHT
CALCULATED-DESIGNED BY: A.G. CHIN
CHECKED BY: CAROL MESMAN
REVISED BY
DATE REVISED

LAST REVISION 06-30-14
DATE PLOTTED => 14-NOV-2014
TIME PLOTTED => 14:45

Dist	COUNTY	ROUTE	POST MILES TOTAL PROJECT	SHEET No.	TOTAL SHEETS
03	But	99	40.5/40.8	10	76

REGISTERED CIVIL ENGINEER 10-13-14 DATE

10-13-14
PLANS APPROVAL DATE

REGISTERED PROFESSIONAL ENGINEER ERIC NORMAN SOUZA No. 75706 Exp. 06-30-16 CIVIL STATE OF CALIFORNIA

THE STATE OF CALIFORNIA OR ITS OFFICERS OR AGENTS SHALL NOT BE RESPONSIBLE FOR THE ACCURACY OR COMPLETENESS OF SCANNED COPIES OF THIS PLAN SHEET.

MARKER (CULVERT) STENCILED NUMBERS

DRAINAGE SYSTEM No.	Sta	XX.XX
1	"Q1" 62+40 Rt	45.52
2	"Q1" 66+80 Rt	45.60
3	"Q1" 63+25 Lt	45.54
3	"Q1" 67+25 Lt	45.59

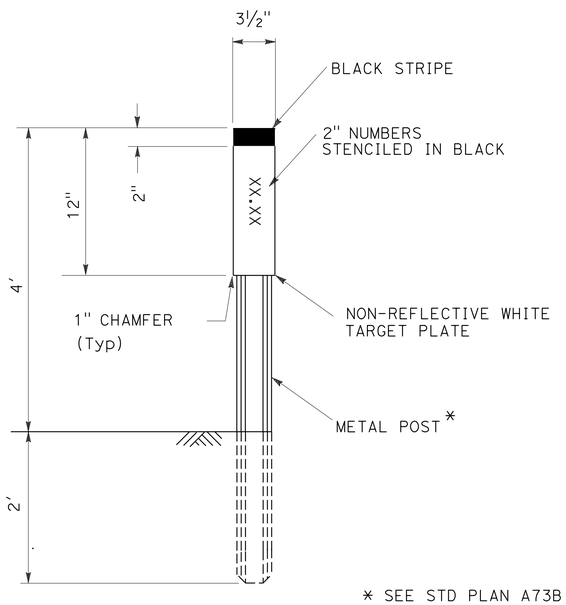

MARKER (CULVERT)

MARKER (CULVERT) NOTES:

1. PLACE MINIMUM 2' FROM EDGE OF PAVEMENT.
2. EXACT LOCATION TO BE DETERMINED BY THE ENGINEER.

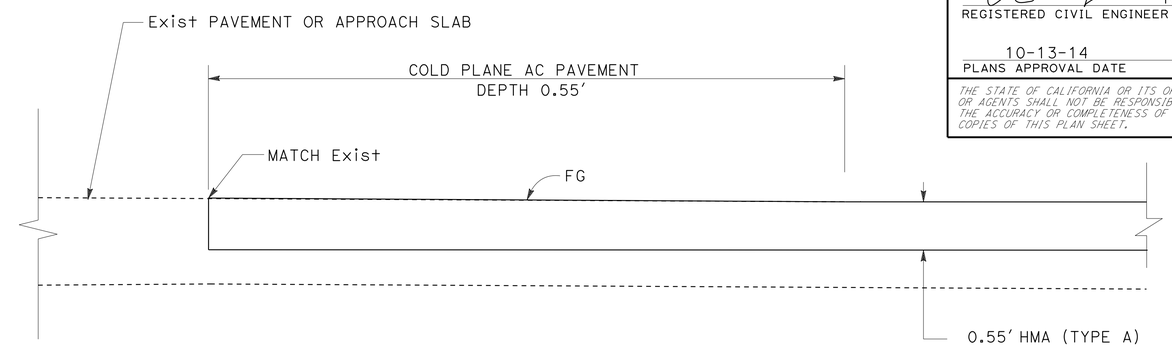

PERMANENT TAPER DETAIL - HMA - Var LENGTH

LEGEND:

HMA MATERIAL (TEMPORARY TAPER)

IF NECESSARY, COLD PLANE ASPHALT CONCRETE PAVEMENT AND PLACE HMA MATERIAL (SEE NOTE 1)

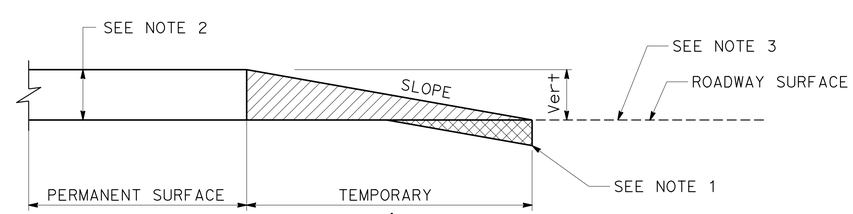

Vert	SLOPE RATIO Horiz/Vert
0-0.10'	30:1
GREATER THAN 0.10'	100:1

NOTES:

1. GRIND EXISTING SURFACES TO ACCOMMODATE A MINIMUM TAPER THICKNESS OF 0.10' WHEN TEMPORARY TAPER WILL BE IN PLACE FOR MORE THAN 14 DAYS.
2. PERMANENT SURFACE MAY BE EXISTING PAVEMENT, NEW PAVEMENT, BRIDGE DECK OR APPROACH SLAB. SEE LAYOUT SHEETS FOR LOCATIONS.
3. ROADWAY SURFACE IS THE TOP OF EXISTING SURFACE OR THE TOP OF THE COLD PLANED SURFACING.

TYPICAL PAVING CONFORM FOR TEMPORARY CONSTRUCTION TAPERS

CONSTRUCTION DETAILS

NO SCALE

C-3

STATE OF CALIFORNIA - DEPARTMENT OF TRANSPORTATION
Caltrans
TRAFFIC

FUNCTIONAL SUPERVISOR: STEPHEN WRIGHT
CALCULATED-DESIGNED BY: CAROL MESMAN
CHECKED BY: ERIC SOUZA
REVISED BY
DATE REVISED

LAST REVISION 06-30-14
DATE PLOTTED => 14-NOV-2014
TIME PLOTTED => 14:45

Dist	COUNTY	ROUTE	POST MILES TOTAL PROJECT	SHEET No.	TOTAL SHEETS
03	But	99	40.5/40.8	11	76

REGISTERED CIVIL ENGINEER 10-13-14 DATE

PLANS APPROVAL DATE 10-13-14

REGISTERED PROFESSIONAL ENGINEER ERIC NORMAN SOUZA No. 75706 Exp. 06-30-16 CIVIL STATE OF CALIFORNIA

THE STATE OF CALIFORNIA OR ITS OFFICERS OR AGENTS SHALL NOT BE RESPONSIBLE FOR THE ACCURACY OR COMPLETENESS OF SCANNED COPIES OF THIS PLAN SHEET.

NOTE:

1. FOR ACCURATE RIGHT OF WAY DATA, CONTACT RIGHT OF WAY ENGINEERING AT THE DISTRICT OFFICE.

LEGEND

0.25' HMA (TYPE A)
0.50' CLASS 2 AB
ROADWAY EXCAVATION

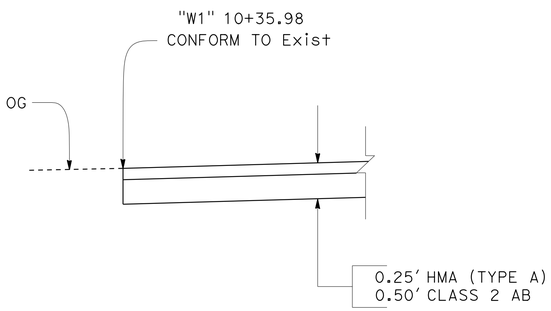

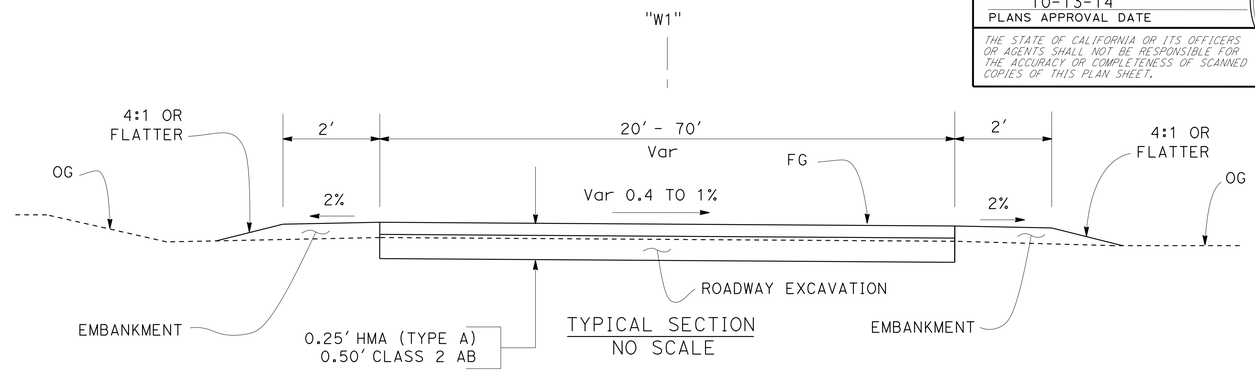

TYPICAL SECTION
NO SCALE

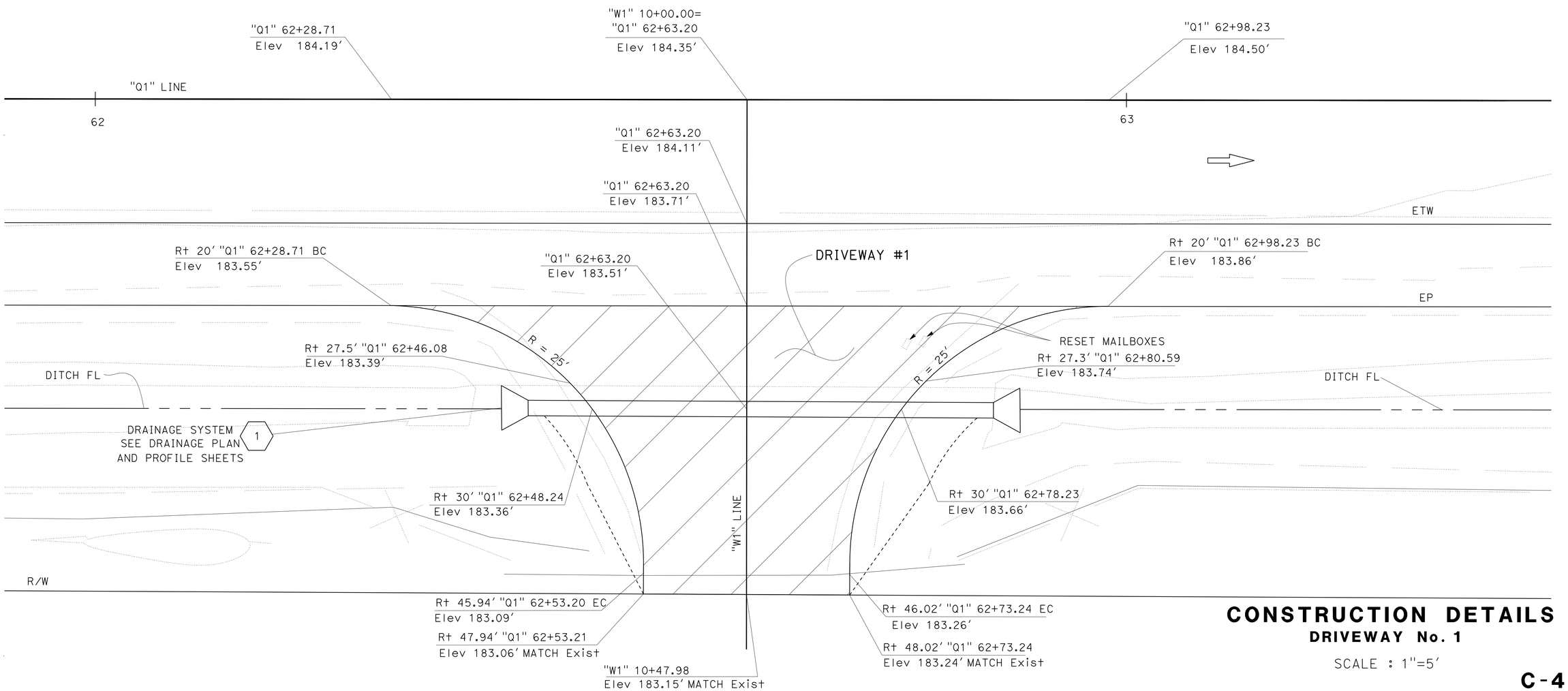

CONSTRUCTION DETAILS

DRIVEWAY No. 1

SCALE : 1"=5'

C-4

STATE OF CALIFORNIA - DEPARTMENT OF TRANSPORTATION
Caltrans
TRAFFIC

FUNCTIONAL SUPERVISOR: STEPHEN WRIGHT
CALCULATED-DESIGNED BY: ANDY LUU
CHECKED BY: CAROL MESMAN
REVISED BY
DATE REVISED

LAST REVISION 06-30-14
DATE PLOTTED => 14-NOV-2014
TIME PLOTTED => 14:45

Dist	COUNTY	ROUTE	POST MILES TOTAL PROJECT	SHEET No.	TOTAL SHEETS
03	But	99	40.5/40.8	12	76

REGISTERED CIVIL ENGINEER 10-13-14 DATE

10-13-14
PLANS APPROVAL DATE

REGISTERED PROFESSIONAL ENGINEER ERIC NORMAN SOUZA No. 75706 Exp. 06-30-16 CIVIL STATE OF CALIFORNIA

THE STATE OF CALIFORNIA OR ITS OFFICERS OR AGENTS SHALL NOT BE RESPONSIBLE FOR THE ACCURACY OR COMPLETENESS OF SCANNED COPIES OF THIS PLAN SHEET.

NOTE:

1. FOR ACCURATE RIGHT OF WAY DATA, CONTACT RIGHT OF WAY ENGINEERING AT THE DISTRICT OFFICE.

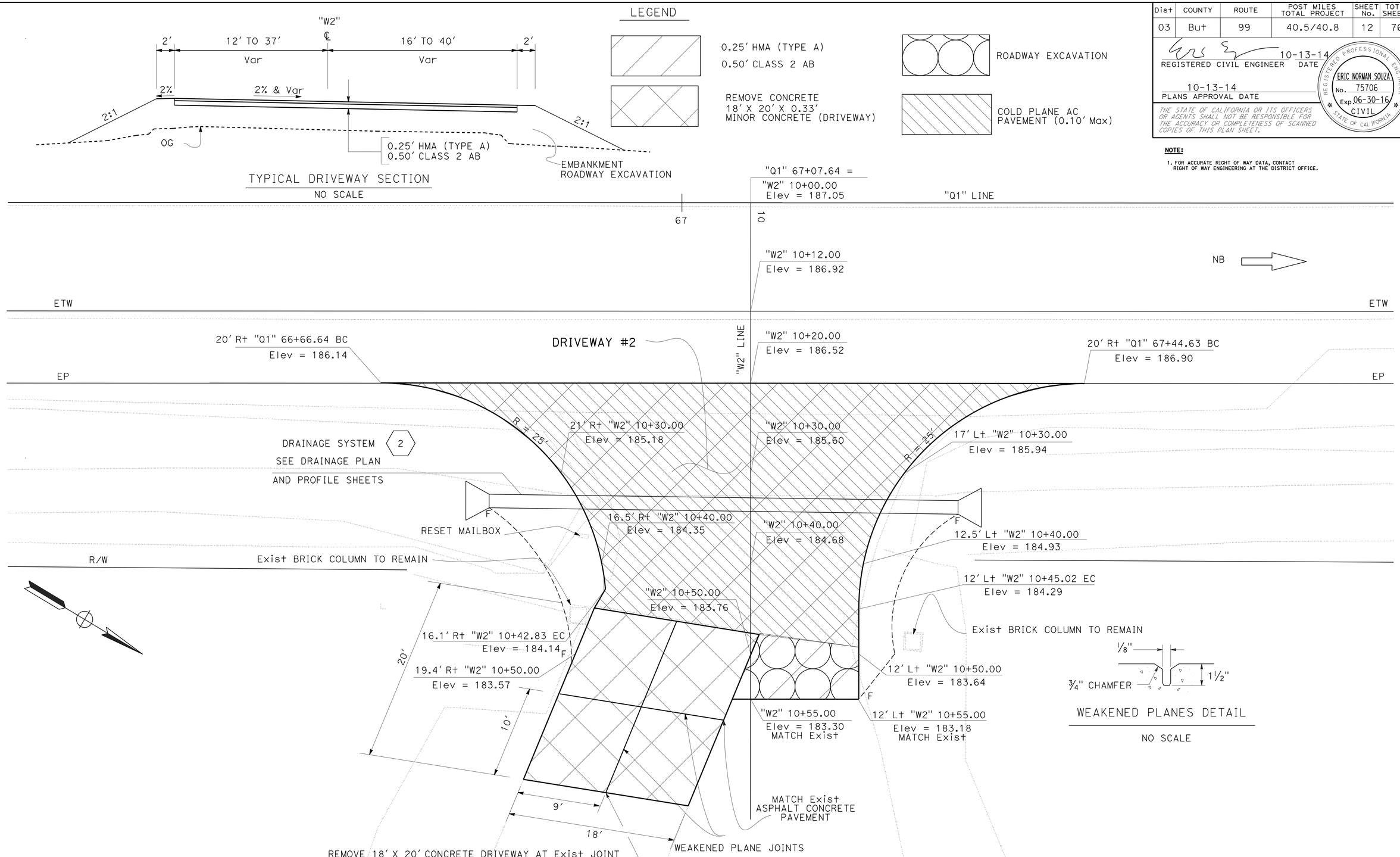

CONSTRUCTION DETAILS

DRIVEWAY No. 2

SCALE : 1"=5'

C-5

STATE OF CALIFORNIA - DEPARTMENT OF TRANSPORTATION

Caltrans

TRAFFIC

FUNCTIONAL SUPERVISOR: STEPHEN WRIGHT

CALCULATED-DESIGNED BY: A.G. CHIN

CHECKED BY: CAROL MESMAN

REVISED BY | DATE REVISED

LAST REVISION 06-30-14 | DATE PLOTTED => 14-NOV-2014 | TIME PLOTTED => 14:45

Dist	COUNTY	ROUTE	POST MILES TOTAL PROJECT	SHEET No.	TOTAL SHEETS
03	But	99	40.5/40.8	13	76

REGISTERED CIVIL ENGINEER 10-13-14 DATE

10-13-14
PLANS APPROVAL DATE

REGISTERED PROFESSIONAL ENGINEER
ERIC NORMAN SOUZA
No. 75706
Exp. 06-30-16
CIVIL
STATE OF CALIFORNIA

THE STATE OF CALIFORNIA OR ITS OFFICERS OR AGENTS SHALL NOT BE RESPONSIBLE FOR THE ACCURACY OR COMPLETENESS OF SCANNED COPIES OF THIS PLAN SHEET.

NOTES:

1. EXISTING UTILITY FACILITIES HAVE NOT BEEN PLOTTED ON THESE PLANS.
2. CENTERLINE STRIPING PATTERN TO MATCH EXISTING UNLESS OTHERWISE NOTED.
3. SEE STANDARD PLAN A40B FOR SHOULDER RUMBLE STRIP DETAILS.

LEGEND

⇨ DIRECTION OF TRAVEL

RUMBLE STRIP (HMA, GROUND-IN INDENTATIONS)

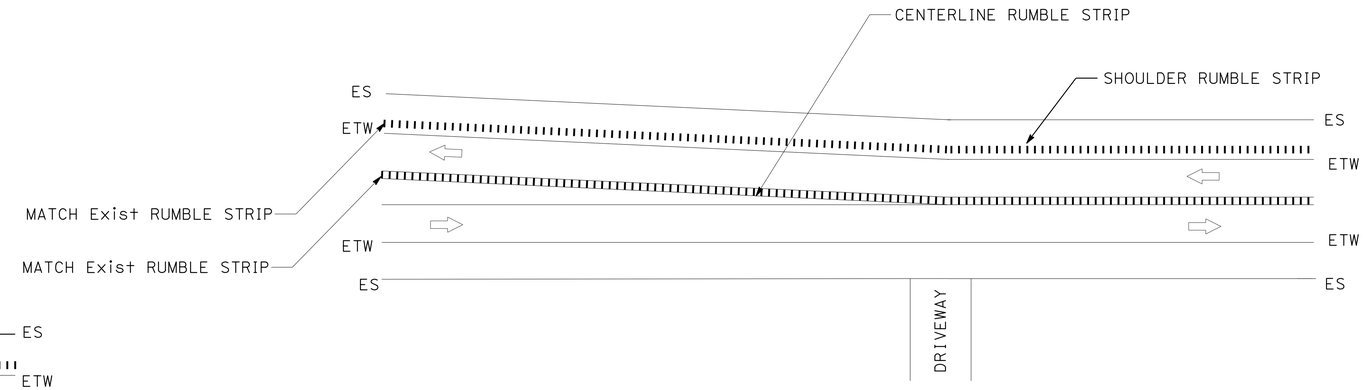

RUMBLE STRIPS AT SOUTH END CONFORM

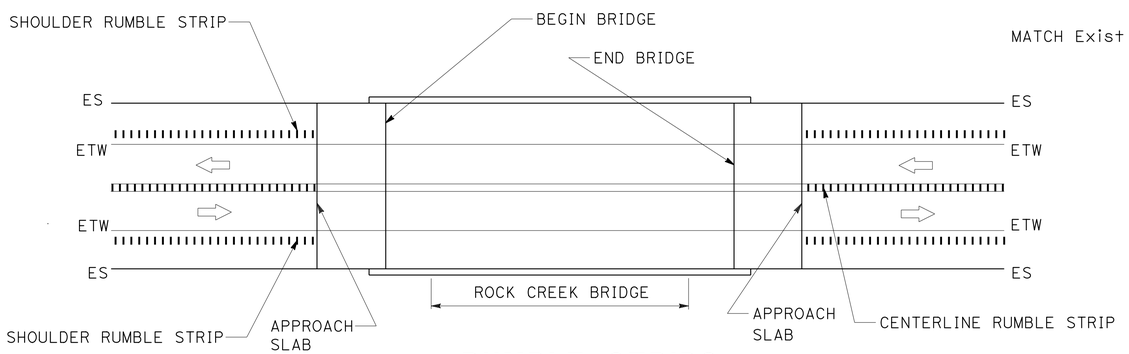

RUMBLE STRIPS AT ROCK CREEK BRIDGE

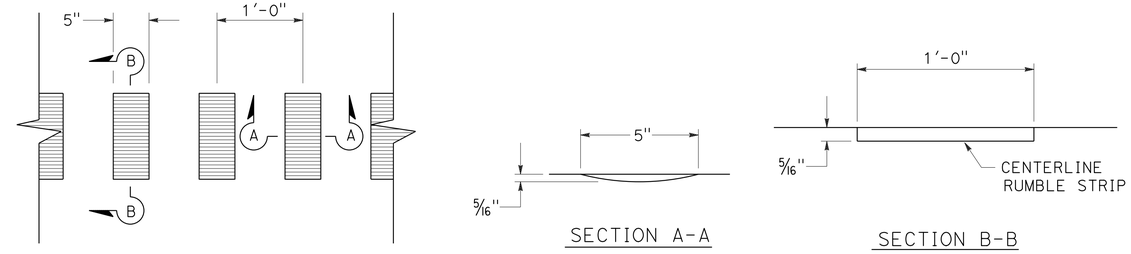

CENTERLINE RUMBLE STRIP DETAILS

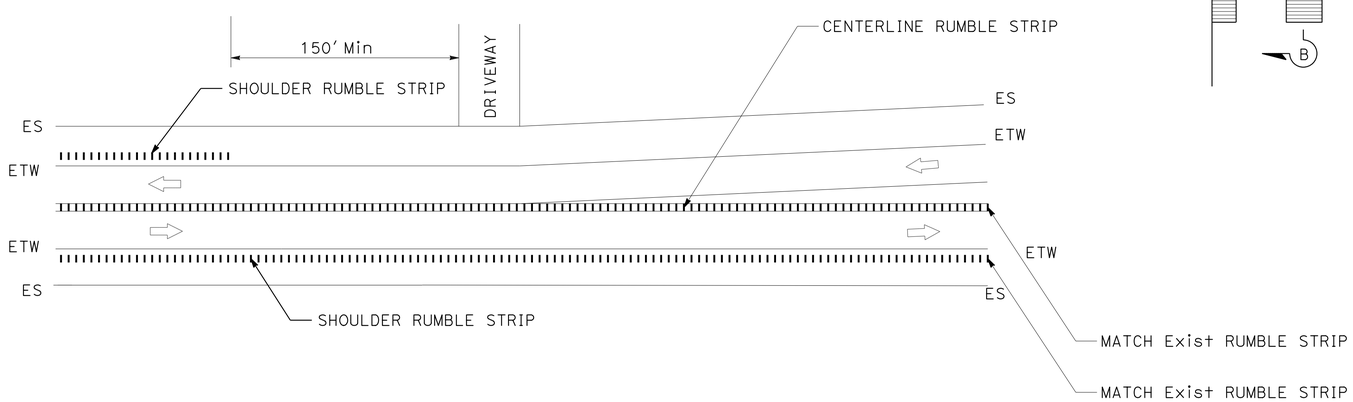

RUMBLE STRIPS AT NORTH END CONFORM

SEE PRIVATE ROAD DETAIL FOR MORE INFORMATION

CONSTRUCTION DETAILS

NO SCALE

C-6

STATE OF CALIFORNIA - DEPARTMENT OF TRANSPORTATION
Caltrans
TRAFFIC

FUNCTIONAL SUPERVISOR: STEPHEN WRIGHT
CALCULATED-DESIGNED BY: ERIC SOUZA
CHECKED BY: CAROL MESMAN
REVISED BY
DATE REVISED

LAST REVISION 06-30-14
DATE PLOTTED => 14-NOV-2014
TIME PLOTTED => 14:45

Dist	COUNTY	ROUTE	POST MILES TOTAL PROJECT	SHEET No.	TOTAL SHEETS
03	But	99	40.5/40.8	14	76

REGISTERED CIVIL ENGINEER 10-13-14 DATE

10-13-14
PLANS APPROVAL DATE

REGISTERED PROFESSIONAL ENGINEER
ERIC NORMAN SOUZA
No. 75706
Exp. 06-30-16
CIVIL
STATE OF CALIFORNIA

THE STATE OF CALIFORNIA OR ITS OFFICERS OR AGENTS SHALL NOT BE RESPONSIBLE FOR THE ACCURACY OR COMPLETENESS OF SCANNED COPIES OF THIS PLAN SHEET.

NOTE:
1. USE 15'-7½" LENGTH RAIL.

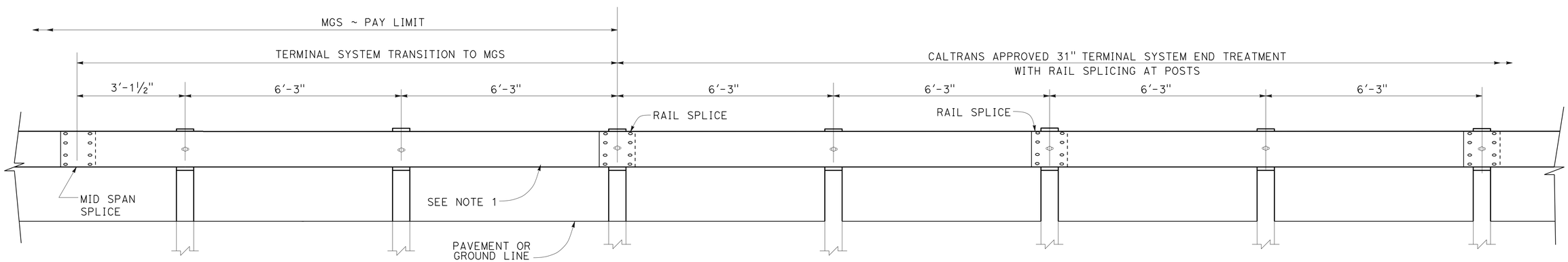

TRANSITION DETAIL FOR 31" TERMINAL SYSTEM END TREATMENT WITH RAIL SPLICING AT POSTS TO MIDWEST GUARDRAIL SYSTEM

SEE PRIVATE ROAD DETAIL FOR MORE INFORMATION

CONSTRUCTION DETAILS

NO SCALE

C-7

STATE OF CALIFORNIA - DEPARTMENT OF TRANSPORTATION
Caltrans
TRAFFIC

FUNCTIONAL SUPERVISOR: STEPHEN WRIGHT
CALCULATED-DESIGNED BY: ERIC SOUZA
CHECKED BY: CAROL MESMAN
REVISED BY
DATE REVISED

LAST REVISION 06-30-14
DATE PLOTTED => 14-NOV-2014
TIME PLOTTED => 14:45

Dist	COUNTY	ROUTE	POST MILES TOTAL PROJECT	SHEET No.	TOTAL SHEETS
03	But	99	40.5/40.8	15	76

REGISTERED CIVIL ENGINEER 10-13-14 DATE

10-13-14
PLANS APPROVAL DATE

REGISTERED PROFESSIONAL ENGINEER
ERIC NORMAN SOUZA
No. 75706
Exp. 06-30-16
CIVIL
STATE OF CALIFORNIA

THE STATE OF CALIFORNIA OR ITS OFFICERS OR AGENTS SHALL NOT BE RESPONSIBLE FOR THE ACCURACY OR COMPLETENESS OF SCANNED COPIES OF THIS PLAN SHEET.

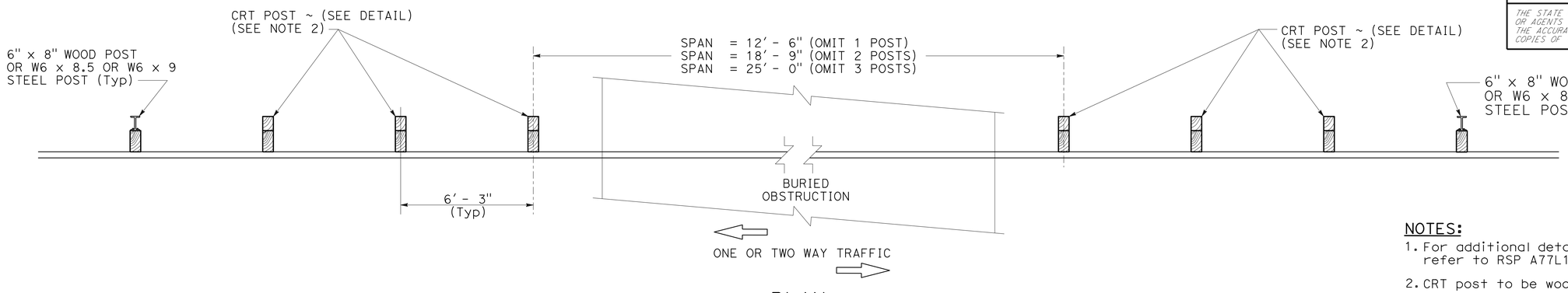

PLAN

NOTES:

1. For additional details not shown on this plan, refer to RSP A77L1 and RSP A77L2.
2. CRT post to be wood only.

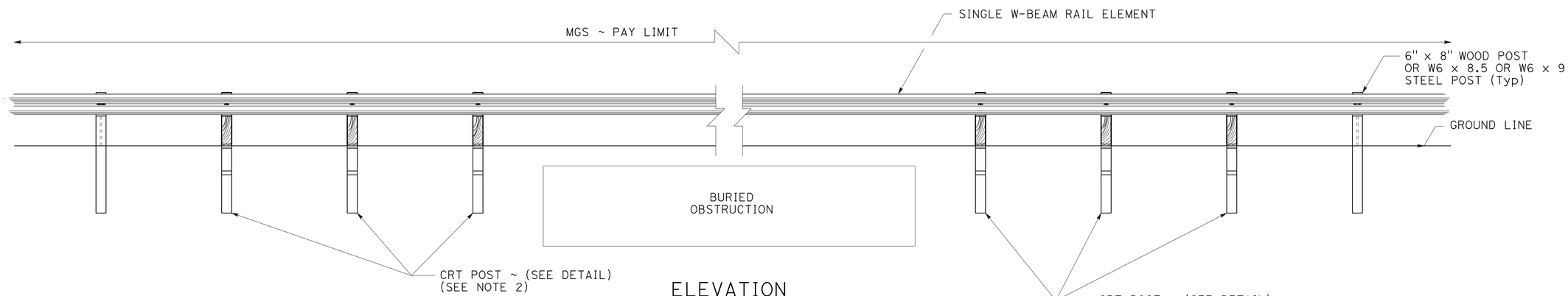

ELEVATION

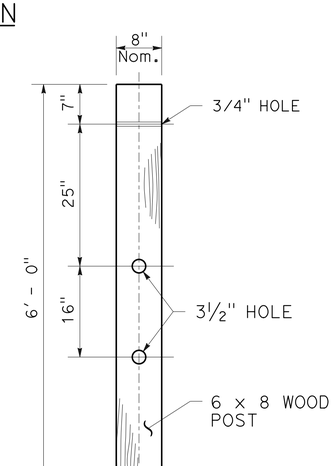

CONTROLLED RELEASING
TERMINAL (CRT) POST DETAIL

CONSTRUCTION DETAILS

NO SCALE

C-8

STATE OF CALIFORNIA - DEPARTMENT OF TRANSPORTATION
Caltrans
TRAFFIC

FUNCTIONAL SUPERVISOR: STEPHEN WRIGHT
CALCULATED-DESIGNED BY: ERIC SOUZA
CHECKED BY: CAROL MESMAN
REVISED BY
DATE REVISED

LAST REVISION 06-30-14
DATE PLOTTED => 14-NOV-2014
TIME PLOTTED => 14:45

Dist	COUNTY	ROUTE	POST MILES TOTAL PROJECT	SHEET No.	TOTAL SHEETS
03	But	99	40.5/40.8	16	76

REGISTERED CIVIL ENGINEER 10-13-14 DATE

10-13-14
PLANS APPROVAL DATE

REGISTERED PROFESSIONAL ENGINEER
ERIC NORMAN SOUZA
No. 75706
Exp. 06-30-16
CIVIL
STATE OF CALIFORNIA

THE STATE OF CALIFORNIA OR ITS OFFICERS OR AGENTS SHALL NOT BE RESPONSIBLE FOR THE ACCURACY OR COMPLETENESS OF SCANNED COPIES OF THIS PLAN SHEET.

NOTES:

1. REDWOOD MATERIAL SHALL BE 2" x 6" OR 2" x 8" TRIMMED TO FIT WITHIN BOTTOM OF MAILBOX FLANGES.
2. DETAILS SHOWN ARE FOR 6" WIDTH MAIL BOXES. CONTRACTOR SHALL VERIFY DIMENSIONS IN THE FIELD.
3. MAILBOX SUPPORT HARDWARE SHALL BE GALVANIZED STEEL.

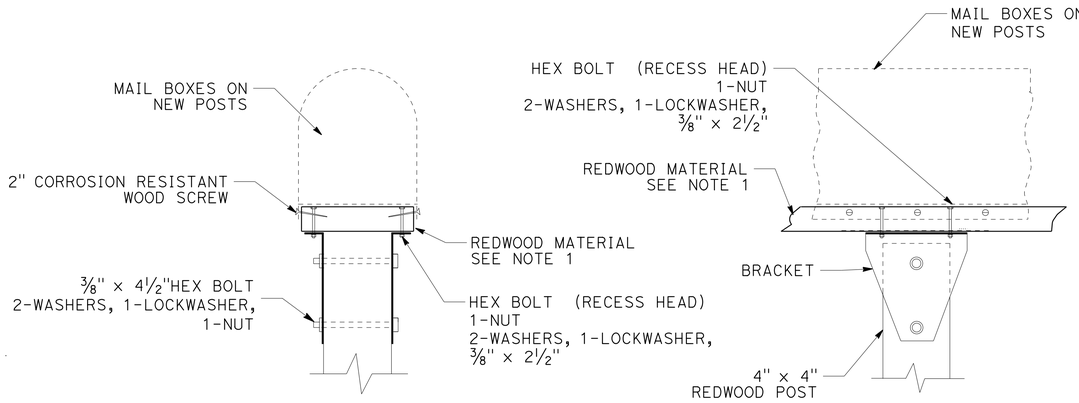

SINGLE MAILBOX ASSEMBLIES

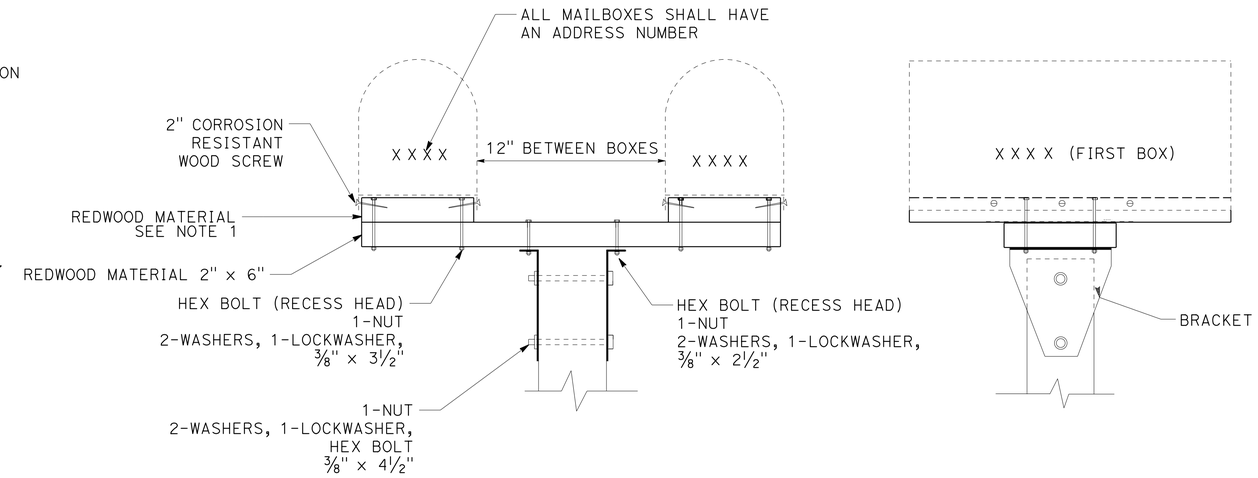

DOUBLE MAILBOX ASSEMBLIES

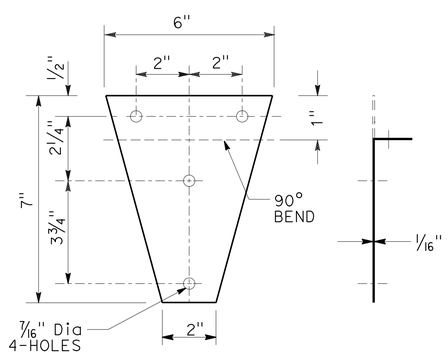

BRACKET

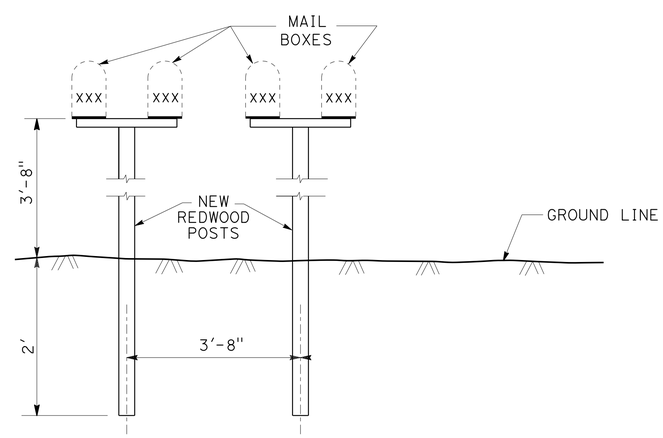

SETTING AND SPACING

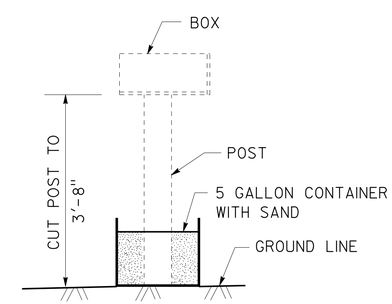

TEMPORARY MAILBOX DETAIL

CONSTRUCTION DETAILS
RESET MAILBOX
NO SCALE

C-9

STATE OF CALIFORNIA - DEPARTMENT OF TRANSPORTATION
Caltrans
TRAFFIC

FUNCTIONAL SUPERVISOR: STEPHEN WRIGHT
CALCULATED-DESIGNED BY: ERIC SOUZA
CHECKED BY: CAROL MESMAN
REVISED BY
DATE REVISED

LAST REVISION 06-30-14
DATE PLOTTED => 14-NOV-2014
TIME PLOTTED => 14:45

Dist	COUNTY	ROUTE	POST MILES TOTAL PROJECT	SHEET No.	TOTAL SHEETS
03	But	99	40.5/40.8	17	76

REGISTERED CIVIL ENGINEER 10-13-14 DATE

10-13-14
PLANS APPROVAL DATE

REGISTERED PROFESSIONAL ENGINEER
ERIC NORMAN SOUZA
No. 75706
Exp. 06-30-16
CIVIL
STATE OF CALIFORNIA

THE STATE OF CALIFORNIA OR ITS OFFICERS OR AGENTS SHALL NOT BE RESPONSIBLE FOR THE ACCURACY OR COMPLETENESS OF SCANNED COPIES OF THIS PLAN SHEET.

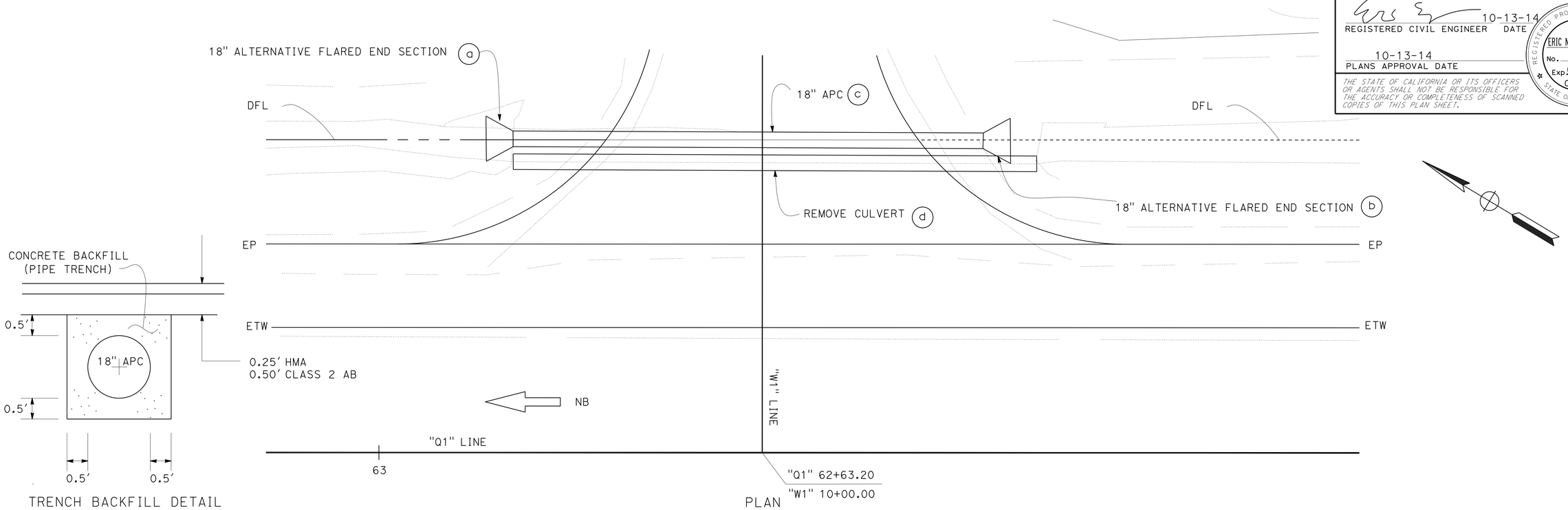

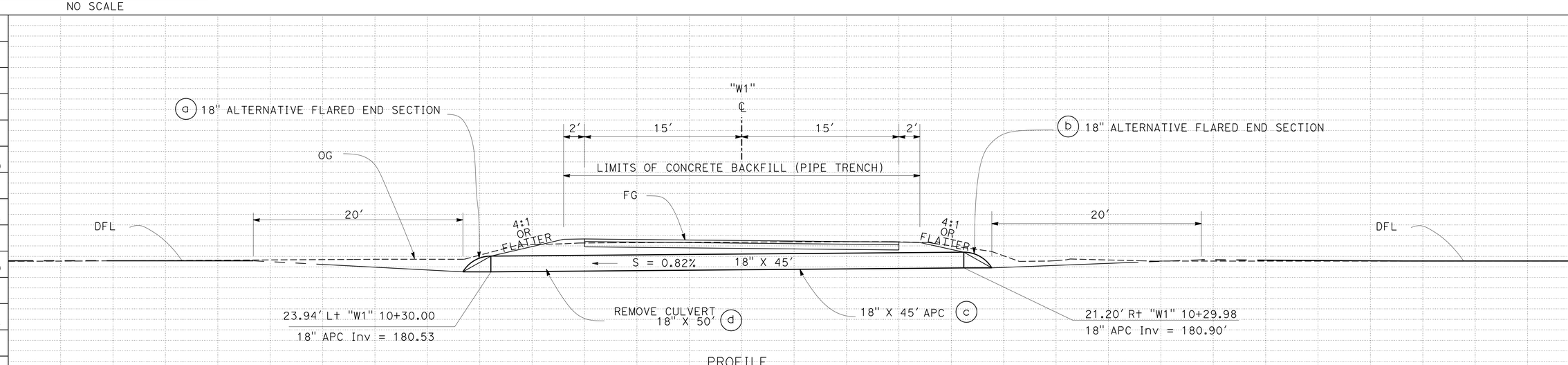

DRAINAGE SYSTEM (1)

STA "W1" 10+30.00

DRAINAGE PLAN AND PROFILE

SCALE : 1"=5' Horiz
1"=5' Vert

D-1

STATION		TOTAL
CY	Exc	
	Emb	

APPROVED FOR DRAINAGE WORK ONLY

A.G. CHIN — CAROL MESMAN — STEPHEN WRIGHT

REVISED BY — DATE REVISED — CALCULATED-DESIGNED BY — CHECKED BY — FUNCTIONAL SUPERVISOR

STATE OF CALIFORNIA - DEPARTMENT OF TRANSPORTATION
Caltrans
TRAFFIC

LAST REVISION 06-30-14 — DATE PLOTTED => 14-NOV-2014 — TIME PLOTTED => 14:45

Dist	COUNTY	ROUTE	POST MILES TOTAL PROJECT	SHEET No.	TOTAL SHEETS
03	But	99	40.5/40.8	18	76

REGISTERED CIVIL ENGINEER 10-13-14 DATE

10-13-14
PLANS APPROVAL DATE

REGISTERED PROFESSIONAL ENGINEER
ERIC NORMAN SOUZA
No. 75706
Exp. 06-30-16
CIVIL
STATE OF CALIFORNIA

THE STATE OF CALIFORNIA OR ITS OFFICERS OR AGENTS SHALL NOT BE RESPONSIBLE FOR THE ACCURACY OR COMPLETENESS OF SCANNED COPIES OF THIS PLAN SHEET.

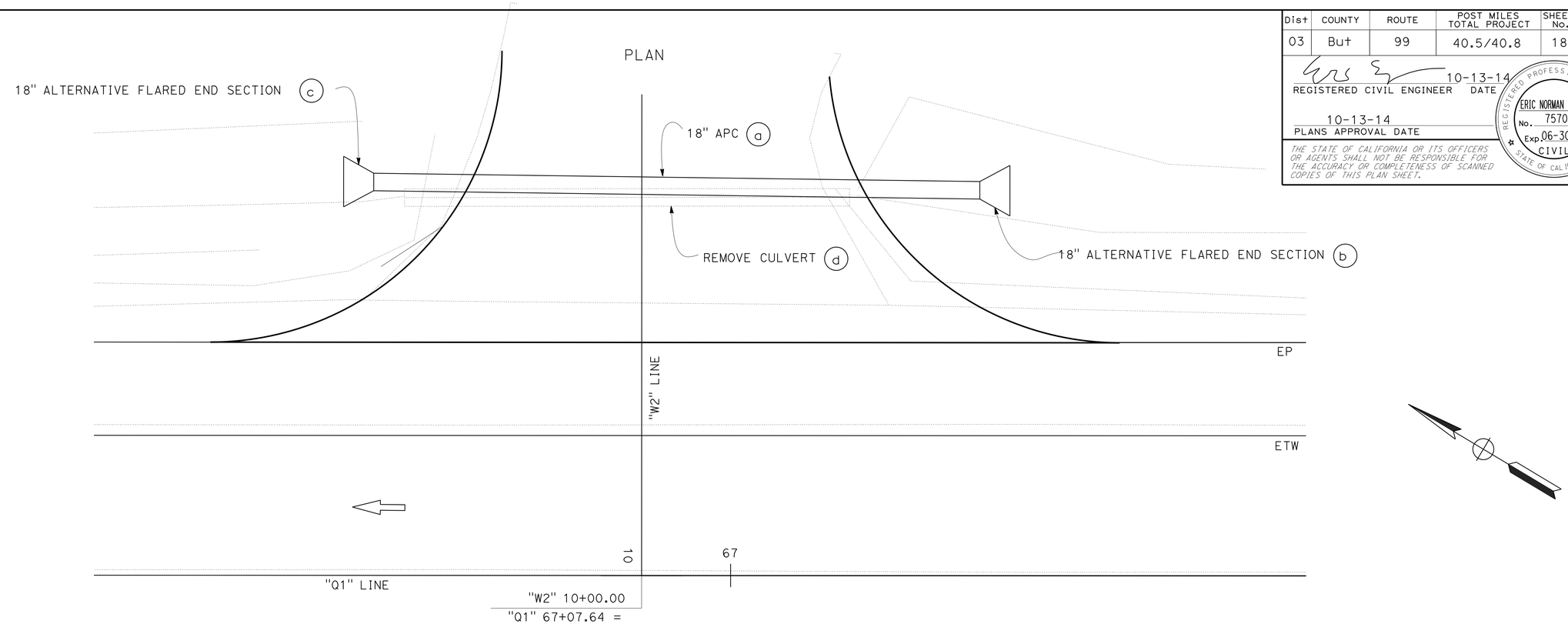

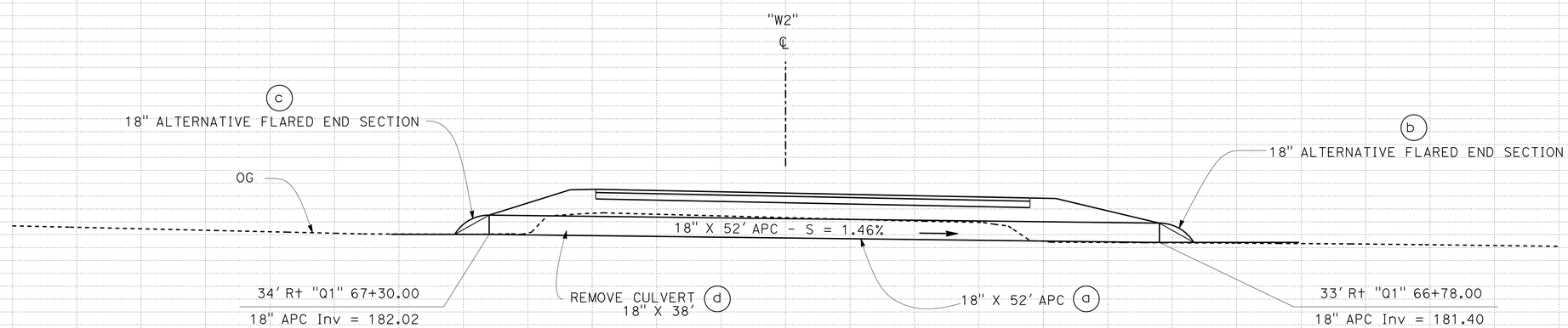

PROFILE

DRAINAGE SYSTEM (2)

"W2" 10+33.46

DRAINAGE PLAN AND PROFILE

SCALE : 1"=5' Horiz
1"=5' Vert

D-2

STATION		TOTAL
CY	Exc	
	Emb	

APPROVED FOR DRAINAGE WORK ONLY

REVISED BY	DATE REVISED

CALCULATED-DESIGNED BY	A.G. CHIN
CHECKED BY	CAROL MESMAN
FUNCTIONAL SUPERVISOR	STEPHEN WRIGHT

STATE OF CALIFORNIA - DEPARTMENT OF TRANSPORTATION
Caltrans
TRAFFIC

LAST REVISION 06-30-14
DATE PLOTTED => 14-NOV-2014
TIME PLOTTED => 14:45

NOTES: 1. FOR DETAILS NOT SHOWN SEE STANDARD PLANS.

Dist	COUNTY	ROUTE	POST MILES TOTAL PROJECT	SHEET No.	TOTAL SHEETS
03	But	99	40.5/40.8	19	76

REGISTERED CIVIL ENGINEER 10-13-14 DATE

10-13-14
PLANS APPROVAL DATE

REGISTERED PROFESSIONAL ENGINEER
ERIC NORMAN SOUZA
No. 75706
Exp. 06-30-16
CIVIL
STATE OF CALIFORNIA

THE STATE OF CALIFORNIA OR ITS OFFICERS OR AGENTS SHALL NOT BE RESPONSIBLE FOR THE ACCURACY OR COMPLETENESS OF SCANNED COPIES OF THIS PLAN SHEET.

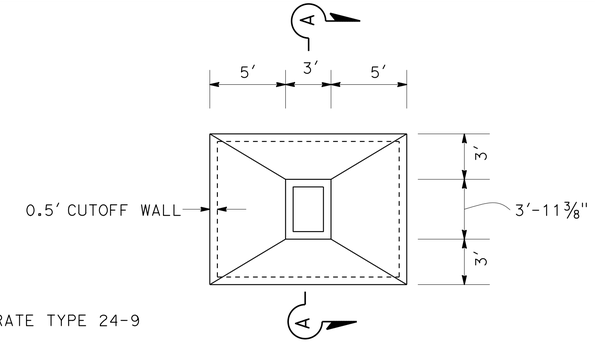

HMA APRON DETAIL (TYPICAL)

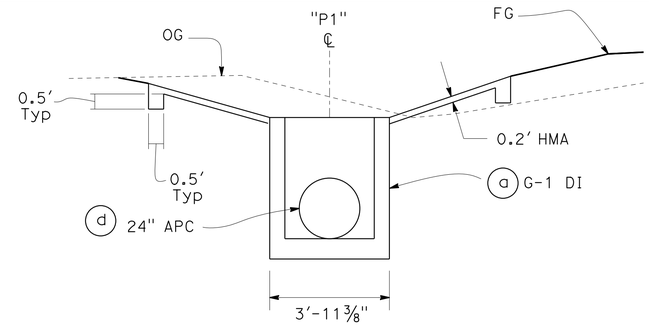

SECTION A-A

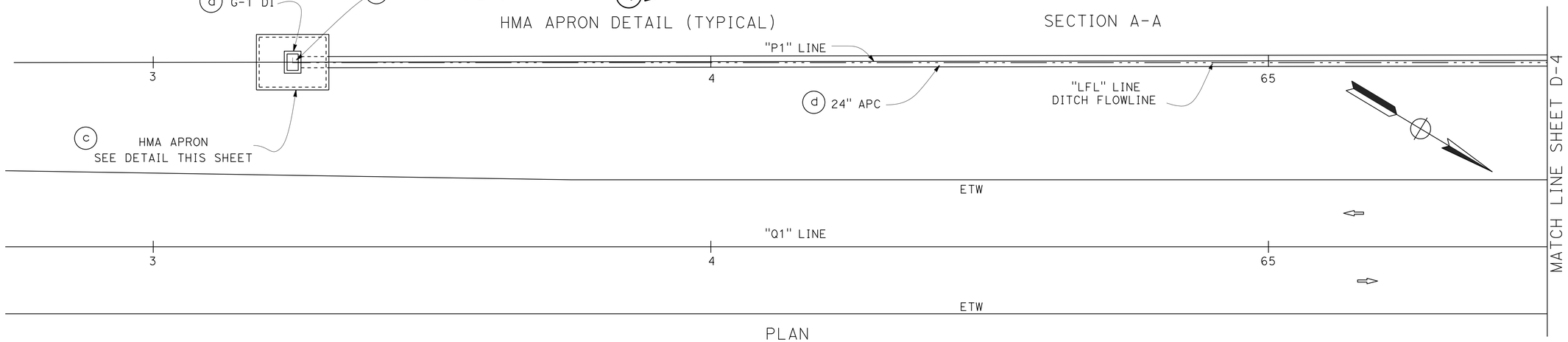

PLAN
"P1" LINE

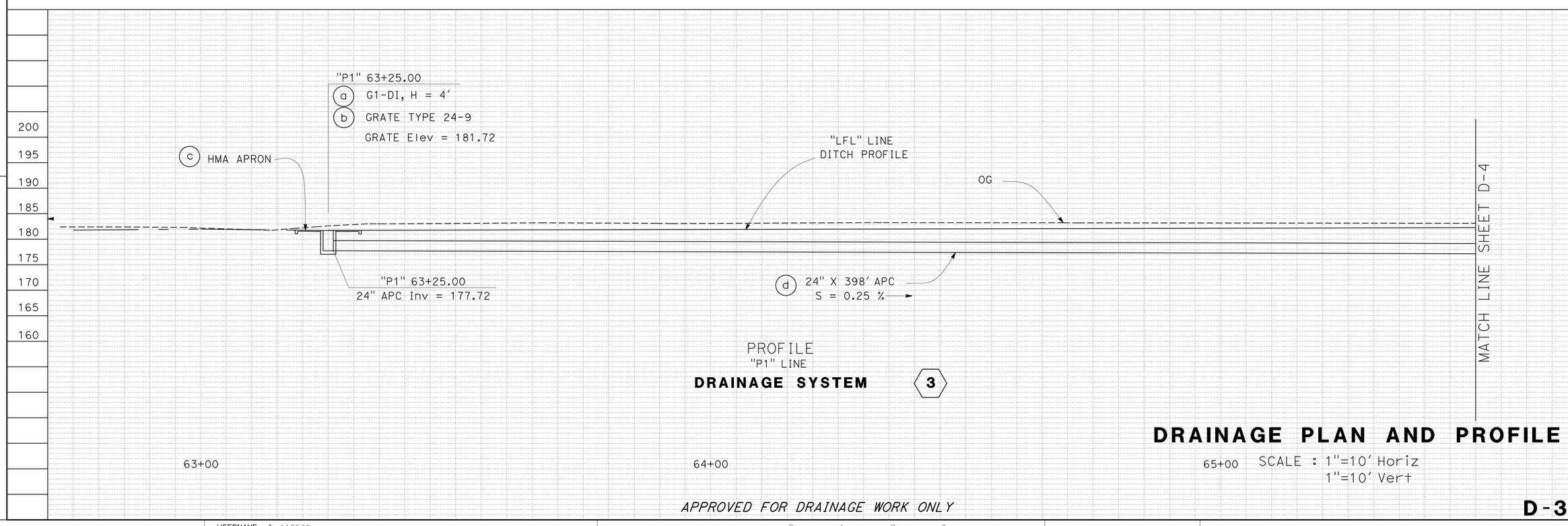

PROFILE
"P1" LINE

DRAINAGE SYSTEM 3

DRAINAGE PLAN AND PROFILE

SCALE : 1"=10′ Horiz
1"=10′ Vert

APPROVED FOR DRAINAGE WORK ONLY

D-3

A.G. CHIN — CAROL MESMAN — STEPHEN WRIGHT

REVISED BY — DATE REVISED — CALCULATED-DESIGNED BY — CHECKED BY — FUNCTIONAL SUPERVISOR

STATE OF CALIFORNIA - DEPARTMENT OF TRANSPORTATION
Caltrans
TRAFFIC

LAST REVISION 07-02-14 — DATE PLOTTED => 14-NOV-2014 — TIME PLOTTED => 14:45

Dist	COUNTY	ROUTE	POST MILES TOTAL PROJECT	SHEET No.	TOTAL SHEETS
03	But	99	40.5/40.8	20	76

REGISTERED CIVIL ENGINEER 10-13-14 DATE

10-13-14
PLANS APPROVAL DATE

REGISTERED PROFESSIONAL ENGINEER
ERIC NORMAN SOUZA
No. 75706
Exp. 06-30-16
CIVIL
STATE OF CALIFORNIA

THE STATE OF CALIFORNIA OR ITS OFFICERS OR AGENTS SHALL NOT BE RESPONSIBLE FOR THE ACCURACY OR COMPLETENESS OF SCANNED COPIES OF THIS PLAN SHEET.

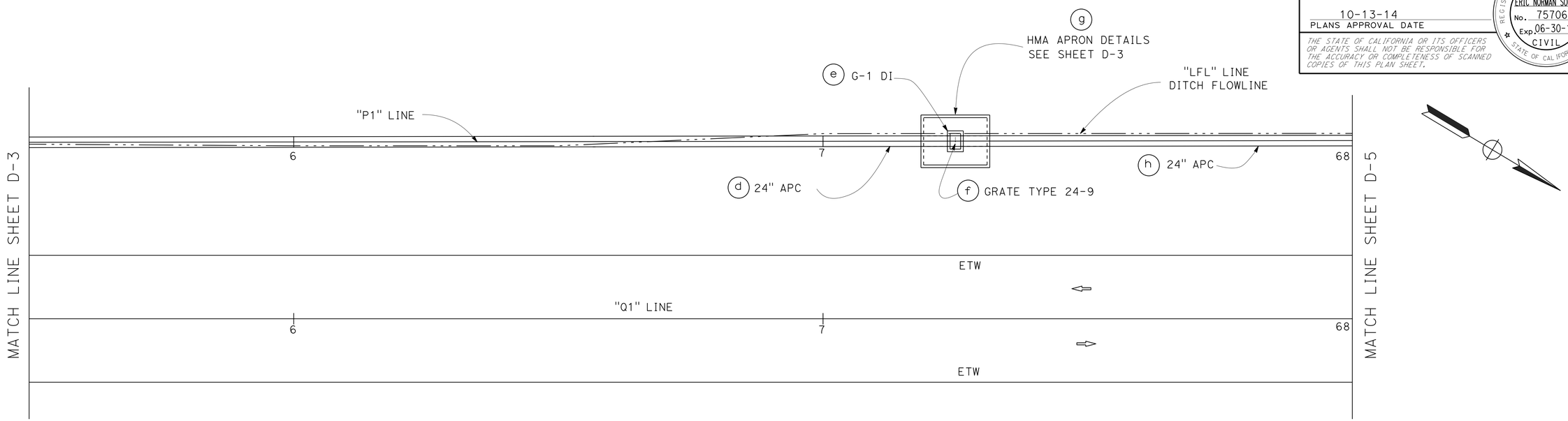

PLAN
"P1" LINE

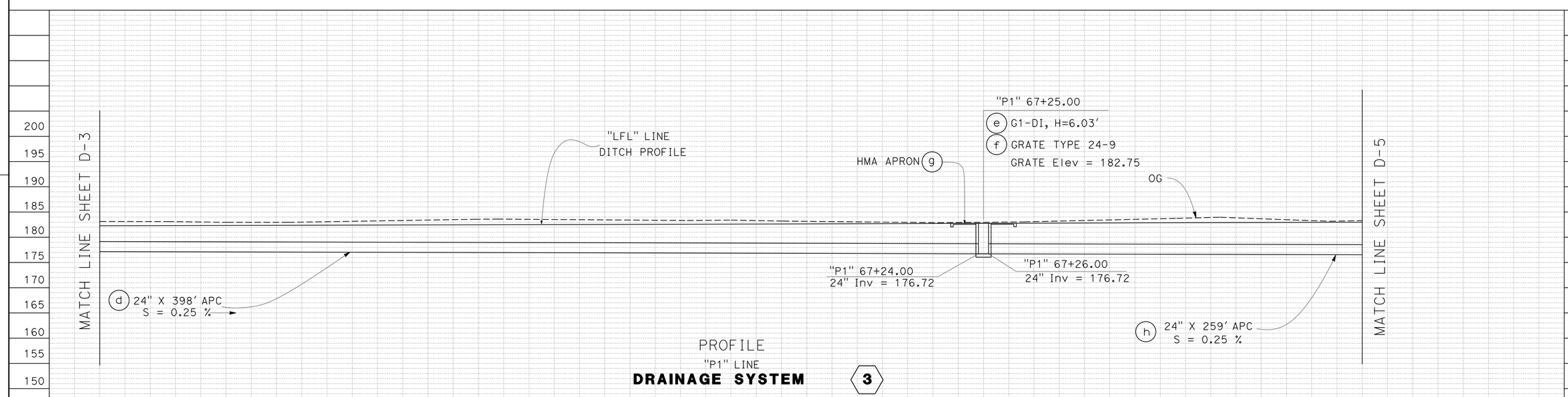

PROFILE
"P1" LINE
DRAINAGE SYSTEM 3

DRAINAGE PLAN AND PROFILE

SCALE : 1"=10' Horiz
1"=10' Vert

APPROVED FOR DRAINAGE WORK ONLY

D-4

REVISED BY	DATE REVISED

CALCULATED-DESIGNED BY: A.G. CHIN
CHECKED BY: CAROL MESMAN
FUNCTIONAL SUPERVISOR: STEPHEN WRIGHT

STATE OF CALIFORNIA - DEPARTMENT OF TRANSPORTATION
Caltrans
TRAFFIC

LAST REVISION 07-02-14
DATE PLOTTED => 14-NOV-2014
TIME PLOTTED => 14:46

Dist	COUNTY	ROUTE	POST MILES TOTAL PROJECT	SHEET No.	TOTAL SHEETS
03	But	99	40.5/40.8	21	76

REGISTERED CIVIL ENGINEER 10-13-14 DATE

10-13-14
PLANS APPROVAL DATE

REGISTERED PROFESSIONAL ENGINEER
ERIC NORMAN SOUZA
No. 75706
Exp. 06-30-16
CIVIL
STATE OF CALIFORNIA

THE STATE OF CALIFORNIA OR ITS OFFICERS OR AGENTS SHALL NOT BE RESPONSIBLE FOR THE ACCURACY OR COMPLETENESS OF SCANNED COPIES OF THIS PLAN SHEET.

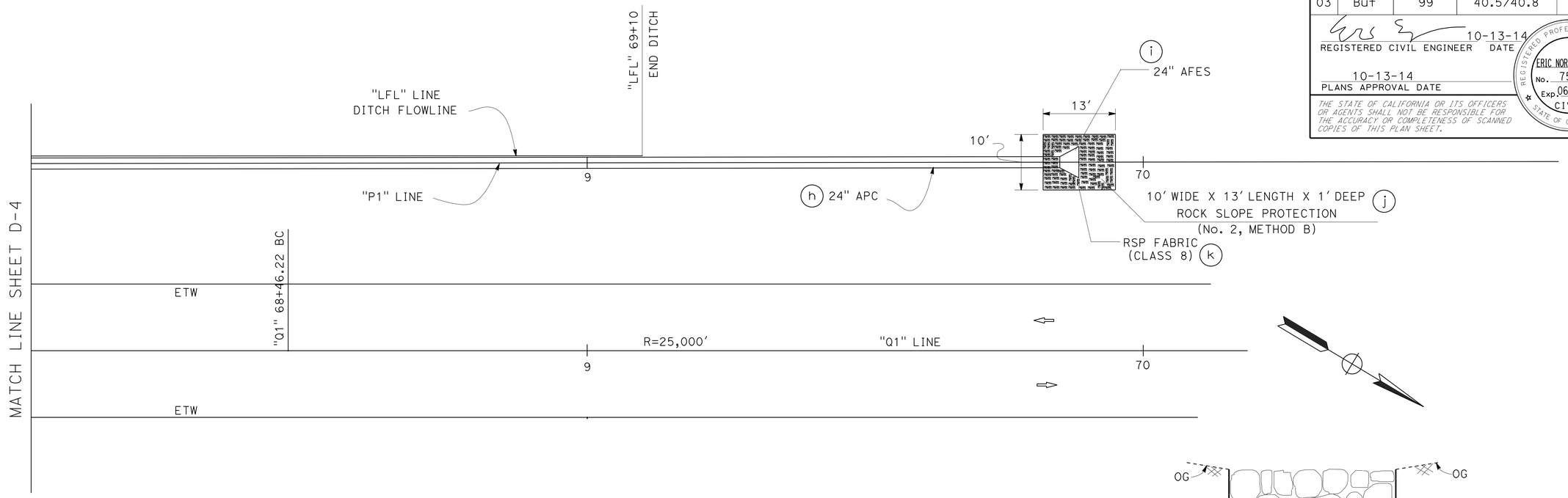

PLAN
"P1" LINE

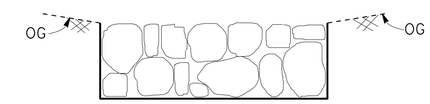

ROCK SLOPE PROTECTION FABRIC LIMITS DETAIL

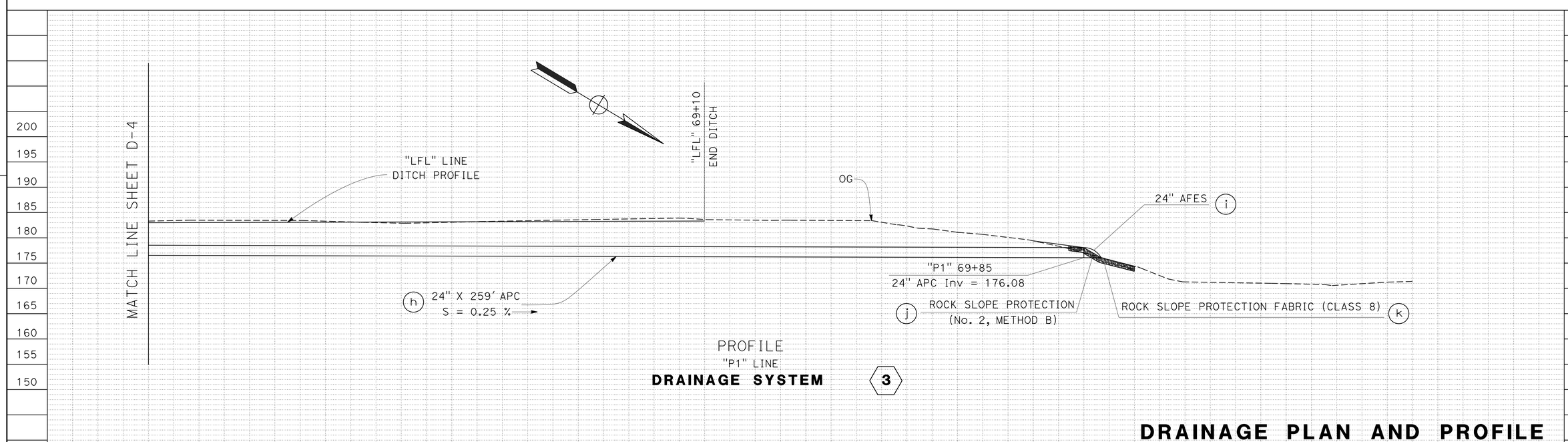

PROFILE
"P1" LINE

DRAINAGE SYSTEM 3

DRAINAGE PLAN AND PROFILE

SCALE : 1"=10' Horiz
1"=10' Vert

APPROVED FOR DRAINAGE WORK ONLY

D-5

REVISED BY	DATE REVISED
A.G. CHIN	CAROL MESMAN
CALCULATED-DESIGNED BY	CHECKED BY
FUNCTIONAL SUPERVISOR	STEPHEN WRIGHT

STATE OF CALIFORNIA - DEPARTMENT OF TRANSPORTATION
Caltrans
TRAFFIC

LAST REVISION 06-30-14 | DATE PLOTTED => 14-NOV-2014 | TIME PLOTTED => 14:46

Dist	COUNTY	ROUTE	POST MILES TOTAL PROJECT	SHEET No.	TOTAL SHEETS
03	But	99	40.5/40.8	22	76

REGISTERED CIVIL ENGINEER 10-13-14 DATE

10-13-14
PLANS APPROVAL DATE

REGISTERED PROFESSIONAL ENGINEER ERIC NORMAN SOUZA No. 75706 Exp. 06-30-16 CIVIL STATE OF CALIFORNIA

THE STATE OF CALIFORNIA OR ITS OFFICERS OR AGENTS SHALL NOT BE RESPONSIBLE FOR THE ACCURACY OR COMPLETENESS OF SCANNED COPIES OF THIS PLAN SHEET.

DRAINAGE QUANTITIES

DRAINAGE SHEET No.	DRAINAGE SYSTEM No.	DRAINAGE UNIT	REMOVE CULVERT	ALTERNATIVE PIPE CULVERT		ALTERNATIVE FLARED END SECTION		G1-DI						*	*		DRAINAGE SHEET No.	DRAINAGE SYSTEM No.	DRAINAGE UNIT
				24"	18"	24"	18"	Misc IRON AND STEEL	(N) GRATE (TYPE 24-9)	MINOR CONCRETE (MINOR STRUCTURE)	* HMA (TYPE A)	* PLACE HMA (Misc AREA)	(N) HMA (TYPE A) APRON	ROCK SLOPE PROTECTION (No. 2, METHOD B)	ROCK SLOPE PROTECTION FABRIC (CLASS 8)	CONCRETE BACKFILL (PIPE TRENCH)			
			LF	LF	LF	EA	EA	LB	EA	CY	TON	SQYD	EA	CY	SQYD	CY			
D-1	1																D-1	1	
		a					1												a
		b					1												b
		c			45											5			c
		d	50																d
D-2	2																D-2	2	
		a			52														a
		b					1												b
		c					1												d
		d	38																c
D-3,4,5	3																D-3,4,5	3	
		a								1.17									a
		b						263	1										b
		c									3	16	1						c
		d		398															d
		e								1.62									e
		f						263	1										f
		g									3	16	1						g
		h		259															h
		i				1													i
		j												5					j
		k													20				k
TOTAL			88	657	97	1	4	526	2	2.79	6	32	2	5	20	5			

(N) - NOT A SEPARATE PAY ITEM, FOR INFORMATION ONLY.

* TOTAL QUANTITIES INCLUDED IN ROADWAY QUANTITIES ON Q-1.

APC ALLOWABLE PIPE MATERIALS

DESCRIPTION	TYPE		
	RCP CLASS IV	HDPE (TYPE S) **	SSRP (0.109" THICK)
	SIZE	SIZE	SIZE
18" APC	18"	18"	18"
24" APC	24"	24"	24"

** HDPE = HIGH DENSITY POLYETHYLENE CORRUGATED PIPE, SMOOTH INTERIOR.

ALL CULVERT JOINTS SHALL BE STANDARD JOINTS.

MARKER (CULVERT)

DRAINAGE SYSTEM No.	MARKER (CULVERT)	LOCATION
	EA	
1	1	Rt "Q1" 62+40
2	1	Rt "Q1" 66+80
3	2	Lt "Q1" 63+50, Lt "Q1" 66+50
TOTAL	4	

DRAINAGE INLET MARKERS

DRAINAGE SYSTEM No.	MARKER (INLET)	LOCATION
	EA	
3	2	Lt "Q1" 63+50, Lt "Q1" 66+50
TOTAL	2	

DRAINAGE QUANTITIES

NO SCALE

DQ-1

STATE OF CALIFORNIA - DEPARTMENT OF TRANSPORTATION
Caltrans
TRAFFIC

FUNCTIONAL SUPERVISOR: STEPHEN T. WRIGHT
CALCULATED-DESIGNED BY: A.G. CHIN
CHECKED BY: CAROL MESMAN
REVISED BY
DATE REVISED

LAST REVISION 06-30-14
DATE PLOTTED => 14-NOV-2014
TIME PLOTTED => 14:57

Dist	COUNTY	ROUTE	POST MILES TOTAL PROJECT	SHEET No.	TOTAL SHEETS
03	BUT	99	40.5/40.8	23	76

Russell F. Petty 10-13-14
REGISTERED CIVIL ENGINEER DATE

10-13-14
PLANS APPROVAL DATE

REGISTERED PROFESSIONAL ENGINEER
RUSSELL F. PETTY
No. 72008
Exp. 06/30/16
CIVIL
STATE OF CALIFORNIA

THE STATE OF CALIFORNIA OR ITS OFFICERS OR AGENTS SHALL NOT BE RESPONSIBLE FOR THE ACCURACY OR COMPLETENESS OF SCANNED COPIES OF THIS PLAN SHEET.

NOTES:

1. FOR ACCURATE RIGHT OF WAY DATA, CONTACT RIGHT OF WAY ENGINEERING AT THE DISTRICT OFFICE.
2. NOT ALL UTILITIES OUTSIDE THE STATE RIGHT OF WAY ARE SHOWN.

ABBREVIATIONS:

PH - POTHOLE
KV - KILOVOLT

LEGEND:

POTHOLE LOCATION
UTILITY POLE

UTILITY - OWNERSHIP

ELECTRIC OVERHEAD - PACIFIC GAS AND ELECTRIC (PG&E)
ELECTRIC UNDERGROUND - PACIFIC GAS AND ELECTRIC (PG&E)
FIBER OPTIC OVERHEAD - AMERICAN TELEPHONE AND TELEGRAPH (AT&T)
TELEPHONE OVERHEAD - AMERICAN TELEPHONE AND TELEGRAPH (AT&T)

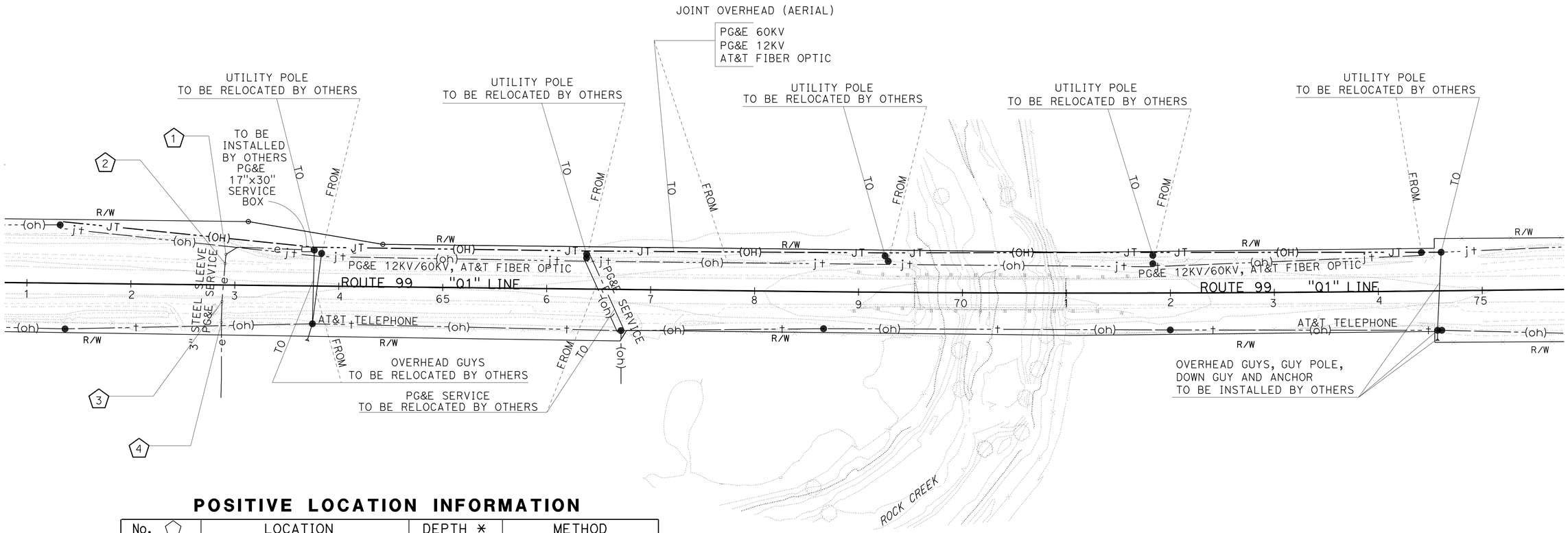

POSITIVE LOCATION INFORMATION

No. ⬠	LOCATION	DEPTH *	METHOD
1	29.5' Lt "Q1" 62+91.1	45"	POTHOLING
2	20.7' Lt "Q1" 62+90.5	42"	POTHOLING
3	16.0' Rt "Q1" 62+87.8	49"	POTHOLING
4	36.1' Rt "Q1" 62+87.5	33"	POTHOLING

* DEPTH IS DISTANCE FROM OG TO TOP OF PIPE

THIS PLAN FOR UTILITY INFORMATION ONLY

UTILITY PLAN

SCALE: 1" = 50'

U-1

STATE OF CALIFORNIA - DEPARTMENT OF TRANSPORTATION
NORTH REGION
DIVISION OF ENGINEERING
Caltrans

FUNCTIONAL SUPERVISOR: CHARLES W. LAUGHLIN
CALCULATED-DESIGNED BY: RUSSELL F. PETTY
CHECKED BY: DANIEL R. RECHS
REVISED BY
DATE REVISED

LAST REVISION: DATE PLOTTED => 14-NOV-2014 TIME PLOTTED => 14:46
06-17-14

Dist	COUNTY	ROUTE	POST MILES TOTAL PROJECT	SHEET No.	TOTAL SHEETS
03	But	99	40.5/40.8	24	76

Kris M. Albers 10-13-14
REGISTERED CIVIL ENGINEER DATE

10-13-14
PLANS APPROVAL DATE

REGISTERED PROFESSIONAL ENGINEER
KRIS M. ALBERS
No. 49986
Exp. 6-30-15
CIVIL
STATE OF CALIFORNIA

THE STATE OF CALIFORNIA OR ITS OFFICERS OR AGENTS SHALL NOT BE RESPONSIBLE FOR THE ACCURACY OR COMPLETENESS OF SCANNED COPIES OF THIS PLAN SHEET.

STATIONARY MOUNTED CONSTRUCTION AREA SIGNS

SIGN LETTER	SIGN CODE FEDERAL	SIGN CODE CALIFORNIA	PANEL SIZE	SIGN MESSAGE	NUMBER OF POST AND SIZE	NUMBER OF SIGNS
A	W20-1	C23	48" x 48"	ROAD WORK AHEAD	1 - 6" x 6"	3
B		C40(Mod)	48" x 36"	TRAFFIC FINES DOUBLED IN WORK ZONES	1 - 4" x 4"	2
C	G20-2	C14	36" x 18"	END ROAD WORK	1 - 4" x 4"	2

NOTE:

EXACT SIGN LOCATION TO BE DETERMINED BY THE ENGINEER.

LEGEND

(X) CONSTRUCTION AREA SIGN LETTER

SIGN DETAILS

(B) C40(Mod)<CA>

TRAFFIC FINES
DOUBLED IN
WORK ZONES

4" D SERIES LETTERS

48"x36"

RETROREFLECTIVE WHITE BACKGROUND WITH BLACK LEGEND AND BORDER.

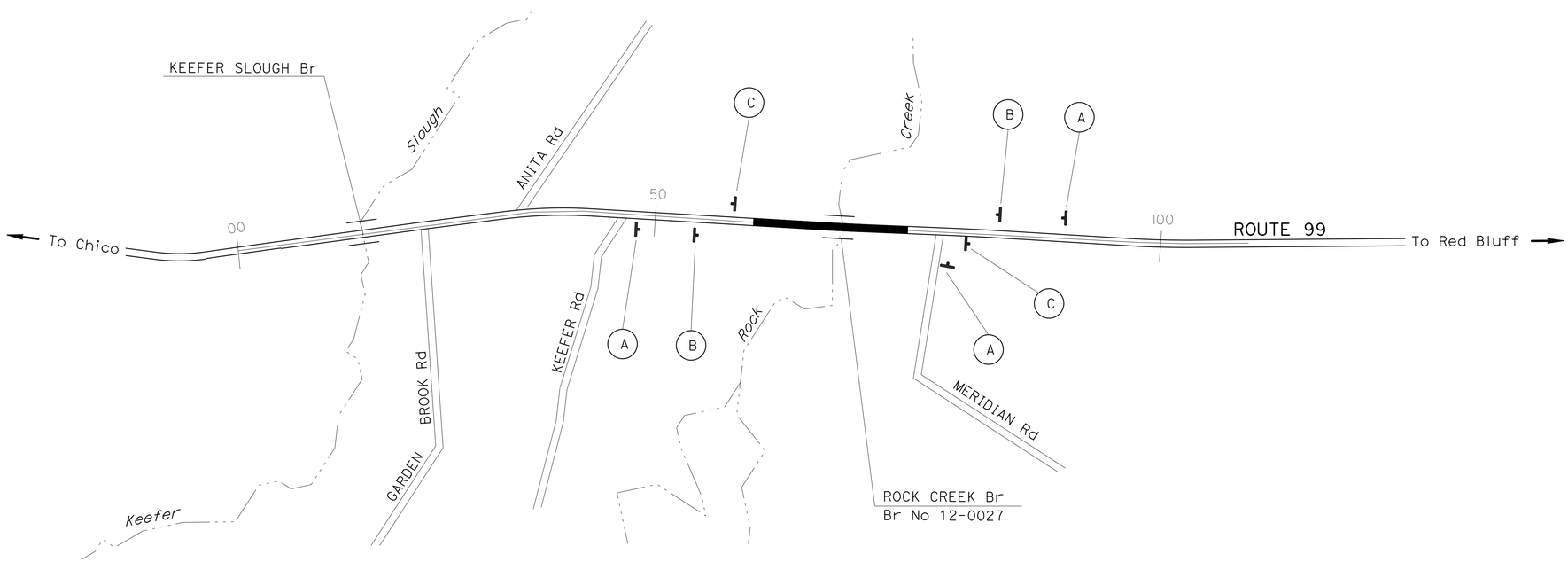

CONSTRUCTION AREA SIGNS

NO SCALE

CS-1

APPROVED FOR CONSTRUCTION AREA SIGN WORK ONLY

STATE OF CALIFORNIA - DEPARTMENT OF TRANSPORTATION
Caltrans
TRAFFIC

FUNCTIONAL SUPERVISOR: SERGIO ACEVES
CALCULATED-DESIGNED BY: CHUCK COOK
CHECKED BY: KRIS ALBERS
REVISED BY
DATE REVISED

LAST REVISION 05-19-14
DATE PLOTTED => 14-NOV-2014
TIME PLOTTED => 14:46

Dist	COUNTY	ROUTE	POST MILES TOTAL PROJECT	SHEET No.	TOTAL SHEETS
03	But	99	40.5/40.8	25	76

REGISTERED CIVIL ENGINEER 10-13-14 DATE

10-13-14
PLANS APPROVAL DATE

REGISTERED PROFESSIONAL ENGINEER ERIC NORMAN SOUZA No. 75706 Exp. 06-30-16 CIVIL STATE OF CALIFORNIA

THE STATE OF CALIFORNIA OR ITS OFFICERS OR AGENTS SHALL NOT BE RESPONSIBLE FOR THE ACCURACY OR COMPLETENESS OF SCANNED COPIES OF THIS PLAN SHEET.

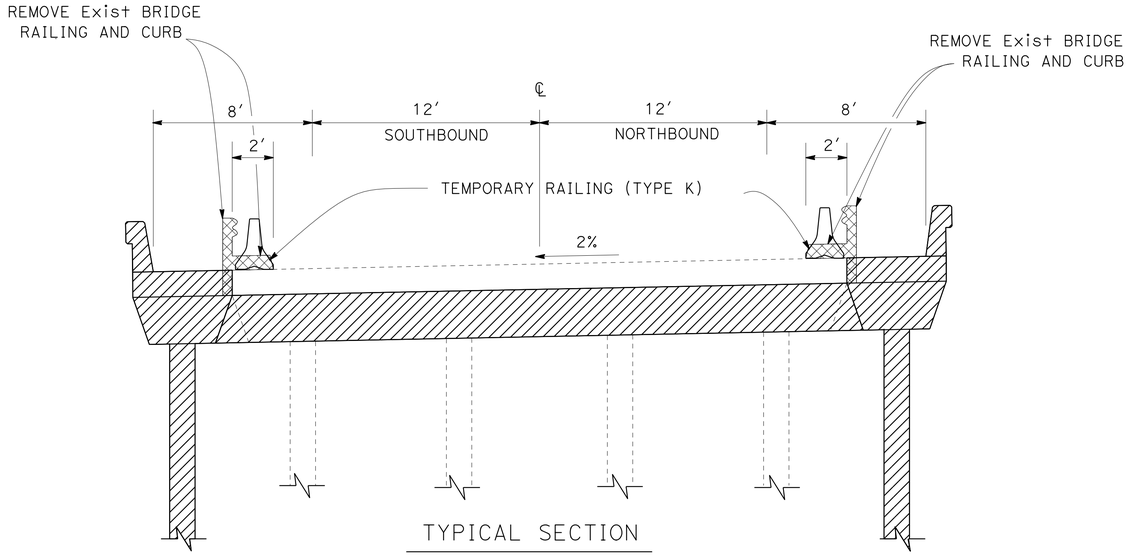

TYPICAL SECTION

NO SCALE

LEGEND

BRIDGE WIDENING

REMOVE EXISTING BRIDGE RAILING AND CURB

STAGE 1

1. NORTHBOUND AND SOUTHBOUND ROUTE 99 (EAST AND WEST SIDE OF Br No. 12-0027) REMOVE EXISTING BRIDGE RAILING AND CURB AND MBGR.
2. PLACE TEMPORARY RAILING (TYPE K), CHANNELIZERS AND ALTERNATIVE TEMPORARY CRASH CUSHION. AFTER REMOVAL OF Exist BRIDGE RAILING AND CURB, TRAFFIC SHALL NEVER BE ON THE BRIDGE WITHOUT AN APPROPRIATE TRAFFIC CONTROL SYSTEM OR PLACEMENT OF TEMPORARY RAILING (TYPE K) PER PLAN.
3. CONSTRUCT BRIDGE WIDENING ON BOTH NORTHBOUND AND SOUTHBOUND OF ROCK CREEK BRIDGE (SEE BRIDGE PLANS FOR DETAILS).

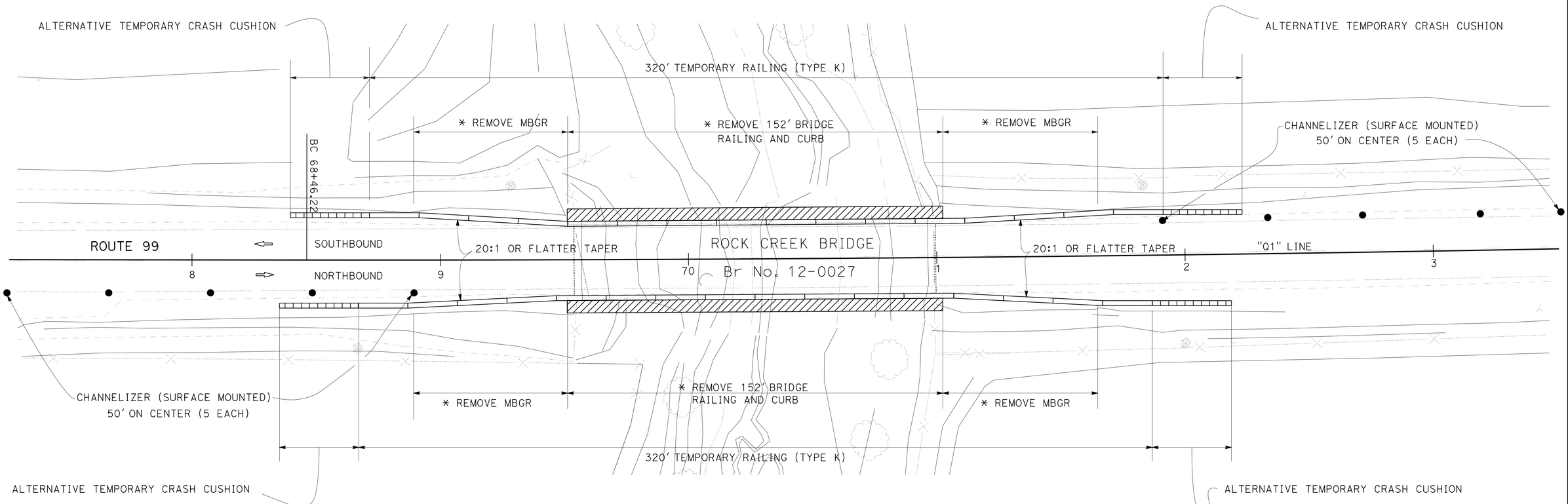

* SEE CONSTRUCTION DETAILS AND BRIDGE PLANS FOR DETAILS OF Exist BRIDGE RAILING AND CURB.

PLAN

SCALE: 1"=20′

STAGE 1

STAGE CONSTRUCTION

Br No. 12-0027

SCALE AS SHOWN

SC-1

REVISED BY | DATE REVISED

A.G. CHIN | CAROL MESMAN

CALCULATED-DESIGNED BY | CHECKED BY

FUNCTIONAL SUPERVISOR: STEPHEN WRIGHT

STATE OF CALIFORNIA - DEPARTMENT OF TRANSPORTATION

Caltrans® **TRAFFIC**

LAST REVISION 06-30-14 | DATE PLOTTED => 14-NOV-2014 | TIME PLOTTED => 14:46

Dist	COUNTY	ROUTE	POST MILES TOTAL PROJECT	SHEET No.	TOTAL SHEETS
03	But	99	40.5/40.8	26	76

REGISTERED CIVIL ENGINEER 10-13-14 DATE

PLANS APPROVAL DATE 10-13-14

REGISTERED PROFESSIONAL ENGINEER ERIC NORMAN SOUZA No. 75706 Exp. 06-30-16 CIVIL STATE OF CALIFORNIA

THE STATE OF CALIFORNIA OR ITS OFFICERS OR AGENTS SHALL NOT BE RESPONSIBLE FOR THE ACCURACY OR COMPLETENESS OF SCANNED COPIES OF THIS PLAN SHEET.

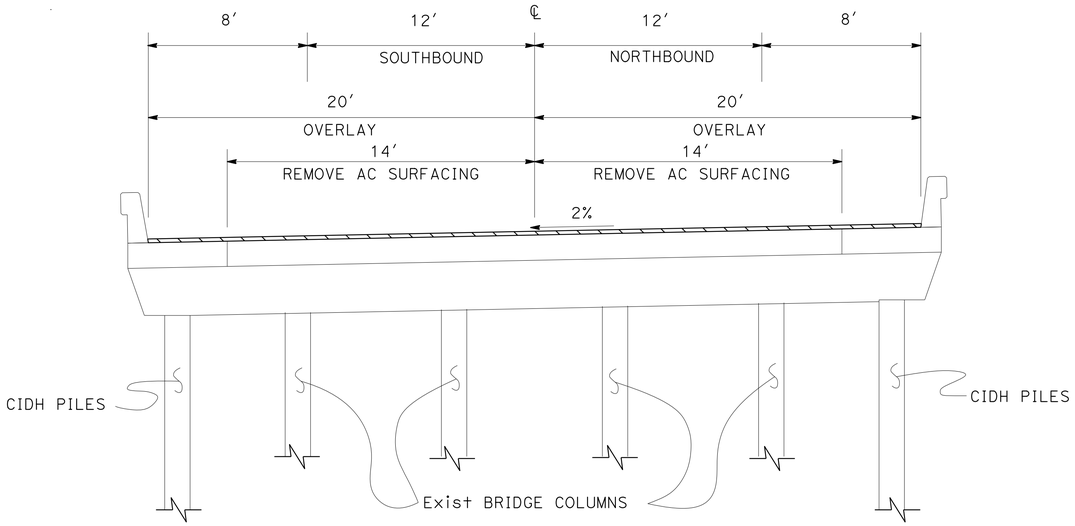

TYPICAL SECTION

NO SCALE

LEGEND

POLYESTER CONCRETE OVERLAY

STAGE 2

1. CONSTRUCT ROADWAY WIDENING, APPROACH SLAB (SEE BRIDGE PLANS FOR DETAILS), COLD PLANE AC PAVEMENT, AND PLACE HMA.
2. REMOVE TEMPORARY RAILING (TYPE K) AND CONSTRUCT MGS SYSTEMS AND END TREATMENTS.
3. REMOVE EXISTING AC SURFACING FROM BRIDGE DECK, PLUG EXISTING DECK DRAINS, PLACE POLYESTER CONCRETE AND OVERLAY BRIDGE DECK (SEE BRIDGE PLANS FOR DETAILS).
4. REMOVE Exist BRIDGE COLUMNS AND FOOTINGS, SEE BRIDGE PLANS FOR DETAILS.

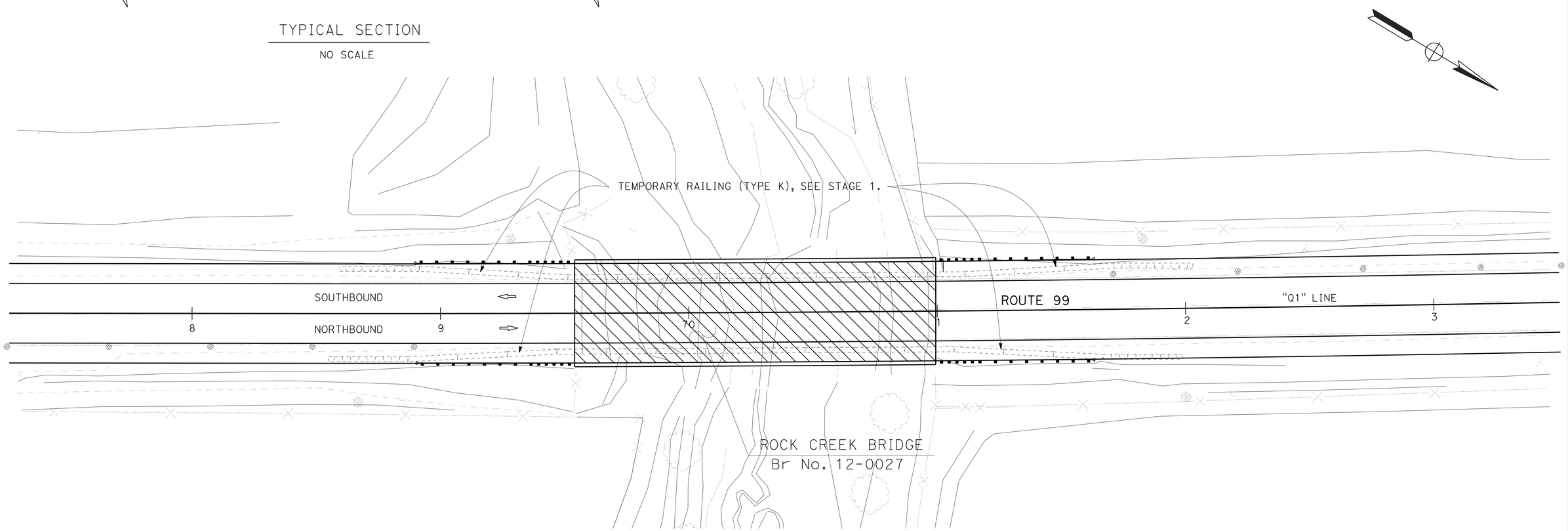

PLAN

SCALE: 1"=20′

STAGE 2

STAGE CONSTRUCTION

Br No. 12-0027

SCALE AS SHOWN

SC-2

STATE OF CALIFORNIA - DEPARTMENT OF TRANSPORTATION

Caltrans

TRAFFIC

FUNCTIONAL SUPERVISOR: STEPHEN WRIGHT

CALCULATED-DESIGNED BY: A.G. CHIN

CHECKED BY: CAROL MESMAN

REVISED BY

DATE REVISED

LAST REVISION 06-30-14

DATE PLOTTED => 14-NOV-2014

TIME PLOTTED => 14:46

Dist	COUNTY	ROUTE	POST MILES TOTAL PROJECT	SHEET No.	TOTAL SHEETS
03	But	99	40.5/40.8	27	76

Kris M. Albers 10-13-14
REGISTERED CIVIL ENGINEER DATE

10-13-14
PLANS APPROVAL DATE

REGISTERED PROFESSIONAL ENGINEER
KRIS M. ALBERS
No. 49986
Exp. 6-30-15
CIVIL
STATE OF CALIFORNIA

THE STATE OF CALIFORNIA OR ITS OFFICERS OR AGENTS SHALL NOT BE RESPONSIBLE FOR THE ACCURACY OR COMPLETENESS OF SCANNED COPIES OF THIS PLAN SHEET.

LEGEND

- LIMIT OF STRIPING PATTERN
- CHANGE IN STRIPING PATTERN
- (No.) PAVEMENT DELINEATION DETAIL NUMBER
- DELINEATOR (CLASS 1)
- HP HIGHWAY POST MARKER
- s= DELINEATOR SPACING
- (Sht-No.) ROADSIDE SIGN NUMBER
- <CA> CALIFORNIA SIGN CODE
- ■ REMOVE ROADSIDE SIGN

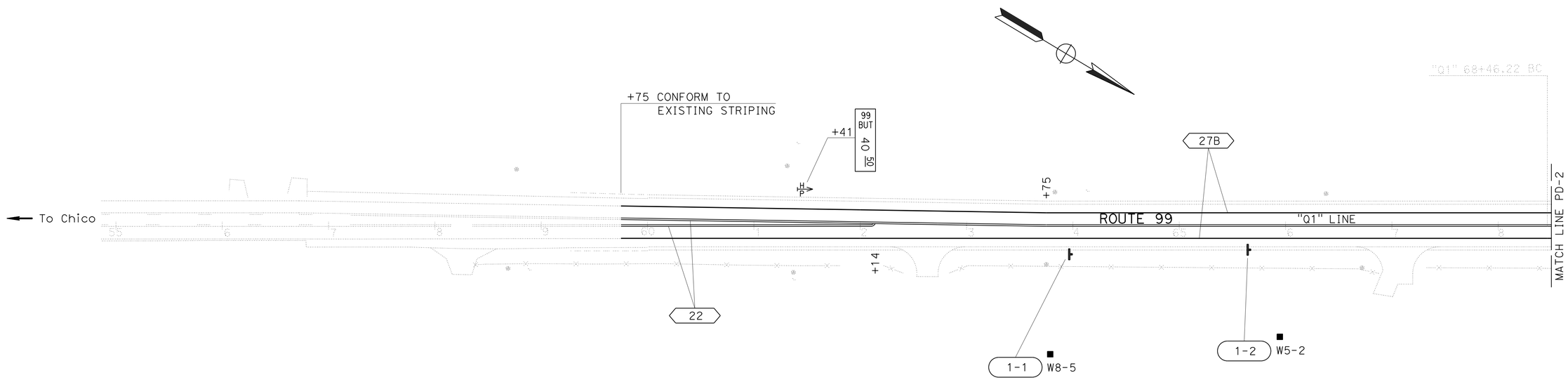

NOTES:

1. ALL LANES SHALL BE 12' WIDE UNLESS OTHERWISE SHOWN.
2. ALL SIGN CODES SHOWN ARE FEDERAL SIGN CODES UNLESS OTHERWISE DESIGNATED AS CALIFORNIA SIGN CODES.
3. ALL EXISTING SIGNS NOT SHOWN FOR REMOVAL SHALL REMAIN IN PLACE.

PAVEMENT DELINEATION AND SIGN PLAN

SCALE: 1"=50'

PD-1

APPROVED FOR PAVEMENT DELINEATION AND SIGN WORK ONLY

STATE OF CALIFORNIA - DEPARTMENT OF TRANSPORTATION
Caltrans
TRAFFIC

FUNCTIONAL SUPERVISOR: SERGIO ACEVES
CALCULATED-DESIGNED BY: CHUCK COOK
CHECKED BY: KRIS ALBERS
REVISED BY
DATE REVISED

LAST REVISION 08-13-14
DATE PLOTTED => 14-NOV-2014
TIME PLOTTED => 14:46

Dist	COUNTY	ROUTE	POST MILES TOTAL PROJECT	SHEET No.	TOTAL SHEETS
03	But	99	40.5/40.8	28	76

Kris M. Albers 10-13-14
REGISTERED CIVIL ENGINEER DATE

10-13-14
PLANS APPROVAL DATE

REGISTERED PROFESSIONAL ENGINEER
KRIS M. ALBERS
No. 49986
Exp. 6-30-15
CIVIL
STATE OF CALIFORNIA

THE STATE OF CALIFORNIA OR ITS OFFICERS OR AGENTS SHALL NOT BE RESPONSIBLE FOR THE ACCURACY OR COMPLETENESS OF SCANNED COPIES OF THIS PLAN SHEET.

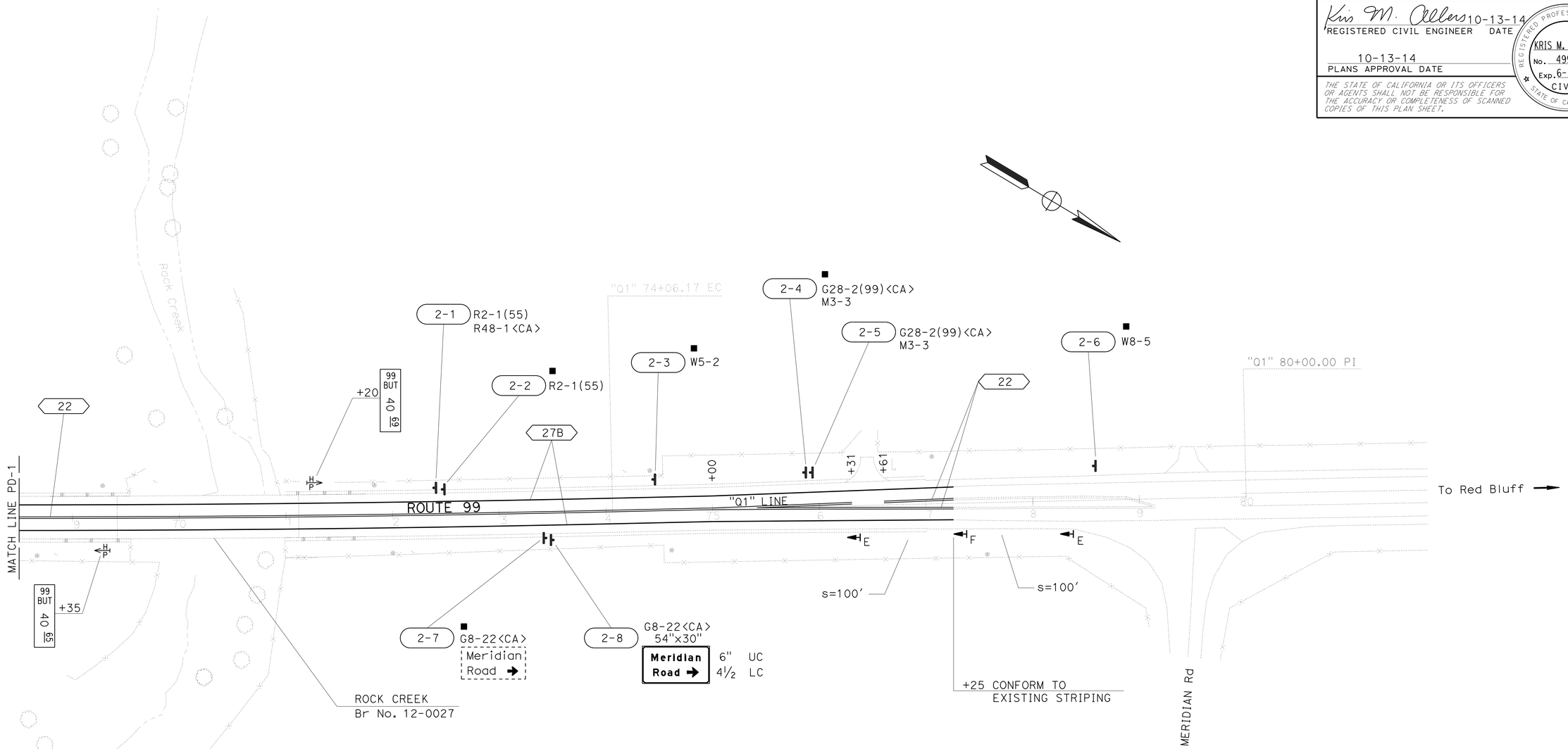

PAVEMENT DELINEATION AND SIGN PLAN

SCALE: 1"=50'

PD-2

APPROVED FOR PAVEMENT DELINEATION AND SIGN WORK ONLY

STATE OF CALIFORNIA - DEPARTMENT OF TRANSPORTATION
Caltrans
TRAFFIC

FUNCTIONAL SUPERVISOR: SERGIO ACEVES
CALCULATED-DESIGNED BY: CHUCK COOK
CHECKED BY: KRIS ALBERS
REVISED BY
DATE REVISED

LAST REVISION 08-26-14
DATE PLOTTED => 14-NOV-2014
TIME PLOTTED => 14:46

Dist	COUNTY	ROUTE	POST MILES TOTAL PROJECT	SHEET No.	TOTAL SHEETS
03	But	99	40.5/40.8	29	76

Kris M. Albers 10-13-14
REGISTERED CIVIL ENGINEER DATE

10-13-14
PLANS APPROVAL DATE

REGISTERED PROFESSIONAL ENGINEER
KRIS M. ALBERS
No. 49986
Exp. 6-30-15
CIVIL
STATE OF CALIFORNIA

THE STATE OF CALIFORNIA OR ITS OFFICERS OR AGENTS SHALL NOT BE RESPONSIBLE FOR THE ACCURACY OR COMPLETENESS OF SCANNED COPIES OF THIS PLAN SHEET.

LEGEND

TYPE D TWO-WAY YELLOW PAVEMENT MARKER (RETROREFLECTIVE)

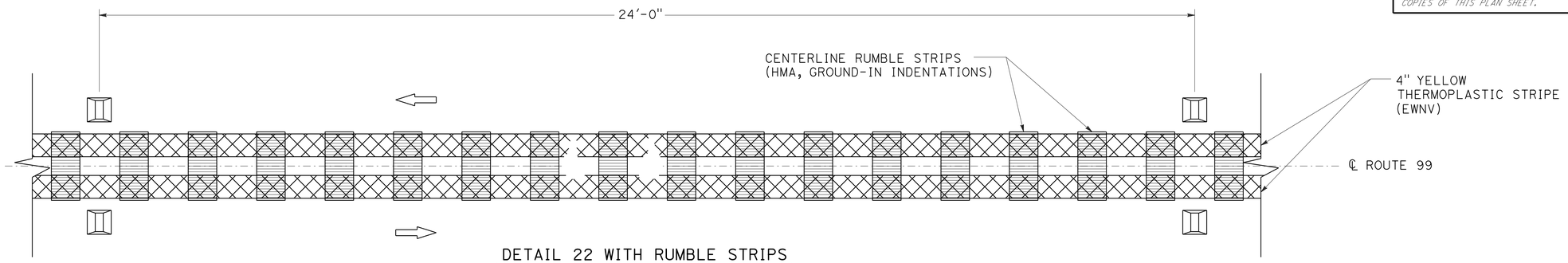

DETAIL 22 WITH RUMBLE STRIPS
(TYPICAL)

4" THERMOPLASTIC TRAFFIC STRIPE (EWNV)

DETAIL NUMBER	LF
22	4,368
27B	3,500
TOTAL	7,868

PAVEMENT MARKER

DETAIL NUMBER	RETROREFLECTIVE TYPE D EACH
22	184
TOTAL	184

DELINEATOR - HIGHWAY POST MARKER

SHEET NUMBER	DELINEATOR (CLASS 1) TYPE E EACH	DELINEATOR (CLASS 1) TYPE F EACH	HIGHWAY POST MARKER EACH
PD-1			1
PD-2	2	1	2
SUBTOTAL	2	1	3
TOTAL	3		3

EWNV = ENHANCED WET NIGHT VISIBILITY

PAVEMENT DELINEATION DETAILS AND QUANTITIES

PDQ-1

STATE OF CALIFORNIA - DEPARTMENT OF TRANSPORTATION
Caltrans
TRAFFIC

FUNCTIONAL SUPERVISOR: SERGIO ACEVES
CALCULATED-DESIGNED BY: CHUCK COOK
CHECKED BY: KRIS ALBERS
REVISED BY
DATE REVISED

LAST REVISION 08-26-14
DATE PLOTTED => 14-NOV-2014
TIME PLOTTED => 14:46

Dist	COUNTY	ROUTE	POST MILES TOTAL PROJECT	SHEET No.	TOTAL SHEETS
03	But	99	40.5/40.8	30	76

Kris M. Albers 10-13-14
REGISTERED CIVIL ENGINEER DATE

10-13-14
PLANS APPROVAL DATE

REGISTERED PROFESSIONAL ENGINEER
KRIS M. ALBERS
No. 49986
Exp. 6-30-15
CIVIL
STATE OF CALIFORNIA

THE STATE OF CALIFORNIA OR ITS OFFICERS OR AGENTS SHALL NOT BE RESPONSIBLE FOR THE ACCURACY OR COMPLETENESS OF SCANNED COPIES OF THIS PLAN SHEET.

NOTES:

1. THE SIGN POST SHALL HAVE 7/16" DIAMETER PERFORATIONS 1" ON CENTER ON ALL FOUR SIDES FOR THE FULL LENGTH.
2. USE TWO DRIVE RIVETS TO FASTEN ASSEMBLED SIGN AND SIGN POST INTO ANCHOR SLEEVE. INSTALL DRIVE RIVETS INTO THE SIDES FACING TRAFFIC.
3. ALL METAL SIGN POSTS AND ANCHOR SLEEVES SHALL BE GALVANIZED.
4. ALL ANCHOR SLEEVES SHALL BE EMBEDDED IN PCC.
5. BALANCED SINGLE POST INSTALLATIONS OF SINGLE SHEET ALUMINUM PANEL SIGNS REQUIRE BACK BRACES WHEN 2'-10" OR MORE IN LENGTH.
6. WOOD BLOCK SPACERS ARE NOT REQUIRED FOR SIGNS MOUNTED ON METAL POSTS.
7. ATTACH RECTANGULAR SIGN PANEL TO SIGN POST WITH BOLTS AT TOP AND BOTTOM. CENTER MAY BE ATTACHED WITH EITHER BOLT OR 3/8" DRIVE RIVET.
8. ATTACH DIAMOND SIGN PANEL TO SIGN POST WITH BOLT AT CENTER. TOP AND BOTTOM MAY BE ATTACHED WITH EITHER BOLTS OR 3/8" DRIVE RIVETS.
9. FOR DETAILS NOT SHOWN, SEE STANDARD PLANS RS1 AND RS2.

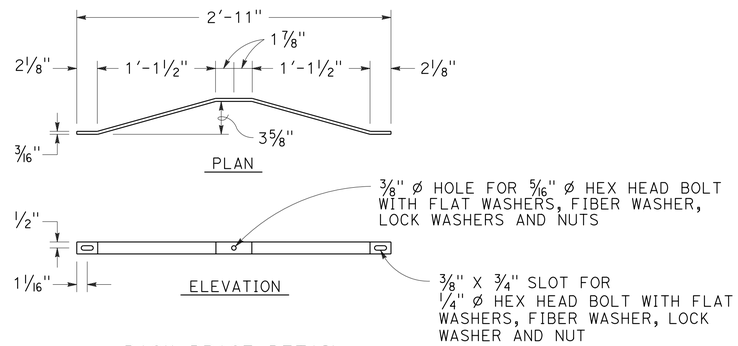

BACK BRACE DETAIL
SEE NOTE 5

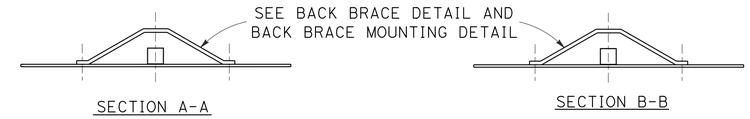

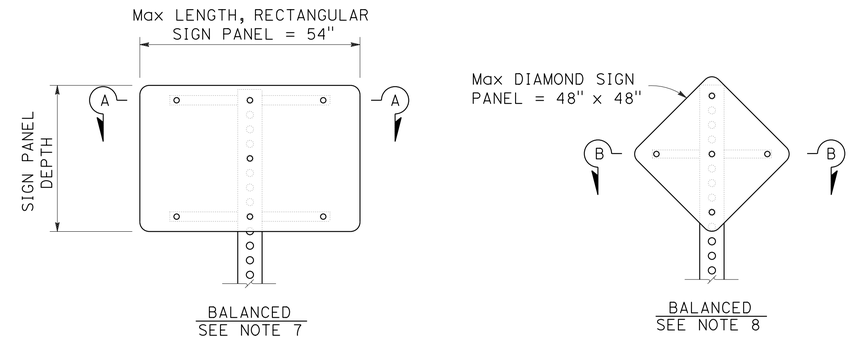

SINGLE POST INSTALLATION

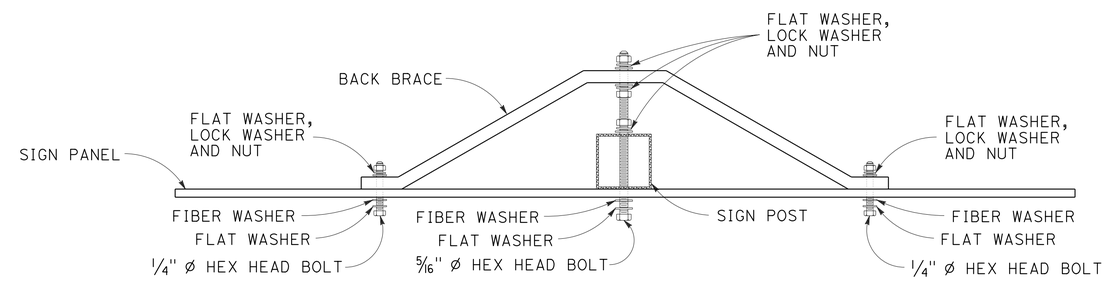

BACK BRACE MOUNTING DETAIL
SEE NOTES 6, 7 AND 8

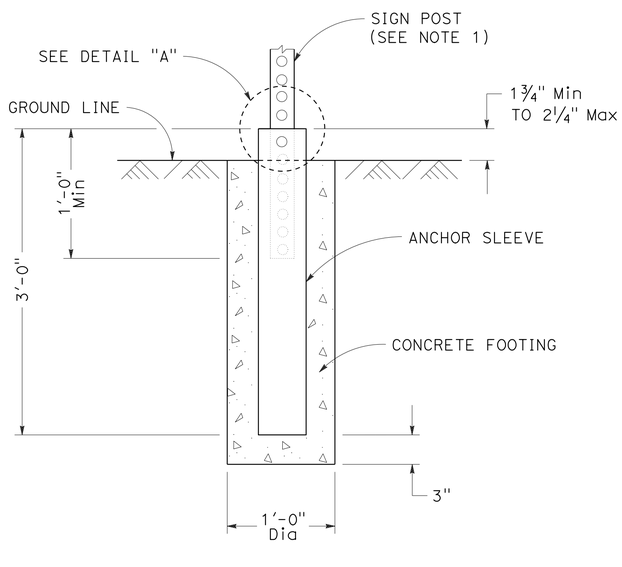

ANCHOR SLEEVE DETAIL

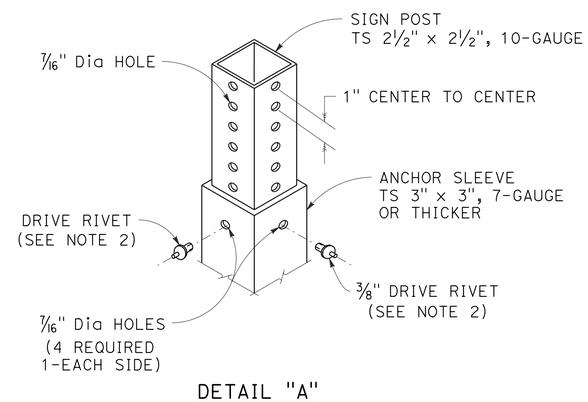

DETAIL "A"

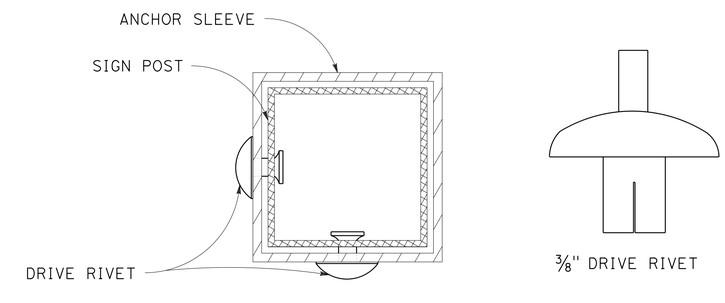

FASTENER DETAIL

SIGN DETAILS

NO SCALE

SD-1

STATE OF CALIFORNIA - DEPARTMENT OF TRANSPORTATION
Caltrans®
TRAFFIC

FUNCTIONAL SUPERVISOR: SERGIO ACEVES
CALCULATED-DESIGNED BY: KRIS ALBERS
CHECKED BY: CHUCK COOK
REVISED BY
DATE REVISED

LAST REVISION 08-18-14
DATE PLOTTED => 14-NOV-2014
TIME PLOTTED => 14:46

Dist	COUNTY	ROUTE	POST MILES TOTAL PROJECT	SHEET No.	TOTAL SHEETS
03	But	99	40.5/40.8	31	76

Kris M. Albers 10-13-14
REGISTERED CIVIL ENGINEER DATE

10-13-14
PLANS APPROVAL DATE

REGISTERED PROFESSIONAL ENGINEER
KRIS M. ALBERS
No. 49986
Exp. 6-30-15
CIVIL
STATE OF CALIFORNIA

THE STATE OF CALIFORNIA OR ITS OFFICERS OR AGENTS SHALL NOT BE RESPONSIBLE FOR THE ACCURACY OR COMPLETENESS OF SCANNED COPIES OF THIS PLAN SHEET.

ROADSIDE SIGN QUANTITIES

SIGN NUMBER (SHT-NO.)	SIGN CODE FEDERAL	SIGN CODE CALIFORNIA	PANEL SIZE INCHES	"C" DIM IN FEET	POST SIZE AND LENGTH METAL POST 2½"X2½"	ROADSIDE SIGN ONE POST EA	REMOVE ROADSIDE SIGN EA
1-1	W8-5						1
1-2	W5-2						1
2-1	R2-1(55)	R48-1	36 x 48 36 x 18	5	12′	1	
2-2	R2-1(55)						1
2-3	W5-2						1
2-4	M3-3	G28-2(99)					1
2-5	M3-3	G28-2(99)	24 x 25 24 x 12	4	10′	1	
2-6	W8-5						1
2-7		G8-22					1
2-8		G8-22	54 x 30	5	10′	1	
TOTAL						3	7

NOTES:

1. EXACT LOCATION AND POSITION OF ROADSIDE SIGNS TO BE DETERMINED BY THE ENGINEER.
2. POST LENGTHS GIVEN ARE APPROXIMATE.
3. "C" DIM = VERTICAL CLEARANCE EP TO BOTTOM OF SIGN PANEL.

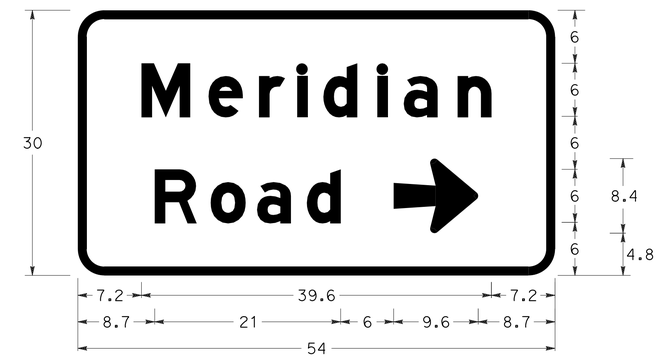

1" BORDER WITH 3" RADIUS
"Meridian" E Mod
"Road" E Mod
ARROW - 6"UC-1 LINE - 9.6" 0°

G8-22<CA>
2-8

NOTE:
ALL SIGN DIMENSIONS ARE IN INCHES.

ROADSIDE SIGN PANEL QUANTITIES

SIGN CODE FEDERAL	SIGN CODE CALIFORNIA	SIGN MESSAGE/DESCRIPTION	PANEL SIZE L x D INCHES	PANEL AREA SQFT	NUMBER OF PANELS	BACKGROUND SHEETING COLOR	BACKGROUND RETROREFLECTIVE ASTM TYPE	LEGEND SHEETING COLOR	LEGEND RETROREFLECTIVE ASTM TYPE	PROTECTIVE OVERLAY PREMIUM	FURNISH SINGLE SHEET ALUMINUM SIGN UNFRAMED 0.063" SQFT	FURNISH SINGLE SHEET ALUMINUM SIGN UNFRAMED 0.080" SQFT
R2-1(55)		SPEED LIMIT 55	36 x 48	12.00	1	WHITE	III	BLACK		X	12.00	
	R48-1	RADAR ENFORCED	36 x 18	4.50	1	WHITE	III	BLACK		X	4.50	
	G8-22	SIGN 2-8, SEE DETAIL	54 x 30	11.25	1	GREEN	IV	WHITE	IX	X		11.25
	G28-2(99)	CALIFORNIA 99 (ROUTE MARKER)	24 x 25	4.17	1	GREEN	III	WHITE	III	X	4.17	
M3-3		SOUTH	24 x 12	2.00	1	GREEN	III	WHITE	III	X	2.00	
TOTAL											22.67	11.25

L = LENGTH OF PANEL
D = DEPTH OF PANEL

SIGN DETAILS AND QUANTITIES

NO SCALE

SD-2

STATE OF CALIFORNIA - DEPARTMENT OF TRANSPORTATION
Caltrans®
TRAFFIC

FUNCTIONAL SUPERVISOR: SERGIO ACEVES
CALCULATED-DESIGNED BY: CHUCK COOK
CHECKED BY: KRIS ALBERS
REVISED BY
DATE REVISED

LAST REVISION 08-13-14
DATE PLOTTED => 14-NOV-2014
TIME PLOTTED => 14:46

Dist	COUNTY	ROUTE	POST MILES TOTAL PROJECT	SHEET No.	TOTAL SHEETS
03	But	99	40.5/40.8	32	76

REGISTERED CIVIL ENGINEER 10-13-14 DATE

10-13-14
PLANS APPROVAL DATE

REGISTERED PROFESSIONAL ENGINEER ERIC NORMAN SOUZA No. 75706 Exp. 06-30-16 CIVIL STATE OF CALIFORNIA

THE STATE OF CALIFORNIA OR ITS OFFICERS OR AGENTS SHALL NOT BE RESPONSIBLE FOR THE ACCURACY OR COMPLETENESS OF SCANNED COPIES OF THIS PLAN SHEET.

ROADWAY QUANTITIES

STATION	ROADWAY EXCAVATION			EMBANKMENT (N)		HOT MIX ASPHALT (TYPE A)										COLD PLANE AC PAVEMENT			CLASS 2 AB			MINOR CONCRETE (DRIVEWAY)	REMOVE CONCRETE	PLACE HMA (Misc AREA)	PLACE HMA DIKE (TYPE F)	ROCK SLOPE PROTECTION (No. 2, METHOD B)	ROCK SLOPE PROTECTION FABRIC (CLASS 8)	TACK COAT	CRACK TREATMENT
	MAINLINE	DRIVEWAY #1	DRIVEWAY #2	MAINLINE	DRIVEWAY #2	SHOULDER WIDENING	OVERLAY	0.55' COLD PLANE	0.10' COLD PLANE	DRIVEWAY #1	DRIVEWAY #2	DRIVEWAY #3	HMA APRON	OVERSIDE DRAIN	HMA DIKE (TYPE F)	(0.10' Max)	(0.25' Max)	(0.55' Max)	MAINLINE	DRIVEWAY #1	DRIVEWAY #2								
	CY					TON										SQYD			CY			CY	CY	SQYD	LF	CY	SQYD	TON	LNMI
"Q1" 60+00.00 TO "Q1" 69+42.00	1,418			1,013		1,300													1,339									4	0.4
"Q1" 71+12.00 TO "Q1" 77+00.00	757			515		800													861									2	0.3
"Q1" 59+75.00 TO "Q1" 63+25.00								380										942											
"Q1" 63+25.00 TO "Q1" 68+75.00							1,883		110							1,600													
"Q1" 68+75.00 TO "Q1" 69+42.00								85										210											
"Q1" 71+12.00 TO "Q1" 71+75.00								85										201											
"Q1" 71+75.00 TO "Q1" 75+50.00							917		75							1,000													
"Q1" 75+50.00 TO "Q1" 77+25.00								190										467											
R+ "Q1" 62+63		25								20										20									
R+ "Q1" 67+07			5		100						30										30	4.4	5						
L+ "Q1" 76+40												17					92												
FROM SHEET DQ-1													6											32		5	20		
L+ "Q1" 68+66														3.5	0.5									7	75	2	80		
L+ "Q1" 71+49														2.5	0.5									4	27	2	80		
SUBTOTAL	2,175	25	5	1,528	100	2,100	2,800	740	185	20	30	17	6	6	1	2,600	92	1,820	2,200	20	30	4.4	5	43	102	9	180	6	0.7
TOTAL	2,205			1,628		5,905										4,512			2,250			4.4	5	43	102	9	180	6	0.7

(N) NOT A SEPARATE PAY ITEM, FOR INFORMATION ONLY.

SUMMARY OF QUANTITIES

Q-1

REVISED BY | DATE REVISED
A.G. CHIN | CAROL MESMAN
CALCULATED-DESIGNED BY | CHECKED BY
FUNCTIONAL SUPERVISOR: STEPHEN T. WRIGHT

STATE OF CALIFORNIA - DEPARTMENT OF TRANSPORTATION
Caltrans
TRAFFIC

LAST REVISION 10-30-14 | DATE PLOTTED => 14-NOV-2014 | TIME PLOTTED => 14:46

Dist	COUNTY	ROUTE	POST MILES TOTAL PROJECT	SHEET No.	TOTAL SHEETS
03	But	99	40.5/40.8	33	76

REGISTERED CIVIL ENGINEER 10-13-14 DATE

PLANS APPROVAL DATE 10-13-14

REGISTERED PROFESSIONAL ENGINEER ERIC NORMAN SOUZA No. 75706 Exp. 06-30-16 CIVIL STATE OF CALIFORNIA

THE STATE OF CALIFORNIA OR ITS OFFICERS OR AGENTS SHALL NOT BE RESPONSIBLE FOR THE ACCURACY OR COMPLETENESS OF SCANNED COPIES OF THIS PLAN SHEET.

ABBREVIATIONS

EAA - END ANCHOR ASSEMBLY
AILTS - ALTERNATIVE IN-LINE TERMINAL SYSTEM

MGS QUANTITIES

LOCATION	MGS	TRANSITION RAILING (TYPE WB-31)	AILTS	EAA (TYPE SFT)	END CAP (3/4 WRAP END SECTION)	REMOVE GR	REMOVE ANCHOR POST (N)	VEGETATION CONTROL (MINOR CONCRETE)
	LF	EA	EA	EA	EA	LF	EA	SQYD
L+ "Q1" 70+99 TO L+ "Q1" 71+75	25	1	1			78	1	59
R+ "Q1" 70+99 TO R+ "Q1" 71+75	75			1	1	63	1	34
R+ "Q1" 68+79 TO R+ "Q1" 69+55	25	1	1			65	1	48
L+ "Q1" 68+79 TO L+ "Q1" 69+55	75			1	1	63	1	34
TOTAL	200	2	2	2	2	269	4	175

(N) NOT A SEPARATE PAY ITEM, FOR INFORMATION ONLY.

RUMBLE STRIP (HMA, GROUND-IN INDENTATIONS)

	SHOULDER	CENTERLINE
STA	STA	STA
"Q1" 59+75 TO 69+42		9.67
"Q1" 71+12 TO 77+25		6.13
LT "Q1" 59+75 TO 69+42	9.42	
LT "Q1" 71+12 TO 74+75	3.63	
RT "Q1" 71+12 TO 77+25	6.13	
TOTAL	19.18	15.80

STAGING QUANTITIES

STAGE	Temp RAILING (TYPE K)	ALTERNATIVE Temp CRASH CUSHION	CHANNILIZER (SURFACE MOUNTED)
	LF	EA	EA
1	640	4	10
TOTAL	640	4	10

LOCATION		SAFETY EDGE (N)
SHEET	STATION	LF
L-1	"Q1" 60+00.00 TO "Q1" 68+50.00	850
L-2	"Q1" 68+50 TO "Q1" 69+54.00	104
L-2	"Q1" 71+12.00 TO "Q1" 77+00.00	588
	TOTAL	1,542

(N) NOT A SEPARATE PAY ITEM, FOR INFORMATION ONLY.

RESET MAILBOX

LOCATION	EA
DRIVEWAY 1	2
DRIVEWAY 2	1
TOTAL	3

STORM WATER QUANTITIES

	RAIN EVENT ACTION PLAN	STORM WATER ANNUAL REPORT	Temp CONSTRUCTION ENTRANCE	STORM WATER SAMPLING AND ANALYSIS DAY	MOVE IN/MOVE OUT (Temp EROSION CONTROL)	Temp HYDRAULIC MULCH (BONDED FIBER MATRIX)	Temp LARGE SEDIMENT BARRIER	Temp FIBER ROLL	Temp SILT FENCE	TREATED WOOD WASTE	Temp COVER
	EA	EA	EA	EA	EA	SQYD	LF	LF	LF	LB	SQYD
TOTAL	27	3	4	45	12	3,880	1,480	1,550	1,730	2,500	3,880

SUMMARY OF QUANTITIES

Q-2

REVISED BY | DATE REVISED
A.G. CHIN | CAROL MESMAN
CALCULATED-DESIGNED BY | CHECKED BY
FUNCTIONAL SUPERVISOR | STEPHEN T. WRIGHT

STATE OF CALIFORNIA - DEPARTMENT OF TRANSPORTATION
Caltrans
TRAFFIC

LAST REVISION 10-30-14 | DATE PLOTTED => 14-NOV-2014 | TIME PLOTTED => 14:46

Dist	COUNTY	ROUTE	POST MILES TOTAL PROJECT	SHEET No.	TOTAL SHEETS
03	But	99	40.5/40.8	34	76

LICENSED LANDSCAPE ARCHITECT

10-13-14
PLANS APPROVAL DATE

LICENSED LANDSCAPE ARCHITECT
LESLEY MORGAN
No. 5066
STATE OF CALIFORNIA
03-31-16
Renewal Date
06-16-14
Date

THE STATE OF CALIFORNIA OR ITS OFFICERS OR AGENTS SHALL NOT BE RESPONSIBLE FOR THE ACCURACY OR COMPLETENESS OF SCANNED COPIES OF THIS PLAN SHEET.

NOTE:

FOR ACCURATE RIGHT OF WAY DATA, CONTACT RIGHT OF WAY ENGINEERING AT THE DISTRICT OFFICE.

EROSION CONTROL COMPOST, HYDROSEED

FR FIBER ROLLS

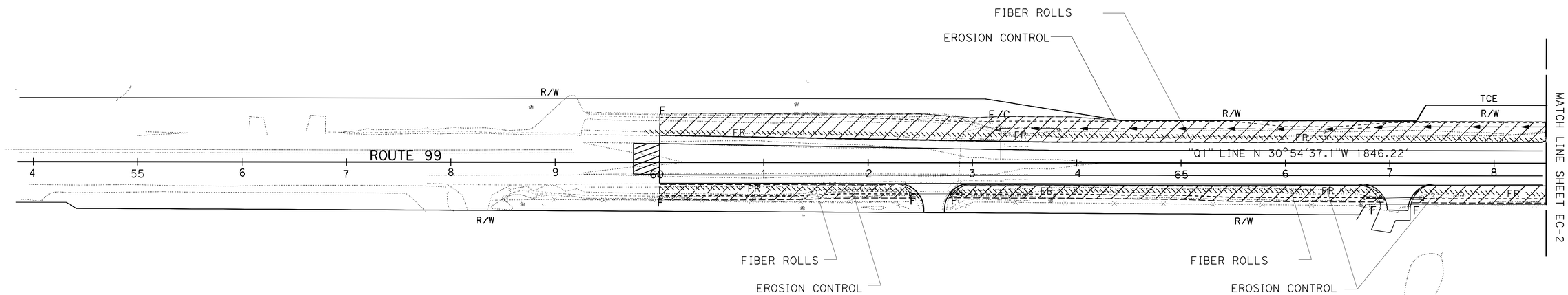

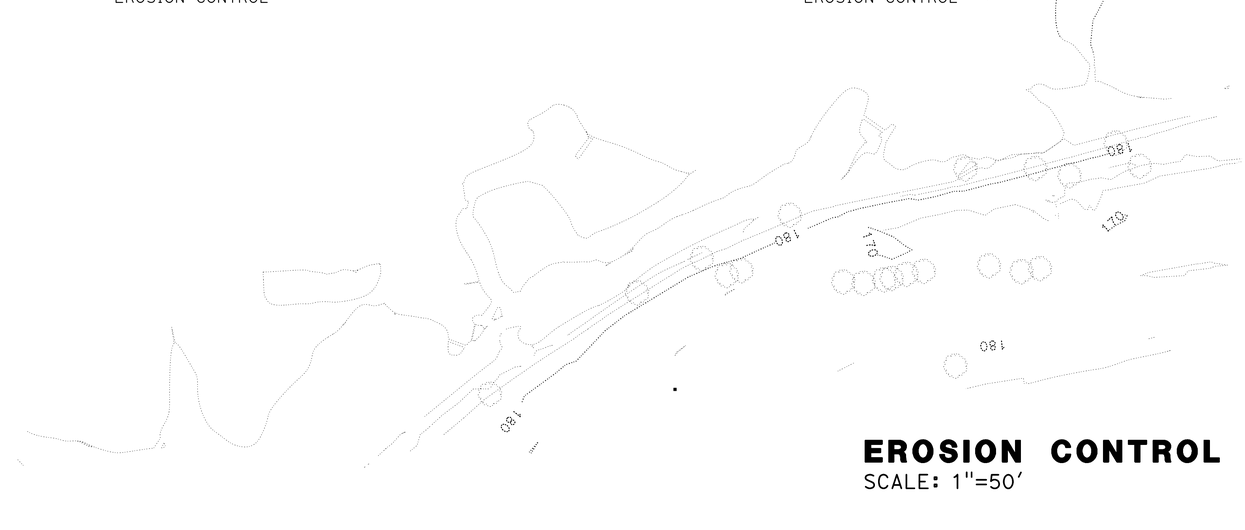

EROSION CONTROL PLAN
SCALE: 1"=50'

EC-1

REVISED BY
DATE REVISED

LELSEY MORGAN
T. CHRIS JOHNSON

CALCULATED-DESIGNED BY
CHECKED BY

SENIOR LANDSCAPE ARCHITECT
T. CHRIS JOHNSON

STATE OF CALIFORNIA - DEPARTMENT OF TRANSPORTATION
Caltrans LANDSCAPE ARCHITECTURE

LAST REVISION 00-00-00
DATE PLOTTED => 14-NOV-2014
TIME PLOTTED => 14:46

Dist	COUNTY	ROUTE	POST MILES TOTAL PROJECT	SHEET No.	TOTAL SHEETS
03	But	99	40.5/40.8	35	76

Lesley Morgan 10-13-14
LICENSED LANDSCAPE ARCHITECT

10-13-14
PLANS APPROVAL DATE

LICENSED LANDSCAPE ARCHITECT
LESLEY MORGAN
No. 5066
Lesley Morgan
Expiration date
03-31-16
Renewal date
06-16-14
Date
STATE OF CALIFORNIA

THE STATE OF CALIFORNIA OR ITS OFFICERS OR AGENTS SHALL NOT BE RESPONSIBLE FOR THE ACCURACY OR COMPLETENESS OF SCANNED COPIES OF THIS PLAN SHEET.

NOTE:

1. FOR ACCURATE RIGHT OF WAY DATA, CONTACT RIGHT OF WAY ENGINEERING AT THE DISTRICT OFFICE.

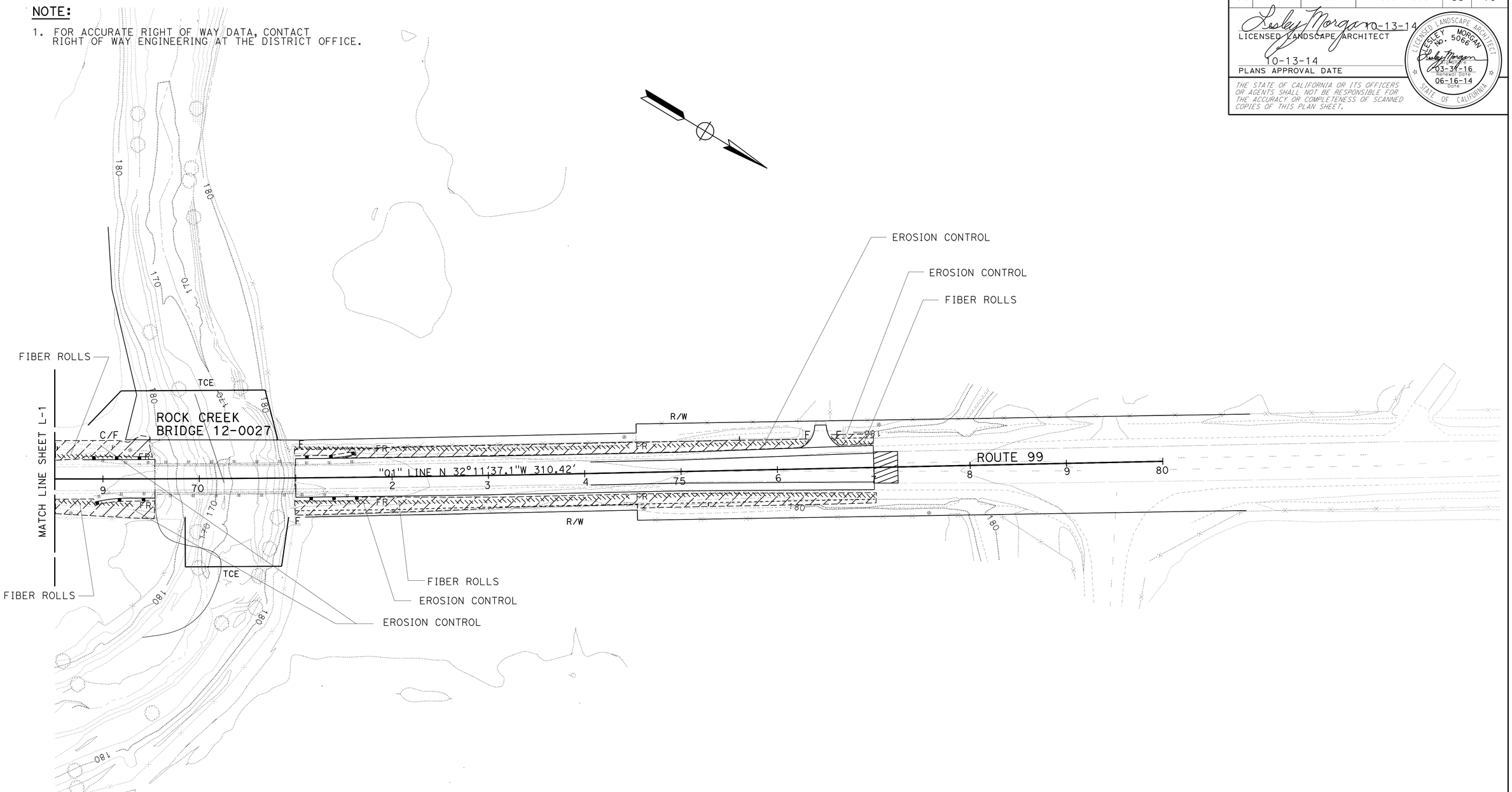

EROSION CONTROL PLAN

SCALE: 1"=50'

EC-2

STATE OF CALIFORNIA - DEPARTMENT OF TRANSPORTATION
Caltrans®
LANDSCAPE ARCHITECTURE

SENIOR LANDSCAPE ARCHITECT: T. CHRIS JOHNSON

CALCULATED-DESIGNED BY: LESLEY MORGAN
CHECKED BY: T. CHRIS JOHNSON

REVISED BY: 05/28/14
DATE REVISED:

LAST REVISION: 00-00-00
DATE PLOTTED => 17-NOV-2014
TIME PLOTTED => 11:31

Dist	COUNTY	ROUTE	POST MILES TOTAL PROJECT	SHEET No.	TOTAL SHEETS
03	But	99	40.5/40.8	36	76

Lesley Morgan 10-13-14
LICENSED LANDSCAPE ARCHITECT
10-13-14
PLANS APPROVAL DATE

LICENSED LANDSCAPE ARCHITECT LESLEY MORGAN No. 5066 Lesley Morgan Signature 03-31-16 Renewal date 06-16-14 Date STATE OF CALIFORNIA

THE STATE OF CALIFORNIA OR ITS OFFICERS OR AGENTS SHALL NOT BE RESPONSIBLE FOR THE ACCURACY OR COMPLETENESS OF SCANNED COPIES OF THIS PLAN SHEET.

EROSION CONTROL SEQUENCE

SEQUENCE	ITEM	MATERIAL DESCRIPTION	MATERIAL TYPE	APPLICATION RATE
STEP 1	COMPOST	COMPOST	MEDIUM	1" Depth
STEP 2	FIBER ROLLS	———	———	———
STEP 3	HYDROSEED	SEED	MIX 1	46 LB/ACRE
		FIBER	WOOD	2,000 LB/ACRE
		TACKIFIER	GUAR	125 LB/ACRE

FIBER ROLLS

SEQUENCE	ITEM	MATERIAL DESCRIPTION	MATERIAL TYPE	REMARKS
In erosion control areas, Fiber Rolls must be installed before Hydroseed	FIBER ROLLS	FIBER ROLL	TYPE B 8" TO 10" Dia	Type 2 Fiber Roll installation

SEED MIX

BOTANICAL NAME (COMMON NAME)	PERCENT GERMINATION (MINIMUM)	POUNDS PURE LIVE SEED PER ACRE (SLOPE MEASUREMENT)
Elymus elymoides (Bottlebrush Squirreltail)	40	9.0
Bromus Carinatus (California Brome)	53	20.0
Achillea millefolium (Common Yallow)	56	1.0
Lotus purshianus (Purshing Lotus)	46	14.0
Poa secunda (Pine Bluegrass)	46	2.0
		TOTAL 46 LBS

EROSION CONTROL

SHEET	STATION	DESCRIPTION	COMPOST SQFT	HYDROSEED SQFT	FIBER ROLLS LF
EC-1	60+00 TO 68+50.01	SB	18,693	18,693	850
EC-1	60+00 TO 62+53.54	NB	3,386	3,386	240
EC-1	62+73.15 TO 66+97.59	NB	5,405	5,405	402
EC-1	67+17.54 TO 68+50.01	NB	2,055	2,055	121
EC-2	68+50.01 TO 69+53.60	SB	1,782	1,782	98
EC-2	71+00 TO 76+34.84	SB	5,365	5,365	530
EC-2	76+52.46 TO 77+00	SB	431	431	40
EC-2	68+50.01 TO 69+53.60	NB	1,655	1,655	102
EC-2	71+00 TO 77+00	NB	7,746	7,746	598
		TOTAL	46,518	46,518	2,981

EROSION CONTROL LEGEND AND QUANTITIES
ECL-1

REVISED BY 05/28/14
DATE REVISED
LESLEY MORGAN
T. CHRIS JOHNSON
CALCULATED-DESIGNED BY
CHECKED BY
SENIOR LANDSCAPE ARCHITECT
T. CHRIS JOHNSON
STATE OF CALIFORNIA - DEPARTMENT OF TRANSPORTATION
Caltrans LANDSCAPE ARCHITECTURE

LAST REVISION 00-00-00
DATE PLOTTED => 14-NOV-2014
TIME PLOTTED => 14:46

M

Maint	MAINTENANCE
Max	MAXIMUM
MB	METAL BEAM
MBB	METAL BEAM BARRIER
MBGR	METAL BEAM GUARD RAILING
Med	MEDIAN
MGS	MIDWEST GUARDRAIL SYSTEM
MH	MANHOLE
Min	MINIMUM
Misc	MISCELLANEOUS
Misc I & S	MISCELLANEOUS IRON AND STEEL
Mkr	MARKER
Mod	MODIFIED, MODIFY
Mon	MONUMENT
MP	METAL PLATE
MPGR	METAL PLATE GUARD RAILING
MR	MOVEMENT RATING
MSE	MECHANICALLY STABILIZED EMBANKMENT
Mt	MOUNTAIN, MOUNT
Mtl	MATERIAL
MVP	MAINTENANCE VEHICLE PULLOUT

N

N	NORTH
NB	NORTHBOUND
No.	NUMBER (MUST HAVE PERIOD)
Nos.	NUMBERS (MUST HAVE PERIOD)
NPS	NOMINAL PIPE SIZE
NS	NEAR SIDE
NSP	NEW STANDARD PLAN
NTS	NOT TO SCALE

O

Oblr	OBLITERATE
OC	OVERCROSSING
OD	OUTSIDE DIAMETER
OF	OUTSIDE FACE
OG	ORIGINAL GROUND
OGAC	OPEN GRADED ASPHALT CONCRETE
OGFC	OPEN GRADED FRICTION COURSE
OH	OVERHEAD
OHWM	ORDINARY HIGH WATER MARK
O-O	OUT TO OUT
Opp	OPPOSITE
OSD	OVERSIDE DRAIN

P

p	PAGE
PAP	PERFORATED ALUMINUM PIPE
PB	PULL BOX
PC	POINT OF CURVATURE, PRECAST
PCC	POINT OF COMPOUND CURVE, PORTLAND CEMENT CONCRETE
PCMS	PORTABLE CHANGEABLE MESSAGE SIGN
PCP	PERFORATED CONCRETE PIPE, PRESTRESSED CONCRETE PIPE
PCVC	POINT OF COMPOUND VERTICAL CURVE
PEC	PERMIT TO ENTER AND CONSTRUCT
Ped	PEDESTRIAN
Ped OC	PEDESTRIAN OVERCROSSING
Ped UC	PEDESTRIAN UNDERCROSSING
Perm Mtl	PERMEABLE MATERIAL

P continued

PG	PROFILE GRADE
PI	POINT OF INTERSECTION
PJP	PARTIAL JOINT PENETRATION
Pkwy	PARKWAY
ℙ,PL	PLATE
P/L	PROPERTY LINE
PM	POST MILE, TIME FROM NOON TO MIDNIGHT
PN	PAVING NOTCH
POC	POINT OF HORIZONTAL CURVE
POT	POINT OF TANGENT
POVC	POINT OF VERTICAL CURVE
PP	PIPE PILE, PLASTIC PIPE, POWER POLE
PPL	PREFORMED PERMEABLE LINER
PPP	PERFORATED PLASTIC PIPE
PRC	POINT OF REVERSE CURVE
PRF	PAVEMENT REINFORCING FABRIC
PRVC	POINT OF REVERSE VERTICAL CURVE
PS&E	PLANS, SPECIFICATIONS AND ESTIMATES
PS, P/S	PRESTRESSED
PSP	PERFORATED STEEL PIPE
PT	POINT OF TANGENCY
PVC	POLYVINYL CHLORIDE
Pvmt	PAVEMENT

Q

Qty	QUANTITY

R

R	RADIUS
R & D	REMOVE AND DISPOSE
R & S	REMOVE AND SALVAGE
R/C	RATE OF CHANGE
RCA	REINFORCED CONCRETE ARCH
RCB	REINFORCED CONCRETE BOX
RCP	REINFORCED CONCRETE PIPE
RCPA	REINFORCED CONCRETE PIPE ARCH
Rd	ROAD
Reinf	REINFORCED, REINFORCEMENT, REINFORCING
Rel	RELOCATE
Repl	REPLACEMENT
Ret	RETAINING
Rev	REVISED, REVISION
Rdwy	ROADWAY
RHMA	RUBBERIZED HOT MIX ASPHALT
Riv	RIVER
RM	ROAD-MIXED
RP	RADIUS POINT, REFERENCE POINT
RR	RAILROAD
RSP	ROCK SLOPE PROTECTION, REVISED STANDARD PLAN
Rt	RIGHT
Rte	ROUTE
RW	REDWOOD, RETAINING WALL
R/W	RIGHT OF WAY
Rwy	RAILWAY

S

S	SOUTH, SUPPLEMENT
SAE	STRUCTURE APPROACH EMBANKMENT
Salv	SALVAGE
SAPP	STRUCTURAL ALUMINUM PLATE PIPE
SB	SOUTHBOUND
SC	SAND CUSHION
SCSP	SLOTTED CORRUGATED STEEL PIPE
SD	STORM DRAIN
Sec	SECOND, SECTION
Sep	SEPARATION
SG	SUBGRADE
Shld	SHOULDER
Sht	SHEET
Sim	SIMILAR
℄	STATION LINE
SM	SELECTED MATERIAL
Spec	SPECIAL, SPECIFICATIONS
SPP	SLOTTED PLASTIC PIPE
SS	SLOPE STAKE
SSBM	STRAP AND SADDLE BRACKET METHOD
SSD	STRUCTURAL SECTION DRAIN
SSPA	STRUCTURAL STEEL PLATE ARCH
SSPP	STRUCTURAL STEEL PLATE PIPE
SSPPA	STRUCTURAL STEEL PLATE PIPE ARCH
SSRP	STEEL SPIRAL RIB PIPE
St	STREET
Sta	STATION
STBB	SINGLE THRIE BEAM BARRIER
Std	STANDARD
Str	STRUCTURE
Surf	SURFACING
SW	SIDEWALK, SOUND WALL
Swr	SEWER
Sym	SYMMETRICAL
S4S	SURFACE 4 SIDES

T

T	SEMI-TANGENT
Tan	TANGENT
TBB	THRIE BEAM BARRIER
Tbr	TIMBER
TC	TOP OF CURB
TCB	TRAFFIC CONTROL BOX
TCE	TEMPORARY CONSTRUCTION EASEMENT
Tel	TELEPHONE
Temp	TEMPORARY
TG	TOP OF GRADE
Tot	TOTAL
TP	TELEPHONE POLE
TPB	TREATED PERMEABLE BASE
TPM	TREATED PERMEABLE MATERIAL
Trans	TRANSITION

T continued

TS	TRANSVERSE, TRAFFIC SIGNAL, TUBULAR STEEL
Typ	TYPICAL

U

UC	UNDERCROSSING
UD	UNDERDRAIN
UG	UNDERGROUND
UON	UNLESS OTHERWISE NOTED
UP	UNDERPASS

V

V	VALVE, DESIGN SPEED
Var	VARIABLE, VARIES
VC	VERTICAL CURVE
VCP	VITRIFIED CLAY PIPE
Vert	VERTICAL
Via	VIADUCT
Vol	VOLUME

W

W	WEST, WIDTH
WB	WESTBOUND
WH	WEEP HOLE
WM	WIRE MESH
WS	WATER SURFACE
WSP	WELDED STEEL PIPE
Wt	WEIGHT
WV	WATER VALVE
WW	WINGWALL
WWLOL	WINGWALL LAYOUT LINE

X

X Sec	CROSS SECTION
Xing	CROSSING

Y

Yr	YEAR
Yrs	YEARS

Dist	COUNTY	ROUTE	POST MILES TOTAL PROJECT	SHEET No.	TOTAL SHEETS
03	But	99	40.5/40.8	37	76

Grace M. Tsushima
REGISTERED CIVIL ENGINEER

July 19, 2013
PLANS APPROVAL DATE

REGISTERED PROFESSIONAL ENGINEER
Grace M. Tsushima
No. C49814
Exp. 9-30-14
CIVIL
STATE OF CALIFORNIA

THE STATE OF CALIFORNIA OR ITS OFFICERS OR AGENTS SHALL NOT BE RESPONSIBLE FOR THE ACCURACY OR COMPLETENESS OF SCANNED COPIES OF THIS PLAN SHEET.

TO ACCOMPANY PLANS DATED 10-13-14

UNIT OF MEASUREMENT SYMBOLS:

Some of the symbols used in the project plan quantity tables and in the Bid Item List are:

TABLE A

SYMBOL USED	DEFINITIONS
ACRE	ACRE
CF	CUBIC FOOT
CY	CUBIC YARD
EA	EACH
GAL	GALLON
LB	POUND
LF	LINEAR FOOT
SQFT	SQUARE FOOT
SQYD	SQUARE YARD
STA	100 FEET
TAB	TABLET
TON	2,000 POUNDS

Some of the symbols used in the plans other than in the project plan quantity tables are:

TABLE B

SYMBOL USED	DEFINITIONS
ksi	KIPS PER SQUARE INCH
ksf	KIPS PER SQUARE FOOT
psi	POUNDS PER SQUARE INCH
psf	POUNDS PER SQUARE FOOT
lb/ft^3, pcf	POUNDS PER CUBIC FOOT
tsf	TONS PER SQUARE FOOT
mph, MPH *	MILES PER HOUR
ø	NOMINAL DIAMETER
oz	OUNCE
lb	POUND
kip	1,000 POUNDS
cal	CALORIE
ft	FOOT OR FEET
gal	GALLON

* For use on a sign panel only

STATE OF CALIFORNIA
DEPARTMENT OF TRANSPORTATION

ABBREVIATIONS (SHEET 2 OF 2)

NO SCALE

RSP A10B DATED JULY 19, 2013 SUPERSEDES STANDARD PLAN A10B DATED MAY 20, 2011 - PAGE 2 OF THE STANDARD PLANS BOOK DATED 2010.

REVISED STANDARD PLAN RSP A10B

2010 REVISED STANDARD PLAN RSP A10B

6-7-13

Dist	COUNTY	ROUTE	POST MILES TOTAL PROJECT	SHEET No.	TOTAL SHEETS
03	But	99	40.5/40.8	38	76

Randell D. Hiatt
REGISTERED CIVIL ENGINEER

July 19, 2013
PLANS APPROVAL DATE

REGISTERED PROFESSIONAL ENGINEER Randell D. Hiatt No. C50200 Exp. 6-30-15 CIVIL STATE OF CALIFORNIA

THE STATE OF CALIFORNIA OR ITS OFFICERS OR AGENTS SHALL NOT BE RESPONSIBLE FOR THE ACCURACY OR COMPLETENESS OF SCANNED COPIES OF THIS PLAN SHEET.

TO ACCOMPANY PLANS DATED 10-13-14

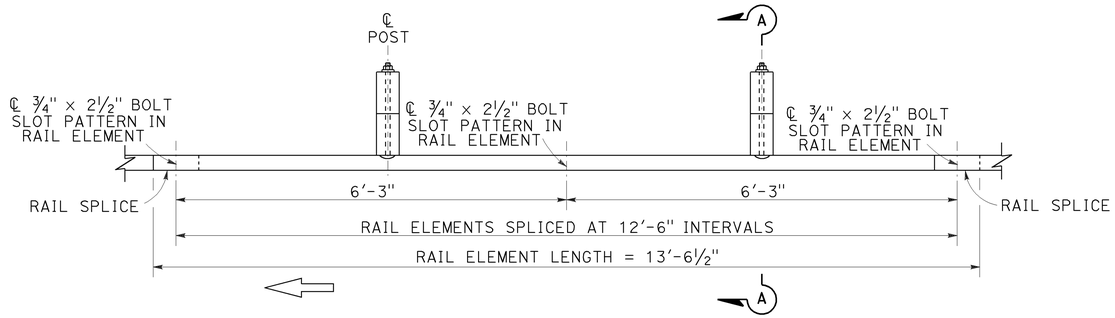

PLAN

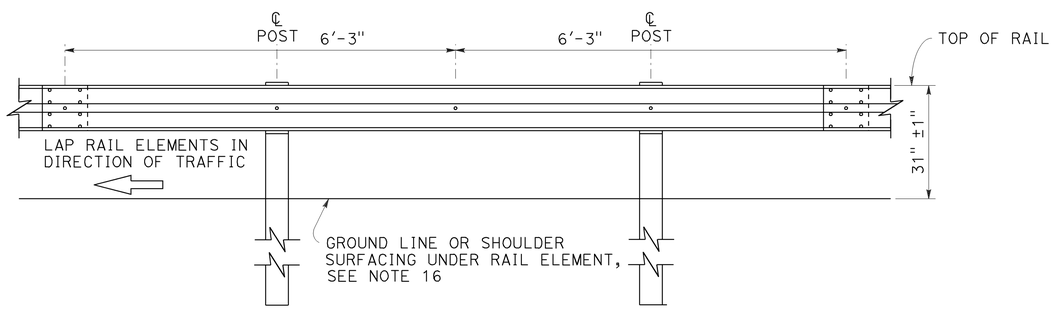

ELEVATION

MIDWEST GUARDRAIL SYSTEM WITH WOOD POST AND BLOCKS

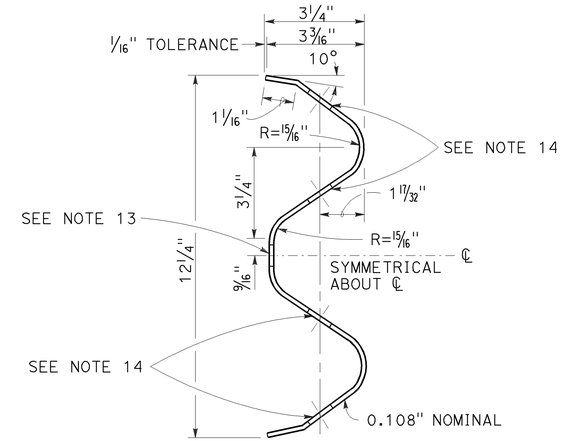

SECTION THRU RAIL ELEMENT

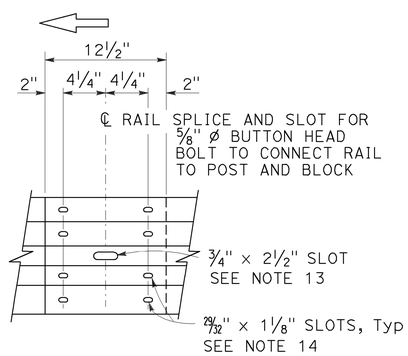

ELEVATION

RAIL ELEMENT SPLICE DETAIL

a) Connect the over lapped end of the rail elements with ⅝" ø × 1⅜" button head oval shoulder splice bolts inserted into the 29⁄32" × 1⅛" slots and bolted together with ⅝" ø recessed hex nuts. Recess of hex nut points toward rail element. A total of 8 bolts and nuts are to be used at each rail splice connection.

b) The ends of the rail elements are to be overlapped in the direction of traffic (see details).

c) Where end cap is to be attached to the end of a rail element, a total of 4 of the above described splice bolts and nuts are to be used.

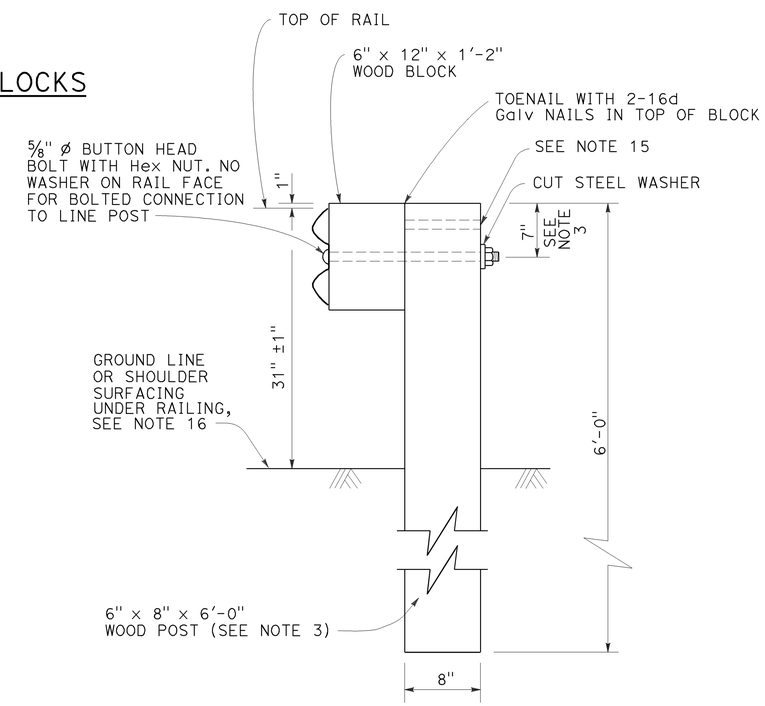

SECTION A-A

TYPICAL WOOD LINE POST INSTALLATION

See Note 4

NOTES:

1. For details of steel post installations, see Revised Standard Plan RSP A77L2.
2. For details of standard hardware used to construct MGS, see Revised Standard Plan RSP A77M1.
3. For details of wood posts and wood blocks used to construct MGS, see Revised Standard Plan RSP A77N1.
4. For additional installation details, see Revised Standard Plan RSP A77N3.
5. MGS post spacing to be 6'-3" center to center, except as otherwise noted.
6. For MGS typical layouts, see the A77P, A77Q and A77R Series of Standard Plans.
7. If railing is connected to terminal system end treatment, use 31" height terminal system end treatment.
8. For MGS end anchor details, see Revised Standard Plans RSP A77S1 and RSP A77T2.
9. For details of MGS transition to bridge railing, see Revised Standard Plan RSP A77U4.
10. For additional details of MSG connection to bridge railing, see Revised Standard Plans RSP A77U1, RSP A77U2 and RSP A77V1.
11. For MGS connection details to abutments and walls, see Revised Standard Plan RSP A77U3.
12. For typical MGS delineation and dike positioning details, see Revised Standard Plan RSP A77N4.
13. Slotted hole for bolted connection of rail element to block and post. See "Section Thru Rail Element".
14. Slotted holes for splice bolts to overlap ends of rail element. See "Section Thru Rail Element".
15. Additional hole in uppermost portion of line post is for potential future adjustments of railing height. See Revised Standard Plan RSP A77N1.
16. Install posts in soil.

STATE OF CALIFORNIA
DEPARTMENT OF TRANSPORTATION

MIDWEST GUARDRAIL SYSTEM STANDARD RAILING SECTION (WOOD POST WITH WOOD BLOCK)

NO SCALE

RSP A77L1 DATED JULY 19, 2013 SUPPLEMENTS STANDARD PLANS BOOK DATED 2010.

REVISED STANDARD PLAN RSP A77L1

2010 REVISED STANDARD PLAN RSP A77L1

7-3-13

Dist	COUNTY	ROUTE	POST MILES TOTAL PROJECT	SHEET No.	TOTAL SHEETS
03	But	99	40.5/40.8	39	76

Randell D. Hiatt
REGISTERED CIVIL ENGINEER

July 19, 2013
PLANS APPROVAL DATE

REGISTERED PROFESSIONAL ENGINEER
Randell D. Hiatt
No. C50200
Exp. 6-30-15
CIVIL
STATE OF CALIFORNIA

THE STATE OF CALIFORNIA OR ITS OFFICERS OR AGENTS SHALL NOT BE RESPONSIBLE FOR THE ACCURACY OR COMPLETENESS OF SCANNED COPIES OF THIS PLAN SHEET.

TO ACCOMPANY PLANS DATED 10-13-14

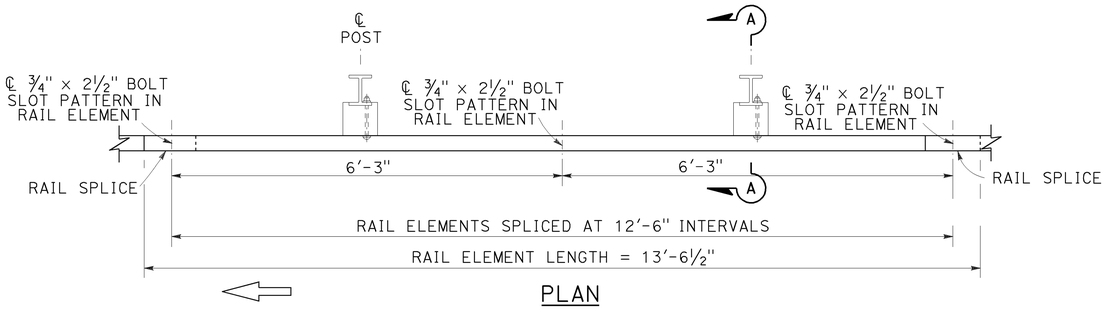

PLAN

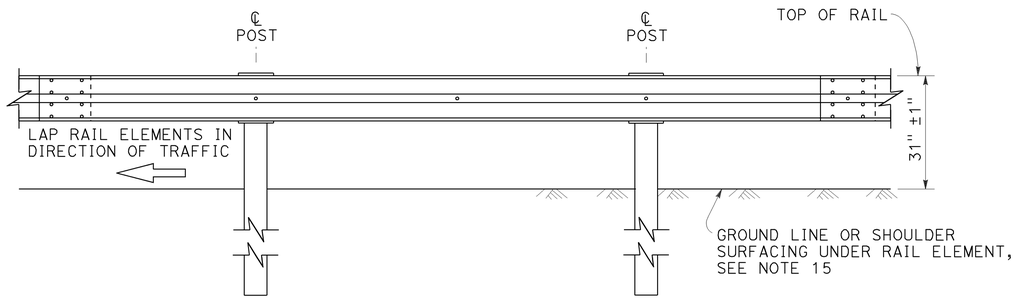

ELEVATION

MIDWEST GUARDRAIL SYSTEM WITH STEEL POSTS AND NOTCHED WOOD OR NOTCHED RECYCLED PLASTIC BLOCKS

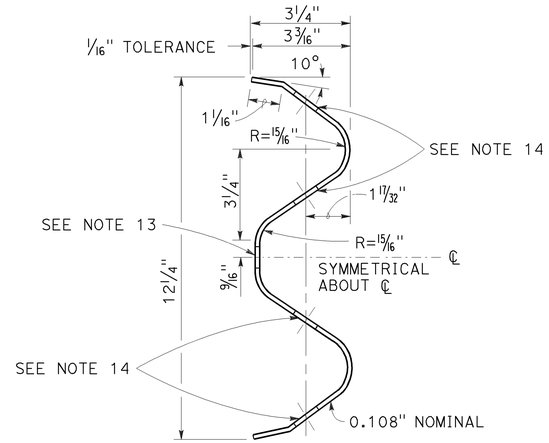

SECTION THRU RAIL ELEMENT

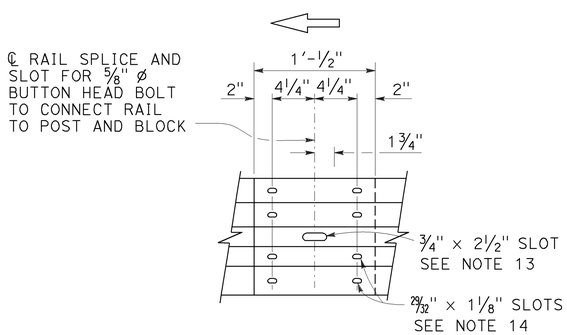

ELEVATION

RAIL ELEMENT SPLICE DETAIL

a) Connect the over lapped end of the rail elements with ⅝" ø × 1⅜" button head oval shoulder splice bolts inserted into the 29⁄32" × 1⅛" slots and bolted together with ⅝" ø recessed hex nuts. Recess of hex nut points toward rail element. A total of 8 bolts and nuts are to be used at each rail splice connection.

b) The ends of the rail elements are to be overlapped in the direction of traffic (see details).

c) Where end cap is to be attached to the end of a rail element, a total of 4 of the above described splice bolts and nuts are to be used.

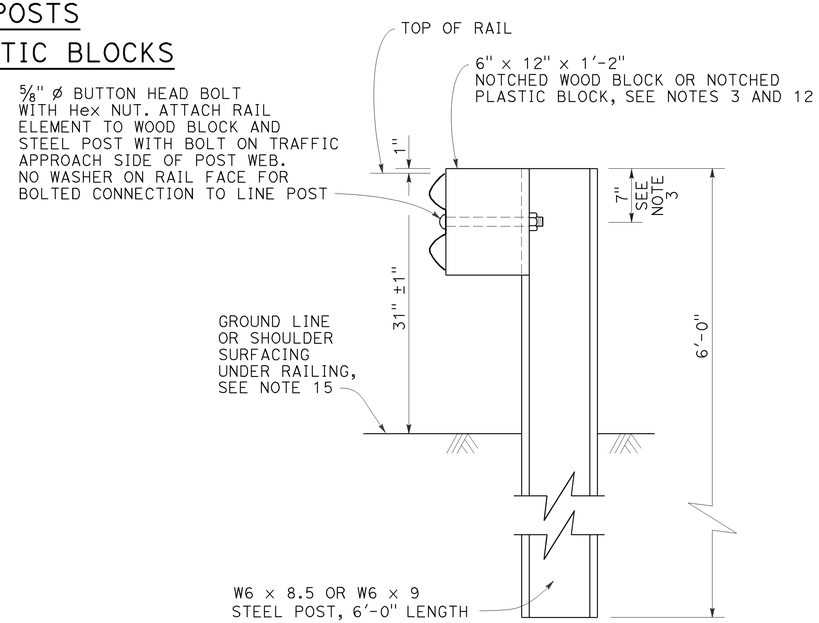

SECTION A-A

TYPICAL STEEL LINE POST INSTALLATION

See Note 4

NOTES:

1. For details of wood post installations, see Revised Standard Plan RSP A77L1.
2. For details of standard hardware used to construct MGS, see Revised Standard Plan RSP A77M1.
3. For details of steel posts and notched wood blocks used to construct MGS, see Revised Standard Plan RSP A77N2.
4. For additional installation details, see Revised Standard Plan RSP A77N3.
5. MGS post spacing to be 6'-3" center to center, except as otherwise noted.
6. For MGS typical layouts, see the A77P, A77Q and A77R Series of Standard Plans.
7. If railing is connected to terminal system end treatment, use 31" height terminal system end treatment.
8. For MGS end anchor details, see Revised Standard Plans RSP A77S1 and RSP A77T2.
9. For details of MGS transition to bridge railing, see Revised Standard Plan RSP A77U4.
10. For additional details of MGS connection to bridge railings, see Revised Standard Plans RSP A77U1, RSP A77U2 and RSP A77V1.
11. For dike positioning and MGS delineation details, see Revised Standard Plan RSP A77N4.
12. Notched face of block faces steel post.
13. Slotted hole for bolted connection of rail element to block and post. See "Section Thru Rail Element".
14. Slotted holes for splice bolts to overlap ends of rail element. See "Section Thru Rail Element".
15. Install posts in soil.

STATE OF CALIFORNIA
DEPARTMENT OF TRANSPORTATION

MIDWEST GUARDRAIL SYSTEM STANDARD RAILING SECTION (STEEL POST WITH NOTCHED WOOD OR NOTCHED RECYCLED PLASTIC BLOCK)

NO SCALE

RSP A77L2 DATED JULY 19, 2013 SUPPLEMENTS THE STANDARD PLANS BOOK DATED 2010.

REVISED STANDARD PLAN RSP A77L2

2010 REVISED STANDARD PLAN RSP A77L2

7-3-13

Dist	COUNTY	ROUTE	POST MILES TOTAL PROJECT	SHEET No.	TOTAL SHEETS
03	But	99	40.5/40.8	40	76

Randell D. Hiatt
REGISTERED CIVIL ENGINEER

July 19, 2013
PLANS APPROVAL DATE

REGISTERED PROFESSIONAL ENGINEER
Randell D. Hiatt
No. C50200
Exp. 6-30-15
CIVIL
STATE OF CALIFORNIA

THE STATE OF CALIFORNIA OR ITS OFFICERS OR AGENTS SHALL NOT BE RESPONSIBLE FOR THE ACCURACY OR COMPLETENESS OF SCANNED COPIES OF THIS PLAN SHEET.

TO ACCOMPANY PLANS DATED 10-13-14

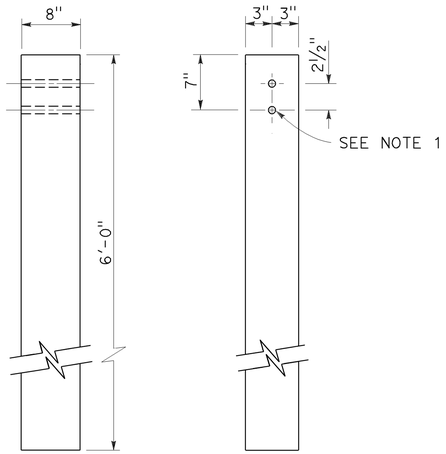

SIDE FRONT

6" x 8" WOOD POST
See Note 3

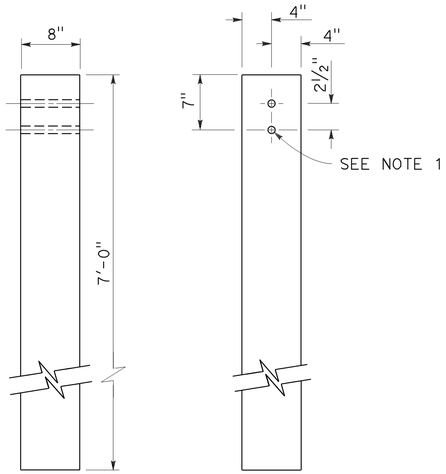

SIDE FRONT

8" x 8" WOOD POST
See Note 4

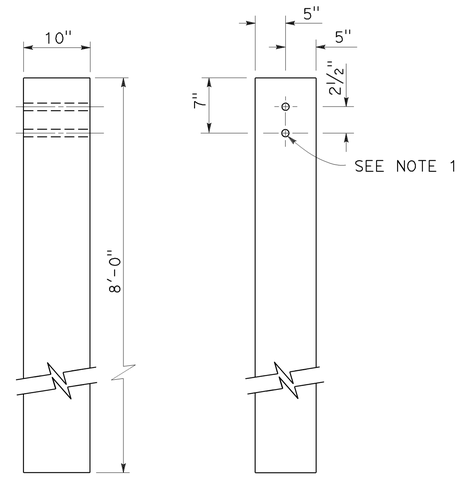

SIDE FRONT

10" x 10" WOOD POST
See Note 5

NOTES:

1. All holes in wood posts and blocks shall be 3/4" Dia ± 1/16".
2. Dimensions shown for wood post are nominal.
3. This post and block combination used for standard line post sections of MGS.
4. This post and 8" x 12" block combination used for line post sections of MGS on narrow roadways.
5. This post and 8" x 12" block combination is typically used where strengthened line post sections of MGS are warranted to shield fixed objects.
6. See Revised Standard Plan RSP A77L3 for use of 6" x 8" and 8" x 8" wood blocks.

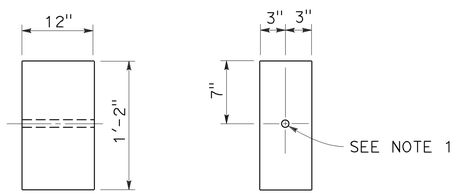

SIDE FRONT

6" x 12" WOOD BLOCK
See Note 3

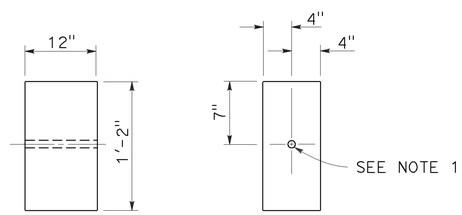

SIDE FRONT

8" x 12" WOOD BLOCK

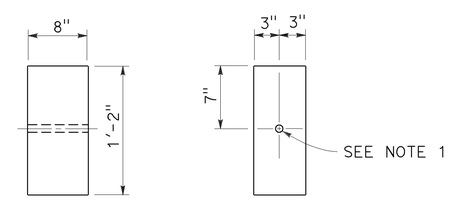

SIDE FRONT

6" x 8" WOOD BLOCK
Only for use with metal beam guard rail see Note 6

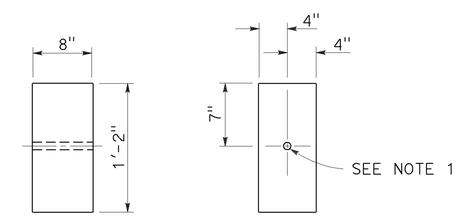

SIDE FRONT

8" x 8" WOOD BLOCK
Only for use with metal beam guard rail see Note 6

STATE OF CALIFORNIA
DEPARTMENT OF TRANSPORTATION

MIDWEST GUARDRAIL SYSTEM WOOD POST AND WOOD BLOCK DETAILS

NO SCALE

RSP A77N1 DATED JULY 19, 2013 SUPPLEMENTS THE STANDARD PLANS BOOK DATED 2010.

REVISED STANDARD PLAN RSP A77N1

2010 REVISED STANDARD PLAN RSP A77N1

7-3-13

Dist	COUNTY	ROUTE	POST MILES TOTAL PROJECT	SHEET No.	TOTAL SHEETS
03	But	99	40.5/40.8	41	76

Randell D. Hiatt
REGISTERED CIVIL ENGINEER

November 15, 2013
PLANS APPROVAL DATE

REGISTERED PROFESSIONAL ENGINEER
Randell D. Hiatt
No. C50200
Exp. 6-30-15
CIVIL
STATE OF CALIFORNIA

THE STATE OF CALIFORNIA OR ITS OFFICERS OR AGENTS SHALL NOT BE RESPONSIBLE FOR THE ACCURACY OR COMPLETENESS OF SCANNED COPIES OF THIS PLAN SHEET.

TO ACCOMPANY PLANS DATED 10-13-14

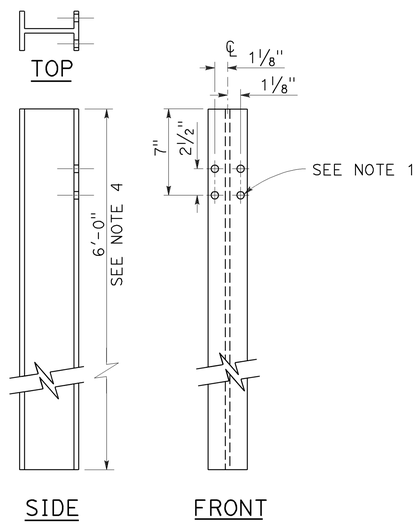

W6 x 9 OR W6 x 8.5
STEEL POST
See Note 4

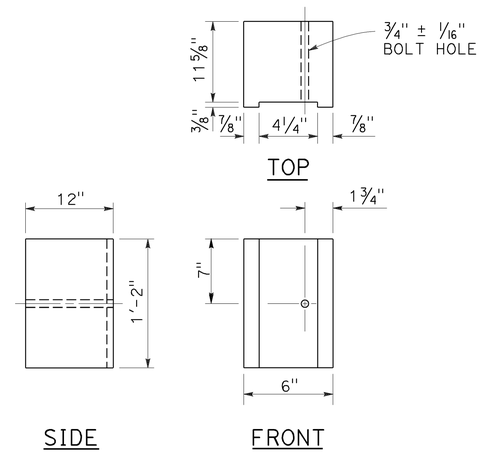

6" x 12"
NOTCHED WOOD BLOCK
See Notes 2 and 3

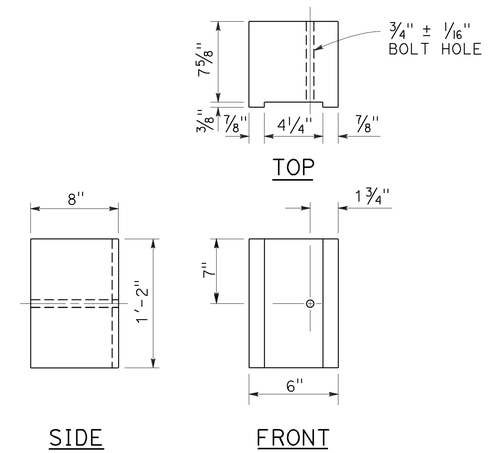

6" x 8"
NOTCHED WOOD BLOCK
Only for use with metal beam guard railing. See Note 5

NOTES:

1. All holes in steel post shall be 13/16" Dia maximum.
2. Dimensions shown for wood block are nominal.
3. Notched face of block faces steel post.
4. 6'-0" length posts to be used for typical roadway installation. See Revised Standard Plan RSP A77N3.
5. See Revised Standard Plan RSP A77L3 for use of 6" x 8" and 8" x 8" notched wood blocks.
6. This post and 8" x 12" block combination to be used for line post sections of MGS on narrow roadways and where strengthened line post sections of MGS are warranted to shield fixed objects.

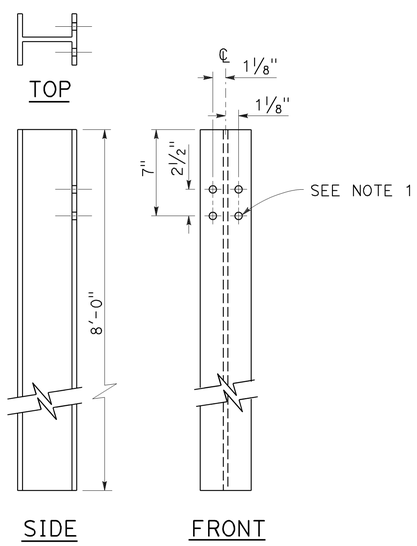

W6 x 15
STEEL POST
See Note 6

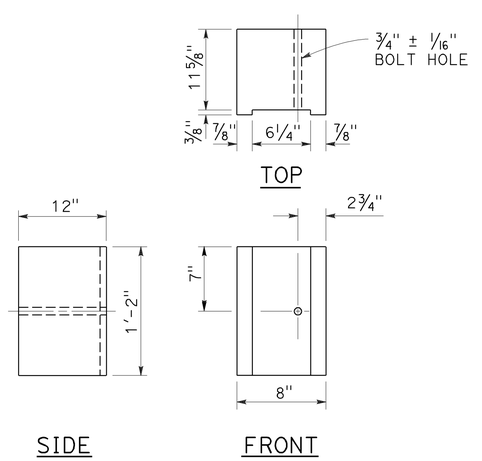

8" x 12"
NOTCHED WOOD BLOCK
See Notes 2 and 3

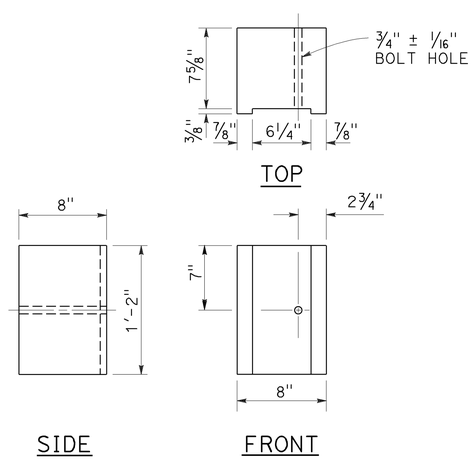

8" x 8"
NOTCHED WOOD BLOCK
Only for use with metal beam guard railing. See Note 5

STATE OF CALIFORNIA
DEPARTMENT OF TRANSPORTATION

MIDWEST GUARDRAIL SYSTEM STEEL POST AND NOTCHED WOOD BLOCK DETAILS

NO SCALE

RSP A77N2 DATED NOVEMBER 15, 2013 SUPERSEDES RSP A77N2
DATED JULY 19, 2013 THAT SUPPLEMENTS THE STANDARD PLANS BOOK DATED 2010.

REVISED STANDARD PLAN RSP A77N2

2010 REVISED STANDARD PLAN RSP A77N2

10-29-13

Dist	COUNTY	ROUTE	POST MILES TOTAL PROJECT	SHEET No.	TOTAL SHEETS
03	But	99	40.5/40.8	42	76

Randell D. Hiatt
REGISTERED CIVIL ENGINEER

July 19, 2013
PLANS APPROVAL DATE

REGISTERED PROFESSIONAL ENGINEER
Randell D. Hiatt
No. C50200
Exp. 6-30-15
CIVIL
STATE OF CALIFORNIA

THE STATE OF CALIFORNIA OR ITS OFFICERS OR AGENTS SHALL NOT BE RESPONSIBLE FOR THE ACCURACY OR COMPLETENESS OF SCANNED COPIES OF THIS PLAN SHEET.

TO ACCOMPANY PLANS DATED 10-13-14

NOTES:

1. When necessary to place dike more than 7" in front of face of MGS, only Type C dike may be used. For dike details, see Revised Standard Plan RSP A87B.
2. For standard railing post embedment, see Revised Standard Plan RSP A77N3.
3. MGS delineation to be used where shown on the Project Plans.
4. When dike or curb is placed under MGS, the maximum height of the dike or curb shall be 6". Mountable dike should not be used. For dike and curb details, see Revised Standard Plans RSP A87A and RSP A87B.
5. For details of typical distance between the face of rail and hinge point, see Revised Standard Plan RSP A77N3.
6. For steel line posts, use 1/4 - 20 self-tapping screws in 0.22" diameter holes or 1/4" bolts in 9/32" diameter holes.

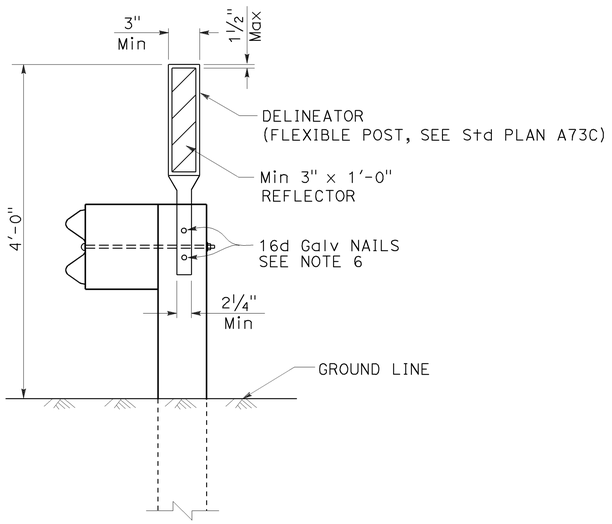

MGS DELINEATION

See Note 3

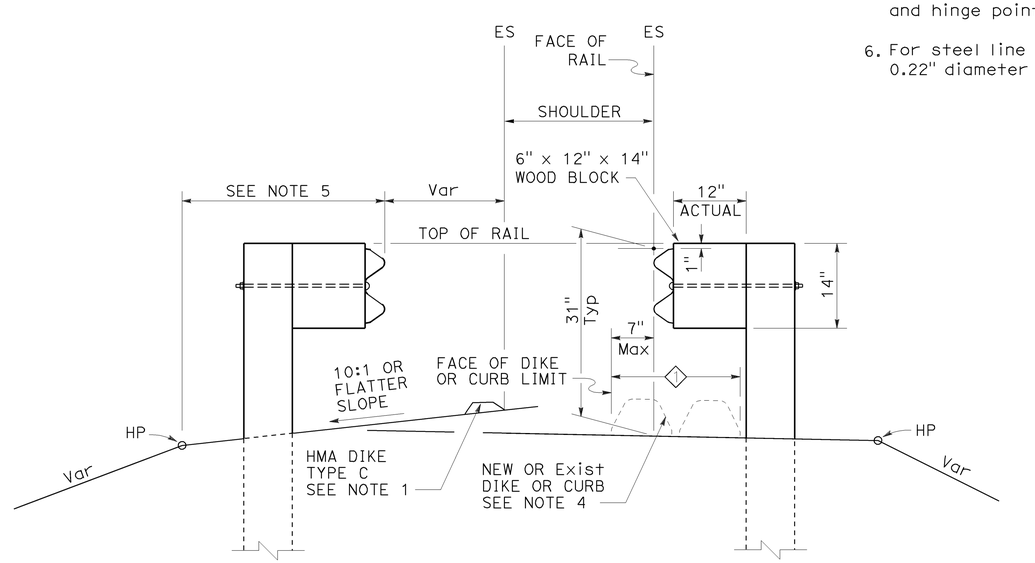

DIKE POSITIONING

See Note 1

1 PERMISSIBLE DIKE OR CURB PLACEMENT AREA

STATE OF CALIFORNIA
DEPARTMENT OF TRANSPORTATION

MIDWEST GUARDRAIL SYSTEM TYPICAL RAILING DELINEATION AND DIKE POSITIONING DETAILS

NO SCALE

RSP A77N4 DATED JULY 19, 2013 SUPPLEMENTS THE STANDARD PLANS BOOK DATED 2010.

REVISED STANDARD PLAN RSP A77N4

2010 REVISED STANDARD PLAN RSP A77N4

7-10-13

Dist	COUNTY	ROUTE	POST MILES TOTAL PROJECT	SHEET No.	TOTAL SHEETS
03	But	99	40.5/40.8	43	76

Randell D. Hiatt
REGISTERED CIVIL ENGINEER

July 19, 2013
PLANS APPROVAL DATE

REGISTERED PROFESSIONAL ENGINEER
Randell D. Hiatt
No. C50200
Exp. 6-30-15
CIVIL
STATE OF CALIFORNIA

THE STATE OF CALIFORNIA OR ITS OFFICERS OR AGENTS SHALL NOT BE RESPONSIBLE FOR THE ACCURACY OR COMPLETENESS OF SCANNED COPIES OF THIS PLAN SHEET.

TO ACCOMPANY PLANS DATED 10-13-14

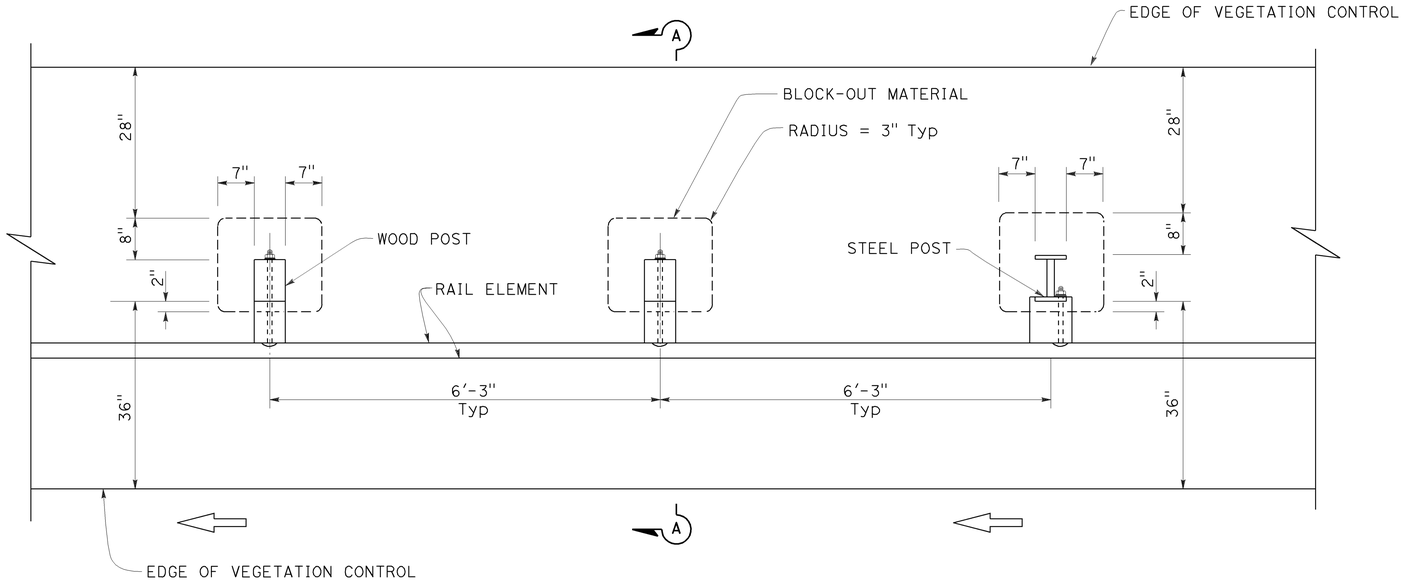

PLAN

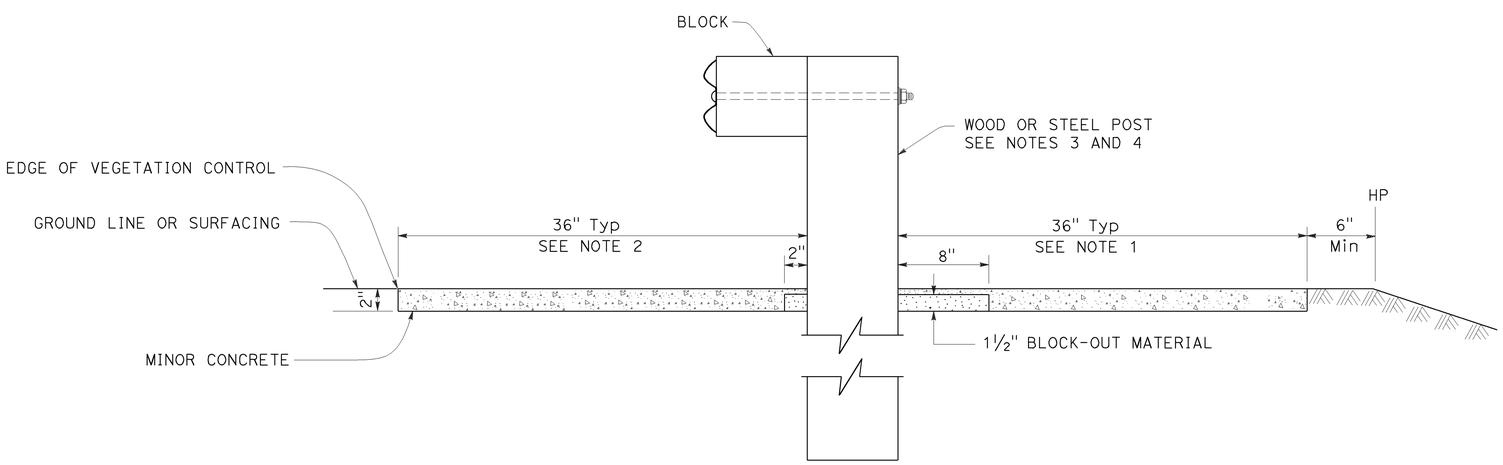

SECTION A-A

NOTES:

1. Where the distance between back of post and hinge point is less than 42", construct vegetation control to 6" from hinge point while maintaining the 8" block-out at back of post. If the 8" block-out at back of post can not be maintained, construct vegetation control flush with the back edge of post.
2. Where dike is constructed under railing, construct vegetation control to back edge of dike. Where paved shoulder is constructed within 36" in front of the post, construct vegetation control to the edge of paved shoulder.
3. For wood post sizes, see Revised Standard Plan RSP A77N1.
4. For steel post sizes, see Revised Standard Plan RSP A77N2.
5. For details not shown, see Revised Standard Plans RSP A77L1 and RSP A77L2.

STATE OF CALIFORNIA
DEPARTMENT OF TRANSPORTATION

MIDWEST GUARDRAIL SYSTEM TYPICAL VEGETATION CONTROL STANDARD RAILING SECTION

NO SCALE

RSP A77N5 DATED JULY 19, 2013 SUPPLEMENTS THE STANDARD PLANS BOOK DATED 2010.

REVISED STANDARD PLAN RSP A77N5

2010 REVISED STANDARD PLAN RSP A77N5

7-3-13

Dist	COUNTY	ROUTE	POST MILES TOTAL PROJECT	SHEET No.	TOTAL SHEETS
03	But	99	40.5/40.8	44	76

Randell D. Hiatt
REGISTERED CIVIL ENGINEER

July 19, 2013
PLANS APPROVAL DATE

REGISTERED PROFESSIONAL ENGINEER
Randell D. Hiatt
No. C50200
Exp. 6-30-15
CIVIL
STATE OF CALIFORNIA

THE STATE OF CALIFORNIA OR ITS OFFICERS OR AGENTS SHALL NOT BE RESPONSIBLE FOR THE ACCURACY OR COMPLETENESS OF SCANNED COPIES OF THIS PLAN SHEET.

TO ACCOMPANY PLANS DATED 10-13-14

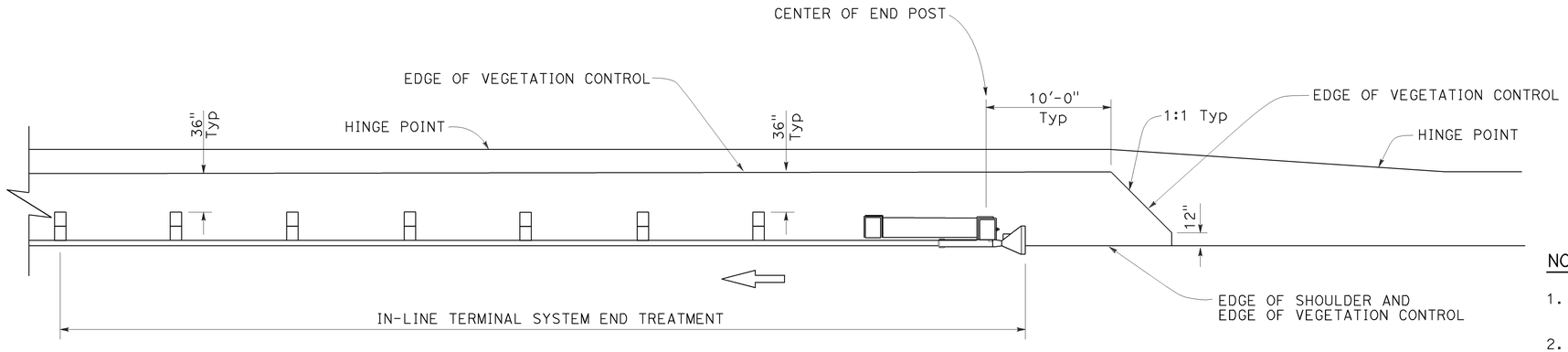

PLAN

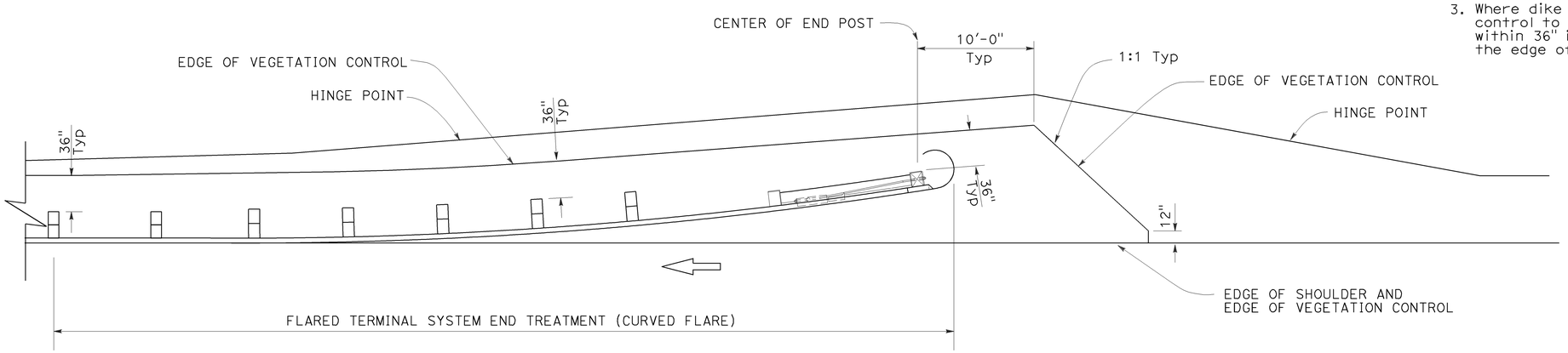

PLAN

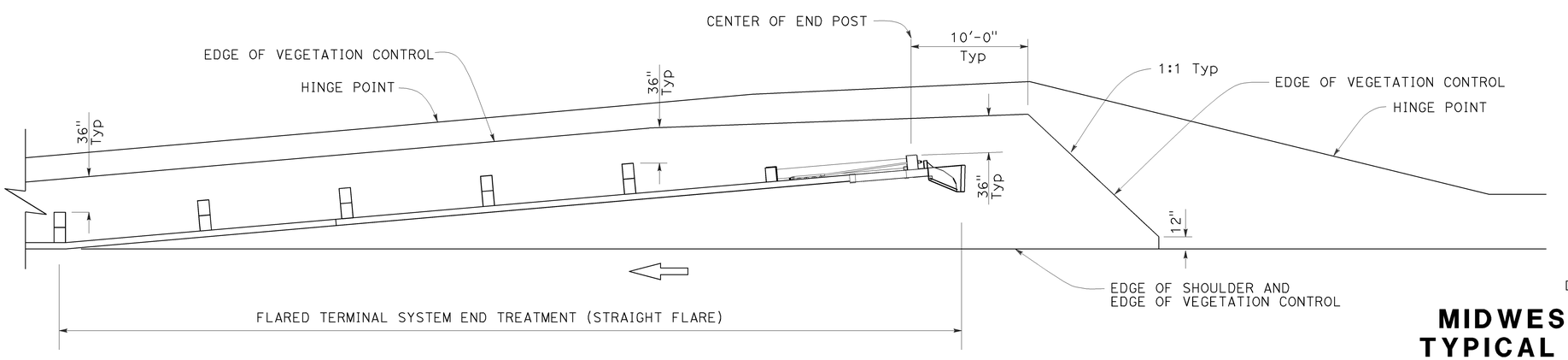

PLAN

NOTES:

1. See Revised Standard Plan RSP A77N5 for additional vegetation control details.
2. Where the distance between back of post and hinge point is less than 42", construct vegetation control to 6" from hinge point while maintaining the 8" block-out at back of post. If the 8" block-out at back of post can not be maintained, construct vegetation control flush with the back edge of post.
3. Where dike is constructed under railing, construct vegetation control to back edge of dike. Where paved shoulder is constructed within 36" in front of the post, construct vegetation control to the edge of paved shoulder.

STATE OF CALIFORNIA
DEPARTMENT OF TRANSPORTATION

MIDWEST GUARDRAIL SYSTEM TYPICAL VEGETATION CONTROL FOR TERMINAL SYSTEM END TREATMENTS

NO SCALE

RSP A77N6 DATED JULY 19, 2013 SUPPLEMENTS THE STANDARD PLANS BOOK DATED 2010.

REVISED STANDARD PLAN RSP A77N6

2010 REVISED STANDARD PLAN RSP A77N6

6-12-13

Dist	COUNTY	ROUTE	POST MILES TOTAL PROJECT	SHEET No.	TOTAL SHEETS
03	But	99	40.5/40.8	45	76

Randell D. Hiatt
REGISTERED CIVIL ENGINEER

July 19, 2013
PLANS APPROVAL DATE

REGISTERED PROFESSIONAL ENGINEER
Randell D. Hiatt
No. C50200
Exp. 6-30-15
CIVIL
STATE OF CALIFORNIA

THE STATE OF CALIFORNIA OR ITS OFFICERS OR AGENTS SHALL NOT BE RESPONSIBLE FOR THE ACCURACY OR COMPLETENESS OF SCANNED COPIES OF THIS PLAN SHEET.

TO ACCOMPANY PLANS DATED 10-13-14

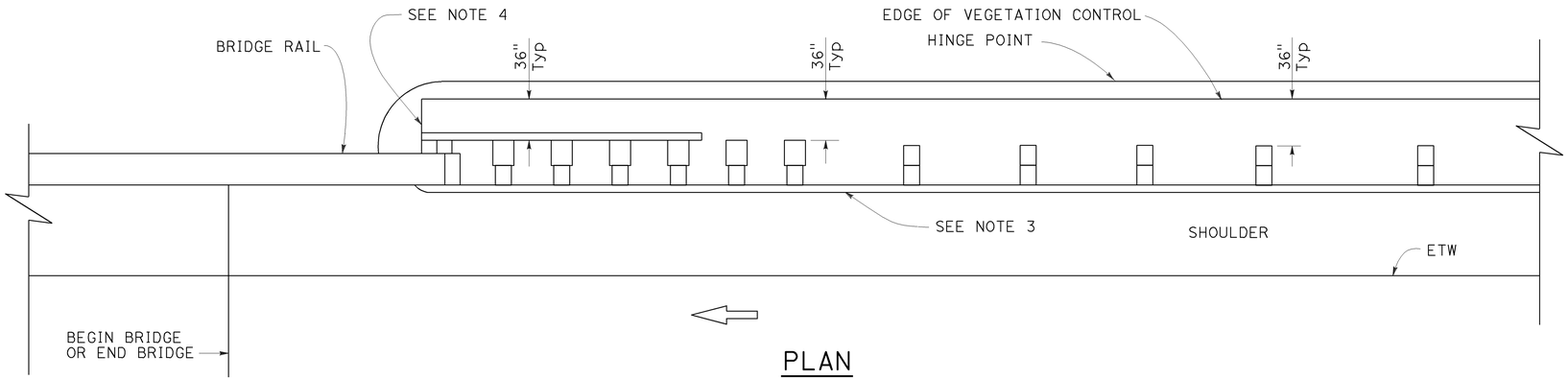

PLAN

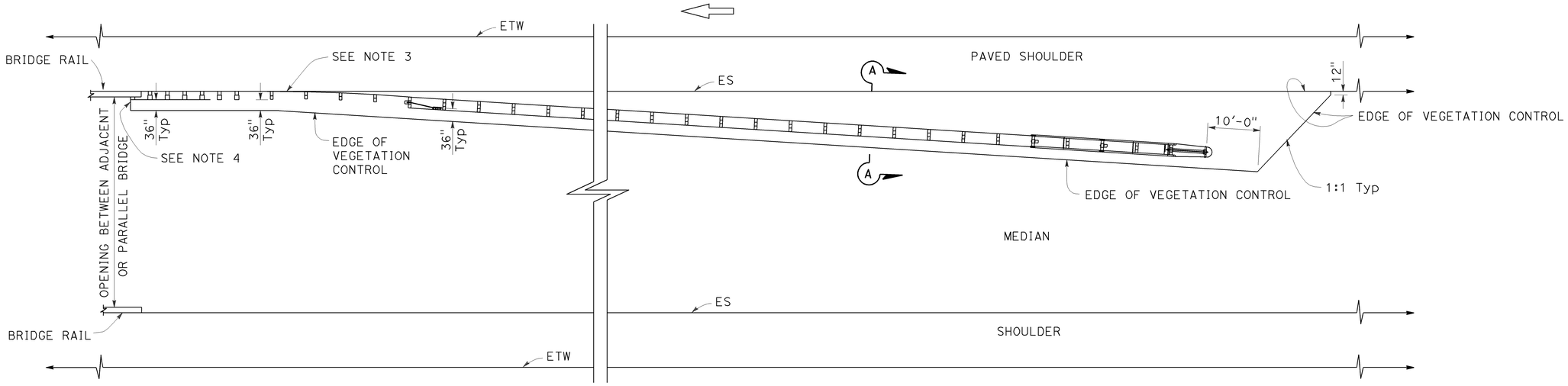

PLAN

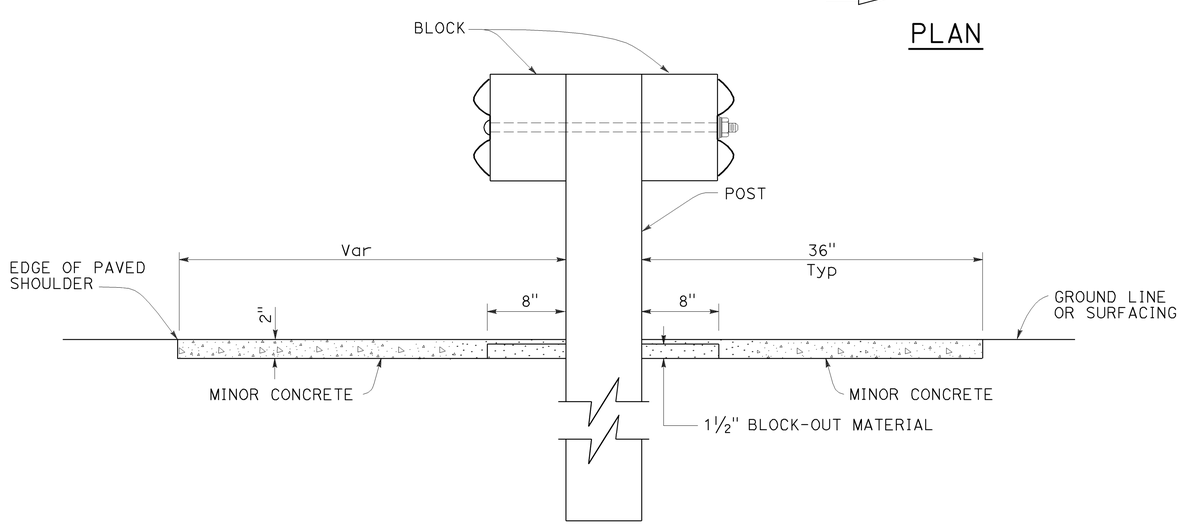

SECTION A-A

NOTES:

1. See Revised Standard Plan RSP A77N5 for additional vegetation control details.
2. Where the distance between back of post and hinge point is less than 42", construct vegetation control to 6" from hinge point while maintaining the 8" block-out at back of post. If the 8" block-out at back of post can not be maintained, construct vegetation control flush with the back edge of post.
3. Where dike is constructed under railing, construct vegetation control to back edge of dike. Where paved shoulder is constructed within 36" in front of the post, construct vegetation control to the edge of paved shoulder.
4. End vegetation control at end of backside rail element.

STATE OF CALIFORNIA
DEPARTMENT OF TRANSPORTATION

MIDWEST GUARDRAIL SYSTEM TYPICAL VEGETATION CONTROL AT STRUCTURE APPROACH

NO SCALE

RSP A77N7 DATED JULY 19, 2013 SUPPLEMENTS THE STANDARD PLANS BOOK DATED 2010.

REVISED STANDARD PLAN RSP A77N7

2010 REVISED STANDARD PLAN RSP A77N7

6-12-13

Dist	COUNTY	ROUTE	POST MILES TOTAL PROJECT	SHEET No.	TOTAL SHEETS
03	But	99	40.5/40.8	46	76

Randell D. Hiatt
REGISTERED CIVIL ENGINEER

July 19, 2013
PLANS APPROVAL DATE

REGISTERED PROFESSIONAL ENGINEER
Randell D. Hiatt
No. C50200
Exp. 6-30-15
CIVIL
STATE OF CALIFORNIA

THE STATE OF CALIFORNIA OR ITS OFFICERS OR AGENTS SHALL NOT BE RESPONSIBLE FOR THE ACCURACY OR COMPLETENESS OF SCANNED COPIES OF THIS PLAN SHEET.

TO ACCOMPANY PLANS DATED 10-13-14

2010 REVISED STANDARD PLAN RSP A77Q1

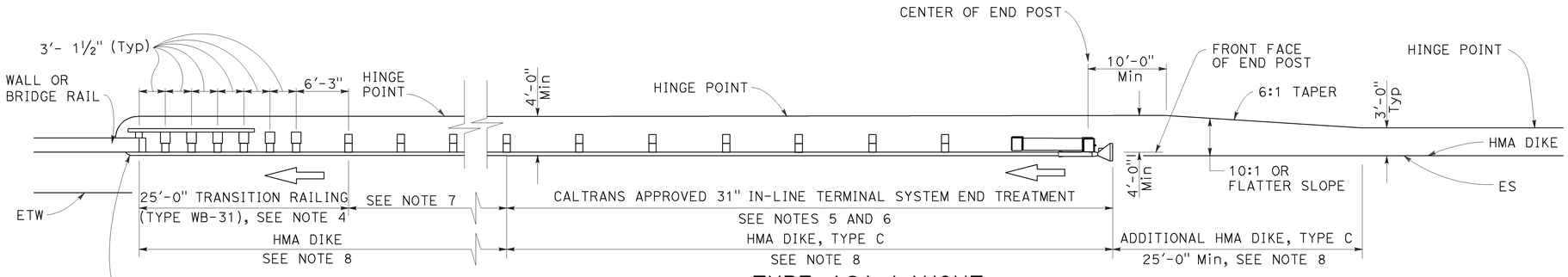

TYPE 12A LAYOUT

(MGS installation at structure approach with
31" In-line end treatment at traffic approach end of railing)
See Notes 9

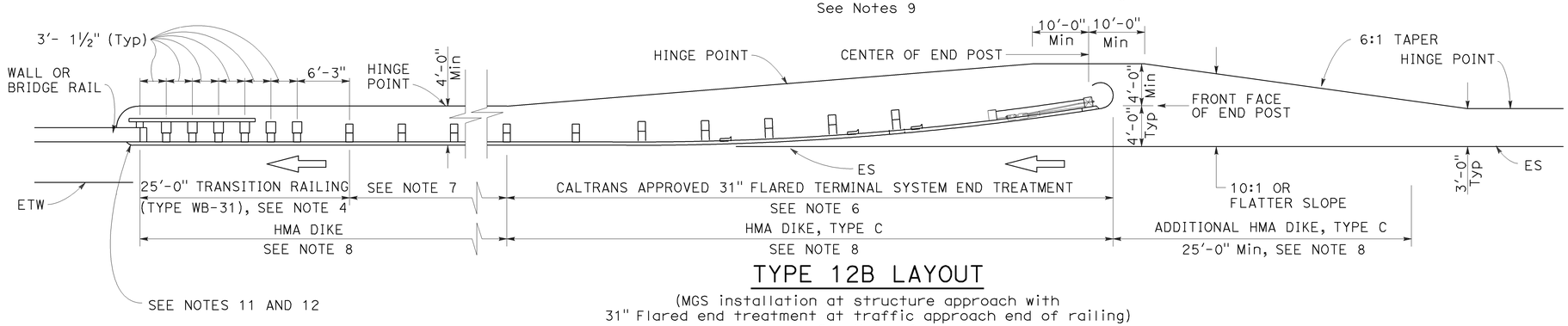

TYPE 12B LAYOUT

(MGS installation at structure approach with
31" Flared end treatment at traffic approach end of railing)
See Notes 9

NOTES:

1. Line post, blocks and hardware to be used are shown on Revised Standard Plans RSP A77L1, RSP A77L2, RSP A77M1, RSP A77N1 and RSP A77N2.
2. MGS post spacing to be 6'-3" center to center, except as otherwise noted.
3. Except as noted, line posts are 6" x 8" x 6'-0" wood with 6" x 12" x 1'-2" wood blocks. W6 x 8.5 or W6 x 9 steel posts, 6'-0" in length, with 6" x 12" x 1'-2" notched wood blocks or plastic blocks may be used for 6" x 8" x 6'-0" wood posts with 6" x 12" x 1'-2" wood blocks where applicable and when specified.
4. For Transition Railing (Type WB-31) details for Types 12A and 12B Layouts, see Revised Standard Plan RSP A77U4.
5. 31" in-line terminal system end treatments are used where site conditions will not accommodate a 31" flared end treatment.
6. The type 31" of terminal system end treatment to be used will be shown on the Project Plans.
7. Dependent on site conditions (embankment height, side slopes, or other fixed objects), it may be advisable to construct additional guard railing (a length equal to multiples of 12'-6" with 6'-3" post spacing) between the transition railing and end treatment. A 12.5 degree angle of departure can be drawn on the Project Plans from the edge of traveled way through the outer most point of the fixed object to determine the additional length of railing needed.
8. Where placement of dike is required with guard railing installations, see Revised Standard Plan RSP A77N4 for dike positioning details.
9. Type 12A or Type 12B Layouts are typically used:
   a. To the right of approaching traffic, at the end of a structure, on two-lane conventional highway where the roadbed width across the structure is less than 40 feet.
   b. To the left of approaching traffic, at the end of a structure, on two-lane conventional highway where the roadbed width across the structure is less than 40 feet.
   c. To the right of approaching traffic at the end of each structure on multilane freeways or expressways with separate adjacent or parallel bridges.
   d. To the right of approaching traffic at the end of the structure on multilane freeways or expressways with decked median on the bridge.
10. See Revised Standard Plan RSP A77Q3 for typical layout used left of approaching traffic at the ends of each structure on multilane freeways or expressways with separate adjacent or parallel bridges.
11. For additional details of typical connections to bridge rail, see Connection Detail AA on Revised Standard Plans RSP A77U1 and RSP A77U2 and Connection Detail FF on Revised Standard Plans RSP A77V1 and RSP A77V2.
12. For additional details of a typical connection to walls or abutments, see Revised Standard Plan RSP A77U3.

STATE OF CALIFORNIA
DEPARTMENT OF TRANSPORTATION

MIDWEST GUARDRAIL SYSTEM TYPICAL LAYOUTS FOR STRUCTURE APPROACH

NO SCALE

RSP A77Q1 DATED JULY 19, 2013 SUPPLEMENTS THE STANDARD PLANS BOOK DATED 2010.

REVISED STANDARD PLAN RSP A77Q1

Dist	COUNTY	ROUTE	POST MILES TOTAL PROJECT	SHEET No.	TOTAL SHEETS
03	But	99	40.5/40.8	47	76

Randell D. Hiatt
REGISTERED CIVIL ENGINEER

July 19, 2013
PLANS APPROVAL DATE

REGISTERED PROFESSIONAL ENGINEER
Randell D. Hiatt
No. C50200
Exp. 6-30-15
CIVIL
STATE OF CALIFORNIA

THE STATE OF CALIFORNIA OR ITS OFFICERS OR AGENTS SHALL NOT BE RESPONSIBLE FOR THE ACCURACY OR COMPLETENESS OF SCANNED COPIES OF THIS PLAN SHEET.

TO ACCOMPANY PLANS DATED 10-13-14

2010 REVISED STANDARD PLAN RSP A77Q4

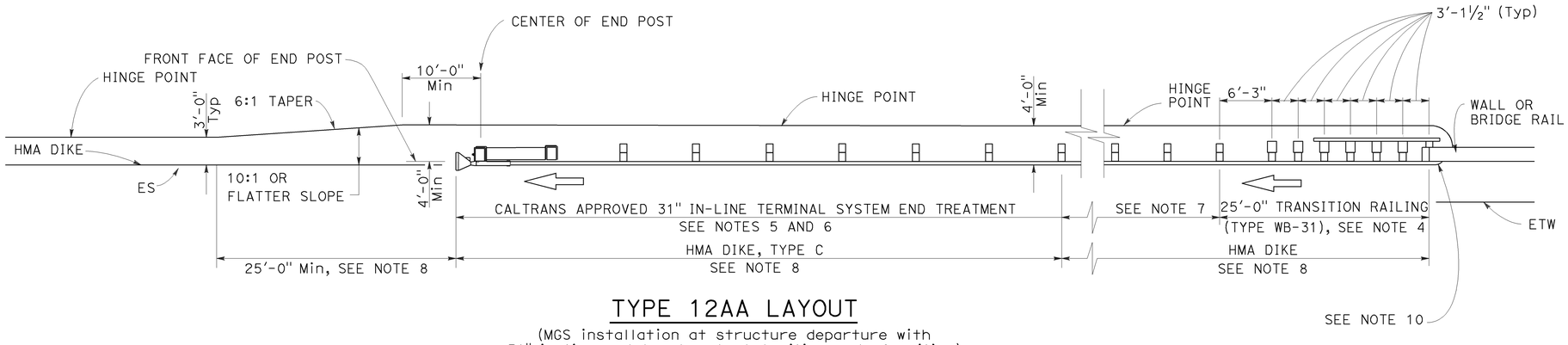

TYPE 12AA LAYOUT

(MGS installation at structure departure with
31" in-line end treatment at trailing end of railing)
See Notes 8 and 9

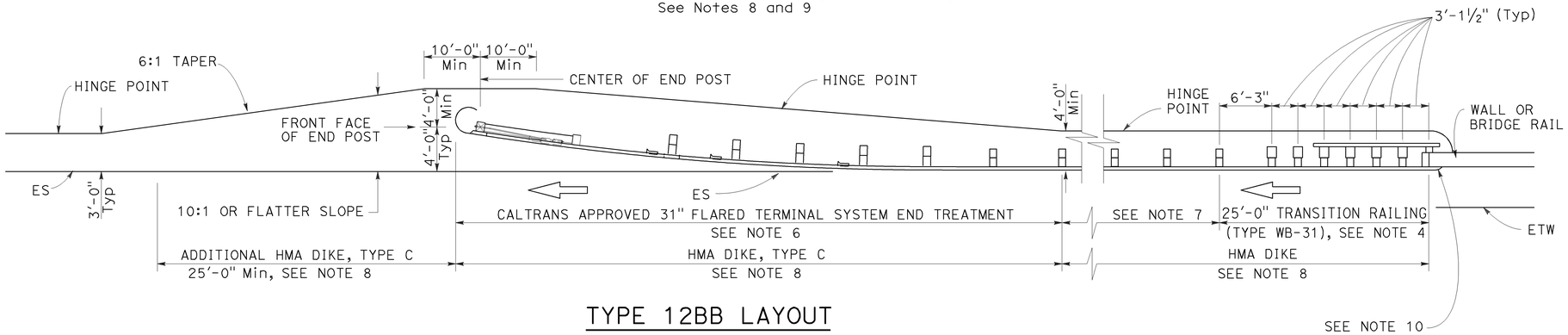

TYPE 12BB LAYOUT

(MGS installation at structure departure with
31" flared end treatment at trailing end of railing)
See Notes 8 and 9

NOTES:

1. Line post, blocks and hardware to be used are shown on Revised Standard Plans RSP A77L1, RSP A77L2, RSP A77M1, RSP A77N1 and RSP A77N2.
2. MGS post spacing to be 6'-3" center to center, except as otherwise noted.
3. Except as noted, line posts are 6" x 8" x 6'-0" wood with 6" x 12" x 1'-2" wood blocks. W6 x 8.5 or W6 x 9 steel posts, 6'-0" in length, with 6" x 12" x 1-2" notched wood blocks or notched recycled plastic blocks may be used for 6" x 8" x 6'-0" wood posts with 6" x 12" x 1'-2" wood blocks where applicable and when specified.
4. For Transition Railing (Type WB-31) details for Types 12AA and 12BB Layouts, see Revised Standard Plan RSP A77U4.
5. 31" in-line terminal system treatments are used where site conditions will not accommodate a 31" flared end treatment.
6. The type of 31" terminal system to be used will be shown on the Project Plans.
7. Dependent on site conditions (embankment height, side slopes, other fixed objects), it may be advisable to construct additional MGS (a length equal to multiples of 12'-6" with 6'-3" post spacing) between the transition railing and 31" end treatments.
8. Where placement of dike is required with MGS installations, see Revised Standard Plan RSP A77N4 for dike positioning details.
9. Type 12AA or Type 12BB Layouts are typically used to the right of traffic departing a structure on two-way conventional highways where the roadbed width across the structure is less than 40 feet.
10. For additional details of typical connections to bridge rail, see Connection Detail CC on Revised Standard Plan RSP A77U2 and Connection Detail HH on Revised Standard Plan RSP A77V2.

STATE OF CALIFORNIA
DEPARTMENT OF TRANSPORTATION

MIDWEST GUARDRAIL SYSTEM TYPICAL LAYOUTS FOR STRUCTURE DEPARTURE

NO SCALE

RSP A77Q4 DATED JULY 19, 2013 SUPPLEMENTS THE STANDARD PLANS BOOK DATED 2010.

REVISED STANDARD PLAN RSP A77Q4

6-19-13

Dist	COUNTY	ROUTE	POST MILES TOTAL PROJECT	SHEET No.	TOTAL SHEETS
03	But	99	40.5/40.8	48	76

Randell D. Hiatt
REGISTERED CIVIL ENGINEER

July 19, 2013
PLANS APPROVAL DATE

REGISTERED PROFESSIONAL ENGINEER
Randell D. Hiatt
No. C50200
Exp. 6-30-15
CIVIL
STATE OF CALIFORNIA

THE STATE OF CALIFORNIA OR ITS OFFICERS OR AGENTS SHALL NOT BE RESPONSIBLE FOR THE ACCURACY OR COMPLETENESS OF SCANNED COPIES OF THIS PLAN SHEET.

TO ACCOMPANY PLANS DATED 10-13-14

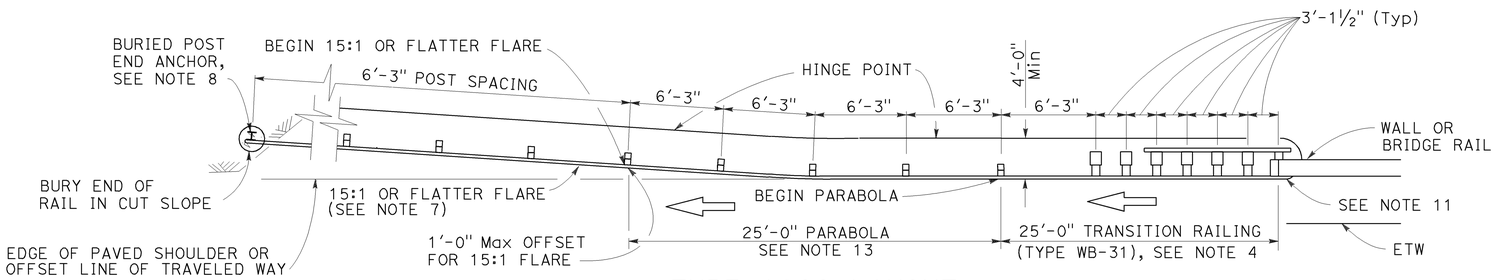

TYPE 12CC LAYOUT

(MGS installation at structure departure with a
Buried end anchor treatment at trailing end of railing)
See Notes 9 and 10

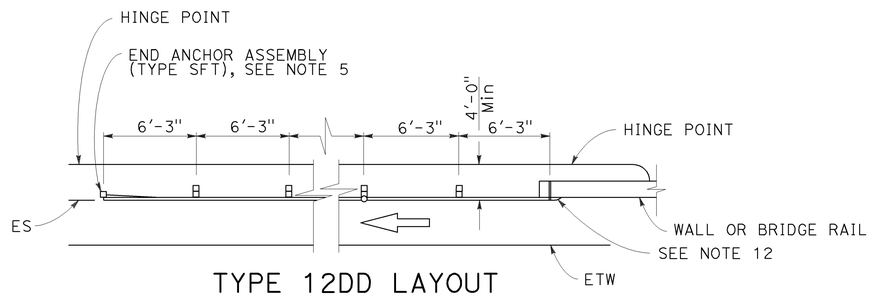

TYPE 12DD LAYOUT

(MGS installation at structure departure
With end anchor assembly at trailing end of railing)
See Notes 6 and 9

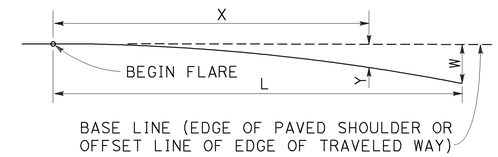

$$Y = \frac{WX^2}{L^2}$$

Y = OFFSET FROM BASE LINE
W = MAXIMUM OFFSET
X = DISTANCE ALONG BASE LINE
L = LENGTH OF FLARE

PARABOLIC FLARE OFFSETS

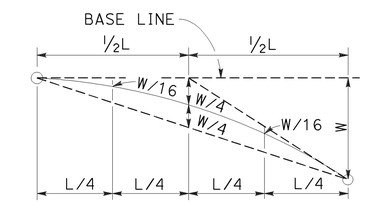

TYPICAL PARABOLIC LAYOUT

NOTES:

1. Line post, blocks and hardware to be used are shown on Revised Standard Plans RSP A77L1, RSP A77L2, RSP A77M1, RSP A77N1 and RSP A77N2.
2. MSG post spacing to be 6'-3" center to center, except as otherwise noted.
3. Except as noted, line posts are 6" x 8" x 6'-0" wood with 6" x 12" x 1'-2" wood blocks. W6 x 8.5 or W6 x 9 steel posts, 6'-0" in length, with 6" x 12" x 1'-2" notched wood blocks or notched recycled plastic blocks may be used for 6" x 8" x 6'-0" wood line posts with 6" x 12" x 1'-2" wood blocks where applicable and when specified.
4. For Transition Railing (Type WB-31) details for Type 12CC Layout, see Revised Standard Plan RSP A77U4.
5. For details of End Anchor Assembly (Type SFT) used with Type 12DD Layout, see Revised Standard Plan RSP A77S1.
6. Type 12DD layout is typically used to the right of traffic departing a structure on two-way conventional highways where the roadbed width across the structure is equal to or greater than 40 feet and MGS is recommended (embankment height, side slopes, other fixed objects). Length of railing to be equal to multiples of 12'-6". For MGS connection details to bridge rail, see Revised Standard Plans RSP A77U1 and RSP A77V1. For MGS connection details to wall, see Revised Standard Plan RSP A77U3.
7. The 15:1 or flatter flare for Type 12CC Layout is based on the edge of the paved shoulder or offset line of edge of the traveled way. The length of MGS within the 15:1 or flatter flare is based on site conditions and should be a length equal to multiples of 12'-6".
8. For details of the buried post end anchor used with Type 12CC Layout, see Revised Standard Plan RSP A77T2.
9. Where placement of dike is required with MGS installations, see Revised Standard Plan RSP A77N4 for dike positioning details.
10. Type 12CC Layout is typically used to the right of traffic departing a structure on two-way conventional highways where the roadbed width across the structure is less than 40 feet.
11. For additional details of a typical connection to bridge rail for Layout Type 12CC, see Connection Detail CC on Revised Standard Plan RSP A77U2 and Connection Detail HH on Revised Standard Plan RSP A77V2.
12. For additional details of a typical connection to bridge rail for Layout Type 12DD, see Connection Detail BB on Revised Standard Plan RSP A77U1 and Connection Detail GG on Revised Standard Plan RSP A77V1.
13. For typical flare offsets for 25'-0" length parabola with maximum offset of 1'-0", see Revised Standard Plan RSP A77P1.

STATE OF CALIFORNIA
DEPARTMENT OF TRANSPORTATION

MIDWEST GUARDRAIL SYSTEM TYPICAL LAYOUTS FOR STRUCTURE DEPARTURE

NO SCALE

RSP A77Q5 DATED JULY 19, 2013 SUPPLEMENTS THE STANDARD PLANS BOOK DATED 2010.

REVISED STANDARD PLAN RSP A77Q5

2010 REVISED STANDARD PLAN RSP A77Q5

6-20-13

Dist	COUNTY	ROUTE	POST MILES TOTAL PROJECT	SHEET No.	TOTAL SHEETS
03	But	99	40.5/40.8	49	76

Randell D. Hiatt
REGISTERED CIVIL ENGINEER

November 15, 2013
PLANS APPROVAL DATE

REGISTERED PROFESSIONAL ENGINEER
Randell D. Hiatt
No. C50200
Exp. 6-30-15
CIVIL
STATE OF CALIFORNIA

THE STATE OF CALIFORNIA OR ITS OFFICERS OR AGENTS SHALL NOT BE RESPONSIBLE FOR THE ACCURACY OR COMPLETENESS OF SCANNED COPIES OF THIS PLAN SHEET.

TO ACCOMPANY PLANS DATED 10-13-14

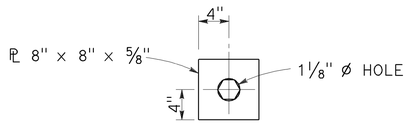

DETAIL "A"
CABLE CONNECTION
END PLATE

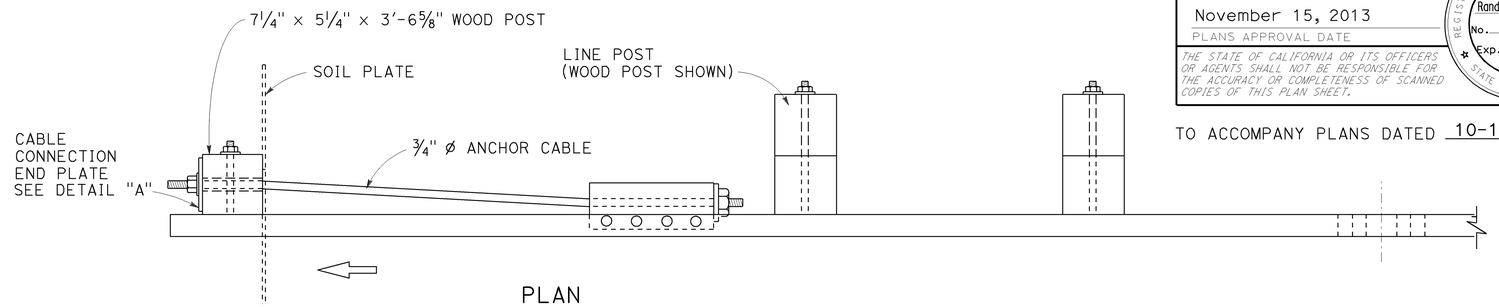

PLAN

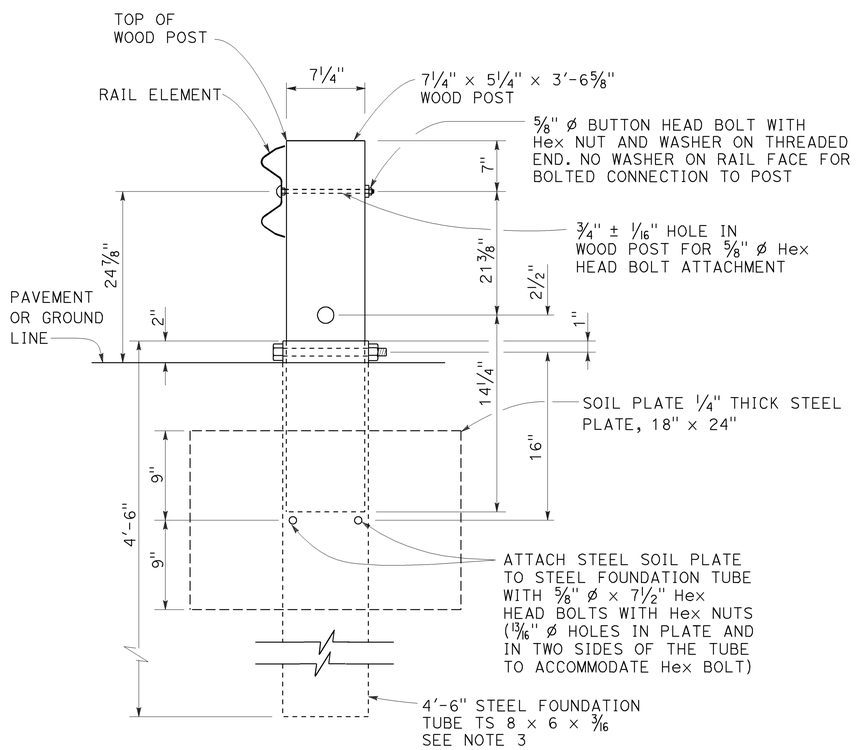

SECTION A-A

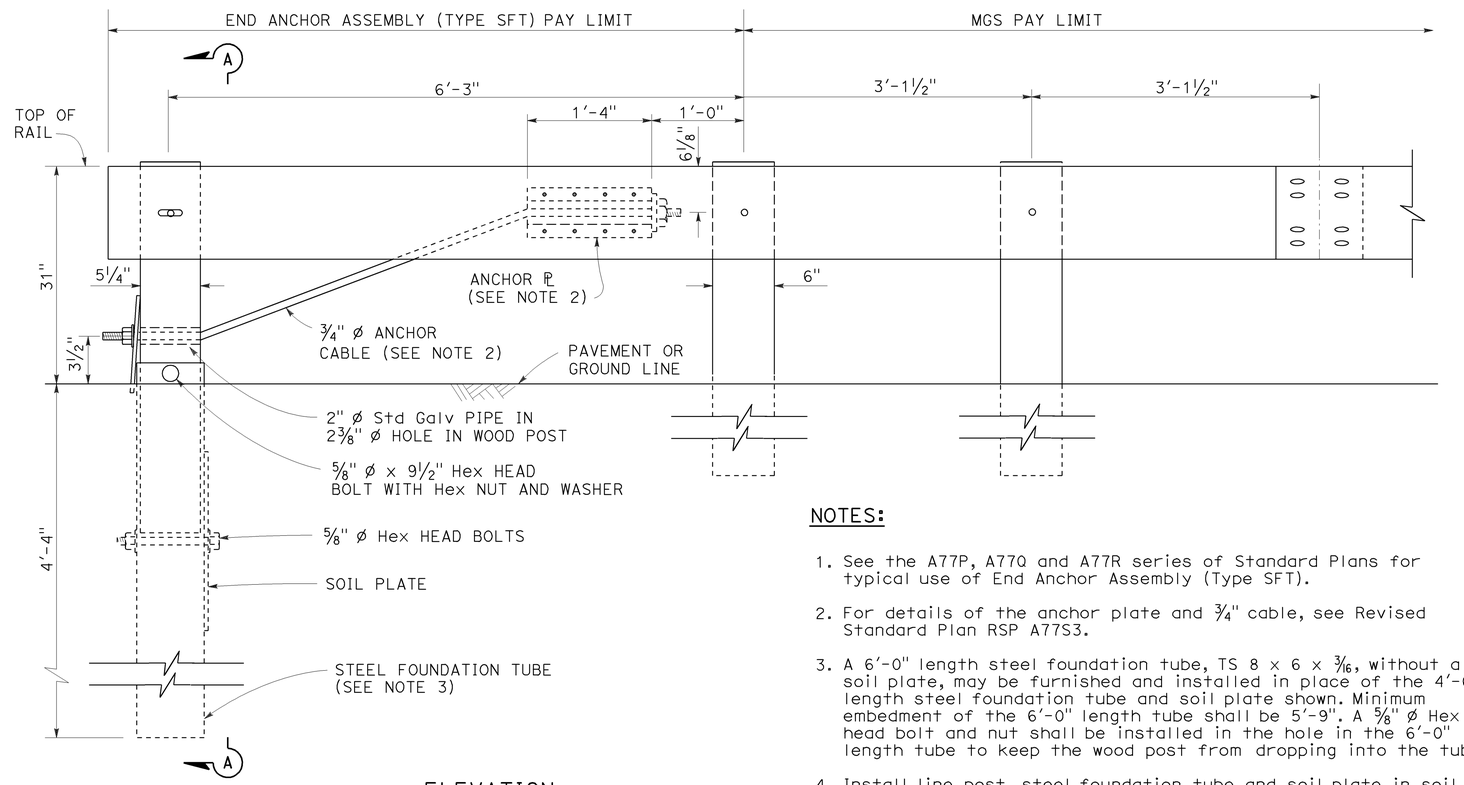

ELEVATION

END ANCHOR
ASSEMBLY (TYPE SFT)
See Note 1

NOTES:

1. See the A77P, A77Q and A77R series of Standard Plans for typical use of End Anchor Assembly (Type SFT).
2. For details of the anchor plate and 3/4" cable, see Revised Standard Plan RSP A77S3.
3. A 6'-0" length steel foundation tube, TS 8 x 6 x 3/16, without a soil plate, may be furnished and installed in place of the 4'-6" length steel foundation tube and soil plate shown. Minimum embedment of the 6'-0" length tube shall be 5'-9". A 5/8" ø Hex head bolt and nut shall be installed in the hole in the 6'-0" length tube to keep the wood post from dropping into the tube.
4. Install line post, steel foundation tube and soil plate in soil.

STATE OF CALIFORNIA
DEPARTMENT OF TRANSPORTATION

MIDWEST GUARDRAIL SYSTEM END ANCHOR ASSEMBLY (TYPE SFT)

NO SCALE

RSP A77S1 DATED NOVEMBER 15, 2013 SUPERSEDES RSP A77S1
DATED JULY 19, 2013 THAT SUPPLEMENTS THE STANDARD PLANS BOOK DATED 2010.

REVISED STANDARD PLAN RSP A77S1

2010 REVISED STANDARD PLAN RSP A77S1

10-4-13

Dist	COUNTY	ROUTE	POST MILES TOTAL PROJECT	SHEET No.	TOTAL SHEETS
03	But	99	40.5/40.8	50	76

Randell D. Hiatt
REGISTERED CIVIL ENGINEER

November 15, 2013
PLANS APPROVAL DATE

REGISTERED PROFESSIONAL ENGINEER
Randell D. Hiatt
No. C50200
Exp. 6-30-15
CIVIL
STATE OF CALIFORNIA

THE STATE OF CALIFORNIA OR ITS OFFICERS OR AGENTS SHALL NOT BE RESPONSIBLE FOR THE ACCURACY OR COMPLETENESS OF SCANNED COPIES OF THIS PLAN SHEET.

TO ACCOMPANY PLANS DATED 10-13-14

NOTE:

See Revised Standard Plans RSP A77S1, RSP A77S2 and RSP A77T1 for typical use of anchor cable and anchor plate.

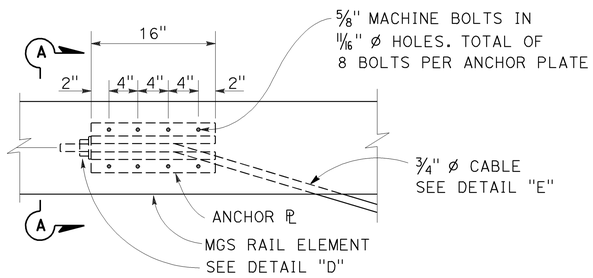

ANCHOR PLATE DETAIL

(MGS shown, TBB similar)

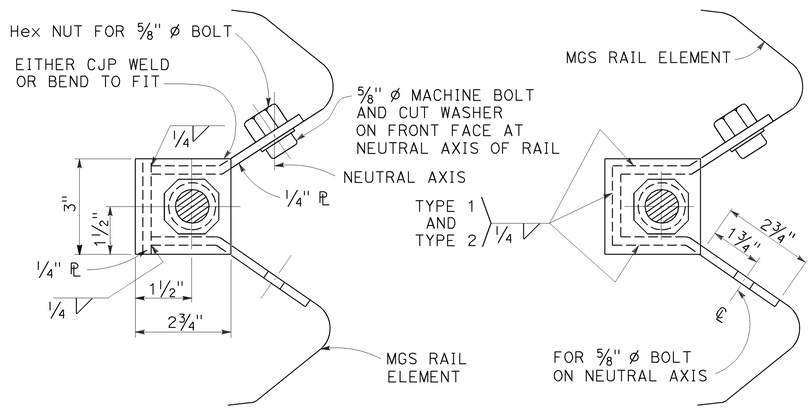

NOTE:

Dimensioning applies to both types.

SECTION A-A
(ALTERNATIVE TYPE 1)

SECTION A-A
(ALTERNATIVE TYPE 2)

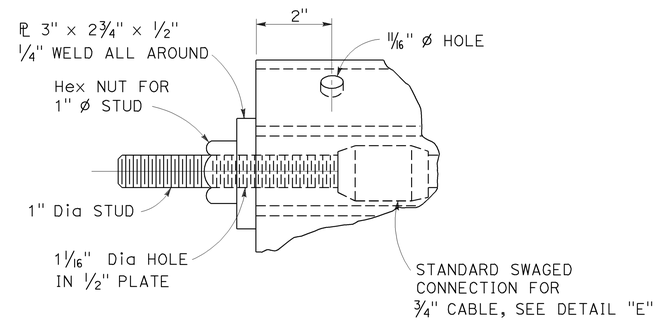

DETAIL "D"

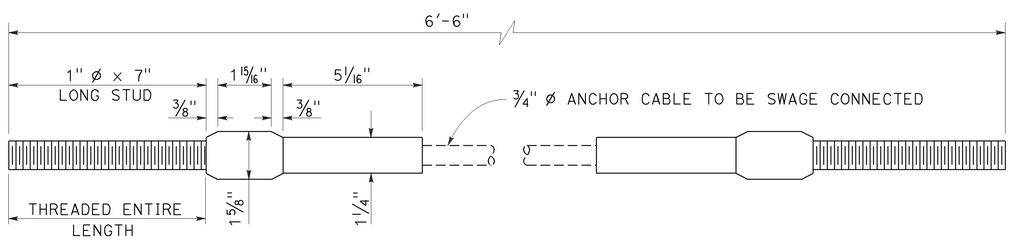

ANCHOR CABLE WITH SWAGED FITTING AND STUD

DETAIL "E"

STATE OF CALIFORNIA
DEPARTMENT OF TRANSPORTATION

METAL RAILING ANCHOR CABLE AND ANCHOR PLATE DETAILS

NO SCALE

RSP A77S3 DATED NOVEMBER 15, 2013 SUPERSEDES RSP A77S3 DATED JULY 19, 2013 THAT SUPPLEMENTS THE STANDARD PLANS BOOK DATED 2010.

REVISED STANDARD PLAN RSP A77S3

2010 REVISED STANDARD PLAN RSP A77S3

10-4-13

Dist	COUNTY	ROUTE	POST MILES TOTAL PROJECT	SHEET No.	TOTAL SHEETS
03	But	99	40.5/40.8	51	76

Randell D. Hiatt
REGISTERED CIVIL ENGINEER

July 19, 2013
PLANS APPROVAL DATE

REGISTERED PROFESSIONAL ENGINEER
Randell D. Hiatt
No. C50200
Exp. 6-30-15
CIVIL
STATE OF CALIFORNIA

THE STATE OF CALIFORNIA OR ITS OFFICERS OR AGENTS SHALL NOT BE RESPONSIBLE FOR THE ACCURACY OR COMPLETENESS OF SCANNED COPIES OF THIS PLAN SHEET.

TO ACCOMPANY PLANS DATED 10-13-14

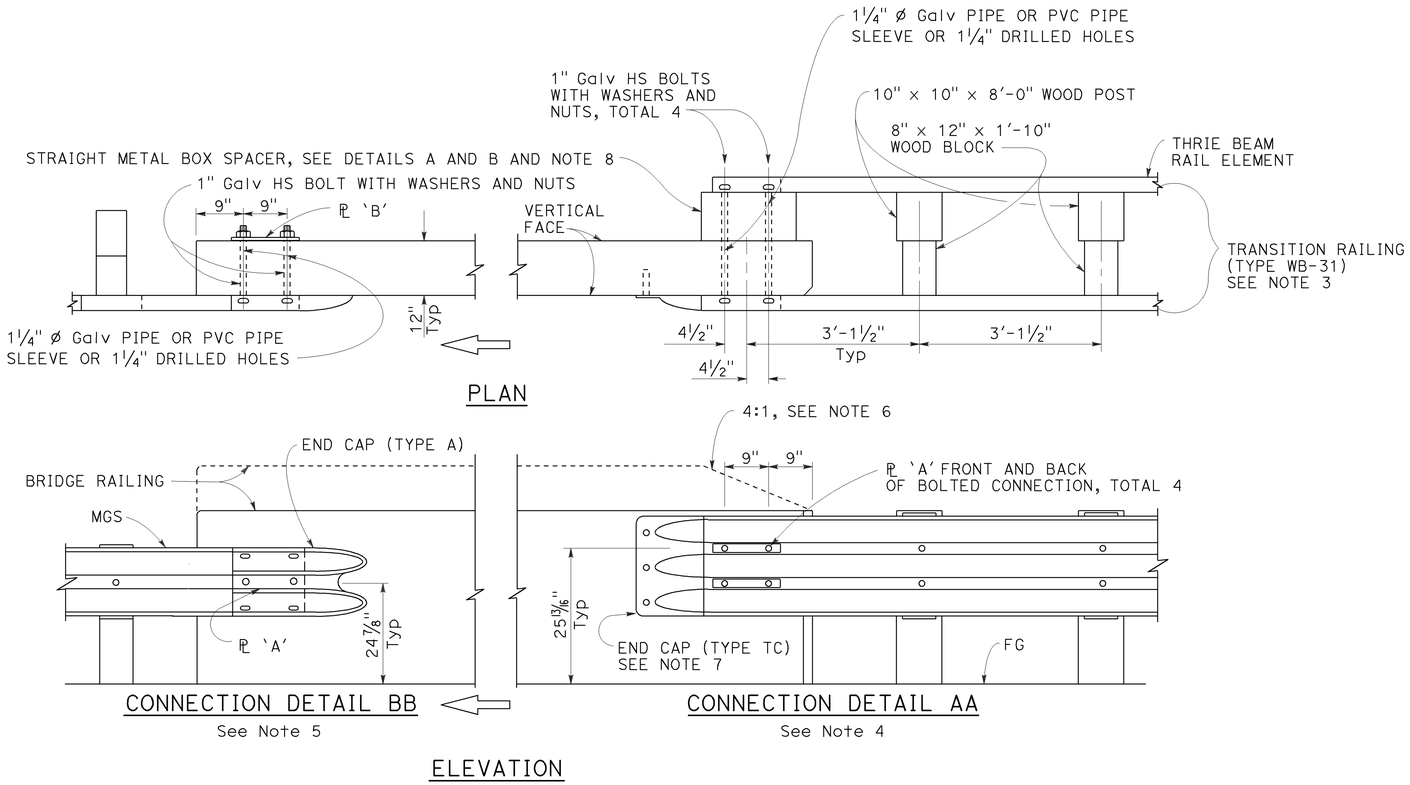

MIDWEST GUARDRAIL SYSTEM CONNECTION TO BRIDGE RAILING WITHOUT SIDEWALK

NOTES:

1. See Revised Standard Plan RSP A77U2 for additional connection details to bridges without sidewalks.
2. Additional details of posts, blocks and hardware are shown on Revised Standard Plans RSP A77M1, RSP A77N1 and RSP A77N2.
3. For additional details of Transition Railing (Type WB-31), see Revised Standard Plan RSP A77U4. Transition Railing (Type WB-31) transitions the 12 gauge MGS railing section to a heavier gage nested thrie beam railing section which is connected to the concrete bridge railing.
4. For typical use of Connection Detail AA, see Layout Types 12A and 12B on Revised Standard Plan RSP A77Q1, Layout Types 12C and 12D on Revised Standard Plan RSP A77Q2, and Layout Type 12E on Revised Standard Plan RSP A77Q3.
5. For typical use of Connection Detail BB, see Layout Type 12D (structure departure railing connection) on Revised Standard Plan RSP A77Q2 and Layout Type 12DD on Revised Standard Plan RSP A77Q5.
6. Where the height of the bridge railing exceeds the height of the thrie beam railing by more than 1" at Connection Detail AA, taper the top of the end of the bridge railing at 4:1 to match the top elevation of the thrie beam rail.
7. For details of End Cap (Type TC), see Revised Standard Plan RSP A77U4.
8. See Revised Standard Plan RSP A77U4 for additional details regarding depth dimension for straight metal box spacer.

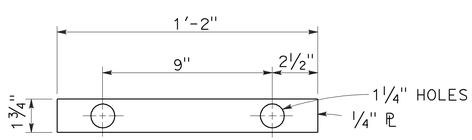

PLATE 'A'

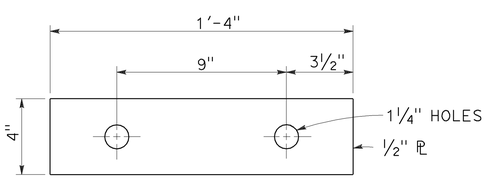

PLATE 'B'
(For backside of connection BB)

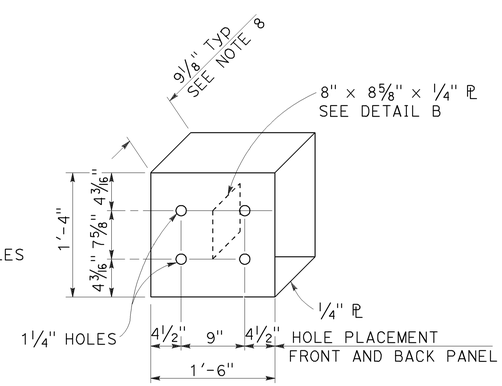

DETAIL A

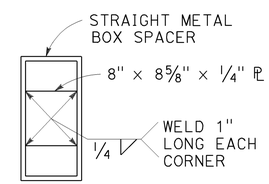

DETAIL B

STRAIGHT METAL BOX SPACER

STATE OF CALIFORNIA
DEPARTMENT OF TRANSPORTATION

MIDWEST GUARDRAIL SYSTEM CONNECTIONS TO BRIDGE RAILINGS WITHOUT SIDEWALKS DETAILS No. 1

NO SCALE

RSP A77U1 DATED JULY 19, 2013 SUPPLEMENTS THE STANDARD PLANS BOOK DATED 2010.

REVISED STANDARD PLAN RSP A77U1

2010 REVISED STANDARD PLAN RSP A77U1

7-8-13

Dist	COUNTY	ROUTE	POST MILES TOTAL PROJECT	SHEET No.	TOTAL SHEETS
03	But	99	40.5/40.8	52	76

Randell D. Hiatt
REGISTERED CIVIL ENGINEER

July 19, 2013
PLANS APPROVAL DATE

REGISTERED PROFESSIONAL ENGINEER
Randell D. Hiatt
No. C50200
Exp. 6-30-15
CIVIL
STATE OF CALIFORNIA

THE STATE OF CALIFORNIA OR ITS OFFICERS OR AGENTS SHALL NOT BE RESPONSIBLE FOR THE ACCURACY OR COMPLETENESS OF SCANNED COPIES OF THIS PLAN SHEET.

TO ACCOMPANY PLANS DATED 10-13-14

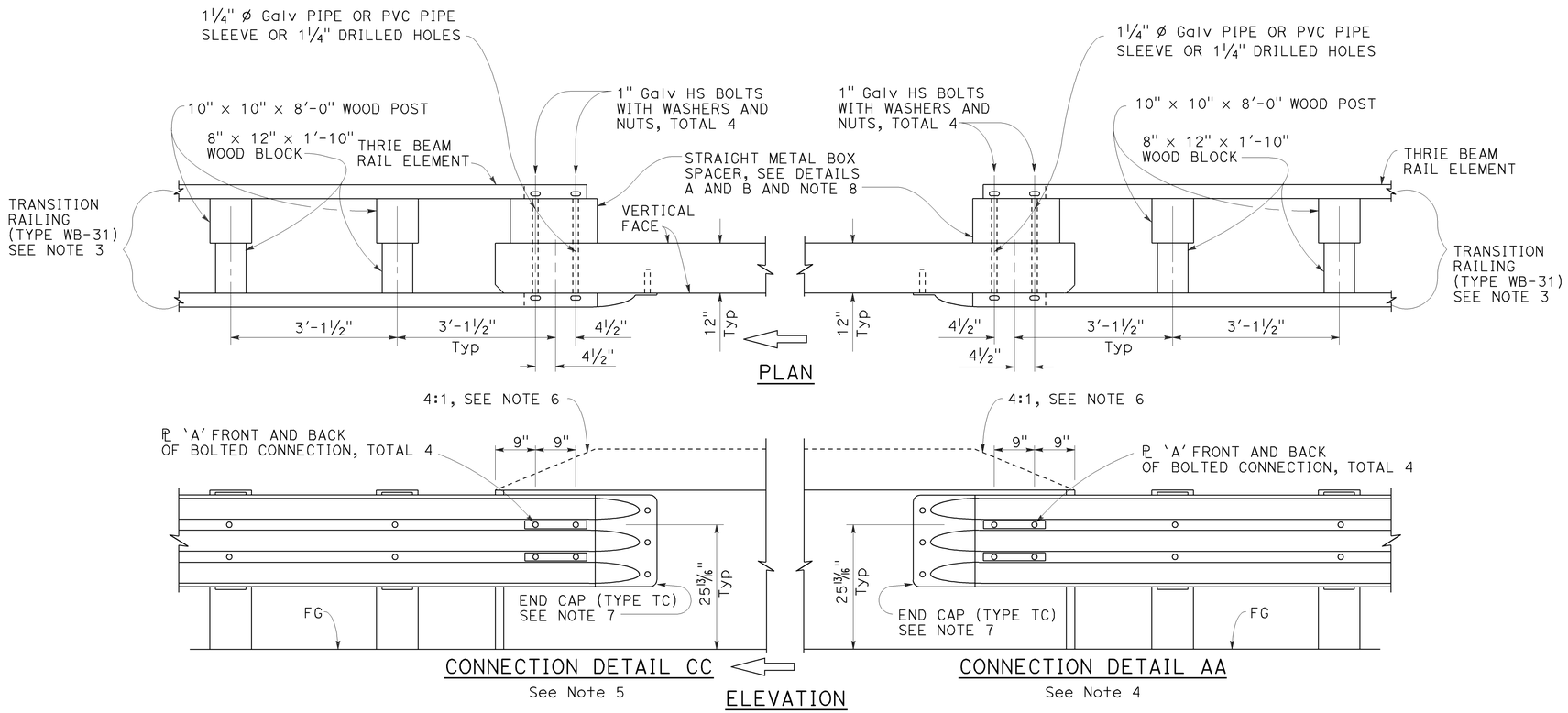

MIDWEST GUARDRAIL SYSTEM CONNECTION TO BRIDGE RAILING WITHOUT SIDEWALK

NOTES:

1. See Revised Standard Plan RSP A77U1 for additional connection details to bridges without sidewalks.
2. Additional details of posts, blocks and hardware are shown on Revised Standard Plans RSP A77M1, RSP A77N1 and RSP A77N2.
3. For additional details of Transition Railing (Type WB-31), see Revised Standard Plan RSP A77U4. Transition Railing (Type WB-31) transitions the 12 gauge MGS railing section to a heavier gage nested thrie beam railing section which is connected to the concrete bridge railing.
4. For typical use of Connection Detail AA, see Layout Types 12A and 12B on Revised Standard Plan RSP A77Q1, Layout Types 12C and 12D on Revised Standard Plan RSP A77Q2, and Layout Type 12E on Revised Standard Plan RSP A77Q3.
5. For typical use of Connection Detail CC, see Layout Types 12AA and 12BB on Revised Standard Plan RSP A77Q4 and Layout Type 12CC on Revised Standard Plan RSP A77Q5.
6. Where the height of the bridge railing exceeds the height of the thrie beam railing by more than 1" at Connection Detail AA and connection Detail CC, taper the top of the end of the bridge railing at 4:1 to match the top elevation of the thrie beam railing.
7. For details of End Cap (Type TC), see Revised Standard Plan RSP A77U4.
8. See Revised Standard Plan RSP A77U4 for additional details regarding depth dimension for straight metal box spacer.

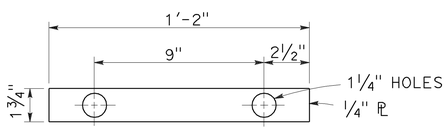

PLATE 'A'

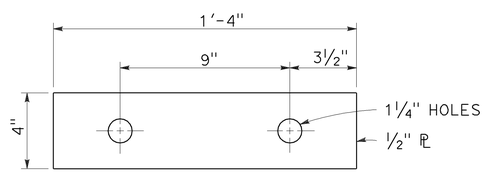

PLATE 'B'
(For backside of connection BB)

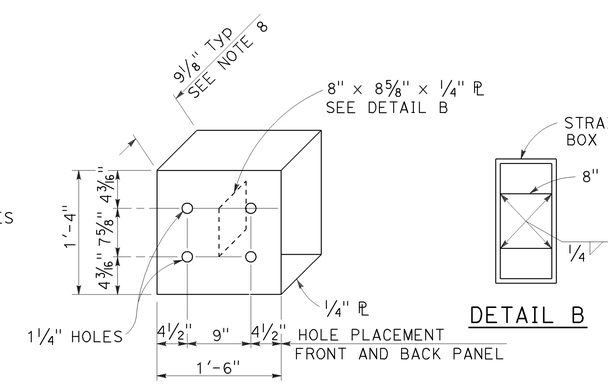

DETAIL A

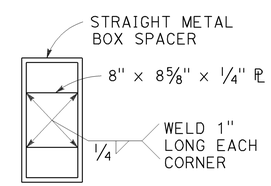

DETAIL B

STRAIGHT METAL BOX SPACER

STATE OF CALIFORNIA
DEPARTMENT OF TRANSPORTATION

MIDWEST GUARDRAIL SYSTEM CONNECTIONS TO BRIDGE RAILINGS WITHOUT SIDEWALKS DETAILS No. 2

NO SCALE

RSP A77U2 DATED JULY 19, 2013 SUPPLEMENTS THE STANDARD PLANS BOOK DATED 2010.

REVISED STANDARD PLAN RSP A77U2

2010 REVISED STANDARD PLAN RSP A77U2

6-20-13

Dist	COUNTY	ROUTE	POST MILES TOTAL PROJECT	SHEET No.	TOTAL SHEETS
03	But	99	40.5/40.8	53	76

Randell D. Hiatt
REGISTERED CIVIL ENGINEER

November 15, 2013
PLANS APPROVAL DATE

REGISTERED PROFESSIONAL ENGINEER
Randell D. Hiatt
No. C50200
Exp. 6-30-15
CIVIL
STATE OF CALIFORNIA

THE STATE OF CALIFORNIA OR ITS OFFICERS OR AGENTS SHALL NOT BE RESPONSIBLE FOR THE ACCURACY OR COMPLETENESS OF SCANNED COPIES OF THIS PLAN SHEET.

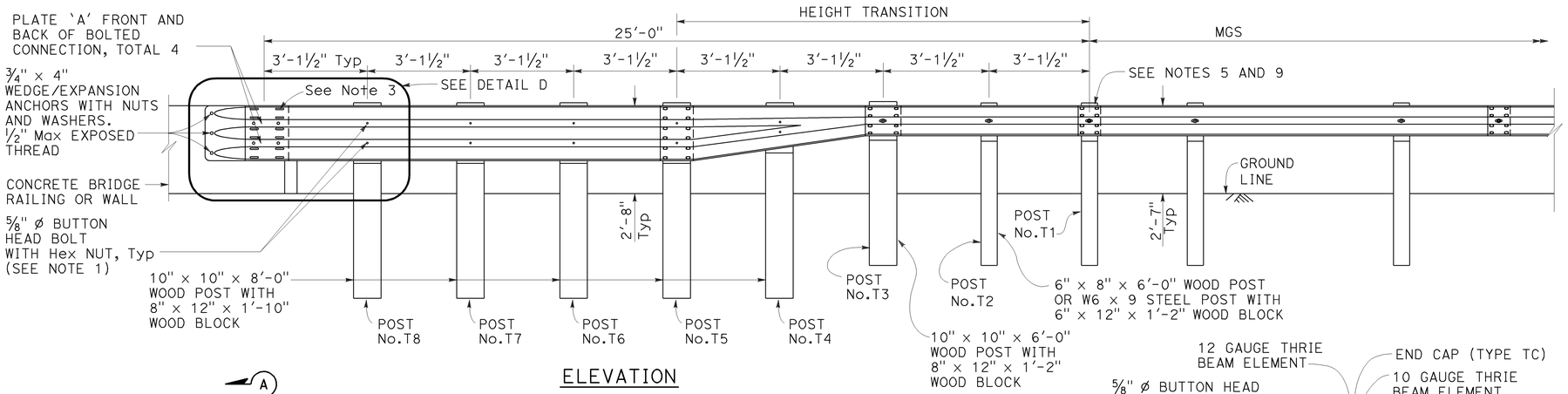

ELEVATION

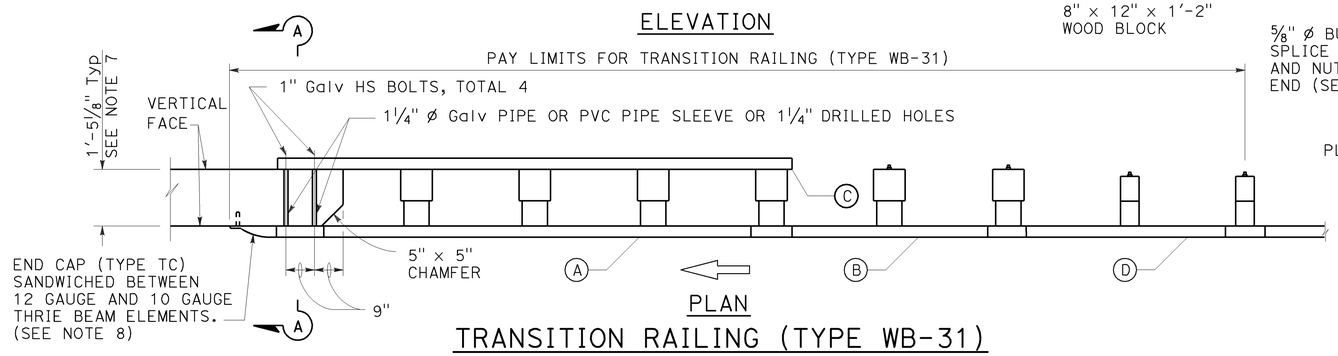

PLAN

TRANSITION RAILING (TYPE WB-31)

(No Blockout Attachment)

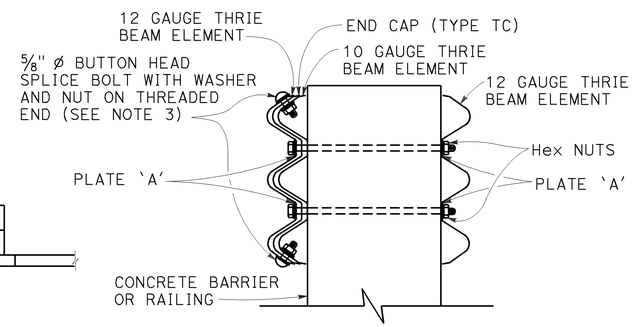

SECTION A-A

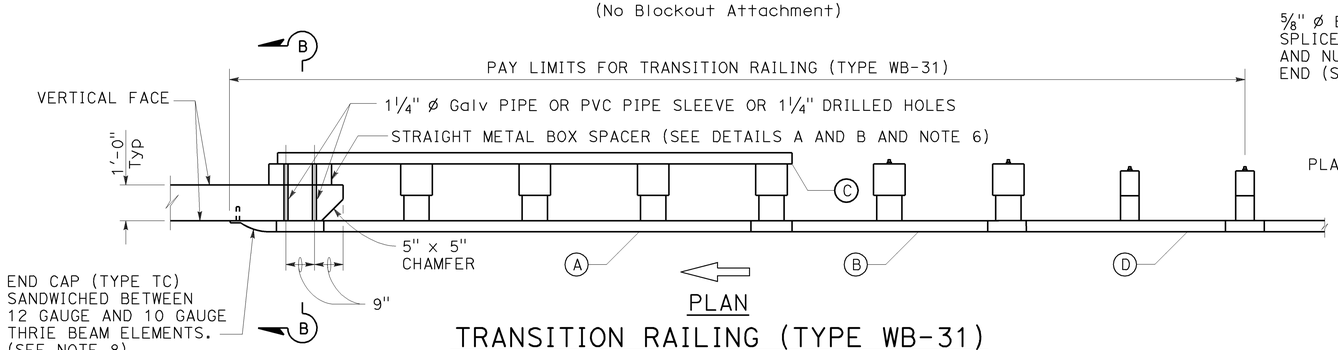

PLAN

TRANSITION RAILING (TYPE WB-31)

(Blockout Attachment)

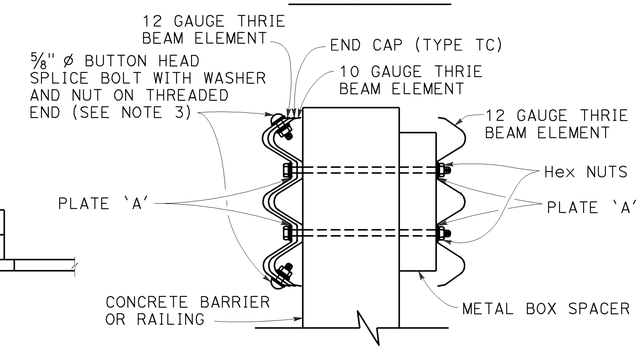

SECTION B-B

LEGEND:

(A) NESTED THRIE BEAM ELEMENTS (ONE 12 GAUGE ELEMENT NESTED OVER ONE 10 GAUGE ELEMENT).

(B) ONE ASYMMETRICAL 10 GAUGE "W" BEAM TO THRIE BEAM ELEMENT.

(C) ONE 12 GAUGE THRIE BEAM ELEMENT.

(D) ONE 10 GAUGE "W" BEAM RAIL ELEMENT (7'-3 1/2"LENGTH)

10 GAUGE = 0.138" THICK
12 GAUGE = 0.108" THICK

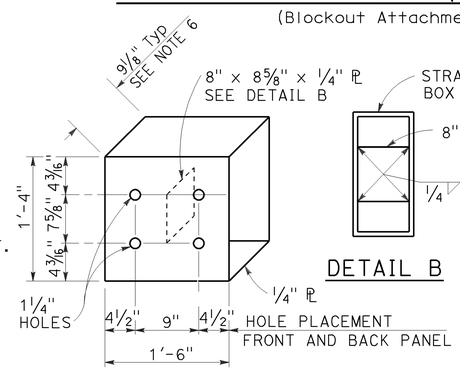

DETAIL A

STRAIGHT METAL BOX SPACER

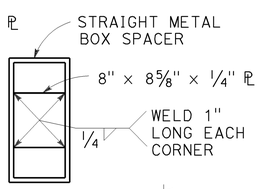

DETAIL B

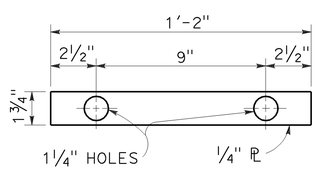

DETAIL C

PLATE 'A'

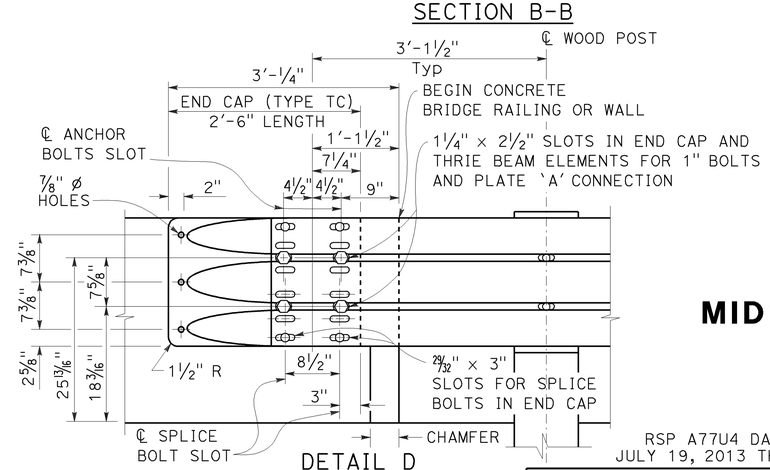

DETAIL D

NOTES:

TO ACCOMPANY PLANS DATED 10-13-14

1. Use 5/8" ø Button head bolts and hex nuts for connections to posts. No washer on rail face for bolted connections to post.

2. The nested rail elements, end cap, and 'W' beam to thrie beam element may be spliced together prior to bolting the elements to the wood post and concrete barrier or railing.

3. Exterior splice bolt holes for rail element splices at Post No. T5 and the connection to the concrete barrier or railing shall be the standard 29/32" x 1 1/8" slot size. Interior splice bolt holes at these locations may be increased up to 1 1/4" ø. Only the top 4 and the bottom 4 splice bolts with washers and nuts are required for rail splices at Post No. T5 and the connection to the concrete barrier or railing.

4. The top elevation of Posts No. T2 through No. T7 shall not project more than 1" above the top elevation of the rail element.

5. Typically, the railing connected to Transition Railing (Type WB-31) will be either standard railing section of MGS with height transition ratio of 150:1 or a Caltrans approved 31" end treatment attached to Post No. T1.

6. The depth of the metal box spacer varies from the 9 1/8" to 1 1/2" and is dependent on the width of the concrete railing or wall. The combined dimension for the depth of the metal box spacer plus the width of railing or wall is typically 21 1/8". Where the space between the backside of the concrete railing or wall and the rear thrie beam element is less than 1 1/2", metal plates similar to Plate 'A' are to be used as spacers.

7. Where the width of the concrete railing or wall is greater than 17 1/8", wood blocks are to be used to fill the space created between the backside of Posts No. T5 through No. T8 and the rear thrie beam element. These wood blocks shall be 8" in width and 1'-2" in length. The dimension between the front thrie beam element and the rear thrie beam element is to match the width of the concrete railing or wall.

8. End cap may be installed over 12 gauge and 10 gauge thrie beam elements where transition railing is installed on the departure end of bridge railing.

9. Conform standard railing section height to 31" at Post No. T1 using height transition ratio of 150:1.

STATE OF CALIFORNIA
DEPARTMENT OF TRANSPORTATION

MIDWEST GUARDRAIL SYSTEM TRANSITION RAILING (TYPE WB-31)

NO SCALE

RSP A77U4 DATED NOVEMBER 15, 2013 SUPERSEDES RSP A77U4 DATED JULY 19, 2013 THAT SUPPLEMENTS THE STANDARD PLANS BOOK DATED 2010.

REVISED STANDARD PLAN RSP A77U4

2010 REVISED STANDARD PLAN RSP A77U4

10-4-13

Dist	COUNTY	ROUTE	POST MILES TOTAL PROJECT	SHEET No.	TOTAL SHEETS
03	But	99	40.5/40.8	54	76

REGISTERED CIVIL ENGINEER

July 19, 2013
PLANS APPROVAL DATE

REGISTERED PROFESSIONAL ENGINEER
Michael Janzen
No. 44788
Exp. 03-31-14
CIVIL
STATE OF CALIFORNIA

THE STATE OF CALIFORNIA OR ITS OFFICERS OR AGENTS SHALL NOT BE RESPONSIBLE FOR THE ACCURACY OR COMPLETENESS OF SCANNED COPIES OF THIS PLAN SHEET.

TO ACCOMPANY PLANS DATED 10-13-14

2010 REVISED STANDARD PLAN RSP A87B

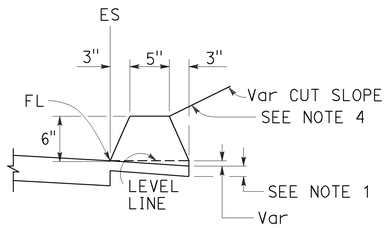

TYPE A
See Note 3

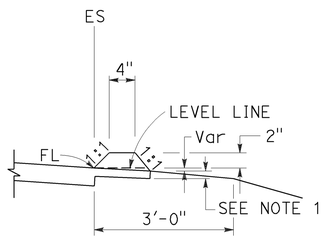

TYPE C

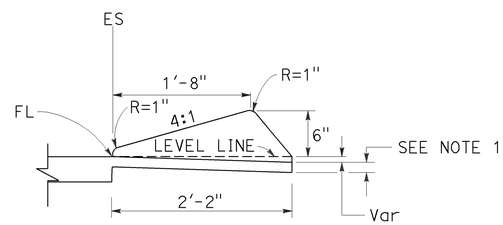

TYPE D

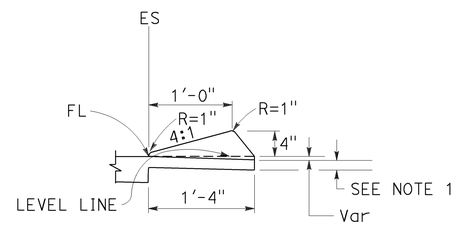

TYPE E

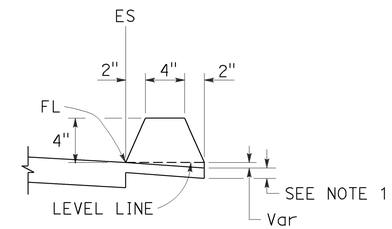

TYPE F
See Note 5

DIKES

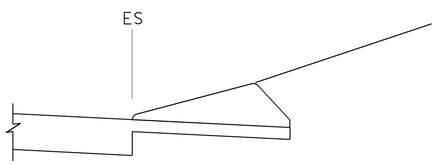

CASE C-1
Cut Slope

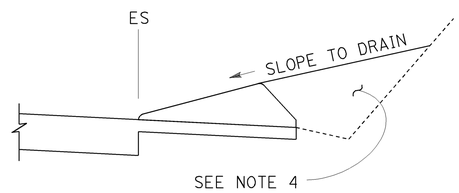

CASE C-2
Cut Slope

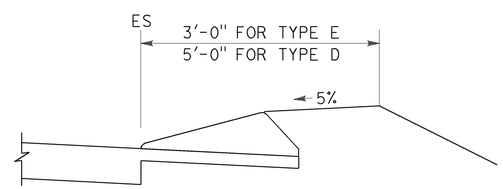

CASE F

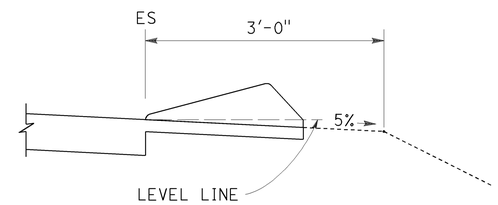

CASE R
See Note 2

TYPE D AND E BACKFILL DETAILS

NOTES:

1. For HMA shoulders only, extend top layer of HMA placed on the shoulder under dike with no joint at the ES. For projects with OGFC shoulders, do not extend OGFC under dike. See project plans for modified dike detail.
2. Case R applies to retrofit only projects where restrictive conditions do not provide enough width for Case F backfill.
3. Type A dike only to be used where restrictive slope conditions do not provide enough width to use Type D or Type E dike.
4. Fill and compact with excavated material to top of dike.
5. Use Type F dike, where dike is required with guard railing installations. See Revised Standard Plan RSP A77N4 for dike positioning details.

DIKE QUANTITIES

TYPE	CUBIC YARDS PER LINEAR FOOT
A	0.0135
C	0.0038
D	0.0293
E	0.0130
F	0.0066

Quantities based on 5% cross slope.

STATE OF CALIFORNIA
DEPARTMENT OF TRANSPORTATION

HOT MIX ASPHALT DIKES

NO SCALE

RSP A87B DATED JULY 19, 2013 SUPERSEDES STANDARD PLAN A87B
DATED MAY 20, 2011 - PAGE 120 OF THE STANDARD PLANS BOOK DATED 2010.

REVISED STANDARD PLAN RSP A87B

6-27-13

Dist	COUNTY	ROUTE	POST MILES TOTAL PROJECT	SHEET No.	TOTAL SHEETS
03	But	99	40.5/40.8	55	76

REGISTERED CIVIL ENGINEER

July 19, 2013
PLANS APPROVAL DATE

REGISTERED PROFESSIONAL ENGINEER William K. Farnbach No. C49042 Exp. 9-30-14 CIVIL STATE OF CALIFORNIA

THE STATE OF CALIFORNIA OR ITS OFFICERS OR AGENTS SHALL NOT BE RESPONSIBLE FOR THE ACCURACY OR COMPLETENESS OF SCANNED COPIES OF THIS PLAN SHEET.

TO ACCOMPANY PLANS DATED 10-13-14

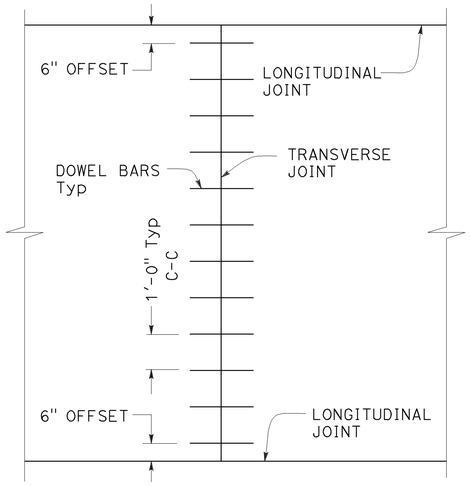

TRANSVERSE JOINT DOWEL BAR LAYOUT

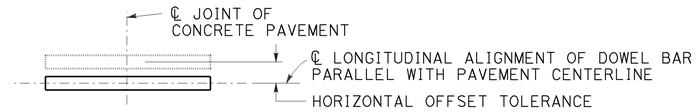

PLAN

HORIZONTAL OFFSET TOLERANCE

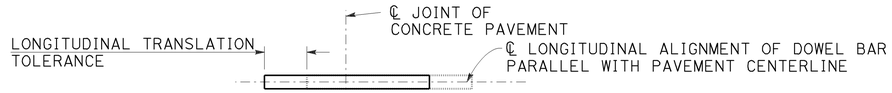

PLAN

LONGITUDINAL TRANSLATION TOLERANCE

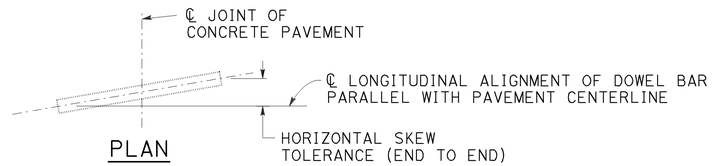

PLAN

HORIZONTAL SKEW TOLERANCE

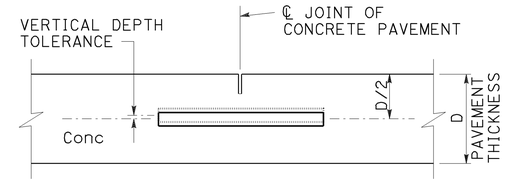

ELEVATION

VERTICAL DEPTH TOLERANCE

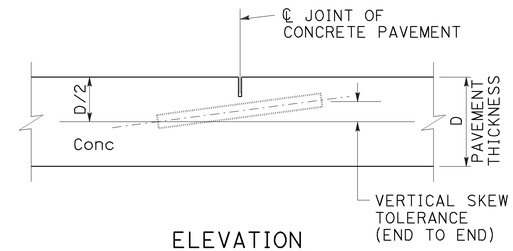

ELEVATION

VERTICAL SKEW TOLERANCE

NOTES:

1. See Revised Standard Plan RSP P1 for typical dowel bar placement and locations.
2. Where fresh concrete pavement is placed against new concrete or existing concrete pavement, rounding the corner of the existing concrete pavement is not required.
3. May also use ¾" Dia dowel bars 2'-4" ± ¼" in length. Center the length of dowel bars at the centerline of longitudinal joint.

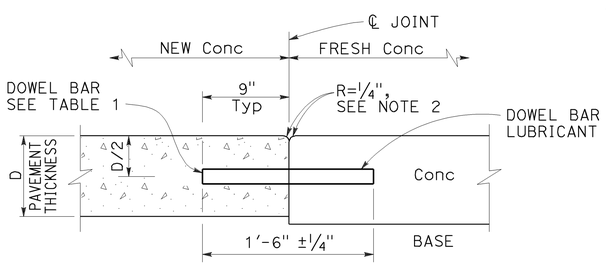

TRANSVERSE CONSTRUCTION JOINT DETAIL

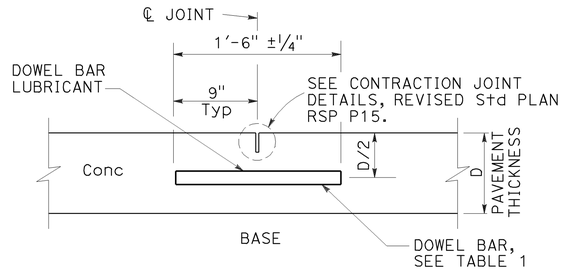

TRANSVERSE CONTRACTION JOINT

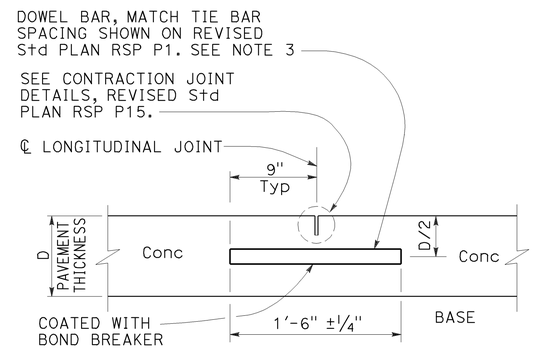

LONGITUDINAL CONTRACTION JOINT WITH DOWEL BARS

See Revised Std Plan RSP P18

TABLE 1

DOWEL BAR DIAMETER TABLE			
PAVEMENT THICKNESS	0.65'	> 0.65' - 0.85'	> 0.85'
MINIMUM DOWEL * BAR DIAMETER	1"	1¼"	1½"

* The drilled hole diameter must be ⅛" to 3/16" larger than the bar diameter.

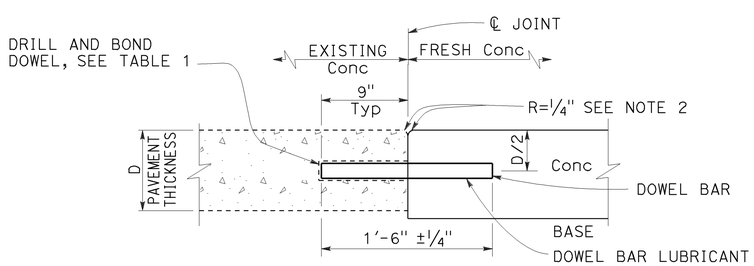

TRANSVERSE CONSTRUCTION JOINT FOR EXISTING CONCRETE PAVEMENT

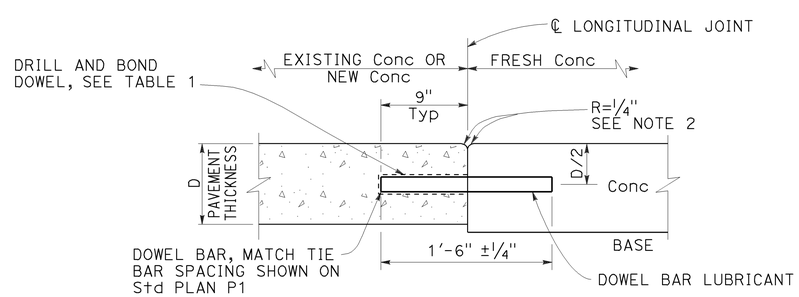

LONGITUDINAL CONSTRUCTION JOINT WITH DOWEL BARS

See Revised Std Plan RSP P18

STATE OF CALIFORNIA
DEPARTMENT OF TRANSPORTATION

CONCRETE PAVEMENT DOWEL BAR DETAILS

NO SCALE

RSP P10 DATED JULY 19, 2013 SUPERSEDES RSP P10 DATED APRIL 20, 2012 AND STANDARD PLAN P10 DATED MAY 20, 2011 - PAGE 131 OF THE STANDARD PLANS BOOK DATED 2010.

REVISED STANDARD PLAN RSP P10

2010 REVISED STANDARD PLAN RSP P10

5-31-13

DIST	COUNTY	ROUTE	POST MILES TOTAL PROJECT	SHEET No.	TOTAL SHEETS
03	But	99	40.5/40.8	56	76

REGISTERED CIVIL ENGINEER

November 15, 2013
PLANS APPROVAL DATE

REGISTERED PROFESSIONAL ENGINEER
Cornelis M. Hakim
No. C55610
Exp. 12-31-14
CIVIL
STATE OF CALIFORNIA

THE STATE OF CALIFORNIA OR ITS OFFICERS OR AGENTS SHALL NOT BE RESPONSIBLE FOR THE ACCURACY OR COMPLETENESS OF SCANNED COPIES OF THIS PLAN SHEET.

TO ACCOMPANY PLANS DATED 10-13-14

ABBREVIATIONS:

SE SAFETY EDGE

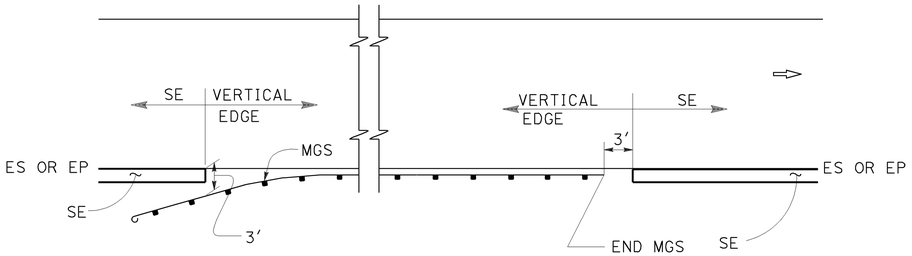

MGS

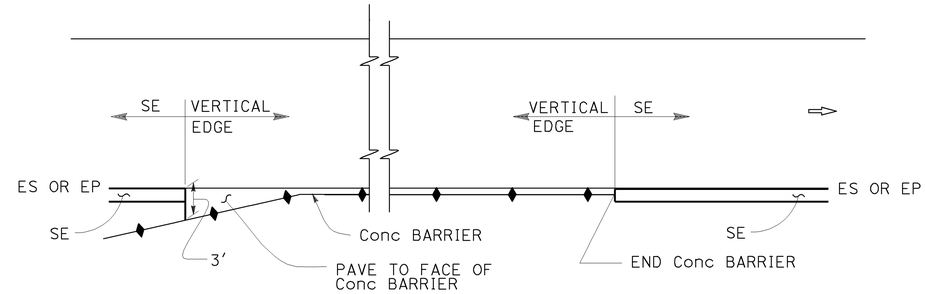

CONCRETE BARRIER

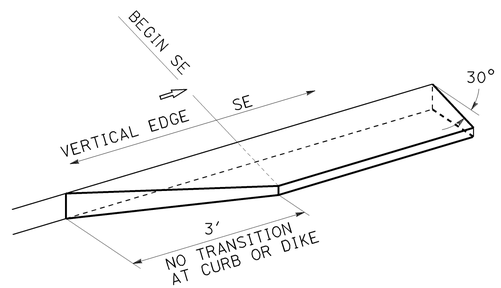

TRANSITION DETAIL FOR CONCRETE ONLY

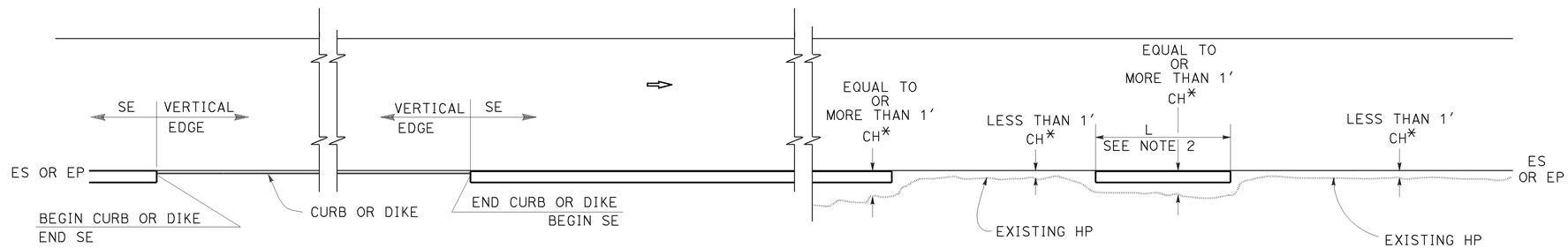

CURB OR DIKE

NARROW SIDE SLOPE

* CH = Distance from ES or EP to existing HP.

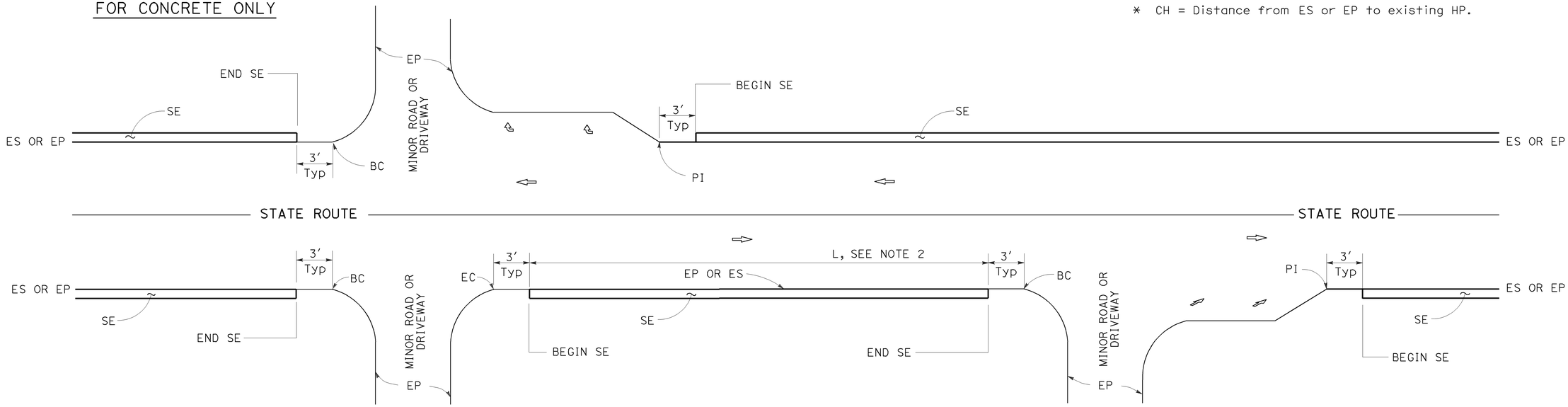

INTERSECTION

MINOR ROADWAY OR DRIVEWAY

DRIVEWAY AND INTERSECTION

NOTES:

1. For details not shown, see Revised Standard Plans RSP P75 and RSP P76.
2. Safety edge is optional when L is less than 30′.

STATE OF CALIFORNIA
DEPARTMENT OF TRANSPORTATION

PAVEMENT EDGE TREATMENTS

NO SCALE

RSP P74 DATED NOVEMBER 15, 2013 SUPERSEDES RSP P74 DATED JANUARY 20, 2012 THAT SUPPLEMENTS THE STANDARD PLANS BOOK DATED 2010.

REVISED STANDARD PLAN RSP P74

2010 REVISED STANDARD PLAN RSP P74

10-11-13

DIST	COUNTY	ROUTE	POST MILES TOTAL PROJECT	SHEET No.	TOTAL SHEETS
03	But	99	40.5/40.8	57	76

REGISTERED CIVIL ENGINEER

November 15, 2013
PLANS APPROVAL DATE

REGISTERED PROFESSIONAL ENGINEER
Cornelis M. Hakim
No. C55610
Exp. 12-31-14
CIVIL
STATE OF CALIFORNIA

THE STATE OF CALIFORNIA OR ITS OFFICERS OR AGENTS SHALL NOT BE RESPONSIBLE FOR THE ACCURACY OR COMPLETENESS OF SCANNED COPIES OF THIS PLAN SHEET.

TO ACCOMPANY PLANS DATED 10-13-14

LEGEND:

- HMA PAVEMENT
- HMA OR CONCRETE PAVEMENT
- CONCRETE PAVEMENT

ABBREVIATIONS:

SE SAFETY EDGE
TT TOTAL THICKNESS OF SE
HW HINGE WIDTH, DISTANCE FROM ES OR EP TO HP

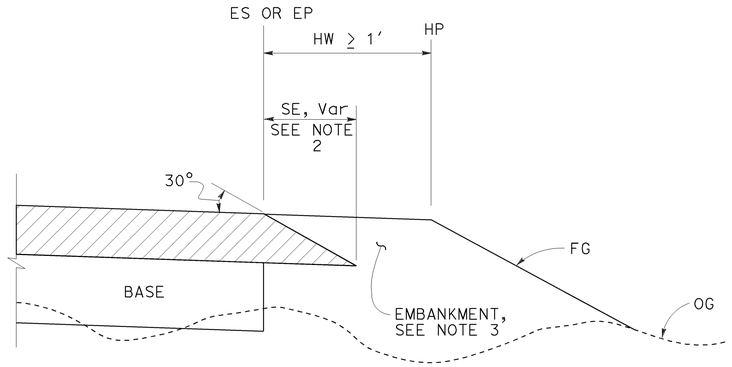

CASE K
Safety Edge - Fill Section, HW ≥ 1′

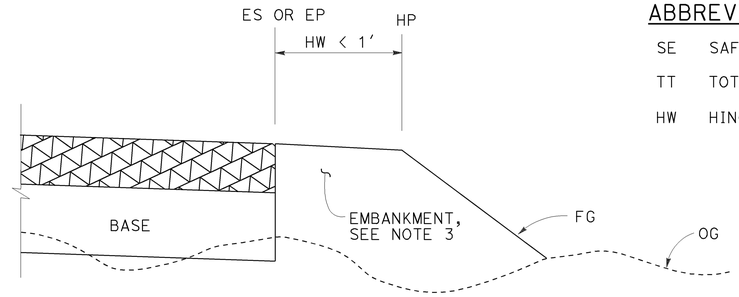

CASE L
Vertical Edge - Fill Section, HW < 1′

FILL SECTION

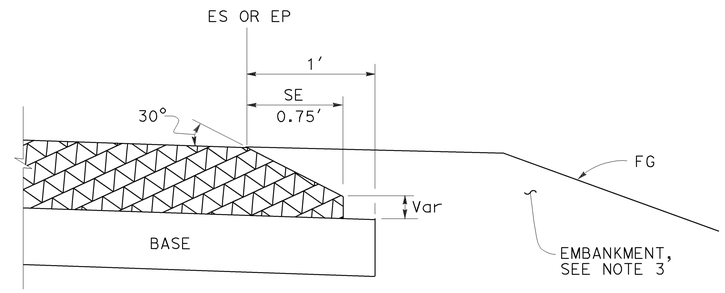

DETAIL "B"
For HMA pavement thickness more than 0.43′ or concrete pavement

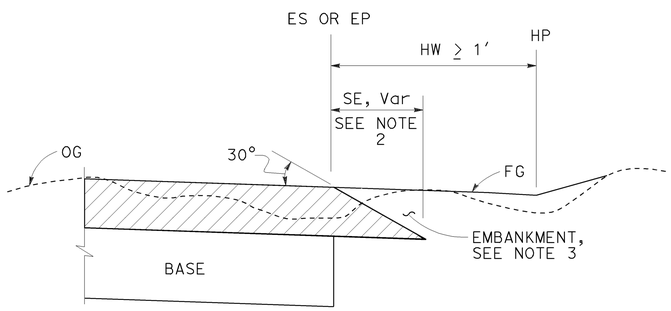

CASE M
Safety Edge - Cut Section, HW ≥ 1′

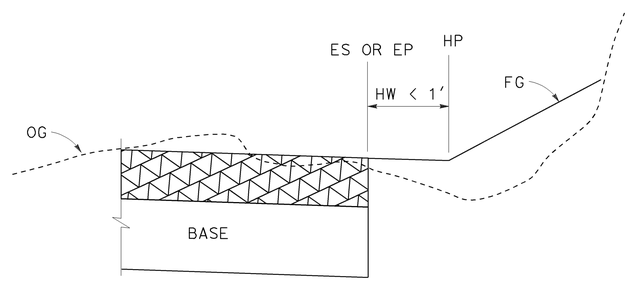

CASE N
Vertical Edge - Cut Section, HW < 1′

CUT SECTION

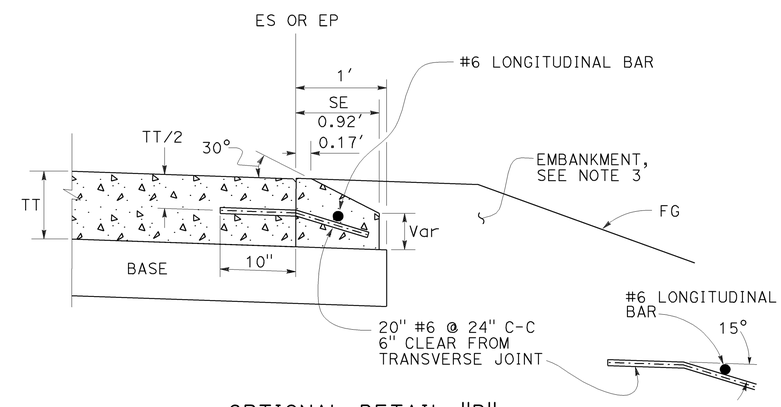

OPTIONAL DETAIL "B"
For concrete pavement
See Note 4

NOTES:

1. For limits of safety edge and vertical edge treatments, see Revised Standard Plan RSP P74
2. Details shown for HMA pavement thickness less than 0.43′. See Detail "B" for HMA pavement thickness more than 0.43′ or concrete pavement.
3. For locations and limits of embankment see project plans.
4. Safety edge transverse joint must match pavement transverse joint. End of #6 longitudinal bar must be 2" ±½" clear from transverse joint.
5. Safety edge is not needed in the area of MGS, barrier, right turn lane and acceleration lane. See Revised Standard Plan RSP P74.

STATE OF CALIFORNIA
DEPARTMENT OF TRANSPORTATION

PAVEMENT EDGE TREATMENTS-NEW CONSTRUCTION

NO SCALE

RSP P76 DATED NOVEMBER 15, 2013 SUPERSEDES RSP P76 DATED JANUARY 20, 2012 THAT SUPPLEMENTS THE STANDARD PLANS BOOK DATED 2010.

REVISED STANDARD PLAN RSP P76

2010 REVISED STANDARD PLAN RSP P76

10-4-13

TO ACCOMPANY PLANS DATED 10-13-14

Dist	COUNTY	ROUTE	POST MILES TOTAL PROJECT	SHEET No.	TOTAL SHEETS
03	But	99	40.5/40.8	58	76

REGISTERED CIVIL ENGINEER

October 19, 2012
PLANS APPROVAL DATE

REGISTERED PROFESSIONAL ENGINEER Glenn DeCou No. C34547 Exp. 9-30-13 CIVIL STATE OF CALIFORNIA

THE STATE OF CALIFORNIA OR ITS OFFICERS OR AGENTS SHALL NOT BE RESPONSIBLE FOR THE ACCURACY OR COMPLETENESS OF SCANNED COPIES OF THIS PLAN SHEET.

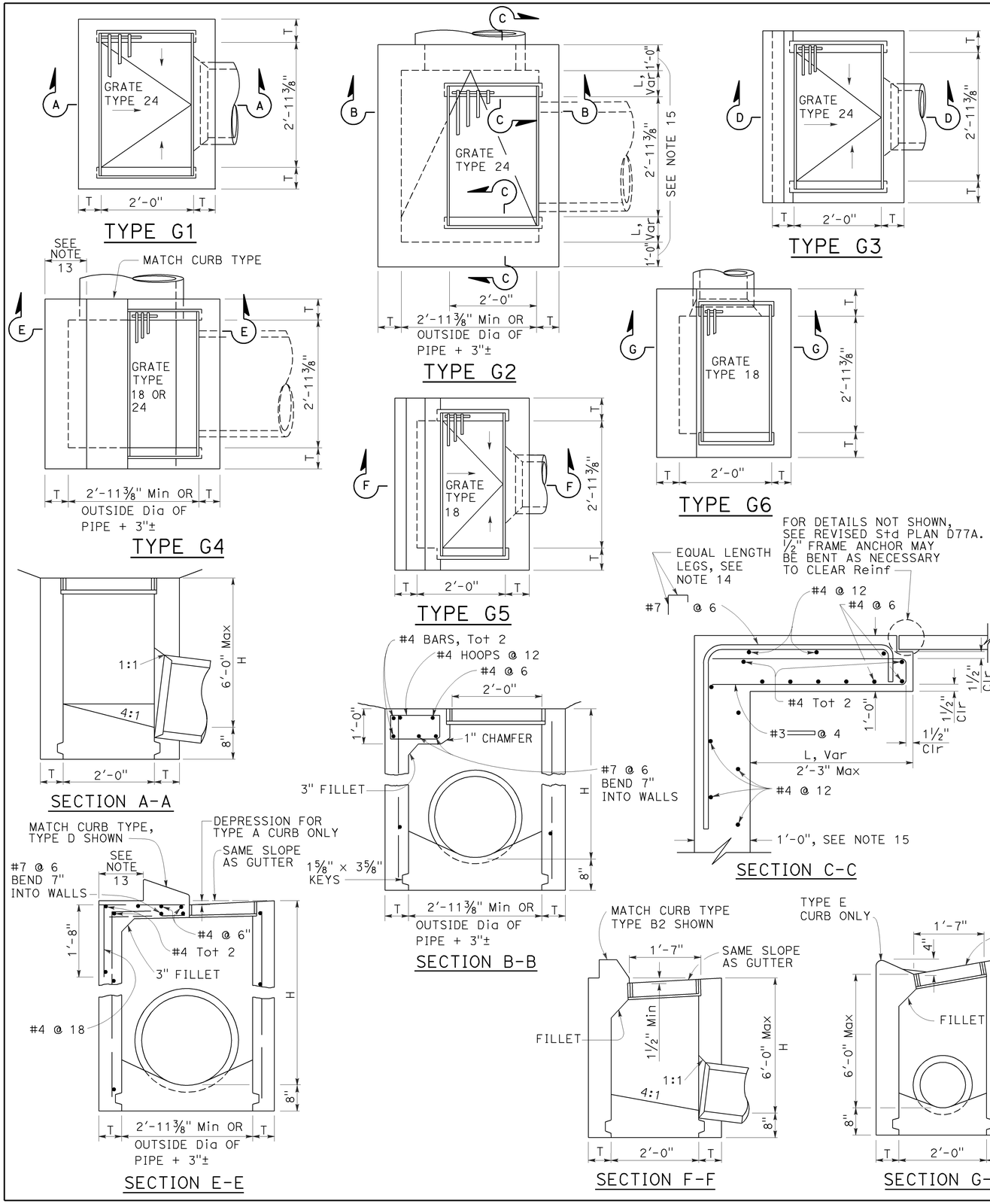

NOTES:

1. "H" is the difference in elevation between the outlet pipe flow line and the normal gutter grade line undepressed.
2. For "T" wall thickness, see Table A below.
3. Wall reinforcing not required when "H" is 8'-0" or less and the unsupported width or length is 7'-0" or less. Walls exceeding these limits shall be reinforced with #4 bars @ 1'-6" ± centers placed 1½" clear to inside of box unless otherwise shown.
4. Inlet bottom reinforcing not required. See Standard Plan D74C for alternative reinforced bottom and alternative half round bottom.
5. Steps-None required where "H" is less than 2'-6". Where "H" is 2'-6" or more, install steps with lowest rung 1'-0" above the floor and highest rung not more than 6" below top of inlet. The distance between steps shall not exceed 1'-0" and shall be uniform throughout the length of the wall. Place steps in the wall without an opening. Steps inserts may be substituted for the bar steps. Step inserts shall comply with State Industrial Safety requirements. See Standard Plan D74C for step details.
6. Details shown apply to both metal and concrete pipe.
7. Pipe(s) can be placed in any wall.
8. Curb section shall match adjacent curb.
9. Basin floors shall have wood trowel finish and a minimum slope of 12:3 from all directions toward outlet pipe.
10. Set inlet so that grate bars are parallel to direction of principal surface flow.
11. See Revised Standard Plans D77A and D77B for grate and frame details and weights of miscellaneous iron and steel.
12. See Standard Plan D78A for gutter depression details.
13. This dimenison will vary with different grates, curbs types, box width and wall thickness.
14. Bar may be rotated as necessary to clear opening. Where "L" is 6" or less, bar may be omitted.
15. Where "L" is 6" or less, wall thickness shall be as shown in Table A.
16. Cast-in-place inlets to be formed around all pipes/stubs intersecting the inlet, and concrete poured in one continuous operation. Precast inlets shall have mortared connections conforming to details for Type GCP Inlet shown on Standard Plan D75B. See Standard Specifications for mortar composition.

TABLE A

CONCRETE QUANTITIES				
TYPE	H=3'-0" TO 8'-0" (T=6")		H=8'-1" TO 20'-0" (T=8")	
	H=3'-0" (CY)	ADDITIONAL PCC PER FOOT (CY)	H=8'-1" (CY)	ADDITIONAL PCC PER FOOT (CY)
G-1	0.95	0.220	See Note A	SEE NOTE A
G-2*	1.31	0.255	3.50	0.357
G-3	1.03	0.220	See Note A	SEE NOTE A
G-4* (TYPE 24)	1.27	0.255	3.48	0.357
G-4* (TYPE 18)	1.30	0.255	3.50	0.357
G-5	1.02	0.220	SEE NOTE A	SEE NOTE A
G-6	1.04	0.220	SEE NOTE A	SEE NOTE A

TABLE BASED ON 8" FLOOR SLAB. NO DEDUCTIONS ARE TO BE MADE TO THESE QUANTITIES BECAUSE OF PIPE OPENINGS, DIFFERENT FLOOR ALTERNATIVES OR DIFFERENT CURB TYPES. * QUANTITIES FOR TYPE G-2 AND G-4 INLETS BASED ON THE MINIMUM INTERIOR DIMENSIONS.

NOTE A:

Maximum allowable height 6'-0".

STATE OF CALIFORNIA
DEPARTMENT OF TRANSPORTATION

DRAINAGE INLETS

NO SCALE

RSP D73 DATED OCTOBER 19, 2012 SUPERSEDES STANDARD PLAN D73 DATED MAY 20, 2011 - PAGE 156 OF THE STANDARD PLANS BOOK DATED 2010.

REVISED STANDARD PLAN RSP D73

2010 REVISED STANDARD PLAN RSP D73

7-19-12

Dist	COUNTY	ROUTE	POST MILES TOTAL PROJECT	SHEET No.	TOTAL SHEETS
03	But	99	40.5/40.8	59	76

Raymond Don Tsztoo
REGISTERED CIVIL ENGINEER

April 19, 2013
PLANS APPROVAL DATE

REGISTERED PROFESSIONAL ENGINEER Raymond Don Tsztoo No. C37332 Exp. 6-30-14 CIVIL STATE OF CALIFORNIA

THE STATE OF CALIFORNIA OR ITS OFFICERS OR AGENTS SHALL NOT BE RESPONSIBLE FOR THE ACCURACY OR COMPLETENESS OF SCANNED COPIES OF THIS PLAN SHEET.

TO ACCOMPANY PLANS DATED 10-13-14

2010 REVISED STANDARD PLAN RSP D77A

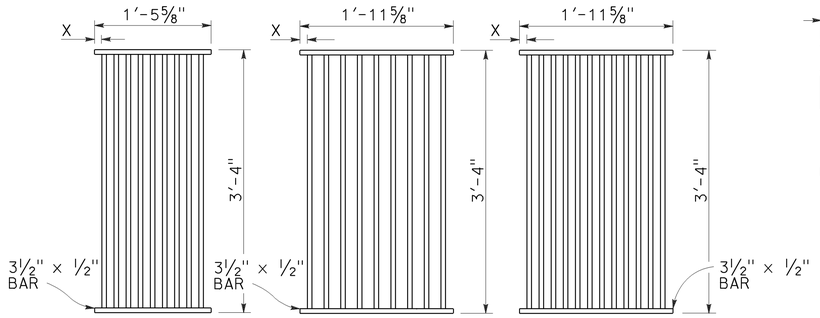

TYPE 18-9

1⅜" Clear spacing. Use within the roadbed on highways where bicycles and pedestrians are excluded.

TYPE 24-9

2" Clear spacing. Use in locations off the roadbed on all types of highways.

TYPE 24-12

1⅜" Clear spacing. Use within the roadbed on highways where bicycles and pedestrians are excluded.

RECTANGULAR GRATE DETAILS

(See table below)

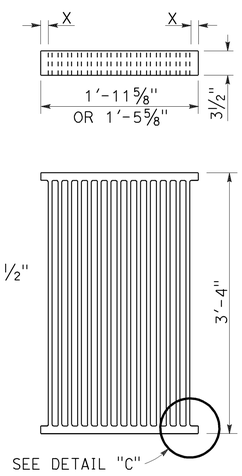

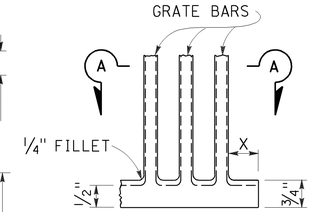

DETAIL "C"

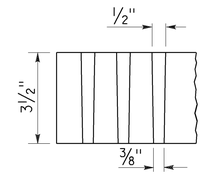

SECTION A-A

ALTERNATIVE CAST DUCTILE IRON GRATE OR CAST CARBON STEEL GRATE

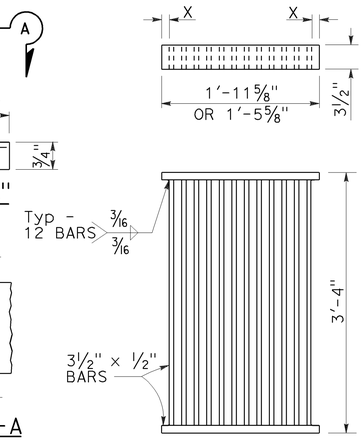

ALTERNATIVE WELDED GRATE

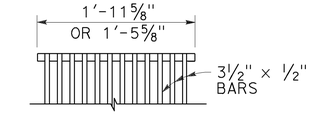

CAST END BLOCK

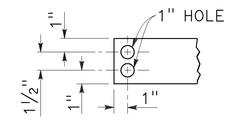

END OF BAR

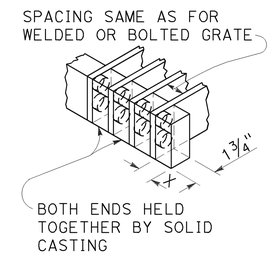

ALTERNATIVE CAST DUCTILE IRON OR CAST CARBON STEEL END BLOCK GRATE

NOTES:

1. Grate type numbers refer to approximate width of grate in inches and number of bars, respectively.
2. Contractor has the option of using cast ductile iron, cast carbon steel, welded, bolted, or cast end block grate.
3. Rounded top of bars optional on all grates.
4. Pipe inlets with a grate shall be placed so that bars parallel direction of principle surface flow.
5. Complete joint penetration butt welds may be substituted for the fillet welds on all anchors.
6. Standard square, hexagon, round or equivalent headed anchors may be substituted for the right angle hooks on the anchors shown on this plan.
7. Grate and frame weights are based on welded grates (weights of face angles, steps, protection bars, etc. are not included).
8. Connect chain to grate and frame only at locations shown on the plans. When chain is required, do not use cast ductile iron grates.

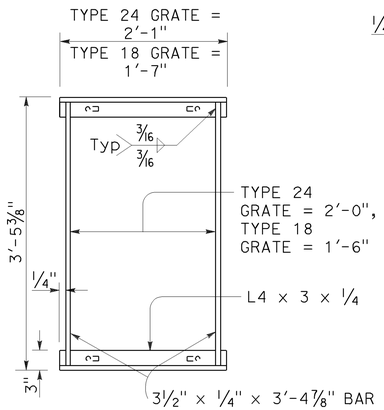

TYPICAL FRAME

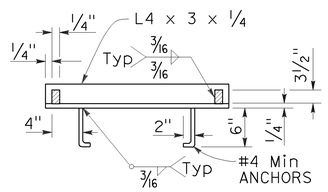

CROSS SECTION

(Thru frame)

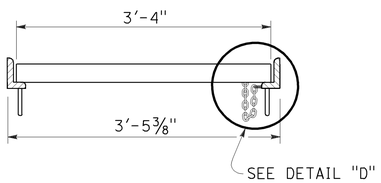

LONGITUDINAL SECTION

(Thru frame and grate)

RECTANGULAR FRAME DETAILS

(For all rectangular grates)

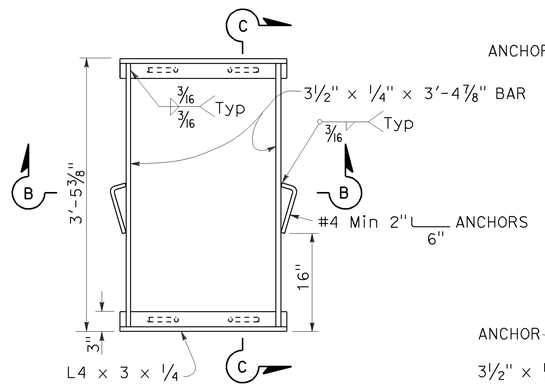

TYPICAL FRAME

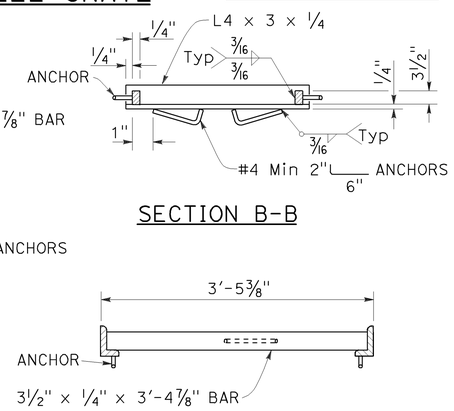

SECTION B-B

SECTION C-C

ALTERNATIVE ANCHOR FOR RECTANGULAR FRAME

(For details not shown, See Rectangular Frame Details)

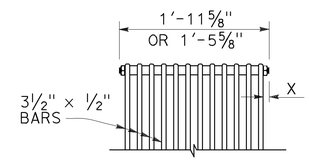

BOLTED END BLOCK

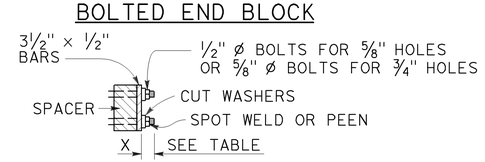

BOLTING DETAIL

ALTERNATIVE BOLTED GRATE

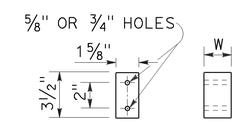

BAR SPACER

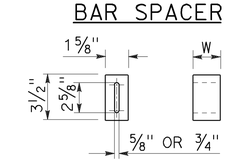

ALTERNATIVE SPACER

W = 1⅜" or 2"

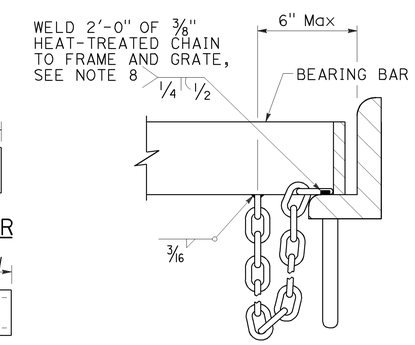

DETAIL "D"

(Steel grates only)

GRATE BAR SPACING TABLE

TYPE	No. OF BARS	CLEAR BAR SPACING	X
18-9	9	1⅜"	1 1/16"
24-9	9	2"	1 9/16"
24-12	12	1⅜"	1¼"

INLET TYPE	COVER TYPE	WEIGHT LB
OS	PLATE	174
OL-7	PLATE	170
OL-10	PLATE	170
OL-14	PLATE	170
OL-21	PLATE	170
OCP	PLATE	112
OCPI	PLATE	112
OCPI	REDWOOD	42
OMP	PLATE	177
OMPI	PLATE	177

INLET TYPE	GRATE TYPE	No. OF GRATES	WEIGHT LB
GDO	24-12	2	634
GOL-7	24-12	1	326
GOL-10	24-12	1	326
GO,G1,G2,G3,G4 (TYPE 24)	24-9	1	263
	24-12	1	326
G4 (TYPE 18),G5,G6	18-9	1	249
GT1	18-9	2	498
GT2	18-9	2	498
GT3	24-12	2	652
GT4	24-12	2	652
TRASH RACK			22
GRATE CHAIN			3

BASIS FOR Misc IRON & STEEL FINAL PAY WEIGHTS FOR DRAINAGE INLETS

(See Note 7)

STATE OF CALIFORNIA
DEPARTMENT OF TRANSPORTATION

GRATE DETAILS No. 1

NO SCALE

RSP D77A DATED APRIL 19, 2013 SUPERSEDES RSP D77A DATED JULY 20, 2012 AND STANDARD PLAN D77A DATED MAY 20, 2011 - PAGE 164 OF THE STANDARD PLANS BOOK DATED 2010.

REVISED STANDARD PLAN RSP D77A

4-4-13

Dist	COUNTY	ROUTE	POST MILES TOTAL PROJECT	SHEET No.	TOTAL SHEETS
03	But	99	40.5/40.8	60	76

REGISTERED CIVIL ENGINEER

July 19, 2013
PLANS APPROVAL DATE

REGISTERED PROFESSIONAL ENGINEER
Gurinderpal Bhullar
No. C48815
Exp. 9-30-14
CIVIL
STATE OF CALIFORNIA

THE STATE OF CALIFORNIA OR ITS OFFICERS OR AGENTS SHALL NOT BE RESPONSIBLE FOR THE ACCURACY OR COMPLETENESS OF SCANNED COPIES OF THIS PLAN SHEET.

TO ACCOMPANY PLANS DATED 10-13-14

TABLE 1

TAPER LENGTH CRITERIA AND CHANNELIZING DEVICE SPACING

SPEED (S)	MINIMUM TAPER LENGTH * FOR WIDTH OF OFFSET 12 FEET (W)				MAXIMUM CHANNELIZING DEVICE SPACING		
					X	Y	Z **
	TANGENT 2L	MERGING L	SHIFTING L/2	SHOULDER L/3	TAPER	TANGENT	CONFLICT
mph	ft	ft	ft	ft	ft	ft	ft
20	160	80	40	27	20	40	10
25	250	125	63	42	25	50	12
30	360	180	90	60	30	60	15
35	490	245	123	82	35	70	17
40	640	320	160	107	40	80	20
45	1080	540	270	180	45	90	22
50	1200	600	300	200	50	100	25
55	1320	660	330	220	55	110	27
60	1440	720	360	240	60	120	30
65	1560	780	390	260	65	130	32
70	1680	840	420	280	70	140	35

* - For other offsets, use the following merging taper length formula for L:
For speed of 40 mph or less, $L = WS^2/60$
For speed of 45 mph or more, $L = WS$

Where: L = Taper length in feet
W = Width of offset in feet
S = Posted speed limit, off-peak 85th-percentile speed prior to work starting, or the anticipated operating speed in mph

** - Use for taper and tangent sections where there are no pavement markings or where there is a conflict between existing pavement markings and channelizers (CA).

TABLE 2

LONGITUDINAL BUFFER SPACE AND FLAGGER STATION SPACING

SPEED *	Min D **	DOWNGRADE Min D ***		
		-3%	-6%	-9%
mph	ft	ft	ft	ft
20	115	116	120	126
25	155	158	165	173
30	200	205	215	227
35	250	257	271	287
40	305	315	333	354
45	360	378	400	427
50	425	446	474	507
55	495	520	553	593
60	570	598	638	686
65	645	682	728	785
70	730	771	825	891

* - Speed is posted speed limit, off-peak 85th-percentile speed prior to work starting, or the anticipated operating speed in mph

** - Longitudinal buffer space or flagger station spacing

*** - Use on sustained downgrade steeper than -3 percent and longer than 1 mile.

TABLE 3

ADVANCE WARNING SIGN SPACING

ROAD TYPE	DISTANCE BETWEEN SIGNS *		
	A	B	C
	ft	ft	ft
URBAN - 25 mph OR LESS	100	100	100
URBAN - MORE THAN 25 mph TO 40 mph	250	250	250
URBAN - MORE THAN 40 mph	350	350	350
RURAL	500	500	500
EXPRESSWAY / FREEWAY	1000	1500	2640

* - The distances are approximate, are intended for guidance purposes only, and should be applied with engineering judgment. These distances should be adjusted by the Engineer for field conditions, if necessary, by increasing or decreasing the recommmended distances.

STATE OF CALIFORNIA
DEPARTMENT OF TRANSPORTATION

TRAFFIC CONTROL SYSTEM TABLES FOR LANE AND RAMP CLOSURES

NO SCALE

RSP T9 DATED JULY 19, 2013 SUPERSEDES RSP T9 DATED APRIL 19, 2013 THAT SUPPLEMENTS THE STANDARD PLANS BOOK DATED 2010.

REVISED STANDARD PLAN RSP T9

2010 REVISED STANDARD PLAN RSP T9

4-30-13

Dist	COUNTY	ROUTE	POST MILES TOTAL PROJECT	SHEET No.	TOTAL SHEETS
03	But	99	40.5/40.8	61	76

Devinder Singh
REGISTERED CIVIL ENGINEER

October 17, 2014
PLANS APPROVAL DATE

REGISTERED PROFESSIONAL ENGINEER
Devinder Singh
No. C50470
Exp. 6-30-15
CIVIL
STATE OF CALIFORNIA

THE STATE OF CALIFORNIA OR ITS OFFICERS OR AGENTS SHALL NOT BE RESPONSIBLE FOR THE ACCURACY OR COMPLETENESS OF SCANNED COPIES OF THIS PLAN SHEET.

TO ACCOMPANY PLANS DATED 10-13-14

NOTES:

See Revised Standard Plan RSP T9 for tables.

Use cone spacing X for taper segment, Y for tangent segment or Z for conflict situations, as approriate, per Table 1, unless X, Y, or Z cone spacing is shown on this sheet.

Unless otherwise specified in the special provisions, all temporary warning signs shall have black legend on fluorescent orange background.

California codes are designated by (CA). Otherwise, Federal (MUTCD) codes are shown.

TYPICAL LANE CLOSURE WITH REVERSIBLE CONTROL

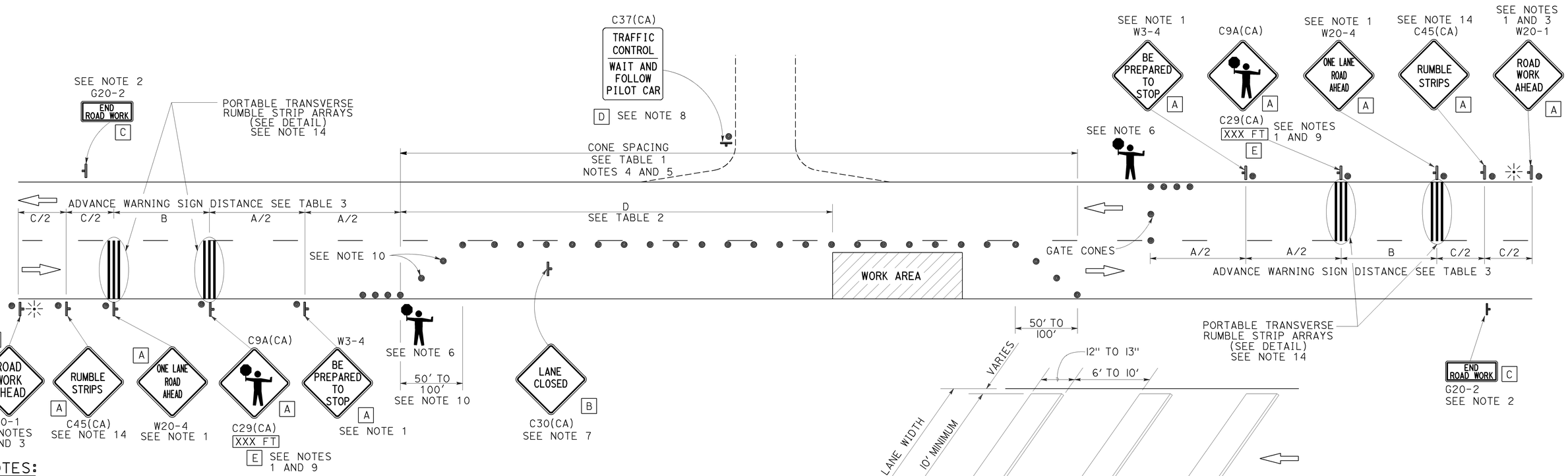

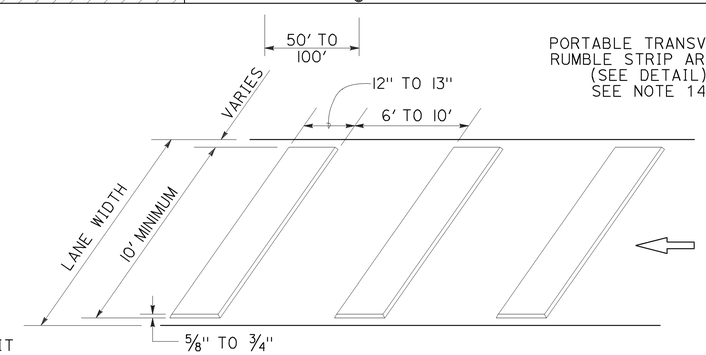

PORTABLE TRANSVERSE RUMBLE STRIP ARRAY DETAIL

NOTES:

1. Each advance warning sign in each direction of travel shall be equipped with at least two flags for daytime closure. Each flag shall be at least 16" x 16" in size and shall be orange or fluorescent red-orange in color. Flashing beacons shall be placed at the locations indicated for lane closure during hours of darkness.
2. A G20-2 "END ROAD WORK" sign, as appropriate, shall be placed at the end of the lane control unless the end of work area is obvious, or ends within a larger project's limits.
3. If the W20-1 sign would follow within 2000' of a stationary W20-1 or G20-1 "ROAD WORK NEXT _____ MILES", use a W20-4 sign for the first advance warning sign.
4. All cones used for lane closures during the hours of darkness shall be fitted with retroreflective bands (or sleeves) as specified in the specifications.
5. Portable delineators, placed at one-half the spacing indicated for traffic cones, may be used instead of cones for daytime closures only.
6. Additional advance flaggers may be required. Flagger should stand in a conspicuous place, be visible to approaching traffic as well as approaching vehicles after the first vehicle has stopped. During the hours of darkness, the flagging-station and flagger shall be illuminated and clearly visible to approaching traffic. The illumination footprint of the lighting on the ground shall be at least 20' in diameter. Place a minimum of four cones at 50' intervals in advance of flagger station as shown.
7. Place C30(CA) "LANE CLOSED" sign at 500' to 1000' intervals throughout extended work areas. They are optional if the work area is visible from the flagger station.
8. When a pilot car is used, place a C37(CA) "TRAFFIC CONTROL-WAIT AND FOLLOW PILOT CAR" sign with black legend on white background at all intersections, driveways and alleys without a flagger within traffic control area. Signs shall be clean and visible at all times. Where traffic can not be effectively self-regulated, at least one flagger shall be used at each intersection within traffic control area.
9. An optional C29(CA) sign may be placed below the C9A(CA) sign.
10. Either traffic cones or barricades shall be placed on the taper. Barricades shall be Type I, II, or III.
11. The color of the portable transverse rumble strips shall be black or orange. Use 2 arrays, each array shall consist of 3 rumble strips.
12. Portable transverse rumble strips shall not be placed on sharp horizontal or vertical curves nor shall they be placed through pedestrian crossings.
13. If the portable transverse rumble strips become out of alignment (skewed) by more than 6 inches, measured from one end to the other, they shall be readjusted to bring the placement back to the original location.
14. Portable transverse rumble strips are not required if any one of the following conditions is satisfied:
    A. Work duration occupies a location for four hours or less
    B. Posted speed limit is below 45 MPH
    C. Work is of emergency nature
    D. Work zone is in snow or icy weather conditions

LEGEND

- TRAFFIC CONE
- TEMPORARY TRAFFIC CONTROL SIGN
- PORTABLE FLASHING BEACON
- FLAGGER

SIGN PANEL SIZE (Min)

A	48" x 48"
B	30" x 30"
C	36" x 18"
D	36" x 42"
E	20" x 7"

STATE OF CALIFORNIA
DEPARTMENT OF TRANSPORTATION

TRAFFIC CONTROL SYSTEM FOR LANE CLOSURE ON TWO LANE CONVENTIONAL HIGHWAYS

NO SCALE

RSP T13 DATED OCTOBER 17, 2014 SUPERSEDES RSP T13 DATED JULY 18, 2014 AND RSP T13 DATED APRIL 19, 2013 AND STANDARD PLAN T13 DATED MAY 20, 2011 - PAGE 241 OF THE STANDARD PLANS BOOK DATED 2010.

REVISED STANDARD PLAN RSP T13

2010 REVISED STANDARD PLAN RSP T13

9-26-14

Dist	COUNTY	ROUTE	POST MILES TOTAL PROJECT	SHEET No.	TOTAL SHEETS
03	But	99	40.5/40.8	62	76

REGISTERED CIVIL ENGINEER

November 15, 2013
PLANS APPROVAL DATE

REGISTERED PROFESSIONAL ENGINEER
Tillat Satter
No. C42892
Exp. 3-31-14
CIVIL
STATE OF CALIFORNIA

THE STATE OF CALIFORNIA OR ITS OFFICERS OR AGENTS SHALL NOT BE RESPONSIBLE FOR THE ACCURACY OR COMPLETENESS OF SCANNED COPIES OF THIS PLAN SHEET.

TO ACCOMPANY PLANS DATED 10-13-14

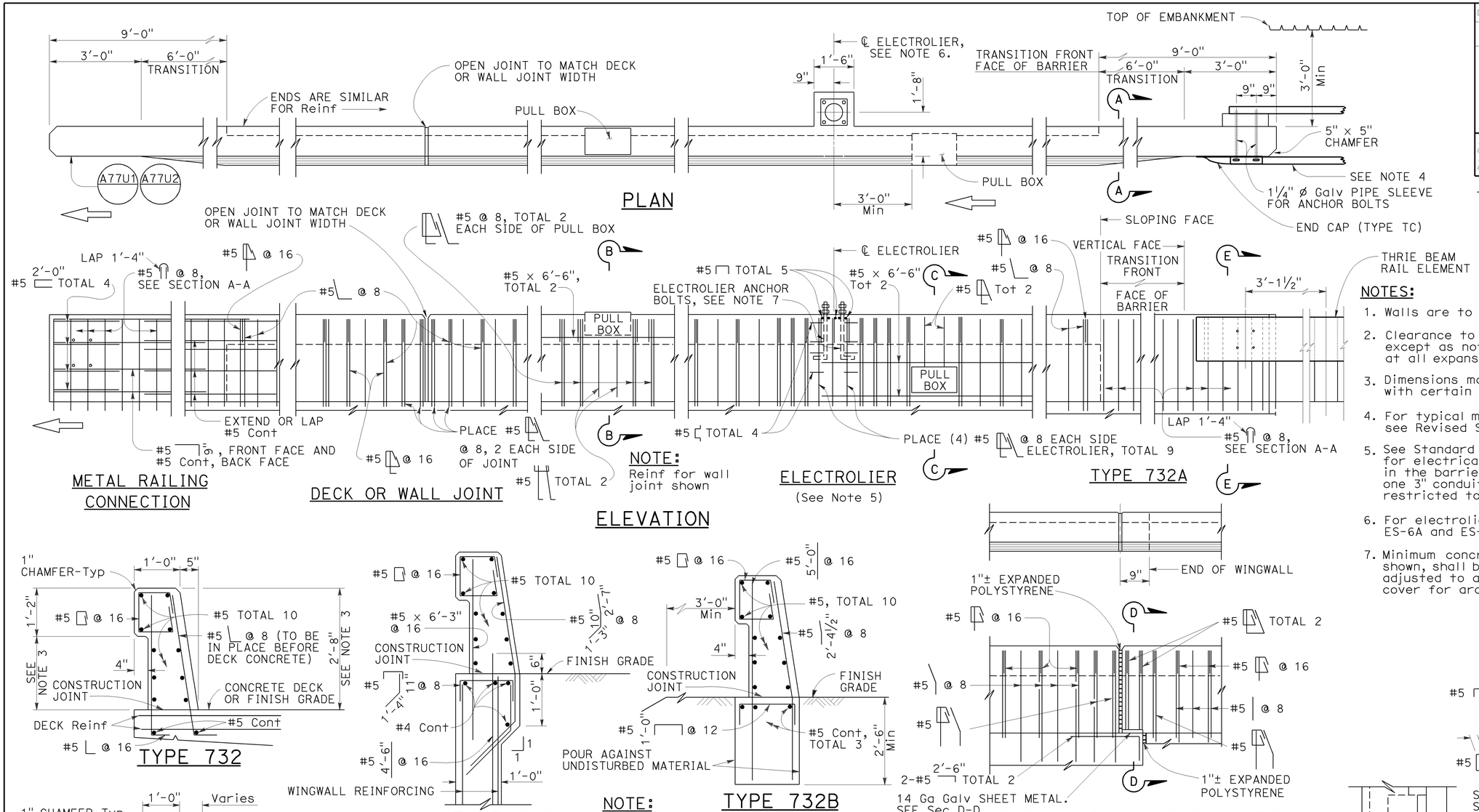

NOTE:
Reinf for wall joint shown

NOTES:

1. Walls are to be backfilled before barrier is placed.
2. Clearance to reinforcing steel in barrier to be 1", except as noted. Longitudinal reinforcement to stop at all expansion joints.
3. Dimensions may vary with roadway cross slope and with certain thickness of surfacing. See Project Plans.
4. For typical metal railing connection details not shown, see Revised Standard Plans RSP A77U1 and RSP A77U2.
5. See Standard Plans ES-9A, ES-9B, ES-9C, ES-9D and ES-9E for electrical details. The maximum number of conduits in the barrier is limited to two 2" conduits along with one 3" conduit. When a 3" conduit is used, it is restricted to the base of the barrier.
6. For electrolier mounting details, See Standard Plans ES-6A and ES-6B.
7. Minimum concrete edge distance, to the reinforcing shown, shall be maintained. Edge distance may be adjusted to accommodate increase in concrete cover for architectual treatment.

NOTE:
Types 732A and 732B are similar to Type 732 except as noted.

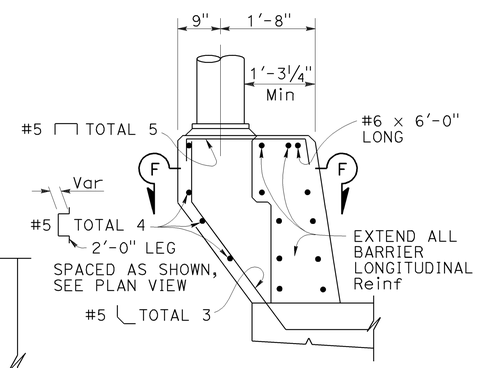

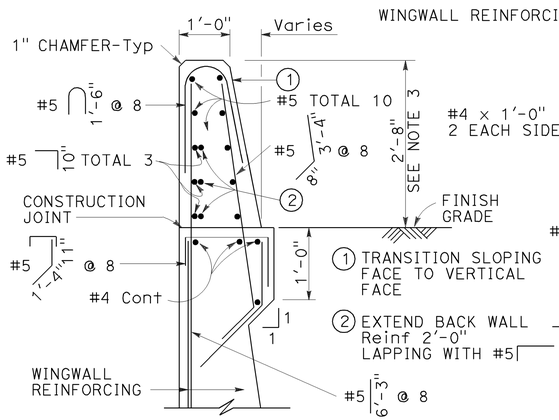

Details shown for barrier anchorage to Type 732A. Anchorage for barrier Types 732 and 732A are similar to their respective details.

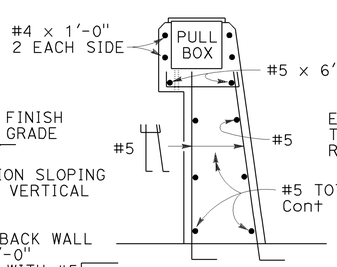

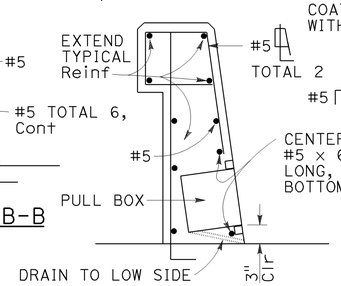

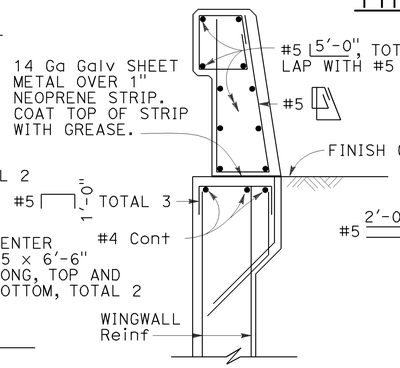

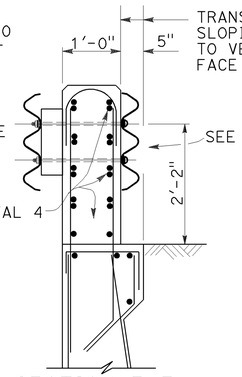

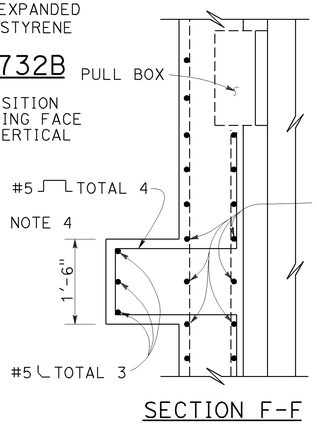

STATE OF CALIFORNIA
DEPARTMENT OF TRANSPORTATION

CONCRETE BARRIER TYPE 732

NO SCALE

RSP B11-55 DATED NOVEMBER 15, 2013 SUPERSEDES
RSP B11-55 DATED JULY 19, 2013 AND STANDARD PLAN B11-55
DATED MAY 20, 2011 - PAGE 297 OF THE STANDARD PLANS BOOK DATED 2010.

REVISED STANDARD PLAN RSP B11-55

2010 REVISED STANDARD PLAN RSP B11-55

10-4-13

DIST	COUNTY	ROUTE	POST MILES TOTAL PROJECT	SHEET No.	TOTAL SHEETS
03	But	99	40.5/40.8	63	76

REGISTERED CIVIL ENGINEER — DATE 09-08-14

10-13-14
PLANS APPROVAL DATE

REGISTERED PROFESSIONAL ENGINEER — JOHN J. LANE — No. C55042 — Exp. 06-30-16 — CIVIL — STATE OF CALIFORNIA

The State of California or its officers or agents shall not be responsible for the accuracy or completeness of electronic copies of this plan sheet.

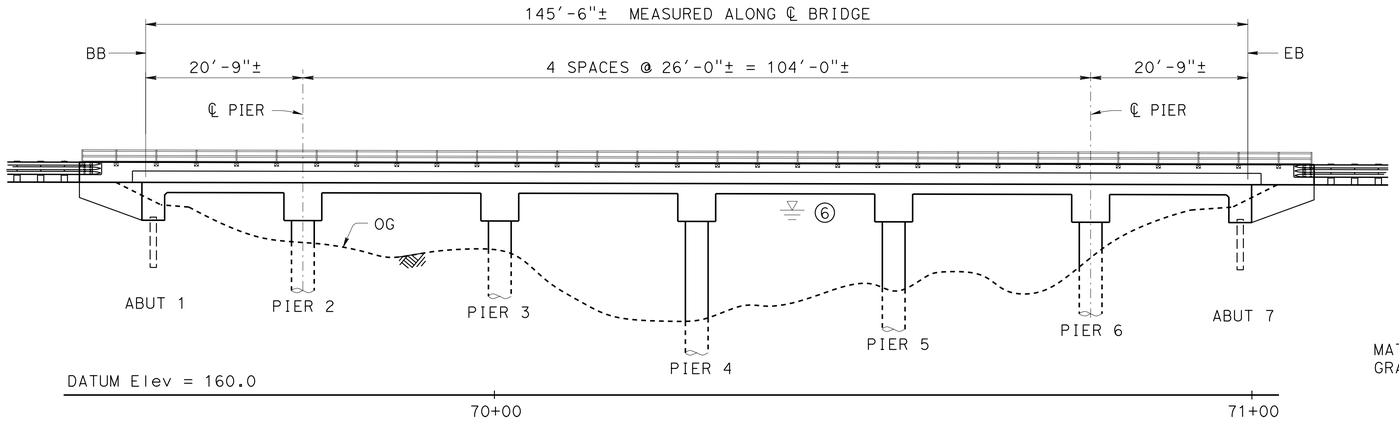

ELEVATION
1" = 10'

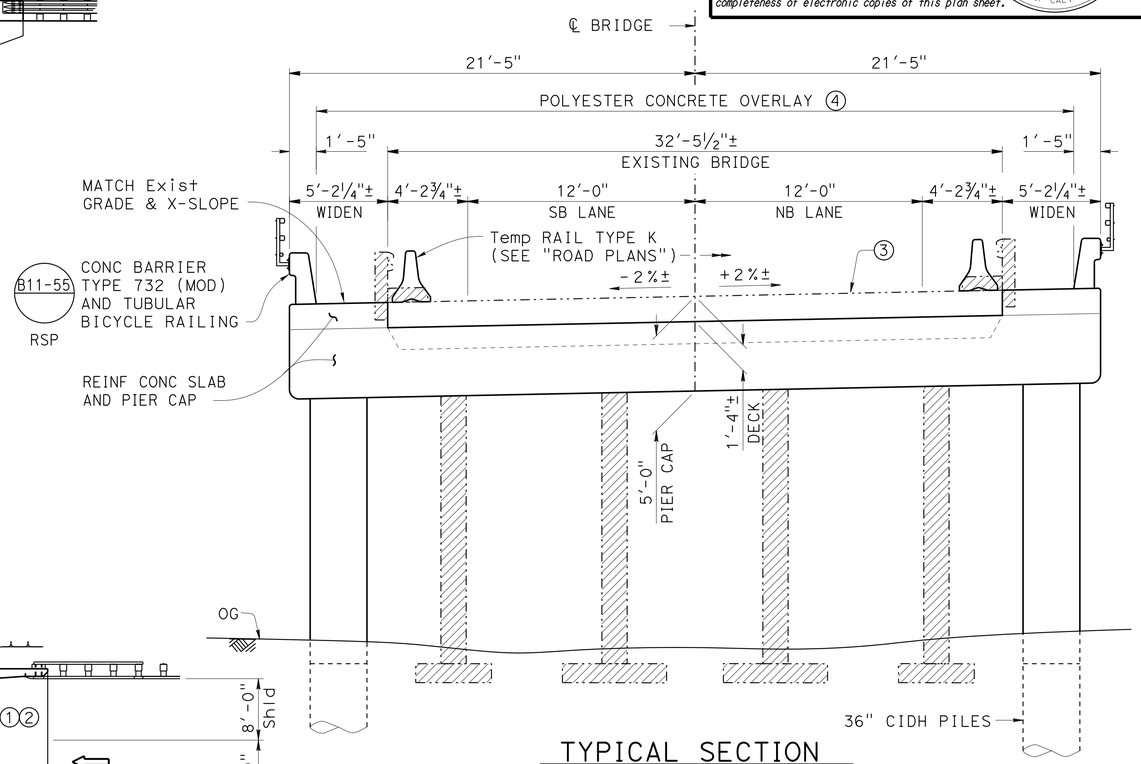

TYPICAL SECTION
¼" = 1'-0"

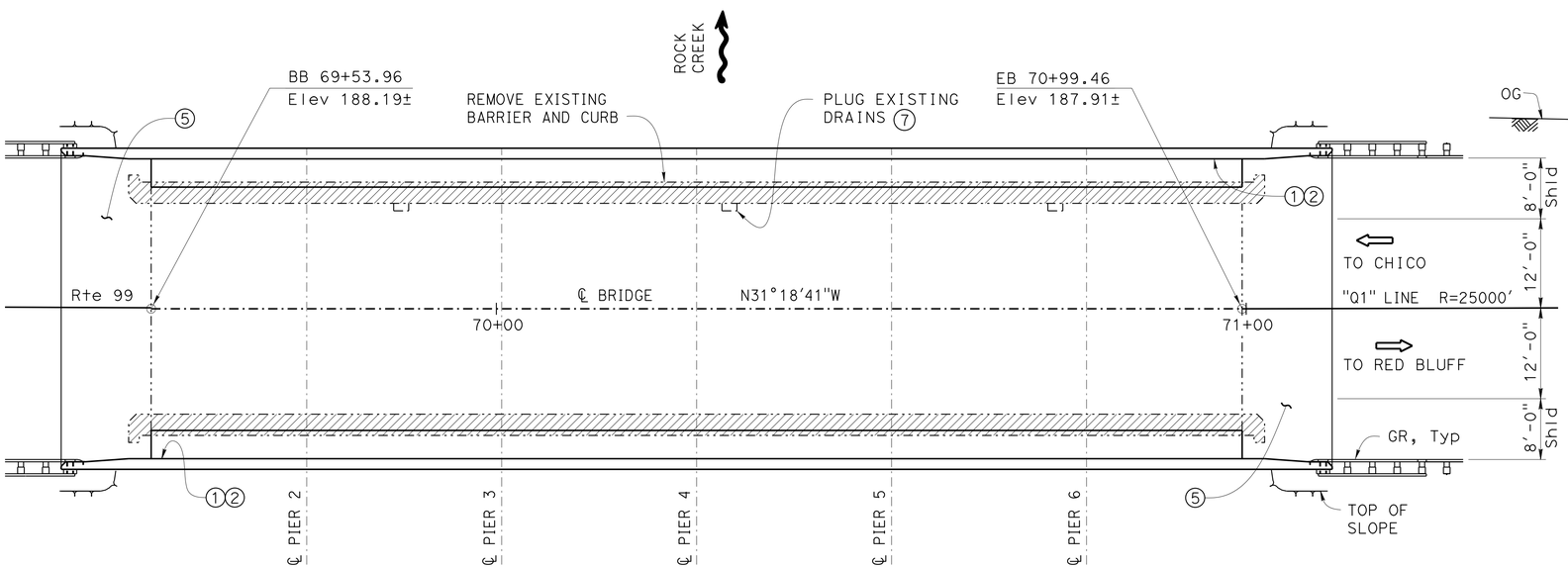

PLAN
1" = 10'

NOTE:
THE CONTRACTOR SHALL VERIFY ALL CONTROLLING FIELD DIMENSIONS BEFORE ORDERING OR FABRICATING ANY MATERIAL.

For Route 99 Alignment see "Index To Plans" sheet

For Index to Plans, Standard Plan List, General Notes and Quantities see "Index To Plans" sheet.

LEGEND

① Paint "BR. NO. 12-0027".

② Paint "ROCK CREEK BRIDGE".

③ Remove existing AC overlay.

④ Indicates limits of prepare conc. bridge deck surface, furnish and place 1" Polyester Concrete overlay.

⑤ Structure Approach.

⑥ For Hydrologic Summary, see "FOUNDATION PLAN" sheet.

⑦ Remove Drain Grate, weld ⅛" galvanized plate to bottom of downdrain and fill downdrain with non-shrink concrete.

—·—·— Indicates Existing Structure.

▨ Indicates Bridge Removal Portion.

D. Dunrud
DESIGN ENGINEER

	BY	CHECKED
DESIGN	J. Lane	D. Dunrud
DETAILS	various	D. Dunrud
QUANTITIES	J. Lane	T. Mason

LOAD & RESISTANCE FACTOR DESIGN — LIVE LOADING: HL93 W/"LOW-BOY": PERMIT DESIGN VEHICLE
LAYOUT — BY J. Lane — CHECKED D. Dunrud
SPECIFICATIONS — BY W. Ward — PLANS AND SPECS COMPARED J. Lane

ORIGINAL SCALE IN INCHES FOR REDUCED PLANS 0 1 2 3

STATE OF CALIFORNIA
DEPARTMENT OF TRANSPORTATION

DIVISION OF ENGINEERING SERVICES
STRUCTURE DESIGN
DESIGN BRANCH 14

BRIDGE NO. 12-0027
POST MILE 40.65

ROCK CREEK BRIDGE (WIDEN)
GENERAL PLAN

UNIT: 3576
PROJECT NUMBER & PHASE: 03000011191
CONTRACT NO.: 03-1F4204

DISREGARD PRINTS BEARING EARLIER REVISION DATES
REVISION DATES: 3-03-2014 8-15-2014
SHEET 1 OF 14

USERNAME => s113538 DATE PLOTTED => 14-NOV-2014 TIME PLOTTED => 14:39

STRUCTURES DESIGN GENERAL PLAN SHEET (ENGLISH) (REV.09-01-10)

FILE => 12-0027-a-01gp.dgn

DIST	COUNTY	ROUTE	POST MILES TOTAL PROJECT	SHEET No.	TOTAL SHEETS
03	But	99	40.5/40.8	64	76

REGISTERED CIVIL ENGINEER — DATE 09-08-14

10-13-14
PLANS APPROVAL DATE

REGISTERED PROFESSIONAL ENGINEER — JOHN J. LANE — No. C55042 — Exp. 06-30-16 — CIVIL — STATE OF CALIFORNIA

The State of California or its officers or agents shall not be responsible for the accuracy or completeness of electronic copies of this plan sheet.

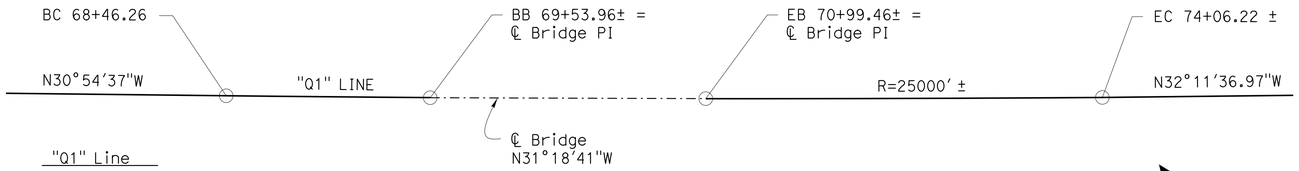

"Q1" Line
R = 25000'
△ = 01°17'00"
T = 279.99
L = 559.96'

ROUTE 99 ALIGNMENT

no scale

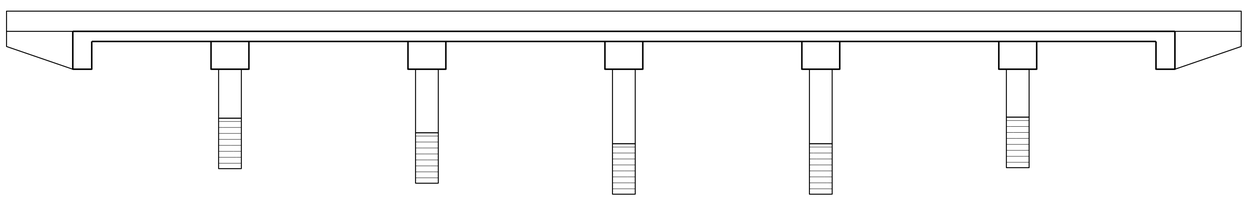

Structural Concrete Bridge (4,000 psi @ 28 days)

CIDH Concrete Pile (4,000 psi @ 28 days)

CONCRETE STRENGTH AND TYPE LIMITS

no scale

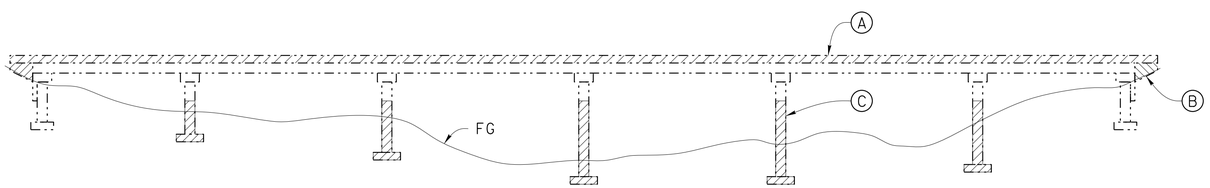

Bridge Removal Portion

ELEVATION

Ⓐ Remove Bridge Rail and Curb.
Ⓑ Remove Abutment Wingwalls.

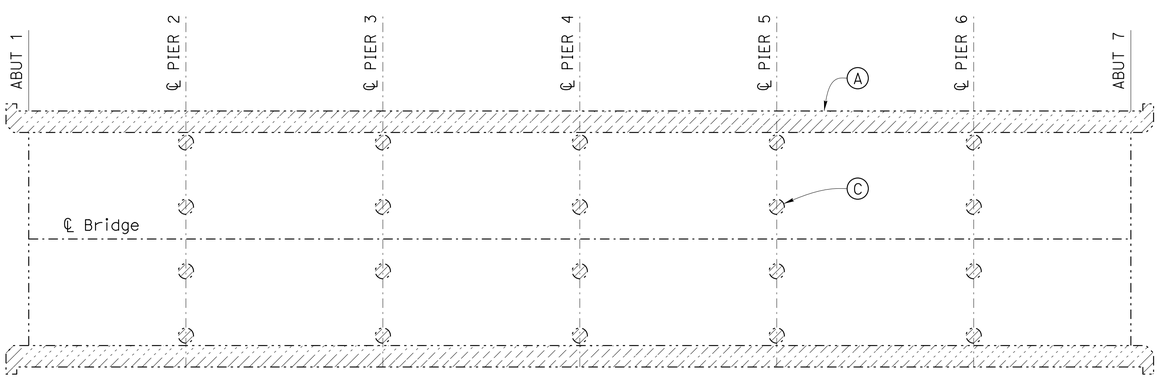

PLAN

PARTIAL STRUCTURE REMOVAL

no scale

Ⓒ Remove Pier Columns and Footings after new Pier Cap has been placed and 28 day strength achieved, patch Cap smooth to match and backfill to OG.

GENERAL NOTES

LOAD AND RESISTANCE FACTOR DESIGN

DESIGN:

AASHTO LRFD Bridge Design Specifications, 4th edition with the California Amendments

SEISMIC DESIGN:

Caltrans Seismic Design Criteria (SDC), Version 1.7 dated April 2013

DEAD LOAD:

Includes 35 psf for future wearing surface.

LIVE LOADING:

HL93 and permit design load.

SEISMIC LOADING:

Vs = 890 ft/sec
PGA = 0.25
M max = 6.7

See "Site Specific ARS Curve"

CONCRETE:

fy = 60 ksi
f'c = 4 ksi
n = 8

STRUCTURAL STEEL

fy = ASTM A706 Grade 60

QUANTITIES

PLUG EXISTING DECK DRAIN	3	EA
REMOVE ASPHALT CONCRETE SURFACING	4,074	SQFT
PREPARE CONCRETE BRIDGE DECK SURFACE	5,820	SQFT
FURNISH POLYESTER CONCRETE OVERLAY	580	CF
PLACE POLYESTER CONCRETE OVERLAY	5,820	SQFT
BRIDGE REMOVAL (PORTION)	LUMP	SUM
STRUCTURE EXCAVATION (BRIDGE)	113	CY
STRUCTURE BACKFILL (BRIDGE)	6	CY
FURNISH STEEL PILING (HP 10 X 57)	477	LF
DRIVE STEEL PILE (HP 10 X 57)	8	EA
36" CAST-IN-DRILLED-HOLE CONCRETE PILING	786	LF
STRUCTURAL CONCRETE, BRIDGE	268	CY
AGGREGATE BASE (APPROACH SLAB)	71	CY
STRUCTURAL CONCRETE, APPROACH SLAB	32	CY
PAVING NOTCH EXTENSION	81	CF
DRILL AND BOND DOWEL (CHEMICAL ADHESIVE)	582	EA
JOINT SEAL (MR 1")	86	LF
BAR REINFORCING STEEL (BRIDGE)	102,895	LB
DRILL AND BOND RESIN CAPSULE ANCHOR	1,160	EA
MISCELLANEOUS METAL (BRIDGE)	2,929	LB
TUBULAR BICYCLE RAILING	335	LF
CONCRETE BARRIER (TYPE 732 MODIFIED)	335	LF

STANDARD PLANS 2010

	A10A	ABBREVIATIONS (SHEET 1 OF 2)
RSP	A10B	ABBREVIATIONS (SHEET 2 OF 2)
	A10C	LINES AND SYMBOLS (SHEET 1 OF 3)
	A10D	LINES AND SYMBOLS (SHEET 2 OF 3)
	A10E	LINES AND SYMBOLS (SHEET 3 OF 3)
	A10F	LEGEND - SOIL (SHEET 1 OF 2)
	A10G	LEGEND - SOIL (SHEET 2 OF 2)
	A10H	LEGEND - ROCK
	A62C	LIMITS OF PAYMENT FOR EXCAVATION AND BACKFILL - BRIDGE
	B0-1	BRIDGE DETAILS
	B0-3	BRIDGE DETAILS
	B0-5	BRIDGE DETAILS
	B6-21	JOINT SEALS (MAXIMUM MOVEMENT RATING = 2")
	B7-1	BOX GIRDER DETAILS
RSP	B11-55	CONCRETE BARRIER TYPE 732

Standard Plan sheet number

Detail number

INDEX TO PLANS

1. GENERAL PLAN
2. INDEX TO PLANS
3. FOUNDATION PLAN
4. ABUTMENT LAYOUT
5. ABUTMENT DETAILS
6. PIER LAYOUT
7. PIER DETAILS
8. TYPICAL SECTION
9. DECK REINFORCEMENT DETAILS
10. TUBULAR BICYCLE RAILING DETAILS
11. STRUCTURE APPROACH
12. STRUCTURE APPROACH DRAINAGE DETAILS
13. LOG OF TEST BORINGS 1 OF 2
14. LOG OF TEST BORINGS 2 OF 2

	BY	CHECKED
DESIGN	J. Lane	D. Dunrud
DETAILS	T. Mason	D. Dunrud
QUANTITIES	J. Lane	T. Mason

STATE OF CALIFORNIA
DEPARTMENT OF TRANSPORTATION

DIVISION OF ENGINEERING SERVICES
STRUCTURE DESIGN
DESIGN BRANCH 14

BRIDGE NO. 12-0027
POST MILE 40.65

ROCK CREEK BRIDGE (WIDEN)
INDEX TO PLANS

STRUCTURES DESIGN DETAIL SHEET (ENGLISH) (REV. 09-01-10)

ORIGINAL SCALE IN INCHES FOR REDUCED PLANS 0 1 2 3

UNIT: 3576
PROJECT NUMBER & PHASE: 03000011191
CONTRACT NO.: 03-1F4204

DISREGARD PRINTS BEARING EARLIER REVISION DATES

REVISION DATES: 3/31/2014 8-15-2014

SHEET 2 OF 14

FILE => 12-0027-a-02index2plans.dgn

USERNAME => s119938 DATE PLOTTED => 14-NOV-2014 TIME PLOTTED => 14:39

DIST	COUNTY	ROUTE	POST MILES TOTAL PROJECT	SHEET No.	TOTAL SHEETS
03	But	99	40.5/40.8	65	76

REGISTERED CIVIL ENGINEER — DATE 09-08-14

10-13-14
PLANS APPROVAL DATE

REGISTERED PROFESSIONAL ENGINEER — JOHN J. LANE — No. C55042 — Exp. 06-30-16 — CIVIL — STATE OF CALIFORNIA

The State of California or its officers or agents shall not be responsible for the accuracy or completeness of electronic copies of this plan sheet.

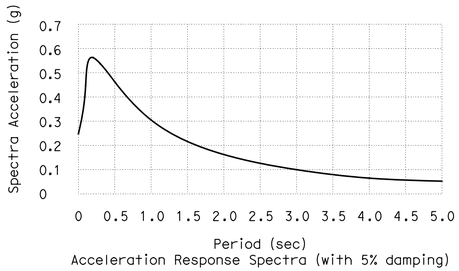

SITE SPECIFIC ARS CURVE

no scale

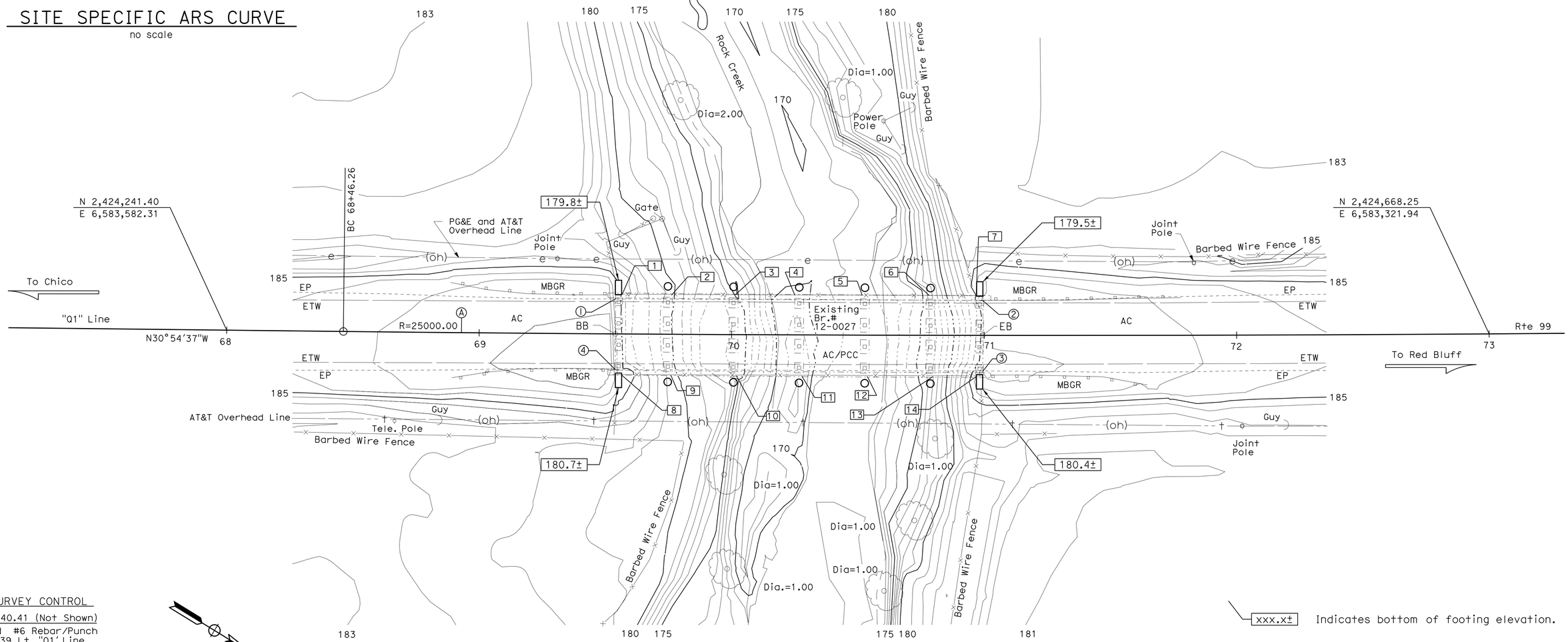

SURVEY CONTROL

CM 40.41 (Not Shown)
Fnd #6 Rebar/Punch
51.39 Lt. "Q1" Line
Sta. 56+38.53
N 2,423,218.49
E 6,584,134.86
Elev.=181.87

CM 40.50 (Not Shown)
Fnd #6 Rebar/Punch
51.53 Lt. "Q1" Line
Sta. 61+28.17
N 2,423,638.51
E 6,583,883.21
Elev.=181.82

CURVE DATA

No.	R	Δ	T	L
Ⓐ	25000.00	1°17'00"	279.99	559.96

SOFFIT ELEVATION

1	186.37	2	186.32
3	186.28	4	186.23
5	186.21	6	187.08
7	186.13	8	187.10
9	186.97	10	186.91
11	186.68	12	186.66
13	186.63	14	186.76

xxx.x± Indicates bottom of footing elevation.

Note:
Electrical Lines, Telephone Lines Per Dist. Utility Map.

BRIDGE LOCATION #12-0027 (PN POINTS)

① 13.86 Lt. "Q1" Line, Sta 69+53.92, Elev.=187.82±(AC)
② 13.88 Lt. "Q1" Line, Sta 70+99.34, Elev.=187.54±(AC)
③ 14.13 Rt. "Q1" Line, Sta 70+99.56, Elev.=187.99±(AC)
④ 14.13 Rt. "Q1" Line, Sta 69+53.99, Elev.=188.32±(AC)

PRELIMINARY INVESTIGATION SECTION

SCALE 1"=20'	VERT.DATUM NAVD88	PHOTOGRAMMETRY AS OF: X		
	HORZ.DATUM NAD83	SURVEYED	BY Districct	CHECKED BY John Borden 04/2013
	ALIGNMENT TIES Dist. Traverse Sheet	DRAFTED	BY Sharon Zheng 04/2013	CHECKED BY Sang Sou 04/2013

DESIGN	BY J. Lane	CHECKED	D. Dunrud
DETAILS	BY T. Mason	CHECKED	D. Dunrud
QUANTITIES	BY J. Lane	CHECKED	T. Mason

STATE OF CALIFORNIA
DEPARTMENT OF TRANSPORTATION

DIVISION OF ENGINEERING SERVICES
STRUCTURE DESIGN
DESIGN BRANCH 14

BRIDGE NO. 12-0027
POST MILE 40.60

ROCK CREEK BRIDGE (RETROFIT)
FOUNDATION PLAN

STRUCTURES FOUNDATION PLAN SHEET (ENGLISH) (REV. 09-01-10)

ORIGINAL SCALE IN INCHES FOR REDUCED PLANS 0 1 2 3

UNIT: 3646
PROJECT NUMBER & PHASE: 03 0000 1119 1 CONTRACT NO.: X

DISREGARD PRINTS BEARING EARLIER REVISION DATES

REVISION DATES: 9/26/13 11/12/13

SHEET 3 OF 14

FILE => 12-0027-e-03fnd-pln.dgn

USERNAME => s119538 DATE PLOTTED => 14-NOV-2014 TIME PLOTTED => 14:39

DIST	COUNTY	ROUTE	POST MILES TOTAL PROJECT	SHEET No.	TOTAL SHEETS
03	But	99	40.5/40.8	66	76

REGISTERED CIVIL ENGINEER — DATE 09-08-14

10-13-14
PLANS APPROVAL DATE

REGISTERED PROFESSIONAL ENGINEER — JOHN J. LANE No. C55042 Exp. 06-30-16 CIVIL — STATE OF CALIFORNIA

The State of California or its officers or agents shall not be responsible for the accuracy or completeness of electronic copies of this plan sheet.

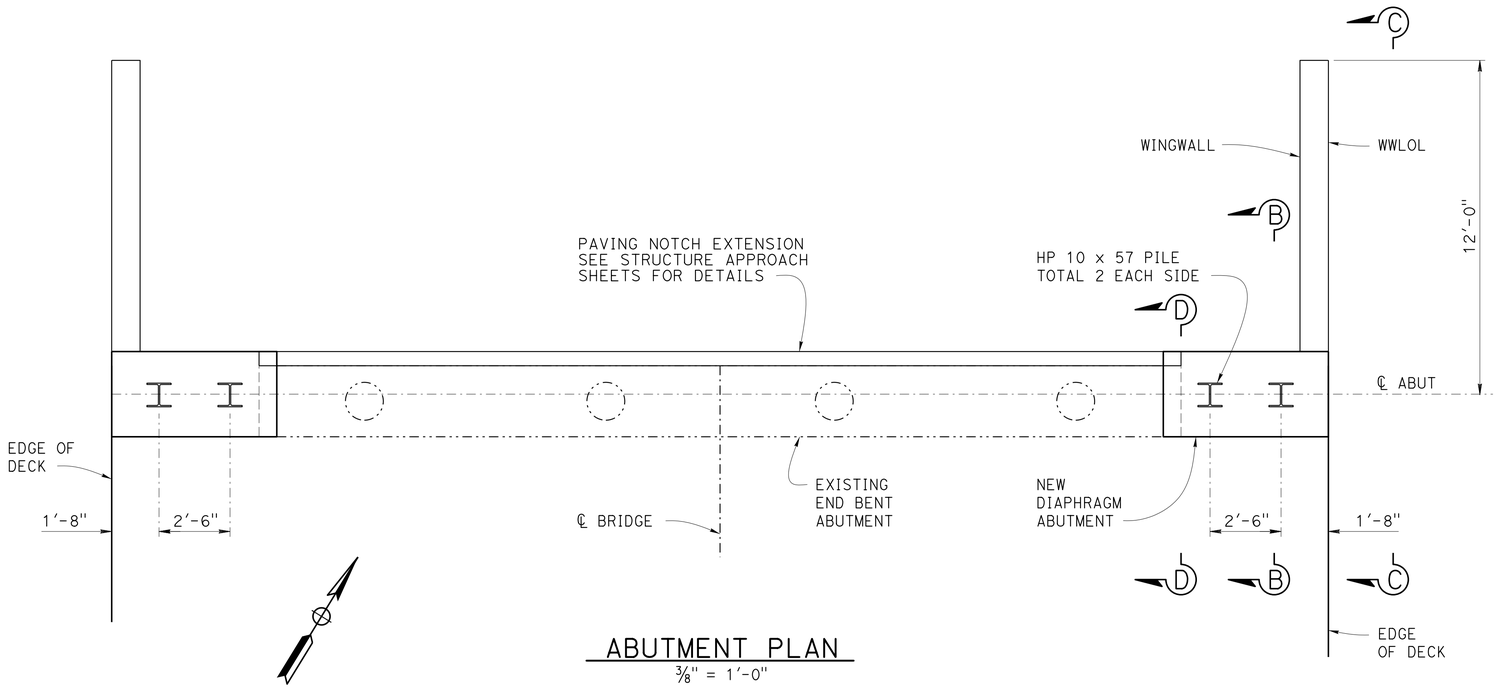

ABUTMENT PLAN

3/8" = 1'-0"

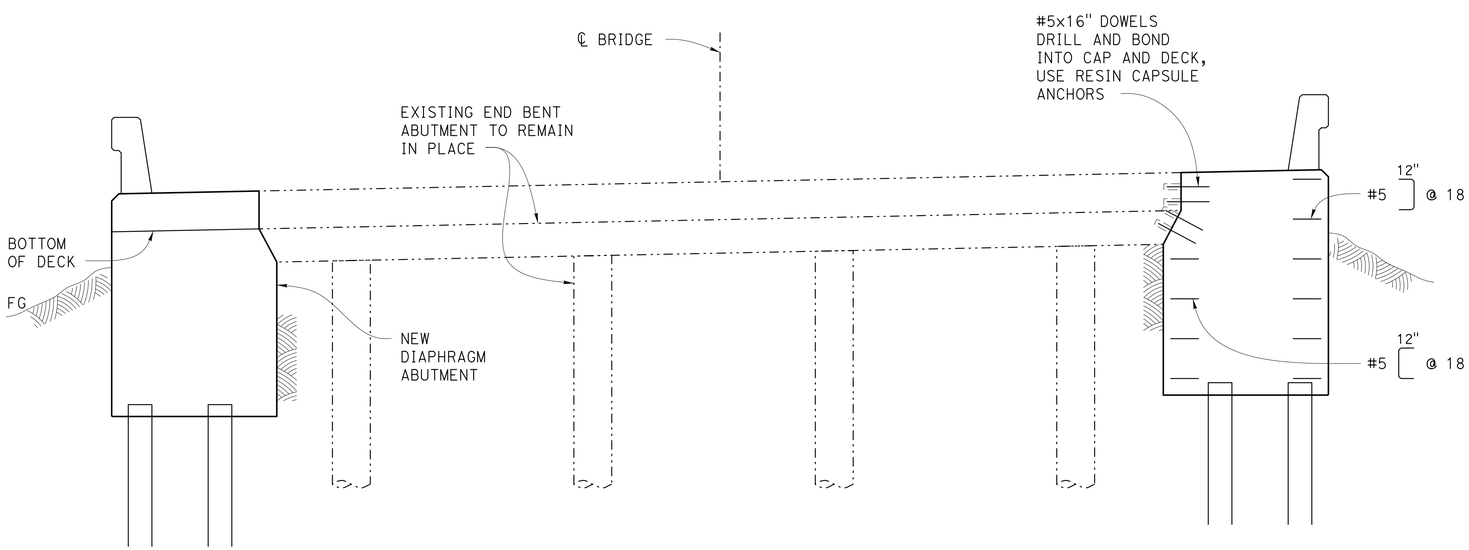

ABUTMENT 7 SHOWN
ABUTMENT 1 SIMILAR

ABUTMENT ELEVATION

3/8" = 1'-0"

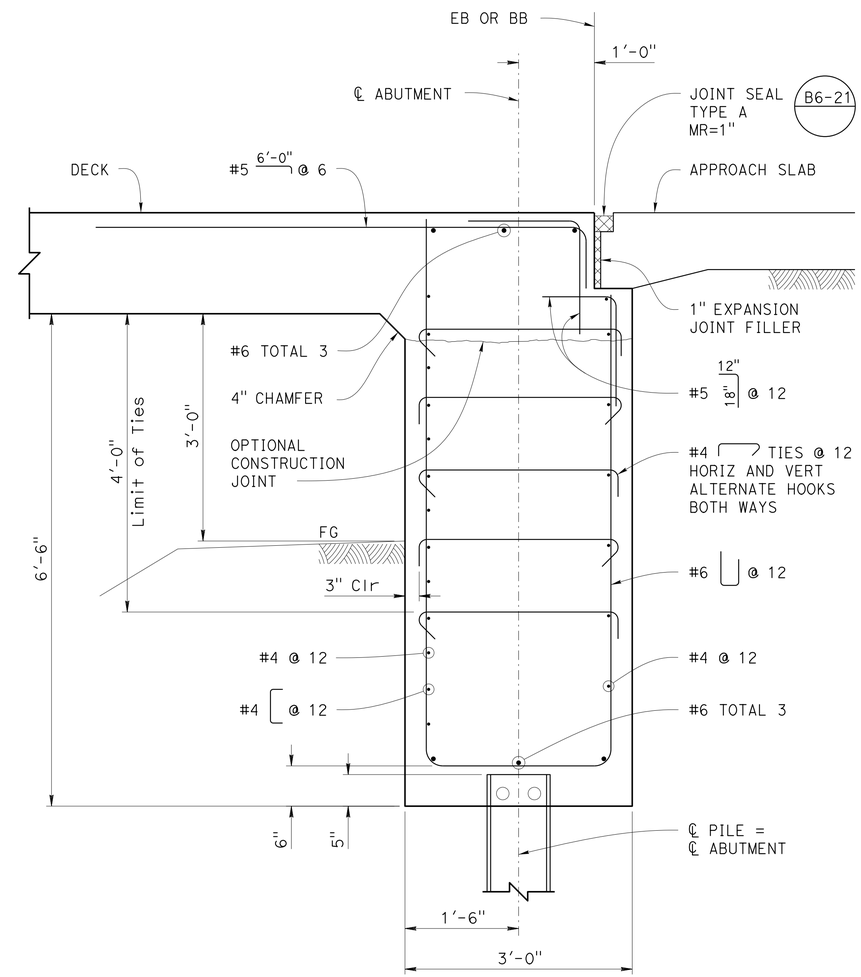

ABUTMENT SECTION B-B

1" = 1'-0"

DESIGN	BY J. Lane	CHECKED D. Dunrud	
DETAILS	BY T. Mason	CHECKED D. Dunrud	
QUANTITIES	BY J. Lane	CHECKED T. Mason	

STATE OF CALIFORNIA
DEPARTMENT OF TRANSPORTATION

DIVISION OF ENGINEERING SERVICES
STRUCTURE DESIGN
DESIGN BRANCH 14

BRIDGE NO. 12-0027
POST MILE 40.65

ROCK CREEK BRIDGE (WIDEN)
ABUTMENT LAYOUT

STRUCTURES DESIGN DETAIL SHEET (ENGLISH) (REV. 09-01-10)

ORIGINAL SCALE IN INCHES FOR REDUCED PLANS 0 1 2 3

UNIT: 3576
PROJECT NUMBER & PHASE: 03000011191
CONTRACT NO.: 03-1F4204

DISREGARD PRINTS BEARING EARLIER REVISION DATES → 3/03/2014 8-15-2014

REVISION DATES | SHEET 4 | OF 14

FILE => 12-0027-f-04abut-lyt.dgn

USERNAME => s119538 DATE PLOTTED => 14-NOV-2014 TIME PLOTTED => 14:39

DIST	COUNTY	ROUTE	POST MILES TOTAL PROJECT	SHEET No.	TOTAL SHEETS
03	But	99	40.5/40.8	67	76

REGISTERED CIVIL ENGINEER — 09-08-14 DATE

10-13-14
PLANS APPROVAL DATE

REGISTERED PROFESSIONAL ENGINEER — JOHN J. LANE — No. C55042 — Exp. 06-30-16 — CIVIL — STATE OF CALIFORNIA

The State of California or its officers or agents shall not be responsible for the accuracy or completeness of electronic copies of this plan sheet.

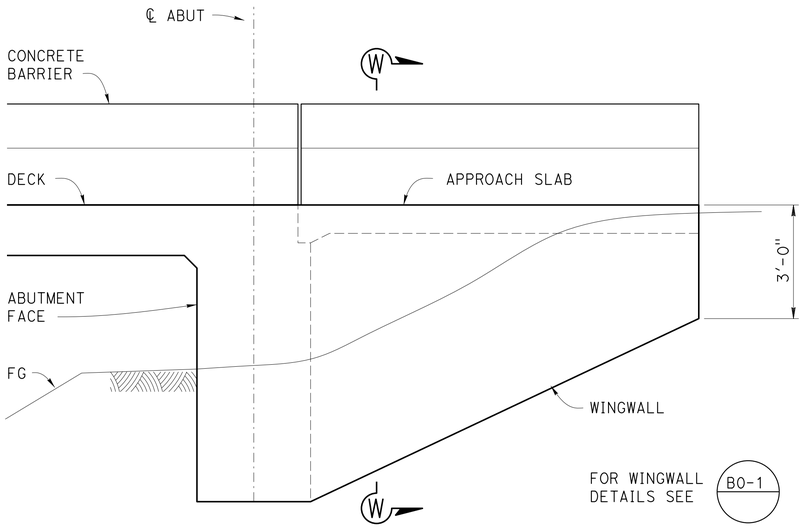

ELEVATION VIEW C-C

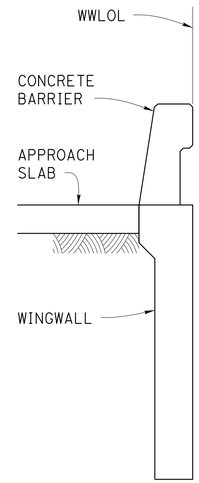

SECTION W-W

WINGWALL DETAILS

½" = 1'-0"

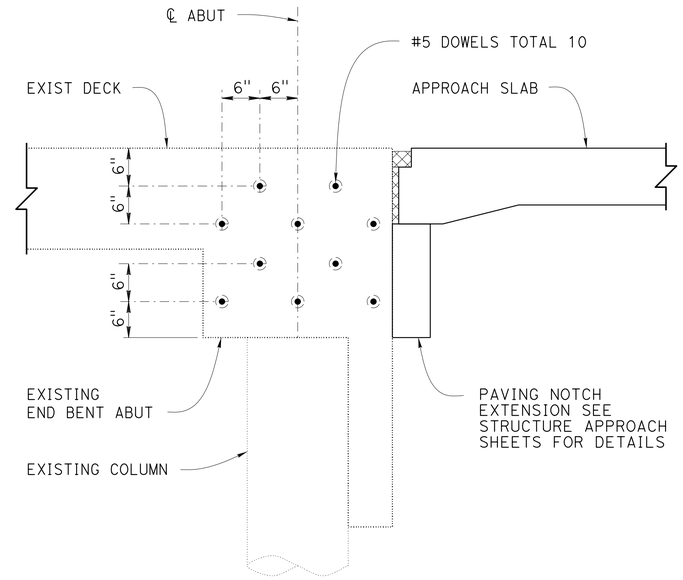

EXISTING ABUTMENT END VIEW D-D

1" = 1'-0"

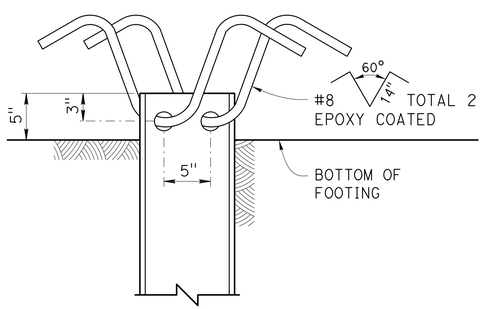

ELEVATION

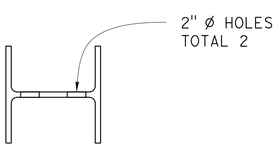

PLAN

STEEL PILE ANCHOR DETAIL

no scale

PILE DATA

LOCATION	PILE TYPE	NOMINAL RESISTANCE COMPRESSION	NOMINAL RESISTANCE TENSION	CUT-OFF ELEVATION	DESIGN TIP ELEVATION	SPECIFIED TIP ELEVATION
Abut 1	HP 10x57	200 kips	-	Left 180.3' Right 181.2'	121'	121'
Pier 2	36" CIDH	780 kips	-	Left 179.0' Right 179.0'	106'	106'
Pier 3	36" CIDH	830 kips	-	Left 173.0' Right 173.0'	97'	97'
Pier 4	36" CIDH	830 kips	-	Left 168.0' Right 168.0'	84'	84'
Pier 5	36" CIDH	830 kips	-	Left 170.0' Right 170.0'	84'	84'
Pier 6	36" CIDH	780 kips	-	Left 175.0' Right 175.0'	101'	101'
Abut 7	HP 10x57	200 kips	-	Left 180.0' Right 180.9'	121'	121'

The Design Tip Elevations are controlled by Compression.

The Specificed Tip Elevation shall not be raised.

The load carrying capacity of the CIDH piles are based on skin friction and the CIDH piles have not been designed to develop end bearing.

	BY	CHECKED
DESIGN	J. Lane	D. Dunrud
DETAILS	T. Mason	D. Dunrud
QUANTITIES	J. Lane	T. Mason

STATE OF CALIFORNIA
DEPARTMENT OF TRANSPORTATION

DIVISION OF ENGINEERING SERVICES
STRUCTURE DESIGN
DESIGN BRANCH 14

BRIDGE NO. 12-0027
POST MILE 40.65

ROCK CREEK BRIDGE (WIDEN)
ABUTMENT DETAILS

STRUCTURES DESIGN DETAIL SHEET (ENGLISH) (REV. 09-01-10)

ORIGINAL SCALE IN INCHES FOR REDUCED PLANS 0 1 2 3

UNIT: 3576
PROJECT NUMBER & PHASE: 03000011191
CONTRACT NO.: 03-1F4204

DISREGARD PRINTS BEARING EARLIER REVISION DATES
REVISION DATES: 3/04/2014 8-15-2014

SHEET 5 OF 14

FILE => 12-0027-f-05abut-det.dgn

USERNAME => s119538 DATE PLOTTED => 14-NOV-2014 TIME PLOTTED => 14:39

DIST	COUNTY	ROUTE	POST MILES TOTAL PROJECT	SHEET No.	TOTAL SHEETS
03	But	99	40.5/40.8	68	76

REGISTERED CIVIL ENGINEER — DATE 09-08-14

10-13-14
PLANS APPROVAL DATE

REGISTERED PROFESSIONAL ENGINEER — JOHN J. LANE — No. C55042 — Exp. 06-30-16 — CIVIL — STATE OF CALIFORNIA

The State of California or its officers or agents shall not be responsible for the accuracy or completeness of electronic copies of this plan sheet.

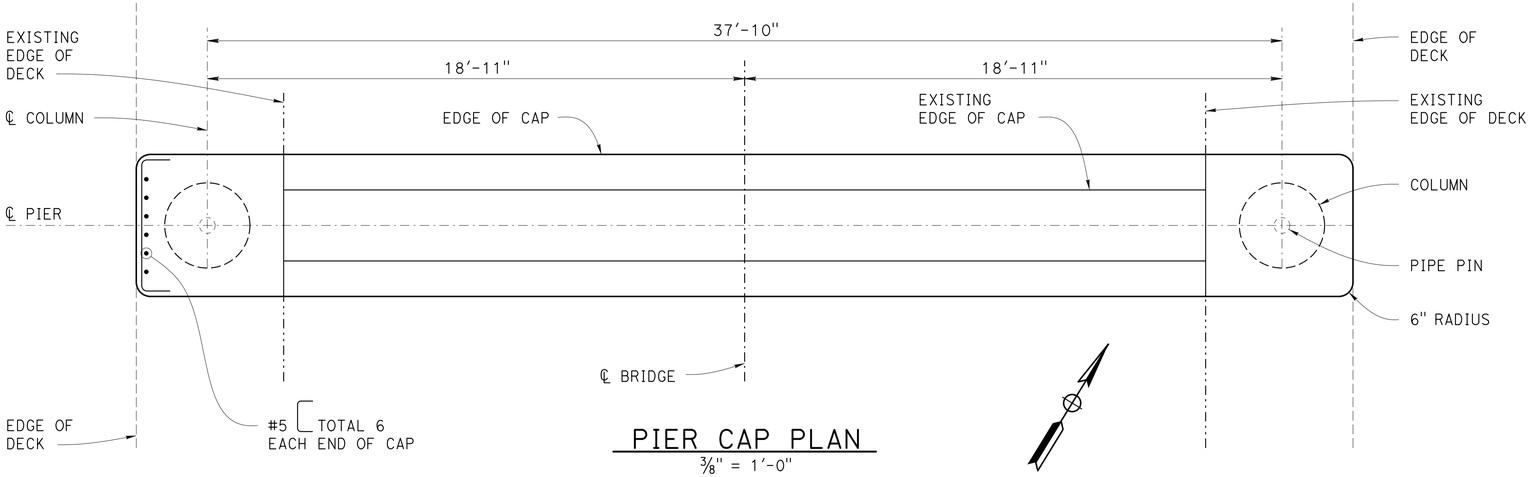

PIER CAP PLAN
3/8" = 1'-0"

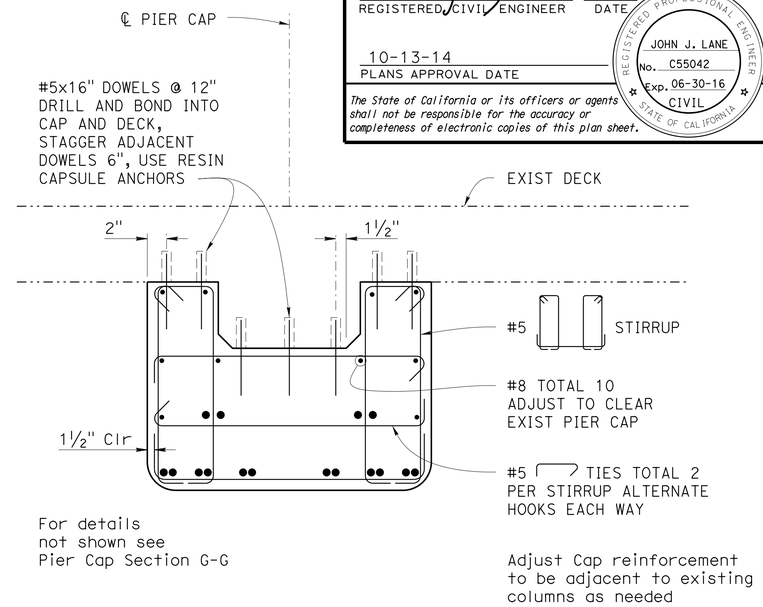

For details not shown see Pier Cap Section G-G

Adjust Cap reinforcement to be adjacent to existing columns as needed

PIER CAP SECTION H-H
3/4" = 1'-0"

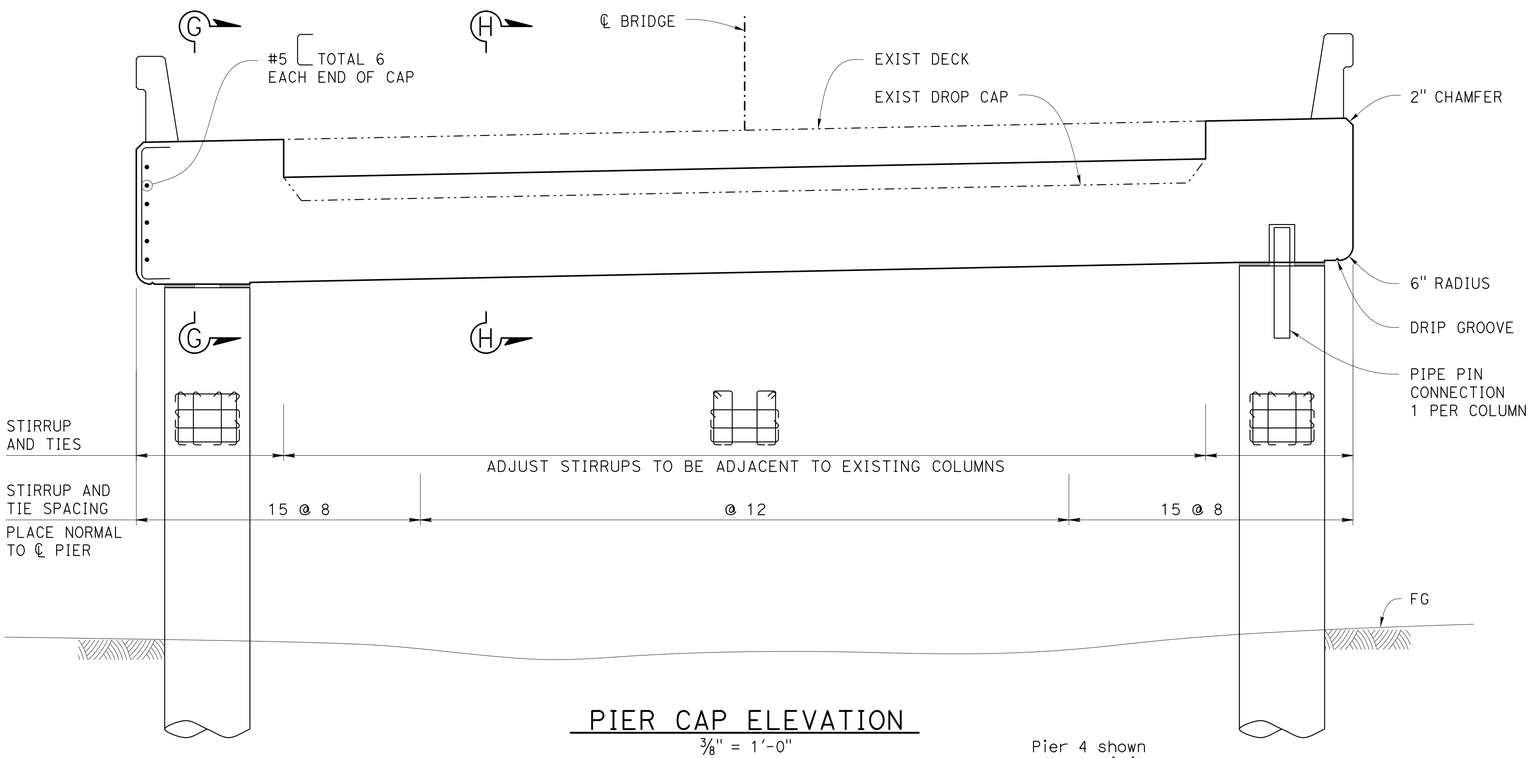

PIER CAP ELEVATION
3/8" = 1'-0"

Pier 4 shown others similar

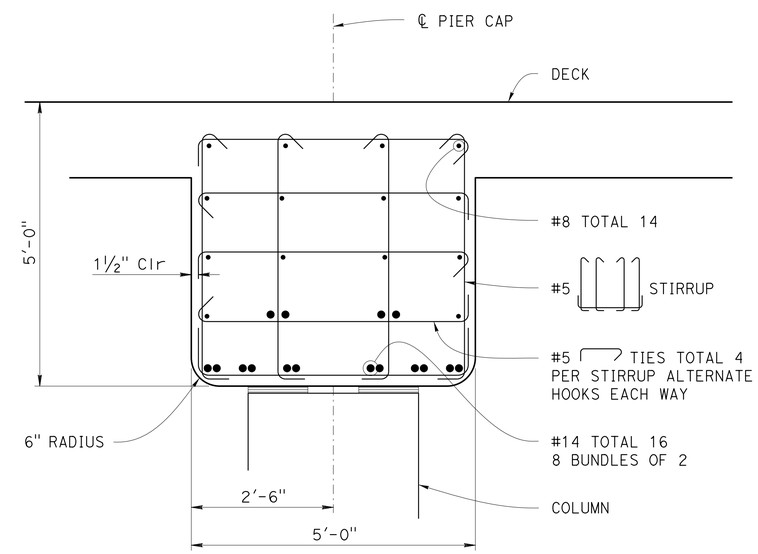

PIER CAP SECTION G-G
3/4" = 1'-0"

DESIGN	BY J. Lane	CHECKED D. Dunrud	
DETAILS	BY T. Mason	CHECKED D. Dunrud	
QUANTITIES	BY J. Lane	CHECKED T. Mason	

STATE OF CALIFORNIA
DEPARTMENT OF TRANSPORTATION

DIVISION OF ENGINEERING SERVICES
STRUCTURE DESIGN
DESIGN BRANCH 14

BRIDGE NO. 12-0027
POST MILE 40.65

ROCK CREEK BRIDGE (WIDEN)
PIER LAYOUT

STRUCTURES DESIGN DETAIL SHEET (ENGLISH) (REV. 09-01-10)

ORIGINAL SCALE IN INCHES FOR REDUCED PLANS 0 1 2 3

UNIT: 3576
PROJECT NUMBER & PHASE: 03000011191
CONTRACT NO.: 03-1F4204

DISREGARD PRINTS BEARING EARLIER REVISION DATES

REVISION DATES: 3/04/2014 8-15-2014

SHEET 6 OF 14

FILE => 12-0027-1-06pier-lyt.dgn

USERNAME => s119538 DATE PLOTTED => 14-NOV-2014 TIME PLOTTED => 14:40

DIST	COUNTY	ROUTE	POST MILES TOTAL PROJECT	SHEET No.	TOTAL SHEETS
03	But	99	40.5/40.8	69	76

REGISTERED CIVIL ENGINEER — 09-08-14 DATE

10-13-14
PLANS APPROVAL DATE

REGISTERED PROFESSIONAL ENGINEER — JOHN J. LANE — No. C55042 — Exp. 06-30-16 — CIVIL — STATE OF CALIFORNIA

The State of California or its officers or agents shall not be responsible for the accuracy or completeness of electronic copies of this plan sheet.

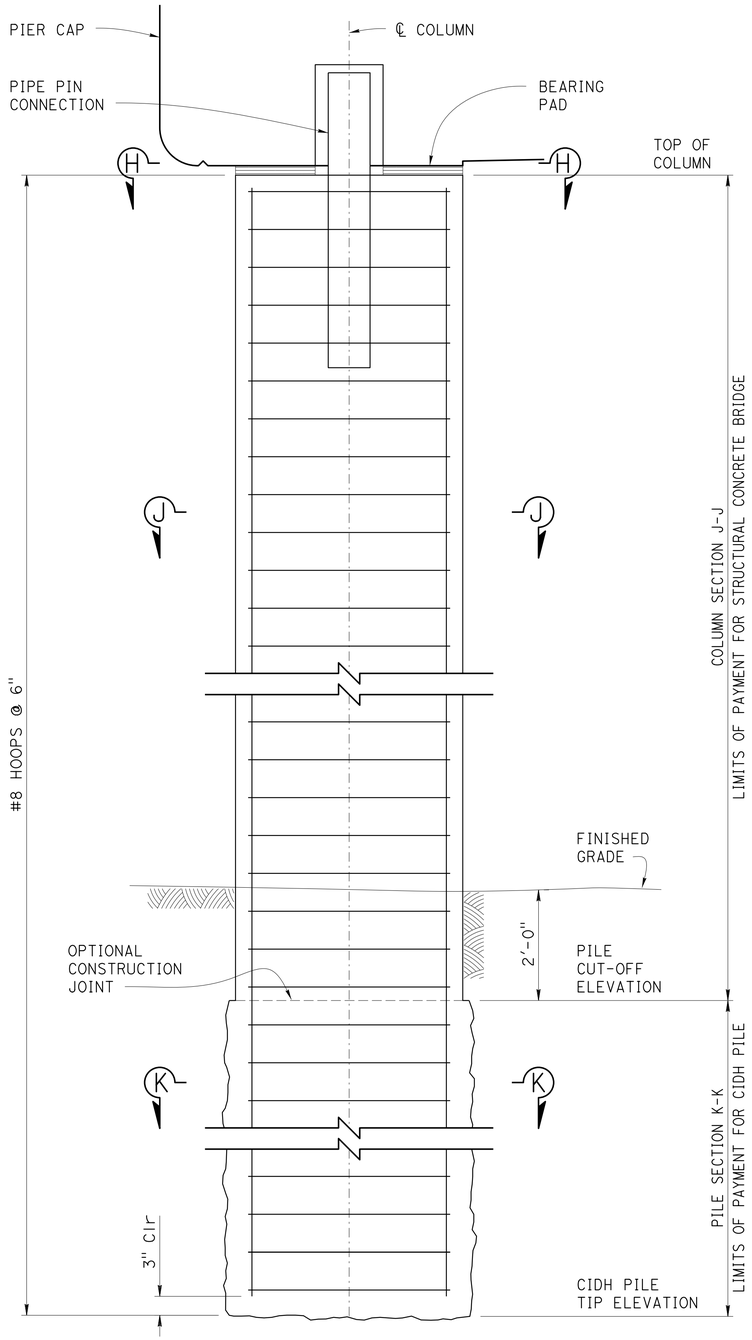

COLUMN - CIDH PILE ELEVATION

no scale

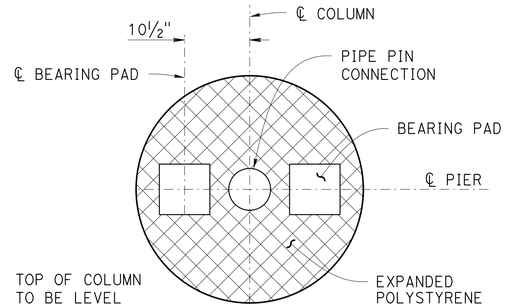

TOP OF COLUMN VIEW H-H

1" = 1'-0"

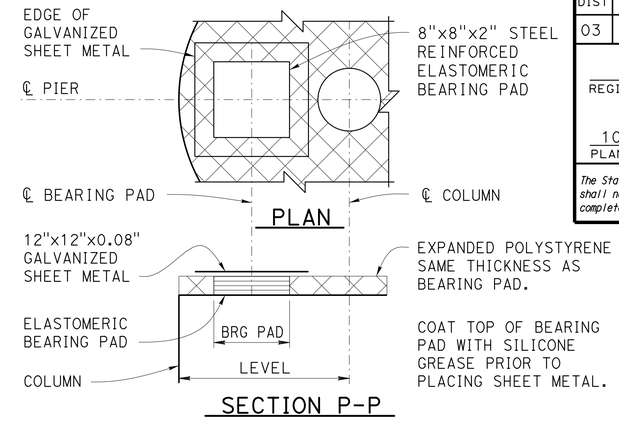

BEARING PAD DETAIL

no scale

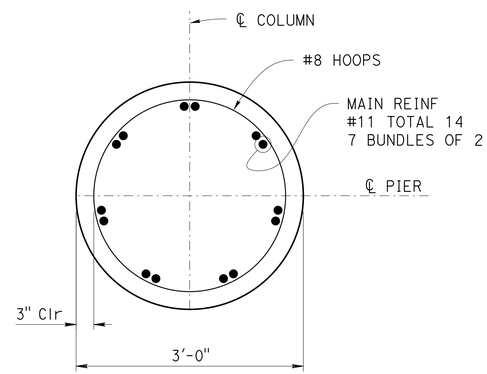

COLUMN SECTION J-J

1" = 1'-0"

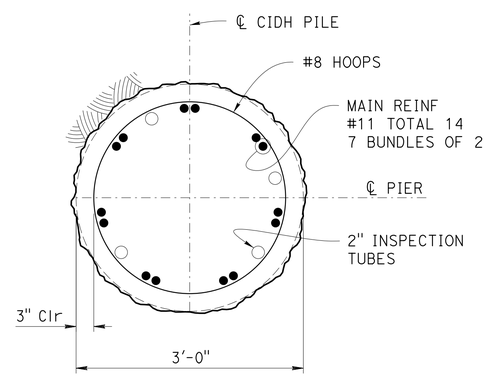

PILE SECTION K-K

1" = 1'-0"

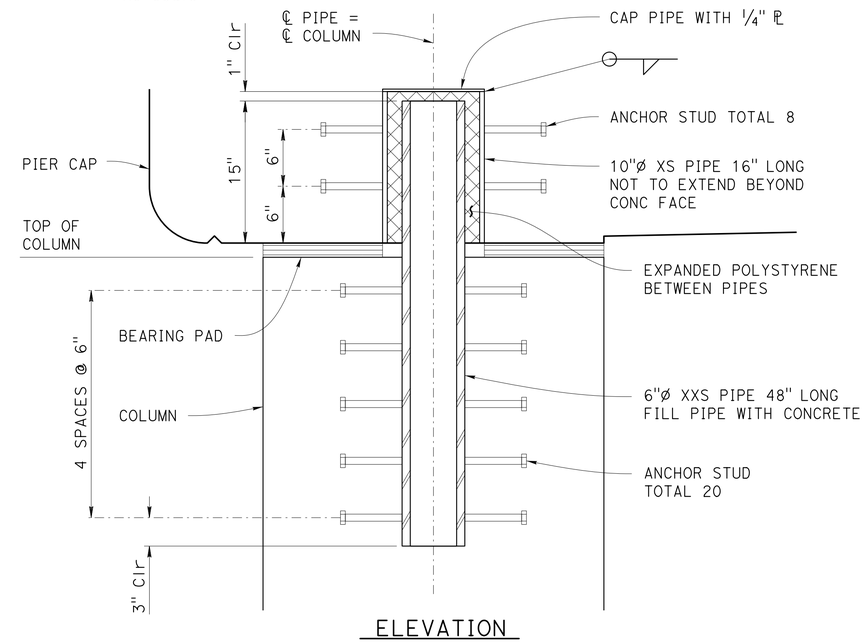

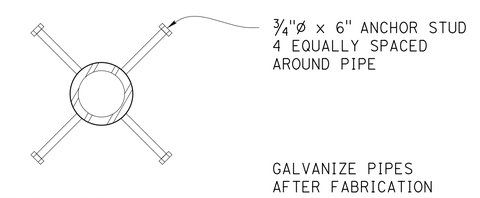

PIPE PIN CONNECTION

1½" = 1'-0"

DESIGN	BY J. Lane	CHECKED D. Dunrud
DETAILS	BY T. Mason	CHECKED D. Dunrud
QUANTITIES	BY J. Lane	CHECKED T. Mason

STATE OF CALIFORNIA
DEPARTMENT OF TRANSPORTATION

DIVISION OF ENGINEERING SERVICES
STRUCTURE DESIGN
DESIGN BRANCH 14

BRIDGE NO. 12-0027
POST MILE 40.65

ROCK CREEK BRIDGE (WIDEN)
PIER DETAILS

STRUCTURES DESIGN DETAIL SHEET (ENGLISH) (REV. 09-01-10)

ORIGINAL SCALE IN INCHES FOR REDUCED PLANS 0 1 2 3

UNIT: 3576
PROJECT NUMBER & PHASE: 03000011191
CONTRACT NO.: 03-1F4204

DISREGARD PRINTS BEARING EARLIER REVISION DATES

REVISION DATES: 3/03/2014 8-15-2014

SHEET 7 OF 14

FILE => 12-0027-i-07pier-det.dgn

USERNAME => s119538 DATE PLOTTED => 14-NOV-2014 TIME PLOTTED => 14:40

DIST	COUNTY	ROUTE	POST MILES TOTAL PROJECT	SHEET No.	TOTAL SHEETS
03	But	99	40.5/40.8	70	76

REGISTERED CIVIL ENGINEER — DATE 09-08-14

10-13-14
PLANS APPROVAL DATE

REGISTERED PROFESSIONAL ENGINEER — JOHN J. LANE — No. C55042 — Exp. 06-30-16 — CIVIL — STATE OF CALIFORNIA

The State of California or its officers or agents shall not be responsible for the accuracy or completeness of electronic copies of this plan sheet.

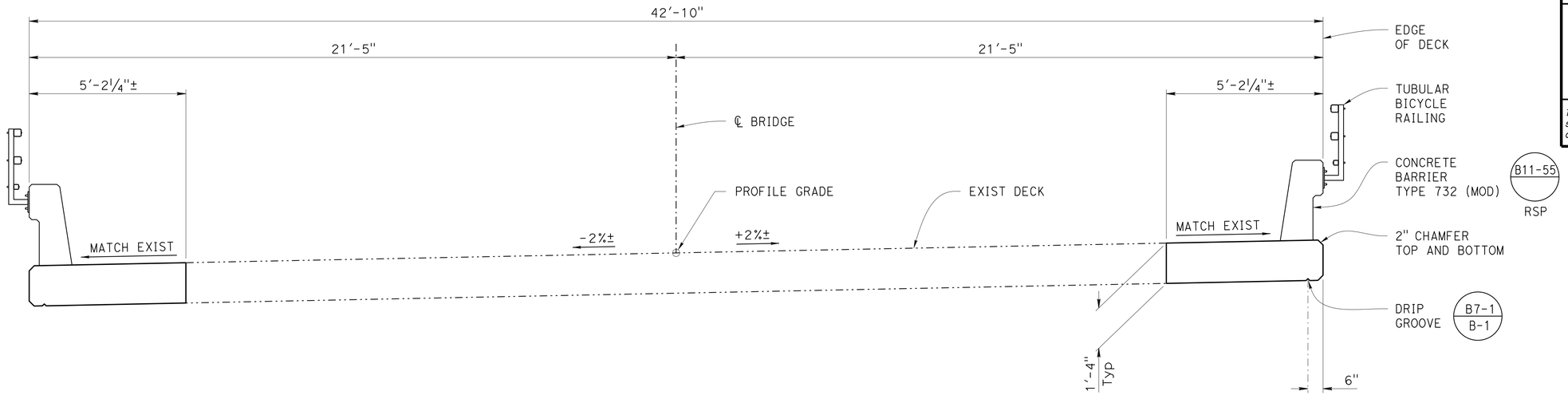

TYPICAL SECTION

½" = 1'-0"

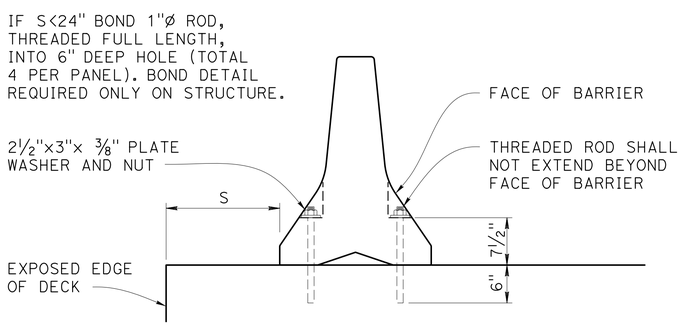

TEMPORARY RAILING TYPE K ATTACHMENT DETAILS

no scale

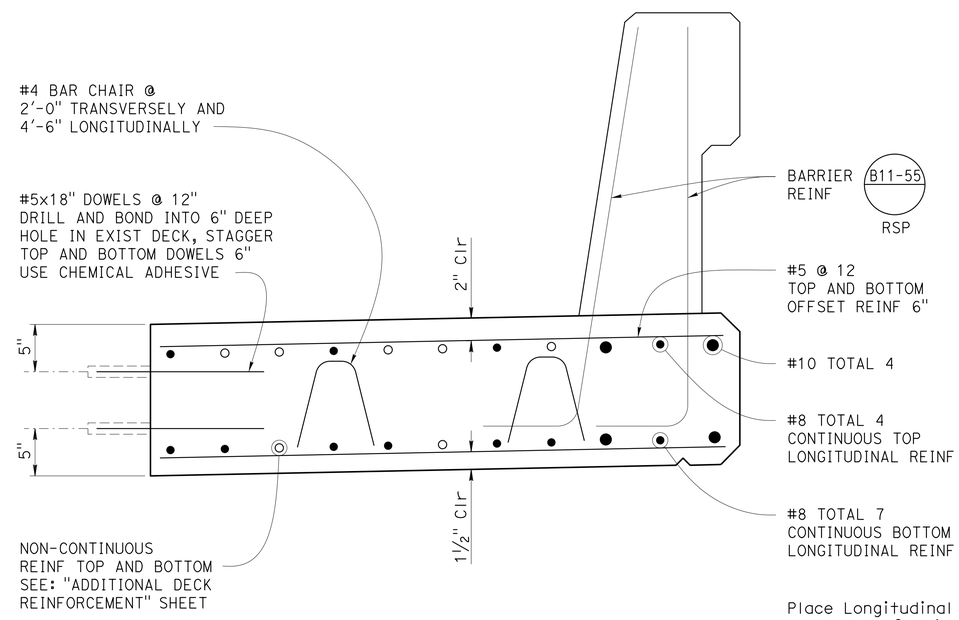

Place Longitudinal reinf parallel to ℄ Bridge and at equal spacing

Right side shown, Left side similar

PART TYPICAL SECTION

1½" = 1'-0"

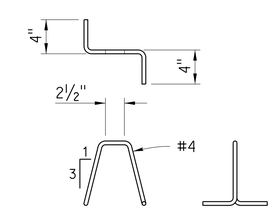

BAR CHAIR DETAIL

no scale

DESIGN	BY J. Lane	CHECKED D. Dunrud	
DETAILS	BY T. Mason	CHECKED D. Dunrud	
QUANTITIES	BY J. Lane	CHECKED T. Mason	

STATE OF CALIFORNIA
DEPARTMENT OF TRANSPORTATION

DIVISION OF ENGINEERING SERVICES
STRUCTURE DESIGN
DESIGN BRANCH 14

BRIDGE NO. 12-0027
POST MILE 40.65

ROCK CREEK BRIDGE (WIDEN)
TYPICAL SECTION

STRUCTURES DESIGN DETAIL SHEET (ENGLISH) (REV. 09-01-10)

ORIGINAL SCALE IN INCHES FOR REDUCED PLANS 0 1 2 3

UNIT: 3576
PROJECT NUMBER & PHASE: 03000011191
CONTRACT NO.: 03-1F4204

DISREGARD PRINTS BEARING EARLIER REVISION DATES

REVISION DATES: 3/07/2014 8-15-2014

SHEET 8 OF 14

FILE => 12-0027-k-08typ-sect.dgn

USERNAME => s119538 DATE PLOTTED => 14-NOV-2014 TIME PLOTTED => 14:40

DIST	COUNTY	ROUTE	POST MILES TOTAL PROJECT	SHEET No.	TOTAL SHEETS
03	But	99	40.5/40.8	71	76

REGISTERED CIVIL ENGINEER — DATE 09-08-14

10-13-14
PLANS APPROVAL DATE

REGISTERED PROFESSIONAL ENGINEER — JOHN J. LANE — No. C55042 — Exp. 06-30-16 — CIVIL — STATE OF CALIFORNIA

The State of California or its officers or agents shall not be responsible for the accuracy or completeness of electronic copies of this plan sheet.

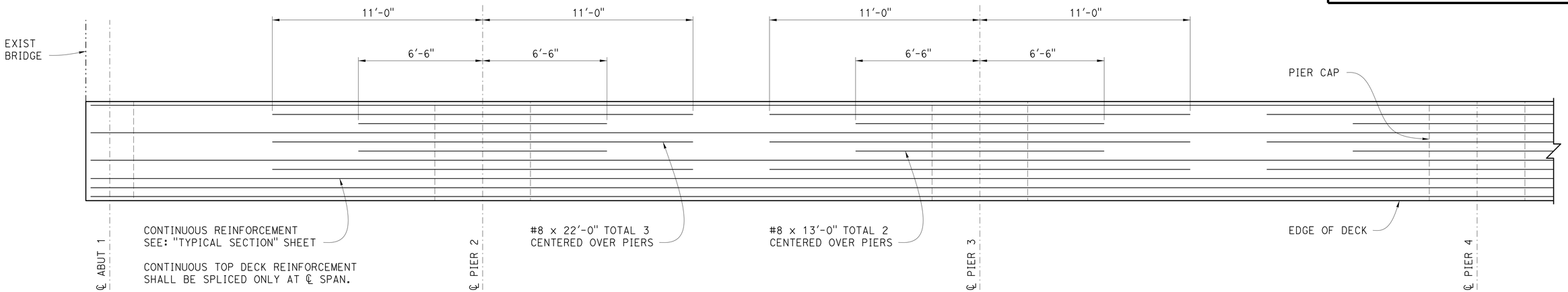

ADDITIONAL TOP REINFORCEMENT LAYOUT

3/8" = 1'-0"

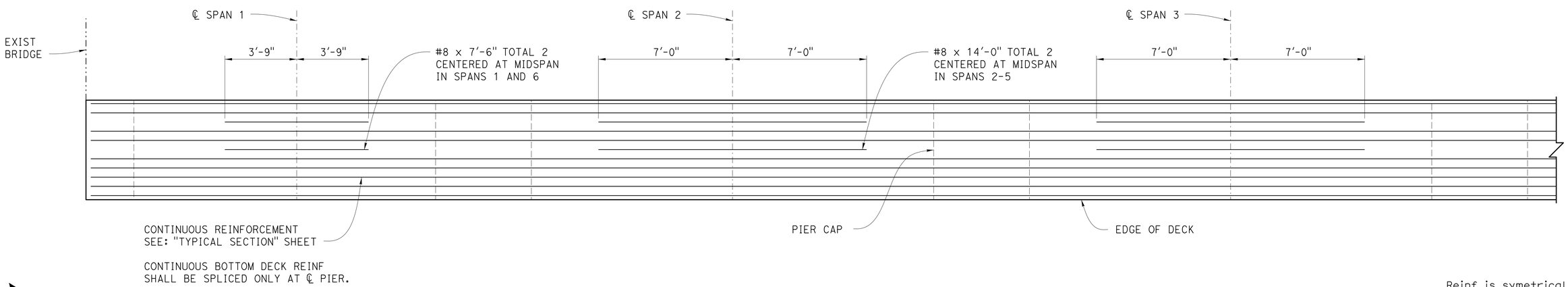

ADDITIONAL BOTTOM REINFORCEMENT LAYOUT

3/8" = 1'-0"

Reinf is symetrical about the ℄ Pier 4

Right side shown, Left side similar

DESIGN	BY J. Lane	CHECKED D. Dunrud	
DETAILS	BY T. Mason	CHECKED D. Dunrud	
QUANTITIES	BY J. Lane	CHECKED T. Mason	

STATE OF CALIFORNIA
DEPARTMENT OF TRANSPORTATION

DIVISION OF ENGINEERING SERVICES
STRUCTURE DESIGN
DESIGN BRANCH 14

BRIDGE NO. 12-0027
POST MILE 40.65

ROCK CREEK BRIDGE (WIDEN)
DECK REINFORCEMENT DETAILS

STRUCTURES DESIGN DETAIL SHEET (ENGLISH) (REV. 09-01-10)

ORIGINAL SCALE IN INCHES FOR REDUCED PLANS 0 1 2 3

UNIT: 3576
PROJECT NUMBER & PHASE: 03000011191
CONTRACT NO.: 03-1F4204

DISREGARD PRINTS BEARING EARLIER REVISION DATES

REVISION DATES: 3/02/2014 8-15-2014

SHEET 9 OF 14

FILE => 12-0027-o-09deck-reinf.dgn

USERNAME => s119538 DATE PLOTTED => 14-NOV-2014 TIME PLOTTED => 14:40

DIST	COUNTY	ROUTE	POST MILES TOTAL PROJECT	SHEET No.	TOTAL SHEETS
03	But	99	40.5/40.8	72	76

REGISTERED CIVIL ENGINEER — DATE 09-08-14

10-13-14
PLANS APPROVAL DATE

The State of California or its officers or agents shall not be responsible for the accuracy or completeness of electronic copies of this plan sheet.

REGISTERED PROFESSIONAL ENGINEER — JOHN J. LANE — No. C55042 — Exp. 06-30-16 — CIVIL — STATE OF CALIFORNIA

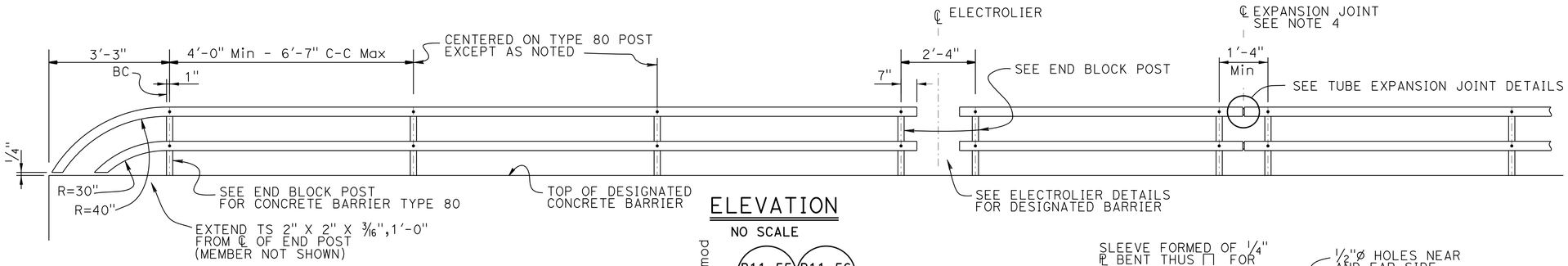

ELEVATION
NO SCALE

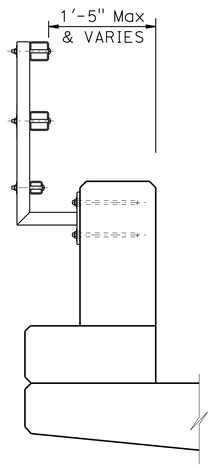

NOTE:
For details not shown, see "TYPE 732 OR 736"

TYPE 80 END BLOCK POST
1" = 1'-0"

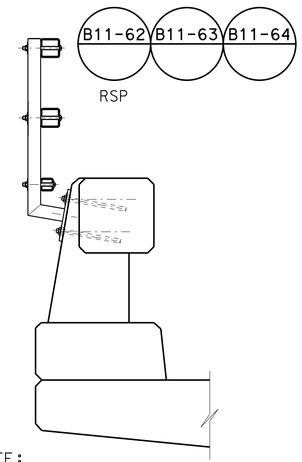

NOTE:
For details not shown, see "TYPE 732 OR 736"

TYPE 80
1" = 1'-0"

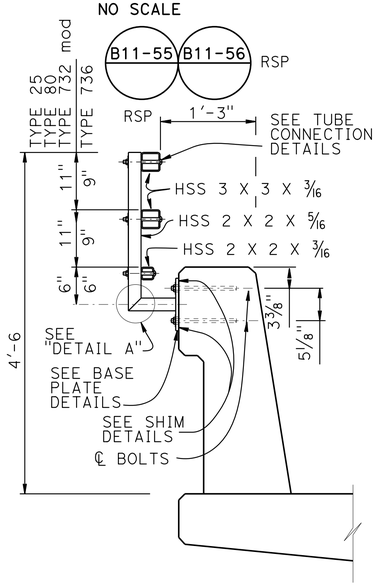

TYPE 732 OR 736
1" = 1'-0"

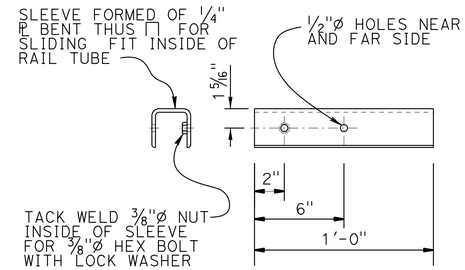

SLEEVE DETAIL
NO SCALE

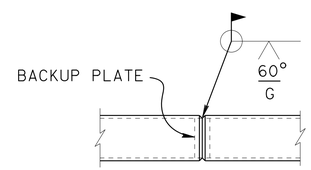

WELDED SPLICE DETAIL
NO SCALE

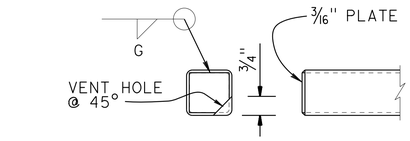

RAIL CAP DETAIL
NO SCALE

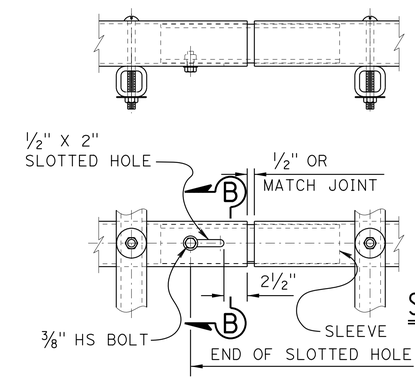

SECTION B-B
NO SCALE

TUBE EXPANSION JOINT DETAILS
NO SCALE

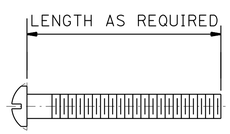

ROUND HEAD SCREW DETAIL
NO SCALE

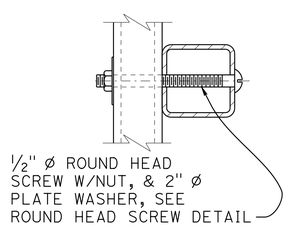

TUBE CONNECTION DETAIL
NO SCALE

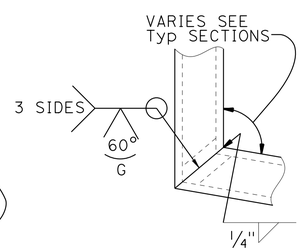

DETAIL A
NO SCALE

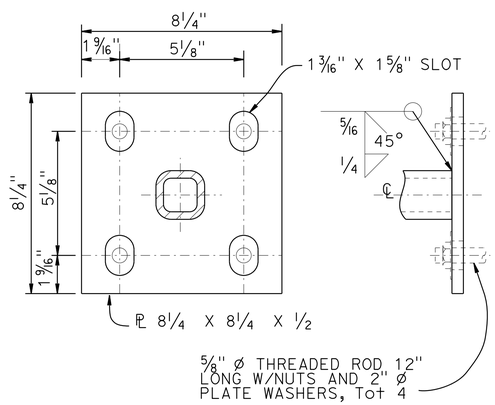

BASE PLATE DETAIL
NO SCALE

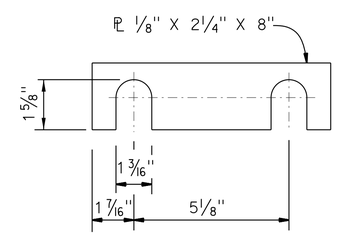

SHIM DETAILS
NO SCALE

NOTES:

1. Post shall be normal to railing.
2. Rail tubes shall be shop bent or fabricated to fit horizontal curve when radius is less than 12".
3. Tube expansion joints shall be located in the tubes spanning deck or wall joints. Increase joint width in tubes to match expansion joint width and increase sleeve length correspondingly.
4. Top rail tube shall be continuous over not less than two posts except a short post spacing is permitted near deck or wall joints, electroliers, or other rail discontinuities as noted.
5. See Project Plans for limits of tubular hand railing.

ROCK CREEK BRIDGE WIDENING
CONCRETE BARRIER TYPE 80, 732 & 736
TUBULAR BICYCLE RAILING DETAILS

STANDARD DRAWING
FILE NO. xs16-035
APPROVAL DATE August 2012

STATE OF CALIFORNIA
DEPARTMENT OF TRANSPORTATION

DIVISION OF ENGINEERING SERVICES

BRIDGE NO. 12-0027
POST MILE 40.65

DS OSD 2147A (ENGLISH STANDARD DRAWING "XS" BORDER REV. (02-02-11))

ORIGINAL SCALE IN INCHES FOR REDUCED PLANS 0 1 2 3

UNIT: 3576
PROJECT NUMBER & PHASE: 03000011191
CONTRACT NO.: 03-1F4204

DISREGARD PRINTS BEARING EARLIER REVISION DATES

REVISION DATES 8/7/12

SHEET 10 OF 14

FILE => 12-0027-t-10bike-railing-det.dgn

USERNAME => s119538 DATE PLOTTED => 14-NOV-2014 TIME PLOTTED => 14:40

DIST	COUNTY	ROUTE	POST MILES TOTAL PROJECT	SHEET No.	TOTAL SHEETS
03	But	99	40.5/40.8	73	76

REGISTERED CIVIL ENGINEER — DATE 09-08-14

10-13-14
PLANS APPROVAL DATE

REGISTERED PROFESSIONAL ENGINEER — JOHN J. LANE — No. C55042 — Exp. 06-30-16 — CIVIL — STATE OF CALIFORNIA

The State of California or its officers or agents shall not be responsible for the accuracy or completeness of electronic copies of this plan sheet.

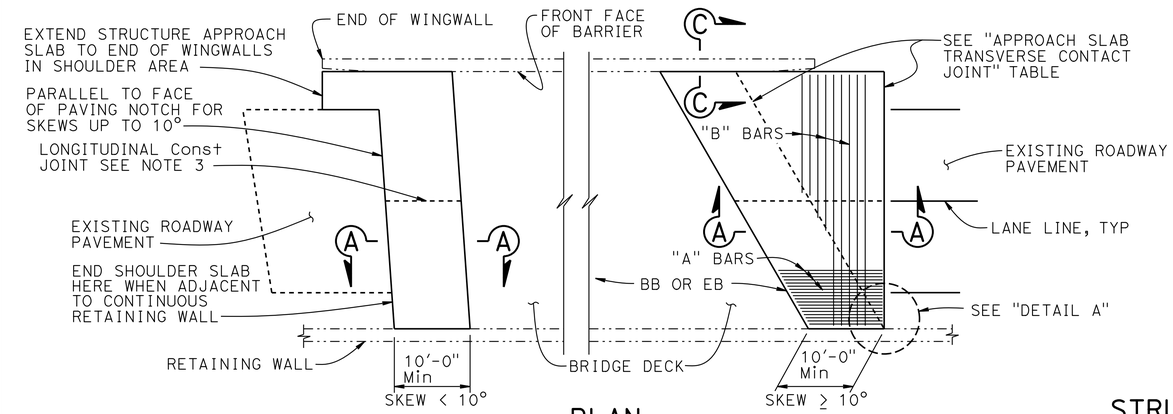

PLAN
1" = 10'

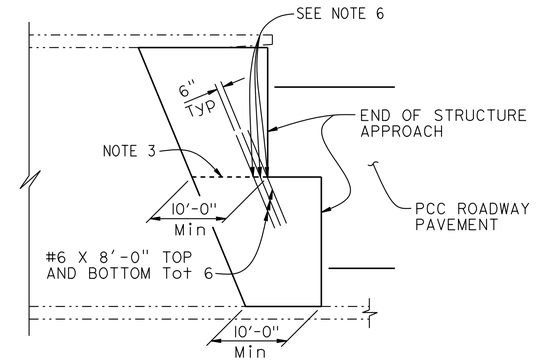

STRUCTURE APPROACH - END STAGGER DETAIL
NO SCALE

APPROACH SLAB TRANSVERSE CONTACT JOINT		
APPROACH SKEW	WITH AC ROADWAY PAVEMENT	WITH PCC ROADWAY PAVEMENT
< 10°	PARALLEL TO FACE OF PN	PARALLEL TO FACE OF PN
10° - 45°	PARALLEL TO FACE OF PN USE "DETAIL A"	STAGGER LINES 24' TO 36' APART
> 45°	PARALLEL TO FACE OF PN USE "DETAIL A"	STAGGER AT EACH LANE LINE

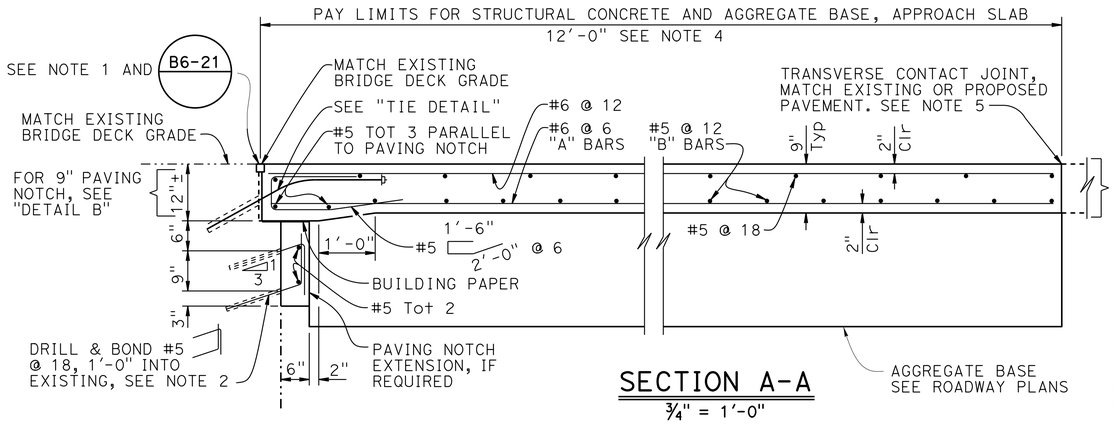

SECTION A-A
¾" = 1'-0"

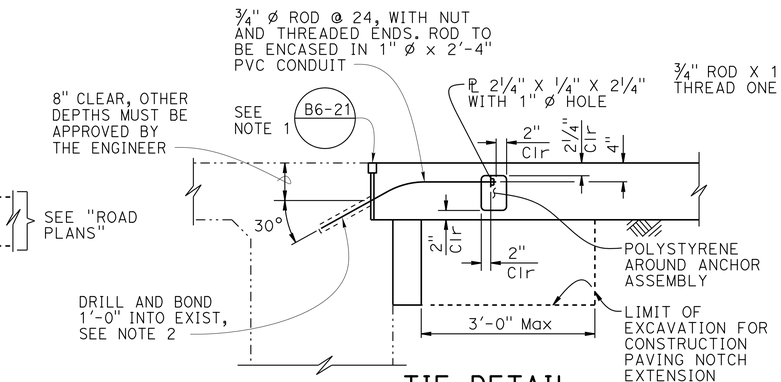

TIE DETAIL
¾" = 1'-0"

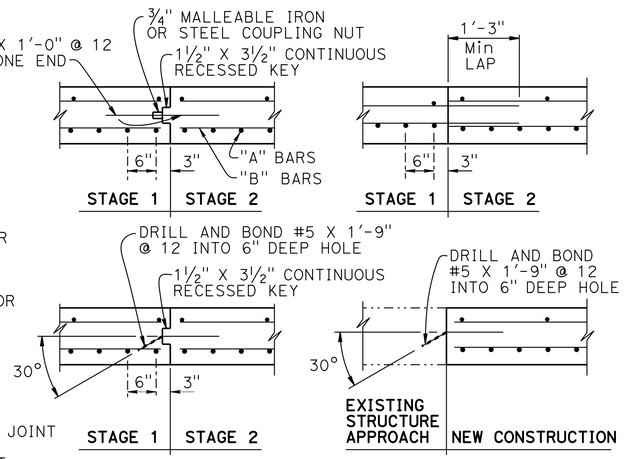

LONGITUDINAL CONSTRUCTION JOINT ALTERNATIVES
¾" = 1'-0"

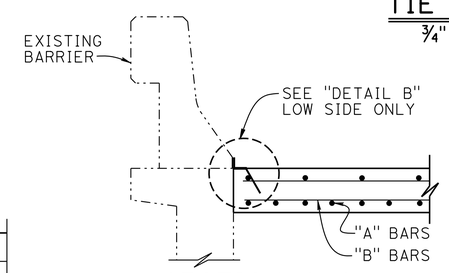

SECTION C-C
¾" = 1'-0"

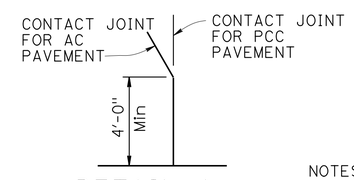

DETAIL A
NO SCALE

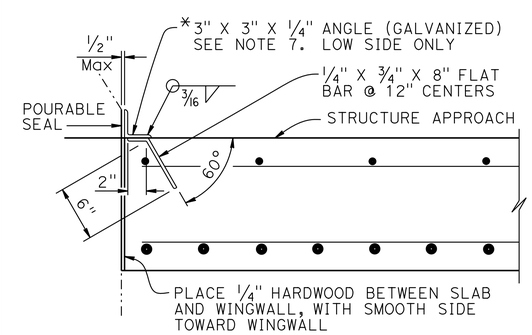

*(TO BE USED WITH CONCRETE BARRIER WITH VERTICAL FACE)

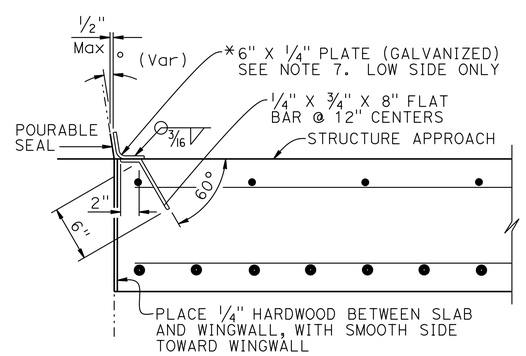

*(TO BE USED WITH CONCRETE BARRIER WITH SLOPING FACE)

DETAIL B
1½" = 1'-0"

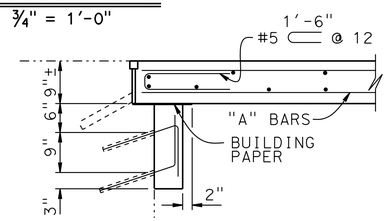

DETAIL B
¾" = 1'-0"

NOTE: For details not shown, see "SECTION A-A"

NOTES:

1. For details not noted or shown, see Structure Plans. Adjust bar reinforcement to clear a sawcut for sealed joint, when required
2. Space to avoid existing prestress anchorages and main reinforcement
3. Longitudinal construction joints, when permitted by the Engineer, shall be located on lane lines
4. Transverse contact joint shall be a minimum of 5' from an existing or constructed weakened plane joint
5. For transverse contact joint with new PCC paving, refer to Standard Plan RSP P10
6. Couplers are required for stage construction
7. End angle or plate at beginning of barrier transition, end of wingwall or end of structure approach as applicable.

NOTE:
THE CONTRACTOR SHALL VERIFY ALL CONTROLLING FIELD DIMENSIONS BEFORE ORDERING OR FABRICATING ANY MATERIAL.

	BY	CHECKED
DESIGN	J. Lane	D. Dunrud
DETAILS	various	D. Dunrud
QUANTITIES	J. Lane	T. Mason

STATE OF CALIFORNIA
DEPARTMENT OF TRANSPORTATION

DIVISION OF ENGINEERING SERVICES
STRUCTURE DESIGN
DESIGN BRANCH 14

BRIDGE NO. 12-0027
POST MILE 40.65

ROCK CREEK BRIDGE (WIDEN)
STRUCTURE APPROACH

STRUCTURES DESIGN DETAIL SHEET (ENGLISH) (REV. 09-01-10)

ORIGINAL SCALE IN INCHES FOR REDUCED PLANS 0 1 2 3

UNIT: 3576
PROJECT NUMBER & PHASE: 03000011191
CONTRACT NO.: 03-1F4204

DISREGARD PRINTS BEARING EARLIER REVISION DATES
REVISION DATES 3/07/2014 8-15-2014

SHEET 11 OF 14

FILE => 12-0027-u-11str-appr.dgn

USERNAME => s119538 DATE PLOTTED => 14-NOV-2014 TIME PLOTTED => 14:40

DIST	COUNTY	ROUTE	POST MILES TOTAL PROJECT	SHEET No.	TOTAL SHEETS
03	But	99	40.5/40.8	74	76

REGISTERED CIVIL ENGINEER — 09-08-14 DATE

10-13-14
PLANS APPROVAL DATE

REGISTERED PROFESSIONAL ENGINEER — JOHN J. LANE No. C55042 Exp. 06-30-16 CIVIL — STATE OF CALIFORNIA

The State of California or its officers or agents shall not be responsible for the accuracy or completeness of electronic copies of this plan sheet.

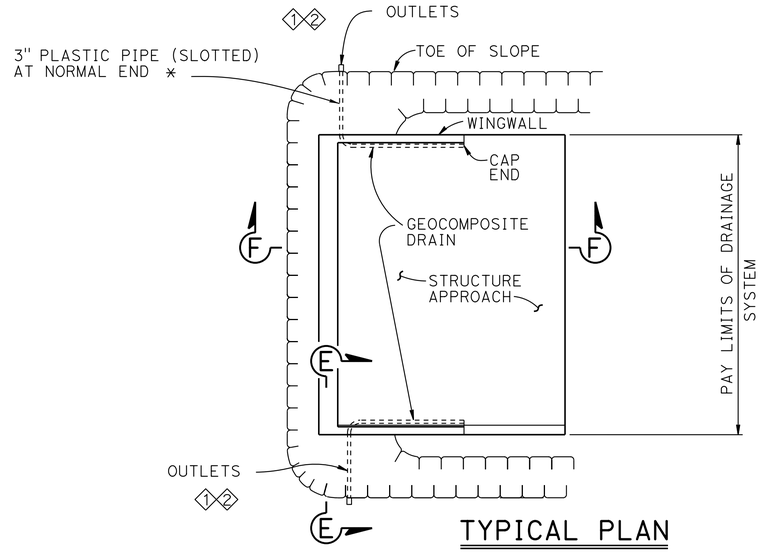

TYPICAL PLAN

1" = 10'

* FOR PIPE LAYOUT AT STAGGERED END, SEE "DETAIL B"

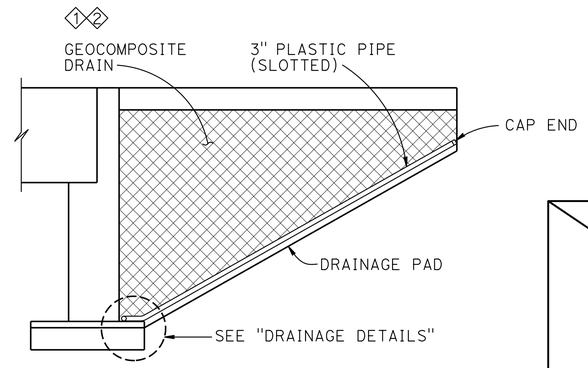

CANTILEVER WINGWALL

SECTION F-F

1/4" = 1'-0"

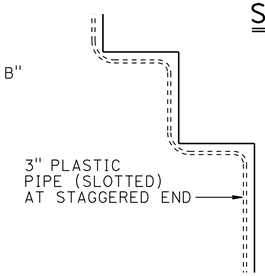

DETAIL B

No Scale

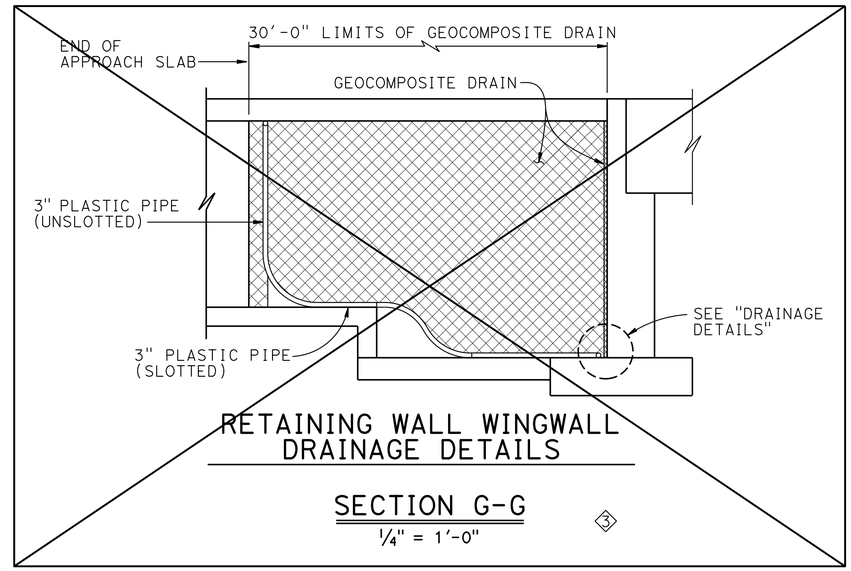

RETAINING WALL WINGWALL DRAINAGE DETAILS

SECTION G-G

1/4" = 1'-0"

3

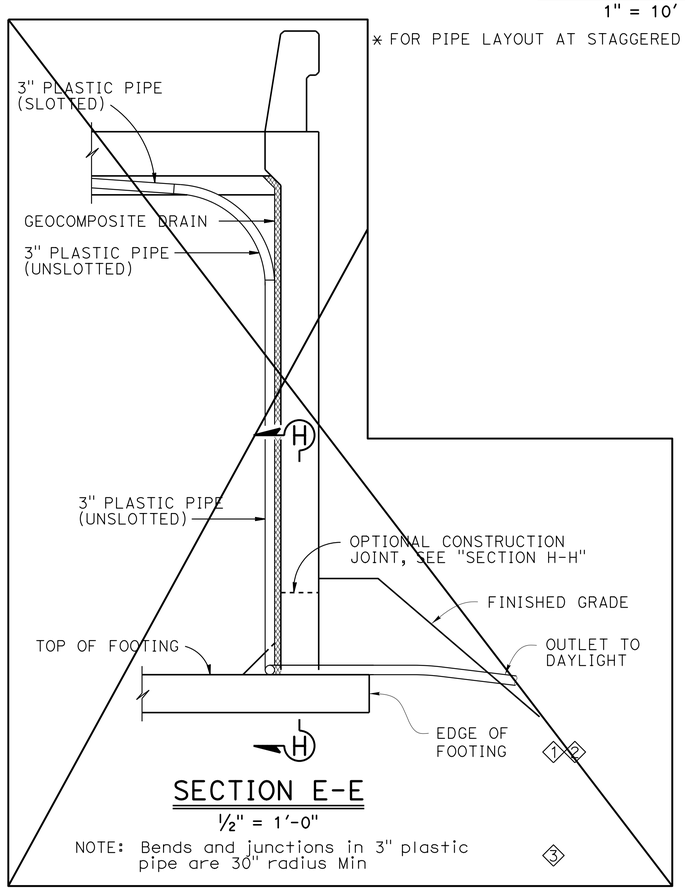

SECTION E-E

1/2" = 1'-0"

NOTE: Bends and junctions in 3" plastic pipe are 30" radius Min

3

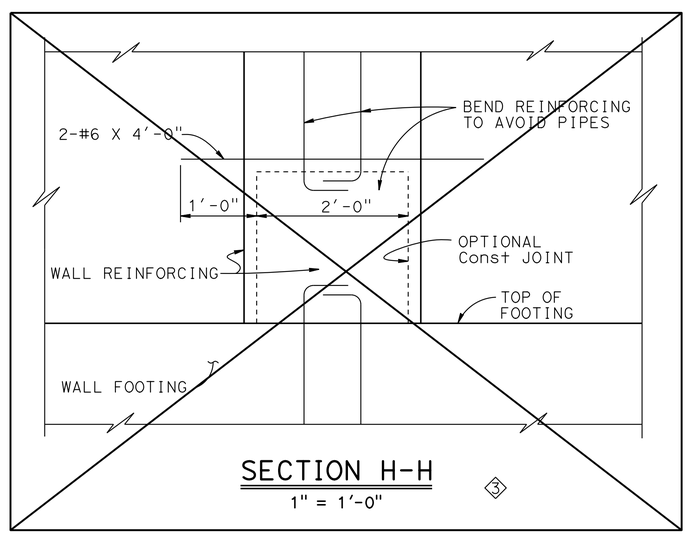

SECTION H-H

1" = 1'-0"

3

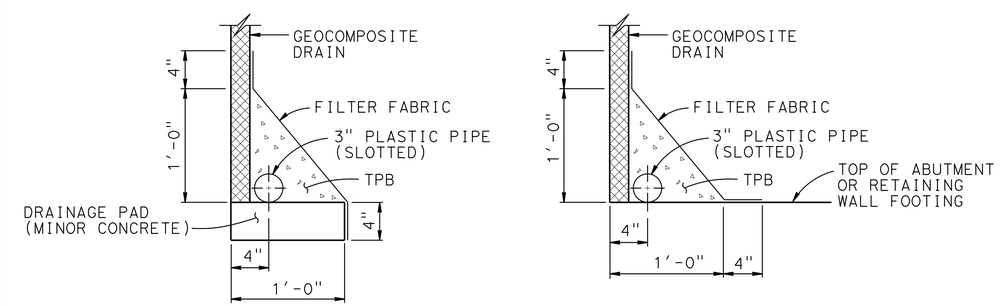

WITHOUT FOOTING — WITH FOOTING

DRAINAGE DETAILS

1 1/2" = 1'-0"

SPECIAL DETAILS

REVISED STANDARD DRAWING

FILE NO. xs3-110

APPROVAL DATE July 2011

1 Modified Detail
2 Changed Note
3 Crossed out Detail

STATE OF CALIFORNIA DEPARTMENT OF TRANSPORTATION

DIVISION OF ENGINEERING SERVICES

BRIDGE NO. 12-0027
POST MILE 40.65

ROCK CREEK BRIDGE WIDENING
STRUCTURE APPROACH DRAINAGE DETAILS

DS OSD 2147A (ENGLISH STANDARD DRAWING "XS" BORDER REV. (02-02-11)

ORIGINAL SCALE IN INCHES FOR REDUCED PLANS 0 1 2 3

UNIT: 3576
PROJECT NUMBER & PHASE: 03000011191
CONTRACT NO.: 03-1F4204

DISREGARD PRINTS BEARING EARLIER REVISION DATES

REVISION DATES 12/16/2013 08/28/2014

SHEET 12 OF 14

FILE => 12-0027-u-12str-appr-dd.dgn

USERNAME => s119538 DATE PLOTTED => 14-NOV-2014 TIME PLOTTED => 14:40

DIST	COUNTY	ROUTE	POST MILES TOTAL PROJECT	SHEET No.	TOTAL SHEETS
03	But	99	40.5/40.8	75	76

CERTIFIED ENGINEERING GEOLOGIST — DATE 3-12-14

PROFESSIONAL GEOLOGIST — Reid Buell — No. 1481 — Exp. 4-30-15 — CERTIFIED ENGINEERING GEOLOGIST — STATE OF CALIFORNIA

10-13-14
PLANS APPROVAL DATE

The State of California or its officers or agents shall not be responsible for the accuracy or completeness of electronic copies of this plan sheet.

This LOTB sheet was prepared in general with the Caltrans Soil & Rock Logging Classification Manual (Field Guide), dated August 1996.

BENCH MARK

BM CM 40.62 Elev 187.30′
Fnd ¾" rebar with 1½" Alum CT cap
23.83′ Rt ℄ Rte 99 Sta 68+85.90

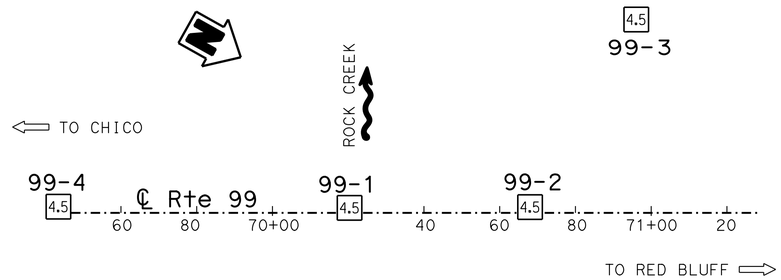

PLAN

1" = 20′

NOTES:

1. Unconfined compressive strength (PP) determined in field by pocket penetrometer.
2. Diedrich automatic SPT hammer system used in field investigation.
3. These log of test borings have been prepared using English units and supersede the previous log of test borings (revision date 10-31-00) for Rock Creek Bridge (Widen) prepared in metric units.

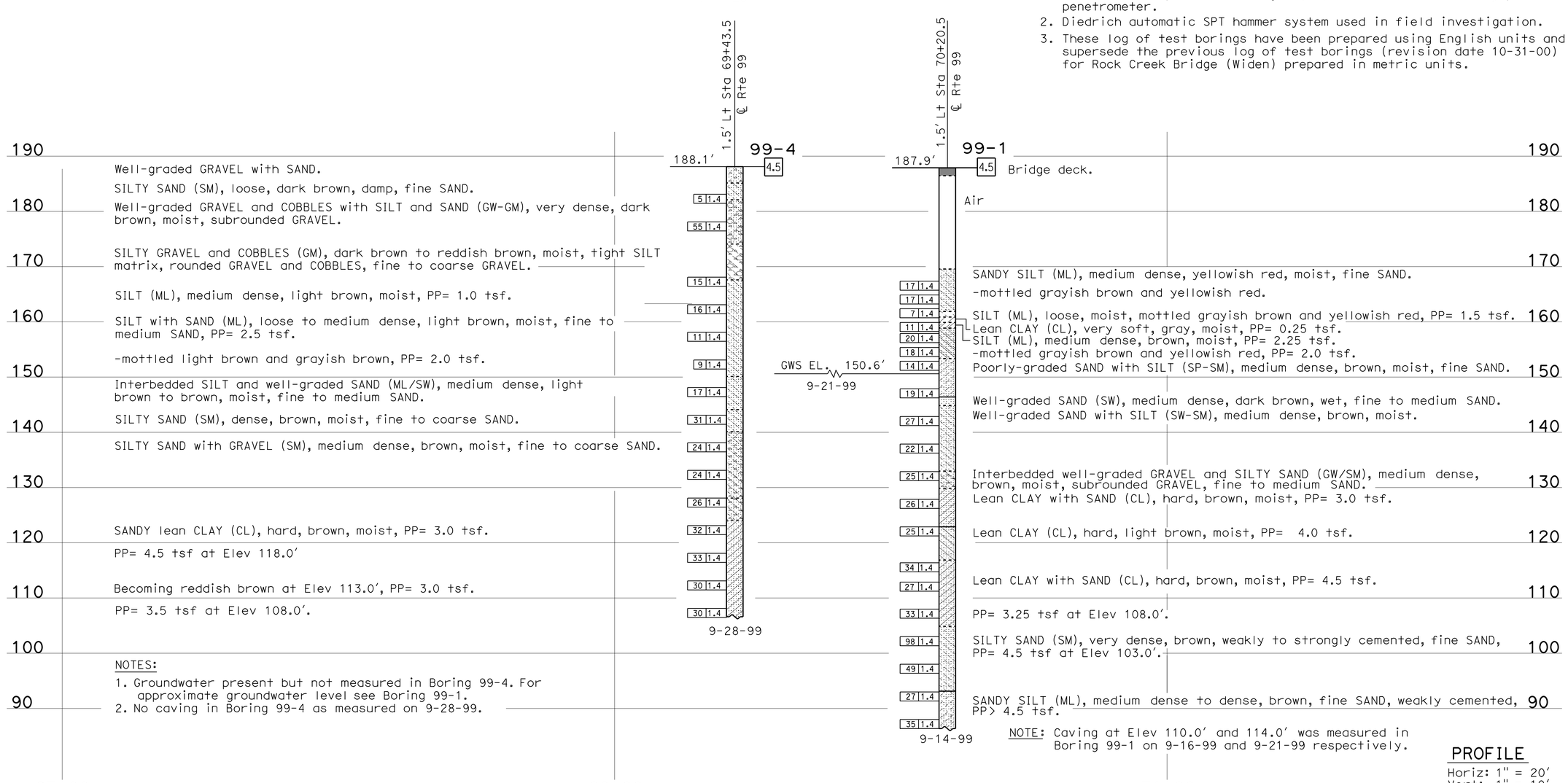

Well-graded GRAVEL with SAND.

SILTY SAND (SM), loose, dark brown, damp, fine SAND.

Well-graded GRAVEL and COBBLES with SILT and SAND (GW-GM), very dense, dark brown, moist, subrounded GRAVEL.

SILTY GRAVEL and COBBLES (GM), dark brown to reddish brown, moist, tight SILT matrix, rounded GRAVEL and COBBLES, fine to coarse GRAVEL.

SILT (ML), medium dense, light brown, moist, PP= 1.0 tsf.

SILT with SAND (ML), loose to medium dense, light brown, moist, fine to medium SAND, PP= 2.5 tsf.

-mottled light brown and grayish brown, PP= 2.0 tsf.

Interbedded SILT and well-graded SAND (ML/SW), medium dense, light brown to brown, moist, fine to medium SAND.

SILTY SAND (SM), dense, brown, moist, fine to coarse SAND.

SILTY SAND with GRAVEL (SM), medium dense, brown, moist, fine to coarse SAND.

SANDY lean CLAY (CL), hard, brown, moist, PP= 3.0 tsf.

PP= 4.5 tsf at Elev 118.0′

Becoming reddish brown at Elev 113.0′, PP= 3.0 tsf.

PP= 3.5 tsf at Elev 108.0′.

NOTES:

1. Groundwater present but not measured in Boring 99-4. For approximate groundwater level see Boring 99-1.
2. No caving in Boring 99-4 as measured on 9-28-99.

Bridge deck.

Air

SANDY SILT (ML), medium dense, yellowish red, moist, fine SAND.

-mottled grayish brown and yellowish red.

SILT (ML), loose, moist, mottled grayish brown and yellowish red, PP= 1.5 tsf.

Lean CLAY (CL), very soft, gray, moist, PP= 0.25 tsf.

SILT (ML), medium dense, brown, moist, PP= 2.25 tsf.

-mottled grayish brown and yellowish red, PP= 2.0 tsf.

Poorly-graded SAND with SILT (SP-SM), medium dense, brown, moist, fine SAND.

Well-graded SAND (SW), medium dense, dark brown, wet, fine to medium SAND.

Well-graded SAND with SILT (SW-SM), medium dense, brown, moist.

Interbedded well-graded GRAVEL and SILTY SAND (GW/SM), medium dense, brown, moist, subrounded GRAVEL, fine to medium SAND.

Lean CLAY with SAND (CL), hard, brown, moist, PP= 3.0 tsf.

Lean CLAY (CL), hard, light brown, moist, PP= 4.0 tsf.

Lean CLAY with SAND (CL), hard, brown, moist, PP= 4.5 tsf.

PP= 3.25 tsf at Elev 108.0′.

SILTY SAND (SM), very dense, brown, weakly to strongly cemented, fine SAND, PP= 4.5 tsf at Elev 103.0′.

SANDY SILT (ML), medium dense to dense, brown, fine SAND, weakly cemented, PP> 4.5 tsf.

NOTE: Caving at Elev 110.0′ and 114.0′ was measured in Boring 99-1 on 9-16-99 and 9-21-99 respectively.

PROFILE

Horiz: 1" = 20′
Vert: 1" = 10′

LEGEND OF BORING OPERATIONS

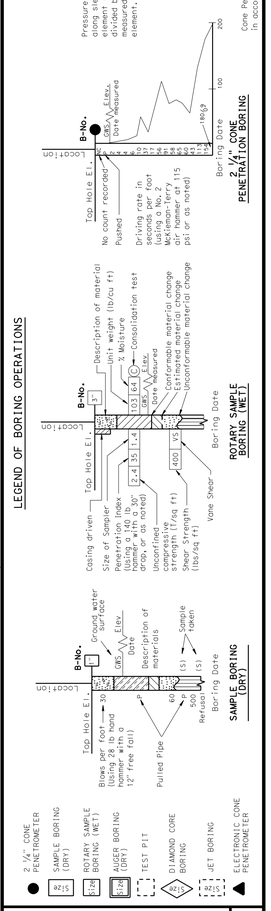

LEGEND OF EARTH MATERIALS

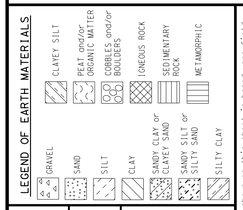

CONSISTENCY CLASSIFICATION FOR SOILS

According to the Standard Penetration Test

SPT N-Value (Blows/foot)	Granular	SPT N-Value (Blows/foot)	Cohesive
0-4	Very Loose	<2	Very Soft
5-10	Loose	2-4	Soft
11-30	Medium Dense	5-8	Medium stiff
31-50	Dense	9-15	Stiff
>50	Very Dense	16-30	Very Stiff
		31-60	Hard
		>60	Very Hard

NOTE: Classification of earth material as shown on this sheet is based upon field inspection and is not to be construed to imply mechanical analysis.

ENGINEERING SERVICES	MATERIALS & GEOTECHNICAL SVCS
DRAWN BY	F. Nguyen
CHECKED BY	T. Alderman

FIELD INVESTIGATION BY: T. Alderman

STATE OF CALIFORNIA
DEPARTMENT OF TRANSPORTATION

DIVISION OF ENGINEERING SERVICES
STRUCTURE DESIGN
DESIGN BRANCH 14

BRIDGE NO. 12-0027
POST MILE 40.65

ROCK CREEK BRIDGE (WIDEN)

LOG OF TEST BORINGS 1 OF 2

OGS LOG OF TEST BORINGS SHEET (ENGLISH) (REV. 5/25/07)

ORIGINAL SCALE IN INCHES FOR REDUCED PLANS 0 1 2 3

UNIT: 3643
PROJECT NUMBER & PHASE: 03000011191

CONTRACT NO.: 03-1F4204

DISREGARD PRINTS BEARING EARLIER REVISION DATES

REVISION DATES: 12-10-13 03-04-14 02-24-14

SHEET 13 OF 14

FILE => 12-0027-z-131otb.dgn

USERNAME => s113538 DATE PLOTTED => 14-NOV-2014 TIME PLOTTED => 14:40

DIST	COUNTY	ROUTE	POST MILES TOTAL PROJECT	SHEET No.	TOTAL SHEETS
03	But	99	40.5/40.8	76	76

CERTIFIED ENGINEERING GEOLOGIST — DATE 3-12-14

PROFESSIONAL GEOLOGIST — Reid Buell No. 1481 Exp. 4-30-15 CERTIFIED ENGINEERING GEOLOGIST — STATE OF CALIFORNIA

10-13-14
PLANS APPROVAL DATE

The State of California or its officers or agents shall not be responsible for the accuracy or completeness of electronic copies of this plan sheet.

This LOTB sheet was prepared in general with the Caltrans Soil & Rock Logging Classification Manual (Field Guide), dated August 1996.

FOR PLAN VIEW, SEE
"LOG OF TEST BORINGS 1 OF 2"

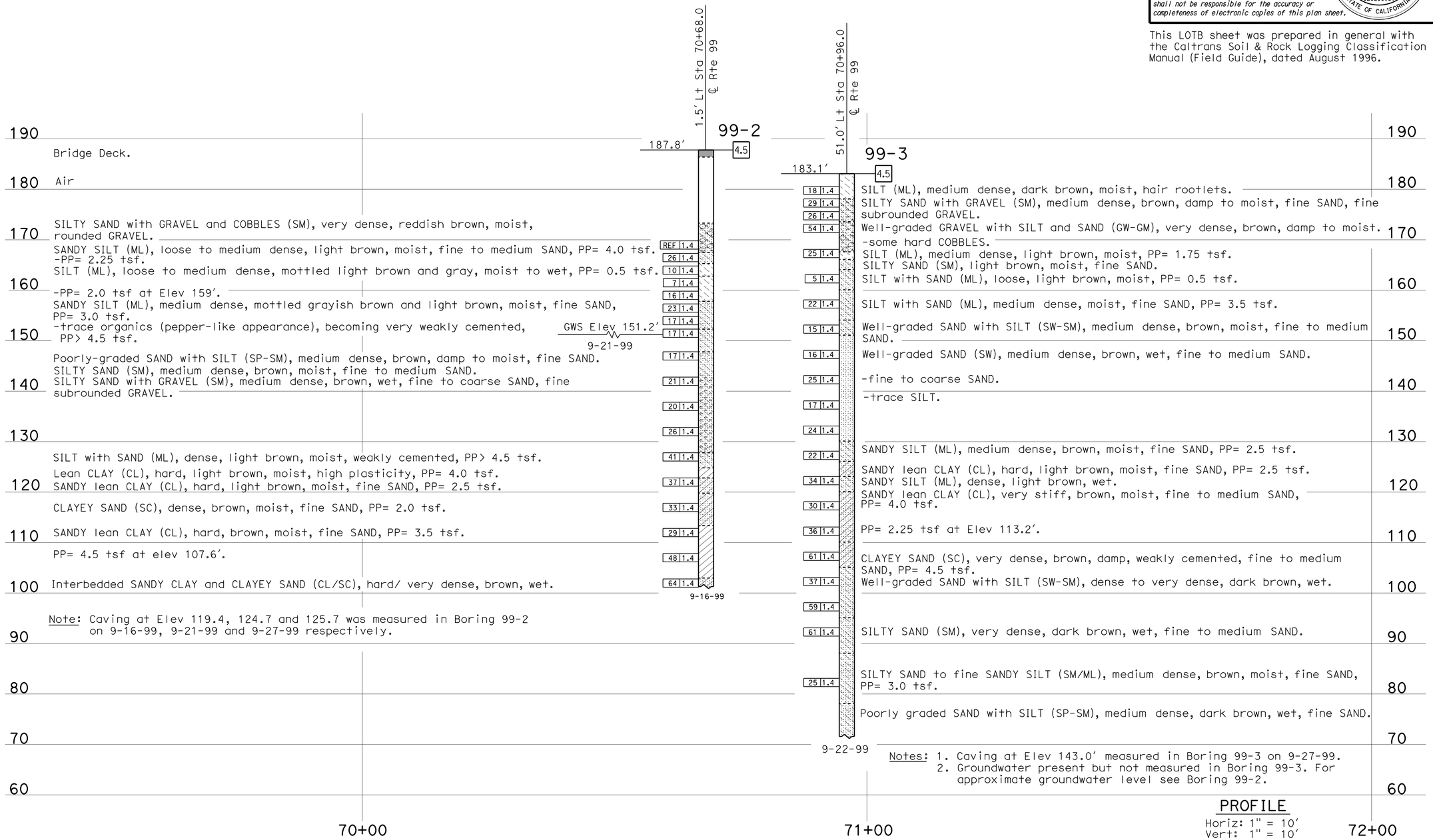

LEGEND OF BORING OPERATIONS

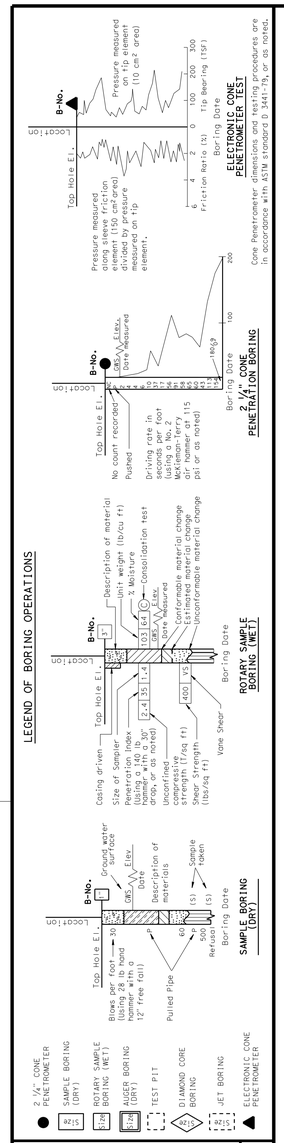

LEGEND OF EARTH MATERIALS

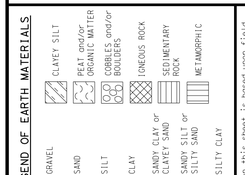

CONSISTENCY CLASSIFICATION FOR SOILS

According to the Standard Penetration Test

SPT N-Value (Blows/ foot)	Granular	SPT N-Value (Blows/ foot)	Cohesive
0-4	Very Loose	<2	Very Soft
5-10	Loose	2-4	Soft
11-30	Medium Dense	5-8	Medium stiff
31-50	Dense	9-15	Stiff
>50	Very Dense	16-30	Very Stiff
		31-60	Hard
		>60	Very Hard

NOTE: Classification of earth material as shown on this sheet is based upon field inspection and is not to be construed to imply mechanical analysis.

ENGINEERING SERVICES	MATERIALS & GEOTECHNICAL SVCS
DRAWN BY	F. Nguyen
CHECKED BY	T. Alderman

FIELD INVESTIGATION BY: T. Alderman

STATE OF CALIFORNIA DEPARTMENT OF TRANSPORTATION

DIVISION OF ENGINEERING SERVICES STRUCTURE DESIGN — DESIGN BRANCH 14

BRIDGE NO. 12-0027 — POST MILE 40.65

ROCK CREEK BRIDGE (WIDEN)

LOG OF TEST BORINGS 2 OF 2

OGS LOG OF TEST BORINGS SHEET (ENGLISH) (REV. 5/25/07)

ORIGINAL SCALE IN INCHES FOR REDUCED PLANS 0 1 2 3

UNIT: 3643
PROJECT NUMBER & PHASE: 03000011191

CONTRACT NO.: 03-1F4204

DISREGARD PRINTS BEARING EARLIER REVISION DATES → 12-10-13 03-04-14 02-24-14

SHEET 14 OF 14

FILE => 12-0027-z-14lotb.dgn

USERNAME => s119338 DATE PLOTTED => 14-NOV-2014 TIME PLOTTED => 14:40