Dist	COUNTY	ROUTE	KILOMETER POST TOTAL PROJECT	SHEET No.	TOTAL SHEETS
03	Nev	49	15.4/18.0	2	312

REGISTERED CIVIL ENGINEER 10-29-08 DATE

3-23-09
PLANS APPROVAL DATE

REGISTERED PROFESSIONAL ENGINEER ARSHAD IQBAL No. C62831 Exp. 6-30-10 CIVIL STATE OF CALIFORNIA

THE STATE OF CALIFORNIA OR ITS OFFICERS OR AGENTS SHALL NOT BE RESPONSIBLE FOR THE ACCURACY OR COMPLETENESS OF ELECTRONIC COPIES OF THIS PLAN SHEET.

Caltrans Metric

3 REVISED PER ADDENDUM No. 3 DATED APRIL 12, 2010

DESIGN DESIGNATION (ROUTE 49)

2009 ADT = 32,800 D= 54%
2019 ADT = 49,300 T= 3.6%
DHV = 3,740 V= 55 MPH

NOTES:

1. DIMENSIONS OF STRUCTURAL SECTIONS ARE SUBJECT TO TOLERANCES SPECIFIED IN THE STANDARD SPECIFICATIONS.
2. SUPERELEVATIONS AS SHOWN OR AS DIRECTED BY THE ENGINEER.
3. SEE LAYOUT PLANS FOR HMA DIKE AND MBGR LOCATIONS.
4. FOR LOCATIONS OF OBLITERATE SURFACING AND REPLACE AC SURFACING, SEE LAYOUT SHEETS.
5. PROFILE GRADE ELEVATION AT TOP OF HMA-A.
6. PAVE RHMA-O TO EDGE OF PAVEMENT THROUGH HIGH SIDE OF SUPER.
7. FOR LIMITS OF RHMA-O ON SHOULDER, SEE DETAIL THIS SHEET.
8. FOR RUMBLE STRIP LOCATIONS SEE LAYOUT SHEETS AND STANDARD PLAN A40B.
9. ALL EXISTING OGAC SHALL BE REMOVED PRIOR TO OVERLAY.
10. 3 FOR IMPORTED MATERIAL (SHOULDER BACKING) ~~LOCATIONS AND DETAILS,~~ DETAIL, SEE CONSTRUCTION DETAILS SHEET.

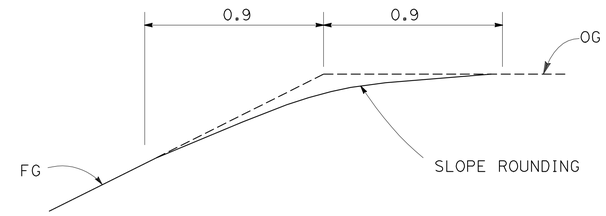

TYPICAL SLOPE ROUNDING "B" LINE - "C" LINE - "D" LINE (COUNTY ROADS)

LEGEND:

HMA-A - HOT MIX ASPHALT-TYPE A
RHMA-O - RUBBERIZED HOT MIX ASPHALT-(OPEN GRADED)
SUPER - SUPERELEVATION
GPI - GEOSYNTHETIC PAVEMENT INTERLAYER
SCL - SAWCUT LINE
IM - IMPORTED MATERIAL (SHOULDER BACKING)

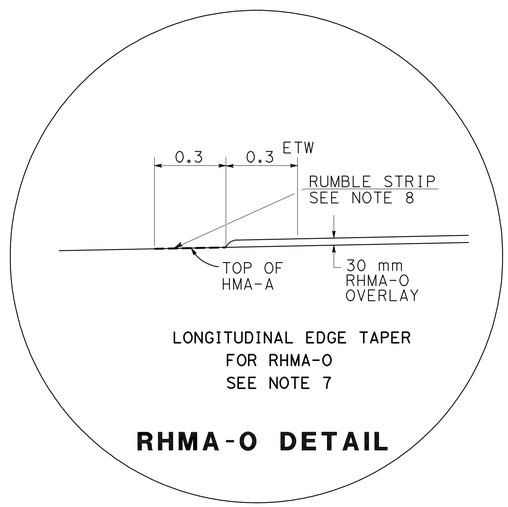

RHMA-O DETAIL

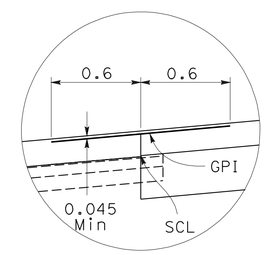

GEOSYNTHETIC PAVEMENT INTERLAYER DETAIL

1 — Exist
25 mm OGAC
136 mm AC
76-152 mm AB

2 — Exist
25 mm OGAC
136 mm AC
76 mm AB

3 — Exist
25 mm OGAC
255 mm AC
555 mm AB

4 — Exist
25 mm OGAC
342 mm AC
335 mm AB

5 — Exist
25 mm OGAC
342 mm AC
100 mm CRUSH RUN BASE

* 6 — 30 mm RHMA-O
170 mm HMA-A
395 mm CI 2 AB

* (FOR SHOULDER, SEE NOTE 7 THIS SHEET)

7 — 30 mm RHMA-O
Var 45 -480 mm HMA-A
Var 25 - 80 mm COLD PLANE AC PAVEMENT

8 — 30 mm RHMA- O
Var 45 -470 mm HMA-A
25 mm COLD PLANE AC PAVEMENT

9 — 100 mm HMA-A
150 mm CI 2 AB

10 — Var 45-300 mm HMA-A
Var 25 mm COLD PLANE AC PAVEMENT

11 — 250 mm CI 2 AB

12 — 75 mm HMA-A
100 mm CI 2 AB

13 — 175 mm CI 2 AB

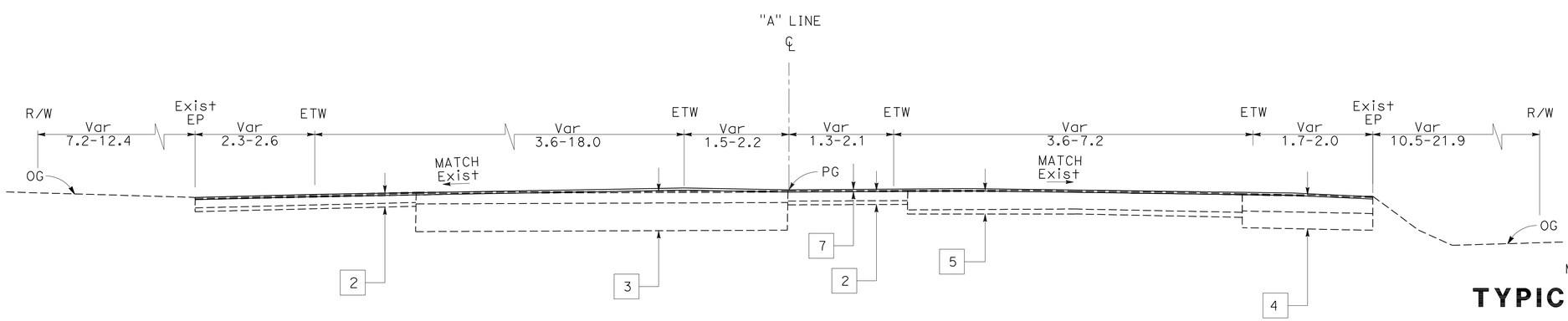

ALL DIMENSIONS ARE IN METERS UNLESS OTHERWISE SHOWN

TYPICAL CROSS SECTIONS

NO SCALE

X-1

"A" 222+00.000 TO 225+41.300

ROUTE 49

STATE OF CALIFORNIA - DEPARTMENT OF TRANSPORTATION
SOUTH REGION
OFFICE OF DESIGN,SOUTH
DESIGN BRANCH S16

Caltrans

FUNCTIONAL SUPERVISOR: M. ALVANDI
CALCULATED-DESIGNED BY: N. SELWAL
CHECKED BY: A. IQBAL
REVISED BY
DATE REVISED

LAST REVISION DATE PLOTTED => 08-APR-2010
TIME PLOTTED => 10:23

3 REVISED PER ADDENDUM No. 3 DATED APRIL 12, 2010

Dist	COUNTY	ROUTE	KILOMETER POST TOTAL PROJECT	SHEET No.	TOTAL SHEETS
03	Nev	49	15.4/18.0	3	312

REGISTERED CIVIL ENGINEER 10-29-08 DATE

3-23-09
PLANS APPROVAL DATE

REGISTERED PROFESSIONAL ENGINEER ARSHAD IQBAL No. C62831 Exp. 6-30-10 CIVIL STATE OF CALIFORNIA

THE STATE OF CALIFORNIA OR ITS OFFICERS OR AGENTS SHALL NOT BE RESPONSIBLE FOR THE ACCURACY OR COMPLETENESS OF ELECTRONIC COPIES OF THIS PLAN SHEET.

Caltrans Metric

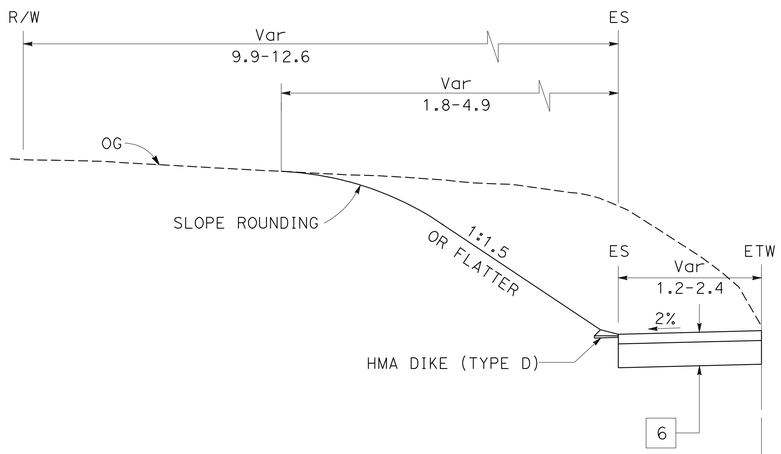

"A" 225+45.280 TO 227+20.000

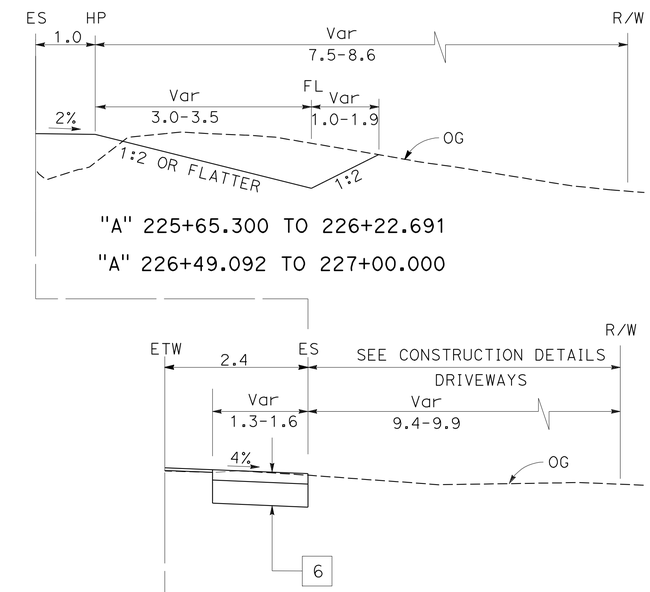

"A" 225+65.300 TO 226+22.691
"A" 226+49.092 TO 227+00.000

"A" 225+45.300 TO 225+65.300
"A" 226+22.691 to 226+49.092

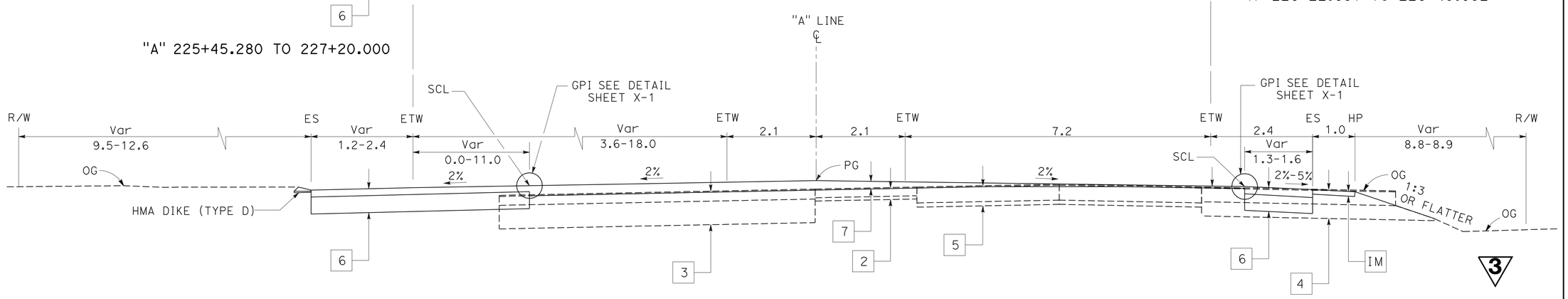

"A" 225+41.300 TO 227+20.000

ALL DIMENSIONS ARE IN METERS UNLESS OTHERWISE SHOWN

TYPICAL CROSS SECTIONS

NO SCALE

ROUTE 49

X-2

STATE OF CALIFORNIA - DEPARTMENT OF TRANSPORTATION
SOUTH REGION
OFFICE OF DESIGN, SOUTH
DESIGN BRANCH S16

FUNCTIONAL SUPERVISOR: M. ALVANDI
CALCULATED-DESIGNED BY: A. IQBAL
CHECKED BY: N. SELWAL
REVISED BY
DATE REVISED

LAST REVISION
DATE PLOTTED => 08-APR-2010
TIME PLOTTED => 10:23

Dist	COUNTY	ROUTE	KILOMETER POST TOTAL PROJECT	SHEET No.	TOTAL SHEETS
03	Nev	49	15.4/18.0	4	312

REGISTERED CIVIL ENGINEER 10-29-08 DATE

3-23-09
PLANS APPROVAL DATE

REGISTERED PROFESSIONAL ENGINEER ARSHAD IQBAL No. C62831 Exp. 6-30-10 CIVIL STATE OF CALIFORNIA

THE STATE OF CALIFORNIA OR ITS OFFICERS OR AGENTS SHALL NOT BE RESPONSIBLE FOR THE ACCURACY OR COMPLETENESS OF ELECTRONIC COPIES OF THIS PLAN SHEET.

Caltrans Metric

NOTE:

DEER UNDERCROSSING SEE CONSTRUCTION DETAILS SHEET
"A" 228+18.000 TO 228+22.000

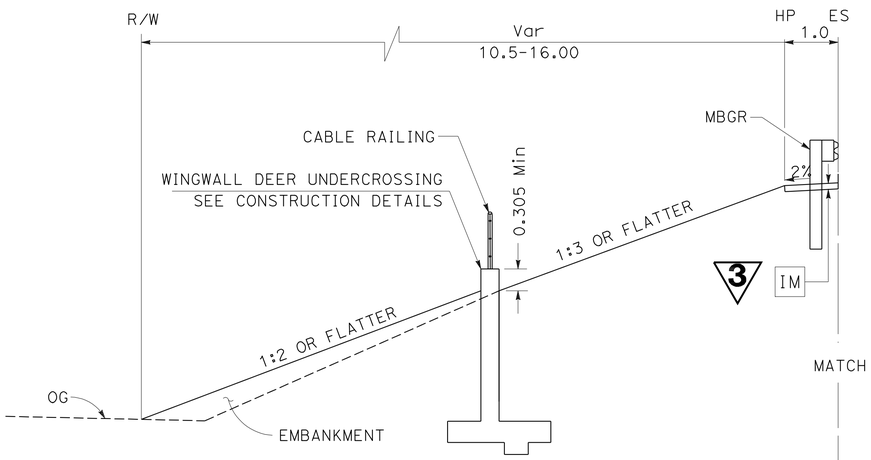

"A" 228+14.000 TO 228+18.000
"A" 228+22.000 TO 228+28.000

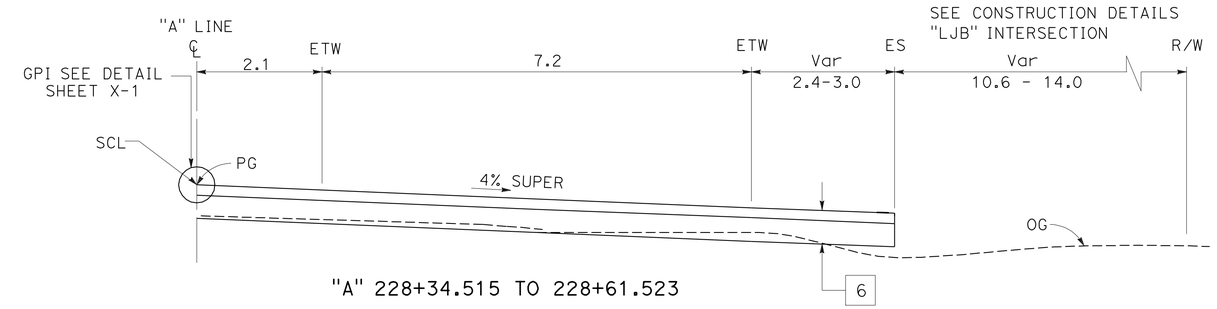

"A" 228+34.515 TO 228+61.523

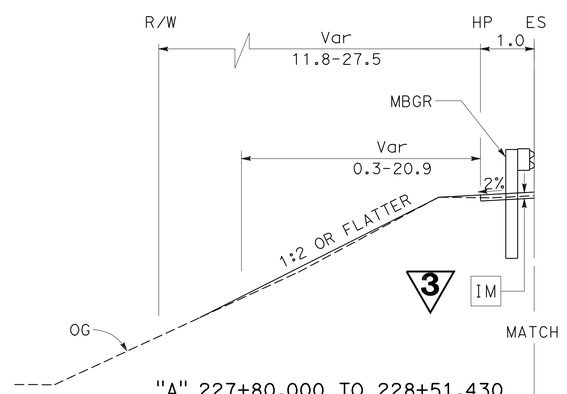

"A" 227+80.000 TO 228+51.430

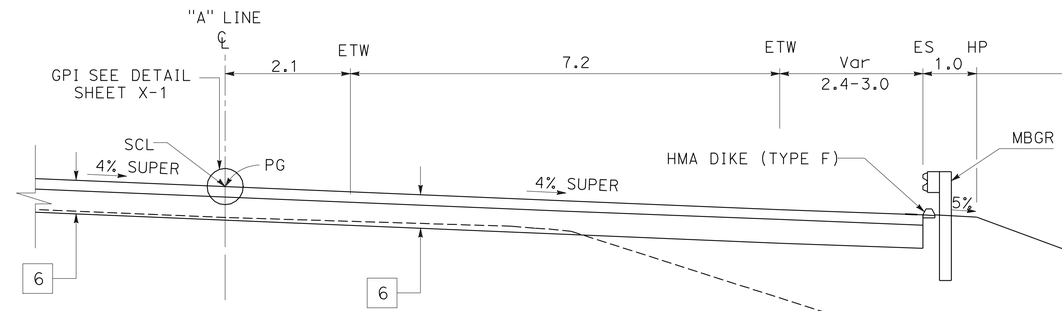

"A" 228+14.000 TO 228+18.000
"A" 228+22.000 TO 228+28.000

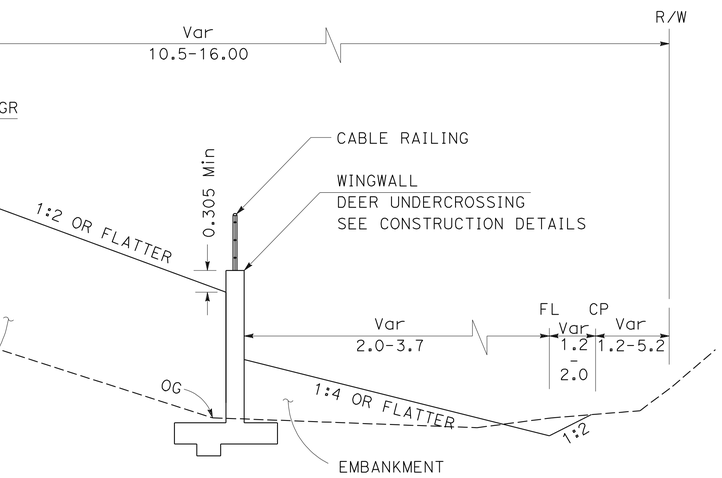

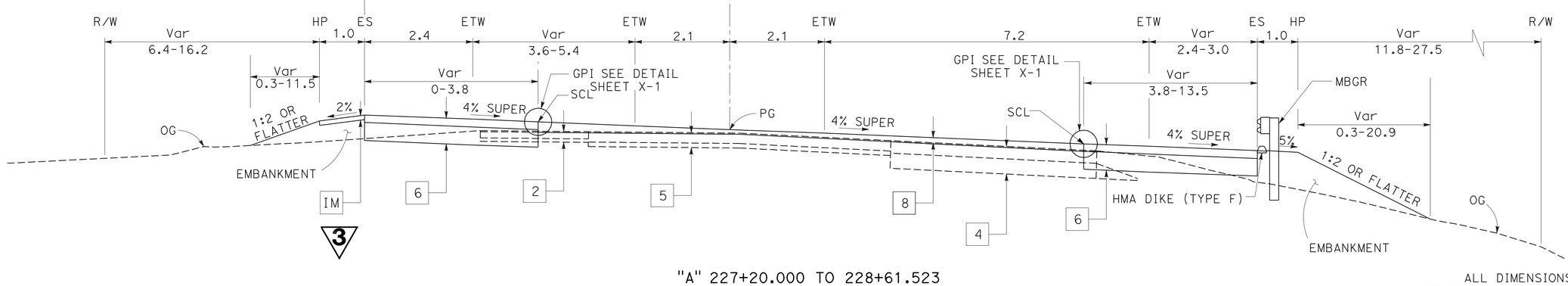

"A" 227+20.000 TO 228+61.523

ALL DIMENSIONS ARE IN METERS UNLESS OTHERWISE SHOWN

3 **REVISED PER ADDENDUM No. 3 DATED APRIL 12, 2010**

ROUTE 49

TYPICAL CROSS SECTIONS

NO SCALE

X-3

STATE OF CALIFORNIA - DEPARTMENT OF TRANSPORTATION
SOUTH REGION
OFFICE OF DESIGN SOUTH
DESIGN BRANCH S16

Caltrans

FUNCTIONAL SUPERVISOR: M. ALVANDI
CALCULATED-DESIGNED BY: N. SELWAL
CHECKED BY: A. IQBAL
REVISED BY
DATE REVISED

LAST REVISION DATE PLOTTED => 08-APR-2010
TIME PLOTTED => 10:24

Dist	COUNTY	ROUTE	KILOMETER POST TOTAL PROJECT	SHEET No.	TOTAL SHEETS
03	Nev	49	15.4/18.0	5	312

REGISTERED CIVIL ENGINEER 10-29-08 DATE

3-23-09
PLANS APPROVAL DATE

REGISTERED PROFESSIONAL ENGINEER ARSHAD IQBAL No. C62831 Exp. 6-30-10 CIVIL STATE OF CALIFORNIA

THE STATE OF CALIFORNIA OR ITS OFFICERS OR AGENTS SHALL NOT BE RESPONSIBLE FOR THE ACCURACY OR COMPLETENESS OF ELECTRONIC COPIES OF THIS PLAN SHEET.

Caltrans Metric

NOTE:
MAINTENANCE VEHICLE PULLOUT
R+ "A" 231+62.65 TO "A" 231+88.65

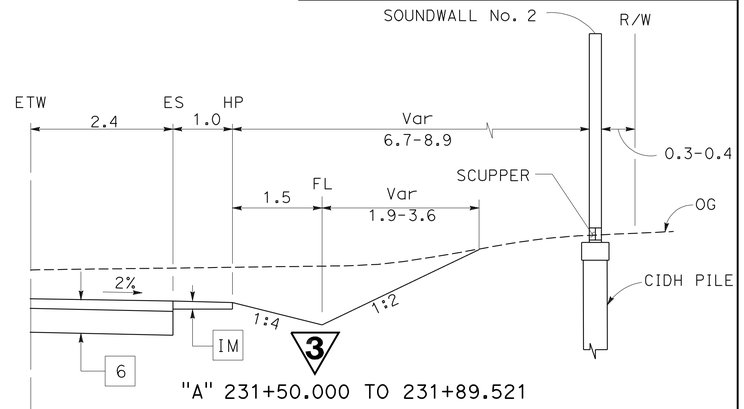

"A" 231+50.000 TO 231+89.521

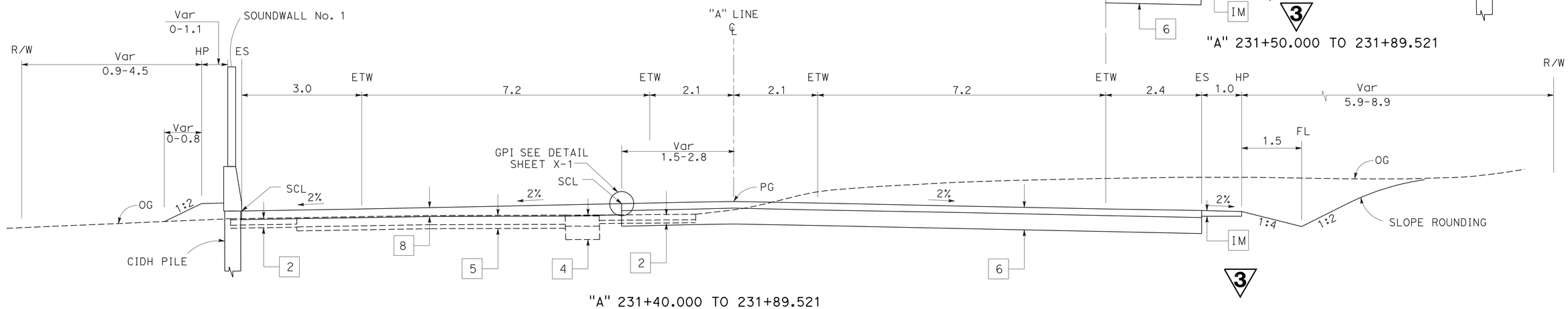

"A" 231+40.000 TO 231+89.521

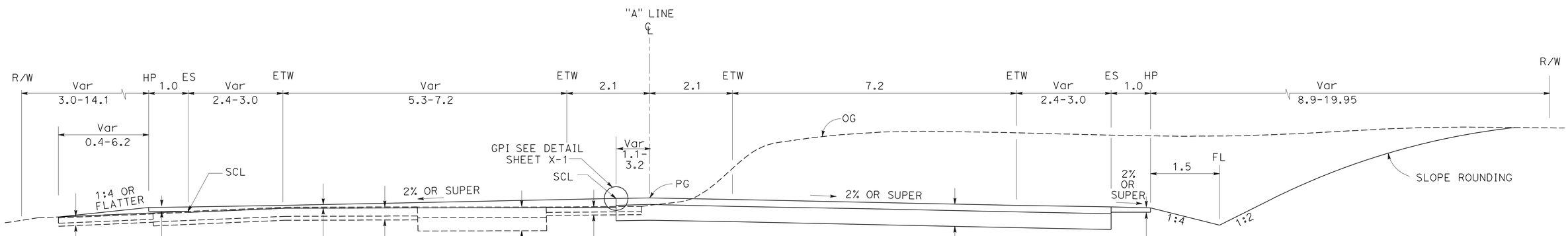

"A" 228+61.523 TO 231+40.000

ALL DIMENSIONS ARE IN METERS UNLESS OTHERWISE SHOWN

TYPICAL CROSS SECTIONS

NO SCALE

X-4

3 REVISED PER ADDENDUM No. 3 DATED APRIL 12, 2010

ROUTE 49

STATE OF CALIFORNIA - DEPARTMENT OF TRANSPORTATION
SOUTH REGION
OFFICE OF DESIGN SOUTH
DESIGN BRANCH S16

Caltrans

FUNCTIONAL SUPERVISOR: M. ALVANDI

CALCULATED-DESIGNED BY: N. SELWAL

CHECKED BY: A. IQBAL

REVISED BY

DATE REVISED

LAST REVISION DATE PLOTTED => 08-APR-2010
TIME PLOTTED => 10:24

Dist	COUNTY	ROUTE	KILOMETER POST TOTAL PROJECT	SHEET No.	TOTAL SHEETS
03	Nev	49	15.4/18.0	6	312

REGISTERED CIVIL ENGINEER 10-29-08 DATE

3-23-09
PLANS APPROVAL DATE

REGISTERED PROFESSIONAL ENGINEER ARSHAD IQBAL No. C62831 Exp. 6-30-10 CIVIL STATE OF CALIFORNIA

THE STATE OF CALIFORNIA OR ITS OFFICERS OR AGENTS SHALL NOT BE RESPONSIBLE FOR THE ACCURACY OR COMPLETENESS OF ELECTRONIC COPIES OF THIS PLAN SHEET.

Caltrans Metric

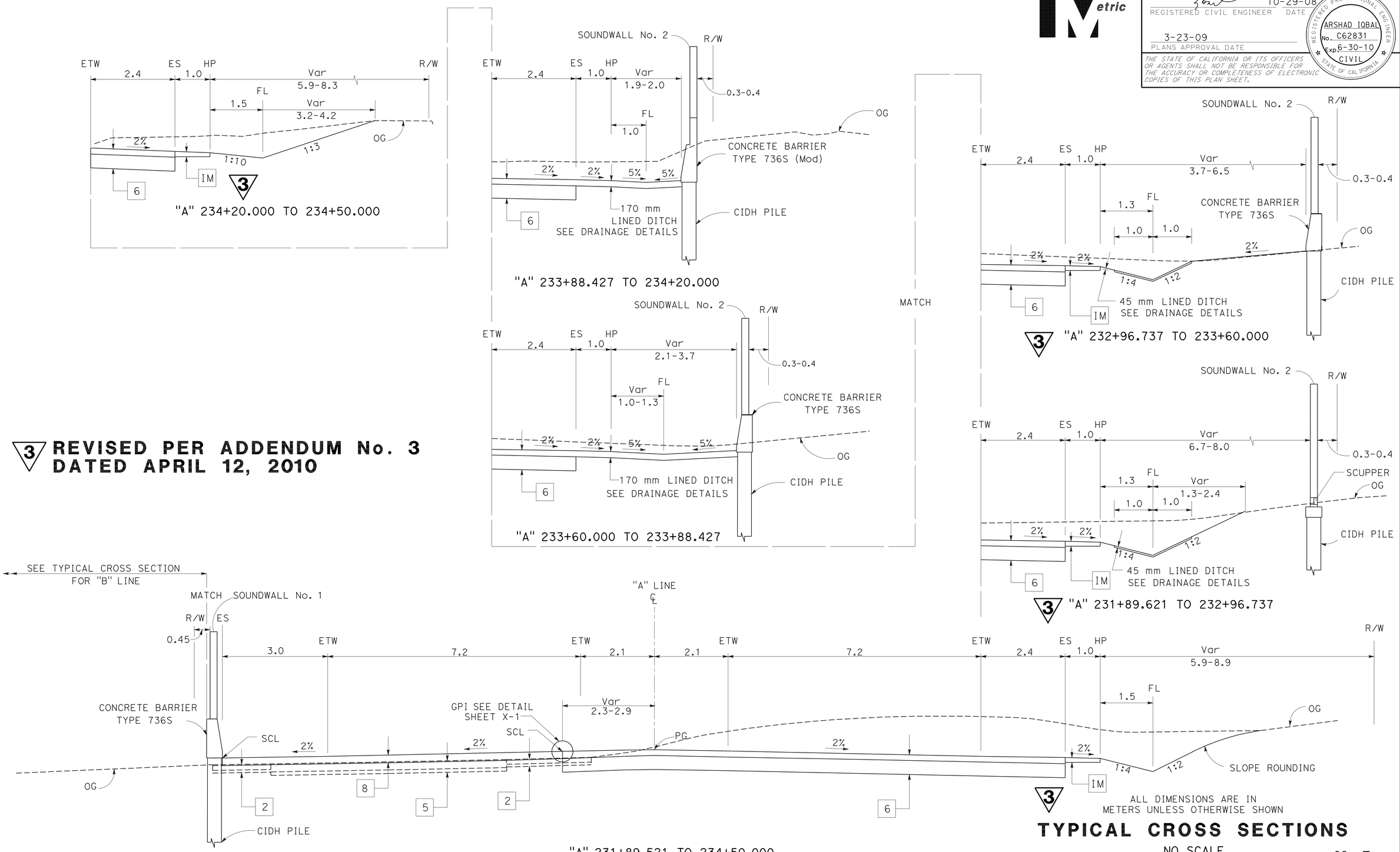

3 REVISED PER ADDENDUM No. 3
DATED APRIL 12, 2010

TYPICAL CROSS SECTIONS

NO SCALE

X-5

REVISED BY	DATE REVISED

CALCULATED-DESIGNED BY	CHECKED BY
N. SELWAL	A. IQBAL

FUNCTIONAL SUPERVISOR: M. ALVANDI

STATE OF CALIFORNIA - DEPARTMENT OF TRANSPORTATION
SOUTH REGION
OFFICE OF DESIGN, SOUTH
DESIGN BRANCH S16

Caltrans

DATE PLOTTED => 08-APR-2010
TIME PLOTTED => 10:24

LAST REVISION

Dist	COUNTY	ROUTE	KILOMETER POST TOTAL PROJECT	SHEET No.	TOTAL SHEETS
03	Nev	49	15.4/18.0	7	312

REGISTERED CIVIL ENGINEER 10-29-08 DATE

3-23-09
PLANS APPROVAL DATE

REGISTERED PROFESSIONAL ENGINEER ARSHAD IQBAL No. C62831 Exp. 6-30-10 CIVIL STATE OF CALIFORNIA

THE STATE OF CALIFORNIA OR ITS OFFICERS OR AGENTS SHALL NOT BE RESPONSIBLE FOR THE ACCURACY OR COMPLETENESS OF ELECTRONIC COPIES OF THIS PLAN SHEET.

Caltrans Metric

NOTE:
MAINTENANCE VEHICLE PULLOUT
Lt "A" 236+72.00 TO "A" 236+97.33

3 REVISED PER ADDENDUM No. 3 DATED APRIL 12, 2010

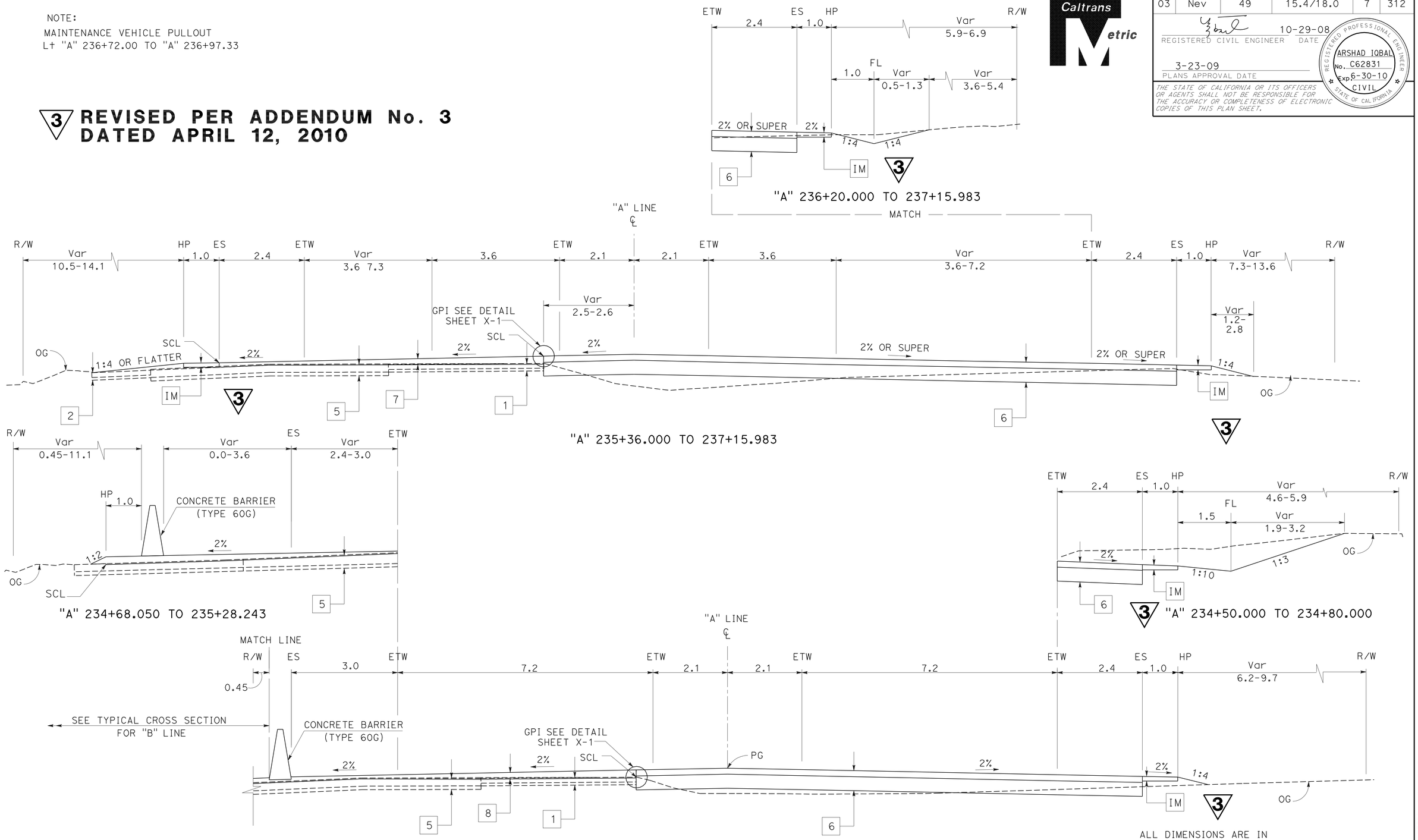

ALL DIMENSIONS ARE IN METERS UNLESS OTHERWISE SHOWN

ROUTE 49

TYPICAL CROSS SECTIONS

NO SCALE

X-6

STATE OF CALIFORNIA - DEPARTMENT OF TRANSPORTATION
SOUTH REGION
OFFICE OF DESIGN SOUTH
DESIGN BRANCH S16

Caltrans

FUNCTIONAL SUPERVISOR M. ALVANDI
CALCULATED-DESIGNED BY A. IQBAL
CHECKED BY N. SELWAL
REVISED BY
DATE REVISED

LAST REVISION DATE PLOTTED => 08-APR-2010
TIME PLOTTED => 10:24

Dist	COUNTY	ROUTE	KILOMETER POST TOTAL PROJECT	SHEET No.	TOTAL SHEETS
03	Nev	49	15.4/18.0	8	312

REGISTERED CIVIL ENGINEER 10-29-08 DATE

3-23-09
PLANS APPROVAL DATE

REGISTERED PROFESSIONAL ENGINEER ARSHAD IQBAL No. C62831 Exp. 6-30-10 CIVIL STATE OF CALIFORNIA

THE STATE OF CALIFORNIA OR ITS OFFICERS OR AGENTS SHALL NOT BE RESPONSIBLE FOR THE ACCURACY OR COMPLETENESS OF ELECTRONIC COPIES OF THIS PLAN SHEET.

Caltrans Metric

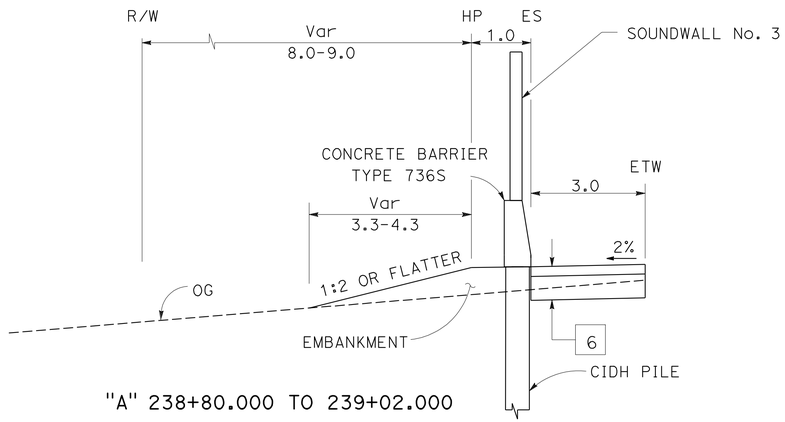

"A" 238+80.000 TO 239+02.000

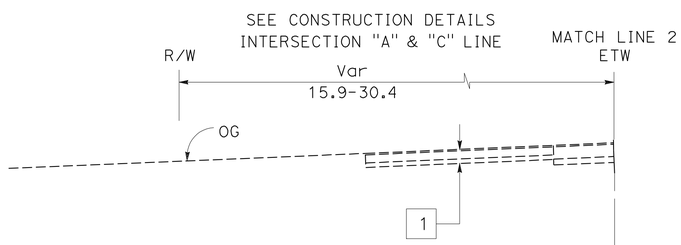

"A" 237+14.023 TO 237+71.992

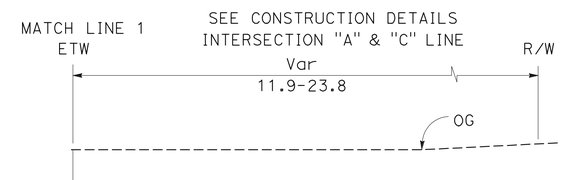

"A" 237+14.369 TO 237+70.658

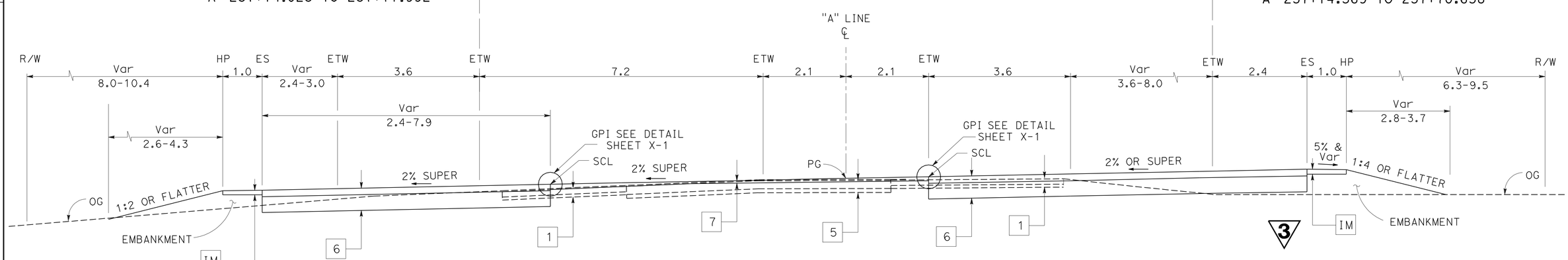

"A" 237+15.983 TO 239+02.000

ALL DIMENSIONS ARE IN METERS UNLESS OTHERWISE SHOWN

TYPICAL CROSS SECTIONS

NO SCALE

X-7

3 **REVISED PER ADDENDUM No. 3 DATED APRIL 12, 2010**

ROUTE 49

REVISED BY	DATE REVISED

CALCULATED-DESIGNED BY: N. SELWAL
CHECKED BY: A. IQBAL
FUNCTIONAL SUPERVISOR: M. ALVANDI

STATE OF CALIFORNIA - DEPARTMENT OF TRANSPORTATION
SOUTH REGION
OFFICE OF DESIGN, SOUTH
DESIGN BRANCH S16
Caltrans

LAST REVISION DATE PLOTTED => 08-APR-2010
TIME PLOTTED => 10:24

Dist	COUNTY	ROUTE	KILOMETER POST TOTAL PROJECT	SHEET No.	TOTAL SHEETS
03	Nev	49	15.4/18.0	9	312

REGISTERED CIVIL ENGINEER 10-29-08 DATE

3-23-09
PLANS APPROVAL DATE

REGISTERED PROFESSIONAL ENGINEER ARSHAD IQBAL No. C62831 Exp. 6-30-10 CIVIL STATE OF CALIFORNIA

THE STATE OF CALIFORNIA OR ITS OFFICERS OR AGENTS SHALL NOT BE RESPONSIBLE FOR THE ACCURACY OR COMPLETENESS OF ELECTRONIC COPIES OF THIS PLAN SHEET.

Caltrans Metric

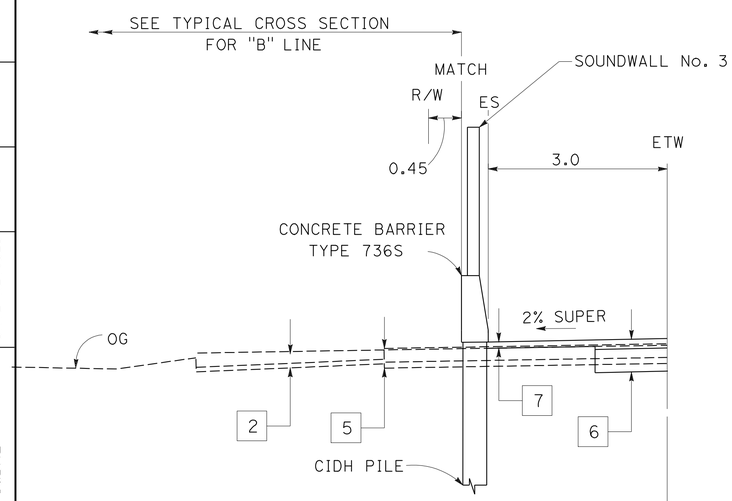

"A" 239+60.000 TO 241+65.000

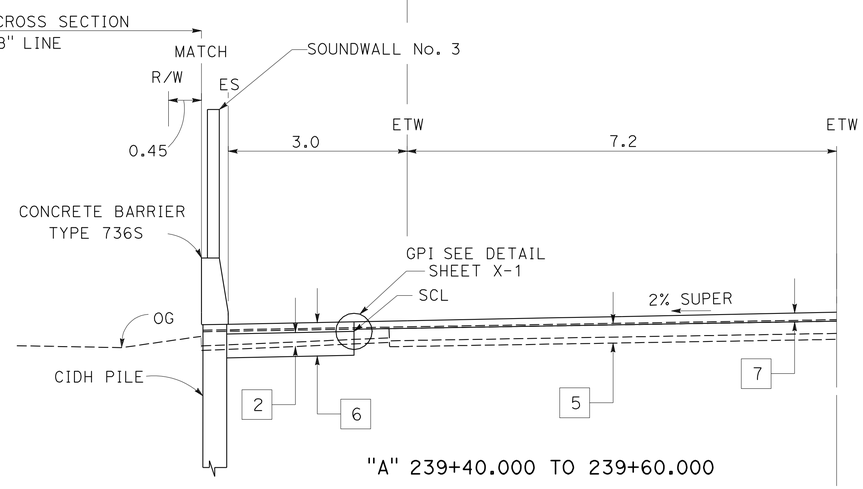

"A" 239+40.000 TO 239+60.000

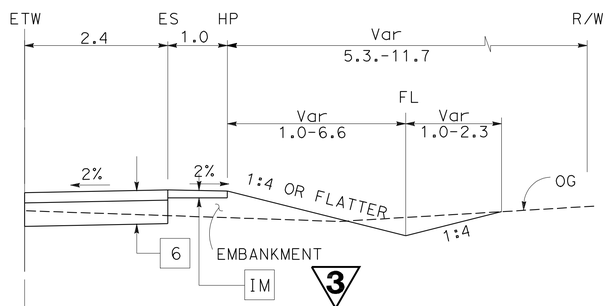

"A" 239+40.000 TO 241+65.000

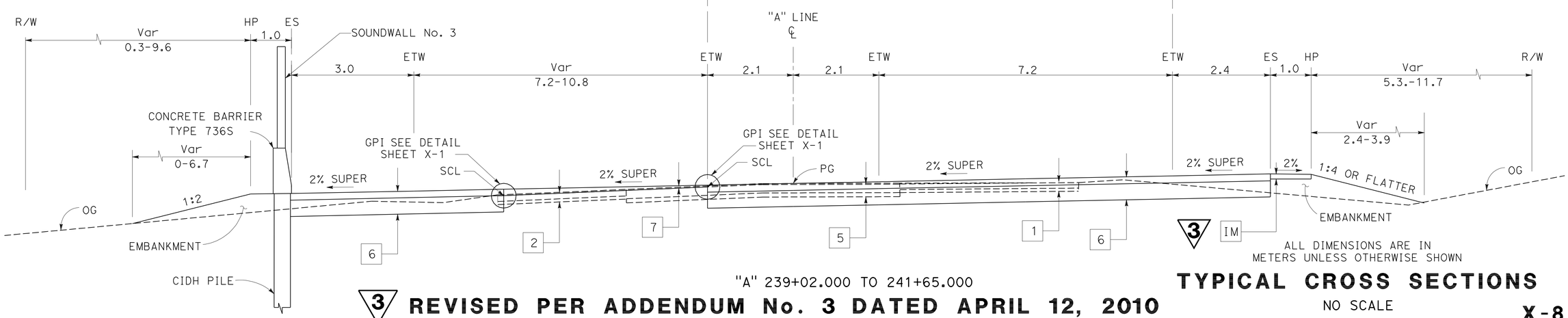

ALL DIMENSIONS ARE IN METERS UNLESS OTHERWISE SHOWN

"A" 239+02.000 TO 241+65.000

3 **REVISED PER ADDENDUM No. 3 DATED APRIL 12, 2010**

ROUTE 49

TYPICAL CROSS SECTIONS

NO SCALE

X-8

REVISED BY	DATE REVISED

CALCULATED-DESIGNED BY	N. SELWAL
CHECKED BY	A. IQBAL
FUNCTIONAL SUPERVISOR	M. ALVANDI

STATE OF CALIFORNIA - DEPARTMENT OF TRANSPORTATION
SOUTH REGION
OFFICE OF DESIGN, SOUTH
DESIGN BRANCH S16

Caltrans

LAST REVISION | DATE PLOTTED => 08-APR-2010 | TIME PLOTTED => 10:24

Dist	COUNTY	ROUTE	KILOMETER POST TOTAL PROJECT	SHEET No.	TOTAL SHEETS
03	Nev	49	15.4/18.0	10	312

REGISTERED CIVIL ENGINEER 10-29-08 DATE

3-23-09
PLANS APPROVAL DATE

REGISTERED PROFESSIONAL ENGINEER ARSHAD IQBAL No. C62831 Exp. 6-30-10 CIVIL STATE OF CALIFORNIA

THE STATE OF CALIFORNIA OR ITS OFFICERS OR AGENTS SHALL NOT BE RESPONSIBLE FOR THE ACCURACY OR COMPLETENESS OF ELECTRONIC COPIES OF THIS PLAN SHEET.

Caltrans Metric

3 REVISED PER ADDENDUM No. 3 DATED APRIL 12, 2010

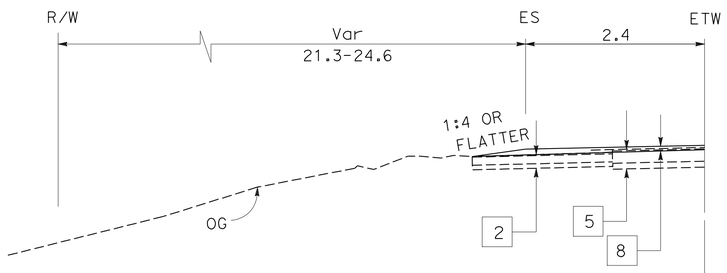

"A" 244+10.790 TO 244+37.874

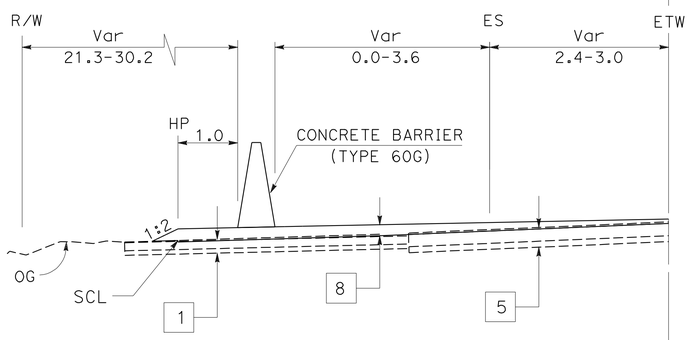

"A" 243+23.380 TO 244+10.790

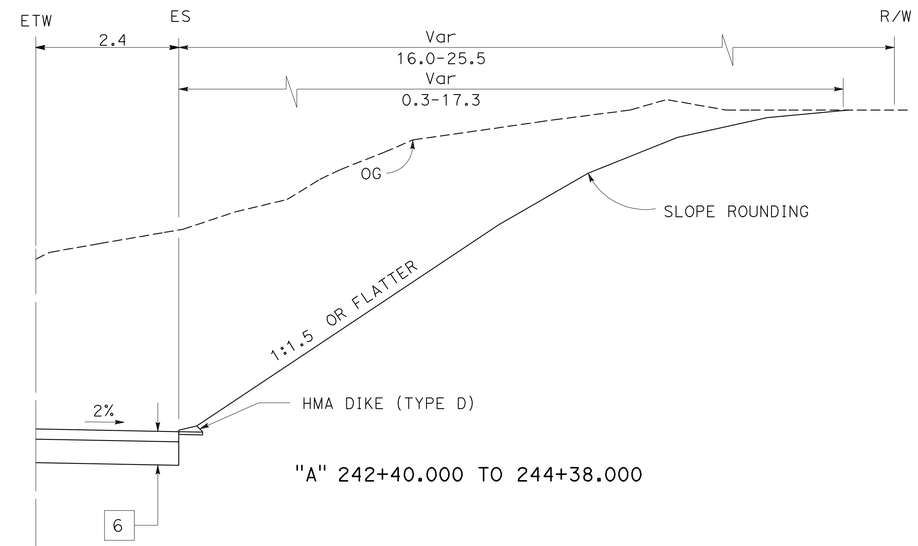

"A" 242+40.000 TO 244+38.000

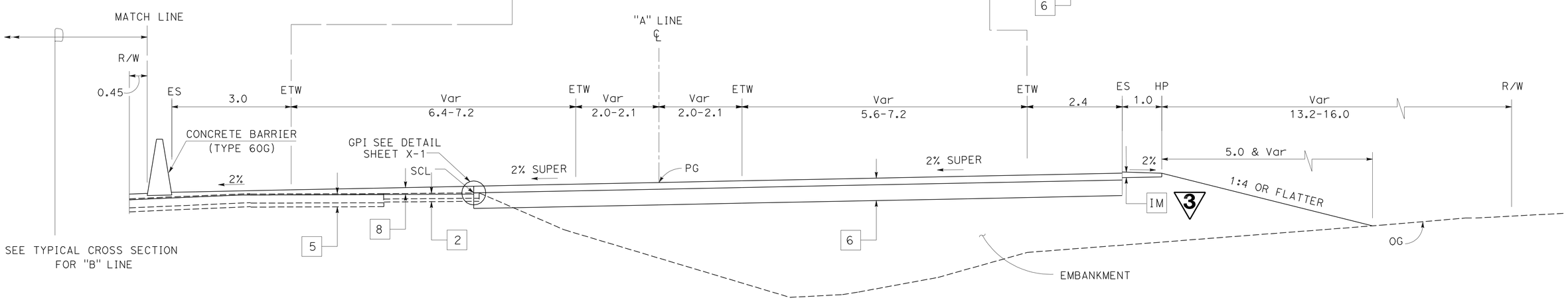

"A" 241+65.000 TO 244+38.000

ALL DIMENSIONS ARE IN
METERS UNLESS OTHERWISE SHOWN

TYPICAL CROSS SECTIONS

NO SCALE

X-9

ROUTE 49

STATE OF CALIFORNIA - DEPARTMENT OF TRANSPORTATION
SOUTH REGION
OFFICE OF DESIGN SOUTH
DESIGN BRANCH S16

Caltrans

FUNCTIONAL SUPERVISOR M. ALVANDI
CALCULATED-DESIGNED BY A. IQBAL
CHECKED BY
REVISED BY N. SELWAL
DATE REVISED

LAST REVISION DATE PLOTTED => 08-APR-2010
TIME PLOTTED => 10:24

Dist	COUNTY	ROUTE	KILOMETER POST TOTAL PROJECT	SHEET No.	TOTAL SHEETS
03	Nev	49	15.4/18.0	11	312

REGISTERED CIVIL ENGINEER 10-29-08 DATE

3-23-09
PLANS APPROVAL DATE

REGISTERED PROFESSIONAL ENGINEER ARSHAD IQBAL No. C62831 Exp. 6-30-10 CIVIL STATE OF CALIFORNIA

THE STATE OF CALIFORNIA OR ITS OFFICERS OR AGENTS SHALL NOT BE RESPONSIBLE FOR THE ACCURACY OR COMPLETENESS OF ELECTRONIC COPIES OF THIS PLAN SHEET.

Caltrans Metric

3 REVISED PER ADDENDUM No. 3 DATED APRIL 12, 2010

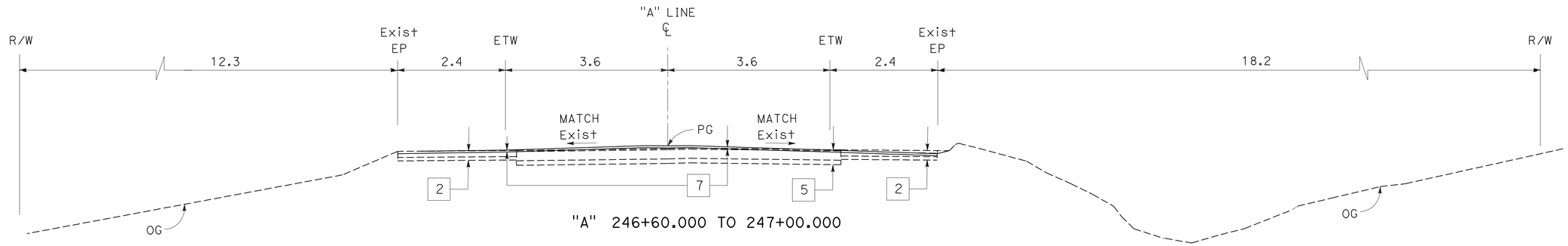

"A" 246+60.000 TO 247+00.000

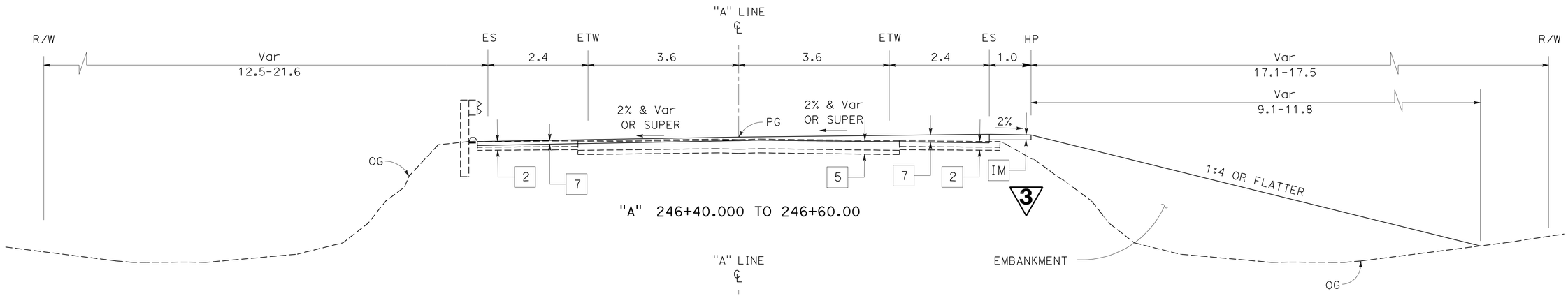

"A" 246+40.000 TO 246+60.00

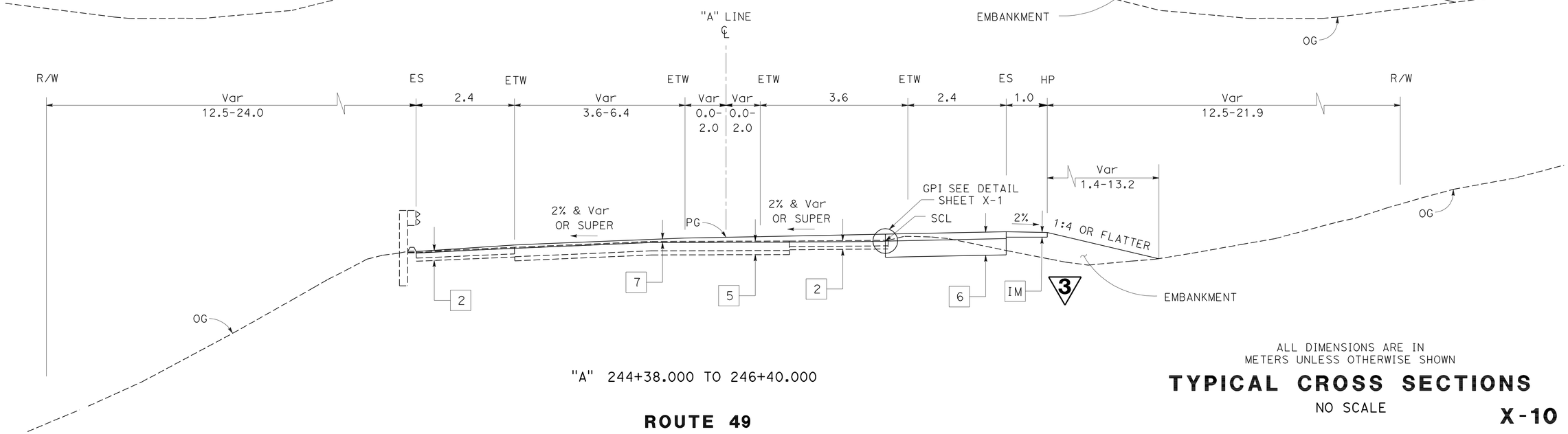

"A" 244+38.000 TO 246+40.000

ALL DIMENSIONS ARE IN METERS UNLESS OTHERWISE SHOWN

TYPICAL CROSS SECTIONS

NO SCALE

X-10

ROUTE 49

STATE OF CALIFORNIA - DEPARTMENT OF TRANSPORTATION
SOUTH REGION
OFFICE OF DESIGN, SOUTH
DESIGN BRANCH S16

Caltrans

FUNCTIONAL SUPERVISOR: M. ALVANDI
CALCULATED-DESIGNED BY: N. SELWAL
CHECKED BY: A. IQBAL
REVISED BY / DATE REVISED

LAST REVISION DATE PLOTTED => 08-APR-2010
TIME PLOTTED => 10:25

Dist	COUNTY	ROUTE	KILOMETER POST TOTAL PROJECT	SHEET No.	TOTAL SHEETS
03	Nev	49	15.4/18.0	21	312

REGISTERED CIVIL ENGINEER 10-29-08 DATE

3-23-09
PLANS APPROVAL DATE

REGISTERED PROFESSIONAL ENGINEER ARSHAD IQBAL No. C62831 Exp. 6-30-10 CIVIL STATE OF CALIFORNIA

THE STATE OF CALIFORNIA OR ITS OFFICERS OR AGENTS SHALL NOT BE RESPONSIBLE FOR THE ACCURACY OR COMPLETENESS OF ELECTRONIC COPIES OF THIS PLAN SHEET.

Caltrans Metric

NOTES:

1. FOR COMPLETE RIGHT OF WAY AND ACCURATE ACCESS DATA, SEE RIGHT OF WAY RECORD MAPS AT DISTRICT OFFICE.
2. FOR HMA DIKE LOCATION; SEE SHEET Q-1.
3. FOR RUMBLE STRIP, SEE SHEET Q-3 FOR LOCATIONS, PDD-2 FOR PLACEMENT, AND STANDARD PLAN A40B FOR ADDITIONAL INFORMATION.
4. FENCE (TYPE WM, METAL POST) AND DEER FENCE (TYPE WM, METAL POST) CALLS ARE TO R/W, SEE STANDARD PLANS A86 FOR ADDITIONAL INFORMATION.

LEGEND:

- REMOVE BASE AND SURFACING ~~OBLITERATE SURFACING~~ 3
- REPLACE AC SURFACING
- DEER ESCAPE RAMP
- PLACE 75 mm HMA (Misc AREA)
- CONCRETE BARRIER
- SOUNDWALL ON PILE CAP/ CONCRETE BARRIER
- ~~CRASH CUSHION (ADIEM)~~ 3
- C F CUT/FILL LINE
- TCE/PTE 3 (Parcel No. 34889 AND 34913)
- WORK AROUND AREA ~~(Parcel No. 34889)~~

ABBREVIATION:

MVP	MAINTENANCE VEHICLE PULLOUT
TCE	TEMPORARY CONSTRUCTION EASEMENT
PTE	PERMIT TO ENTER
NC R/W	NEVADA COUNTY RIGHT OF WAY
AFTS	ALTERNATIVE FLARED TERMINAL SYSTEM
AILTS	ALTERNATIVE IN-LINE TERMINAL SYSTEM

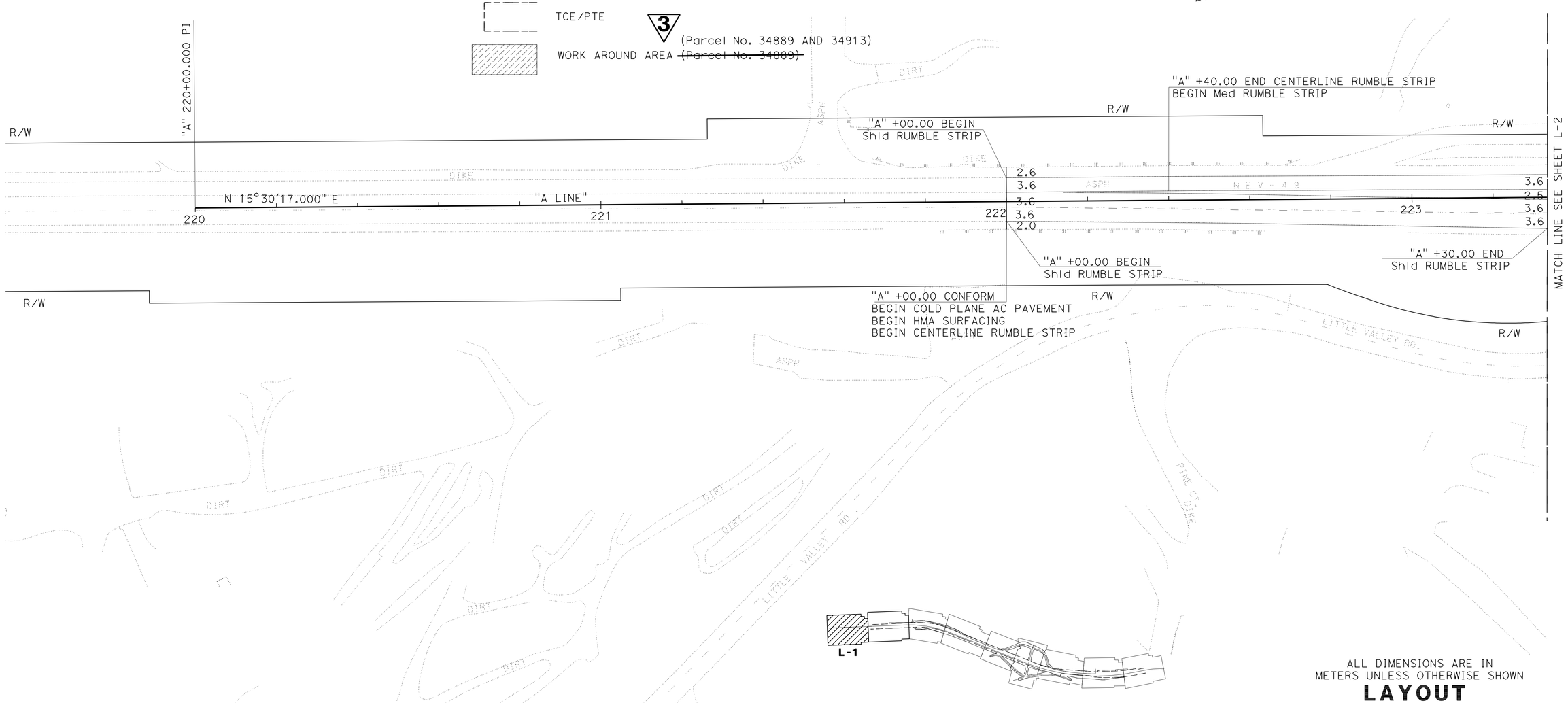

3 REVISED PER ADDENDUM No. 3 DATED APRIL 12, 2010

ALL DIMENSIONS ARE IN METERS UNLESS OTHERWISE SHOWN

LAYOUT

SCALE 1:500

L-1

STATE OF CALIFORNIA - DEPARTMENT OF TRANSPORTATION
SOUTH REGION
OFFICE OF DESIGN SOUTH
DESIGN BRANCH S16

Caltrans

FUNCTIONAL SUPERVISOR M. ALVANDI

CALCULATED-DESIGNED BY A. IQBAL

CHECKED BY N. SELWAL

REVISED BY | DATE REVISED

LAST REVISION DATE PLOTTED => 08-APR-2010
TIME PLOTTED => 10:25

Dist	COUNTY	ROUTE	KILOMETER POST TOTAL PROJECT	SHEET No.	TOTAL SHEETS
03	Nev	49	15.4/18.0	25	312

REGISTERED CIVIL ENGINEER 10-29-08 DATE

3-23-09
PLANS APPROVAL DATE

REGISTERED PROFESSIONAL ENGINEER ARSHAD IQBAL No. C62831 Exp. 6-30-10 CIVIL STATE OF CALIFORNIA

THE STATE OF CALIFORNIA OR ITS OFFICERS OR AGENTS SHALL NOT BE RESPONSIBLE FOR THE ACCURACY OR COMPLETENESS OF ELECTRONIC COPIES OF THIS PLAN SHEET.

Caltrans Metric

NOTE:

FOR COMPLETE RIGHT OF WAY AND ACCURATE ACCESS DATA, SEE RIGHT OF WAY RECORD MAPS AT DISTRICT OFFICE.

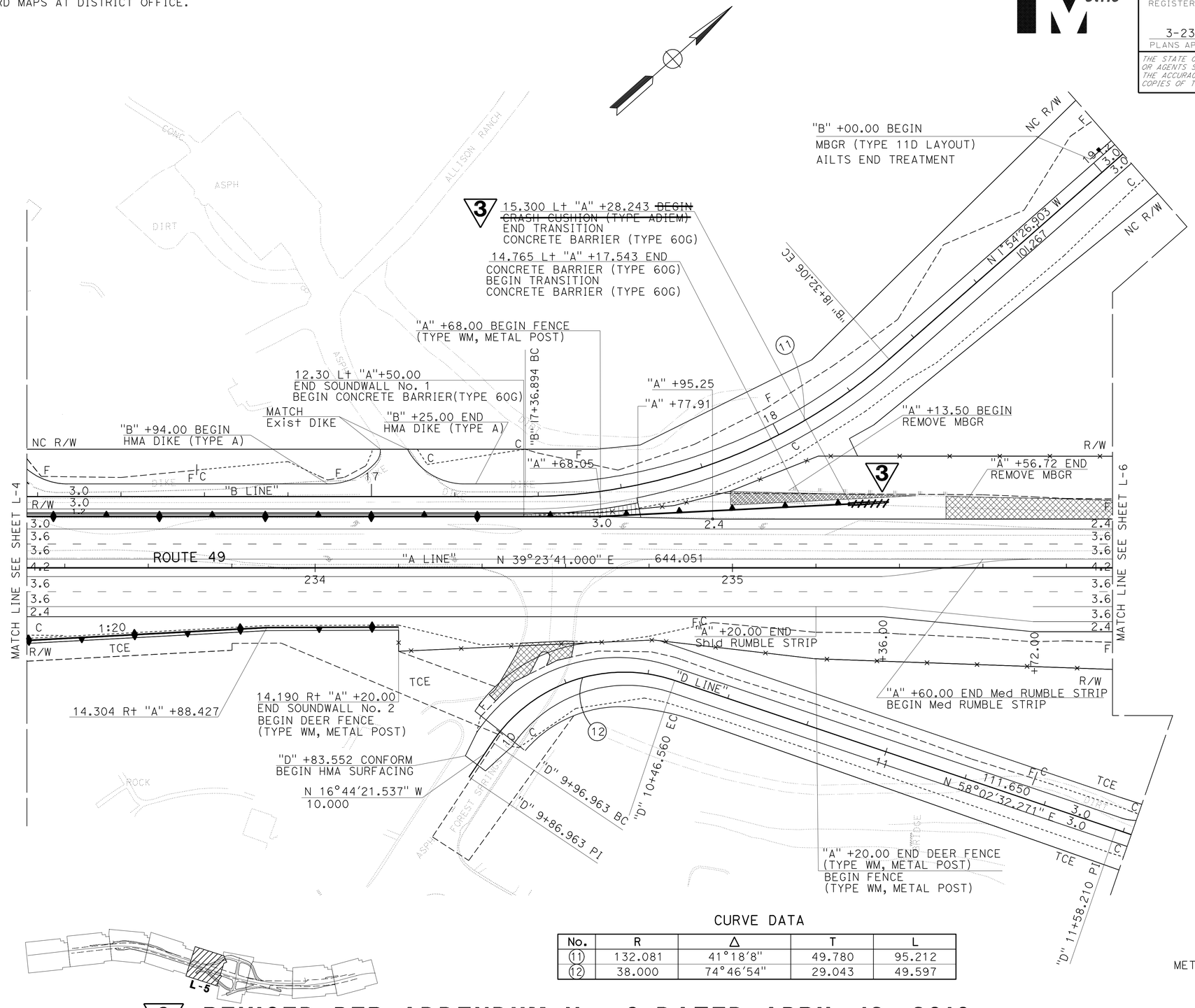

CURVE DATA

No.	R	Δ	T	L
11	132.081	41°18'8"	49.780	95.212
12	38.000	74°46'54"	29.043	49.597

3 **REVISED PER ADDENDUM No. 3 DATED APRIL 12, 2010**

ALL DIMENSIONS ARE IN METERS UNLESS OTHERWISE SHOWN

LAYOUT
SCALE 1:500

L-5

STATE OF CALIFORNIA - DEPARTMENT OF TRANSPORTATION
SOUTH REGION
OFFICE OF DESIGN SOUTH
DESIGN BRANCH S16

FUNCTIONAL SUPERVISOR: M. ALVANDI
CALCULATED-DESIGNED BY: N. SELWAL
CHECKED BY: A. IQBAL
REVISED BY / DATE REVISED

LAST REVISION DATE PLOTTED => 08-APR-2010
TIME PLOTTED => 10:25

NOTE:

FOR COMPLETE RIGHT OF WAY AND ACCURATE ACCESS DATA, SEE RIGHT OF WAY RECORD MAPS AT DISTRICT OFFICE.

Dist	COUNTY	ROUTE	KILOMETER POST TOTAL PROJECT	SHEET No.	TOTAL SHEETS
03	Nev	49	15.4/18.0	26	312

REGISTERED CIVIL ENGINEER 10-29-08 DATE

3-23-09
PLANS APPROVAL DATE

REGISTERED PROFESSIONAL ENGINEER ARSHAD IQBAL No. C62831 Exp. 6-30-10 CIVIL STATE OF CALIFORNIA

THE STATE OF CALIFORNIA OR ITS OFFICERS OR AGENTS SHALL NOT BE RESPONSIBLE FOR THE ACCURACY OR COMPLETENESS OF ELECTRONIC COPIES OF THIS PLAN SHEET.

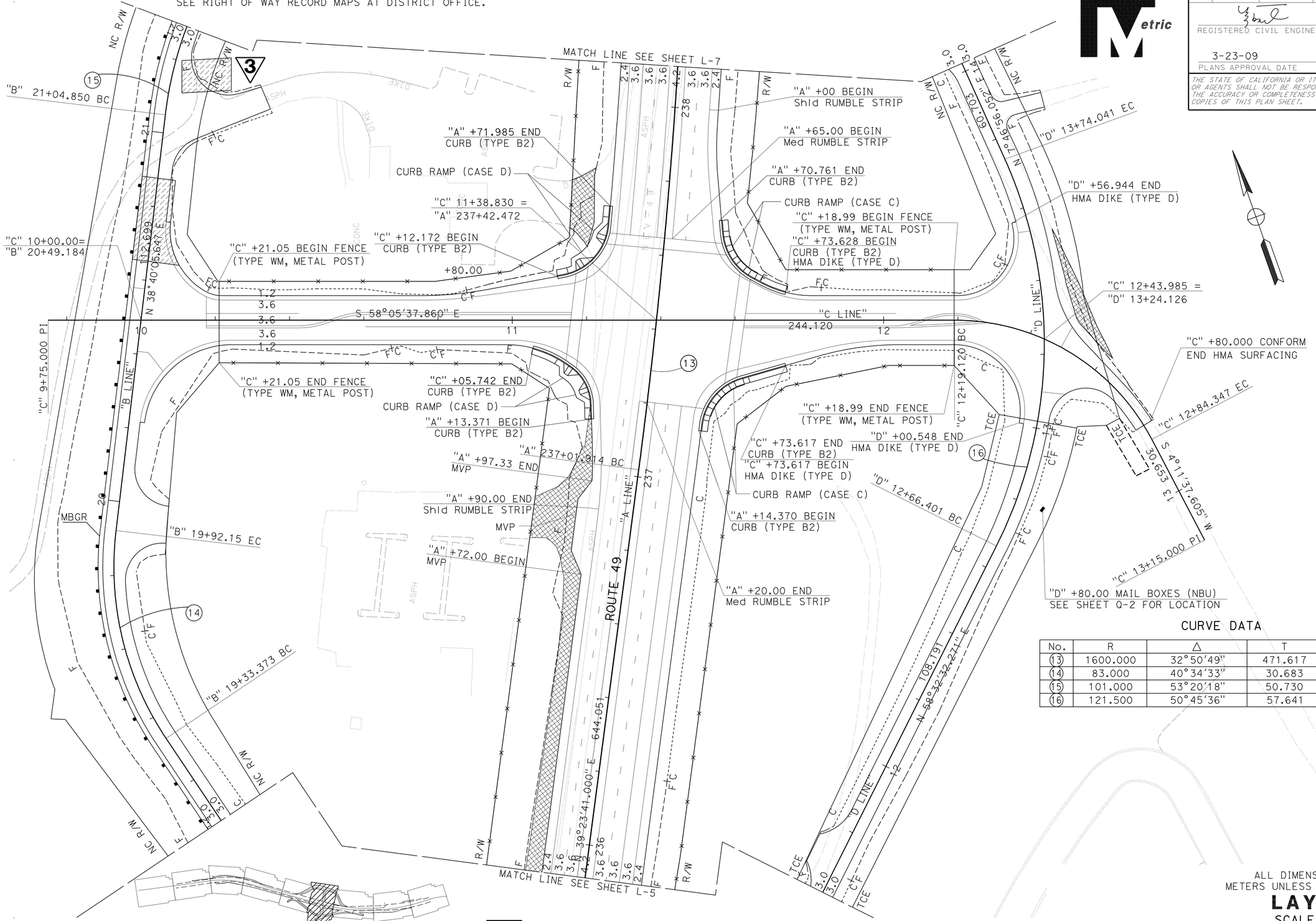

CURVE DATA

No.	R	Δ	T	L
13	1600.000	32°50'49"	471.617	917.257
14	83.000	40°34'33"	30.683	58.779
15	101.000	53°20'18"	50.730	94.024
16	121.500	50°45'36"	57.641	107.641

ALL DIMENSIONS ARE IN METERS UNLESS OTHERWISE SHOWN

LAYOUT

SCALE 1:500

3 **REVISED PER ADDENDUM No. 3 DATED APRIL 12, 2010**

L-6

REVISED BY	DATE REVISED

CALCULATED-DESIGNED BY	N. SELWAL
CHECKED BY	A. IQBAL
FUNCTIONAL SUPERVISOR	M. ALVANDI

STATE OF CALIFORNIA - DEPARTMENT OF TRANSPORTATION
SOUTH REGION
OFFICE OF DESIGN SOUTH
DESIGN BRANCH S16

LAST REVISION DATE PLOTTED => 08-APR-2010
TIME PLOTTED => 10:25

NOTE:

FOR COMPLETE RIGHT OF WAY AND ACCURATE ACCESS DATA, SEE RIGHT OF WAY RECORD MAPS AT DISTRICT OFFICE.

CURVE DATA

No.	R	Δ	T	L
13	1600.000	32°50′49″	471.617	917.257
15	101.000	53°20′18″	50.730	94.024
17	71.606	61°51′24″	42.904	77.306
18	1582.902	11°51′25″	164.374	327.574
19	430.000	31°55′14″	122.978	239.561

Caltrans Metric

Dist	COUNTY	ROUTE	KILOMETER POST TOTAL PROJECT	SHEET No.	TOTAL SHEETS
03	Nev	49	15.4/18.0	27	312

REGISTERED CIVIL ENGINEER 10-29-08 DATE

3-23-09
PLANS APPROVAL DATE

REGISTERED PROFESSIONAL ENGINEER ARSHAD IQBAL No. C62831 Exp. 6-30-10 CIVIL STATE OF CALIFORNIA

THE STATE OF CALIFORNIA OR ITS OFFICERS OR AGENTS SHALL NOT BE RESPONSIBLE FOR THE ACCURACY OR COMPLETENESS OF ELECTRONIC COPIES OF THIS PLAN SHEET.

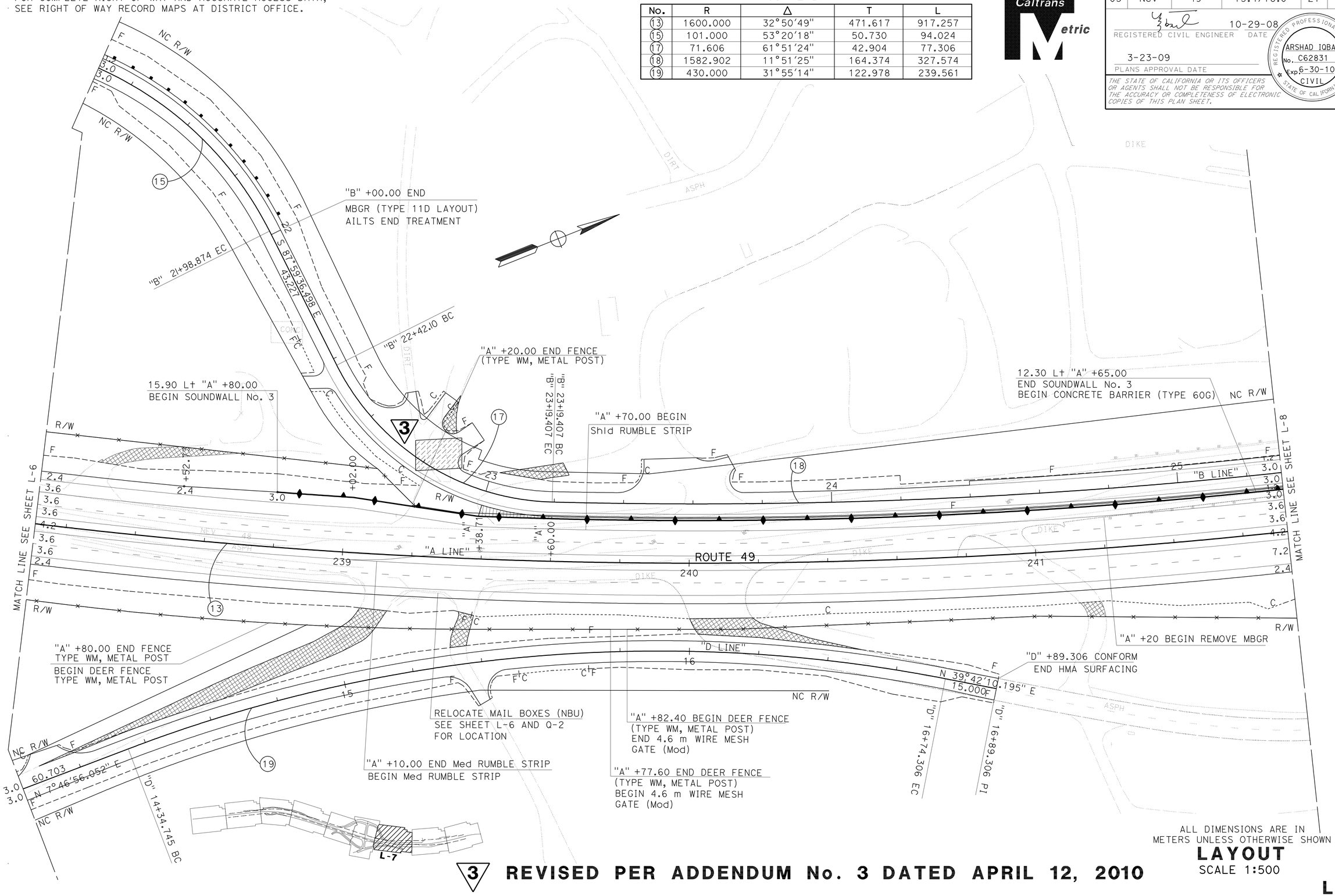

3 REVISED PER ADDENDUM No. 3 DATED APRIL 12, 2010

ALL DIMENSIONS ARE IN METERS UNLESS OTHERWISE SHOWN

LAYOUT
SCALE 1:500

L-7

STATE OF CALIFORNIA - DEPARTMENT OF TRANSPORTATION
SOUTH REGION
OFFICE OF DESIGN, SOUTH
DESIGN BRANCH S16

Caltrans

FUNCTIONAL SUPERVISOR: M. ALVANDI
CALCULATED-DESIGNED BY: N. SELWAL
CHECKED BY: A. IQBAL
REVISED BY
DATE REVISED

LAST REVISION
DATE PLOTTED => 08-APR-2010
TIME PLOTTED => 10:25

Dist	COUNTY	ROUTE	KILOMETER POST TOTAL PROJECT	SHEET No.	TOTAL SHEETS
03	Nev	49	15.4/18.0	28	312

REGISTERED CIVIL ENGINEER 10-29-08 DATE

3-23-09
PLANS APPROVAL DATE

REGISTERED PROFESSIONAL ENGINEER ARSHAD IQBAL No. C62831 Exp. 6-30-10 CIVIL STATE OF CALIFORNIA

THE STATE OF CALIFORNIA OR ITS OFFICERS OR AGENTS SHALL NOT BE RESPONSIBLE FOR THE ACCURACY OR COMPLETENESS OF ELECTRONIC COPIES OF THIS PLAN SHEET.

Caltrans Metric

NOTE:

FOR COMPLETE RIGHT OF WAY AND ACCURATE ACCESS DATA, SEE RIGHT OF WAY RECORD MAPS AT DISTRICT OFFICE.

CURVE DATA

No.	R	Δ	T	L
13	1600.000	32°50′49″	471.617	917.257
18	1582.902	11°51′25″	164.374	327.574
20	16.828	101°30′37″	20.600	29.814

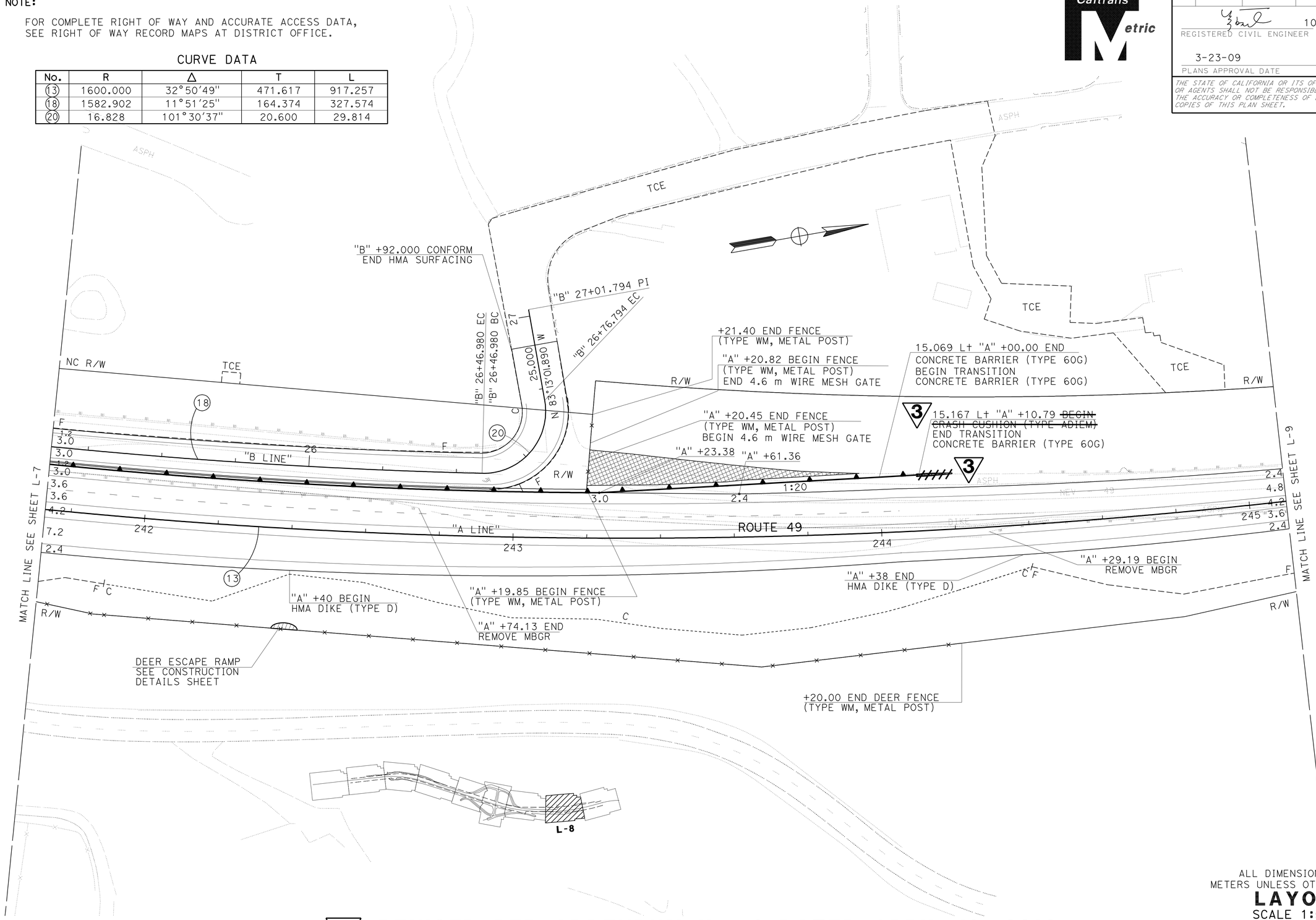

ALL DIMENSIONS ARE IN METERS UNLESS OTHERWISE SHOWN

LAYOUT

SCALE 1:500

3 **REVISED PER ADDENDUM No. 3 DATED APRIL 12, 2010**

L-8

STATE OF CALIFORNIA - DEPARTMENT OF TRANSPORTATION
SOUTH REGION
OFFICE OF DESIGN,SOUTH
DESIGN BRANCH S16

Caltrans

FUNCTIONAL SUPERVISOR: M. ALVANDI

CALCULATED-DESIGNED BY: N. SELWAL

CHECKED BY: A. IQBAL

REVISED BY | DATE REVISED

LAST REVISION | DATE PLOTTED => 08-APR-2010 | TIME PLOTTED => 10:25

BORDER LAST REVISED 3/1/2007 | RELATIVE BORDER SCALE IS IN MILLIMETERS 0 20 40 60 80 | USERNAME => trmikesl | DGN FILE => 32a690ea008.add | CU 03266 | EA 2a6901

Dist	COUNTY	ROUTE	KILOMETER POST TOTAL PROJECT	SHEET No.	TOTAL SHEETS
03	Nev	49	15.4/18.0	48	312

REGISTERED CIVIL ENGINEER 10-29-08 DATE

3-23-09
PLANS APPROVAL DATE

REGISTERED PROFESSIONAL ENGINEER ARSHAD IQBAL No. C62831 Exp. 6-30-10 CIVIL STATE OF CALIFORNIA

THE STATE OF CALIFORNIA OR ITS OFFICERS OR AGENTS SHALL NOT BE RESPONSIBLE FOR THE ACCURACY OR COMPLETENESS OF ELECTRONIC COPIES OF THIS PLAN SHEET.

Caltrans Metric

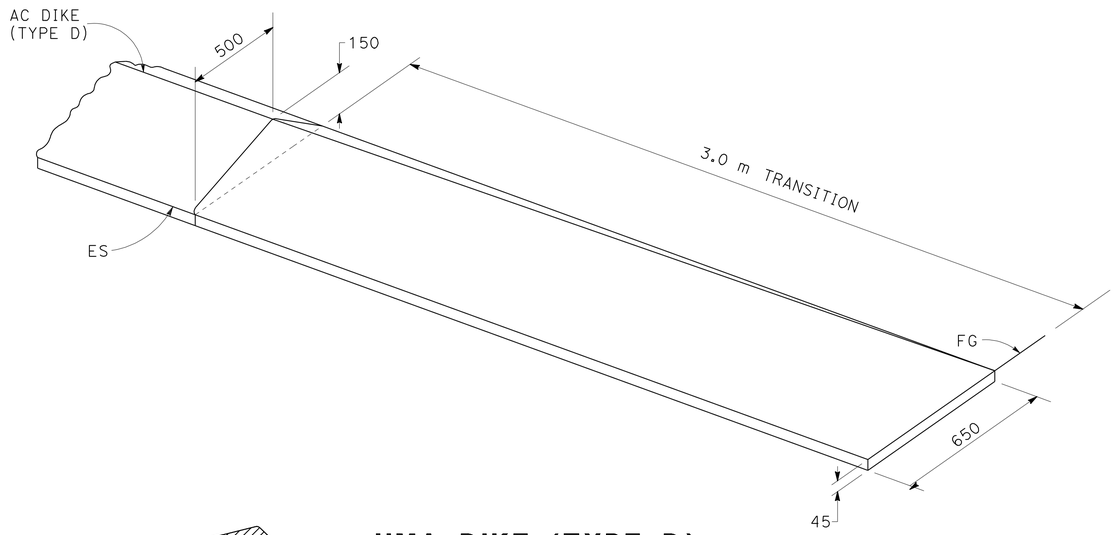

TYPE D

HMA DIKE (TYPE D) TRANSITION

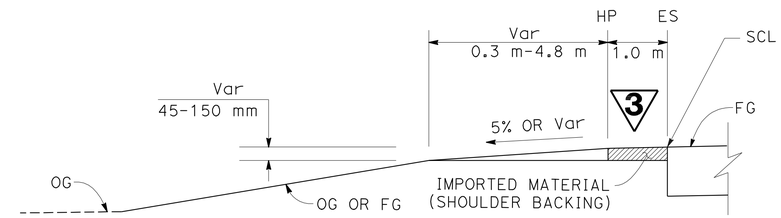

IMPORTED MATERIAL (SHOULDER BACKING) DETAIL

3

~~IMPORTED MATERIAL (SHOULDER BACKING)~~	
~~LOCATION~~	~~(N) TONNE~~
~~"A" 229+40.00 L+ TO "A" 229+80.00 L+~~	~~41.8~~
~~"A" 235+60.00 L+ TO "A" 236+01.00 L+~~	~~57.2~~
~~"A" 236+39.00 L+ TO "A" 237+06.07 L+~~	~~98.6~~
~~TOTAL~~	~~197.6~~

~~(N) NOT A SEPARATE PAY ITEM, FOR INFORMATION ONLY~~
~~TOTAL QUANTITY ADDED TO ROADWAY QUANTITIES, SEE SHEET Q-1~~

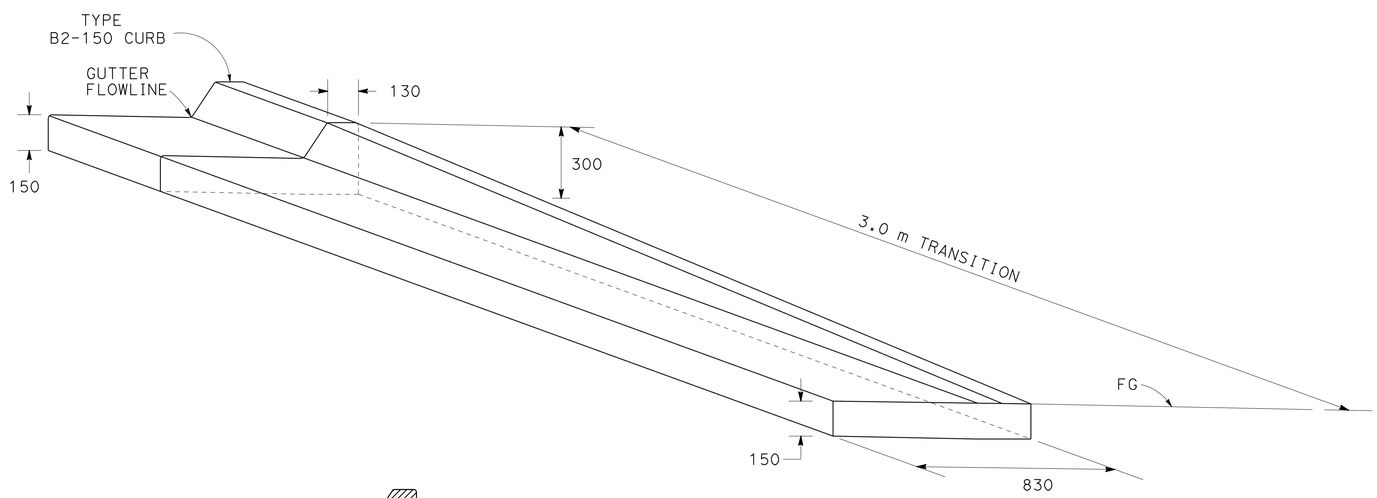

B2-150

TYPE B2-150 TRANSITION

ALL DIMENSIONS ARE IN MILLIMETERS UNLESS OTHERWISE SHOWN

3 REVISED PER ADDENDUM No. 3 DATED APRIL 12, 2010

CONSTRUCTION DETAILS

NO SCALE

C-3

STATE OF CALIFORNIA - DEPARTMENT OF TRANSPORTATION
SOUTH REGION
OFFICE OF DESIGN SOUTH
DESIGN BRANCH S16

Caltrans

FUNCTIONAL SUPERVISOR: M. ALVANDI
CALCULATED-DESIGNED BY: N. SELWAL
CHECKED BY: A. IQBAL
REVISED BY
DATE REVISED

LAST REVISION 09-26-07
DATE PLOTTED => 08-APR-2010
TIME PLOTTED => 10:25

Dist	COUNTY	ROUTE	KILOMETER POST TOTAL PROJECT	SHEET No.	TOTAL SHEETS
03	Nev	49	15.4/18.0	99	312

REGISTERED CIVIL ENGINEER — DATE 7-31-08

3-23-09
PLANS APPROVAL DATE

REGISTERED PROFESSIONAL ENGINEER JAMES PHILIPP No. C59614 Exp. 12-31-09 CIVIL STATE OF CALIFORNIA

THE STATE OF CALIFORNIA OR ITS OFFICERS OR AGENTS SHALL NOT BE RESPONSIBLE FOR THE ACCURACY OR COMPLETENESS OF ELECTRONIC COPIES OF THIS PLAN SHEET.

Caltrans Metric

LEGEND: CLASS 4 CONCRETE (BACKFILL)

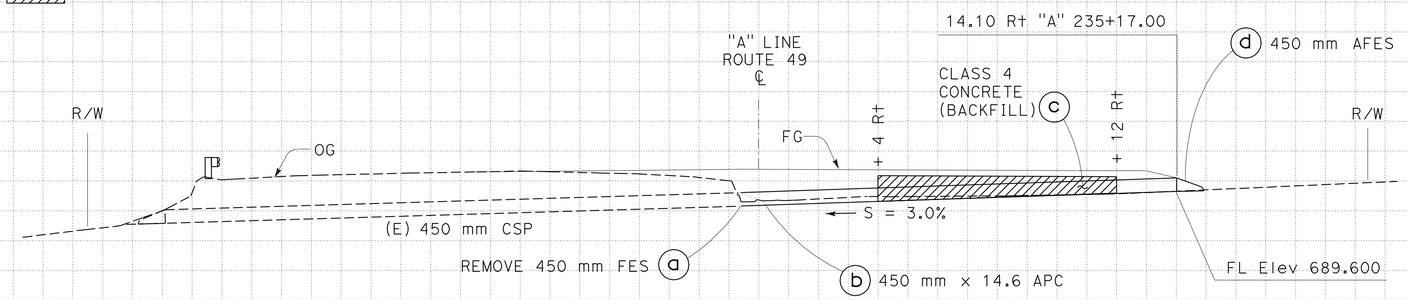

DRAINAGE SYSTEM No. 21

"A" 235+17.00
3.50° SKEW

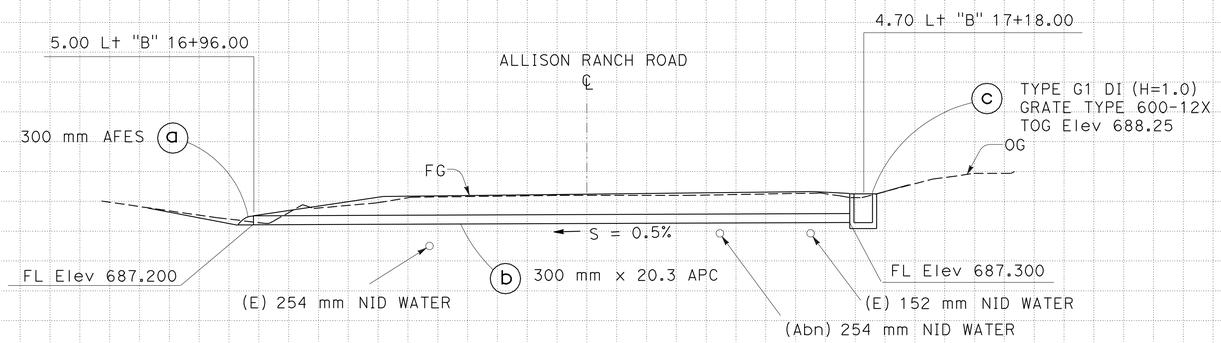

DRAINAGE SYSTEM No. 20

"B" 17+7.00 Lt

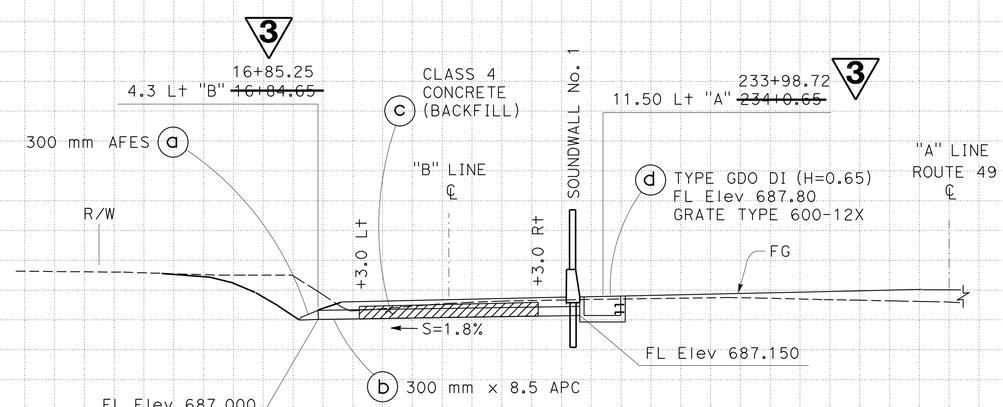

DRAINAGE SYSTEM No. 19

"A" ~~234+0.65~~ Lt
3 233+98.72

3 **REVISED PER ADDENDUM No. 3 DATED APRIL 12, 2010**

ALL DIMENSIONS ARE IN
METERS UNLESS OTHERWISE SHOWN

DRAINAGE PROFILES

SCALE 1:100 Horiz
1:100 Vert

DP-8

REVISED BY	DATE REVISED

JAMES M. PHILIPP

CALCULATED-DESIGNED BY
CHECKED BY

FUNCTIONAL SUPERVISOR
DENNIS R. JAGODA

STATE OF CALIFORNIA - DEPARTMENT OF TRANSPORTATION
DESIGN AND ENGINEERING SERVICES
HYDRAULICS
Caltrans

Station		
m^3	Exc	
	Emb	

LAST REVISION 03-12-08 DATE PLOTTED => 08-APR-2010 TIME PLOTTED => 10:26

Dist	COUNTY	ROUTE	KILOMETER POST TOTAL PROJECT	SHEET No.	TOTAL SHEETS
03	Nev	49	15.4/18.0	101	312

REGISTERED CIVIL ENGINEER 7-31-08 DATE

3-23-09
PLANS APPROVAL DATE

REGISTERED PROFESSIONAL ENGINEER JAMES PHILIPP No. C59614 Exp. 12-31-09 CIVIL STATE OF CALIFORNIA

THE STATE OF CALIFORNIA OR ITS OFFICERS OR AGENTS SHALL NOT BE RESPONSIBLE FOR THE ACCURACY OR COMPLETENESS OF ELECTRONIC COPIES OF THIS PLAN SHEET.

Caltrans Metric

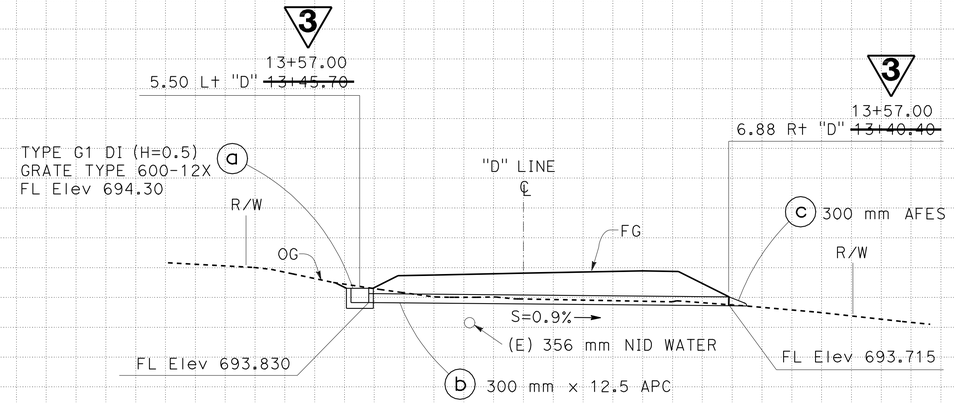

DRAINAGE SYSTEM No. 27

"D" 13+57.00

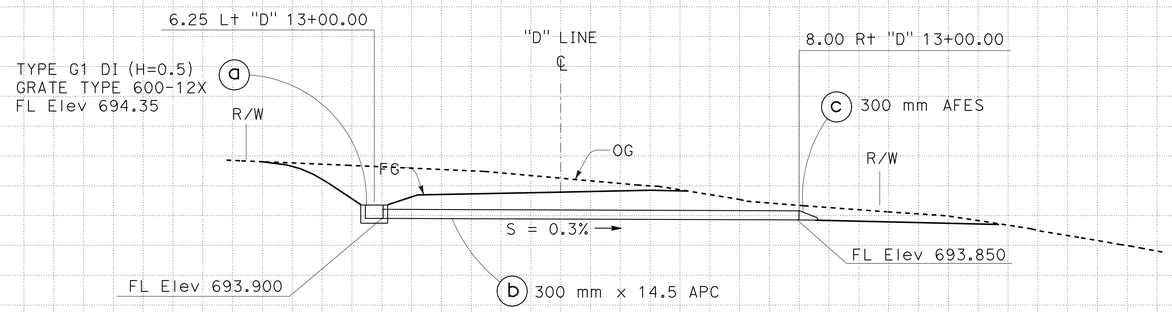

DRAINAGE SYSTEM No. 26

"D" 13+00.00

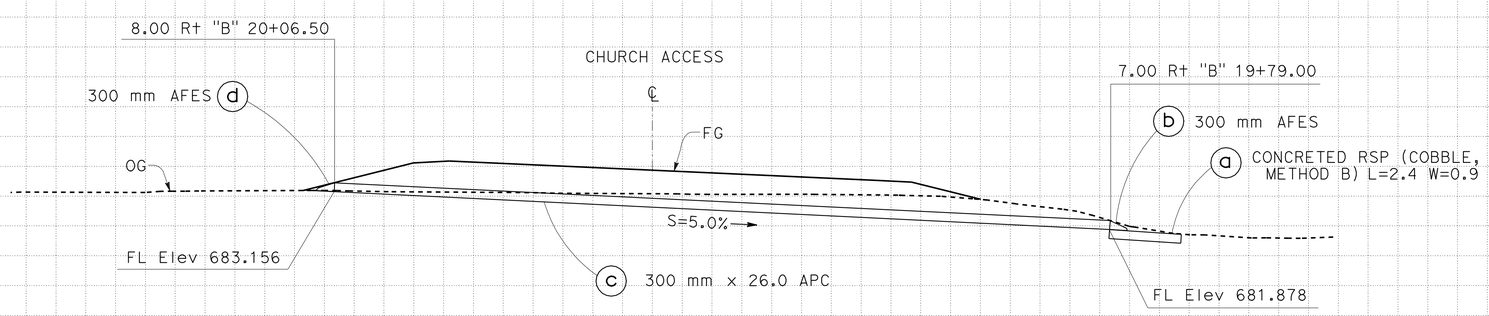

DRAINAGE SYSTEM No. 25

Rt "B" 19+96.00

ALL DIMENSIONS ARE IN METERS UNLESS OTHERWISE SHOWN

DRAINAGE PROFILES

SCALE 1:100 Horiz
1:100 Vert

DP-10

3 **REVISED PER ADDENDUM No. 3 DATED APRIL 12, 2010**

Station	
m^3 Exc	
m^3 Emb	

REVISED BY | DATE REVISED

JAMES M. PHILIPP

CALCULATED-DESIGNED BY | CHECKED BY

FUNCTIONAL SUPERVISOR DENNIS R. JAGODA

STATE OF CALIFORNIA - DEPARTMENT OF TRANSPORTATION
DESIGN AND ENGINEERING SERVICES
HYDRAULICS
Caltrans

LAST REVISION 03-12-08 DATE PLOTTED => 08-APR-2010 TIME PLOTTED => 10:26

Dist	COUNTY	ROUTE	KILOMETER POST TOTAL PROJECT	SHEET No.	TOTAL SHEETS
03	Nev	49	15.4/18.0	116	312

REGISTERED CIVIL ENGINEER — DATE 7-31-08

3-23-09
PLANS APPROVAL DATE

REGISTERED PROFESSIONAL ENGINEER — JAMES PHILIPP — No. C59614 — Exp. 12-31-09 — CIVIL — STATE OF CALIFORNIA

THE STATE OF CALIFORNIA OR ITS OFFICERS OR AGENTS SHALL NOT BE RESPONSIBLE FOR THE ACCURACY OR COMPLETENESS OF ELECTRONIC COPIES OF THIS PLAN SHEET.

Caltrans Metric

NOTES:

(1) RCP SHALL BE CLASS 5, CONSTRUCTED BY METHOD 2.

(2) PP = PLASTIC PIPE (TYPE-S)
PP LINER SHALL HAVE NPS OF 450 mm, SDR 26
PS = POLYMERIC SHEET COATING
PA = POLYMERIZED ASPHALT
HDPE = HIGH DENSITY POLYETHYLENE PIPE
JOINTS "STANDARD" EXCEPT DD WHICH ARE "DD JOINTS"
(N) - NOT A SEPARATE PAY ITEM, FOR INFORMATION ONLY.

3

ALTERNATIVE PIPE CULVERT

ALLOWABLE PIPE MATERIAL AND PROTECTION							
DESIGNATION	RCP (1)	CSP					PP (2)
	SIZE (mm)	SIZE (mm)	Thick (mm)	PS COAT	Thick (mm)	PA COAT	SIZE (mm)
300 mm	300	300	1.63	YES (1)	1.63	YES (2)	300
450 mm TYPE A	450	450	1.63	YES (1)	1.63	YES (2)	450
450 mm TYPE B	**450**	**NOT ALLOWED**					**450**

DRAINAGE QUANTITIES

3

DRAINAGE PLAN SHEET No.	DRAINAGE SYSTEM No. ⬡	DRAINAGE UNIT ◯	ABANDON CULVERT (EA)	SAND BACKFILL (m^3)	CLASS 4 CONCRETE (BACKFILL) (m^3)	REMOVE CULVERT (m)	REMOVE FES (EA)	REMOVE HEADWALL (EA)	REMOVE INLET (EA)	DRAINAGE INLET: 900 mm CSP INLET (2.77 mm) (m)	DRAINAGE INLET: INLET TYPE (N)	DRAINAGE INLET: FRAME AND GRATE TYPE (N)	MINOR CONCRETE (MINOR STRUCTURE) (m^3)	MISC IRON & STEEL (kg)	AFES: 300 mm (EA)	AFES: 450 mm (EA)	APC: 300 mm (m)	APC: 375 mm (m)	APC: **450 mm TYPE A** (m)	APC: **450 mm TYPE B** (m)	450 mm PP LINER (NPS) (m)	200 mm CSP DOWNDRAIN (2.01 mm) (m)	600 mm HDPE ENERGY DISSIPATOR (EA)	CONCRETED RSP: COBBLE, METHOD B (m^3)	CONCRETED RSP: FACING, METHOD B (m^3)	CONCRETED RSP: RSP FABRIC (m^2)	DESCRIPTION	STATION	DRAINAGE PLAN SHEET No.	DRAINAGE SYSTEM No. ⬡	DRAINAGE UNIT ◯
D-1	1	a																						0.65		6.0	CONCRETED RSP, COBBLE	13.65 Lt "A" 225+23.00	D-1	1	a
		b															2										CULVERT, 300 mm APC	15.20 Lt "A" 225+30.00			b
		c									GT3	600-12X	1.08	217													TYPE GT3 DI	15.50 Lt "A" 225+47.00			c
D-1	2	a																						0.65		6.0	CONCRETED RSP, COBBLE	14.30 Rt "A" 225+45.00	D-1	2	a
		b													1												AFES, 300 mm	14.30 Rt "A" 225+45.00			b
		c															18.5										CULVERT, 300 mm APC	14.30 Rt "A" 225+55.00			c
		d													1												AFES, 300 mm	14.30 Rt "A" 225+63.00			d
		e				16																					REMOVE 300 mm CSP	13.00 Rt "A" 225+48.00 TO 225+64.00			e
		f					1																				REMOVE 300 mm FES	13.00 Rt "A" 225+64.00			f
D-1	3	a																						17.3		78	CONCRETED RSP, COBBLE	14.2/16.0 Rt "A" 225+63.00/226+27.00	D-1	3	a
		b													1												AFES, 300 mm	16.00 Rt "A" 226+27.00			b
		c															19.0										CULVERT, 300 mm APC	15.70 Rt "A" 226+36.00			c
		d													1												AFES, 300 mm	15.50 Rt "A" 226+45.00			d
		e				21																					REMOVE 300 mm CSP	12.40 Rt "A" 226+24.00 TO 226+45.00			e
		f					1																				REMOVE 300 mm FES	12.40 Rt "A" 226+45.00			f
D-2	4	a				6																					REMOVE 300 mm CSP	3.85 Rt "B" 10+10.0 TO 10+14.50	D-2	4	a
D-2	5	a				6																					REMOVE 300 mm CSP	1.10 Lt/4.40 Rt "B" 10+41.5/+44	D-2	5	a
D-2	6	a								1	GMP	900RX	0.23	98													TYPE GMP DI	4.80 Lt "B" 10+56.40	D-2	6	a
		b															9.5										CULVERT, 300 mm APC	"B" 10+56.40			b
		c													1												AFES, 300 mm	5.40 Rt "B" 10+56.40			c
SHEET TOTAL						49	2			1			1.31	315	5		49.0							18.60		90.0					

3 **REVISED PER ADDENDUM No. 3 DATED APRIL 12, 2010**

DRAINAGE QUANTITIES
DQ-1

STATE OF CALIFORNIA - DEPARTMENT OF TRANSPORTATION
DESIGN AND ENGINEERING SERVICES
HYDRAULICS
Caltrans

FUNCTIONAL SUPERVISOR: DENNIS R. JAGODA
CALCULATED-DESIGNED BY: JAMES M. PHILIPP
CHECKED BY
REVISED BY
DATE REVISED

LAST REVISION 07-29-08
DATE PLOTTED => 08-APR-2010
TIME PLOTTED => 10:26

Dist	COUNTY	ROUTE	KILOMETER POST TOTAL PROJECT	SHEET No.	TOTAL SHEETS
03	Nev	49	15.4/18.0	117	312

REGISTERED CIVIL ENGINEER — 7-31-08 DATE

3-23-09
PLANS APPROVAL DATE

REGISTERED PROFESSIONAL ENGINEER JAMES PHILIPP No. C59614 Exp. 12-31-09 CIVIL STATE OF CALIFORNIA

THE STATE OF CALIFORNIA OR ITS OFFICERS OR AGENTS SHALL NOT BE RESPONSIBLE FOR THE ACCURACY OR COMPLETENESS OF ELECTRONIC COPIES OF THIS PLAN SHEET.

DRAINAGE QUANTITIES

DRAINAGE PLAN SHEET No.	DRAINAGE SYSTEM No. ⬡	DRAINAGE UNIT ◯	ABANDON CULVERT (EA)	SAND BACKFILL (m^3)	CLASS 4 CONCRETE (BACKFILL) (m^3)	REMOVE CULVERT (m)	REMOVE FES (EA)	REMOVE HEADWALL (EA)	REMOVE INLET (EA)	DRAINAGE INLET: 900 mm CSP INLET (2.77 mm) (m)	DRAINAGE INLET: INLET TYPE (N)	DRAINAGE INLET: FRAME AND GRATE TYPE (N)	MINOR CONCRETE (MINOR STRUCTURE) (m^3)	MISC IRON & STEEL (kg)	AFES: 300 mm (EA)	AFES: 450 mm (EA)	APC 3: 300 mm (m)	APC 3: 375 mm (m)	APC 3: **450 mm TYPE A (m)**	APC 3: **450 mm TYPE B (m)**	450 mm PP LINER (NPS) (m)	200 mm CSP DOWNDRAIN (2.01 mm) (m)	600 mm HDPE ENERGY DISSIPATOR (EA)	CONCRETED RSP: COBBLE, METHOD B (m^3)	CONCRETED RSP: FACING, METHOD B (m^3)	CONCRETED RSP: RSP FABRIC (m^2)	DESCRIPTION	STATION	DRAINAGE PLAN SHEET No.	DRAINAGE SYSTEM No. ⬡	DRAINAGE UNIT ◯
D-2	7	a											0.53	18													MOD 300 mm HW	8.60 L+ "B" 10+92.00	D-2	7	a
		b															26.5										CULVERT, 300 mm APC	8.6 L+/12.3 R+ "B" 10+92.00/+78.70			b
		c								2.0	OMPI	900RX	0.23	98													TYPE OMPI DI	21.33 L+ "A" 228+4.00			c
		d						1																			REMOVE HEADWALL	21.33 L+ "A" 228+4.00			d
		e																			36.5						450 mm PP LINER (NPS)	21.40 L+/15.30 R+ "A" 228+02.00			e
		f																				16.2					200 mm CSP w/DD JOINT	12.70 R+ "A" 228+2.00			f
		g				6																					REMOVE 600 mm CSP	15.30 R+ "A" 228+2.00			g
		h																		**12.0**							CULVERT, 450 mm APC	15.30 R+ "A" 228+2.00			h
		i								2.5	GMP	900RX	0.23	98													TYPE GMP DI	25.90 R+ "A" 228+0.00			i
		j																	6.0								CULVERT, 450 mm APC	25.90 R+ "A" 228+0.00			j
		k																						1.34		7.6	CONCRETED RSP, COBBLE	29.60 R+ "A" 227+92.00			k
D-2	8	a						1																			REMOVE HEADWALL	10.80 L+ "B" 10+90.00	D-2	8	a
		b	1	1.3																							ABANDON 300 mm CSP	10.8 L+ "B" 10+90.00/6.8 R+ 10+86.00			b
		c						1																			REMOVE HEADWALL	6.80 R+ "B" 10+86.00			c
D-2	9	a														1											AFES, 450 mm	6.40 L+ "LJB" 10+20.00	D-2	9	a
		b																	15								CULVERT, 450 mm CSP	"LJB" 10+20			b
		c														1											AFES, 450 mm	8.00 R+ "LJB" 10+20.00			c
		d																							2.0	7.6	CONCRETED RSP, FACING	8.00 R+ "LJB" 10+20.00			d
D-2	10	a																						0.65		6.0	CONCRETED RSP, COBBLE	4.30 L+ "LJC" 10+06.00	D-2	10	a
		b													1												AFES, 300 mm	4.30 L+ "LJC" 10+06.00			b
		c															8.0										CULVERT, 300 mm APC	"LJC" 10+06.00			c
		d													1												AFES, 300 mm	3.00 R+ "LJC" 10+06.00			d
D-2	11	a	1	2.9																							ABANDON 450 mm CSP	1.0 TO 20.0 L+ "A" 228+86.0/+87.70	D-2	11	a
		b					1																				REMOVE 450 mm FES	1.0 L+ "A" 228+86.00			b
SHEET TOTAL			2	4.2		6.0	1	3		4.5			0.99	214	2	2	34.5		**21**	**12.0**	36.5	16.2		1.99	2.0	21.2					

3 **REVISED PER ADDENDUM No. 3 DATED APRIL 12, 2010**

DRAINAGE QUANTITIES
DQ-2

STATE OF CALIFORNIA - DEPARTMENT OF TRANSPORTATION
DESIGN AND ENGINEERING SERVICES
HYDRAULICS
Caltrans

FUNCTIONAL SUPERVISOR: DENNIS R. JAGODA
CALCULATED-DESIGNED BY: JAMES M. PHILIPP
CHECKED BY
REVISED BY
DATE REVISED

LAST REVISION 04-23-08 | DATE PLOTTED => 08-APR-2010 | TIME PLOTTED => 10:26

Dist	COUNTY	ROUTE	KILOMETER POST TOTAL PROJECT	SHEET No.	TOTAL SHEETS
03	Nev	49	15.4/18.0	118	312

REGISTERED CIVIL ENGINEER 7-31-08 DATE

3-23-09
PLANS APPROVAL DATE

REGISTERED PROFESSIONAL ENGINEER JAMES PHILIPP No. C59614 Exp. 12-31-09 CIVIL STATE OF CALIFORNIA

THE STATE OF CALIFORNIA OR ITS OFFICERS OR AGENTS SHALL NOT BE RESPONSIBLE FOR THE ACCURACY OR COMPLETENESS OF ELECTRONIC COPIES OF THIS PLAN SHEET.

Caltrans Metric

DRAINAGE QUANTITIES

DRAINAGE PLAN SHEET No.	DRAINAGE SYSTEM No. ⬡	DRAINAGE UNIT ◯	ABANDON CULVERT (EA)	SAND BACKFILL (m^3)	CLASS 4 CONCRETE (BACKFILL) (m^3)	REMOVE CULVERT (m)	REMOVE FES (EA)	REMOVE HEADWALL (EA)	REMOVE INLET (EA)	DRAINAGE INLET: 900 mm CSP INLET (2.77 mm) (m)	DRAINAGE INLET: INLET TYPE (N)	DRAINAGE INLET: FRAME AND GRATE TYPE (N)	MINOR CONCRETE (MINOR STRUCTURE) (m^3)	MISC IRON & STEEL (kg)	AFES: 300 mm (EA)	AFES: 450 mm (EA)	APC 3: 300 mm (m)	APC 3: 375 mm (m)	APC 3: 450 mm TYPE A (m)	APC 3: 450 mm TYPE A (m)	450 mm PP LINER (NPS) (m)	200 mm CSP DOWNDRAIN (2.01 mm) (m)	600 mm HDPE ENERGY DISSIPATOR (EA)	CONCRETED RSP: COBBLE, METHOD B (m^3)	CONCRETED RSP: FACING, METHOD B (m^3)	CONCRETED RSP: RSP FABRIC (m^2)	DESCRIPTION	STATION	DRAINAGE PLAN SHEET No.	DRAINAGE SYSTEM No. ⬡	DRAINAGE UNIT ◯
D-3	12	a															5.5										CULVERT, 300 mm APC	0.00 R+ "B" 13+98.00	D-3	12	a
↓		b									G1	600-12X	0.52	108													TYPE G1 DI	5.54 R+ "B" 13+98.00	↓		b
D-3	13	a				12.2																					REMOVE 300 mm CSP	1.30 R+ "A" 231+77.0/1.0 R+ 231+89.2	D-3	13	a
D-3	14	a																						1.65		8.7	CONCRETED RSP, COBBLE	5.00 L+ "B" 14+77.90	D-3	14	a
		b											1.04	34													HW, Dbl 450 mm	5.00 L+ "B" 14+77.90			b
		c																	22								CULV, Dbl 450 mm APC	11.80 L+ "A" 231+91.40			c
		d									GT3	600-12X	1.27	217													TYPE GT3 DI	11.50 L+ "A" 231+91.40			d
		e															18.2										CULVERT, 300 mm APC	11.50 L+ "A" 231+70.50 TO +91.40			e
		f									GDO	600-12X	1.57	215													TYPE GDO DI	11.50 L+ "A" 231+70.50			f
		g				17.3																					REMOVE 450 mm CSP	17.30 L+/0.08 R+ "A" 231+89.6/+89.80			g
		h					1																				REMOVE 450 mm FES	0.08 R+ "A" 231+89.80			h
		i																	52								CULV, DBL 450 mm APC	"A" 231+91.40			i
		j									GT3	600-12X	0.89	217													TYPE GT3 DI	13.70 R+ "A" 231+91.40			j
		k																	50								CULVERT, 450 mm CSP	14.0/43.7 R+ "A" 231+91.40/232+30.00			k
		l	1	7.3																							ABANDON 450 mm CSP	43.70/10.80 R+ "A" 232+30/+62.00			l
		m						1																			REMOVE CONC JUNCTION	10.40 R+ "A" 232+62.00			m
		n				11																					REMOVE 450 mm CSP	0.4 L+ TO 9.9 R+ "A" 232+58.5/+62.20	↓		n
D-3	15	a				12.6																					REMOVE 450 mm CSP	0.50 to 0.60 R+ "A" 232+8.70/+21.40	D-3	15	a
SHEET TOTAL			1	7.3		53.1	1		1				5.29	791			23.7		124					1.65		8.7					

3 REVISED PER ADDENDUM No. 3 DATED APRIL 12, 2010

DRAINAGE QUANTITIES
DQ-3

STATE OF CALIFORNIA - DEPARTMENT OF TRANSPORTATION
DESIGN AND ENGINEERING SERVICES
HYDRAULICS
Caltrans

FUNCTIONAL SUPERVISOR: DENNIS R. JAGODA
CALCULATED-DESIGNED BY: JAMES M. PHILIPP
CHECKED BY
REVISED BY
DATE REVISED

LAST REVISION 04-23-08
DATE PLOTTED => 08-APR-2010
TIME PLOTTED => 10:26

Dist	COUNTY	ROUTE	KILOMETER POST TOTAL PROJECT	SHEET No.	TOTAL SHEETS
03	Nev	49	15.4/18.0	119	312

REGISTERED CIVIL ENGINEER — DATE 7-31-08

3-23-09
PLANS APPROVAL DATE

REGISTERED PROFESSIONAL ENGINEER — JAMES PHILIPP — No. C59614 — Exp. 12-31-09 — CIVIL — STATE OF CALIFORNIA

THE STATE OF CALIFORNIA OR ITS OFFICERS OR AGENTS SHALL NOT BE RESPONSIBLE FOR THE ACCURACY OR COMPLETENESS OF ELECTRONIC COPIES OF THIS PLAN SHEET.

Caltrans Metric

DRAINAGE QUANTITIES

DRAINAGE PLAN SHEET No.	DRAINAGE SYSTEM No. ⬡	DRAINAGE UNIT ◯	ABANDON CULVERT (EA)	SAND BACKFILL (m^3)	CLASS 4 CONCRETE (BACKFILL) (m^3)	REMOVE CULVERT (m)	REMOVE FES (EA)	REMOVE HEADWALL (EA)	REMOVE INLET (EA)	DRAINAGE INLET: 900 mm CSP INLET (2.77 mm) (m)	DRAINAGE INLET: INLET TYPE (N)	DRAINAGE INLET: FRAME AND GRATE TYPE (N)	MINOR CONCRETE (MINOR STRUCTURE) (m^3)	MISC IRON & STEEL (kg)	AFES: 300 mm (EA)	AFES: 450 mm (EA)	APC ③: 300 mm (m)	APC ③: 375 mm (m)	APC ③: **450 mm TYPE A** (m)	APC ③: **450 mm TYPE B** (m)	450 mm PP LINER (NPS) (m)	200 mm CSP DOWNDRAIN (2.01 mm) (m)	600 mm HDPE ENERGY DISSIPATOR (EA)	CONCRETED RSP: COBBLE, METHOD B (m^3)	CONCRETED RSP: FACING, METHOD B (m^3)	CONCRETED RSP: RSP FABRIC (m^2)	DESCRIPTION	STATION	DRAINAGE PLAN SHEET No.	DRAINAGE SYSTEM No. ⬡	DRAINAGE UNIT ◯
D-3	16	a																						0.65		6.0	CONCRETED RSP, COBBLE	5.10 Lt "B" 15+6.00	D-3	16	a
		b													1												AFES, 300 mm	5.10 Lt "B" 15+6.00			b
		c															11										CULVERT, 300 mm APC	12.00 Lt "A" 232+19.30			c
		d									GDO	600-12X	1.39	215													TYPE GDO DI	11.60 Lt "A" 232+19.30			d
D-3,4	17	a													1												AFES, 300 mm	14.30 Rt "A" 233+99.30	D-3,4	17	a
		b															7.5										CULVERT, 300 mm APC	15.30 TO 22.40 Rt "A" 233+99.30			b
		c								0.8	GMP	900RX	0.23	98													TYPE GMP DI	22.40 Rt "A" 233+99.30			c
		d																44.0									CULVERT, 375 mm APC	22.40/18.10 Rt "A" 232+99.3/233+44.0			d
		e								0.6	GMP	900RX	0.23	98													TYPE GMP DI	18.10 Rt "A" 233+44.00			e
		f																50.0									CULVERT, 375 mm APC	18.10/16.0 Rt "A" 233+44.00/+95.00			f
		g								1.4	GMP	900RX	0.23	98													TYPE GMP DI	16.00 Rt "A" 233+95.00			g
		h																61.5									CULVERT, 375 mm APC	16.00 Rt "A" 233+95/6 Rt "D" 10+6.00			h
		i									G1	600-12X	1.30	108													TYPE G1 DI	6.75 Rt "D" 10+6.00			i
		j																29.3									CULVERT, 375 mm APC	6.00 Rt "D" 9+75.8 TO 6.75 Rt 10+6.0			j
		k				15.0																					REMOVE 450 mm CSP	0.6/2.3 Rt "A" 234+30.52/234+45.0			k
		l							1																		REMOVE INLET	2.30 Rt "A" 234+45.00			l
		m				21.4																					REMOVE 600 mm CSP	2.3/3.0 Rt "A" 234+45.0/234+66.4			m
		n							1																		REMOVE INLET	3.00 Rt "A" 234+67.00			n
		o	1	7.4																							ABANDON 375 mm CSP	6.0 Rt "D" 9+76/3.0 Rt "A" 234+67.0			o
		p				2.8																					REMOVE 600 mm CSP	3.0/2.8 Rt "A" 234+67.45/234+70.5			p
		q					1																				REMOVE 600 mm FES	2.7 Rt "A" 234+70.5			q
D-4	18	a													1												AFES, 300 mm	6.20 Lt "B" 16+25.80	D-4	18	a
		b			1.86																						CLASS 4 Conc (BACKFILL)	3.00 Lt to 3.00 Rt "B" 16+25.80			b
		c															11										CULVERT, 300 mm APC	"A" 233+38.80 Lt			c
		d									GDO	600-12X	0.97	215													TYPE GDO DI	11.60 Lt "A" 233+38.80			d
SHEET TOTAL			1	7.4	1.86	39.2	1		2	2.8			4.35	832	3		29.5	184.8						0.65		6.0					

③ REVISED PER ADDENDUM No. 3 DATED APRIL 12, 2010

DRAINAGE QUANTITIES
DQ-4

STATE OF CALIFORNIA - DEPARTMENT OF TRANSPORTATION
Caltrans
DESIGN AND ENGINEERING SERVICES
HYDRAULICS

FUNCTIONAL SUPERVISOR: DENNIS R. JAGODA
JAMES M. PHILIPP
CALCULATED-DESIGNED BY
CHECKED BY
REVISED BY
DATE REVISED

LAST REVISION 04-23-08 | DATE PLOTTED => 08-APR-2010 | TIME PLOTTED => 10:26

Dist	COUNTY	ROUTE	KILOMETER POST TOTAL PROJECT	SHEET No.	TOTAL SHEETS
03	Nev	49	15.4/18.0	120	312

REGISTERED CIVIL ENGINEER — DATE 7-31-08

3-23-09
PLANS APPROVAL DATE

REGISTERED PROFESSIONAL ENGINEER — JAMES PHILIPP — No. C59614 — Exp. 12-31-09 — CIVIL — STATE OF CALIFORNIA

THE STATE OF CALIFORNIA OR ITS OFFICERS OR AGENTS SHALL NOT BE RESPONSIBLE FOR THE ACCURACY OR COMPLETENESS OF ELECTRONIC COPIES OF THIS PLAN SHEET.

DRAINAGE QUANTITIES

DRAINAGE PLAN SHEET No.	DRAINAGE SYSTEM No. ⬡	DRAINAGE UNIT ◯	ABANDON CULVERT (EA)	SAND BACKFILL (m^3)	CLASS 4 CONCRETE (BACKFILL) (m^3)	REMOVE CULVERT (m)	REMOVE FES (EA)	REMOVE HEADWALL (EA)	REMOVE INLET (EA)	DRAINAGE INLET: 900 mm CSP INLET (2.77 mm) (m)	DRAINAGE INLET: INLET TYPE (N)	DRAINAGE INLET: FRAME AND GRATE TYPE (N)	MINOR CONCRETE (MINOR STRUCTURE) (m^3)	MISC IRON & STEEL (kg)	AFES: 300 mm (EA)	AFES: 450 mm (EA)	APC 3: 300 mm (m)	APC 3: 375 mm (m)	APC 3: 450 mm TYPE A (m)	APC 3: 450 mm TYPE B (m)	450 mm PP LINER (NPS) (m)	200 mm CSP DOWNDRAIN (2.01 mm) (m)	600 mm HDPE ENERGY DISSIPATOR (EA)	CONCRETED RSP: COBBLE, METHOD B (m^3)	CONCRETED RSP: FACING, METHOD B (m^3)	CONCRETED RSP: RSP FABRIC (m^2)	DESCRIPTION	STATION 3	DRAINAGE PLAN SHEET No.	DRAINAGE SYSTEM No. ⬡	DRAINAGE UNIT ◯
D-4	19	a													1												AFES, 300 mm	**4.30 Lt "B" 16+85.25**	D-4	19	a
		b															8.5										CULVERT, 300 mm APC	**"B" 16+85.25**			b
		c			1.12																						CLASS 4 Conc (BACKFILL)	**3.00 Lt to 3.00 Rt "B" 16+85.25**			c
		d									GDO	600-12X	0.79	215													TYPE GDO DI	**11.50 Lt "A" 233+98.72**			d
D-4	20	a													1												AFES, 300 mm	5.00 Lt "B" 16+96.00	D-4	20	a
		b															20.3										CULVERT, 300 mm	5.00/4.70 Lt "B" 16+96/17+18			b
		c									G1	600-12X	0.80	108													TYPE G1 DI	4.70 Lt "B" 17+18.00			c
		d				18.9																					REMOVE 450 mm CSP	4.90/3.50 Lt "B" 16+97.0/17+16.0			d
		e							1																		REMOVE DI	3.50 Lt "B" 17+16.00			e
D-4	21	a					1																				REMOVE 450 mm FES	0.80 Lt "A" 235+16.00	D-4	21	a
		b																	14.6								CULVERT, 450 mm APC	0.80 Lt/14.60 Rt "A" 235+16/235+17			b
		c			2.87																						CLASS 4 Conc (BACKFILL)	5.00/12.20 Rt "A" 235+17.00			c
		d														1											AFES, 450 mm	14.10 Rt "A" 235+17.00			d
D-5	22	a													1												AFES, 300 mm	4.95 Lt "D" 11+61.00	D-5	22	a
		b															23										CULVERT, 300 mm APC	4.95 Lt/4.63 Rt "D" 11+61/+84.00			b
		c								0.5	GMP	900RX	0.23	98													TYPE GMP DI	4.63 Lt "D" 11+84.00			c
D-5	23	a																							0.97	7.6	CONCRETED RSP, FACING	10.00 Lt "B" 19+06.80	D-5	23	a
		b													1												AFES, 300 mm	10.00 Lt "B" 19+06.80			b
		c															15.5										CULVERT, 300 mm APC	10.00 Lt TO 5.30 Rt "B" 19+6.80			c
		d													1												AFES, 300 mm	5.30 Rt "B" 19+06.80			d
D-5	24	a																							0.97	7.6	CONCRETED RSP, FACING	13.25 Lt "B" 19+76.00	D-5	24	a
		b													1												AFES, 300 mm	13.25 Lt "B" 19+76.00			b
		c															20.0										CULVERT, 300 mm APC	13.25 Lt TO 6.50 Rt "B" 19+76.00			c
		d													1												AFES, 300 mm	6.50 Rt "B" 19+76.00			d
SHEET TOTAL					3.99	18.9	1		1	0.5			1.82	421	7	1	87.3		14.6						1.94	15.2					

3 REVISED PER ADDENDUM No. 3 DATED APRIL 12, 2010

DRAINAGE QUANTITIES
DQ-5

STATE OF CALIFORNIA - DEPARTMENT OF TRANSPORTATION
Caltrans
DESIGN AND ENGINEERING SERVICES
HYDRAULICS

FUNCTIONAL SUPERVISOR: DENNIS R. JAGODA
JAMES M. PHILIPP
CALCULATED-DESIGNED BY
CHECKED BY
REVISED BY
DATE REVISED

LAST REVISION 09-09-08
DATE PLOTTED => 08-APR-2010
TIME PLOTTED => 10:26

Dist	COUNTY	ROUTE	KILOMETER POST TOTAL PROJECT	SHEET No.	TOTAL SHEETS
03	Nev	49	15.4/18.0	121	312

REGISTERED CIVIL ENGINEER — DATE 7-31-08

3-23-09
PLANS APPROVAL DATE

REGISTERED PROFESSIONAL ENGINEER — JAMES PHILIPP — No. C59614 — Exp. 12-31-09 — CIVIL — STATE OF CALIFORNIA

THE STATE OF CALIFORNIA OR ITS OFFICERS OR AGENTS SHALL NOT BE RESPONSIBLE FOR THE ACCURACY OR COMPLETENESS OF ELECTRONIC COPIES OF THIS PLAN SHEET.

DRAINAGE QUANTITIES

DRAINAGE PLAN SHEET No.	DRAINAGE SYSTEM No. ⬡	DRAINAGE UNIT ◯	ABANDON CULVERT	SAND BACKFILL	CLASS 4 CONCRETE (BACKFILL)	REMOVE CULVERT	REMOVE FES	REMOVE HEADWALL	REMOVE INLET	DRAINAGE INLET: 900 mm CSP INLET (2.77 mm)	DRAINAGE INLET: (N) INLET TYPE	DRAINAGE INLET: (N) FRAME AND GRATE TYPE	MINOR CONCRETE (MINOR STRUCTURE)	MISC IRON & STEEL	AFES: 300 mm	AFES: 450 mm	APC ③: 300 mm	APC ③: 375 mm	APC ③: **450 mm TYPE A**	APC ③: **450 mm TYPE B**	450 mm PP LINER (NPS)	200 mm CSP DOWNDRAIN (2.01 mm)	600 mm HDPE ENERGY DISSIPATOR	CONCRETED RSP: COBBLE, METHOD B	CONCRETED RSP: FACING, METHOD B	CONCRETED RSP: RSP FABRIC	DESCRIPTION	STATION ③	DRAINAGE PLAN SHEET No.	DRAINAGE SYSTEM No. ⬡	DRAINAGE UNIT ◯
			EA	m^3	m^3	m	EA	EA	EA	m			m^3	kg	EA	EA	m	m	**m**	**m**	m	m	EA	m^3	m^3	m^2					
D-5	25	a																							0.65	6.0	CONCRETED RSP, COBBLE	7.00 Rt "B" 19+79.00	D-5	25	a
		b													1												AFES, 300 mm	7.00 Rt "B" 19+79.00			b
		c															26.0										CULVERT, 300 mm APC	7.0 Rt/8.0 Rt "B" 20+06.50/19+79.00			c
		d													1												AFES, 300 mm	8.00 Rt "B" 20+06.50			d
D-5	26	a									G1	600-12X	0.35	108													TYPE G1 DI	6.35 Lt "D" 13+00	D-5	26	a
		b															14.5										CULVERT, 300 mm APC	6.35 Lt/8.00 Rt "D" 13+00			b
		c													1												AFES, 300 mm	8.00 Rt "D" 13+00			c
D-5	27	a									G1	600-12X	0.35	108													TYPE G1 DI	**5.50 Lt "D" 13+57.00**	D-5	27	a
		b															12.5										CULVERT, 300 mm	**5.50 Lt/7.00 Rt "D" 13+57.00**			b
		c													1												AFES, 300 mm	**7.00 Rt "D" 13+57.00**			c
D-5	28	a																							2.0	11.50	CONCRETED RSP, FACING	10.10 Lt "B" 20+67.00	D-5	28	a
		b														1											AFES, 450 mm	10.10 Lt "B" 20+67.00			b
		c																	17.0								CULVERT, 450 mm APC	10.0 Lt/6.3 Rt "B" 20+67.0/20+70.70			c
		d														1											AFES, 450 mm	6.30 Rt "B" 20+70.70			d
D-5	29	a													1												AFES, 300 mm	7.27 Rt "B" 20+94.00	D-5	29	a
		b			4.33																						CLASS 4 CONC (BACKFILL)	7.32/7.22 Rt "B" 20+99.00/21+14.21			b
		c															25.5										CULVERT, 300 mm	7.27/6.77 Rt "B" 20+94.00/21+21.00			c
		d													1												AFES, 300 mm	6.77 Rt "B" 21+21.00			d
D-6	30	a													1												AFES, 300 mm	6.24 Lt "D" 14+2.00	D-6	30	a
		b															21										CULVERT, 300 mm	6.24/5.74 Lt "D" 14+2.00/14+23.00			b
		c								0.5	GMP	900RX	0.23	98													TYPE GMP DI	5.74 Lt "D" 14+23.0			c
D-6	31	a													1												AFES, 300 mm	6.00 Rt "B" 22+48.00	D-5	31	a
		b															10										CULVERT, 300 mm APC	6.00/5.62 Rt "B" 22+48.00/22+38.00			b
		c													1												AFES, 300 mm	5.62 Rt "B" 22+38.00			c
SHEET TOTAL					4.33					0.5			0.93	314	9	2	109.5		17.0						2.65	17.50					

③ **REVISED PER ADDENDUM No. 3 DATED APRIL 12, 2010**

DRAINAGE QUANTITIES
DQ-6

STATE OF CALIFORNIA - DEPARTMENT OF TRANSPORTATION
Caltrans
DESIGN AND ENGINEERING SERVICES
HYDRAULICS

FUNCTIONAL SUPERVISOR: DENNIS R. JAGODA

CALCULATED-DESIGNED BY: JAMES M. PHILIPP
CHECKED BY
REVISED BY
DATE REVISED

LAST REVISION 04-23-08 | DATE PLOTTED => 08-APR-2010 | TIME PLOTTED => 10:27

Dist	COUNTY	ROUTE	KILOMETER POST TOTAL PROJECT	SHEET No.	TOTAL SHEETS
03	Nev	49	15.4/18.0	122	312

REGISTERED CIVIL ENGINEER 7-31-08 DATE

3-23-09
PLANS APPROVAL DATE

REGISTERED PROFESSIONAL ENGINEER JAMES PHILIPP No. C59614 Exp. 12-31-09 CIVIL STATE OF CALIFORNIA

THE STATE OF CALIFORNIA OR ITS OFFICERS OR AGENTS SHALL NOT BE RESPONSIBLE FOR THE ACCURACY OR COMPLETENESS OF ELECTRONIC COPIES OF THIS PLAN SHEET.

Caltrans Metric

DRAINAGE QUANTITIES

DRAINAGE PLAN SHEET No.	DRAINAGE SYSTEM No. ⬡	DRAINAGE UNIT ◯	ABANDON CULVERT	SAND BACKFILL	CLASS 4 CONCRETE (BACKFILL)	REMOVE CULVERT	REMOVE FES	REMOVE HEADWALL	REMOVE INLET	DRAINAGE INLET: 900 mm CSP INLET (2.77 mm)	DRAINAGE INLET: (N) INLET TYPE	DRAINAGE INLET: (N) FRAME AND GRATE TYPE	MINOR CONCRETE (MINOR STRUCTURE)	MISC IRON & STEEL	AFES: 300 mm	AFES: 450 mm	APC ▽3: 300 mm	APC ▽3: 375 mm	APC ▽3: **450 mm TYPE A**	APC ▽3: **450 mm TYPE B**	450 mm PP LINER (NPS)	200 mm CSP DOWNDRAIN (2.01 mm)	600 mm HDPE ENERGY DISSIPATOR	CONCRETED RSP: COBBLE, METHOD B	CONCRETED RSP: FACING, METHOD B	CONCRETED RSP: RSP FABRIC	DESCRIPTION	STATION	DRAINAGE PLAN SHEET No.	DRAINAGE SYSTEM No. ⬡	DRAINAGE UNIT ◯
			EA	m^3	m^3	m	EA	EA	EA	m			m^3	kg	EA	EA	m	m	**m**	**m**	m	m	EA	m^3	m^3	m^2					
D-6	32	a				8																					REMOVE 200 mm RCP	15.00 TO 14.6 Rt "A" 239+33/+41	D-6	32	a
D-6	33	a				23																					REMOVE 450 mm CSP	13.70 m Lt/9.0 Rt "A" 239+44.30	D-6	33	a
D-6	34	a														1											AFES, 450 mm	4.75 Lt "B" 23+33.00	D-6	34	a
		b																	11								CULVERT, 450 mm APC	11.75 Lt "A" 239+74.60			b
		c									GDO	600-12X	1.37	215													TYPE GDO DI	11.75 Lt "A" 239+74.60			c
		d																	25.5								CULVERT, 450 mm APC	11.75 Lt/14.50 Rt "A" 239+74.6			d
		e								0.75	GMP	900RX	0.23	98													TYPE GMP DI	14.50 Rt "A" 239+74.60			e
D-6	35	a				23.5																					REMOVE 300 mm CSP	0.60 Rt/1.70 Lt "B" 23+53.70/+77.15	D-6	35	a
D-6	36	a														1											AFES, 450 mm	6.70 Lt "B" 23+35.00	D-6	36	a
		b																	30.0								CULVERT, 450 mm APC	6.70 Lt/6.40 Lt "B" 23+35.0/23+75.0			b
		c														1											AFES, 450 mm	6.40 Lt "B" 23+75.00			c
D-6	37	a														1											AFES, 450 mm	6.20 Lt "B" 24+19.60	D-6	37	a
		b																	11								CULVERT, 450 mm APC	11.50 Lt "A" 240+62.00			b
		c									GDO	600-12X	1.45	215													TYPE GDO DI	11.50 Lt "A" 240+62.00			c
D-6	38	a																						1.34		9.5	CONCRETED RSP, COBBLE	16.00 Lt "B" 24+96.87	D-6	38	a
		b														1											AFES, 450 mm	16.00 Lt "B" 24+96.87			b
		c																	21								CULVERT, 450 mm APC	11.50 Lt "A" 241+40.00			c
		d									GDO	600-12X	1.37	215													TYPE GDO DI	11.50 Lt "A" 241+40.00			d
D-7	39	a									GDO	600-12X	1.29	215													TYPE GDO DI	11.50 Lt "A" 241+98.80	D-7	39	a
		b																	26.5								CULVERT, 450 mm APC	11.50 Lt /15.30 Rt "A" 241+98.80			b
		c											0.68	22													HW, 450 mm	15.30 Rt "A" 241+98.80			c
SHEET TOTAL						54.5				0.75			6.39	980		5			125.0					1.34		9.5					

▽3 **REVISED PER ADDENDUM No. 3 DATED APRIL 12, 2010**

DRAINAGE QUANTITIES
DQ-7

STATE OF CALIFORNIA - DEPARTMENT OF TRANSPORTATION
Caltrans
DESIGN AND ENGINEERING SERVICES
HYDRAULICS

FUNCTIONAL SUPERVISOR: DENNIS R. JAGODA

CALCULATED-DESIGNED BY: JAMES M. PHILIPP
CHECKED BY
REVISED BY
DATE REVISED

LAST REVISION 04-23-08
DATE PLOTTED => 08-APR-2010
TIME PLOTTED => 10:27

Dist	COUNTY	ROUTE	KILOMETER POST TOTAL PROJECT	SHEET No.	TOTAL SHEETS
03	Nev	49	15.4/18.0	123	312

REGISTERED CIVIL ENGINEER — DATE 7-31-08

3-23-09
PLANS APPROVAL DATE

REGISTERED PROFESSIONAL ENGINEER — JAMES PHILIPP — No. C59614 — Exp. 12-31-09 — CIVIL — STATE OF CALIFORNIA

THE STATE OF CALIFORNIA OR ITS OFFICERS OR AGENTS SHALL NOT BE RESPONSIBLE FOR THE ACCURACY OR COMPLETENESS OF ELECTRONIC COPIES OF THIS PLAN SHEET.

Caltrans Metric

DRAINAGE QUANTITIES

DRAINAGE PLAN SHEET No.	DRAINAGE SYSTEM No. ⬡	DRAINAGE UNIT ◯	ABANDON CULVERT (EA)	SAND BACKFILL (m^3)	CLASS 4 CONCRETE (BACKFILL) (m^3)	REMOVE CULVERT (m)	REMOVE FES (EA)	REMOVE HEADWALL (EA)	REMOVE INLET (EA)	DRAINAGE INLET: 900 mm CSP INLET (2.77 mm) (m)	DRAINAGE INLET: (N) INLET TYPE	DRAINAGE INLET: (N) FRAME AND GRATE TYPE	MINOR CONCRETE (MINOR STRUCTURE) (m^3)	MISC IRON & STEEL (kg)	AFES: 300 mm (EA)	AFES: 450 mm (EA)	APC 3: 300 mm (m)	APC 3: 375 mm (m)	APC 3: **450 mm TYPE A (m)**	APC 3: **450 mm TYPE A (m)**	450 mm PP LINER (NPS) (m)	200 mm CSP DOWNDRAIN (2.01 mm) (m)	600 mm HDPE ENERGY DISSIPATOR (EA)	CONCRETED RSP: COBBLE, METHOD B (m^3)	CONCRETED RSP: FACING, METHOD B (m^3)	CONCRETED RSP: RSP FABRIC (m^2)	DESCRIPTION	STATION	DRAINAGE PLAN SHEET No.	DRAINAGE SYSTEM No. ⬡	DRAINAGE UNIT ◯
D-7	40	a																						1.34		9.5	CONCRETED RSP, COBBLE	19.10 Lt "B" 25+77.00	D-7	40	a
		b											1.50	30													THRUST BLOCK	18.20 TO 19.10 Lt "B" 25+77.00			b
		c				2.5																					REMOVE, 600 mm CSP	16.30 TO 18.75 Lt "B" 25+77.00			c
		d																					1				HDPE ENERGY DISSIPATER	16.40 TO 19.10 Lt "B" 25+77.00			d
		e																			27.9						450 mm PP LINER (NPS)	17.10 "B" 25+77/15.20 "A" 242+19.65			e
		f						1																			REMOVE HW	6.50 Lt "A" 242+19.65			f
		g																		**22**							CULVERT, 450 mm APC	6.50 Lt TO 15.20 Rt "A" 242+19.65			g
		h											0.68	22													HW, 450 mm	15.20 Rt "A" 242+19.65			h
D-7	41	a																						0.65		6.0	CONCRETED RSP, COBBLE	10.60 Lt "B" 26+40.00	D-7	41	a
		b													1												AFES, 300 mm	10.60 Lt "B" 26+40.00			b
		c																	15								CULVERT, 300 mm APC	10.60 "B" 26+40/11.5 "A" 242+84.50			c
		d									GDO	600-12X	1.29	215													TYPE GDO DI	11.50 Lt "A" 242+84.50			d
D-7	42	a								1.2	GMP	900RX	0.23	98													TYPE GMP DI	27.80 Lt "A" 244+75.00	D-7	42	a
		b																				18.3					200 mm CSP w/DD JOINT	11.40/27.80 Lt "A" 244+75.00			b
D-7	43	a				0.6																					REMOVE, 450 mm CSP	31.70 Lt "A" 244+86.00	D-7	43	a
		b				5.6																					REMOVE, 450 mm CSP	28.85/30.60 Lt "A" 244+82.00/86.00			b
		c																						1.34		9.5	CONCRETED RSP, COBBLE	30.30 Lt "A" 244+87.00			c
		d											1.50	30													THRUST BLOCK	29.40 TO 30.30 Lt "A" 244+87.00			d
		e				2.6																					REMOVE, 600 mm CSP	27.20 TO 29.80 Lt "A" 244+87.00			e
		f																					1				HDPE ENERGY DISSIPATER	27.60 TO 30.30 Lt "A" 244+87.00			f
		g																			38						450 mm PP LINER (NPS)	28.00 Lt/9.00 Rt "A" 244+87.00			g
		h						1																			REMOVE HW	9.00 Rt "A" 244+87.00			h
		i																		**13**							CULVERT, 450 mm APC	9.00 TO 22.10 Rt "A" 244+87.00			i
		j											0.68	22													HW, 450 mm	22.10 Rt "A" 244+87.00			j
SHEET TOTAL						11.3		2		1.2			5.88	417	1				**15**	**35**	65.9	18.3	2	3.33		25.0					

3 **REVISED PER ADDENDUM No. 3 DATED APRIL 12, 2010**

DRAINAGE QUANTITIES
DQ-8

STATE OF CALIFORNIA - DEPARTMENT OF TRANSPORTATION
DESIGN AND ENGINEERING SERVICES
HYDRAULICS
Caltrans

FUNCTIONAL SUPERVISOR: DENNIS R. JAGODA
CALCULATED-DESIGNED BY: JAMES M. PHILIPP
CHECKED BY
REVISED BY
DATE REVISED

LAST REVISION 04-23-08
DATE PLOTTED => 08-APR-2010
TIME PLOTTED => 10:27

Dist	COUNTY	ROUTE	KILOMETER POST TOTAL PROJECT	SHEET No.	TOTAL SHEETS
03	Nev	49	15.4/18.0	124	312

REGISTERED CIVIL ENGINEER 7-31-08 DATE

3-23-09
PLANS APPROVAL DATE

REGISTERED PROFESSIONAL ENGINEER JAMES PHILIPP No. C59614 Exp. 12-31-09 CIVIL STATE OF CALIFORNIA

THE STATE OF CALIFORNIA OR ITS OFFICERS OR AGENTS SHALL NOT BE RESPONSIBLE FOR THE ACCURACY OR COMPLETENESS OF ELECTRONIC COPIES OF THIS PLAN SHEET.

Caltrans Metric

DRAINAGE ITEMS

DRAINAGE PLAN SHEET No.	DRAINAGE SYSTEM No. ⬡	DRAINAGE UNIT ◯	ABANDON CULVERT	SAND BACKFILL	CLASS 4 CONCRET (BACKFILL)	REMOVE CULVERT	REMOVE FES	REMOVE HEADWALL	REMOVE INLET	DRAINAGE INLET: 900 mm CSP INLET (2.77 mm)	DRAINAGE INLET: INLET TYPE (N)	DRAINAGE INLET: FRAME AND GRATE TYPE (N)	MINOR CONCRETE (MINOR STRUCTURE)	MISC IRON & STEEL	AFES: 300 mm	AFES: 450 mm	APC 3: 300 mm	APC 3: 375 mm	APC 3: 450 mm TYPE A	APC 3: 450 mm TYPE B	450 mm PP LINER (NPS)	200 mm CSP DOWNDRAIN (2.01 mm)	600 mm HDPE ENERGY DISSIPATOR	CONCRETED RSP: COBBLE, METHOD B	CONCRETED RSP: FACING, METHOD B	CONCRETED RSP: RSP FABRIC	DESCRIPTION	STATION	DRAINAGE PLAN SHEET No.	DRAINAGE SYSTEM No. ⬡	DRAINAGE UNIT ◯
			EA	m^3	m^3	m	EA	EA	EA	m			m^3	kg	EA	EA	m	m	**m**	**m**	m	m	EA	m^3	m^3	m^2					
D-8	44	a																							2.0	7.6	CONCRETED RSP, FACING	18.50 Lt "A" 246+23.80	D-8	44	a
		b											1.50	20													THRUST BLOCK	17.60/18.50 Lt "A" 246+23.80			b
		c				2.0																					REMOVE, 600 mm CSP	16.10/18.50 Lt "A" 246+23.80			c
		d																					1				HDPE ENERGY DISSIPATER	17.50 TO 19.50 Lt "A" 246+23.80			d
		e																			27.7						450 mm PP LINER (NPS)	16.40 Lt/11.00 Rt "A" 246+23.80			e
		f						1																			REMOVE HW	11.00 Rt "A" 246+23.80			f
		g																		**6.2**							CULVERT, 450 mm APC	11.00 TO 17.20 Rt "A" 246+23.80			g
		h											0.68	22													HW, 450 mm	17.20 Rt "A" 246+23.80			h
SHEET TOTAL						2.0		1					2.18	42						**6.2**	27.7		1		2.0	7.6					

3

SHEET TOTAL																										
DQ-1				49	2			1			1.31	315	5		49.0							18.60		90.0
DQ-2	2	4.2		6.0	1	3		4.5			0.99	214	2	2	34.5		**21**	**12**	36.5	16.2		1.99	2.0	21.2
DQ-3	1	7.3		53.1	1		1				5.29	791			23.7		124					1.65		8.7
DQ-4	1	7.4	1.86	39.2	1		2	2.8			4.35	832	3		29.5	184.8						0.65		6.0
DQ-5			3.99	18.9	1		1	0.5			1.82	421	7	1	87.3		14.6						1.94	15.2
DQ-6			4.33					0.5			0.93	314	9	2	109.5		17.0						2.65	17.50
DQ-7				54.5				0.75			6.39	980		5			125					1.34		9.5
DQ-8				11.3		2		1.2			5.88	417	1				**15**	**35**	65.9	18.3	2	3.33		25.0
DQ-9				2.0		1					2.18	42						**6.2**	27.7		1		2.0	7.6
TOTAL	4	18.9	10.18	234	6	6	4	11.25			29.1	4326	27	10	333.5	184.8	**316.6**	**53.2**	130.1	34.5	3	27.56	8.59	200.7

(N) - NOT A SEPARATE PAY ITEM, FOR INFORMATION ONLY.

3 **REVISED PER ADDENDUM No. 3 DATED APRIL 12, 2010**

THIS PLAN ACCURATE FOR DRAINAGE WORK ONLY

DRAINAGE QUANTITIES
DQ-9

STATE OF CALIFORNIA - DEPARTMENT OF TRANSPORTATION
Caltrans DESIGN AND ENGINEERING SERVICES HYDRAULICS

FUNCTIONAL SUPERVISOR: DENNIS R. JAGODA
CALCULATED-DESIGNED BY: JAMES M. PHILIPP
CHECKED BY
REVISED BY
DATE REVISED

LAST REVISION 07-31-08 DATE PLOTTED => 08-APR-2010 TIME PLOTTED => 10:27

Dist	COUNTY	ROUTE	KILOMETER POST TOTAL PROJECT	SHEET No.	TOTAL SHEETS
03	Nev	49	15.4/18.0	134	312

REGISTERED CIVIL ENGINEER 10-29-08 DATE

03-23-09
PLANS APPROVAL DATE

REGISTERED PROFESSIONAL ENGINEER ARSHAD IQBAL No. C62831 Exp. 6-30-10 CIVIL STATE OF CALIFORNIA

THE STATE OF CALIFORNIA OR ITS OFFICERS OR AGENTS SHALL NOT BE RESPONSIBLE FOR THE ACCURACY OR COMPLETENESS OF ELECTRONIC COPIES OF THIS PLAN SHEET.

Caltrans Metric

NOTES:

1. INDEX NOTES DO NOT REPRESENT AN ORDER OF WORK AS INDICATED.
2. SAW CUTTING OF EXISTING PAVEMENT MAY NEED TO BE COMPLETED PRIOR TO PLACEMENT OF TEMPORARY RAILING (TYPE K).
3. LOCATIONS WITH NO IMPACT TO THE EXISTING TRAFFIC MUST BE COMPLETED FIRST.
4. CONTRACTOR SHALL PROVIDE TEMPORARY PUBLIC ACCESS TO DRIVEWAYS AND ROADWAY CONNECTIONS THROUGH WORK AT ALL TIMES.
5. TEMPORARY RAILING (TYPE K) END TAPER 1:10 OR FLATTER. EXPOSED END OF TEMPORARY RAILING (TYPE K) SHOWN BELOW IS 4.6 METER MINIMUM FROM APPROACH ETW.
6. EXCEPTION: AS DETERMINED BY THE RESIDENT ENGINEER, EMBANKMENT CAN BE CONSTRUCTED ANYTIME UP TO SUBGRADE OF AB OR EXISTING HINGE POINT ELEVATION (WHICHEVER IS LOWER) AND GRADED SO THAT STORM WATER SHEETS AWAY FROM TRAFFIC.
7. ALL CHANNELZIERS (SURFACE MOUNTED) SHALL BE INSTALLED ON 15 METER CENTERS UNLESS OTHERWISE SHOWN
8. ALL TRAFFIC PLASTIC DRUMS SHALL BE INSTALLED ON 15 METER CENTERS UNLESS OTHERWISE SHOWN
9. FOR ADDITIONAL CONSTRUCTION AREA SIGNS, SEE SHEETS CS-1 AND TRAFFIC HANDLING PLANS
10. ALL SIGN CODES SHOWN ARE FEDERAL SIGN CODES UNLESS OTHERWISE DESIGNATED AS CALIFORNIA CODES

LEGEND:

	CONSTRUCTION THIS STAGE
	TEMPORARY ACCESS ROAD
No X	PAVEMENT DELINEATOR DETAIL NUMBER P=PAINT
LL X	LIMIT LINE P=TPMP
RPM	REMOVE PAVEMENT MARKING
TPMP	TEMPORARY PAVEMENT MARKING (PAINT)
S	"STOP" PAVEMENT MARKING
⇨	DIRECTION OF TRAFFIC THIS STAGE
++	TYPE III BARRICADE
(X)	CONSTRUCTION AREA SIGN LETTER
No	ROADSIDE SIGN NUMBER
*	RELOCATE ROADSIDE SIGN
**	RELOCATE CONSTRUCTION AREA SIGN
▲	RESET ROADSIDE SIGN
▲▲	RESET CONSTRUCTION AREA SIGN
■	REMOVE ROADSIDE SIGN
■■	REMOVE CONSTRUCTION AREA SIGN
•	CHANNELIZER (SURFACE MOUNTED)
W/FB	WITH FLASHING BEACONS
	SIGN-SINGLE POST
	SIGN-TWO POST
<CA>	CALIFORNIA SIGN CODE
	Type III ARROW
	Type V ARROW
	Type VI ARROW
	Type IV ARROW
	TRAFFIC PLASTIC DRUMS
	TEMPORARY CRASH CUSHIONS
	TEMPORARY RAILING (TYPE K)
	TEMPORARY CRASH CUSHION (TYPE ABSORB 350)

MAJOR WORK CATEGORIES STAGE 1

DRAINAGE
DEER UNDERCROSSING (EAST SIDE)
SOUNDWALL No. 2
"A" LINE WIDENING
"B" LINE CONSTRUCTION
"C" LINE CONSTRUCTION
"D" LINE CONSTRUCTION

STAGE 1

THE INTENT OF THIS STAGE IS TO CONSTRUCT EAST SIDE OF HIGHWAY WITH NO IMPACT TO EXISTING TRAFFIC CONDITIONS, CONSTRUCT "D" LINE AND PORTION OF "B" LINE, AND "C" LINE.

STAGE 1 CONSTRUCTION (WORK TO BE PERFORMED):

"A" LINE (ROUTE 49)

(A1) PLACE TEMPORARY RAILING (TYPE K), AND TEMPORARY CRASH CUSHIONS (ARRAYS TS14)
(A2) CONSTRUCT ALL UNITS OF DRAINAGE SYSTEM 2, 3, 9, 10, 13, 15, 17 AND 31
(A3) PARTIALLY CONSTRUCT DRAINAGE SYSTEMS 7, 14, 39, 40, 43 AND 44
(A4) CONSTRUCT DEER UNDERCROSSING (EAST SIDE)
(A5) CONSTRUCT MBGR
(A6) BEGIN WIDENING, STATION "A" 225+41 TO 233+60, 235+20 TO 238+30, AND 240+60 TO 246+80
(A7) REMOVE MBGR (SEE LAYOUTS)
(A8) CONSTRUCT SOUNDWALL No. 2
(A9) CONSTRUCT LADY JANE ROAD AND DRIVEWAYS CONNECTION.

STAGE 1 CONSTRUCTION (WORK TO BE PERFORMED):

"B" LINE (WEST FRONTAGE ROAD)

(B1) CONSTRUCT "B" LINE 18+00 TO ~~22+55~~ 23+00 (3)
(B2) CONSTRUCT ALL UNITS OF DRAINAGE SYSTEMS 23, 24, 25, 29 AND 31
(B3) CONSTRUCT DRIVEWAYS (SEE CONSTRUCTION DETAILS)

"C" LINE (CROSSING ROAD)

(C1) CONSTRUCT "C" LINE 10+00 TO 11+05 AND 11+75 TO 12+80
(C2) CONSTRUCT DRIVEWAYS (SEE CONSTRUCTION DETAILS)

"D" LINE (EAST FRONTAGE ROAD)

(D1) CONSTRUCT "D" LINE 9+86 TO 16+89
(D2) CONSTRUCT ALL UNITS OF DRAINAGE SYSTEMS 22, 26, 27, 30 AND 32
(D3) CONSTRUCT DRIVEWAYS (SEE CONSTRUCTION DETAILS)

(3) **REVISED PER ADDENDUM No. 3 DATED APRIL 12, 2010**

INDEX SHEET
STAGE CONSTRUCTION AND TRAFFIC HANDLING PLAN
SC-1

REVISED BY	DATE REVISED

CALCULATED-DESIGNED BY: N. SELWAL
CHECKED BY: A. IQBAL
FUNCTIONAL SUPERVISOR: M. ALVANDI

STATE OF CALIFORNIA - DEPARTMENT OF TRANSPORTATION
SOUTH REGION
OFFICE OF DESIGN, SOUTH
DESIGN BRANCH S16
Caltrans

LAST REVISION: DATE PLOTTED => 08-APR-2010 TIME PLOTTED => 10:27

Dist	COUNTY	ROUTE	KILOMETER POST TOTAL PROJECT	SHEET No.	TOTAL SHEETS
03	Nev	49	15.4/18.0	135	312

REGISTERED CIVIL ENGINEER 10-29-08 DATE

03-23-09
PLANS APPROVAL DATE

REGISTERED PROFESSIONAL ENGINEER ARSHAD IQBAL No. C62831 Exp. 6-30-10 CIVIL STATE OF CALIFORNIA

THE STATE OF CALIFORNIA OR ITS OFFICERS OR AGENTS SHALL NOT BE RESPONSIBLE FOR THE ACCURACY OR COMPLETENESS OF ELECTRONIC COPIES OF THIS PLAN SHEET.

Caltrans Metric

3

STAGE 2

THE INTENT OF THIS STAGE IS TO CONSTRUCT EAST SIDE OF HIGHWAY BETWEEN STAGE 1 AND EXISTING EDGE OF PAVEMENT

MAJOR WORK CATEGORIES STAGE 2

DRAINAGE
"A" LINE WIDENING
"B" LINE CONSTRUCTION

STAGE 2 CONSTRUCTION (WORK TO BE PERFORMED):

"A" LINE (ROUTE 49)

(A1) PLACE TEMPORARY RAILING (TYPE K) AS SHOWN
(A2) CONSTRUCT ALL UNITS OF DRAINAGE SYSTEM 1, 21 AND PARTIALLY CONSTRUCT DRAINAGE SYSTEM 34
(A3) BEGIN WIDENING, STATION "A" 225+41 TO 228+10, 228+60 TO 236+80 AND 238+30 TO 243+80
(A4) PLACE TEMP STRIPING ON "A" LINE
(A5) BEGIN TRAFFIC ELECTRICAL SYSTEMS AT NEW INTERSECTION
(A6) BEGIN LANDSCAPING ITEMS

"B" LINE (WEST FRONTAGE ROAD)

(B1) CONSTRUCT "B" LINE 9+90 TO 13+00
(B2) CONSTRUCT ALL UNITS OF DRAINAGE SYSTEMS 4, 5, 6 AND 8
(B3) CONSTRUCT DRIVEWAYS (SEE CONSTRUCTION DETAILS)

"C" LINE (CROSSING ROAD)

(C1) PLACE TEMP STRIPING ON "C" LINE

"D" LINE (EAST FRONTAGE ROAD)

(D1) PLACE TEMP STRIPING ON "D" LINE

STAGE 3

THE INTENT OF THIS STAGE IS TO CONSTRUCT WEST SIDE OF HIGHWAY AND COMPLETE "B" LINE CONSTRUCTION

MAJOR WORK CATEGORIES STAGE 3

DRAINAGE
DEER UNDERCROSSING (WEST SIDE)
"A" LINE WIDENING AND OVERLAY
"B" LINE CONSTRUCTION
COMPLETE TRAFFIC SIGNAL

STAGE 3 CONSTRUCTION (WORK TO BE PERFORMED):

"A" LINE (ROUTE 49)

(A1) PLACE TEMPORARY RAILING (TYPE K) AS SHOWN
(A2) CONSTRUCT ALL UNITS OF DRAINAGE SYSTEM 33, 35 AND 42
(A3) CONSTRUCT REMAINING UNITS OF DRAINAGE SYSTEM 14, 34, 39, 40, 43 AND 44
(A4) CONSTRUCT DEER UNDERCROSSING (WEST SIDE)
(A5) CONSTRUCT MBGR
(A6) BEGIN LEVELING AND OVERLAY
(A7) PLACE TEMP STRIPING ON "A" LINE
(A8) PLACE FINAL LIFT OF HMA-A
(A9) PLACE FINAL STRIPING ON "A" LINE
(A10) COMPLETE TRAFFIC ELECRICAL SYSTEM

"B" LINE (WEST FRONTAGE ROAD)

(B1) CONSTRUCT "B" LINE 13+00 TO 18+00 AND 22+55 TO 26+76
(B2) CONSTRUCT ALL UNITS OF DRAINAGE SYSTEMS 12, 16, 18, 19, 20, 36, 37 38 AND 41
(B3) CONSTRUCT DRIVEWAYS (SEE CONSTRUCTION DETAILS)
(B4) CONSTRUCT MBGR

"C" LINE (CROSSING ROAD)

(C1) PLACE TEMP STRIPING ON "C" LINE

STAGE 4

THE INTENT OF THIS STAGE IS TO CONSTRUCT SOUNDWALLS, CONCRETE BARRIER, AND FACILITATE COMPLETION OF CONSTRUCTION

MAJOR WORK CATEGORIES STAGE 4

"A" LINE OVERLAY
SOUNDWALL No. 1 AND No. 3
CONCRETE BARRIER

STAGE 4 CONSTRUCTION (WORK TO BE PERFORMED):

"A" LINE (ROUTE 49)

(A1) CONSTRUCT SOUNDWALL No. 1 AND No. 3
(A2) CONSTRUCT CONCRETE BARRIER
(A3) PLACE FINAL LIFT OF RHMA-O
(A4) PLACE FINAL SIGNING AND STRIPING ON "A" LINE (SEE PAVEMENTS DELINEATION AND SIGN PLANS)
(A5) COMPLETE LANDSCAPING ITEMS

"B" LINE (WEST FRONTAGE ROAD)

(B1) PLACE FINAL SIGNING AND STRIPING ON "B" LINE (SEE PAVEMENTS DELINEATION AND SIGN PLANS)
(B2) CONSTRUCT MBGR (TYPE 11A LAYOUT)
CONSTRUCT END TREATMENT (TYPE ET)

"C" LINE (CROSSING ROAD)

(C1) PLACE FINAL SIGNING AND STRIPING ON "C" LINE (SEE PAVEMENTS DELINEATION AND SIGN PLANS)

"D" LINE (EAST FRONTAGE ROAD)

(D1) PLACE FINAL SIGNING AND STRIPING ON "D" LINE (SEE PAVEMENTS DELINEATION AND SIGN PLANS)

3 **REVISED PER ADDENDUM No. 3 DATED APRIL 12, 2010**

INDEX SHEET
STAGE CONSTRUCTION AND TRAFFIC HANDLING PLAN
SC-2

REVISED BY | DATE REVISED
N. SELWAL | A. IQBAL
CALCULATED-DESIGNED BY | CHECKED BY
FUNCTIONAL SUPERVISOR
M. ALVANDI

STATE OF CALIFORNIA - DEPARTMENT OF TRANSPORTATION
SOUTH REGION
OFFICE OF DESIGN SOUTH
DESIGN BRANCH S16
Caltrans

LAST REVISION | DATE PLOTTED => 08-APR-2010 | TIME PLOTTED => 10:27

Dist	COUNTY	ROUTE	KILOMETER POST TOTAL PROJECT	SHEET No.	TOTAL SHEETS
03	Nev	49	15.4/18.0	141	312

REGISTERED CIVIL ENGINEER 10-29-08 DATE

3-23-09
PLANS APPROVAL DATE

REGISTERED PROFESSIONAL ENGINEER ARSHAD IQBAL No. C62831 Exp. 6-30-10 CIVIL STATE OF CALIFORNIA

THE STATE OF CALIFORNIA OR ITS OFFICERS OR AGENTS SHALL NOT BE RESPONSIBLE FOR THE ACCURACY OR COMPLETENESS OF ELECTRONIC COPIES OF THIS PLAN SHEET.

Caltrans Metric

NOTE: COMPLETE WIDENING BEHIND Temp RAILING (TYPE K) THEN REMOVE Temp RAILING (TYPE K) AND UNDER TRAFFIC CONTROL MATCH HMA TO EXISTING PAVEMENT AND OPEN EAST OF "C LINE" AND "D LINE" FOR TRAFFIC AFTER PLACING TEMPORARY STRIPING.

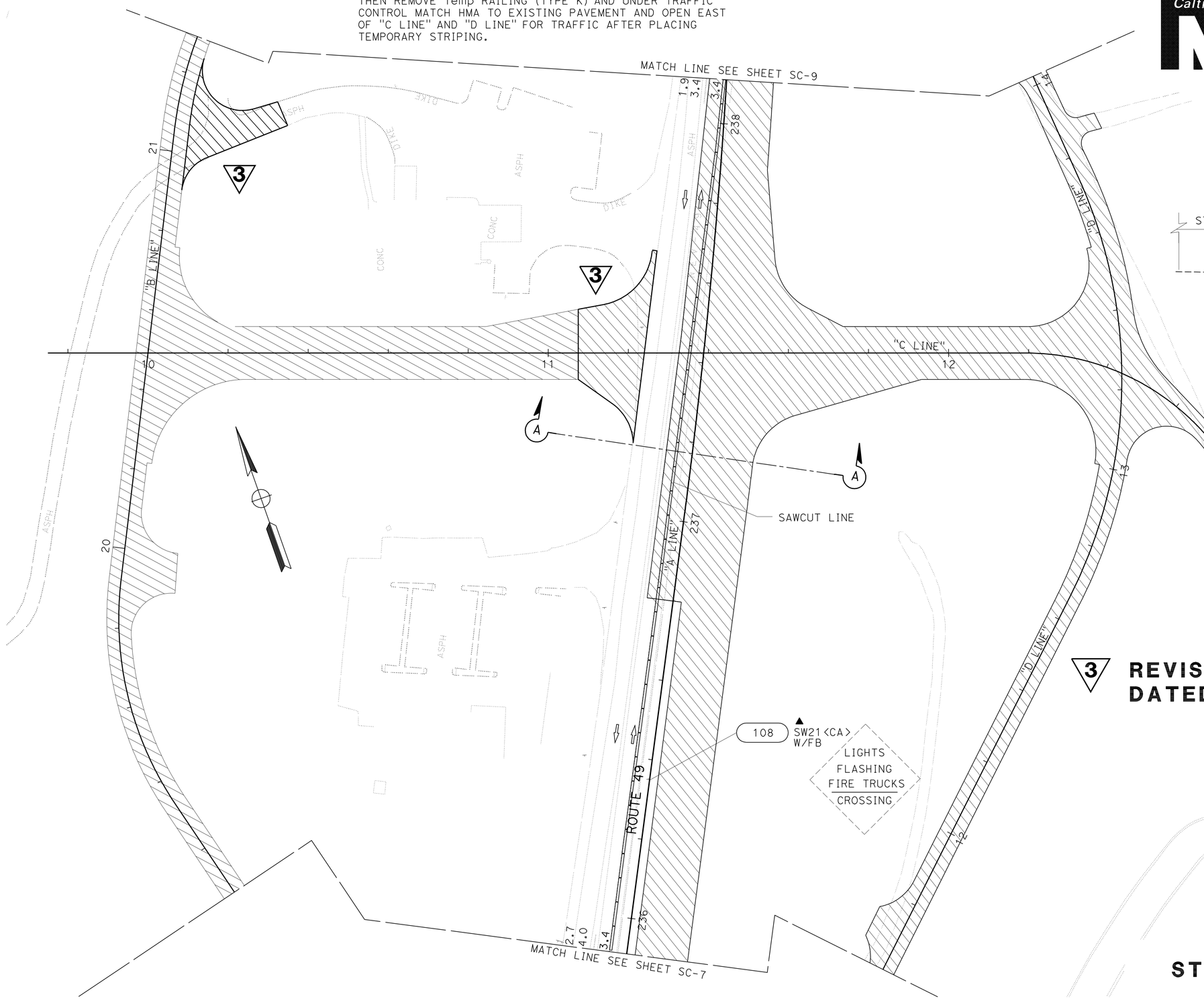

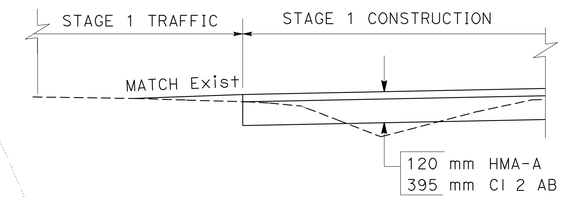

"A" 236+80.00 TO 238+30.00
(SEE NOTE THIS SHEET)

SECTION A-A
NO SCALE

3 REVISED PER ADDENDUM No. 3 DATED APRIL 12, 2010

ALL DIMENSIONS ARE IN METERS UNLESS OTHERWISE SHOWN

STAGE 1

STAGE CONSTRUCTION AND TRAFFIC HANDLING PLAN

SCALE 1:500 **SC-8**

THIS PLAN ACCURATE FOR STAGE CONSTRUCTION AND TRAFFIC HANDLING WORK ONLY.

STATE OF CALIFORNIA - DEPARTMENT OF TRANSPORTATION
SOUTH REGION
OFFICE OF DESIGN, SOUTH
DESIGN BRANCH S16

Caltrans

FUNCTIONAL SUPERVISOR: M. ALVANDI
CALCULATED-DESIGNED BY: N. SELWAL
CHECKED BY: A. IQBAL
REVISED BY / DATE REVISED

LAST REVISION: DATE PLOTTED => 08-APR-2010 TIME PLOTTED => 10:27

Dist	COUNTY	ROUTE	KILOMETER POST TOTAL PROJECT	SHEET No.	TOTAL SHEETS
03	Nev	49	15.4/18.0	142	312

REGISTERED CIVIL ENGINEER 10-29-08 DATE

3-23-09
PLANS APPROVAL DATE

REGISTERED PROFESSIONAL ENGINEER ARSHAD IQBAL No. C62831 Exp. 6-30-10 CIVIL STATE OF CALIFORNIA

THE STATE OF CALIFORNIA OR ITS OFFICERS OR AGENTS SHALL NOT BE RESPONSIBLE FOR THE ACCURACY OR COMPLETENESS OF ELECTRONIC COPIES OF THIS PLAN SHEET.

Caltrans Metric

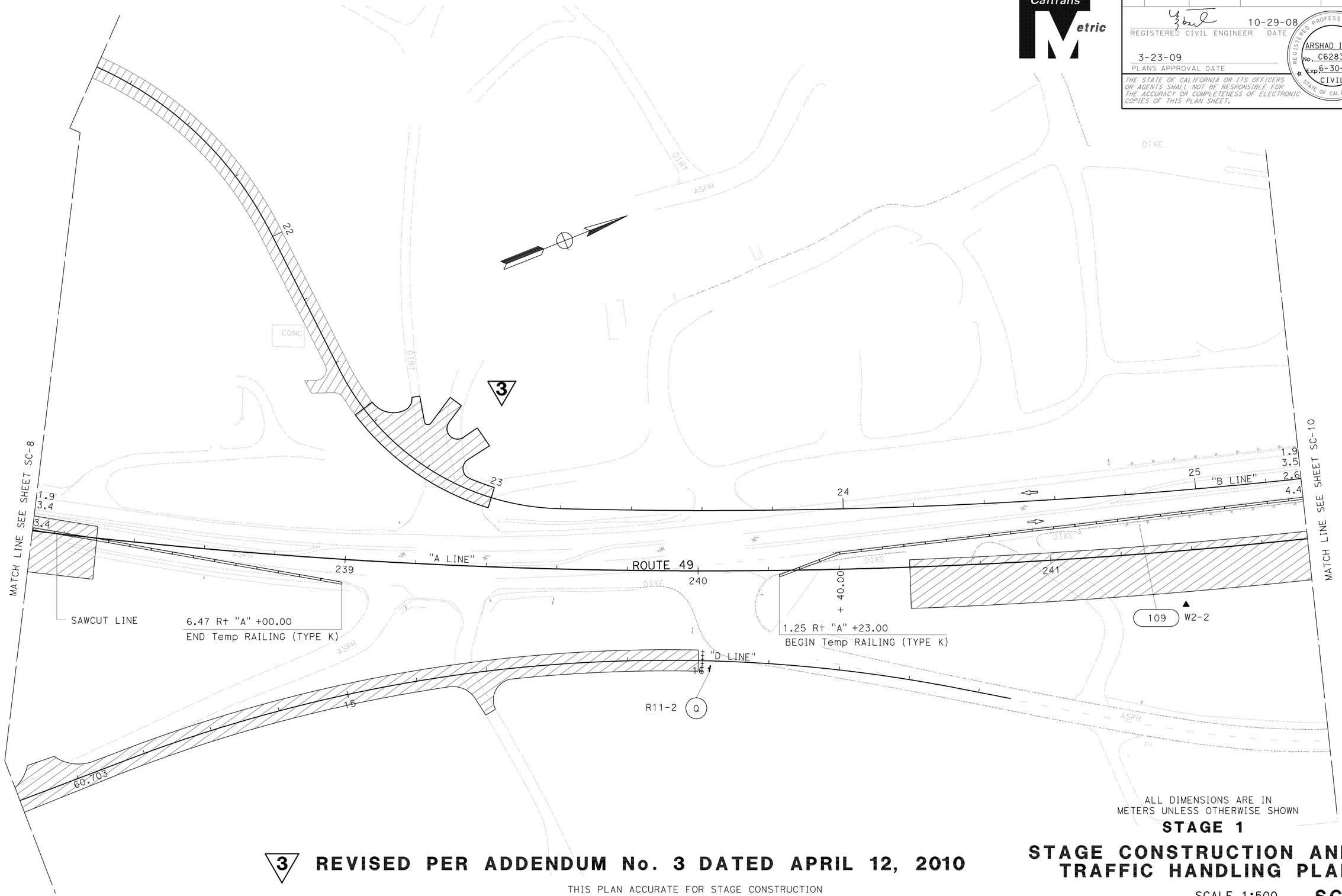

ALL DIMENSIONS ARE IN METERS UNLESS OTHERWISE SHOWN

STAGE 1

STAGE CONSTRUCTION AND TRAFFIC HANDLING PLAN

SCALE 1:500 **SC-9**

3 **REVISED PER ADDENDUM No. 3 DATED APRIL 12, 2010**

THIS PLAN ACCURATE FOR STAGE CONSTRUCTION AND TRAFFIC HANDLING WORK ONLY.

CALCULATED-DESIGNED BY	N. SELWAL
CHECKED BY	A. IQBAL
FUNCTIONAL SUPERVISOR	M. ALVANDI
REVISED BY	
DATE REVISED	

STATE OF CALIFORNIA - DEPARTMENT OF TRANSPORTATION
SOUTH REGION
OFFICE OF DESIGN SOUTH
DESIGN BRANCH S16
Caltrans

LAST REVISION DATE PLOTTED => 08-APR-2010
TIME PLOTTED => 10:27

Dist	COUNTY	ROUTE	KILOMETER POST TOTAL PROJECT	SHEET No.	TOTAL SHEETS
03	Nev	49	15.4/18.0	150	312

REGISTERED CIVIL ENGINEER 10-29-08 DATE

3-23-09
PLANS APPROVAL DATE

REGISTERED PROFESSIONAL ENGINEER ARSHAD IQBAL No. C62831 Exp. 6-30-10 CIVIL STATE OF CALIFORNIA

THE STATE OF CALIFORNIA OR ITS OFFICERS OR AGENTS SHALL NOT BE RESPONSIBLE FOR THE ACCURACY OR COMPLETENESS OF ELECTRONIC COPIES OF THIS PLAN SHEET.

Caltrans Metric

3

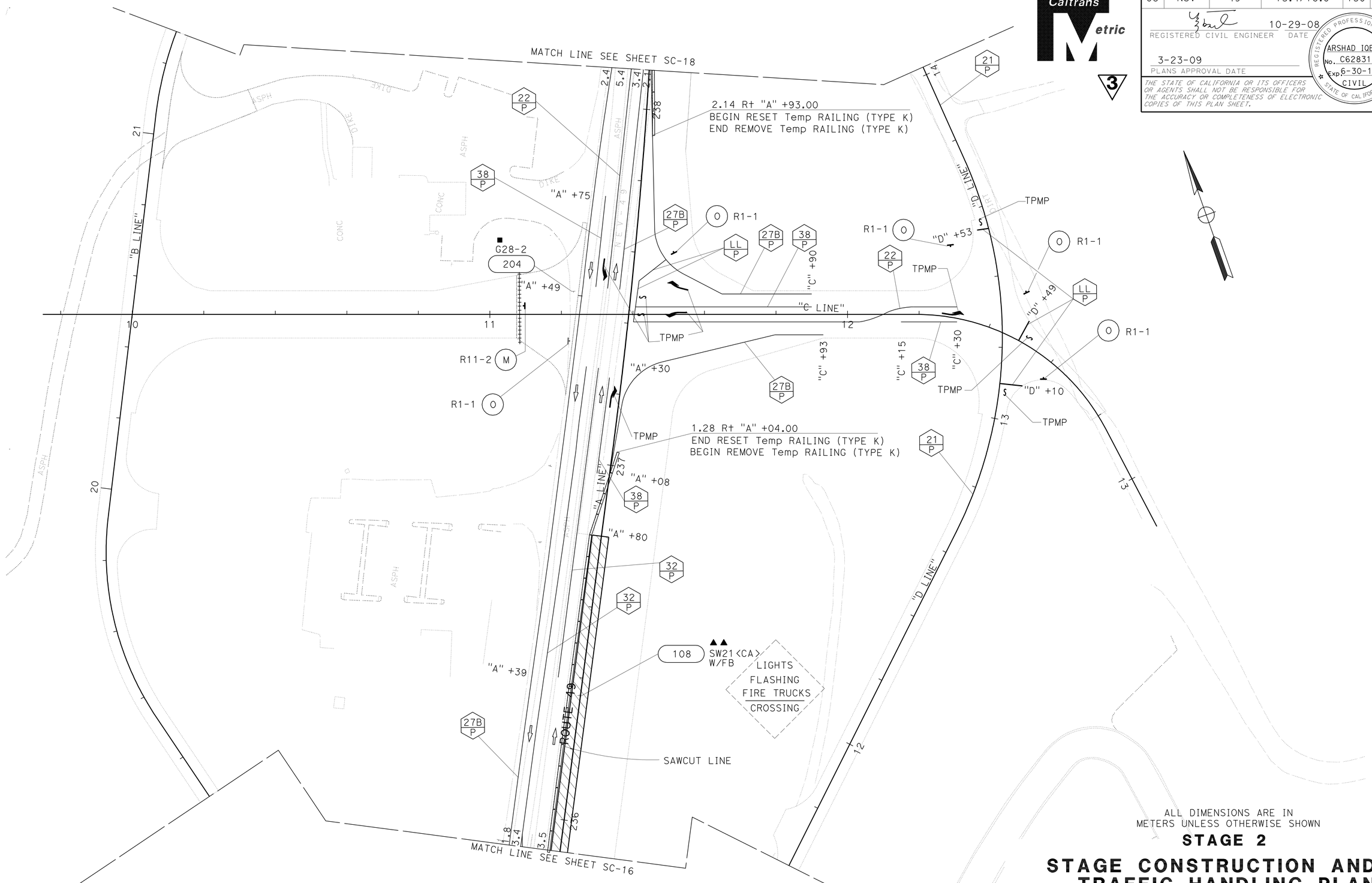

3 **REVISED PER ADDENDUM No. 3 DATED APRIL 12, 2010**

THIS PLAN ACCURATE FOR STAGE CONSTRUCTION AND TRAFFIC HANDLING WORK ONLY.

ALL DIMENSIONS ARE IN METERS UNLESS OTHERWISE SHOWN

STAGE 2

STAGE CONSTRUCTION AND TRAFFIC HANDLING PLAN

SCALE 1:500

SC-17

REVISED BY	N. SELWAL
DATE REVISED	A. IQBAL
CALCULATED-DESIGNED BY	
CHECKED BY	
FUNCTIONAL SUPERVISOR	M. ALVANDI

STATE OF CALIFORNIA - DEPARTMENT OF TRANSPORTATION
SOUTH REGION
OFFICE OF DESIGN, SOUTH
DESIGN BRANCH S16

Caltrans

LAST REVISION 09-26-07 DATE PLOTTED => 08-APR-2010 TIME PLOTTED => 10:28

Dist	COUNTY	ROUTE	KILOMETER POST TOTAL PROJECT	SHEET No.	TOTAL SHEETS
03	Nev	49	15.4/18.0	151	312

REGISTERED CIVIL ENGINEER DATE 10-29-08

PLANS APPROVAL DATE 3-23-09

REGISTERED PROFESSIONAL ENGINEER ARSHAD IQBAL No. C62831 Exp. 6-30-10 CIVIL STATE OF CALIFORNIA

THE STATE OF CALIFORNIA OR ITS OFFICERS OR AGENTS SHALL NOT BE RESPONSIBLE FOR THE ACCURACY OR COMPLETENESS OF ELECTRONIC COPIES OF THIS PLAN SHEET.

Caltrans Metric

3

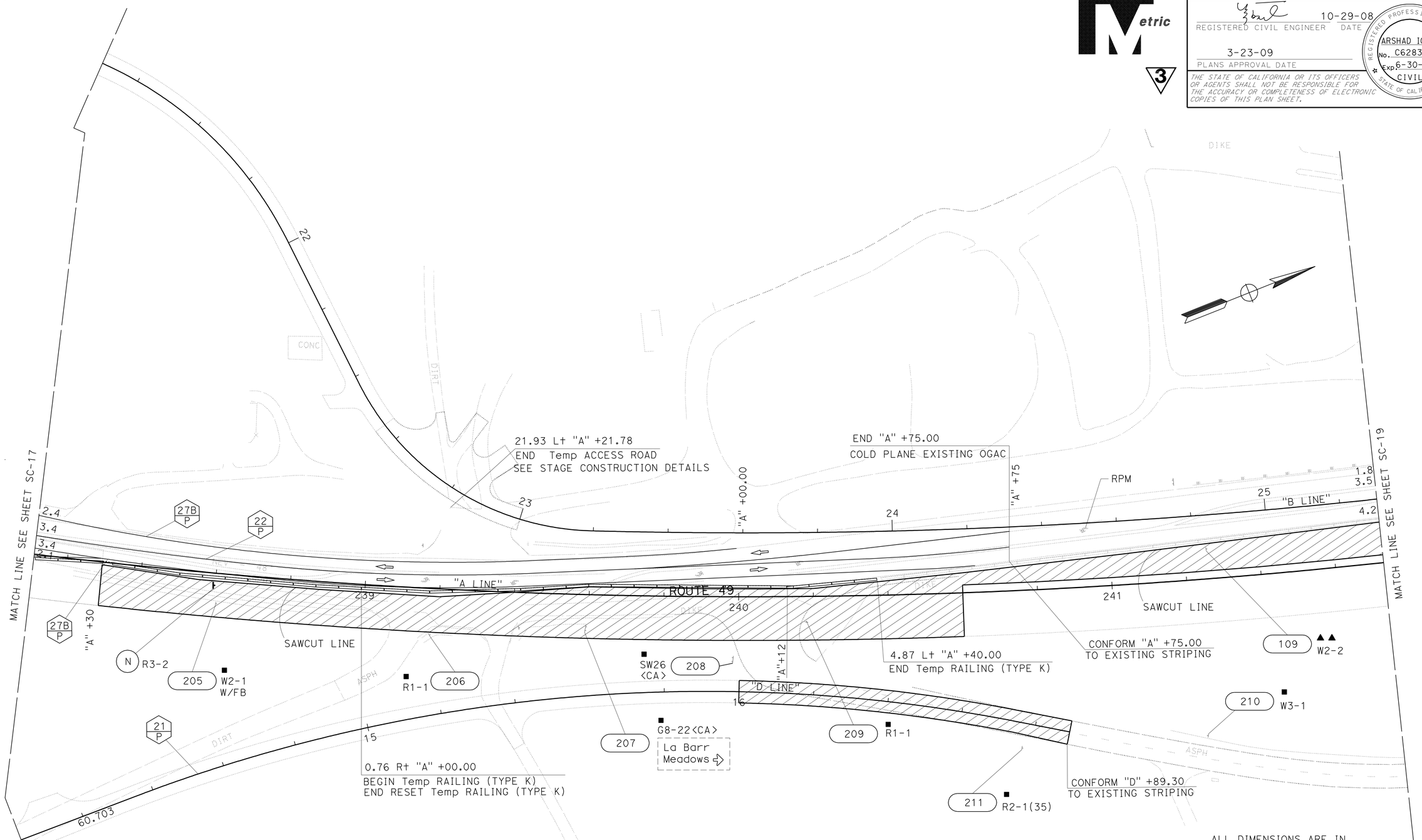

ALL DIMENSIONS ARE IN METERS UNLESS OTHERWISE SHOWN

STAGE 2

STAGE CONSTRUCTION AND TRAFFIC HANDLING PLAN

SCALE 1:500

SC-18

3 **REVISED PER ADDENDUM No. 3 DATED APRIL 12, 2010**

THIS PLAN ACCURATE FOR STAGE CONSTRUCTION AND TRAFFIC HANDLING WORK ONLY.

STATE OF CALIFORNIA - DEPARTMENT OF TRANSPORTATION
SOUTH REGION
OFFICE OF DESIGN, SOUTH
DESIGN BRANCH S16

Caltrans

FUNCTIONAL SUPERVISOR: M. ALVANDI

CALCULATED-DESIGNED BY: N. SELWAL

CHECKED BY: A. IQBAL

REVISED BY / DATE REVISED

LAST REVISION DATE PLOTTED => 08-APR-2010
TIME PLOTTED => 10:28

Dist	COUNTY	ROUTE	KILOMETER POST TOTAL PROJECT	SHEET No.	TOTAL SHEETS
03	Nev	49	15.4/18.0	159	312

REGISTERED CIVIL ENGINEER 10-29-08 DATE

3-23-09
PLANS APPROVAL DATE

REGISTERED PROFESSIONAL ENGINEER ARSHAD IQBAL No. C62831 Exp. 6-30-10 CIVIL STATE OF CALIFORNIA

THE STATE OF CALIFORNIA OR ITS OFFICERS OR AGENTS SHALL NOT BE RESPONSIBLE FOR THE ACCURACY OR COMPLETENESS OF ELECTRONIC COPIES OF THIS PLAN SHEET.

Caltrans Metric

3

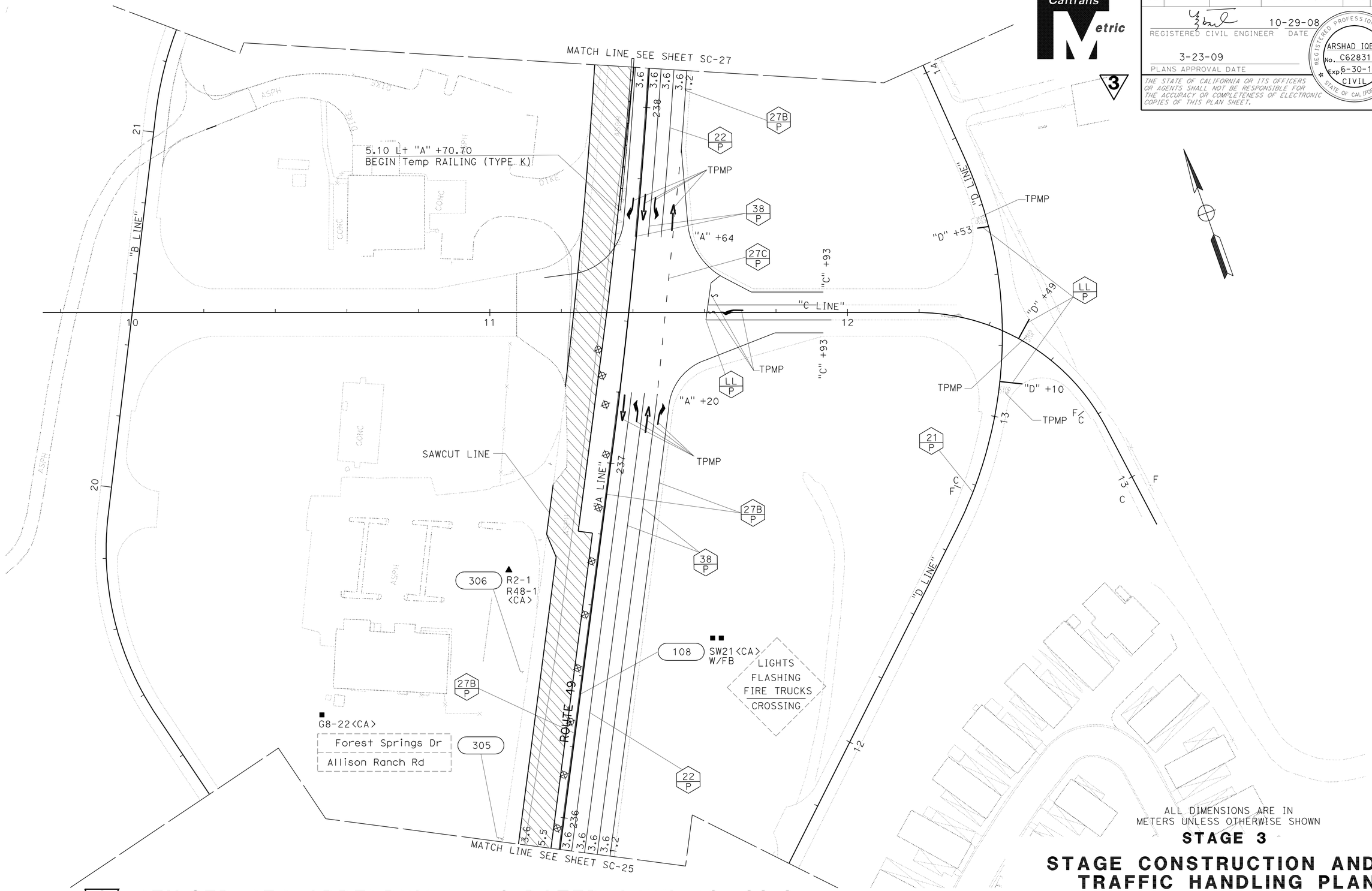

ALL DIMENSIONS ARE IN METERS UNLESS OTHERWISE SHOWN

STAGE 3

STAGE CONSTRUCTION AND TRAFFIC HANDLING PLAN

SCALE 1:500

SC-26

3 **REVISED PER ADDENDUM No. 3 DATED APRIL 12, 2010**

THIS PLAN ACCURATE FOR STAGE CONSTRUCTION AND TRAFFIC HANDLING WORK ONLY.

REVISED BY	DATE REVISED

CALCULATED-DESIGNED BY	N. SELWAL
CHECKED BY	A. IQBAL
FUNCTIONAL SUPERVISOR	M. ALVANDI

STATE OF CALIFORNIA - DEPARTMENT OF TRANSPORTATION
SOUTH REGION
OFFICE OF DESIGN SOUTH
DESIGN BRANCH S16

Caltrans

LAST REVISION DATE PLOTTED => 08-APR-2010
TIME PLOTTED => 10:39

Dist	COUNTY	ROUTE	KILOMETER POST TOTAL PROJECT	SHEET No.	TOTAL SHEETS
03	Nev	49	15.4/18.0	160	312

REGISTERED CIVIL ENGINEER 10-29-08 DATE

3-23-09
PLANS APPROVAL DATE

REGISTERED PROFESSIONAL ENGINEER ARSHAD IQBAL No. C62831 Exp. 6-30-10 CIVIL STATE OF CALIFORNIA

THE STATE OF CALIFORNIA OR ITS OFFICERS OR AGENTS SHALL NOT BE RESPONSIBLE FOR THE ACCURACY OR COMPLETENESS OF ELECTRONIC COPIES OF THIS PLAN SHEET.

Caltrans Metric

3

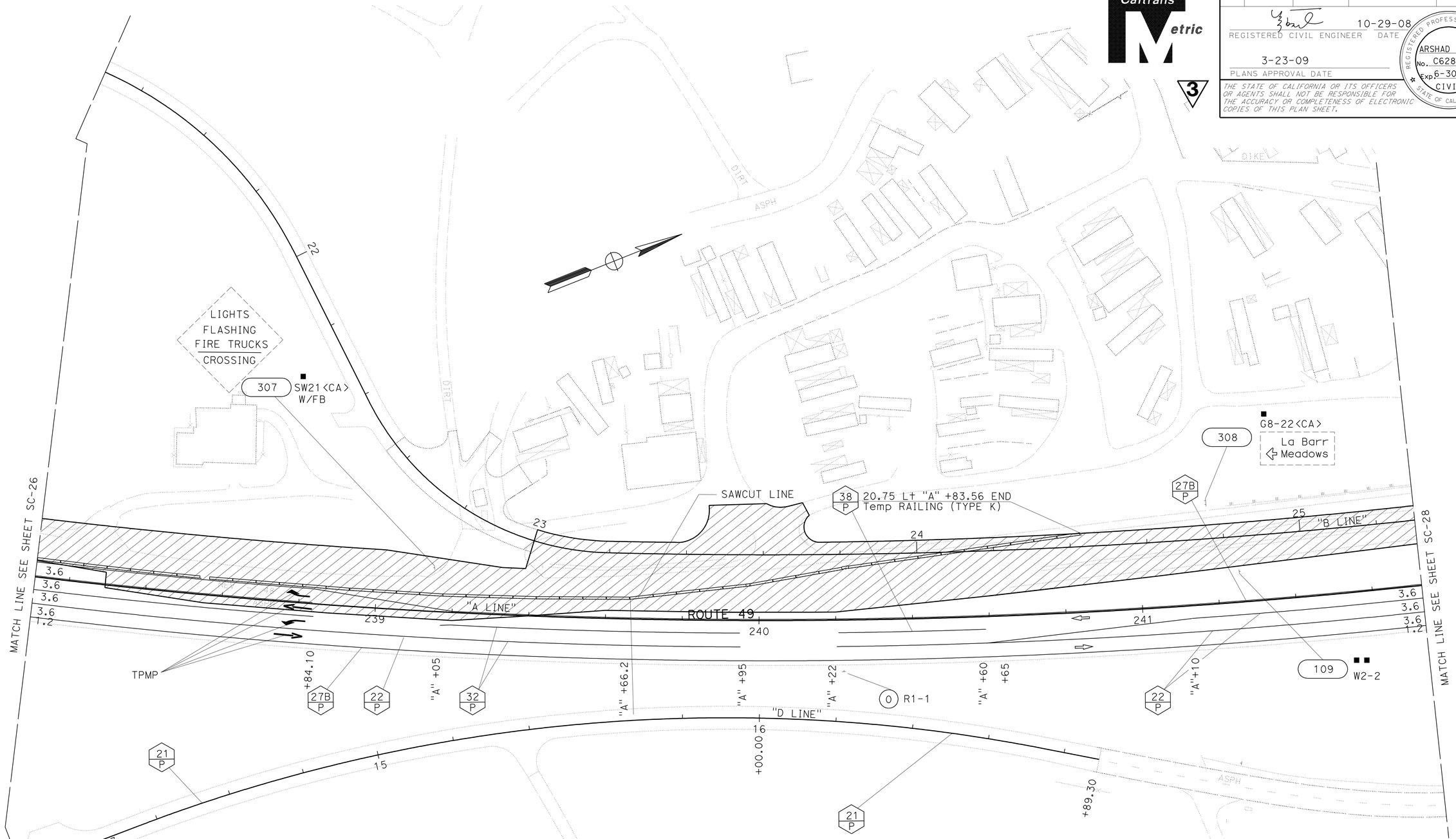

ALL DIMENSIONS ARE IN METERS UNLESS OTHERWISE SHOWN

STAGE 3

STAGE CONSTRUCTION AND TRAFFIC HANDLING PLAN

SCALE 1:500 **SC-27**

3 **REVISED PER ADDENDUM No. 3 DATED APRIL 12, 2010**

THIS PLAN ACCURATE FOR STAGE CONSTRUCTION AND TRAFFIC HANDLING WORK ONLY.

STATE OF CALIFORNIA - DEPARTMENT OF TRANSPORTATION
SOUTH REGION
OFFICE OF DESIGN, SOUTH
DESIGN BRANCH S16

Caltrans

FUNCTIONAL SUPERVISOR: M. ALVANDI

CALCULATED-DESIGNED BY: N. SELWAL
CHECKED BY: A. IQBAL

REVISED BY
DATE REVISED

LAST REVISION
DATE PLOTTED => 08-APR-2010
TIME PLOTTED => 10:40

Dist	COUNTY	ROUTE	KILOMETER POST TOTAL PROJECT	SHEET No.	TOTAL SHEETS
03	Nev	49	15.4/18.0	177	312

REGISTERED CIVIL ENGINEER 10-29-08 DATE

3-23-09
PLANS APPROVAL DATE

REGISTERED PROFESSIONAL ENGINEER ARSHAD IQBAL No. C62831 Exp. 6-30-10 CIVIL STATE OF CALIFORNIA

THE STATE OF CALIFORNIA OR ITS OFFICERS OR AGENTS SHALL NOT BE RESPONSIBLE FOR THE ACCURACY OR COMPLETENESS OF ELECTRONIC COPIES OF THIS PLAN SHEET.

Caltrans Metric

ADDITIONAL STATIONARY MOUNTED CONSTRUCTION AREA SIGNS

SIGN LETTER	SIGN CODE FEDERAL	SIGN CODE CALIFORNIA	PANEL SIZE (mm)	SIGN MESSAGE	NUMBER OF POST AND SIZE (mm)	NUMBER OF SIGNS
F	W9-1 R†		1219 X 1219	RIGHT LANE ENDS	1-140 X 140	1
G	W4-2 R†	W11<CA>	1219 X 1219	RIGHT LANE END SYMBOL	1-140 X 140	1
H	R4-1	R63<CA>	914 X 1219	DO NOT PASS	1-89 X 89	1
I	W21-5bR(500)	C30B(500) <CA>	1219 X 1219	RIGHT SHOULDER CLOSED 500 FT	1-140 X 140	1
J	W7-3a(1 1/2)	C30A<CA> W71(1 1/2)	1219 X 1219 610 X 457	SHOULDER CLOSED NEXT 1½ MILE	1-140 X 140	1
K	W3-4	C36<CA>	1219 X 1219	BE PREPARED TO STOP	1-140 X 140	1
L	W1-4 L†	W1-L†	1219 X 1219	REVERSING CURVE LEFT SYMBOL	1-140 X 140	2
M	R11-2	C2<CA>	1219 X 762	ROAD CLOSED	Mounted on Barricade	1
N	R3-2	R17<17>	914 X 914	NO LEFT TURN SYMBOL	1-89 X 89	2
O	R1-1	R1	750 X 750	STOP	1-140 X 140	~~1~~ 6
P	R11-2	C2<CA>	1219 X 762	ROAD CLOSED	Mounted on Barricade	1
Q	R11-2	C2<CA>	1219 X 762	ROAD CLOSED	Mounted on Barricade	1

3

3 REVISED PER ADDENDUM No. 3 DATED APRIL 12, 2010

TRAFFIC HANDLING QUANTITIES

THQ-4

STATE OF CALIFORNIA - DEPARTMENT OF TRANSPORTATION
SOUTH REGION
OFFICE OF DESIGN, SOUTH
DESIGN BRANCH S16

Caltrans

FUNCTIONAL SUPERVISOR: M. ALVANDI

CALCULATED-DESIGNED BY: N. SELWAL
CHECKED BY: A. IQBAL

REVISED BY
DATE REVISED

LAST REVISION
DATE PLOTTED => 08-APR-2010
TIME PLOTTED => 10:28

Dist	COUNTY	ROUTE	KILOMETER POST TOTAL PROJECT	SHEET No.	TOTAL SHEETS
03	Nev	49	15.4/18.0	178	312

REGISTERED CIVIL ENGINEER 10-29-08 DATE

3-23-09
PLANS APPROVAL DATE

REGISTERED PROFESSIONAL ENGINEER ARSHAD IQBAL No. C62831 Exp. 6-30-10 CIVIL STATE OF CALIFORNIA

THE STATE OF CALIFORNIA OR ITS OFFICERS OR AGENTS SHALL NOT BE RESPONSIBLE FOR THE ACCURACY OR COMPLETENESS OF ELECTRONIC COPIES OF THIS PLAN SHEET.

Caltrans Metric

REMOVE PAVEMENT MARKER

DESCRIPTION	STAGE 2 EA
TYPE D	23
TOTAL	23

TEMPORARY PAVEMENT MARKER

DETAIL NUMBER	STAGE 2		STAGE 3	
	TYPE D EA	TYPE G EA	TYPE D EA	TYPE G EA
22	270	-	860	-
38	-	25	-	90
SUBTOTAL	270	25	860	90
TOTAL	1 245			

REMOVE THERMOPLASTIC PAVEMENT MARKING

DESCRIPTION	STAGE 2 (m^2)
TYPE III ARROW	1.39
TOTAL	1.39

REMOVE THERMOPLASTIC YELLOW TRAFFIC STRIPE

DESCRIPTION	STAGE 2 (m)
DETAIL 22	158
TOTAL	158

TEMPORARY TRAFFIC STRIPE (PAINT) 3

DETAIL NUMBER	STAGE 1 (m)	STAGE 2 (m)	STAGE 3 (m)
21		614	89
22		977	**6842**
27B	372	1 007	**9015**
38		160	**1370**
12			**3200**
27C			**160**
32			**3040**
SUBTOTAL	**372**	**2 758**	**23 716**
TOTAL	**26 846**		

REMOVE THERMPLASTIC WHITE TRAFFIC STRIPE

DESCRIPTION	STAGE 1 (m)	STAGE 2 (m)
DETAIL 12	210	
DETAIL 38	-	48
SUBTOTAL	210	48
TOTAL	258	

CHANNELIZER - PLASTIC DRUM - BARRICADE

STAGE NUMBER	CHANNELIZER (SURFACE MOUNTED) (EACH)	TRAFFIC PLASTIC DRUM		TYPE III BARRICADE	
		FURNISH (EACH)	INSTALL (N) (EACH)	FURNISH (EACH)	INSTALL (N) (EACH)
1	8	26	26	14	14
2	45	-	-	18	22
3	-	4	30	-	-
4	-	109	139	-	-
TOTAL	53	139	195	32	36

(N) NOT A SEPARATE PAY ITEM, FOR INFORMATION ONLY.

TEMPORARY PAVEMENT MARKING (PAINT)

DESCRIPTION	STAGE 1 (m^2)	STAGE 2 (m^2)	STAGE 3 (m^2)
LIMIT LINE	-	11.08	4.13
"STOP"	-	10.20	4.08
TYPE III ARROW	-	23.40	35.10
TYPE IV ARROW	-	-	1.39
TYPE V ARROW	-	-	24.48
TYPE VI ARROW	11.7	-	-
SUBTOTAL	11.7	44.68	69.18
TOTAL	125.56		

3 REVISED PER ADDENDUM No. 3 DATED APRIL 12, 2010

TRAFFIC HANDLING QUANTITIES

THQ-5

STATE OF CALIFORNIA - DEPARTMENT OF TRANSPORTATION
SOUTH REGION
OFFICE OF DESIGN SOUTH
DESIGN BRANCH S16

Caltrans

FUNCTIONAL SUPERVISOR M. ALVANDI

CALCULATED-DESIGNED BY A. IQBAL

CHECKED BY N. SELWAL

REVISED BY

DATE REVISED

LAST REVISION DATE PLOTTED => 08-APR-2010
TIME PLOTTED => 10:28

Dist	COUNTY	ROUTE	KILOMETER POST TOTAL PROJECT	SHEET No.	TOTAL SHEETS
03	Nev	49	15.4/18.0	193	312

REGISTERED CIVIL ENGINEER 10-29-08 DATE

3-23-09
PLANS APPROVAL DATE

REGISTERED PROFESSIONAL ENGINEER ARSHAD IQBAL No. C62831 Exp. 6-30-10 CIVIL STATE OF CALIFORNIA

THE STATE OF CALIFORNIA OR ITS OFFICERS OR AGENTS SHALL NOT BE RESPONSIBLE FOR THE ACCURACY OR COMPLETENESS OF ELECTRONIC COPIES OF THIS PLAN SHEET.

Caltrans Metric

NOTES:

(N) NOT A SEPARATE PAY ITEM, FOR INFORMATION ONLY.
* STATIONS ARE AT CENTERLINE OF THE DRIVEWAYS.
** QUANTITY ADDED TO ROADWAY QUANTITY,
*** SHRINKAGE & SWELLING FACTORS ARE NOT INCLUDED.

ROADWAY QUANTITIES 3

LOCATION	*** ROADWAY EXCAVATION	*** (N) EMBANKMENT	IMPORTED MATERIAL (SHOULDER BACKING)	CLASS 2 AGGREGATE BASE	HOT MIX ASPHALT (TYPE A)	RUBBERIZED HOT MIX ASPHALT (OPEN GRADED)	PAVING ASPHALT (BINDER-GEOSYNTHETIC PAVEMENT INTERLAYER)	GEOSYNTHETIC PAVEMENT INTERLAYER	PLACE HMA (MISCELLANEOUS AREA)	TACK COAT
	m^3	m^3	TONNE	m^3	TONNE	TONNE	TONNE	m^2	m^2	TONNE
"A" 222+00.000 TO 247+00.000	37 281	15 556	**834.5**	11 843	19 563	3 047				78.8
"B" 9+96.170 TO 26+76.794	2 324	9 293		1 771	3 135					8.0
"C" 10+03.000 TO 10+21.050	37	369		62	96					2.0
"C" 10+21.050 TO 11+31.200	520	224		687	847					
"C" 11+51.730 TO 12+20.000	815	0		524	523					
"C" 12+20.000 TO 12+37.026	144	0		50	78					
"C" 12+46.365 TO 12+80.000	63	11		45	69					
"D" 10+00.000 TO 16+89.310	1 139	923		1 016	1 024					2.2
"LJA" 9+26.000 TO 9+88.750	9	50		19	33					
"LJB" 10+12.413 TO 10+23.972	80	53		50	77					
"LJC" 10+09.750 TO 12+99.000	528	44		105	152					
~~Temp ACCESS ROAD~~		~~278~~		~~262~~	~~314~~					
PLACE HMA DIKE			23		98					
PLACE HMA (MISC AREA)					35				181	
PLACE HMA (MISC AREA) LINED DITCH AND OSD					214				1 242	
DRIVEWAYS	235	374		337	461				1 982	
GPI AND BINDER GPI SEE Q-4							1.7	1 467		
DEER ESCAPE RAMPS		211								
TOTAL	43 175	**27 108**	**857.5**	**16 509**	**26 405**	3 047	1.7	1 467	3 405	91.0

METAL BEAM GUARD RAILING

LOCATION		METAL BEAM GUARD RAILING (WOOD POST)	ALTERNATIVE FLARED TERMINAL SYSTEM	ALTERNATIVE IN-LINE TERMINAL SYSTEM	END ANCHOR ASSEMBLY (TYPE SFT)	(N) LAYOUT TYPE
		m	EA	EA	EA	TYPE
"A" 227+28.57 TO 228+28.00	R†	99.4	1		1	11B
"A" 227+60.00 TO 228+51.43	L†	91.4	1		1	11B
"B" 19+00.00 TO 22+00.00	L†	300.0		2		11D
TOTAL		490.8	2	2	2	

PLACE HOT MIX ASPHALT DIKE

LOCATION		(TYPE A)	(TYPE D)	(TYPE F)	(N) HMA DIKE APPROACH TRANSITION	(N) HOT MIX ASPHALT (TYPE A)	(N) IMPORTED MATERIAL (SHOULDER BACKING)
		m	m	m	m	TONNE	TONNE
"A" 225+41.00 TO 227+38.00	L†		194.0		3.0	30.6	
"B" 9+96.17 TO 10+07.09	R†	11.5				1.0	5.0
"B" 9+96.17 TO 10+46.00	L†	50.0				4.0	
"A" 227+40.00 TO 228+28.00	R†			88.0		2.7	5.0
"C" 11+73.63 TO "D" 13+56.94	L†		70.0		6.0	12.4	11.0
"C" 11+73.62 TO "D" 13+00.55	R†&L†		72.0		6.0	12.6	2.0
"A" 242+40.00 TO 244+38.00	R†		192.0		6.0	31.4	
"B" 16+94.00 TO 17+02.15	L†	16.5				1.44	
"B" 17+08.65 TO 17+25.00	L†	19.5				1.70	
TOTAL		97.5	528.0	88.0	21.0	** 97.84	23.0 **

MINOR CONCRETE

SHEET No.	LOCATION	MINOR CONCRETE (CURB AND GUTTER)	MINOR CONCRETE (SIDEWALK)	MINOR CONCRETE (CURB RAMP) CURB RAMP	MINOR CONCRETE (CURB RAMP) RETAINING CURB
		m^3			
C-10	LOCATION 1	4.26	2.63	1.45	
C-10	LOCATION 2	4.26	3.27	1.36	
C-11	LOCATION 3	3.95	1.87	0.44	.23
C-11	LOCATION 4	4.92	1.89	0.44	.23
	SUBTOTAL			3.69	.46
	TOTAL	17.39	9.66	4.15	

3 REVISED PER ADDENDUM No. 3 DATED APRIL 12, 2010

SUMMARY OF QUANTITIES

Q-1

STATE OF CALIFORNIA - DEPARTMENT OF TRANSPORTATION
SOUTH REGION
OFFICE OF DESIGN SOUTH
DESIGN BRANCH S16
Caltrans

FUNCTIONAL SUPERVISOR M. ALVANDI
CALCULATED-DESIGNED BY A. IQBAL
CHECKED BY N. SELWAL
REVISED BY
DATE REVISED

LAST REVISION DATE PLOTTED => 08-APR-2010
TIME PLOTTED => 10:28

Dist	COUNTY	ROUTE	KILOMETER POST TOTAL PROJECT	SHEET No.	TOTAL SHEETS
03	Nev	49	15.4/18.0	194	312

REGISTERED CIVIL ENGINEER 10-29-08 DATE

3-23-09
PLANS APPROVAL DATE

REGISTERED PROFESSIONAL ENGINEER ARSHAD IQBAL No. C62831 Exp. 6-30-10 CIVIL STATE OF CALIFORNIA

THE STATE OF CALIFORNIA OR ITS OFFICERS OR AGENTS SHALL NOT BE RESPONSIBLE FOR THE ACCURACY OR COMPLETENESS OF ELECTRONIC COPIES OF THIS PLAN SHEET.

Caltrans Metric

DRIVEWAY QUANTITIES

SHEET No.	* STATION/ LOCATION	(N) RECONSTRUCT DRIVEWAY	(N) CONSTRUCT NEW DRIVEWAY	(N) OVERLAY DRIVEWAY	(N) ROADWAY EXCAVATION	(N) EMBANKMENT	(N) CLASS 2 AGGREGATE BASE	(N) HOT MIX ASPHALT (TYPE A)	(N) PLACE HMA (MISCELLANEOUS AREA)
		EA	EA	EA	m^3	m^3	m^3	TONN	m^2
L-2	"A" 225+55.31 R+	X			22	2	21	17	72
L-2	"A" 226+35.89 R+	X			22	5	21	26	110
L-3	"B" 10+65.85 L+	X			5	3	9	13	58
L-4	"B" 12+73.90 L+	X			6	5	18	23	96
L-4	"B" 12+87.56 L+	X			5	3	9	13	55
L-4	"B" 13+28.19 L+	X			11	0	6	8	34
L-4	"B" 13+60.14 L+	X		X	7	0	5	6	24
L-4	"B" 13+77.86 L+	X		X	5	0	5	6	23
L-4	"B" 14+20.11 L+	X			5	7	10	11	47
L-4	"B" 16+09.57 L+	X		X	11	8	21	29	119
L-5	"B" 17+06.90 L+	X		X	37	6	23	27	112
L-6	"B" 19+95.33 R+		X		0	178	33	38	155
L-6	"B" 21+08.44 R+		X		38	40	35	56	268
L-6	"D" 11+71.74 L+		X		2	6	10	16	65
L-6	"D" 13+86.62 R+	X			2	11	5	8	32
L-7	"D" 14+11.83 L+		X		7	2	12	18	76
L-7	"D" 15+38.25 R+	X			6	4	8	13	56
L-7	"B" 22+44.50 R+		X		6	3	5	8	35
L-7	"B" 22+68.68 R+		X		1	30	13	19	82
L-7	"B" 22+74.92 L+		X		9	24	14	19	89
L-7	"B" 22+84.86 L+		X		5	25	16	27	112
L-7	"B" 23+53.23 L+	X			21	2	17	27	117
L-7	"B" 23+60.00 L+	X			2	10	21	33	145
	TOTAL **	15	8	4	235	374	337	461	1 982

RESET MAILBOX

*STATION	LOCATION	(N) WOOD POST 89 mm X 89 mm X 1680 mm	(N) MAILBOX	(N) NEWSPAPER RECEPTACLES	RESET MAILBOX
		EA			
"A" 226+25	R+	1	1	1	1
"A" 228+39	L+	1	1		1
"A" 228+40	L+	1	2	2	2
"A" 236+70	L+	1	1		1
"A" 237+70	L+	1	1	1	1
"A" 239+21	R+	1		1	1
"A" 239+21	R+	1		2	2
"A" 238+75	L+	1	2		2
"A" 238+76	L+	1	1		1
"B" 12+80	R+	1	2		2
"B" 12+80	R+	1	2		2
"B" 12+80	R+	1	2		2
"B" 12+80	R+	1	2		2
"B" 12+80	R+	1	2		2
"B" 12+80	R+	1	1		2
"B" 12+95	L+	1	1	1	1
"B" 13+35	L+	1	1	1	1
"B" 13+55	L+	1	1	1	1
"B" 13+90	L+	1	1	1	1
"B" 22+90	R+	1		1	1
"B" 26+37	L+	1	2		2
"B" 26+37	L+	1	2		2
"B" 26+37	L+	1	1		1
"D" 10+23	R+	1	1		1
"D" 13+82	R+	1	1	1	1
TOTAL		25	31	13	36

REMOVE ROADWAY QUANTITIES

LOCATION	LOCATION	REMOVE METAL BEAM GUARD RAILING	REMOVABLE BASE AND SURFACING (3)
		m	m^3
"A" 227+40.00	L+		**9.3**
"A" 227+55.00	L+		**10.4**
"A" 228+36.92 TO 231+12.82	L+		**292.8**
"A" 235+00.00 TO 235+40.00	L+		**21.2**
"A" 235+51.26 TO 237+17.00	L+		**229.2**
"A" 237+59.60 TO 237+82.15	L+		**30.3**
"A" 238+17.61 TO 238+68.03	L+		**27.7**
"A" 241+11.96 TO 241+17.78	R+		**6.8**
"A" 243+02.18 TO 243+94.16	L+		**103.0**
"B" 22+80.00	L+		**4.0**
"B" 23+02.00 TO 23+21.56	L+		**7.5**
"D" 10+04.20 TO 10+25.45	L+		**13.9**
"D" 13+22.30 TO 13+55.32	R+		**13.6**
"D" 14+09.26 TO 15+16.22	L+		**62.1**
"D" 15+35.00	L+		**6.6**
"D" 16+00.00 TO 16+49.28	L+		**22.1**
"A" 235+13.50 TO 235+56.72	L+	43.2	
"A" 241+20.00 TO 242+74.13	R+	154.1	
"A" 244+29.19 TO 246+79.16	R+	250	
TOTAL		447.3	**860.5**

RELOCATE MAILBOX****

STATION		EA
FROM	TO	
10.30 R+ "A" 239+28.00	7.48 R+ "D" 12+80.00	5
	TOTAL	5

**** NEIGHBORHOOD UNIT (NBU) MAIL BOX

REMOVE GATE

STATION	EA
"B" 10+09.00	1
TOTAL	1

(3) **REVISED PER ADDENDUM No. 3 DATED APRIL 12, 2010**

SUMMARY OF QUANTITIES
Q-2

STATE OF CALIFORNIA - DEPARTMENT OF TRANSPORTATION
SOUTH REGION
OFFICE OF DESIGN SOUTH
DESIGN BRANCH S16

Caltrans

FUNCTIONAL SUPERVISOR: M. ALVANDI
CALCULATED-DESIGNED BY: N. SELWAL
CHECKED BY: A. IQBAL
REVISED BY
DATE REVISED

LAST REVISION 09-26-07 | DATE PLOTTED => 08-APR-2010 | TIME PLOTTED => 10:29

Dist	COUNTY	ROUTE	KILOMETER POST TOTAL PROJECT	SHEET No.	TOTAL SHEETS
03	Nev	49	15.4/18.0	196	312

Caltrans Metric

REGISTERED CIVIL ENGINEER DATE 10-29-08

PLANS APPROVAL DATE 3-23-09

REGISTERED PROFESSIONAL ENGINEER ARSHAD IQBAL No. C62831 Exp. 6-30-10 CIVIL STATE OF CALIFORNIA

THE STATE OF CALIFORNIA OR ITS OFFICERS OR AGENTS SHALL NOT BE RESPONSIBLE FOR THE ACCURACY OR COMPLETENESS OF ELECTRONIC COPIES OF THIS PLAN SHEET.

GEOSYNTHETIC PAVEMENT INTERLAYER

STAGE	LOCATION	(N) GEOSYNTHETIC PAVEMENT INTERLAYER	(N) PAVING ASPHALT (BINDER-GFI)
		m^2	TONNE
1	"A" 225+40.00 TO 228+60.00	384	0.44
	"A" 236+80.00 TO 238+30.00	180	0.21
	"A" 243+80.00 TO 246+80.00	360	0.41
2	"A" 225+41.00 TO 228+00.00	311	0.36
	"A" 237+66.74 TO 239+60.00	232	0.27
	** TOTAL	1 467	1.70

DEER ESCAPE RAMP

LOCATION	EA	TIMBER CRIB WALL m^2 (N)	(N) EMBANKMENT m^3
31.80 R+ "A" 230+20.00	1	7.92	64.5
24.80 L+ "A" 230+20.00	1	7.92	69.2
27.00 R+ "A" 242+40.00	1	7.92	77.4
TOTAL	3	23.76	211.1

TEMPORARY CRASH CUSHION MODULE

STAGE	LOCATION	ARRAY TS14 (EA)	TYPE ABSORB 350 (EA)
STAGE 1	"A" 226+46.90 5.55 R+	14	
STAGE 1	"A" 228+55.00 3.93 L+	14	
STAGE 1	"A" 231+53.50 3.40 L+	14	
STAGE 1	"A" 246+70.00 4.13 R+		1
STAGE 2	"A" 228+41.48 12.10 L+	14	
	TOTAL	56	1

REPLACE AC SURFACING

SHEET No.	LOCATION	DEPTH mm	AREA m^3
L-2	"A" 225+47.90 TO 225+65.10 L+	100	4.0
	"A" 225+75.10 TO 225+91.20 L+	100	4.1
L-3	"A" 226+74.40 TO 227+17.40 L+	100	8.6
	"A" 227+58.60 TO 227+80.80 L+	100	2.5
		TOTAL	19.2

MAINTENANCE VEHICLE PULLOUT

STATION	LOCATION	(N) EA
"A" 231+62.65 TO 231+88.65	R+	1
"A" 236+72.00 TO 236+97.33	L+	1
TOTAL		2

TEMPORARY RAILING (TYPE K)

STAGE	SHEET No.	LOCATION	m
1	SC-4	10.56 R+ "A" 225+05.78 TO 8.11 R+ "A" 226+21.50	116
	SC-4/SC-5	5.55 R+ "A" 226+56.90 TO 2.20 L+ "A" 228+39.00	182
	SC-5/SC-6	3.93 L+ "A" 228+65.00 TO 1.40 L+ "A" 231+28.00	263
	SC-6/SC-7	3.40 L+ "A" 231+63.50 TO 0.00 "A" 234+38.64	275
	SC-7/SC-9	0.53 R+ "A" 234+78.00 TO 6.47 R+ "A" 239+00.00	422
	SC-9/SC-11	1.25 R+ "A" 240+23.00 TO 4.13 R+ "A" 246+70.00	647
2	SC-13/SC-14	7.90 L+ "A" 225+41.00 TO 12.1 L+ "A" 228+31.48	291
	SC-14/SC-15	4.50 L+ "A" 228+65.00 TO 5.15 L+ "A" 231+28.00	263
	SC-15	5.15 L+ "A" 231+28.00 TO 5.06 L+ "A" 231+63.50	36
	SC-15/SC-16	5.15 L+ "A" 231+63.50 TO 4.72 L+ "A" 233+82.00	222
	SC-16	4.72 L+ "A" 233+82.00 TO 4.21 L+ "A" 234+78.00	96
	SC-16/SC-17	4.21 L+ "A" 234+78.00 TO 1.28 L+ "A" 237+04.00	226
	SC-17/SC-18	4.21 L+ "A" 237+93.00 TO 0.76 L+ "A" 239+00.00	107
	SC-18	0.76 L+ "A" 239+00.00 TO 4.87 L+ "A" 240+40.00	140
3	SC-23	3.90 L+ "A" 227+25.65 TO 2.60 L+ "A" 229+14.00	188
	SC-24/SC-25	11.72 L+ "A" 230+98.54 TO 5.14 L+ "A" 235+36.00	438
	SC-26/SC-27	5.10 L+ "A" 237+70.10 TO 19.60 L+ "A" 240+83.56	313
			4 225

WEED CONTROL MAT (FIBER)

	LOCATION	m^2
	UNDER METAL BEAM GUARD RAILING	
R+	"A" 227+28.57 TO 228+28.00	92
L+	"A" 227+60.00 TO 228+51.43	93
	TOTAL	183

3

~~CRASH CUSHION (ADIEM)~~

~~STATION~~	~~EA~~
~~14.037 L+ "A" 235+19.03~~	~~1~~
~~15.167 L+ "A" 244+10.98~~	~~1~~
~~TOTAL~~	~~2~~

CONCRETE BARRIER

STATION	TYPE 60 G	CONCRETE BARRIER TRANSITION	***** ARCHITECTURAL TREATMENT (RANDOM STONE)	***** PRAPARE AND STAIN CONCRETE
	m		m^2	m^2
"A" 234+50.00 TO 235+17.54	67.5		191.7	191.7
"A" 241+65.00 TO 244+00.00	235.0		667.4	667.4
"A" 235+17.54 TO 235+28.24		10.7	25.0	25.0
"A" 244+00.00 TO 244+10.79		10.7	25.0	25.0
	302.5	21.4		
TOTAL	323.9		909.1	909.1

***** ADDITIONAL QUANTITIES SHOWN ON SOUNDWALL PLANS.

3 REVISED PER ADDENDUM No. 3 DATED APRIL 12, 2010

SUMMARY OF QUANTITIES

Q-4

STATE OF CALIFORNIA - DEPARTMENT OF TRANSPORTATION
SOUTH REGION
OFFICE OF DESIGN, SOUTH
DESIGN BRANCH S16

Caltrans

FUNCTIONAL SUPERVISOR M. ALVANDI

CALCULATED-DESIGNED BY N. SELWAL

CHECKED BY A. IQBAL

REVISED BY

DATE REVISED

LAST REVISION 10/09/07

DATE PLOTTED => 08-APR-2010

TIME PLOTTED => 10:29

Dist	COUNTY	ROUTE	KILOMETER POST TOTAL PROJECT	SHEET No.	TOTAL SHEETS
03	Nev	49	15.4/18.0	213	312

Caltrans Metric

LICENSED LANDSCAPE ARCHITECT

3-23-09
PLANS APPROVAL DATE

LICENSED LANDSCAPE ARCHITECT
Name & License No.
Signature
12-31-09
Renewal Date
10-28-08
Date
STATE OF CALIFORNIA

THE STATE OF CALIFORNIA OR ITS OFFICERS OR AGENTS SHALL NOT BE RESPONSIBLE FOR THE ACCURACY OR COMPLETENESS OF ELECTRONIC COPIES OF THIS PLAN SHEET.

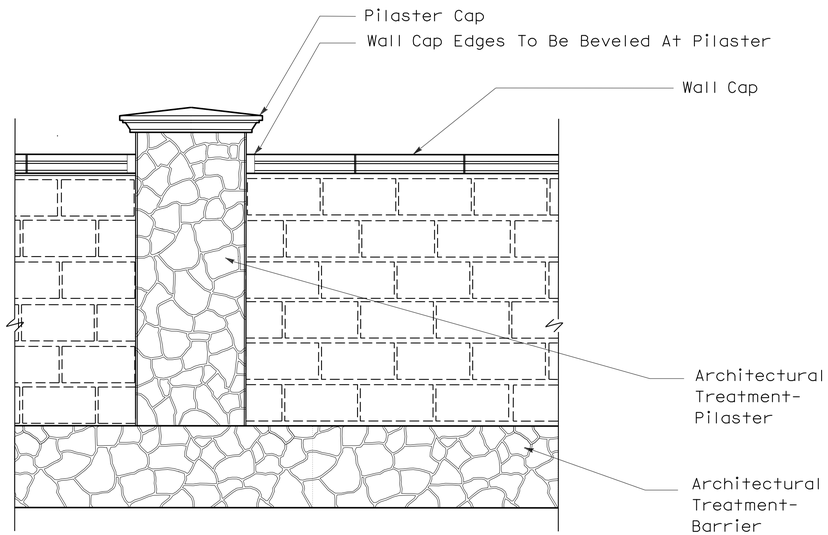

COUNTY ROAD ELEVATION

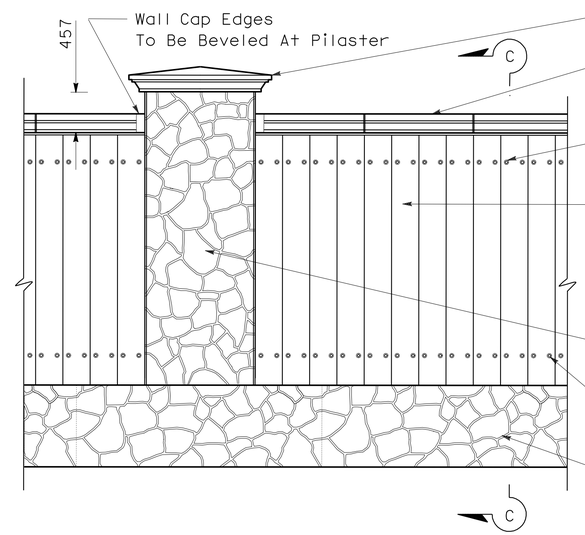

SR 49 ELEVATION

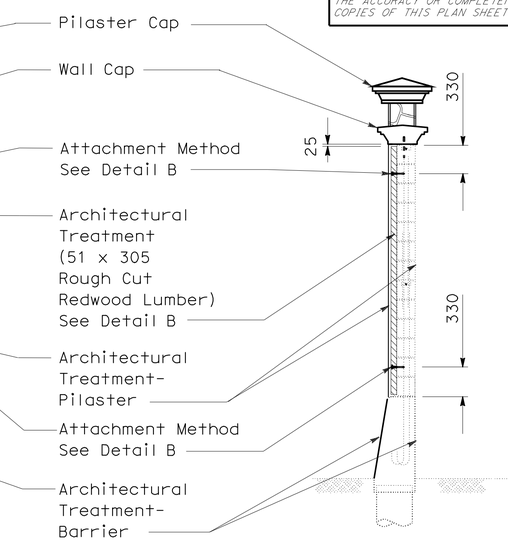

SECTION C-C

ARCHITECTURAL TREATMENT- SOUNDWALL TYPE D

PILASTER LOCATION TABLE

PILASTER NO	STATION	STATION LOCATION	PILASTER LOCATION RELATIVE TO STATION
1	SW1 10+00	BEGIN SOUNDWALL	UP
2	SW1 10+28.182	MASONRY WALL EXPANSION JOINT	DOWN
3	SW1 10+56.364	MASONRY WALL EXPANSION JOINT	DOWN
4	SW1 10+84.546	MASONRY WALL EXPANSION JOINT	DOWN
5	SW1 11+12.728	MASONRY WALL EXPANSION JOINT	DOWN
6	SW1 11+40.91	MASONRY WALL EXPANSION JOINT	DOWN
7	SW1 11+69.092	MASONRY WALL EXPANSION JOINT	DOWN
8	SW1 11+97.274	MASONRY WALL EXPANSION JOINT	DOWN
9	SW1 12+25.456	MASONRY WALL EXPANSION JOINT	DOWN
10	SW1 12+53.638	MASONRY WALL EXPANSION JOINT	DOWN
11	SW1 12+81.82	MASONRY WALL EXPANSION JOINT	DOWN
12	SW1 13+10	END SOUNDWALL	DOWN
13	SW2 10+00	BEGIN SOUNDWALL	UP
14	SW2 10+25.512	MASONRY WALL EXPANSION JOINT	DOWN
15	SW2 10+51.024	MASONRY WALL EXPANSION JOINT	DOWN
16	SW2 10+76.536	MASONRY WALL EXPANSION JOINT	DOWN
17	SW1 11+02.048	MASONRY WALL EXPANSION JOINT	UP
18	SW2 11+27.56	MASONRY WALL EXPANSION JOINT	DOWN
19	SW3 12+58.213	MASONRY WALL EXPANSION JOINT	DOWN
20	SW2 11+81.169	MASONRY WALL EXPANSION JOINT	DOWN
21	SW2 12+04.125	MASONRY WALL EXPANSION JOINT	DOWN
22	SW2 12+27.081	MASONRY WALL EXPANSION JOINT	DOWN
23	SW2 12+49.083	MASONRY WALL EXPANSION JOINT	DOWN
24	SW2 12+70.131	END SOUNDWALL	DOWN
25	SW3 10+00	BEGIN SOUNDWALL	UP
26	SW3 10+28.29	MASONRY WALL EXPANSION JOINT	DOWN
27	SW3 10+5658	MASONRY WALL EXPANSION JOINT	DOWN
28	SW3 10+84.87	MASONRY WALL EXPANSION JOINT	DOWN
29	SW3 11+13.16	MASONRY WALL EXPANSION JOINT	DOWN
30	SW3 11+41.45	MASONRY WALL EXPANSION JOINT	DOWN
31	SW3 11+69.74	MASONRY WALL EXPANSION JOINT	DOWN
32	SW3 11+98.03	MASONRY WALL EXPANSION JOINT	DOWN
33	SW3 12+26.32	MASONRY WALL EXPANSION JOINT	DOWN
34	SW3 12+54.61	MASONRY WALL EXPANSION JOINT	DOWN
35	SW2 12+82.897	END SOUNDWALL	DOWN

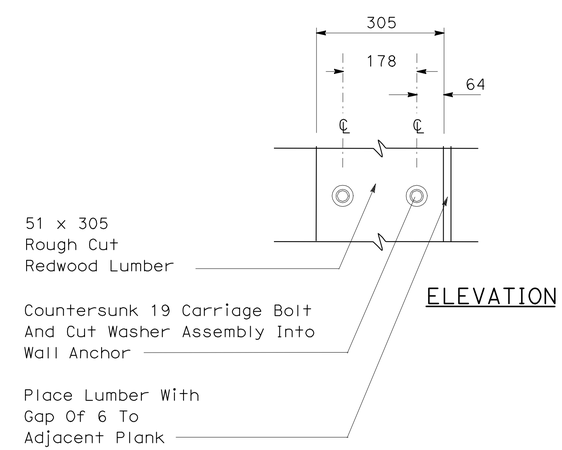

ELEVATION

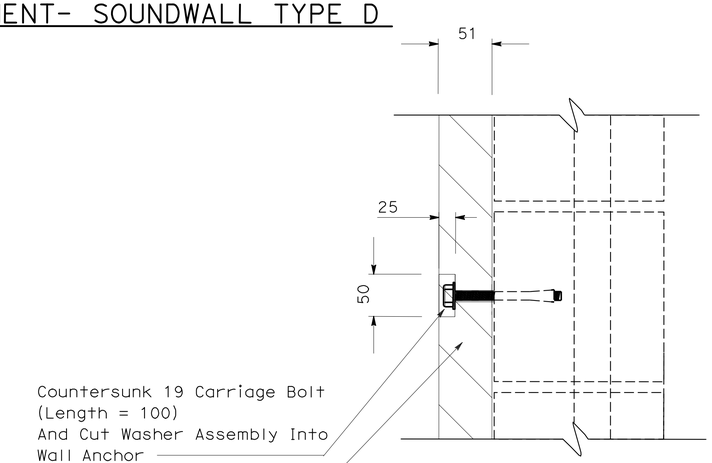

SECTION

DETAIL B

NOTE: 3

1. Architectural Treatment At Pilaster And Barrier Shall Receive "Prepare And Stain Concrete" As Specified In The Special Provisions.
2. Architectural Treatment (51 X 305 Rough Cut Redwood Lumber) shall be construction heart grade.

ALL DIMENSIONS IN MILLIMETERS UNLESS OTHERWISE NOTED

3 **REVISED PER ADDENDUM No. 3 DATED APRIL 12, 2010**

NO SCALE

LANDSCAPE DETAILS SW-17

STATE OF CALIFORNIA - DEPARTMENT OF TRANSPORTATION
Caltrans LANDSCAPE ARCHITECTURE

SENIOR LANDSCAPE ARCHITECT: J.D. ADAMS
CALCULATED-DESIGNED BY: J. DONOHOE
CHECKED BY: J. PIETRZAK
REVISED BY / DATE REVISED

LAST REVISION 00-00-00
DATE PLOTTED => 08-APR-2010
TIME PLOTTED => 10:29

Dist	COUNTY	ROUTE	KILOMETER POST TOTAL PROJECT	SHEET No.	TOTAL SHEETS
03	Nev	49	15.4/18.0	246	312

R. P. Gill 10-27-08
REGISTERED ELECTRICAL ENGINEER DATE

3-23-09
PLANS APPROVAL DATE

REGISTERED PROFESSIONAL ENGINEER RUPINDER PAL GILL No. 16642 Exp. 06-30-10 ELECTRICAL STATE OF CALIFORNIA

THE STATE OF CALIFORNIA OR ITS OFFICERS OR AGENTS SHALL NOT BE RESPONSIBLE FOR THE ACCURACY OR COMPLETENESS OF ELECTRONIC COPIES OF THIS PLAN SHEET.

Caltrans Metric

3

SEE SHEET E-4

PROJECT NOTES (FOR THIS SHEET ONLY):

1. INSTALL STATE-FURNISHED MODEL 332 CABINET WITH MODEL 2070 CONTROLLER ASSEMBLY. FURNISH AND INSTALL BBS. CONSTRUCT FOUNDATION FOR BBS SUPPORT.
2. FOR SIGN TO BE MOUNTED ON SIGNAL MAST ARM, SEE PAVEMENT DELINEATION AND SIGN PLANS.
3. INSTALL TYPE 1 PEDESTRIAN BARRICADE.

(CAD 6)
TELEPHONE DEMARCATION CABINET
DETAIL

LEGEND:

⊟ COUNTDOWN PEDESTRIAN HEAD (SEE SPECIAL PROVISIONS)

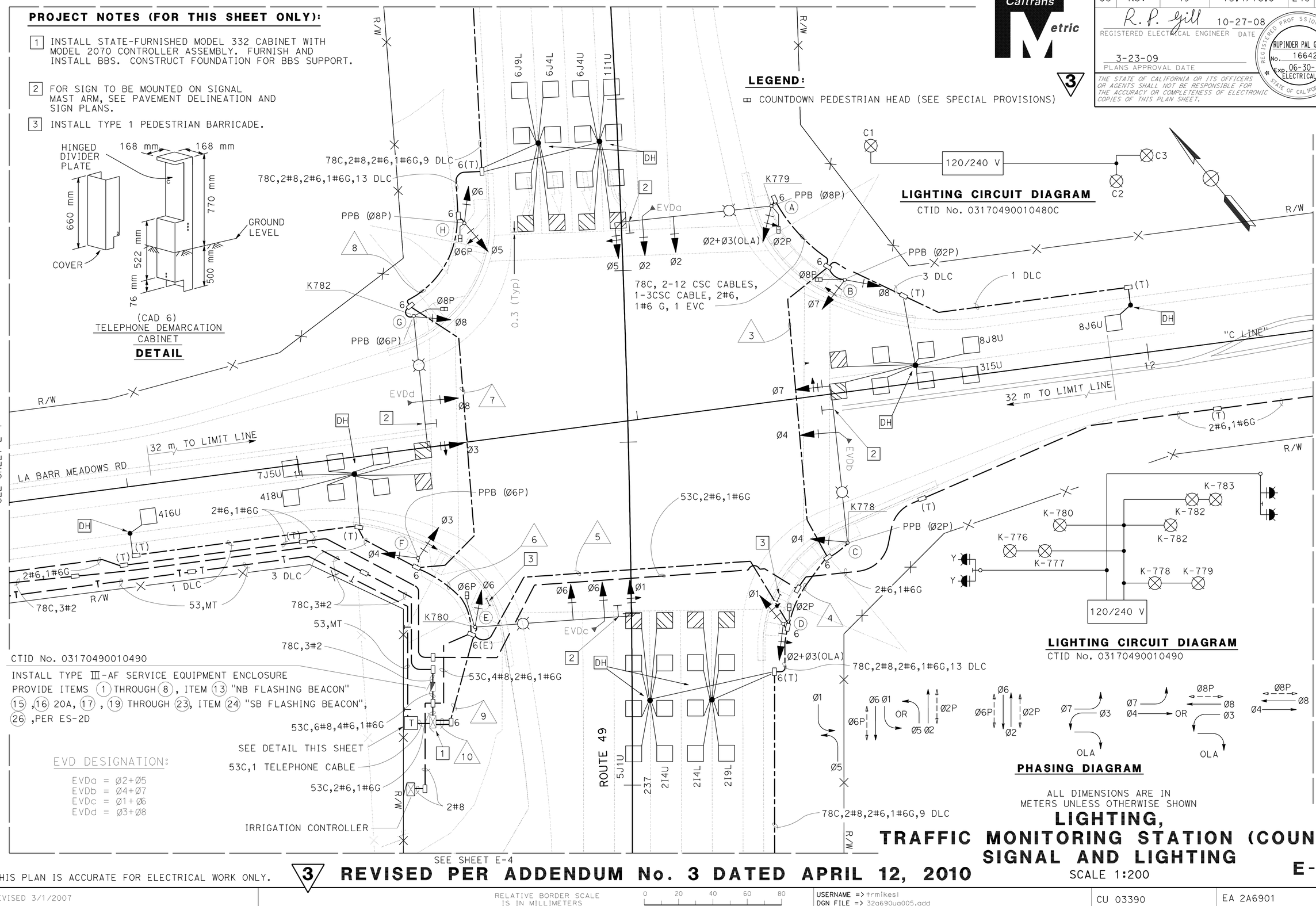

CTID No. 03170490010490

INSTALL TYPE III-AF SERVICE EQUIPMENT ENCLOSURE PROVIDE ITEMS (1) THROUGH (8), ITEM (13) "NB FLASHING BEACON" (15), (16) 20A, (17), (19) THROUGH (23), ITEM (24) "SB FLASHING BEACON", (26), PER ES-2D

EVD DESIGNATION:

EVDa = Ø2+Ø5
EVDb = Ø4+Ø7
EVDc = Ø1+Ø6
EVDd = Ø3+Ø8

ALL DIMENSIONS ARE IN METERS UNLESS OTHERWISE SHOWN

LIGHTING, TRAFFIC MONITORING STATION (COUNT) SIGNAL AND LIGHTING

SCALE 1:200

E-5

THIS PLAN IS ACCURATE FOR ELECTRICAL WORK ONLY.

3 **REVISED PER ADDENDUM No. 3 DATED APRIL 12, 2010**

REVISED BY	DATE REVISED

CALCULATED-DESIGNED BY: ALI HASSANI
CHECKED BY: RUPINDER PAL GILL
FUNCTIONAL SUPERVISOR: STEVEN BLOCK

STATE OF CALIFORNIA - DEPARTMENT OF TRANSPORTATION
Caltrans
TRAFFIC ELECTRICAL DESIGN MARYSVILLE

32a690ua005.add

LAST REVISION 10-29-08
DATE PLOTTED => 08-APR-2010
TIME PLOTTED => 10:29