Dist	COUNTY	ROUTE	POST MILES TOTAL PROJECT	SHEET No.	TOTAL SHEETS
03	ED,Pla	89	27.2/27.4, 0.0/T8.5	1	499

STATE OF CALIFORNIA
DEPARTMENT OF TRANSPORTATION

ACSTP-P089(102)E

PROJECT PLANS FOR CONSTRUCTION ON
STATE HIGHWAY
IN EL DORADO AND PLACER COUNTIES AT AND NEAR TAHOE CITY FROM 0.2 MILE SOUTH OF THE EL DORADO/PLACER COUNTY LINE TO THE TRUCKEE RIVER BRIDGE

TO BE SUPPLEMENTED BY STANDARD PLANS DATED MAY 2006

INDEX OF PLANS

SHEET No.	DESCRIPTION
1	TITLE AND LOCATION MAP
2-9	TYPICAL CROSS SECTIONS
10-28	LAYOUTS
29-61	PROFILES AND SUPERELEVATION DIAGRAM
62-163	CONSTRUCTION DETAILS
164-165	TEMPORARY WATER POLLUTION CONTROL DETAILS
166-173	EROSION CONTROL PLANS, DETAILS AND QUANTITIES
174-369	DRAINAGE PLANS, PROFILES, DETAILS AND QUANTITIES
370-388	UTILITY PLANS
389	CONSTRUCTION AREA SIGNS
390-391	STAGE CONSTRUCTION PLANS
392-411	TRAFFIC HANDLING PLANS, DETAILS AND QUANTITIES
412-445	PAVEMENT DELINEATION AND SIGN PLANS, DETAILS AND QUANTITIES
446-449	SUMMARY OF QUANTITIES
450-451	RETAINING WALL PLANS, DETAILS AND QUANTITIES
452-453	ELECTRICAL PLANS
454-497	REVISED AND NEW STANDARD PLANS

STRUCTURE PLANS

498-499	WARD CREEK BRIDGE Br No. 19-0034

THE STANDARD PLANS LIST APPLICABLE TO THIS CONTRACT IS INCLUDED IN THE NOTICE TO BIDDERS AND SPECIAL PROVISIONS BOOK.

LOCATION MAP

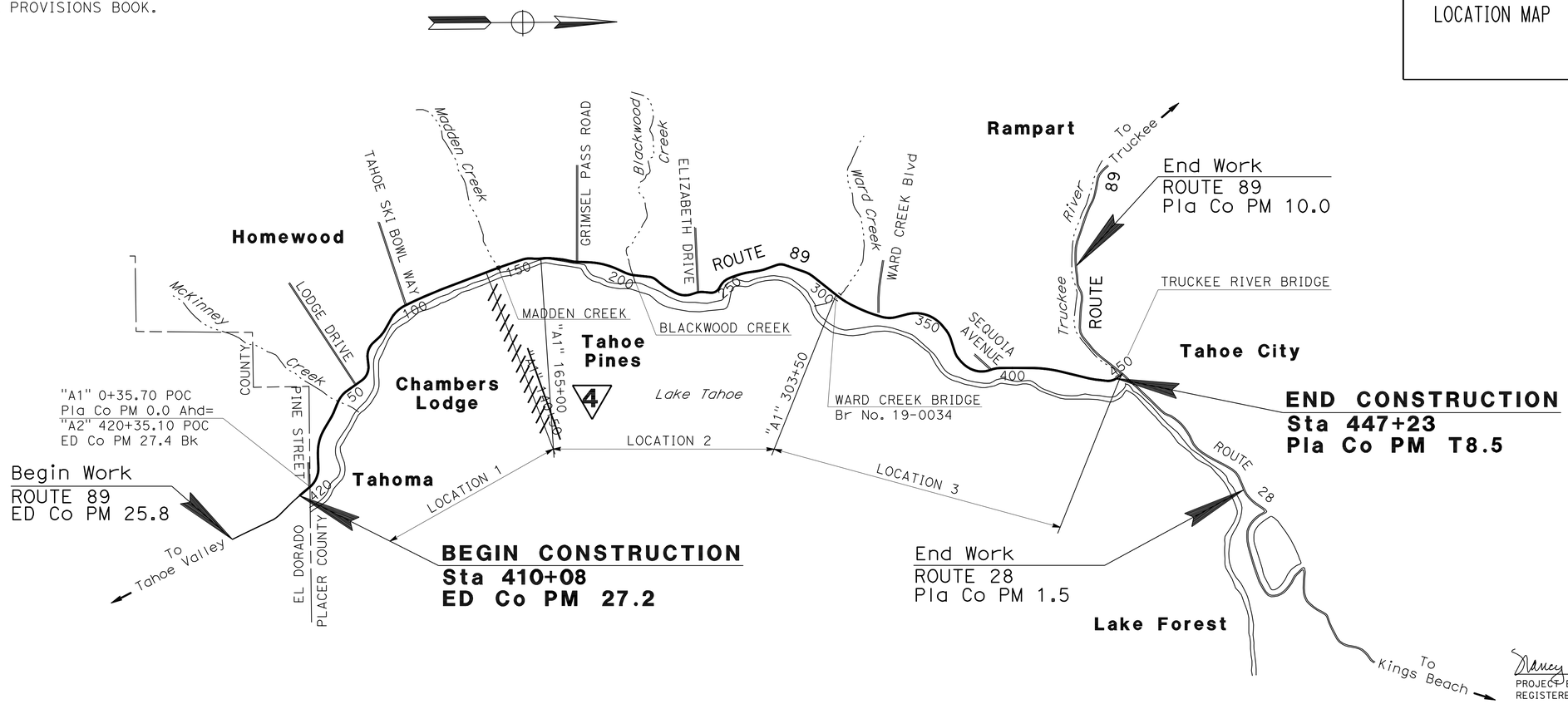

NO SCALE

4 REVISED PER ADDENDUM No. 4 DATED MARCH 2, 2012

THE CONTRACTOR SHALL POSSESS THE CLASS (OR CLASSES) OF LICENSE AS SPECIFIED IN THE "NOTICE TO BIDDERS."

Nancy Y. Bruton 2-24-11
PROJECT ENGINEER DATE
REGISTERED CIVIL ENGINEER

August 29, 2011
PLANS APPROVAL DATE

REGISTERED PROFESSIONAL ENGINEER N.Y. BRUTON No. 52690 Exp. 12-31-12 CIVIL STATE OF CALIFORNIA

THE STATE OF CALIFORNIA OR ITS OFFICERS OR AGENTS SHALL NOT BE RESPONSIBLE FOR THE ACCURACY OR COMPLETENESS OF SCANNED COPIES OF THIS PLAN SHEET.

CONTRACT No.	03-2A9204
PROJECT ID	0300000297

PROJECT MANAGER A. KIANI/M.COOK
DESIGN ENGINEER K. KEATON

LAST REVISION 00-00-00
DATE PLOTTED => 01-MAR-2012
TIME PLOTTED => 10:53

Dist	COUNTY	ROUTE	POST MILES TOTAL PROJECT	SHEET No.	TOTAL SHEETS
03	ED,Pla	89	27.2/27.4, 0.0/T8.5	91	499

REGISTERED CIVIL ENGINEER 1-17-12 DATE

8-29-11
PLANS APPROVAL DATE

REGISTERED PROFESSIONAL ENGINEER KEVIN F. LEE No. 78077 Exp. 09-30-13 CIVIL STATE OF CALIFORNIA

THE STATE OF CALIFORNIA OR ITS OFFICERS OR AGENTS SHALL NOT BE RESPONSIBLE FOR THE ACCURACY OR COMPLETENESS OF SCANNED COPIES OF THIS PLAN SHEET.

2

NOTE:

FOR ACCURATE RIGHT OF WAY DATA, CONTACT
RIGHT OF WAY ENGINEERING AT THE DISTRICT OFFICE.

LEFT DRIVEWAY CURVE DATA

No.	Sta	CURVE	R	BC		EC	
				OFFSET	Sta	OFFSET	Sta
L49	152+04	A	15′	19.0′ Lt	151+76.52	30.33′ Lt	151+85.89
		B	10′	31.54′ Lt	152+20.43	22.0′ Lt	152+30.43
L50	153+35	A	10′	22.0′ Lt	153+13.53	33.36′ Lt	153+23.44
		B	15′	31.28′ Lt	153+46.17	19.0′ Lt	153+55.37

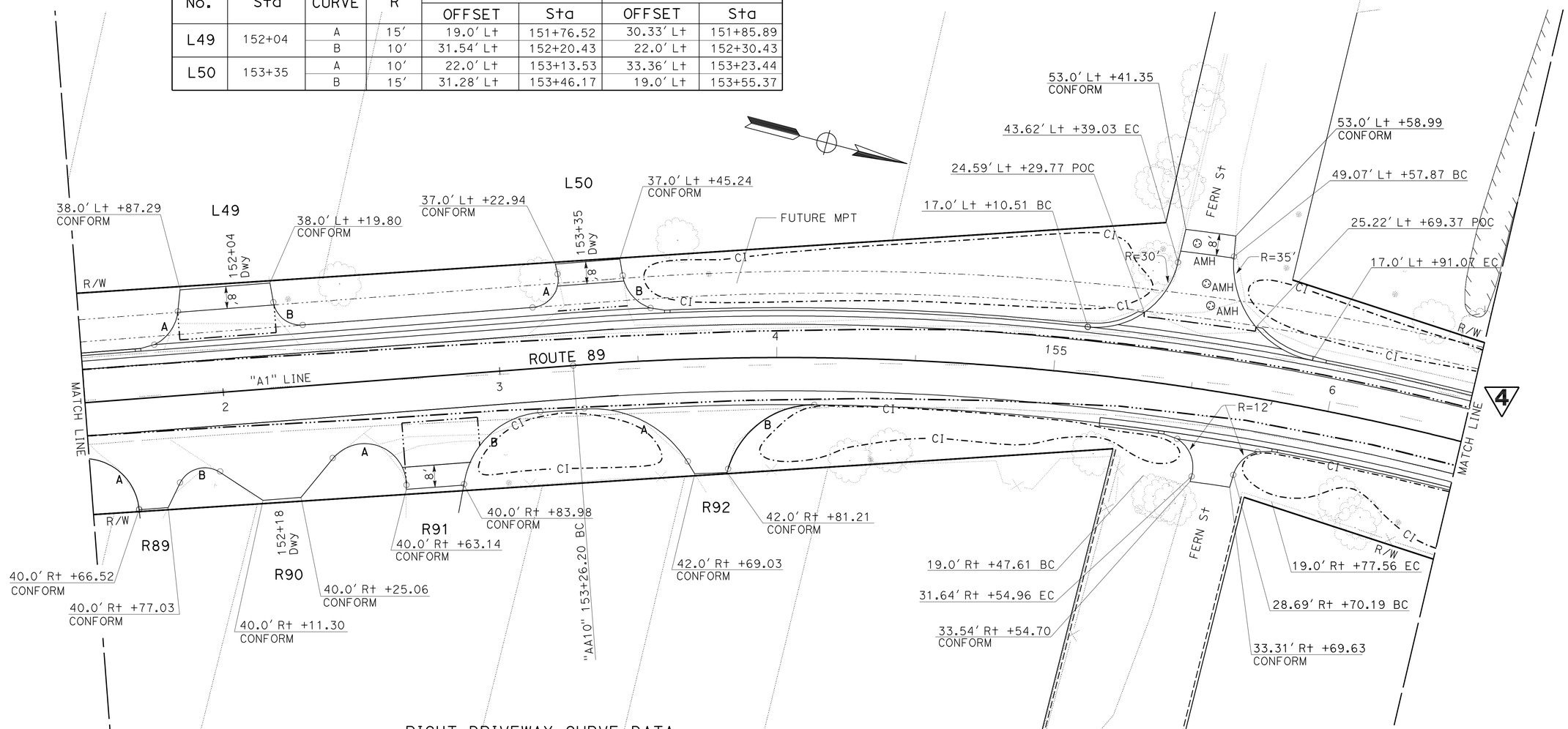

4

RIGHT DRIVEWAY CURVE DATA

No.	Sta	CURVE	R	BC		EC	
				OFFSET	Sta	OFFSET	Sta
R89	152+18	A	20′	20.0′ R+	151+46.52	40.0′ R+	151+66.52
		B	10′	31.63′ R+	151+81.90	28.72′ R+	151+96.64
R91	152+18	A	15′	26.99′ R+	152+37.47	40.0′ R+	152+63.41
		B	30′	40.0′ R+	152+83.98	16.0′ R+	153+13.37
R92	152+18	A	40′	16.0′ R+	153+29.34	37.69′ R+	153+65.95
		B	25′	35.02′ R+	153+83.20	17.0′ R+	154+08.17

4 **REVISED PER ADDENDUM No. 4 DATED MARCH 2, 2012**

2 **REVISED PER ADDENDUM No. 2 DATED FEBRUARY 2, 2012**

CONSTRUCTION DETAILS

SCALE: 1" = 20′

C-30

STATE OF CALIFORNIA - DEPARTMENT OF TRANSPORTATION
Caltrans
NORTH REGION
DIVISION OF ENGINEERING

FUNCTIONAL SUPERVISOR: K. KEATON
CALCULATED-DESIGNED BY: N. BRUTON
CHECKED BY: K. KEATON
REVISED BY
DATE REVISED

LAST REVISION 00-00-00
DATE PLOTTED => 29-FEB-2012
TIME PLOTTED => 14:41

Dist	COUNTY	ROUTE	POST MILES TOTAL PROJECT	SHEET No.	TOTAL SHEETS
03	ED,Pla	89	27.2/27.4, 0.0/T8.5	92	499

REGISTERED CIVIL ENGINEER 1-17-12 DATE

8-29-11
PLANS APPROVAL DATE

REGISTERED PROFESSIONAL ENGINEER KEVIN F. LEE No. 78077 Exp. 09-30-13 CIVIL STATE OF CALIFORNIA

THE STATE OF CALIFORNIA OR ITS OFFICERS OR AGENTS SHALL NOT BE RESPONSIBLE FOR THE ACCURACY OR COMPLETENESS OF SCANNED COPIES OF THIS PLAN SHEET.

NOTE:

FOR ACCURATE RIGHT OF WAY DATA, CONTACT RIGHT OF WAY ENGINEERING AT THE DISTRICT OFFICE.

LEFT DRIVEWAY CURVE DATA

No.	Sta	CURVE	R	BC OFFSET	BC Sta	EC OFFSET	EC Sta
L51	157+90	A	10′	19.0′ Lt	157+71.29	23.30′ Lt	157+74.58
		B	9′	26.38′ Lt	157+96.26	19.0′ Lt	157+99.60
L52	158+63	A	10′	19.0′ Lt	158+47.27	23.59′ Lt	158+50.67
		B	1′	34.27′ Lt	158+54.54	34.98′ Lt	158+54.53
		C	10′	23.66′ Lt	158+71.38	18.99′ Lt	158+74.93
L53	158+99	A	3′	18.0′ Lt	158+91.04	21.15′ Lt	158+94.10
		B	3′	20.88′ Lt	159+01.13	18.0′ Lt	159+04.19
L54	159+62	A	10′	19.0′ Lt	159+41.02	23.98′ Lt	159+45.96
		B	10′	24.60′ Lt	159+76.04	19.0′ Lt	159+81.24
L55	160+45	A	9′	19.0′ Lt	160+29.67	25.65′ Lt	160+33.12
		B	9′	26.55′ Lt	160+58.28	19.0′ Lt	160+61.71
L56	161+16	A	15′	19.0′ Lt	161+00.16	28.07′ Lt	161+07.16
		B	15′	28.83′ Lt	161+26.38	19.0′ Lt	161+33.56
L57	161+72	A	15′	19.0′ Lt	161+56.16	25.12′ Lt	161+62.01
		B	15′	26.77′ Lt	161+81.28	19.0′ Lt	161+87.85

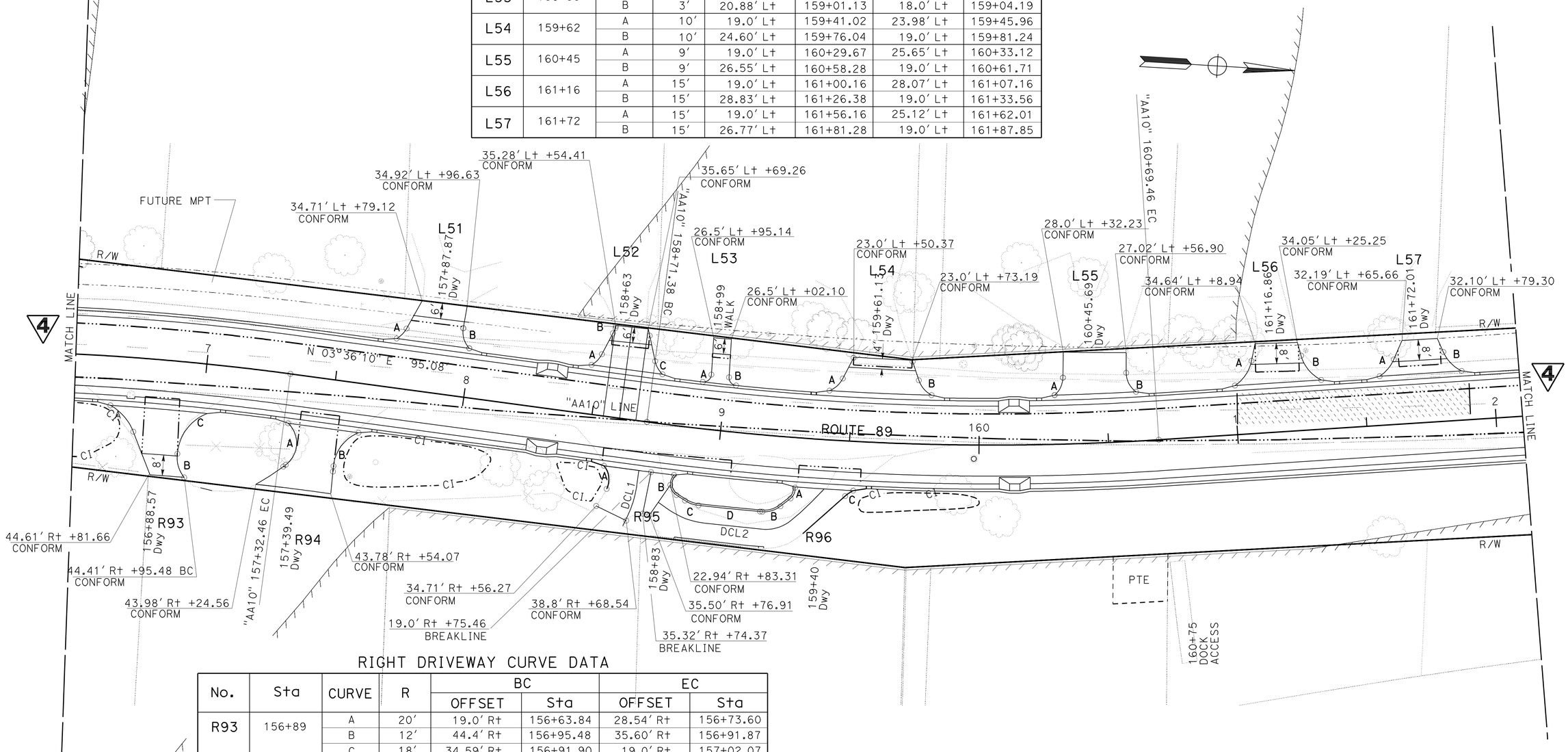

RIGHT DRIVEWAY CURVE DATA

No.	Sta	CURVE	R	BC OFFSET	BC Sta	EC OFFSET	EC Sta
R93	156+89	A	20′	19.0′ Rt	156+63.84	28.54′ Rt	156+73.60
		B	12′	44.4′ Rt	156+95.48	35.60′ Rt	156+91.87
		C	18′	34.59′ Rt	156+91.90	19.0′ Rt	157+02.07
R94	157+45	A	10.5′	19.00′ Rt	157+34.16	35.03′ Rt	157+35.34
		B	15.5′	33.05′ Rt	157+53.69	19.0′ Rt	157+61.56
R95	158+83	A	6′	17.00′ Rt	158+54.72	27.09′ Rt	158+59.63
		B	5.02′	19.1′ Rt	158+84.15	26.6′ Rt	158+85.99
		C	12′	28.3′ Rt	158+89.52	29.5′ Rt	158+94.71
		D	950′	29.55′ Rt	158+94.89	29.53′ Rt	159+17.78
R96	159+40	A	4.5′	23.53′ Rt	159+28.96	19.28′ Rt	159+30.31
		B	10′	29.53′ Rt	159+18.76	26.88′ Rt	159+25.38
		C	15′	21.27′ Rt	159+49.48	19.0′ Rt	159+52.39

2 REVISED PER ADDENDUM No. 2 DATED FEBRUARY 2, 2012

4 REVISED PER ADDENDUM No. 4 DATED MARCH 2, 2012

CONSTRUCTION DETAILS

SCALE: 1" = 20′

C-31

STATE OF CALIFORNIA - DEPARTMENT OF TRANSPORTATION
NORTH REGION DIVISION OF ENGINEERING
Caltrans

FUNCTIONAL SUPERVISOR: K. KEATON
CALCULATED-DESIGNED BY: N. BRUTON
CHECKED BY: K. KEATON
REVISED BY
DATE REVISED

LAST REVISION 00-00-00 | DATE PLOTTED => 01-MAR-2012 | TIME PLOTTED => 07:47

Dist	COUNTY	ROUTE	POST MILES TOTAL PROJECT	SHEET No.	TOTAL SHEETS
03	ED,Pla	89	27.2/27.4, 0.0/T8.5	93	499

REGISTERED CIVIL ENGINEER 1-17-12 DATE

8-29-11
PLANS APPROVAL DATE

REGISTERED PROFESSIONAL ENGINEER KEVIN F. LEE No. 78077 Exp. 9-30-13 CIVIL STATE OF CALIFORNIA

THE STATE OF CALIFORNIA OR ITS OFFICERS OR AGENTS SHALL NOT BE RESPONSIBLE FOR THE ACCURACY OR COMPLETENESS OF SCANNED COPIES OF THIS PLAN SHEET.

NOTE:

FOR ACCURATE RIGHT OF WAY DATA, CONTACT RIGHT OF WAY ENGINEERING AT THE DISTRICT OFFICE.

LEFT DRIVEWAY CURVE DATA

No.	Sta	CURVE	R	BC		EC	
				OFFSET	Sta	OFFSET	Sta
L58	162+49	A	15′	19.0′ Lt	162+30.03	26.91′ Lt	162+38.34
		B	15′	28.22′ Lt	162+57.61	19.0′ Lt	162+66.44
L59	163+39	A	10′	19.0′ Lt	163+28.22	27.98′ Lt	163+33.75
		B	15′	29.08′ Lt	163+47.54	19.0′ Lt	163+56.44

MP TRAIL CURVE DATA

CURVE	R	BC		EC	
		OFFSET	Sta	OFFSET	Sta
T1	1776.15′	30.16′ Lt	164+41.09	29.63 Lt	165+14.80
T2	1768.15′	22.07′ Lt	164+49.46	21.62′ Lt	165+16.62
T3	100′	29.63′ Lt	165+14.80	30.06′ Lt	165+23.97
T4	110′	21.62′ Lt	165+16.62	22.12′ Lt	165+26.92

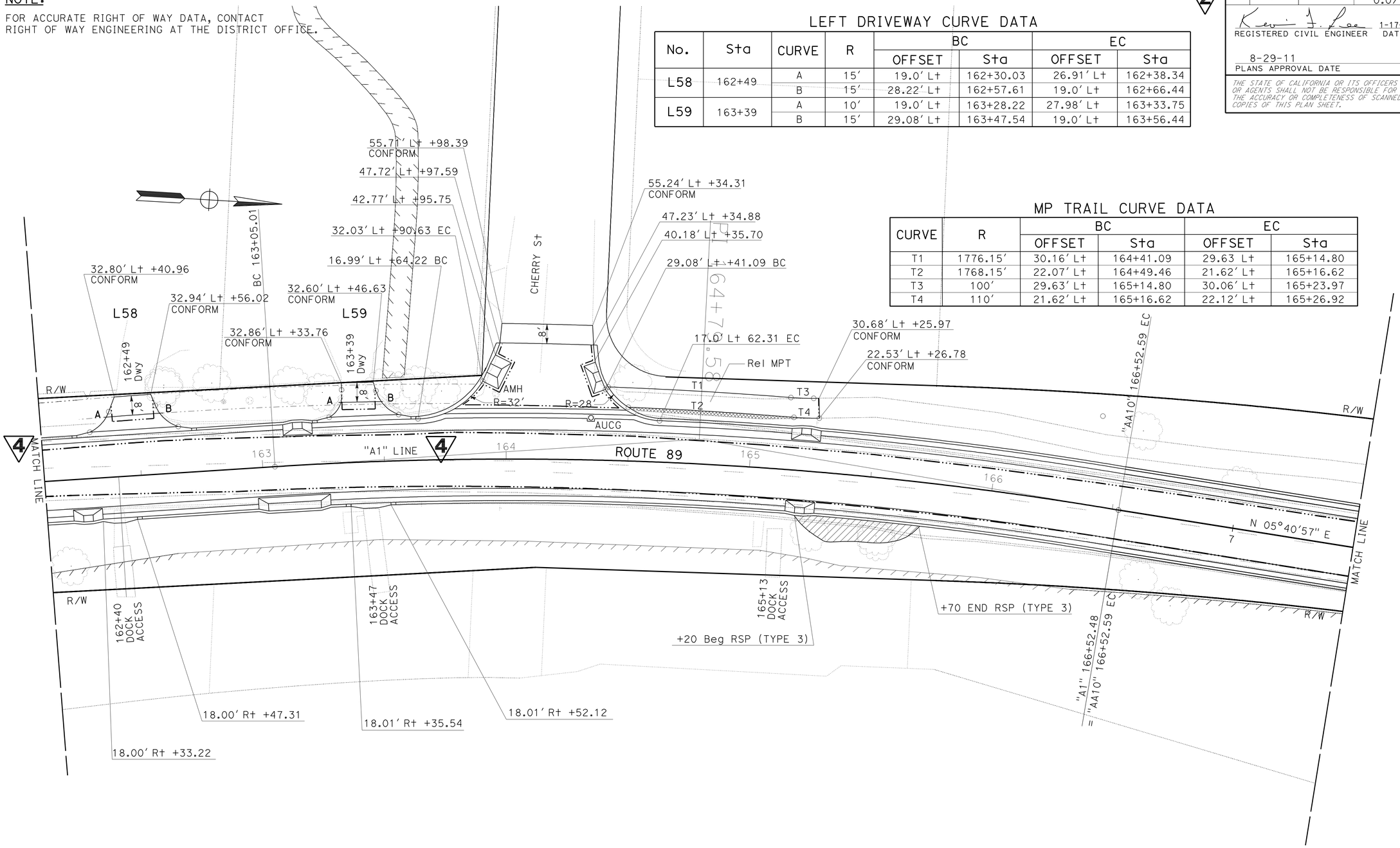

4 REVISED PER ADDENDUM No. 4 DATED MARCH 2, 2012

2 REVISED PER ADDENDUM No. 2 DATED FEBRUARY 2, 2012

CONSTRUCTION DETAILS

SCALE: 1" = 20′

C-32

STATE OF CALIFORNIA - DEPARTMENT OF TRANSPORTATION
NORTH REGION
DIVISION OF ENGINEERING

REVISED BY | DATE REVISED
N. BRUTON | K. KEATON
CALCULATED-DESIGNED BY | CHECKED BY
FUNCTIONAL SUPERVISOR: K. KEATON

LAST REVISION 00-00-00 | DATE PLOTTED => 01-MAR-2012 | TIME PLOTTED => 07:47

Dist	COUNTY	ROUTE	POST MILES TOTAL PROJECT	SHEET No.	TOTAL SHEETS
03	ED,Pla	89	27.2/27.4, 0.0/T8.5	260	499

Thomas R. Rutsch 2-24-11
REGISTERED CIVIL ENGINEER DATE

8-29-11
PLANS APPROVAL DATE

REGISTERED PROFESSIONAL ENGINEER T.K. RUTSCH No. 47797 Exp. 12-31-11 CIVIL STATE OF CALIFORNIA

THE STATE OF CALIFORNIA OR ITS OFFICERS OR AGENTS SHALL NOT BE RESPONSIBLE FOR THE ACCURACY OR COMPLETENESS OF SCANNED COPIES OF THIS PLAN SHEET.

DESIGN NOTES

DESIGN

BRIDGE DESIGN SPECIFICATIONS (1996 SIXTEENTH EDITION AASHTO WITH INTERIMS AND REVISIONS BY CALTRANS)

REINFORCED CONCRETE

F'C = 4000 PSI
FY = 60,000 PSI

REINFORCEMENT

ALL REINFORCEMENT SHALL BE EPOXY COATED.

STRUCTURAL STEEL

Fy = 36,000 psi

LOAD FACTORS AND LOAD COMBINATIONS

LOAD FACTOR DESIGN (LFD)

1.5 D + 1.5 E + 2.17 (L + I)

D = DEAD LOAD
E = LATERAL EARTH PRESSURE
L = LIVE LOAD
I = IMPACT

STRENGTH REDUCTION FACTORS, ø

REINFORCED CONCRETE:

FOR FLEXURE ..... ø = 0.90
FOR SHEAR ..... ø = 0.85

LOADING

DEAD LOAD:
INCLUDES 35 PSF FOR FUTURE WEARING SURFACE.

LIVE LOAD:
HS20-44 TRUCK, IMPACT = 30%
APPLY IMPACT ONLY TO THE ROOF SLAB AND STEEL HATCHES

EARTH LOAD:
EARTH PRESSURES FOR TWO CONDITIONS:
460 PSF VERTICAL, 138 PSF HORIZONTAL.

LEGEND

1. CAST IN PLACE STRUCTURAL CONCRETE.
2. OPTIONAL PRECAST OR CAST IN PLACE STRUCTURAL CONCRETE.

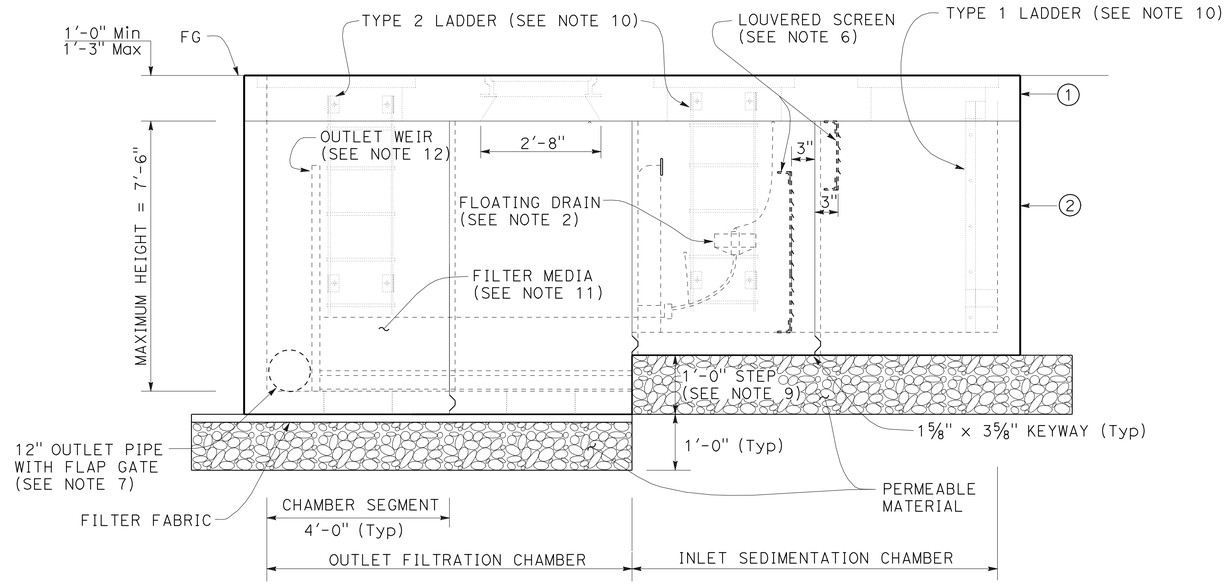

ELEVATION

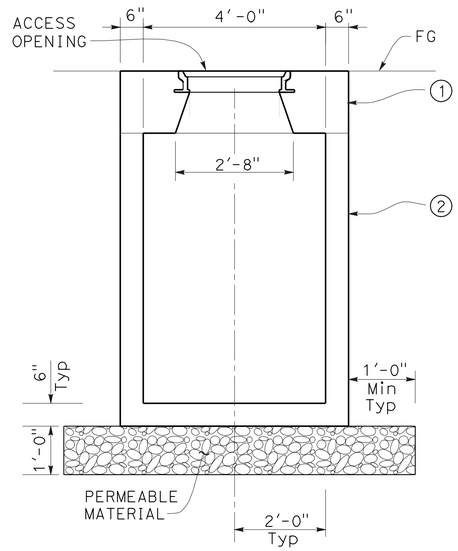

TYPICAL SECTION

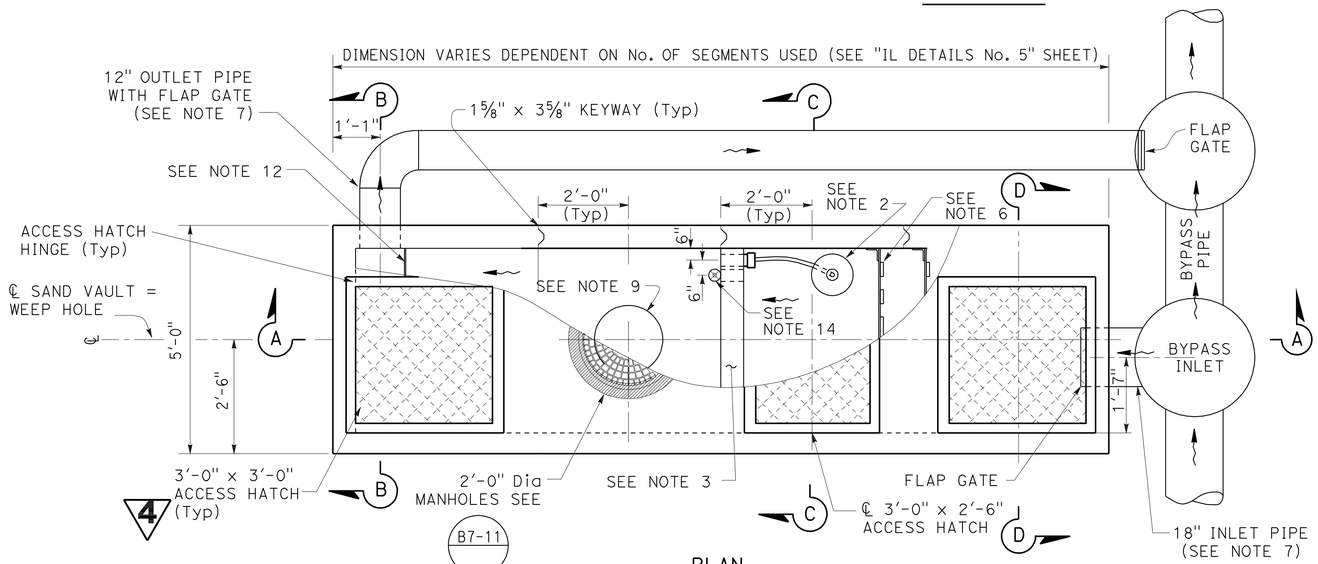

PLAN

NOTES:

1. DECK CONFIGURATION VARIES. SEE "IL DETAILS No. 5" SHEET. ACCESS HATCHES AND MANHOLES ARE TO BE SET FLUSH WITH DECK SLAB.
2. FLOATING DRAIN, SEE "SV DETAILS No. 1" SHEET.
3. CONCRETE OVERFLOW WEIR WITH STEEL WEIR PLATE. CONCRETE WEIR HEIGHT TO BE 3" ABOVE INLET FLOWLINE ELEVATION. STEEL WEIR PLATE TO BE SET TO 6" BELOW CONSTRUCTED BYPASS PIPE FLOWLINE ELEVATION AFTER SAND VAULT AND BYPASS PIPE ARE IN PLACE.
4. FOR SECTIONS A-A & B-B, SEE "IL DETAILS No. 3" SHEET.
5. FOR SECTIONS C-C & D-D, SEE "IL DETAILS No. 4" SHEET.
6. FOR LOUVERED SCREEN, SEE "SV DETAILS No. 2" SHEET.
7. FOR LOCATION, SIZE AND TYPE OF INLET AND OUTLET PIPES, SEE DRAINAGE PLANS AND PROFILES. OUTLET PIPE FLOWLINE SHALL MATCH VAULT FLOOR AT OUTLET.
8. FOR TYPICAL BLOCK-OUT AT DRAINAGE PIPE SEE "SV DETAILS No. 4" SHEET.
9. FOR LOCATIONS WITH WEEP HOLES IN OUTLET CHAMBER OR 1'-0" STEP, SEE "IL DETAILS No. 5" SHEET.
10. ONE TYPE 1 AND ONE TYPE 2 LADDER IN INLET CHAMBER. ONE TYPE 2 LADDER IN OUTLET CHAMBER. FOR TYPE 1 LADDER DETAILS, SEE Std PLAN D75C. FOR TYPE 2 LADDER DETAILS, SEE "SV DETAILS No. 3" SHEET. PLACE LADDERS ON EITHER END OR SIDE WALL TO AVOID INLET PIPE.
11. FILTER MEDIA, SEE "IL DETAILS No. 3" SHEET.
12. OUTLET WEIR, SEE "IL DETAILS No. 3" AND "SV DETAILS No. 2" SHEET.
13. STENCIL 4" HIGH NUMERALS AND 1"X4" INDICATOR LINES FOR EACH FOOT OF DEPTH ABOVE VAULT FLOOR ON EACH END OF INLET CHAMBER.
14. 4" GATE VALVE. FLOWLINE TO MATCH FLOWLINE OF FLOATING DRAIN OUTLET.
15. THE CONTRACTOR SHALL VERIFY ALL CONTROLLING FIELD DIMENSIONS BEFORE ORDERING OR FABRICATING ANY MATERIAL.

4 REVISED PER ADDENDUM No. 4 DATED MARCH 2, 2012

2 REVISED PER ADDENDUM No. 2 DATED FEBRUARY 2, 2012

SAND VAULT (IN-LINE)

IL DETAILS No. 1

DRAINAGE DETAILS

NO SCALE

DD-1

REVISED BY | DATE REVISED | CALCULATED-DESIGNED BY | CHECKED BY | FUNCTIONAL SUPERVISOR K. KEATON

STATE OF CALIFORNIA - DEPARTMENT OF TRANSPORTATION
NORTH REGION
DIVISION OF ENGINEERING
Caltrans

LAST REVISION 00-00-00 | DATE PLOTTED => 29-FEB-2012 | TIME PLOTTED => 14:59

Dist	COUNTY	ROUTE	POST MILES TOTAL PROJECT	SHEET No.	TOTAL SHEETS
03	ED,Pla	89	27.2/27.4, 0.0/T8.5	265	499

Thomas K. Rutsch 2-24-11
REGISTERED CIVIL ENGINEER DATE

8-29-11
PLANS APPROVAL DATE

REGISTERED PROFESSIONAL ENGINEER T.K. RUTSCH No. 47797 Exp. 12-31-11 CIVIL STATE OF CALIFORNIA

THE STATE OF CALIFORNIA OR ITS OFFICERS OR AGENTS SHALL NOT BE RESPONSIBLE FOR THE ACCURACY OR COMPLETENESS OF SCANNED COPIES OF THIS PLAN SHEET.

DESIGN NOTES

DESIGN

BRIDGE DESIGN SPECIFICATIONS (1996 SIXTEENTH EDITION AASHTO WITH INTERIMS AND REVISIONS BY CALTRANS)

REINFORCED CONCRETE

F'C = 4000 PSI
FY = 60,000 PSI

REINFORCEMENT

ALL REINFORCEMENT SHALL BE EPOXY COATED.

STRUCTURAL STEEL

Fy = 36,000 psi

LOAD FACTORS AND LOAD COMBINATIONS

LOAD FACTOR DESIGN (LFD)

1.5 D + 1.5 E + 2.17 (L + I)

D = DEAD LOAD
E = LATERAL EARTH PRESSURE
L = LIVE LOAD
I = IMPACT

STRENGTH REDUCTION FACTORS, Ø

REINFORCED CONCRETE:

FOR FLEXURE ..... Ø = 0.90
FOR SHEAR ..... Ø = 0.85

LOADING

DEAD LOAD:
INCLUDES 35 PSF FOR FUTURE WEARING SURFACE.

LIVE LOAD:
HS20-44 TRUCK, IMPACT = 30%
APPLY IMPACT ONLY TO THE ROOF SLAB AND STEEL HATCHES

EARTH LOAD:
EARTH PRESSURES FOR TWO CONDITIONS:
460 PSF VERTICAL, 138 PSF HORIZONTAL.

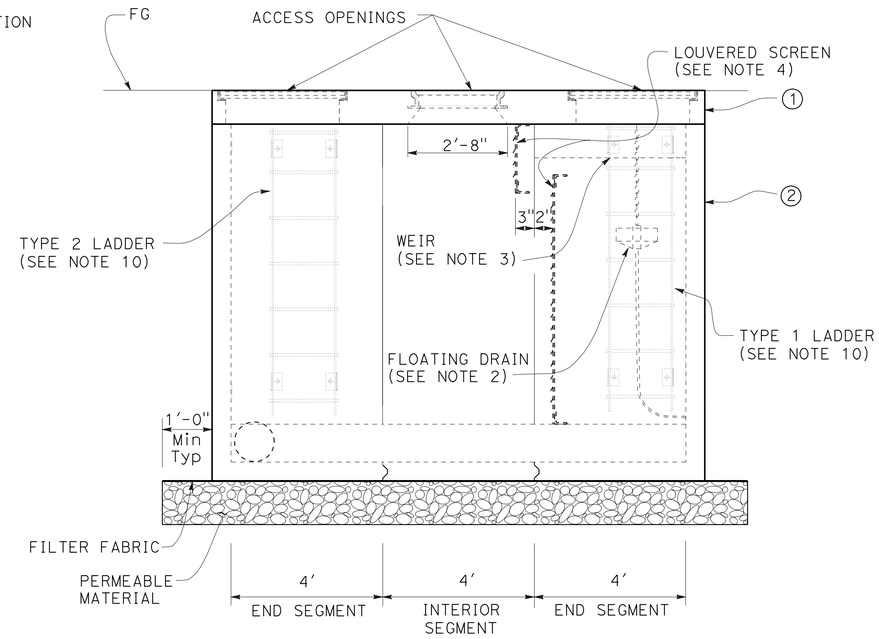

ELEVATION

LEGEND

① CAST IN PLACE STRUCTURAL CONCRETE.

② OPTIONAL PRECAST OR CAST IN PLACE STRUCTURAL CONCRETE.

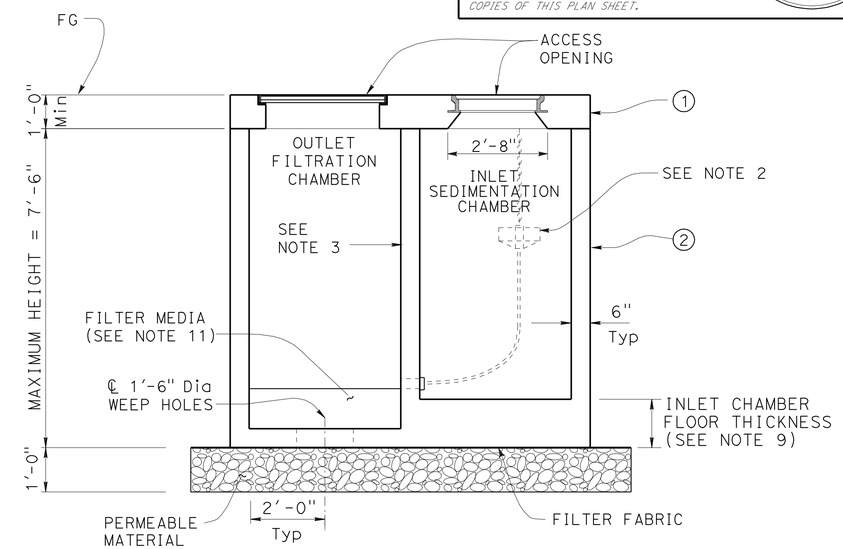

TYPICAL SECTION

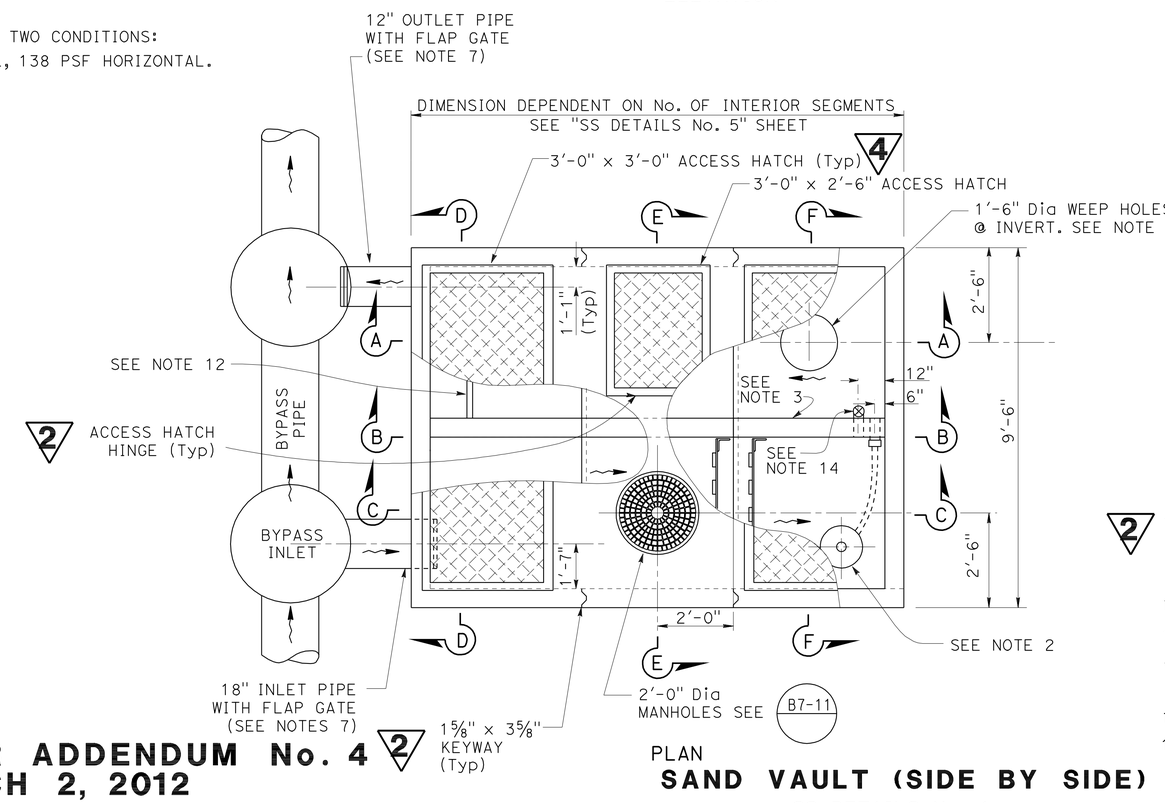

PLAN

SAND VAULT (SIDE BY SIDE)

SS DETAILS No. 1

NOTES:

1. DECK CONFIGURATION VARIES. SEE "SS DETAILS No. 5" SHEET. ACCESS HATCHES AND MANHOLES ARE TO BE SET FLUSH WITH DECK SLAB EXCEPT IN PAVED AREAS WHERE THEY ARE RECESSED ¼".
2. FLOATING DRAIN. SEE "SV DETAILS No. 1" SHEET.
3. CONCRETE OVERFLOW WEIR WITH STEEL WEIR PLATE. CONCRETE WEIR HEIGHT TO BE 3" ABOVE INLET FLOWLINE ELEVATION. STEEL WEIR PLATE TO BE SET TO 6" BELOW CONSTRUCTED BYPASS PIPE FLOWLINE ELEVATION AFTER SAND VAULT AND BYPASS PIPE ARE IN PLACE.
4. FOR LOUVERED SCREEN, SEE "SV DETAILS No. 2" SHEET.
5. FOR SECTIONS A-A, B-B & C-C SEE "SS DETAILS No. 3" SHEET.
6. FOR SECTIONS D-D, E-E & F-F SEE "SS DETAILS No. 4" SHEET.
7. FOR LOCATION, DIAMETER AND TYPE OF INLET AND OUTLET PIPES, SEE DRAINAGE PLANS AND PROFILES. OUTLET PIPE FLOWLINE SHALL MATCH VAULT FLOOR AT OUTLET.
8. FOR TYPICAL BLOCK-OUT AT DRAINAGE PIPE SEE "SV DETAILS No. 4" SHEET
9. FOR FLOOR THICKNESS AND LOCATIONS WITH WEEP HOLES IN OUTLET CHAMBER, SEE "SS DETAILS No. 5" SHEET.
10. ONE TYPE 1 LADDER AND ONE TYPE 2 LADDER IN INLET CHAMBER. ONE TYPE 2 LADDER IN OUTLET CHAMBER. FOR TYPE 1 LADDER, SEE Std PLAN D75C. FOR TYPE 2 LADDER, SEE "SV DETAILS No. 3" SHEET. PLACE LADDERS ON EITHER END OR SIDE WALL TO AVOID INLET/OUTLET PIPES. (2)
11. FILTER MEDIA, SEE "SS DETAILS No. 3" SHEET.
12. OUTLET WEIR, SEE "SS DETAILS No. 3" AND "SV DETAILS No. 2" SHEET.
13. STENCIL 4" HIGH NUMERALS AND 1" X 4" INDICATOR LINES FOR EACH FOOT OF DEPTH ABOVE VAULT FLOOR ON EACH END OF INLET CHAMBER.
14. 4" GATE VALVE. FLOWLINE TO MATCH FLOWLINE OF FLOATING DRAIN OUTLET.
15. THE CONTRACTOR SHALL VERIFY ALL CONTROLLING FIELD DIMENSIONS BEFORE ORDERING OR FABRICATING ANY MATERIAL.

(4) **REVISED PER ADDENDUM No. 4 DATED MARCH 2, 2012**

(2) **REVISED PER ADDENDUM No. 2 DATED FEBRUARY 2, 2012**

DRAINAGE DETAILS

NO SCALE **DD-6**

REVISED BY	DATE REVISED
TR	12/2009

CALCULATED-DESIGNED BY
CHECKED BY
FUNCTIONAL SUPERVISOR K. KEATON

STATE OF CALIFORNIA - DEPARTMENT OF TRANSPORTATION
Caltrans
NORTH REGION
DIVISION OF ENGINEERING

LAST REVISION 00-00-00
DATE PLOTTED => 29-FEB-2012
TIME PLOTTED => 14:56

Dist	COUNTY	ROUTE	POST MILES TOTAL PROJECT	SHEET No.	TOTAL SHEETS
03	ED,Pla	89	27.2/27.4, 0.0/T8.5	272	499

Thomas R. Rutsch 2-24-11
REGISTERED CIVIL ENGINEER DATE

8-29-11
PLANS APPROVAL DATE

REGISTERED PROFESSIONAL ENGINEER T.K. RUTSCH No. 47797 Exp. 12-31-11 CIVIL STATE OF CALIFORNIA

THE STATE OF CALIFORNIA OR ITS OFFICERS OR AGENTS SHALL NOT BE RESPONSIBLE FOR THE ACCURACY OR COMPLETENESS OF SCANNED COPIES OF THIS PLAN SHEET.

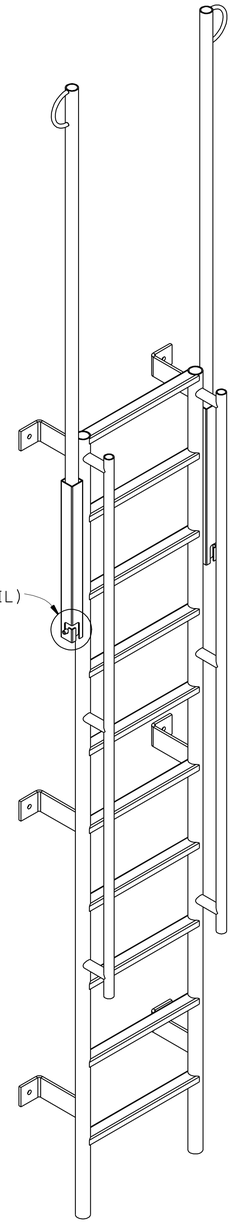

TYPE 2 LADDER

SCALE: 1" = 1'-0"

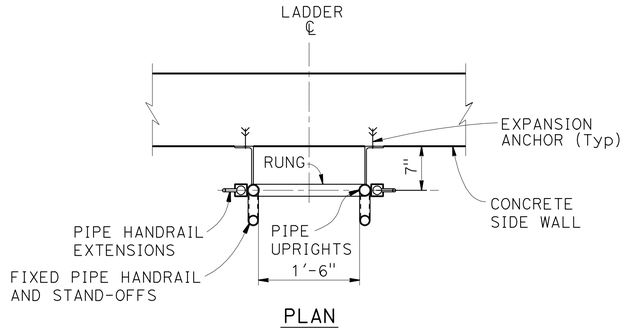

PLAN

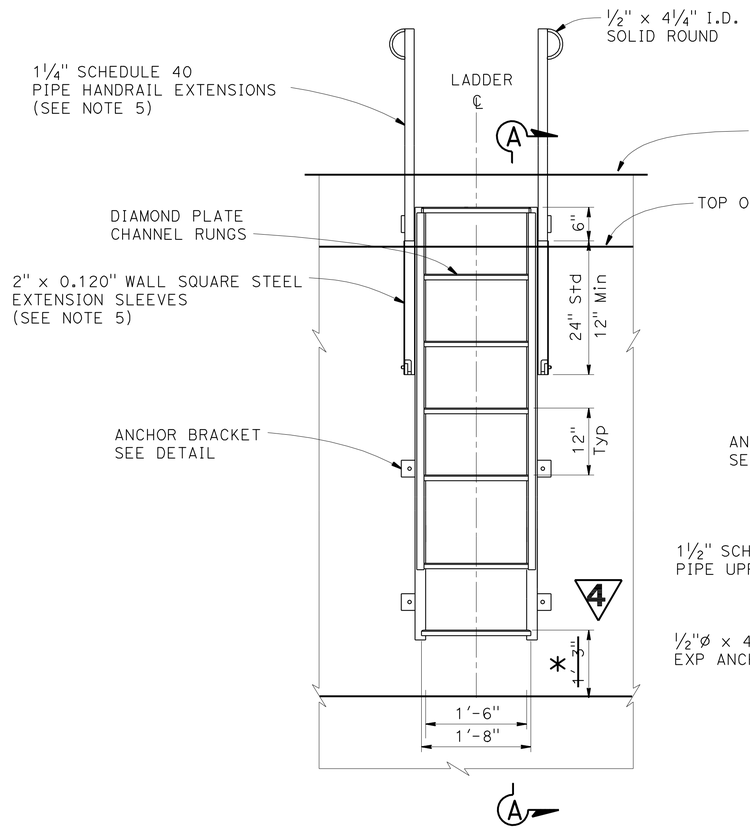

FRONT VIEW

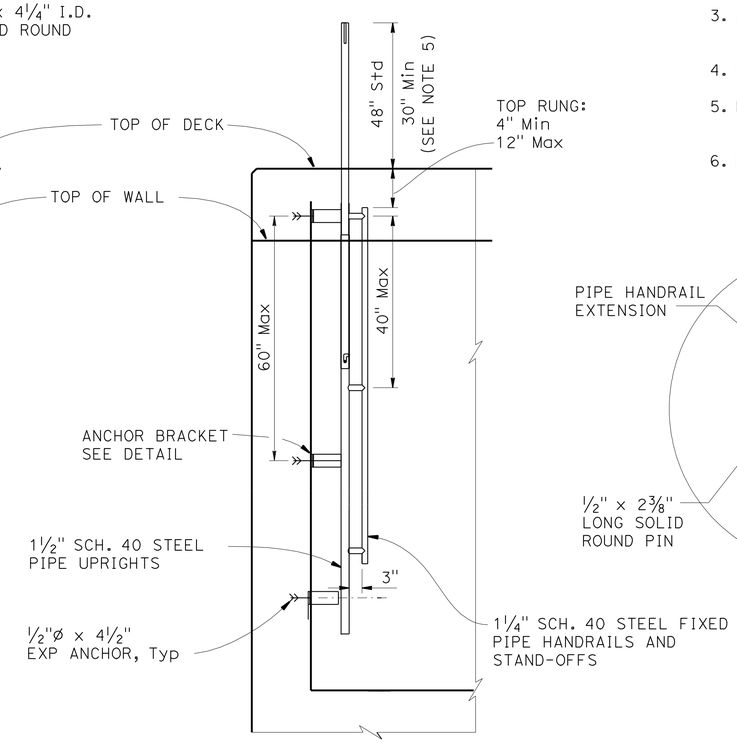

SECTION A-A

NOTES:

1. THE DISTANCE BETWEEN RUNGS SHALL NOT EXCEED 1'-0" AND SHALL BE UNIFORM THROUGHOUT THE HEIGHT OF WALL.
2. THE LADDER SHALL BE CONSTRUCTED IN ONE LENGTH. ALL CONNECTIONS SHALL BE WELDED.
3. ALL METAL PARTS SHALL BE GALVANIZED. ATTACHMENT HARDWARE SHALL BE STAINLESS STEEL.
4. GRIND EXPOSED CORNERS OF METAL PARTS TO 3/16" RADIUS.
5. REDUCED LENGTHS REQUIRED FOR VAULTS WITH INADEQUATE HEIGHT FOR STANDARD PIPE HANDRAIL EXTENSIONS.
6. LADDER SHALL BE PIPELINE PRODUCTS VL-100 OR EQUAL.

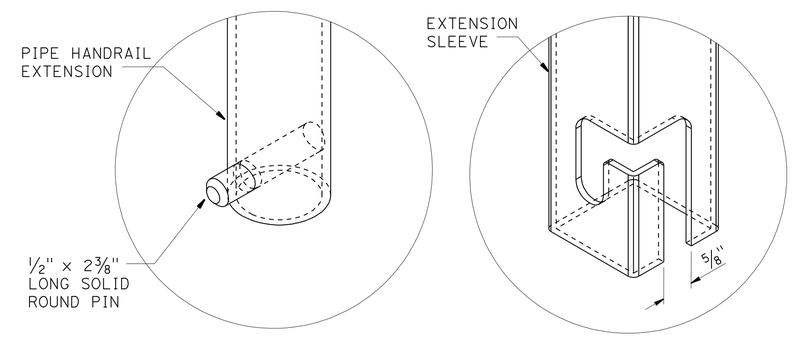

HANDRAIL LATCH

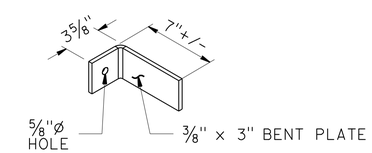

ANCHOR BRACKET DETAIL

4 * 1'-0" INLET CHAMBER
1'-3" OUYLET CHAMBER

4 **REVISED PER ADDENDUM No. 4 DATED MARCH 2, 2012**

SAND VAULT

SV DETAILS No. 3

DRAINAGE DETAILS

NO SCALE

DD-13

STATE OF CALIFORNIA - DEPARTMENT OF TRANSPORTATION
Caltrans
NORTH REGION
DIVISION OF ENGINEERING

FUNCTIONAL SUPERVISOR: K. KEATON
CALCULATED-DESIGNED BY: T. RUTSCH
CHECKED BY: K. KEATON
REVISED BY
DATE REVISED

LAST REVISION 00-00-00 | DATE PLOTTED => 29-FEB-2012 | TIME PLOTTED => 14:37

Dist	COUNTY	ROUTE	POST MILES TOTAL PROJECT	SHEET No.	TOTAL SHEETS
03	ED,Pla	89	27.2/27.4, 0.0/T8.5	276	499

Thomas K. Rutsch 2-24-11
REGISTERED CIVIL ENGINEER DATE

8-29-11
PLANS APPROVAL DATE

REGISTERED PROFESSIONAL ENGINEER T.K. RUTSCH No. 47797 Exp. 12-31-11 CIVIL STATE OF CALIFORNIA

THE STATE OF CALIFORNIA OR ITS OFFICERS OR AGENTS SHALL NOT BE RESPONSIBLE FOR THE ACCURACY OR COMPLETENESS OF SCANNED COPIES OF THIS PLAN SHEET.

4

NOTES:

1. SEE DRAINAGE PROFILES FOR FLOWLINE ELEVATIONS, INLET TYPE AND "H", AND GRATE STATION, OFFSET AND ELEVATION.
2. CONNECTING PIPE ELEVATIONS EQUAL THE OUTLET PIPE ELEVATION, UNLESS OTHERWISE SHOWN.
3. MAY SUBSTITUTE CSP (0.109" THICK).
4. LIFTING ROD AND WIRE MESH SHALL BE TYPE 316 OR 304 STAINLESS STEEL.

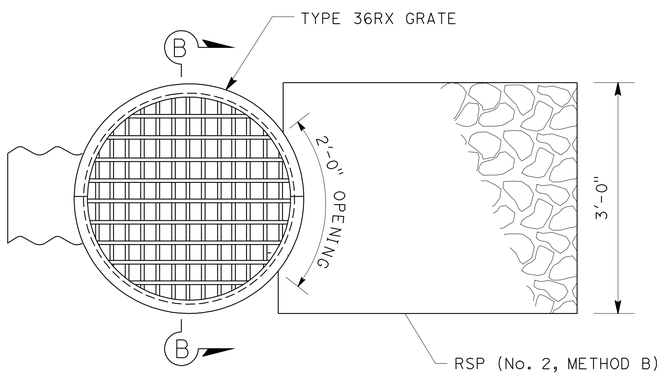

PARTIAL PLAN

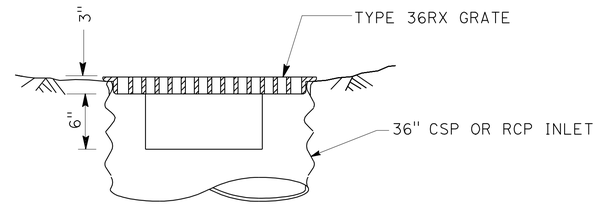

SECTION B-B

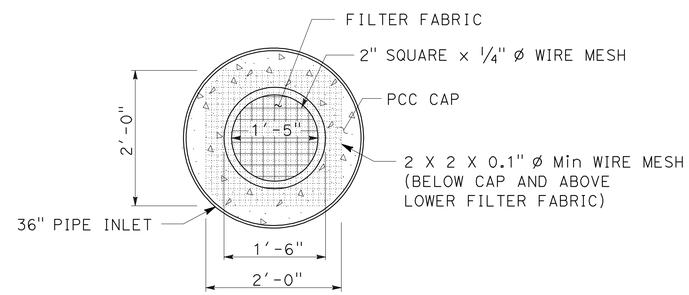

SECTION A-A

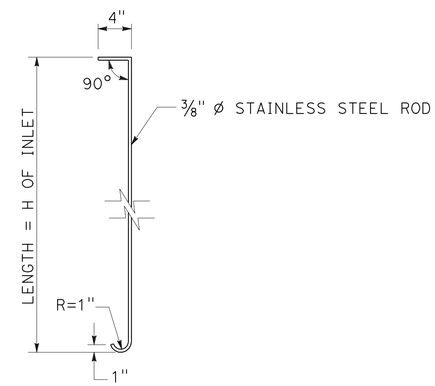

LIFTING ROD

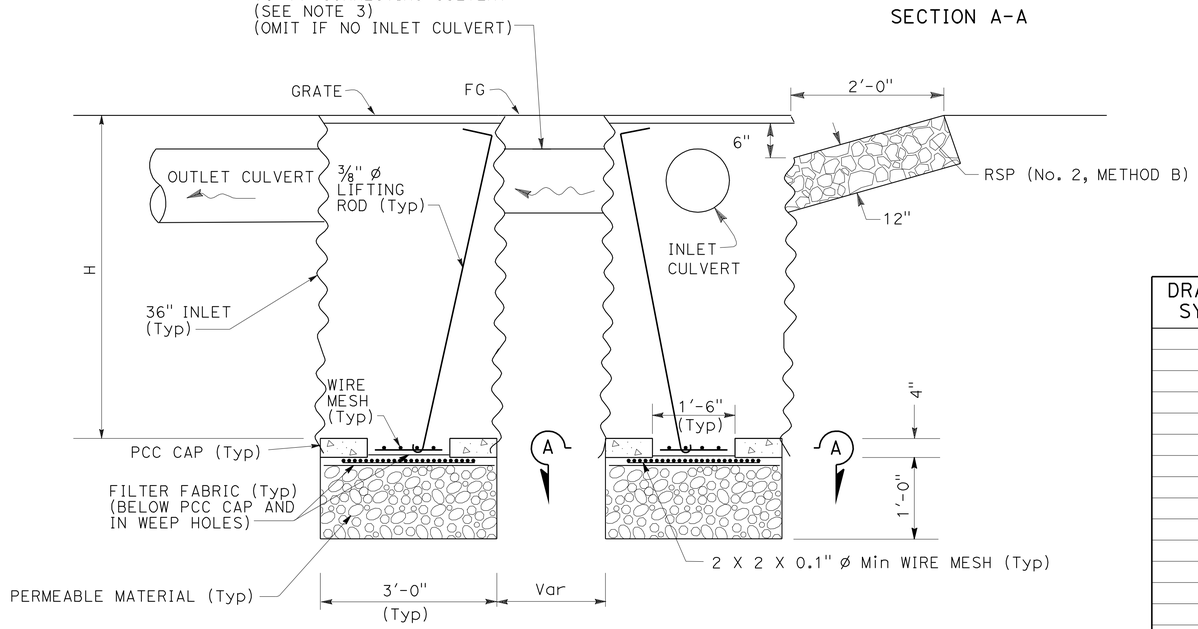

ELEVATION

SAND TRAP (TYPE PI)

(DOUBLE SHOWN, TRIPLE, QUAD SIMILAR)

SAND TRAP (TYPE PI)

DRAINAGE SYSTEM	DRAINAGE UNIT	GMP/GCP	PI TYPE
1	s	GCP	TRIPLE
3	q	GCP	DOUBLE
4	t	GMP	DOUBLE
7	q	GMP	OCTUPLE
29	n	GMP	DOUBLE
31	u	GMP	QUAD
35	e	GMP	TRIPLE
37	c	GMP	TRIPLE
37	e	GMP	TRIPLE
57	a	GCP	TRIPLE
75	l	GCP	TRIPLE
76	i	GCP	TRIPLE
79	f	GMP	DOUBLE
79	h	GMP	TRIPLE
80	e	GCP	DOUBLE
84	a	GCP	QUAD
106	a	GMP	DOUBLE

4 **REVISED PER ADDENDUM No. 4 DATED MARCH 2, 2012**

DRAINAGE DETAILS

NO SCALE

DD-17

REVISED BY | DATE REVISED
T. RUTSCH | K. KEATON
CALCULATED-DESIGNED BY | CHECKED BY
FUNCTIONAL SUPERVISOR: K. KEATON

STATE OF CALIFORNIA - DEPARTMENT OF TRANSPORTATION
NORTH REGION
DIVISION OF ENGINEERING
Caltrans

LAST REVISION 00-00-00 | DATE PLOTTED => 01-MAR-2012 | TIME PLOTTED => 10:58

Dist	COUNTY	ROUTE	POST MILES TOTAL PROJECT	SHEET No.	TOTAL SHEETS
03	ED,Pla	89	27.2/27.4, 0.0/T8.5	285	499

Thomas K. Rutsch 2-24-11
REGISTERED CIVIL ENGINEER DATE

8-29-11
PLANS APPROVAL DATE

REGISTERED PROFESSIONAL ENGINEER T.K. RUTSCH No. 47797 Exp. 12-31-11 CIVIL STATE OF CALIFORNIA

THE STATE OF CALIFORNIA OR ITS OFFICERS OR AGENTS SHALL NOT BE RESPONSIBLE FOR THE ACCURACY OR COMPLETENESS OF SCANNED COPIES OF THIS PLAN SHEET.

MARKER (CULVERT)

DRAINAGE SYSTEM No.	STATION	NUMERAL ON TARGET PLATE	LOCATION FNBT EA	LOCATION FSBT EA
1	420+00	0.00	1	1
1	1+10	0.02	1	1
3	17+65	0.33	1	1
4	22+60	0.43	1	1
4	23+00	0.44	1	1
7	39+70	0.75	1	1
8	41+40	0.78	1	1
9	41+80	0.79	1	1
10	44+20	0.83	1	1
10	47+90	0.91	1	1
11	59+85	1.13	1	1
12	59+90	1.13	1	1
13	63+50	1.20	1	1
13	65+00	1.24	1	1
14	71+10	1.35	1	1
14	72+70	1.38	1	1
16	77+65	1.47	1	1
17	79+65	1.51	1	1
18	79+80	1.51	1	1
19	81+30	1.54	1	1
20	83+00	1.57	1	1
21	86+45	1.64	1	1
22	91+60	1.73	1	1
23	97+20	1.84	1	1
24	97+60	1.85	1	1
25	100+70	1.91	1	1
26	100+90	1.91	1	1
27	103+60	1.96	1	1
28	104+70	1.98	1	1
28	106+20	2.01	1	1
29	111+70	2.12	1	1
31	124+90	2.37	1	1
31	127+15	2.41	1	1
33	132+90	2.52	1	1
33	136+70	2.59	1	1
33	137+15	2.60	1	1
33	138+35	2.62	1	1
34	143+65	2.72	1	1
35	146+60	2.78	1	1
37	150+45	2.85	1	1
38	158+35	3.00	1	1
SUBTOTAL A			41	41

MARKER (CULVERT)

DRAINAGE SYSTEM No.	STATION	NUMERAL ON TARGET PLATE	LOCATION FNBT EA	LOCATION FSBT EA
41	160+15	3.03	1	1
42	160+70	3.04	1	1
46	163+60	3.10	1	1
46	163+95	3.11	1	1
47	163+15	3.09	1	1
47	165+20	3.13	1	1
48	168+20	3.19	1	1
49	169+00	3.20	1	1
50	171+75	3.25	1	1
51	173+00	3.28	1	1
52	176+00	3.33	1	1
54	193+00	3.66	1	1
55	195+15	3.69	1	1
56	196+50	3.72	1	1
58	220+45	4.18	1	1
58	226+40	4.29	1	1
59	226+85	4.30	1	1
60	231+75	4.39	1	1
61	236+90	4.49	1	1
62	240+20	4.55	1	1
63	248+30	4.70	1	1
64	259+45	4.91	1	1
67	265+80	5.03	1	1
68	277+25	5.25	1	1
69	283+90	5.38	1	1
70	287+15	5.44	1	1
72	289+85	5.49	1	1
74	293+75	5.56	1	1
75	293+80	5.56	1	1
78	317+70	6.02	1	1
79	322+00	6.10	1	1
81	327+60	6.20	1	1
82	328+80	6.23	1	1
83	332+95	6.31	1	1
87	346+15	6.56	1	1
88	347+00	6.57	1	1
88	349+60	6.62	1	1
88	353+85	6.68	1	1
88	355+80	6.74	1	1
98	391+40	7.41	1	1
99	391+45	7.41	1	1
100	400+80	7.59	1	1
104	414+75	7.86	1	1
104	419+05	7.94	1	1
104	423+45	8.02	1	1
104	426+90	8.09	1	1
105	445+40	8.44	1	1
SUBTOTAL B			47	47
SUBTOTAL A			41	41
TOTAL			88	88
GRAND TOTAL			176	

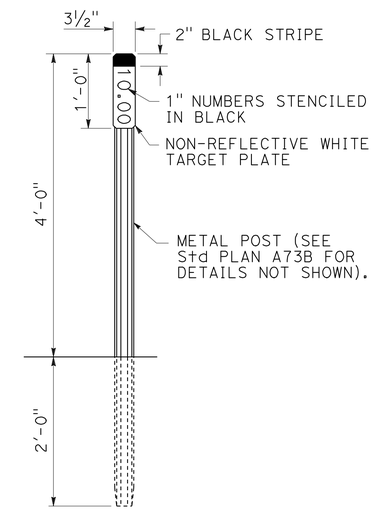

MARKER (CULVERT)

NOTE: EXACT LOCATION TO BE DETERMINED BY THE ENGINEER.

4 DRAINAGE INLET MARKER

STATION	DRAINAGE INLET MARKER EA
"A2" 415+40 TO "A1" 443+33	321
TOTAL	321

NOTE: DRAINAGE INLET MARKERS TO BE PLACED AT ALL DRAINAGE INLETS AND SAND TRAPS EXCEPT GMP(MOD) INLET AND SAND TRAP (TYPE PI). TYPE OF MARKER SHALL BE STAMPED CONCRETE IMPRINT.

4 REVISED PER ADDENDUM No. 4 DATED MARCH 2, 2012

THIS PLAN ACCURATE FOR DRAINAGE WORK ONLY

DRAINAGE DETAILS

NO SCALE

DD-26

STATE OF CALIFORNIA - DEPARTMENT OF TRANSPORTATION
Caltrans
NORTH REGION
DIVISION OF ENGINEERING

FUNCTIONAL SUPERVISOR: K. KEATON
CALCULATED-DESIGNED BY
CHECKED BY
REVISED BY
DATE REVISED

LAST REVISION 00-00-00
DATE PLOTTED => 01-MAR-2012
TIME PLOTTED => 07:52

Dist	COUNTY	ROUTE	POST MILES TOTAL PROJECT	SHEET No.	TOTAL SHEETS
03	ED,Pla	89	27.3/27.4, 0.0/T8.5	327	499

Thomas K. Rutsch 2-24-11
REGISTERED CIVIL ENGINEER DATE

8-29-11
PLANS APPROVAL DATE

REGISTERED PROFESSIONAL ENGINEER T.K. RUTSCH No. 47797 Exp. 12-31-11 CIVIL STATE OF CALIFORNIA

THE STATE OF CALIFORNIA OR ITS OFFICERS OR AGENTS SHALL NOT BE RESPONSIBLE FOR THE ACCURACY OR COMPLETENESS OF SCANNED COPIES OF THIS PLAN SHEET.

DRAINAGE PLAN SHEET No.	DRAINAGE SYSTEM No.	DRAINAGE UNIT	CSPA 35" x 24" CSPA (0.109" THICK)	CSPA 60" x 34" CSPA (0.109" THICK)	CSPA 42" x 29" CSPA (0.109" THICK)	CFES 15" CFES	CFES 18" CFES	CFES 24" CFES	(N) MINOR CONCRETE (BACKFILL)	CONCRETE INVERT PAVING	(N) MANHOLE FRAME AND COVER	SAND VAULT FURNISH PRECAST SAND VAULT	SAND VAULT INSTALL PRECAST SAND VAULT	SAND VAULT STRUCTURAL CONCRETE, SAND COLLECTION VAULT	SAND VAULT BAR REINFORCING STEEL (EPOXY COATED)	SAND VAULT STRUCTURE EXCAVATION (SAND VAULT)	SAND VAULT STRUCTURE EXCAVATION (TYPE D)	SAND VAULT STRUCTURE BACKFILL (SAND VAULT)	SAND VAULT FILTER MEDIA	36" PRECAST CONCRETE PIPE INLET	36" CORRUGATED STEEL PIPE INLET (0.109" THICK)	MINOR CONCRETE (MINOR STRUCTURE)	(N) HEIGHT OF INLET	MISCELLANEOUS IRON & STEEL	(N) 12" FLAP GATE	PERMEABLE MATERIAL	RED * RSP (LIGHT, METHOD B)	RED * RSP (1/4 TON, METHOD B)	RED * RSP (BACKING No. 2, METHOD B)	FILTER FABRIC *	STATION	DRAINAGE SYSTEM No.	DRAINAGE UNIT
			LF	LF	LF	EA	EA	EA	LF	CY	EA	EA	EA	CY	LB	CY	CY	CY	CY	LF	LF	CY	LF	LB	EA	CY	CY	CY	CY	SQYD			
D-8	51	a																													"A1"173+02.91	51	a
		b																															b
		c																															c
		d																															d
		e																															e
		f																															f
		g					1.0																										g
		h																															h
		i					1.0																										i
D-8	52	a																				0.92	2.50	202							"A1"174+79.15	52	a
		b							100.6																								b
		c																				3.57	5.00	606		2.9				8.6			c
		d							9.0																								d
		e							150.0																								e
		f																				2.79	3.5	606		2.9				8.6			f
		g																															g
		h																		5.3		0.28	4.80	215									h
		i																															i
		j																															j
		k																				0.92	2.50	202									k
		l																			3.4	0.24	2.9	215									l
		m																															m
		n							113.8																								n
		o																				0.92	2.50	202									o
		p							95.0																								p
		q																				0.92	2.50	202									q
		r																			3.8	0.24	3.3	215									r
		s																															s
		t							130.4													1.43	2.4										t
		u																				~~0.92~~	~~2.50~~	~~202~~ 391									u
		v							250.8																								v
		w																				1.46	2.50	~~202~~ 391									w
		ss																				~~1.46~~	~~2.50~~	~~202~~ 391									ss
																						1.49	2.6										
SHEET TOTAL							2.0		849.6											5.3	7.2	~~14.6~~ 15.18	4	~~3271~~ 3838		5.8				17.2			

* FOR QUANTITY TOTAL, SEE ROCK SLOPE PROTECT TABLE ON SUMMARY OF QUANTITIES.
(N) NOT A SEPARATE PAY ITEM, FOR INFORMATION ONLY.

4 **REVISED PER ADDENDUM No. 4 DATED MARCH 2, 2012**

DRAINAGE QUANTITIES
DQ-42

STATE OF CALIFORNIA - DEPARTMENT OF TRANSPORTATION
Caltrans
NORTH REGION
DIVISION OF ENGINEERING

FUNCTIONAL SUPERVISOR: K. KEATON
CALCULATED-DESIGNED BY: K. SERAN
CHECKED BY: V. LAO
REVISED BY
DATE REVISED

LAST REVISION 00-00-00
DATE PLOTTED => 29-FEB-2012
TIME PLOTTED => 15:04

Dist	COUNTY	ROUTE	POST MILES TOTAL PROJECT	SHEET No.	TOTAL SHEETS
03	ED,Pla	89	27.3/27.4, 0.0/T8.5	330	499

REGISTERED CIVIL ENGINEER 2-24-11 DATE

8-29-11
PLANS APPROVAL DATE

REGISTERED PROFESSIONAL ENGINEER T.K. RUTSCH No. 47797 Exp. 12-31-11 CIVIL STATE OF CALIFORNIA

THE STATE OF CALIFORNIA OR ITS OFFICERS OR AGENTS SHALL NOT BE RESPONSIBLE FOR THE ACCURACY OR COMPLETENESS OF SCANNED COPIES OF THIS PLAN SHEET.

DRAINAGE PLAN SHEET No.	DRAINAGE SYSTEM No.	DRAINAGE UNIT	ABANDON CULVERT	SAND BACKFILL	REMOVE CULVERT	REMOVE INLET	REMOVE FES	REMOVE HEADWALL	ADJUST INLET	CAP INLET	MODIFY INLET	UNDER-DRAIN: 12" PERFORATED PLASTIC PIPE	UNDER-DRAIN: 18" PERFORATED PLASTIC PIPE	PRECAST CONCRETE BOX CULVERT	PLASTIC PIPE: 12" PLASTIC PIPE	PLASTIC PIPE: 15" PLASTIC PIPE	PLASTIC PIPE: 18" PLASTIC PIPE	PLASTIC PIPE: 24" PLASTIC PIPE	PLASTIC PIPE: 30" PLASTIC PIPE	PLASTIC PIPE: 36" PLASTIC PIPE	CSP: 24" CSP (0.109" THICK)	CURED-IN-PLACE PIPELINER: 24" CIPP	CURED-IN-PLACE PIPELINER: 30" CIPP	CURED-IN-PLACE PIPELINER: 42" x 29" CIPP	CURED-IN-PLACE PIPELINER: 45" x 24" CIPP	CURED-IN-PLACE PIPELINER: 60" x 34" CIPP	CLEANING, INSPECTING AND PREPARING HOST PIPE	DESCRIPTION	STATION	DRAINAGE SYSTEM No.	DRAINAGE UNIT
			EA	CY	LF	EA	EA	EA	EA	EA	EA	LF	LF	LF	LF	LF	LF	LF	LF	LF	LF	LF	LF	LF	LF	LF	LF				
	55	k																										G3 INLET GRATE TYPE 24-10C	"A1"198+30.73	55	k
		l														162.8												15" x 162.8' PP w/Conc BACKFILL			l
		m																										G3 INLET GRATE TYPE 24-10C			m
		n															61.0											18" x 61.0' PP w/Conc BACKFILL			n
		o																										GCP (H=3.4) GRATE TYPE 36RX			o
		p															6.3											18" x 6.3' PP w/Conc BACKFILL			p
		q																										18" CFES			q
		r																										G4 (Mod) INLET GRATE TYPE ~~18-10C~~ 18-8C			r
		s													62.3													12" x 62.3' PP	4		s
		t																										G4 (Mod) INLET GRATE TYPE ~~18-10C~~ 18-8C			t
		u														11.7												15" x 11.7' PP w/Conc BACKFILL			u
D-9	54	a																										ST (TYPE GT4-3G) GRATE TYPE 24-10C	"A1"192+88.92	54	a
		b	1	14.1																								ABANDON Culv 24" x 120.8' CSP			b
		c			56.0																							REMOVE Culv 58" x 32" x 56' CSP			c
		d																										HEADWALL (H=3'-8")			d
		e																122.4										2-24" x 61.2' PP			e
		f																										HW			f
		g																										RED			g
		h													13.9													12" x 13.9' PP w/90° ELBOW			h
D-9	56	a			37.8																							REMOVE Culv 30" x 37.8' CSP	"A1"196+49.55	56	a
		b																										HEADWALL (H=4'-2")			b
		c																										35" x 24" x 46.8' CMPA			c
		d				1																						REMOVE INLET			d
		e			158.7																							REMOVE Culv 30" x 158.7' CSP			e
		f																										35" x 24" x 158.7' CSPA			f
		g																										G2 INLET			g
	57	a																										ST (TYPE PI-TRIPLE), GCP INLET	"A1"207+29.55	57	a
D-10	58	a																										G3 INLET GRATE TYPE 24-10C	"A1"218+26.22	58	a
		b														92.3												15" x 92.3' PP w/Conc BACKFILL			b
		c																										G3 INLET GRATE TYPE 24-10C			c
		d														121.1												15" x 121.1' PP w/Conc BACKFILL			d
		e																										G3 INLET GRATE TYPE 24-10C			e
		f																										G3 INLET GRATE TYPE 24-10C			f
		g															31.0											18" x 31.0' PP w/Conc BACKFILL			g
SHEET TOTAL			1	14.1	252.5	1									76.2	387.9	98.3	122.4													

4 REVISED PER ADDENDUM No. 4 DATED MARCH 2, 2012

DRAINAGE QUANTITIES

DQ-45

REVISED BY | DATE REVISED
K. SERAN | V. LAO
CALCULATED-DESIGNED BY | CHECKED BY
FUNCTIONAL SUPERVISOR
K. KEATON

STATE OF CALIFORNIA - DEPARTMENT OF TRANSPORTATION
Caltrans
NORTH REGION
DIVISION OF ENGINEERING

LAST REVISION 00-00-00 | DATE PLOTTED => 29-FEB-2012 | TIME PLOTTED => 15:04

Dist	COUNTY	ROUTE	POST MILES TOTAL PROJECT	SHEET No.	TOTAL SHEETS
03	ED,Pla	89	27.2/27.4, 0.0/T8.5	341	499

Thomas K. Rutsch 2-24-11
REGISTERED CIVIL ENGINEER DATE

8-29-11
PLANS APPROVAL DATE

REGISTERED PROFESSIONAL ENGINEER T.K. RUTSCH No. 47797 Exp. 12-31-11 CIVIL STATE OF CALIFORNIA

THE STATE OF CALIFORNIA OR ITS OFFICERS OR AGENTS SHALL NOT BE RESPONSIBLE FOR THE ACCURACY OR COMPLETENESS OF SCANNED COPIES OF THIS PLAN SHEET.

4 REVISED PER ADDENDUM No. 4 DATED MARCH 2, 2012

DRAINAGE PLAN SHEET No.	DRAINAGE SYSTEM No.	DRAINAGE UNIT	CSPA 35" x 24" CSPA (0.109" THICK)	CSPA 60" x 34" CSPA (0.109" THICK)	CSPA 42" x 29" CSPA (0.109" THICK)	CFES 15" CFES	CFES 18" CFES	CFES 24" CFES	(N) MINOR CONCRETE (BACKFILL)	CONCRETE INVERT PAVING	(N) MANHOLE FRAME AND COVER	SAND VAULT FURNISH PRECAST SAND VAULT	SAND VAULT INSTALL PRECAST SAND VAULT	SAND VAULT STRUCTURAL CONCRETE SAND COLLECTION VAULT	SAND VAULT BAR REINFORCING STEEL (EPOXY COATED)	SAND VAULT STRUCTURE EXCAVATION (SAND VAULT)	SAND VAULT STRUCTURE EXCAVATION (TYPE D)	SAND VAULT STRUCTURE BACKFILL (SAND VAULT)	SAND VAULT FILTER MEDIA	36" PRECAST CONCRETE PIPE INLET	36" CORRUGATED STEEL PIPE INLET (0.109" THICK)	MINOR CONCRETE (MINOR STRUCTURE)	(N) HEIGHT OF INLET	MISCELLANEOUS IRON & STEEL	(N) 12" FLAP GATE	PERMEABLE MATERIAL	RED * RSP (LIGHT, METHOD B)	RED * RSP (1/4 TON, METHOD B)	RED * RSP (BACKING No. 2, METHOD B)	FILTER FABRIC *	STATION	DRAINAGE SYSTEM No.	DRAINAGE UNIT
			LF	LF	LF	EA	EA	EA	LF	CY	EA	EA	EA	CY	LB	CY	CY	CY	CY	LF	LF	CY	LF	LB	EA	CY	CY	CY	CY	SQYD			
D-12	64	a																				3.57	5.00	606		2.9				8.6	"A1"256+35.01	64	a
		b							160.9																								b
		c																				4.74	5.00	404		2.8				9.1			c
		d							94.0																								d
		e																				1.17	2.70	202									e
		f																				1.17	2.70	202									f
		g							38.0																								g
		h																															h
		i																		4.40		0.28	3.90	215									i
		j																															j
		k									1									3.2		0.28	2.70	235									k
		l																															l
		m									1							2			4.40	0.3	3.90	235	1								m
		n																															n
		o										1	1	8.3	4679		70.0 ~~73.5~~	21.1 ~~44.4~~	3.9								8.4			49.9			o
		p																															p
		q																								1.9				2.2			q
		r					1																										r
		s																										32.0		58.7			s
	67	kk																														67	kk
D-12		a																															a
		b																															b
		c																				3.57	5.0	606		2.9				8.6	"A1"261+85.29		c
		d							138.2																								d
		e																				4.74	5.0	404		2.8				9.1			e
		f							144.9																								f
		g																				4.74	5.0	404		2.8				9.1			g
		h							89.7													~~3.57~~	~~5.0~~	~~606~~									h
		i																				3.57	5.0	606		2.9				8.6			i
		j																				0.92	2.50	202	4	~~2.9~~							j
		k							195.6																								k
		l																				1.88	2.60	404									l
		m							~~30.0~~ 76.0		4											~~1.88~~		~~404~~									m
		jj																		5.5		0.28	5.0	235									jj
SHEET TOTAL							1		~~899.3~~ 937.3			1	1	8.3	4679		~~73.5~~ 70.0	~~44.4~~ 21.1	3.9	13.1	4.40	30.41		4758	1	19.0	8.4	32.0		163.9			

* FOR QUANTITY TOTAL, SEE ROCK SLOPE PROTECT TABLE ON SUMMARY OF QUANTITIES.

(N) NOT A SEPARATE PAY ITEM, FOR INFORMATION ONLY.

2 REVISED PER ADDENDUM No. 2 DATED FEBRUARY 2, 2012

DRAINAGE QUANTITIES

DQ-56

STATE OF CALIFORNIA - DEPARTMENT OF TRANSPORTATION
Caltrans OFFICE OF PROJECT MANAGEMENT B
NORTH REGION
TAHOE TEAM BRANCH 2

FUNCTIONAL SUPERVISOR: K. KEATON
CALCULATED-DESIGNED BY: K. SERAN
CHECKED BY: V. LAO
REVISED BY
DATE REVISED

LAST REVISION 00-00-00 | DATE PLOTTED => 01-MAR-2012 | TIME PLOTTED => 07:56

Dist	COUNTY	ROUTE	POST MILES TOTAL PROJECT	SHEET No.	TOTAL SHEETS
03	ED,Pla	89	27.2/27.4, 0.0/T8.5	345	499

Thomas K. Rutsch 2-24-11
REGISTERED CIVIL ENGINEER DATE

8-29-11
PLANS APPROVAL DATE

REGISTERED PROFESSIONAL ENGINEER T.K. RUTSCH No. 47797 Exp. 12-31-11 CIVIL STATE OF CALIFORNIA

THE STATE OF CALIFORNIA OR ITS OFFICERS OR AGENTS SHALL NOT BE RESPONSIBLE FOR THE ACCURACY OR COMPLETENESS OF SCANNED COPIES OF THIS PLAN SHEET.

DRAINAGE PLAN SHEET No.	DRAINAGE SYSTEM No.	DRAINAGE UNIT	CSPA 35" x 24" CSPA (0.109" THICK)	CSPA 60" x 34" CSPA (0.109" THICK)	CSPA 42" x 29" CSPA (0.109" THICK)	CFES 15" CFES	CFES 18" CFES	CFES 24" CFES	(N) MINOR CONCRETE (BACKFILL)	CONCRETE INVERT PAVING	(N) MANHOLE FRAME AND COVER	SAND VAULT FURNISH PRECAST SAND VAULT	SAND VAULT INSTALL PRECAST SAND VAULT	SAND VAULT STRUCTURAL CONCRETE, SAND COLLECTION VAULT	SAND VAULT BAR REINFORCING STEEL (EPOXY COATED)	SAND VAULT STRUCTURE EXCAVATION (SAND VAULT)	SAND VAULT STRUCTURE EXCAVATION (TYPE D)	SAND VAULT STRUCTURE BACKFILL (SAND VAULT)	SAND VAULT FILTER MEDIA	36" PRECAST CONCRETE PIPE INLET	36" CORRUGATED STEEL PIPE INLET (0.109" THICK)	MINOR CONCRETE (MINOR STRUCTURE)	(N) HEIGHT OF INLET	MISCELLANEOUS IRON & STEEL	(N) 12" FLAP GATE	PERMEABLE MATERIAL	RED * RSP (LIGHT, METHOD B)	RED * RSP (1/4 TON, METHOD B)	RED * RSP (BACKING No. 2, METHOD B)	FILTER FABRIC *	STATION	DRAINAGE SYSTEM No.	DRAINAGE UNIT
			LF	LF	LF	EA	EA	EA	LF	CY	EA	EA	EA	CY	LB	CY	CY	CY	CY	LF	LF	CY	LF	LB	EA	CY	CY	CY	CY	SQYD			
D-13	69	h							32.7																							69	h
		i																		13		0.14	6.0,6.0	470		37.3				109.7			i
		j																															j
		k																															k
		l																															l
		m																					4										m
		n																															n
		o							335.5														2.2										o
		p																		4.5		1.10	~~2.5~~	260							"A1"287+02.43		p
		q							135.4																								q
D-13	70	a																													"A1" 287+30.4	70	a
		b						1																									b
		c																															c
		d																		5.2		0.28	4.7	215									d
D-13	71	a																													"A1" 287+89.28	71	a
		b							13.9																								b
		c				1																											c
		d				1																											d
D-13	72	a																													"A1" 289+84.89	72	a
		b																															b
		c					1																										c
		d					1																										d
		e																									4.1			15.0			e
D-13	73	a																				4.09	6.0	606		2.9				8.6	"A1" 290+85.14	73	a
		b																															b
		c																			10.5	0.14	4.5,5.0	430		30.0				88.2			c
SHEET TOTAL						2	2	1	517.5											22.7	10.5	5.75		1981		70.2	4.1			221.5			

* FOR QUANTITY TOTAL, SEE ROCK SLOPE PROTECT TABLE ON SUMMARY OF QUANTITIES.

(N) NOT A SEPARATE PAY ITEM, FOR INFORMATION ONLY.

4 **REVISED PER ADDENDUM No. 4 DATED MARCH 2, 2012**

DRAINAGE QUANTITIES

DQ-60

CALCULATED-DESIGNED BY K. SERAN
CHECKED BY V. LAO
REVISED BY
DATE REVISED
FUNCTIONAL SUPERVISOR K. KEATON

STATE OF CALIFORNIA - DEPARTMENT OF TRANSPORTATION
NORTH REGION
DIVISION OF ENGINEERING
Caltrans

LAST REVISION 00-00-00
DATE PLOTTED => 29-FEB-2012
TIME PLOTTED => 14:35

Dist	COUNTY	ROUTE	POST MILES TOTAL PROJECT	SHEET No.	TOTAL SHEETS
03	ED,Pla	89	27.2/27.4, 0.0/T8.5	354	499

Thomas K. Rutsch 2-24-11
REGISTERED CIVIL ENGINEER DATE

8-29-11
PLANS APPROVAL DATE

REGISTERED PROFESSIONAL ENGINEER T.K. RUTSCH No. 47797 Exp. 12-31-11 CIVIL STATE OF CALIFORNIA

THE STATE OF CALIFORNIA OR ITS OFFICERS OR AGENTS SHALL NOT BE RESPONSIBLE FOR THE ACCURACY OR COMPLETENESS OF SCANNED COPIES OF THIS PLAN SHEET.

DRAINAGE PLAN SHEET No.	DRAINAGE SYSTEM No.	DRAINAGE UNIT	ABANDON CULVERT	SAND BACKFILL	REMOVE CULVERT	REMOVE INLET	REMOVE FES	REMOVE HEADWALL	ADJUST INLET	CAP INLET	MODIFY INLET	UNDER-DRAIN: 12" PERFORATED PLASTIC PIPE	UNDER-DRAIN: 18" PERFORATED PLASTIC PIPE	PRECAST CONCRETE BOX CULVERT	PLASTIC PIPE: 12" PLASTIC PIPE	PLASTIC PIPE: 15" PLASTIC PIPE	PLASTIC PIPE: 18" PLASTIC PIPE	PLASTIC PIPE: 24" PLASTIC PIPE	PLASTIC PIPE: 30" PLASTIC PIPE	PLASTIC PIPE: 36" PLASTIC PIPE	CSP: 24" CSP (0.109" THICK)	CURED-IN-PLACE PIPELINER: 24" CIPP	CURED-IN-PLACE PIPELINER: 30" CIPP	CURED-IN-PLACE PIPELINER: 42" x 29" CIPP	CURED-IN-PLACE PIPELINER: 45" x 24" CIPP	CURED-IN-PLACE PIPELINER: 60" x 34" CIPP	CLEANING, INSPECTING AND PREPARING HOST PIPE	DESCRIPTION	STATION	DRAINAGE SYSTEM No.	DRAINAGE UNIT
			EA	CY	LF	EA	EA	EA	EA	EA	EA	LF	LF	LF	LF	LF	LF	LF	LF	LF	LF	LF	LF	LF	LF	LF	LF				
	85	i			160.0																							REMOVE CULVERT 18" x 160.0' CSP			i
		j															170.9											18" x 170.9' PP w/Conc BACKFILL			j
		k				1																						REMOVE INLET			k
		l																										G3 INLET GRATE TYPE 24-10C			l
		m			32.0																							REMOVE CULVERT (PORTION) 24" x 32.0' CSP			m
		n	1	9.5																								ABANDON CULVERT 24" x 82.0' CSP	4		n
		o														197.8												15" x 197.8' PP w/Conc BACKFILL			o
		p																										G4 (Mod) INLET GRATE TYPE ~~18-10C~~	18-8C		p
		q														76.6												15" x 76.6' PP w/Conc BACKFILL			q
		r																										G4 (Mod) INLET GRATE TYPE ~~18-10C~~	18-8C		r
		s															1.0											18" x 1.0' PP			s
		t																										GCP INLET (H=3.8') GRATE MH COVER			t
		u															2.0											18" x 2.0' PP			u
		v																										GCP INLET (H=2.6') GRATE MH COVER			v
		w															38.0											18" x 38.0' PP w/Conc Bkf			w
		y																										GCP (Mod) INLET GRATE TYPE 36RX			y
		z															1.1											18" x 1.1' PP			z
		aa																										SAND VAULT (IN-LINE)			aa
		bb													0.8													12" x 0.8' PP			bb
		cc											27.2															18" x 27.2' PPP			cc
		dd															1.0											18" x 1.0' PP			dd
		ee																										ST (TYPE GT4-3G) GRATE TYPE 24-10C			ee
		ff															1.0											18" x 1.0' PP			ff
		x																										ST (TYPE GT4-3G) GRATE TYPE 24-10C			x
		gg																										18" CFES			gg
D-15	86	a																										18" CFES	"A1"340+60.00	86	a
D-15	87	a			78.0																							REMOVE CULVERT 18" x 78.0' CSP		87	a
		b															75.0											18" x 75.0' PP			b
		c																										18" CFES			c
D-15	89	a			34.8																							REMOVE CULVERT 18" x 34.8' CSP		89	a
D-15	90	a			29.2																							REMOVE CULVERT 18" x 29.2' CSP		90	a
D-15	91	a			24.3																							REMOVE CULVERT 18" x 24.3' CSP		91	a
D-15	92	a			21.1																							REMOVE CULVERT 18" x 21.1' CSP		92	a
SHEET TOTAL			1	9.5	379.4	1							27.2		0.8	274.4	290.0														

4 **REVISED PER ADDENDUM No. 4 DATED MARCH 2, 2012**

DRAINAGE QUANTITIES

DQ-69

STATE OF CALIFORNIA - DEPARTMENT OF TRANSPORTATION
Caltrans
NORTH REGION
DIVISION OF ENGINEERING

FUNCTIONAL SUPERVISOR: K. KEATON
CALCULATED-DESIGNED BY: K. SERAN
CHECKED BY: V. LAO
REVISED BY
DATE REVISED

LAST REVISION 00-00-00 | DATE PLOTTED => 01-MAR-2012 | TIME PLOTTED => 10:10

Dist	COUNTY	ROUTE	POST MILES TOTAL PROJECT	SHEET No.	TOTAL SHEETS
03	ED,Pla	89	27.2/27.4, 0.0/T8.5	367	499

Thomas K. Rutsch 2-24-11
REGISTERED CIVIL ENGINEER DATE

8-29-11
PLANS APPROVAL DATE

REGISTERED PROFESSIONAL ENGINEER T.K. RUTSCH No. 47797 Exp. 12-31-11 CIVIL STATE OF CALIFORNIA

THE STATE OF CALIFORNIA OR ITS OFFICERS OR AGENTS SHALL NOT BE RESPONSIBLE FOR THE ACCURACY OR COMPLETENESS OF SCANNED COPIES OF THIS PLAN SHEET.

4 **REVISED PER ADDENDUM No. 4 DATED MARCH 2, 2012**

2 4

	CSPA			CFES			(N)		(N)	SAND VAULT										(N)		(N)		RED *					
	35" x 24" CSPA (0.109" THICK)	60" x 34" (0.109" THICK)	42" x 29" (0.109" THICK)	15" CFES	18" CFES	24" CFES	MINOR CONCRETE (BACKFILL)	CONCRETE INVERT PAVING	MANHOLE FRAME AND COVER	FURNISH PRECAST SAND VAULT	INSTALL PRECAST SAND VAULT	STRUCTURAL CONCRETE, SAND COLLECTION VAULT	BAR REINFORCING STEEL (EPOXY COATED)	STRUCTURE EXCAVATION (SAND VAULT)	STRUCTURE EXCAVATION (TYPE D)	STRUCTURE BACKFILL (SAND VAULT)	FILTER MEDIA	36" PRECAST CONCRETE PIPE INLET	36" CORRUGATED STEEL PIPE INLET (0.109" THICK)	MINOR CONCRETE (MINOR STRUCTURE)	HEIGHT OF INLET	MISCELLANEOUS IRON & STEEL	12" FLAP GATE	PERMEABLE MATERIAL	RSP (LIGHT, METHOD B)	RSP (1/4 TON, METHOD B)	RSP (BACKING No.2, METHOD B)	FILTER FABRIC *	
	LF	LF	LF	EA	EA	EA	LF	CY	EA	EA	EA	CY	LB	CY	CY	CY	CY	LF	LF	CY	LF	LB	EA	CY	CY	CY	CY	SQYD	
Sht DQ-2 TOTAL							1003.8											27.8	11.0	15.36		4,269		45.3			0.22	119.6	Sht DQ-2 TOTAL
Sht DQ-4 TOTAL					1		894.1											22.0		10.78		2,880		39.9	3.34		0.22	131.1	Sht DQ-4 TOTAL
Sht DQ-6 TOTAL					1		257.1											7.0	28.2	4.52		2,118		30.2	1.67		0.22	100.5	Sht DQ-6 TOTAL
Sht DQ-8 TOTAL					2		973.2												52.0	21.0		5,356		12.1	10.57		0.22	72.0	Sht DQ-8 TOTAL
Sht DQ-10 TOTAL					1		836.1	16.2										2.9	5.4	20.32		3,955		10.2		135.1		213.4	Sht DQ-10 TOTAL
Sht DQ-12 TOTAL					1	1	502.1			1	1	8.4	4236	79.2		13.2	4.5	13.2	4.9	8.54		2,137	1		11.6			50.8	Sht DQ-12 TOTAL
Sht DQ-14 TOTAL				1	2		456.8			1	1	10.3	5884	91.0		26.5	5.3	15.8		7.24		1,915	1		44.4			77.8	Sht DQ-14 TOTAL
Sht DQ-16 TOTAL					1		193.6			2	2	11.0	5947	102.8		54.7	6.4	14.9		6.76		1,453	3		90.2	6.1		104.2	Sht DQ-16 TOTAL
Sht DQ-18 TOTAL					2		539.3			1	1	7.2	3524	52.6		11.2	3.8	4.0	3.7	8.90		1,440			11.7	16.7		92.3	Sht DQ-18 TOTAL
Sht DQ-20 TOTAL					2		552.7			2	2	20.6	11,768	176.6		50.2	10.6	17.8	6.6	7.50		2,165	2	29.7	21.8			161.2	Sht DQ-20 TOTAL
Sht DQ-22 TOTAL		4.3			1		34.7	8.7		1	1	4.8	2563		56.7	19.1	3.2	5.0	5.5	23.27		834	1	2.1	17.2	75.5		183.4	Sht DQ-22 TOTAL
Sht DQ-24 TOTAL					1		177.1			1	1	8.1	4272		68.3	20.3	5.3	8.5	4.9	8.79		3,391	1	9.5	3.6			69.9	Sht DQ-24 TOTAL
Sht DQ-26 TOTAL							793.7											13.0	13.0	14.03		3,238		44.9			0.22	132.8	Sht DQ-26 TOTAL
Sht DQ-28 TOTAL					1		1075.3												54.0	23.0		5,967		15.6	4.1		0.22	54.5	Sht DQ-28 TOTAL
Sht DQ-30 TOTAL							318.8												25.5	18.29		4,693		92.7				256.7	Sht DQ-30 TOTAL
Sht DQ-32 TOTAL					2		461.5											50.0	39.0	6.58		4,294		117.3	10.0	6.1	0.66	388.4	Sht DQ-32 TOTAL
Sht DQ-34 TOTAL					1		203.2			1	1	5.4	2444		50.8	20.1	3.2	8.3	5.5	5.61		1,049	1	1.7	2.3	13.3		69.8	Sht DQ-34 TOTAL
Sht DQ-36 TOTAL							34.5													2.70		593							Sht DQ-36 TOTAL
Sht DQ-38 TOTAL					1		337.4			1	1	5.4	2444		62.0	20.2	3.2	4.3		11.3		2,235		5.8	6.0	29.4		147.3	Sht DQ-38 TOTAL
Sht DQ-40 TOTAL					1	1	259.1			1	1	4.8	2563		37.3	12.2	3.2	14.3	7.4	11.14		2,951	1	8.0	5.2			53.0	Sht DQ-40 TOTAL
Sht DQ-42 TOTAL					2		849.6											5.3	7.2	15.18		3,838		5.8				12.2	Sht DQ-42 TOTAL
Sht DQ-44 TOTAL							1597.1			1	1	6.3	3329		61.2	19.7	3.9		6.8	21.22		4,190	1	11.5	9.1			75.5	Sht DQ-44 TOTAL
Sht DQ-46 TOTAL	205.5				1		548.7											23.4		17.40		3,400		3.7		5.2	0.22	28.6	Sht DQ-46 TOTAL
Sht DQ-48 TOTAL			14.1		1		672.6			1	1	7.7	4477		80.0	23.5	6.0	14.0		19.20		3,877	1	19.4	4.1			98.9	Sht DQ-48 TOTAL
Sht DQ-50 TOTAL					1		315.8			1	1	8.4	4236		98.1	18.9	4.5	6.3	14.5	11.80		2,516		5.8	6.2	18.3		134.2	Sht DQ-50 TOTAL
Sht DQ-52 TOTAL					1		705.5			1	1	8.7	4988		81.7	23.7	5.3	4.7	11.0	15.00		3,473	1	7.4	5.5			77.1	Sht DQ-52 TOTAL
Sht DQ-54 TOTAL					1		449.3			1	1	9.1	5296		96.0	27.5	6.7	7.7	5.7	17.90		3,735	1	14.5	3.6			106.2	Sht DQ-54 TOTAL
Sht DQ-56 TOTAL					1		937.3			1	1	8.3	4679		70.0	21.1	3.9	13.1	4.4	30.41		4,758	1	19.0	8.4	32.10		163.9	Sht DQ-56 TOTAL
Sht DQ-58 TOTAL					2		850.2			1	1	6.9	5304	48.4		13.4	7.1	11.8	24.4	16.83		4,868	1	9.4	3.6	9.8		99.6	Sht DQ-58 TOTAL
Sht DQ-60 TOTAL				2	2	1	517.5											22.7	10.5	5.75		1,981		70.2	4.1			221.5	Sht DQ-60 TOTAL
Sht DQ-62 TOTAL					2		929.2											16.5	11.0	9.40		2,913		39.8	26.0		0.22	178.5	Sht DQ-62 TOTAL
Sht DQ-64 TOTAL					2		484.6											19.5	4.3	13.90		2,880		16.6	12.1		0.22	71.1	Sht DQ-64 TOTAL
Sht DQ-66 TOTAL					4	1	591.5											13.0	36.4	6.90		2,528		1.8	28.70		0.66	78.2	Sht DQ-66 TOTAL
Sht DQ-68 TOTAL					1		707.7											22.0		27.80		6,001		18.5			0.22	55.5	Sht DQ-68 TOTAL
	205.5	4.3	14.1	3	42	4	20,060.7	24.9		19	19	141.4	77,954	550.6	762.1	395.5	86.1	408.8	402.8	464.32		107,891	17	708.4	355.1	347.6	3.50	3879.7	

* FOR QUANTITY TOTAL, SEE ROCK SLOPE PROTECT TABLE ON SUMMARY OF QUANTITIES.
(N) NOT A SEPARATE PAY ITEM, FOR INFORMATION ONLY.

2 **REVISED PER ADDENDUM No. 2 DATED FEBRUARY 2, 2012**

DRAINAGE QUANTITIES

DQ-82

STATE OF CALIFORNIA - DEPARTMENT OF TRANSPORTATION
Caltrans
NORTH REGION
DIVISION OF ENGINEERING

FUNCTIONAL SUPERVISOR: K. KEATON
CALCULATED-DESIGNED BY: K. SERAN
CHECKED BY: V. LAO
REVISED BY
DATE REVISED

LAST REVISION 00-00-00
DATE PLOTTED => 29-FEB-2012
TIME PLOTTED => 14:47

Dist	COUNTY	ROUTE	POST MILES TOTAL PROJECT	SHEET No.	TOTAL SHEETS
03	ED,Pla	89	27.2/27.4, 0.0/T8.5	369	499

Thomas K. Rutsch 2-24-11
REGISTERED CIVIL ENGINEER DATE

8-29-11
PLANS APPROVAL DATE

REGISTERED PROFESSIONAL ENGINEER T.K. RUTSCH No. 47797 Exp. 12-31-11 CIVIL STATE OF CALIFORNIA

THE STATE OF CALIFORNIA OR ITS OFFICERS OR AGENTS SHALL NOT BE RESPONSIBLE FOR THE ACCURACY OR COMPLETENESS OF SCANNED COPIES OF THIS PLAN SHEET.

2 4

	CSPA			CFES			(N)		(N)	SAND VAULT											(N)		(N)		RED *				
	35" x 24" CSPA (0.109" THICK)	60" x 34" CSPA (0.109" THICK)	42" x 29" CSPA (0.109" THICK)	15" CFES	18" CFES	24" CFES	MINOR CONCRETE (BACKFILL)	CONCRETE INVERT PAVING	MANHOLE FRAME AND COVER	FURNISH PRECAST SAND VAULT	INSTALL PRECAST SAND VAULT	STRUCTURAL CONCRETE, SAND COLLECTION VAULT	BAR REINFORCING STEEL (EPOXY COATED)	STRUCTURE EXCAVATION (SAND VAULT)	STRUCTURE EXCAVATION (TYPE D)	STRUCTURE BACKFILL (SAND VAULT)	FILTER MEDIA	36" PRECAST CONCRETE PIPE INLET	36" CORRUGATED STEEL PIPE INLET(0.109" THICK)	MINOR CONCRETE (MINOR STRUCTURE)	HEIGHT OF INLET	MISCELLANEOUS IRON & STEEL	12" FLAP GATE	PERMEABLE MATERIAL	RSP (LIGHT, METHOD B)	RSP (1/4 TON, METHOD B)	RSP (BACKING No. 2, METHOD B)	FILTER FABRIC *	
	LF	LF	LF	EA	EA	EA	CY	CY	EA	EA	EA	CY	LB	CY	CY	CY	CY	LF	LF	CY	LF	LB	EA	CY	CY	CY	CY	SQYD	
Sht DQ-70 TOTAL					3		510.5			1	1	6.7	3,754	56.0		17.1	5.3	11.7		11.5		2,619	1	8.3	3.80			67.4	Sht DQ-70 TOTAL
Sht DQ-72 TOTAL							1,048.5												6.5	25.5		4,932		14.5				43.0	Sht DQ-72 TOTAL
Sht DQ-74 TOTAL							635.5			1	1	9.7	5,528	104.4		19.8	5.1	4.9		19.9		4,255	1	14.5	1.00			100.6	Sht DQ-74 TOTAL
Sht DQ-76 TOTAL				1	1		1,286.2			1	1	6.7	3,766	77.0		23.9	3.9	4.0	11.6	8.56		2,046			18.70			84.1	Sht DQ-76 TOTAL
Sht DQ-78 TOTAL							1,058.1			1	1	5.9	2,854	73.8		15.8	3.2	20.5		19.7		3,473	1	12.8	0.22			73.8	Sht DQ-78 TOTAL
Sht DQ-80 TOTAL					2		196.0												13.0	25.8		5,324		26.8	3.0		0.22	79.0	Sht DQ-80 TOTAL
SUBTOTAL				1	6		4,734.8			4	4	29.0	15,902	311.2		76.6	17.5	41.1	31.1	110.96		22,649	3	76.9	26.7		0.22	447.9	SUBTOTAL
DQ-82 SUBTOTAL	205.5	4.3	14.1	3	42	4	20,060.7	24.9		19	19	141.4	77,954	550.6	762.1	395.5	86.1	408.8	402.8	464.32		107,891	17	708.4	355.1	347.6	3.50	3879.7	DQ-82 SUBTOTAL
FROM RETAINING WALL													25,036																FROM RETAINING WALL
TOTAL	205.5	4.3	14.1	4	48	4	24,795.5	24.9		23	23	170.4	118,892	861.8	762.1	472.1	103.6	449.9	433.9	575.28		130,540	20	785.3	381.8	347.6	3.7	4327.6	TOTAL

* FOR QUANTITY TOTAL, SEE ROCK SLOPE PROTECT TABLE ON SUMMARY OF QUANTITIES.
(N) NOT A SEPARATE PAY ITEM, FOR INFORMATION ONLY.

2 **REVISED PER ADDENDUM No. 2 DATED FEBRUARY 2, 2012**

4 **REVISED PER ADDENDUM No. 4 DATED MARCH 2, 2012**

DRAINAGE QUANTITIES
DQ-84

REVISED BY | DATE REVISED
K. SERAN | V. LAO
CALCULATED-DESIGNED BY | CHECKED BY
FUNCTIONAL SUPERVISOR
K. KEATON

STATE OF CALIFORNIA - DEPARTMENT OF TRANSPORTATION
Caltrans
NORTH REGION
DIVISION OF ENGINEERING

LAST REVISION 00-00-00 | DATE PLOTTED => 29-FEB-2012 | TIME PLOTTED => 14:57