Dist	COUNTY	ROUTE	POST MILES TOTAL PROJECT	SHEET No.	TOTAL SHEETS
03	Pla,Nev	80	56.1/66.3	2	1082

REGISTERED CIVIL ENGINEER 1-15-09 DATE

4-13-09
PLANS APPROVAL DATE

REGISTERED PROFESSIONAL ENGINEER P. FORTUNE No. 65464 Exp. 9-30-09 CIVIL STATE OF CALIFORNIA

THE STATE OF CALIFORNIA OR ITS OFFICERS OR AGENTS SHALL NOT BE RESPONSIBLE FOR THE ACCURACY OR COMPLETENESS OF SCANNED COPIES OF THIS PLAN SHEET.

GENERAL NOTES:

1. DIMENSIONS OF THE NEW STRUCTURAL SECTIONS ARE SUBJECT TO TOLERANCES IN THE STANDARD SPECS. DIMENSIONS FOR HMA-A BOND BREAKER PAVING IS SUBJECT TO TOLERANCES IN THE SPECIAL PROVISIONS.
2. SEE STAGE CONSTRUCTION PLANS, STAGE 1 AND STAGE 4, FOR SHOULDER RECONSTRUCTION LOCATIONS
3. SEE LAYOUT SHEETS FOR WIDTH AND LOCATION OF CHAIN CONTROL AREA.
4. SUPERELEVATION AS SHOWN OR DIRECTED BY THE ENGINEER.
5. SEE LAYOUT SHEETS FOR TYPE AND LOCATION OF CONCRETE BARRIER, MBGR (7' WOOD POST), CURB, DIKE, FENCE, AND SHOULDER BARRIER.
6. SEE CONSTRUCTION DETAIL SHEET FOR JOINT SEAL DETAIL.
7. DOWELS AND TIE BARS SHALL CONFORM TO THE STANDARD PLAN P1 AND SPECIAL PROVISIONS.
8. SEE STAGE CONSTRUCTION PLANS FOR ISOLATION JOINT LOCATIONS.
9. SEE SUMMARY OF QUANTITIES AND STAGE CONSTRUCTION PLANS FOR REPLACE CONCRETE PAVEMENT QUANTIES AND LOCATIONS.
10. SEE CONSTRUCTION DETAILS FOR PAVEMENT TAPER DETAILS.
11. SEE X-7 FOR EDGE CONDITION TYPICAL CROSS SECTIONS FOR CUT SLOPE CASES NOT SHOWN ON SHEET X-1 THROUGH X-6.
12. LONGITUDINAL JOINT WITH TIE BAR.
13. LONGITUDINAL JOINT WITH SMOOTH DOWEL BAR.
14. APPLY TACK COAT (SS1H) AS INDICATED IN THE STANDARD PLAN AMENDMENTS, SECTION 39.
15. LONGITUDINAL JOINT TIE BAR SHALL BE KINKED TO LIE IN THE NEUTRAL AXIS OF THE JPCP SLAB BETWEEN THE INSIDE SHOULDER AND THE #1 LANE THROUGH NORMAL CROWN SECTIONS.
16. ALL REFERENCES TO JOINTED PLAIN CONCRETE PAVEMENT ARE QUANTIFIED AND PAID FOR AS CONCRETE PAVEMENT.
17. THE SHOULDER AND LANE ADJACENT TO THE SHOULDER MUST BE PLACED MONLITHICALLY TO CREATE A TIED RIGID SHOULDER. (2)

LEGEND

[No.]	STRUCTURAL SECTION
(No.)	SEE NOTE
[No.] Exist	EXISTING STRUCTURAL SECTION

DESIGN DESIGNATION

40 YEAR TI = 14.5
ADT (2032) = 43,000
DESIGN SPEED = 70 mph
ADT (2005) = 29,000

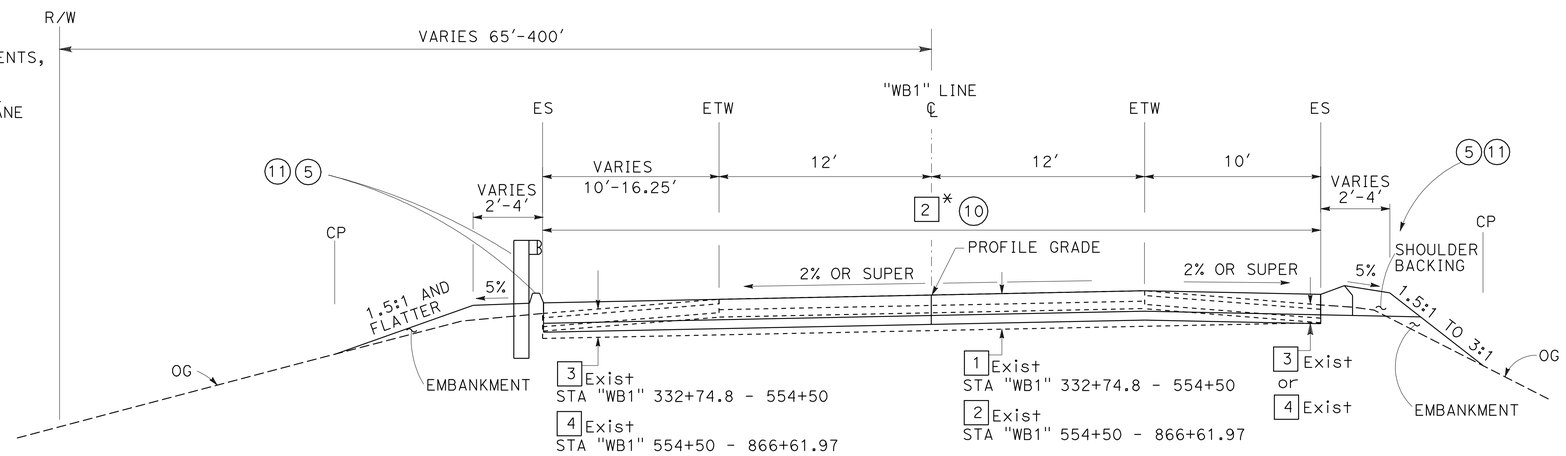

* UNLESS INDICATED BELOW

EXISTING STRUCTURE SECTION

[1] Exist
Exist
0.67 PCC
0.33 CTB
1.00 AS

[2] Exist
Exist
0.67 PCC
0.08 AC
0.67 PCC
0.33 CTB
1.00 AS

[3] Exist
Exist
0.25 AC
0.50 CTB
0.25 AB
0.30-1.00 AS

[4] Exist
Exist
0.30 AC
0.45 AB
0.25 AC
0.50 CTB
0.25 AB
0.30-1.00 AS

[7] Exist
Exist
0.25 AC MINIMUM & VARIES
0.75 AB
1.00 AS

[8] Exist
Exist
1.00 PCC
0.50 LCB
0.35 AS

[9] Exist
Exist
0.5 AC
1.0 AB

[10] Exist
Exist
0.89 PCC
0.50 AC
0.60 AS

[11] Exist
Exist
0.67 AC
0.33 CTB
1.00 AS

[12] Exist
Exist
0.89 PCC
0.50 AC (TYPE A)

[13] Exist
Exist
0.30 AC
1.05 AB
0.70 AS

[14] Exist
Exist
0.17 AC
0.5 AB

WESTBOUND ROUTE 80

"WB1" 332+74.6	TO	335+50.00	
"WB1" 471+00.00	TO	484+00.00	
"WB1" 506+00.00	TO	509+45.73	
"WB1" 515+21.37	TO	542+50.00	
"WB1" 585+00.00	TO	590+72.20	
"WB1" 618+79.70	TO	626+07.21	[10]
"WB1" 629+01.67	TO	633+00.00	
"WB1" 647+50.00	TO	652+42.15	
"WB1" 654+32.76	TO	659+00.00	[12]
"WB1" 676+50.00	TO	684+98.32	[12]
"WB1" 688+30.13	TO	692+50.00	
"WB1" 720+00.00	TO	722+75.00	
"WB1" 722+75.00	TO	727+80.00	[3]
"WB1" 727+80.00	TO	732+00.00	
"WB1" 746+50.00	TO	754+02.84	
"WB1" 757+88.30	TO	761+41.12	[10]
"WB1" 765+27.34	TO	769+35.00	
"WB1" 797+00.00	TO	802+81.55	
"WB1" 805+31.12	TO	811+75.00	
"WB1" 870+15.00	TO	873+23.36	

NEW STRUCTURE SECTION

[1] 1.15 JPCP
0.2 TO 0.8 HMA-A VARIABLE DEPTH

[2] 1.15 JPCP
0.50 HMA-A

[3] 1.15 JPCP
0.50 HMA-A
0.70 AS CLASS 2

[4] 0.20 HMA-A
1.5 AB CLASS 2

[5] 0.2 COLD PLANE ASPHALT CONCRETE PAVEMENT
0.2 HMA-A

[6] 0.33 HMA-A
1.20 CLASS 2 AB

[7] 0.83 JPCP
0.5 HMA-A
VARIABLE AB CLASS 2

[8] VARIES 1.0-0.2 HMA-A
COLD PLANE AC PAVEMENT
0-0.5 VARIABLE DEPTH

[9] VARIES 1.5' TO 0' AB CLASS 2

[10] 1.15 JPCP
0.6 HMA-A

[11] 1.15 CRCP
0.2 TO 0.8 HMA-A VARIABLE DEPTH

[12] 1.15 CRCP
0.50 HMA-A

(2) **REVISED PER ADDENDUM No. 2 DATED SEPTEMBER 10, 2009**

TYPICAL CROSS SECTIONS

NO SCALE

X-1

STATE OF CALIFORNIA - DEPARTMENT OF TRANSPORTATION
NORTH REGION
OFFICE OF DESIGN WEST
DESIGN BRANCH S4
Caltrans

FUNCTIONAL SUPERVISOR: ERIC Y. WONG
CALCULATED-DESIGNED BY: P. FORTUNE
CHECKED BY: J. MA
REVISED BY
DATE REVISED

LAST REVISION 00-00-00
DATE PLOTTED => 09-SEP-2009
TIME PLOTTED => 15:29

Dist	COUNTY	ROUTE	POST MILES TOTAL PROJECT	SHEET No.	TOTAL SHEETS
03	Pla,Nev	80	56.1/66.3	44	1082

REGISTERED CIVIL ENGINEER 1-15-09 DATE

4-13-09
PLANS APPROVAL DATE

REGISTERED PROFESSIONAL ENGINEER P. FORTUNE No. 65464 Exp. 9-30-09 CIVIL STATE OF CALIFORNIA

THE STATE OF CALIFORNIA OR ITS OFFICERS OR AGENTS SHALL NOT BE RESPONSIBLE FOR THE ACCURACY OR COMPLETENESS OF SCANNED COPIES OF THIS PLAN SHEET.

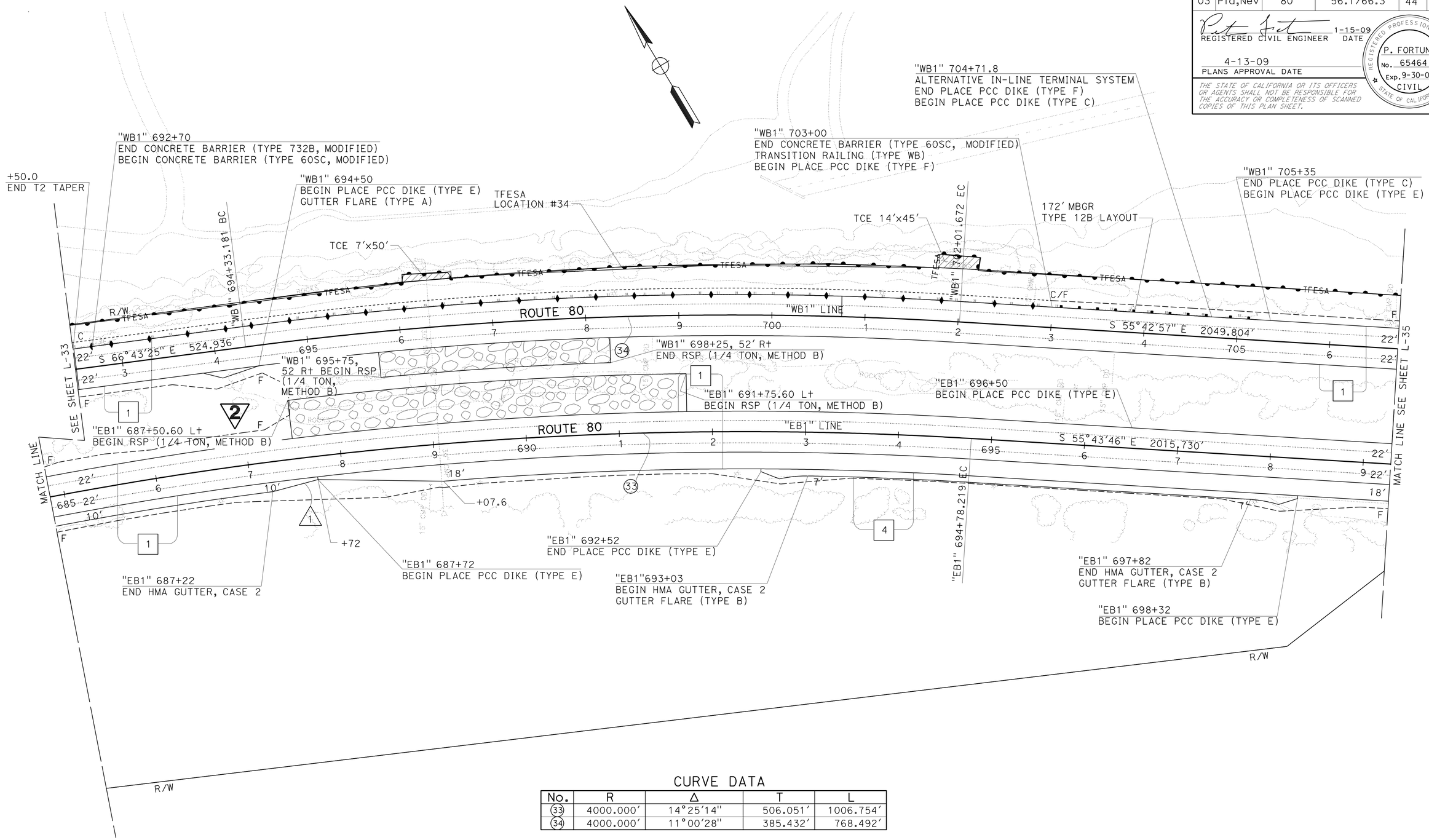

CURVE DATA

No.	R	Δ	T	L
33	4000.000'	14°25'14"	506.051'	1006.754'
34	4000.000'	11°00'28"	385.432'	768.492'

2 REVISED PER ADDENDUM No. 2 DATED SEPTEMBER 10, 2009

LAYOUT
SCALE 1"= 50'

L-34

STATE OF CALIFORNIA - DEPARTMENT OF TRANSPORTATION
Caltrans
NORTH REGION
OFFICE OF DESIGN WEST
DESIGN BRANCH S5

FUNCTIONAL SUPERVISOR: ERIC Y. WONG
CALCULATED-DESIGNED BY: P. FORTUNE
CHECKED BY: L. NGUYEN
REVISED BY
DATE REVISED

LAST REVISION 00-00-00
DATE PLOTTED => 10-SEP-2009
TIME PLOTTED => 07:55

Dist	COUNTY	ROUTE	POST MILES TOTAL PROJECT	SHEET No.	TOTAL SHEETS
03	Pla,Nev	80	56.1/66.3	58	1082

REGISTERED CIVIL ENGINEER 1-15-09 DATE

4-13-09
PLANS APPROVAL DATE

REGISTERED PROFESSIONAL ENGINEER P. FORTUNE No. 65464 Exp. 9-30-09 CIVIL STATE OF CALIFORNIA

THE STATE OF CALIFORNIA OR ITS OFFICERS OR AGENTS SHALL NOT BE RESPONSIBLE FOR THE ACCURACY OR COMPLETENESS OF SCANNED COPIES OF THIS PLAN SHEET.

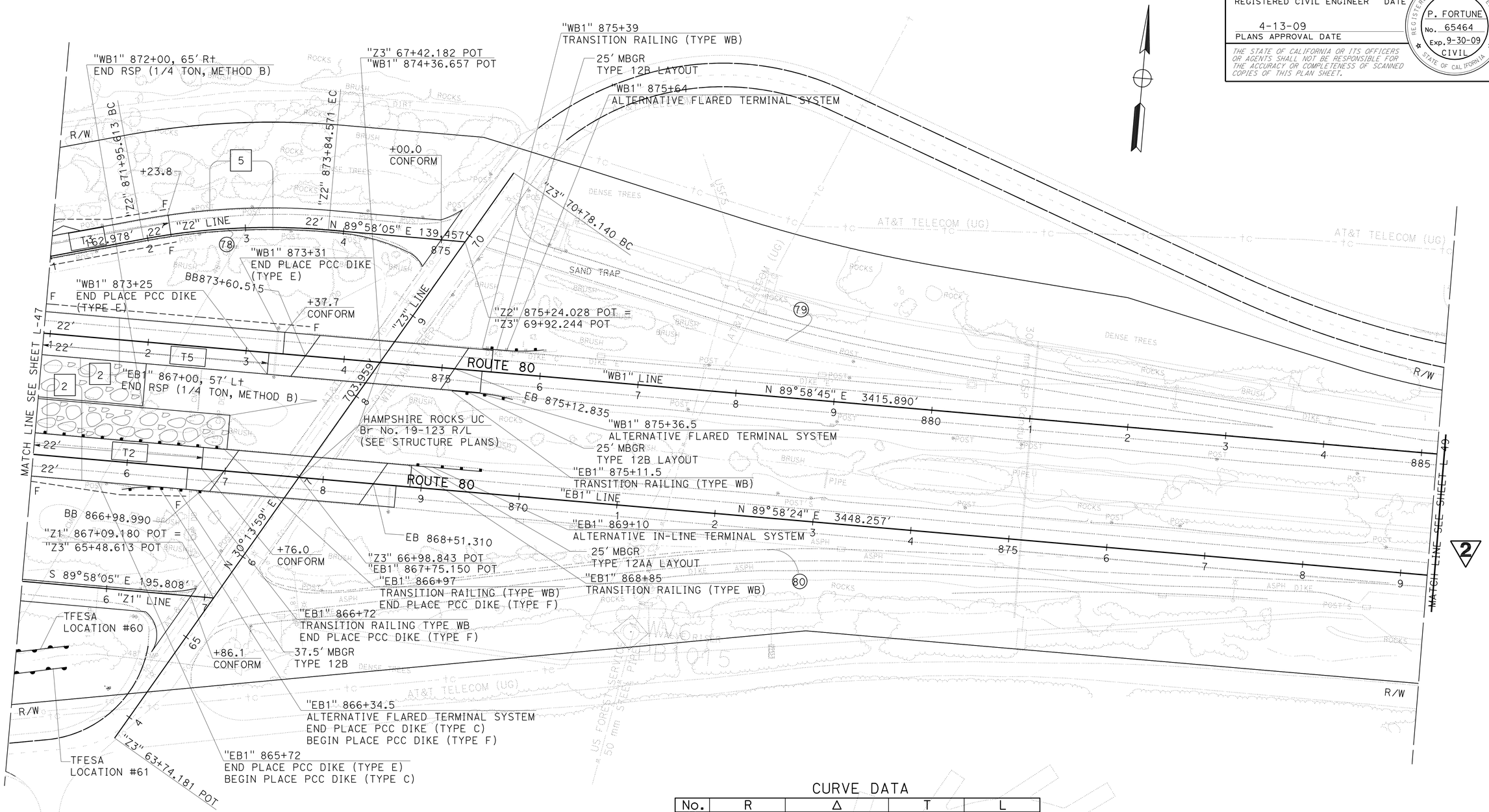

CURVE DATA

No.	R	Δ	T	L
78	700.000'	15°27'59"	95.057'	188.958'
79	1650.000'	8°15'54"	119.214'	238.014'
80	1400.000'	9°01'37"	110.507'	220.557'

2 REVISED PER ADDENDUM No. 2 DATED SEPTEMBER 10, 2009

LAYOUT
SCALE 1"= 50'

L-48

STATE OF CALIFORNIA - DEPARTMENT OF TRANSPORTATION
NORTH REGION
OFFICE OF DESIGN WEST
DESIGN BRANCH S5

FUNCTIONAL SUPERVISOR: ERIC Y. WONG
CALCULATED-DESIGNED BY: P. FORTUNE
CHECKED BY: L. NGUYEN
REVISED BY
DATE REVISED

LAST REVISION 00-00-00
DATE PLOTTED => 09-SEP-2009
TIME PLOTTED => 15:29

Dist	COUNTY	ROUTE	POST MILES TOTAL PROJECT	SHEET No.	TOTAL SHEETS
03	Pla,Nev	80	56.1/66.3	161	1082

REGISTERED CIVIL ENGINEER 1-15-09 DATE

4-13-09
PLANS APPROVAL DATE

REGISTERED PROFESSIONAL ENGINEER P. FORTUNE No. 65464 Exp. 9-30-09 CIVIL STATE OF CALIFORNIA

THE STATE OF CALIFORNIA OR ITS OFFICERS OR AGENTS SHALL NOT BE RESPONSIBLE FOR THE ACCURACY OR COMPLETENESS OF SCANNED COPIES OF THIS PLAN SHEET.

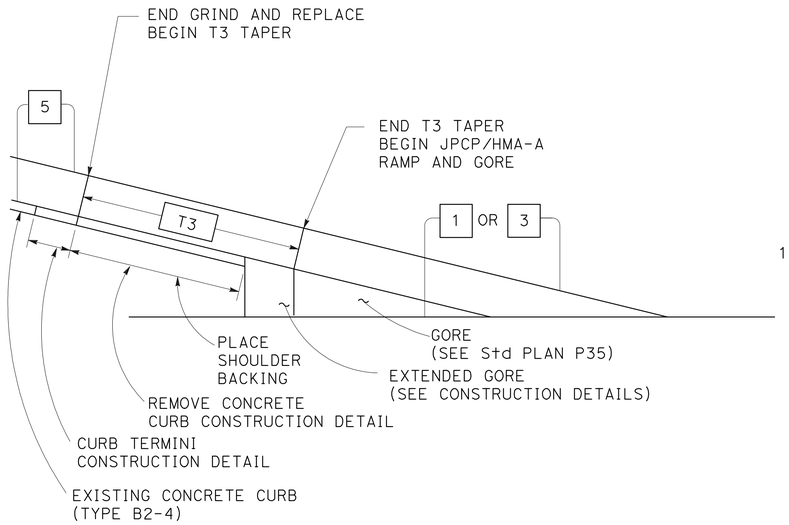

TRANSITION FROM MAINLINE OVERLAY TO RAMP GRIND AND REPLACE

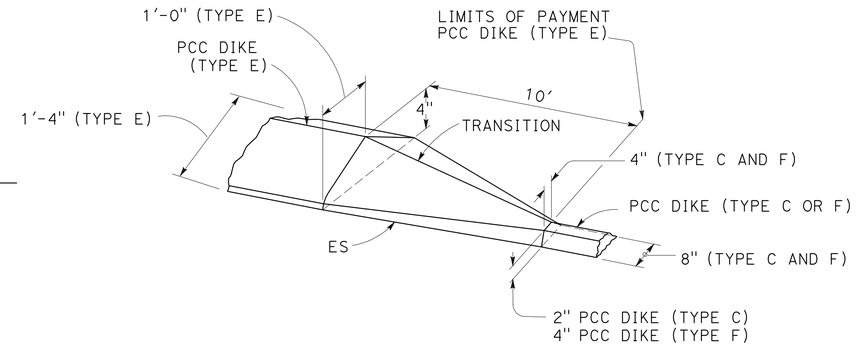

PCC DIKE TRANSITION TYPE E, TYPE C OR TYPE F

(SEE LAYOUT SHEETS FOR LOCATION)

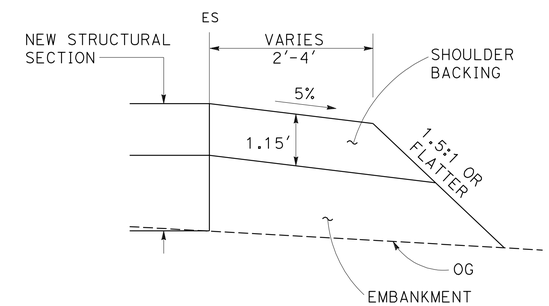

SHOULDER BACKING DETAIL

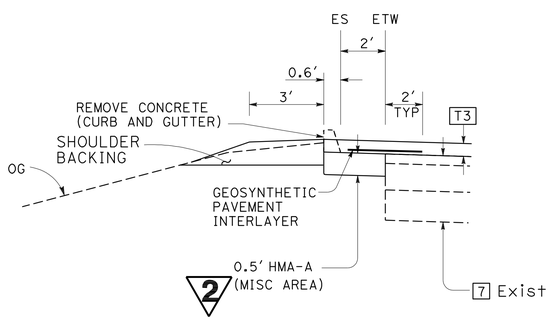

REMOVE CONCRETE CURB CONSTRUCTION DETAIL

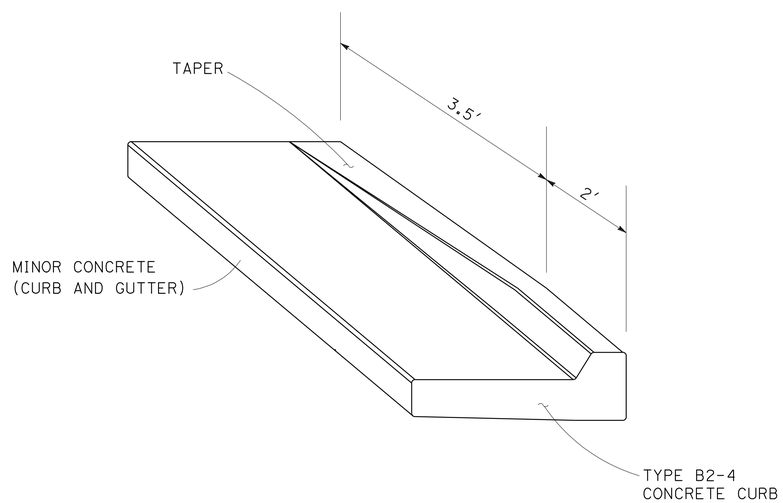

CURB TERMINI CONSTRUCTION DETAIL

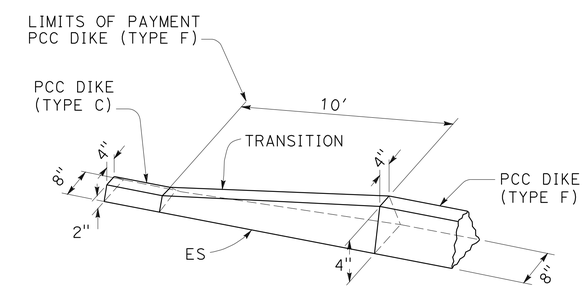

PCC DIKE TRANSITION TYPE C TO TYPE F

(SEE LAYOUT SHEETS FOR LOCATION)

CONSTRUCTION DETAILS

NO SCALE

C-5

2 REVISED PER ADDENDUM No. 2 DATED SEPTEMBER 10, 2009

STATE OF CALIFORNIA - DEPARTMENT OF TRANSPORTATION
NORTH REGION
OFFICE OF DESIGN WEST
DESIGN BRANCH S5

Caltrans

FUNCTIONAL SUPERVISOR: ERIC Y. WONG

CALCULATED-DESIGNED BY: L. NGUYEN
CHECKED BY: P. FORTUNE

REVISED BY
DATE REVISED

LAST REVISION 00-00-00
DATE PLOTTED => 09-SEP-2009
TIME PLOTTED => 15:30

Dist	COUNTY	ROUTE	POST MILES TOTAL PROJECT	SHEET No.	TOTAL SHEETS
03	Pla,Nev	80	56.1/66.3	201	1082

REGISTERED CIVIL ENGINEER 1-15-09 DATE

4-13-09
PLANS APPROVAL DATE

REGISTERED PROFESSIONAL ENGINEER P. FORTUNE No. 65464 Exp. 9-30-09 CIVIL STATE OF CALIFORNIA

THE STATE OF CALIFORNIA OR ITS OFFICERS OR AGENTS SHALL NOT BE RESPONSIBLE FOR THE ACCURACY OR COMPLETENESS OF SCANNED COPIES OF THIS PLAN SHEET.

2 ~~* ROADWAY EXCAVATION CONTAINING ASPHALT CONCRETE SHALL NOT BE RECYCLED AS EMBANKMENT, SHOULDER BACKING, OR AGGREGATE BASE.~~

** A 1.15 GRADING FACTOR IS USED FOR EXISTING STRUCTURAL SECTION THAT IS EXCAVATED AND RECYCLED AS EMBANKMENT, AGGREGATE BASE OR SHOULDER BACKING.

*** A 0.9 GRADING FACTOR IS USED FOR IMPORTED BORROW IN FROM OFF-SITE.

EARTHWORK TABLE BY STAGE
(FOR INFORMATION ONLY)

STAGE/PHASE	STATION	DESCRIPTION 2	NON-RECYCLABLE MATERIAL *		RECYCLABLE MATERIAL AVAILABLE		MATERIAL REQUIRED			** TOTAL RECYCLABLE MATERIAL AVAILABLE	TOTAL MATERIAL REQUIRED	*** IMPORTED BORROW	EXCESS RECYCLABLE MATERIAL
			REMOVE ASPHALT CONCRETE SURFACING	ROADWAY EXCAVATION (AC SHOULDER)	ROADWAY EXCAVATION (PCC LANES)	REPLACE CONCRETE PAVEMENT (FAILED PCC SLABS)	EMBANKMENT AND SHOULDER BACKING (MAINLINE AND RAMPS)	CLASS 2 AB (HMA GUTTER, DITCH, AND SHOULDER)	CLASS 2 AB (MAINTENANCE VEHICLE PULLOUT)				
			CY	CY	CY	CY	CY	CY	CY	CY	CY	CY	CY
STAGE 1/PHASE 1	EB 334+65 TO 698+00	RECONSTRUCT EASTBOUND OUTSIDE SHOULDER	9500							3882	0	0	3882
		REPLACE CONCRETE PAVEMENT (FAILED SLABS)				3376							
	WB 334+24 TO 698+00	RECONSTRUCT WESTBOUND OUTSIDE AND INSIDE SHOLUDER	18600										
STAGE 2/PHASE 1	EB 332+75 TO 648+71	CONSTRUCT INSIDE SHOULDER AND #1 LANE		2329	4994		9661	7000	5268	15510	30143	16259	0
STAGE 2/PHASE 2	EB 332+75 TO 684+71	CONSTRUCT OUTSIDE SHOULDER AND #2 LANE		5524	5117		8214						
STAGE 3/PHASE 1	WB 332+75 TO 685+39	REPLACE CONCRETE PAVEMENT (FAILED SLABS)				2444		7370	2224	19064	22081	3353	0
		CONSTRUCT INSIDE SHOULDER AND #1 LANE		5789	7055		6783						
STAGE 3/PHASE 2	WB 331+32 TO 685+39	CONSTRUCT OUTSIDE SHOULDER AND #2 LANE		3961	7078		5704						
STAGE 4/PHASE 1	EB 698+00 TO 866+59	RECONSTRUCT OUTSIDE SHOULDER	4500							5538	0	0	5538
		REPLACE CONCRETE PAVEMENT (FAILED SLABS)				4816							
	WB 689+08 TO 873+20	RECONSTRUCT OUTSIDE AND INSIDE SHOLUDER	9400										
STAGE 5/PHASE 1	EB 709+50 TO 868+88	CONSTRUCT INSIDE SHOULDER AND #1 LANE		2372	2843		4851	1525	410	12077	10851	0	1226
STAGE 5/PHASE 2	EB 709+50 TO 868+88	CONSTRUCT OUTSIDE SHOULDER AND #2 LANE		2372	2843		4065						
STAGE 6/PHASE 1	WB 716+00 TO 875+41	REPLACE CONCRETE PAVEMENT (FAILED SLABS)				1118		3970	961	9364	12844	3867	0
		CONSTRUCT INSIDE SHOULDER AND #1 LANE		2484	2979		3385						
STAGE 6/PHASE 2	WB 719+00 TO 875+44	CONSTRUCT OUTSIDE SHOULDER AND #2 LANE		2613	2979		4528						
STAGE 7/PHASE 1	WB 685+39 TO 719+00 EB 684+71 TO 712+00	CONSTRUCT #1 LANE AND INSIDE Shld ON WB FROM 685+39 TO 719+00		182	218		912	760		251	4426	4639	0
		CONSTRUCT #1 LANE AND INSIDE Shld ON EB FROM 684+71 TO 712+00					2754						
STAGE 7/PHASE 2	WB 685+39 TO 719+00 EB 684+17 TO 712+00	CONSTRUCT #2 LANE AND OUTSIDE Shld FROM WB 685+39 TO 719+00		182	218		314	760		251	1915	1849	0
		CONSTRUCT #2 LANE AND OUTSIDE Shld FROM EB 684+71 TO 712+00					841						
								TOTAL IMPORTED BORROW			29967		

2 **REVISED PER ADDENDUM No. 2 DATED SEPTEMBER 10, 2009**

CONSTRUCTION DETAILS

C-45

REVISED BY | DATE REVISED

CALCULATED-DESIGNED BY | CHECKED BY

FUNCTIONAL SUPERVISOR: ERIC Y. WONG

STATE OF CALIFORNIA - DEPARTMENT OF TRANSPORTATION
NORTH REGION
OFFICE OF DESIGN WEST
DESIGN BRANCH S5

LAST REVISION 00-00-00 | DATE PLOTTED => 09-SEP-2009 | TIME PLOTTED => 15:30

Dist	COUNTY	ROUTE	POST MILES TOTAL PROJECT	SHEET No.	TOTAL SHEETS
03	Pla,Nev	80	56.1/66.3	204	1082

REGISTERED CIVIL ENGINEER 1-15-09 DATE

4-13-09
PLANS APPROVAL DATE

REGISTERED PROFESSIONAL ENGINEER P. FORTUNE No. 65464 Exp. 9-30-09 CIVIL STATE OF CALIFORNIA

THE STATE OF CALIFORNIA OR ITS OFFICERS OR AGENTS SHALL NOT BE RESPONSIBLE FOR THE ACCURACY OR COMPLETENESS OF SCANNED COPIES OF THIS PLAN SHEET.

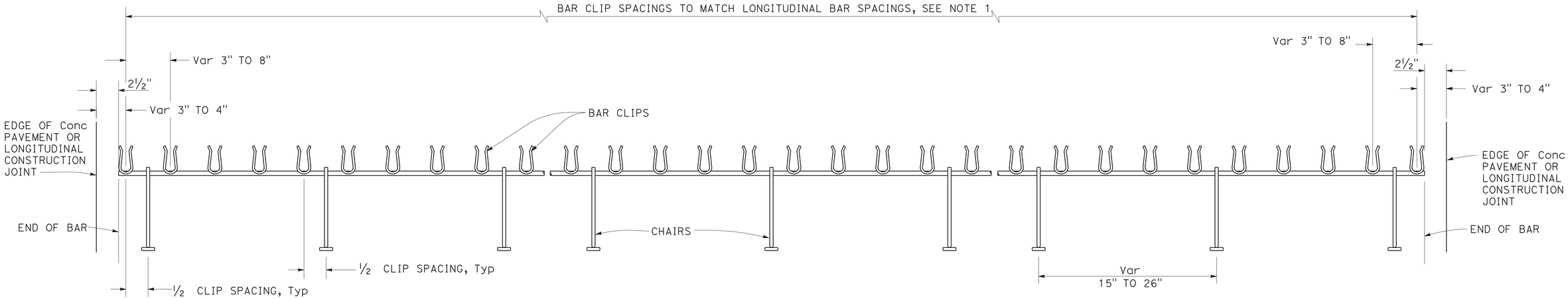

TRANSVERSE BAR ASSEMBLY

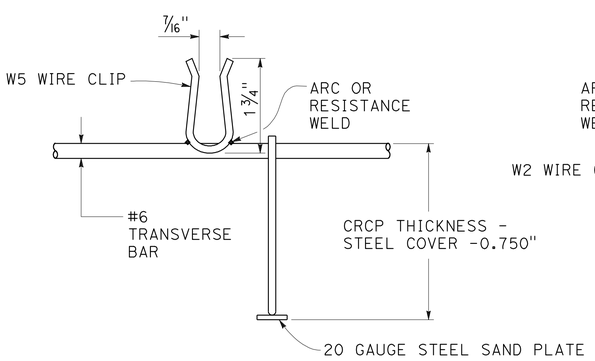

#6 BAR CLIP DETAIL

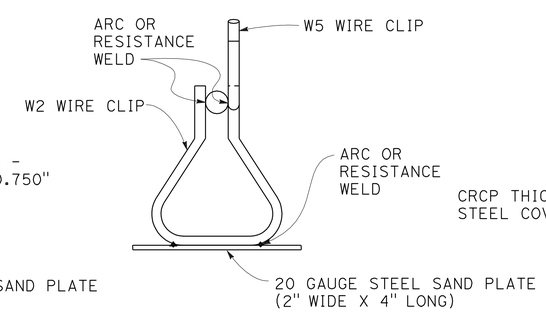

CHAIR DETAIL

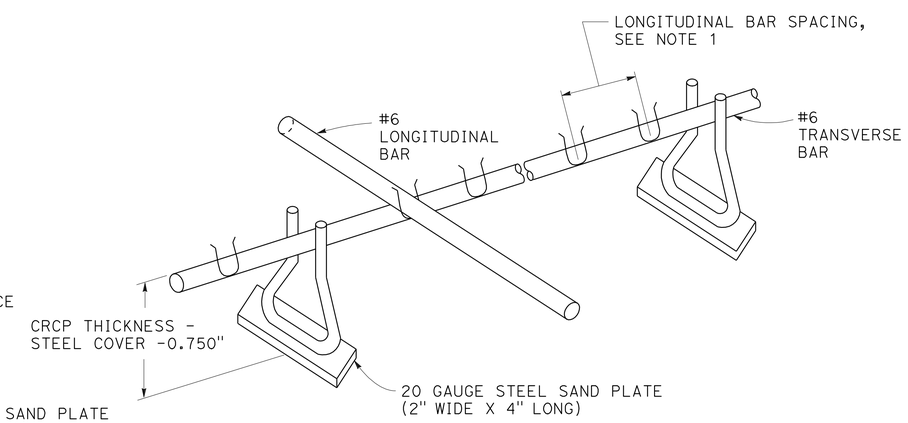

ISOMETRIC VIEW OF CHAIR ASSEMBLY

2

NOTES:

SEE SHEET C-47 FOR SPACING OF LONGITUDINAL BARS.

1. ~~SEE NEW STANDARD PLAN NSP P4 FOR SPACING OF LONGITUDINAL BARS.~~
2. TENSILE STRENGTH OF CHAIR SHALL BE AT LEAST 50,000 PSI.
3. WIRE SIZES SHOWN ARE MINIMUM REQUIRED.

2 **REVISED PER ADDENDUM No. 2 DATED SEPTEMBER 10, 2009**

STATE OF CALIFORNIA
DEPARTMENT OF TRANSPORTATION

CONTINUOUSLY REINFORCED CONCRETE PAVEMENT-SINGLE PIECE TRANSVERSE BAR ASSEMBLY

NO SCALE

C-48

STATE OF CALIFORNIA - DEPARTMENT OF TRANSPORTATION
NORTH REGION
OFFICE OF DESIGN WEST
DESIGN BRANCH S5

Caltrans

FUNCTIONAL SUPERVISOR: ERIC Y. WONG

CALCULATED-DESIGNED BY: L. NGUYEN
CHECKED BY: P. FORTUNE

REVISED BY
DATE REVISED

LAST REVISION 00-00-00
DATE PLOTTED => 09-SEP-2009
TIME PLOTTED => 15:30

Dist	COUNTY	ROUTE	POST MILES TOTAL PROJECT	SHEET No.	TOTAL SHEETS
03	Pla,Nev	80	56.1/66.3	206A	1082

REGISTERED CIVIL ENGINEER 1-15-09 DATE

4-13-09
PLANS APPROVAL DATE

REGISTERED PROFESSIONAL ENGINEER P. FORTUNE No. 65464 Exp. 9-30-09 CIVIL STATE OF CALIFORNIA

THE STATE OF CALIFORNIA OR ITS OFFICERS OR AGENTS SHALL NOT BE RESPONSIBLE FOR THE ACCURACY OR COMPLETENESS OF SCANNED COPIES OF THIS PLAN SHEET.

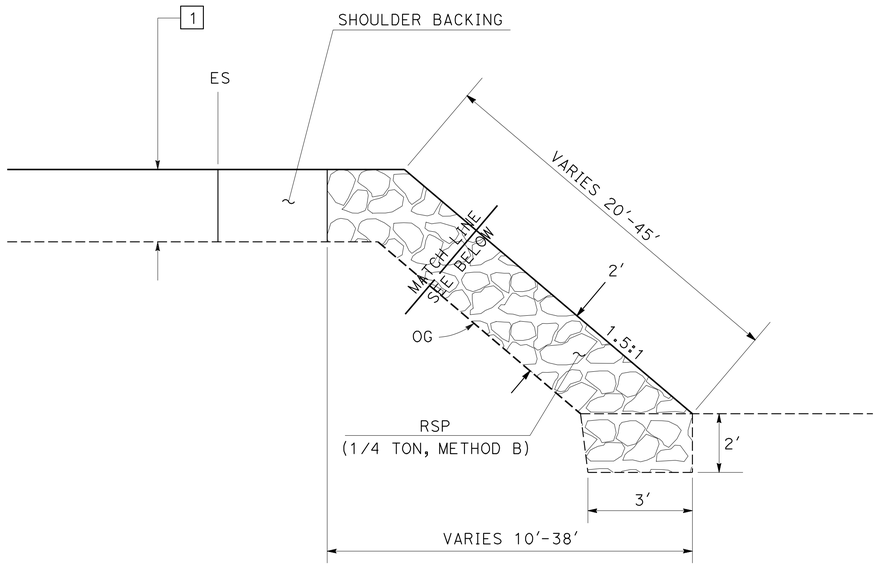

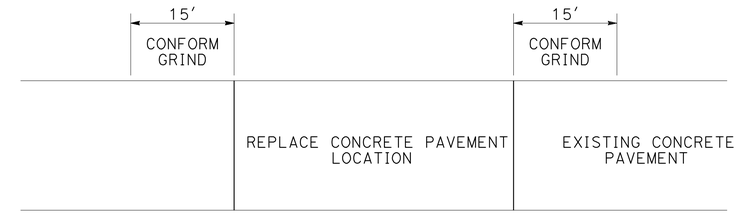

PROFILE VIEW

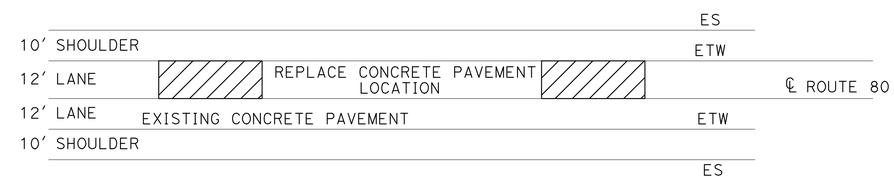

PLAN VIEW

GRIND EXISTING CONCRETE PAVEMENT AT REPLACE CONCRETE PAVEMENT LOCATIONS

LENGEND:

GRIND EXISTING CONCRETE PAVEMENT

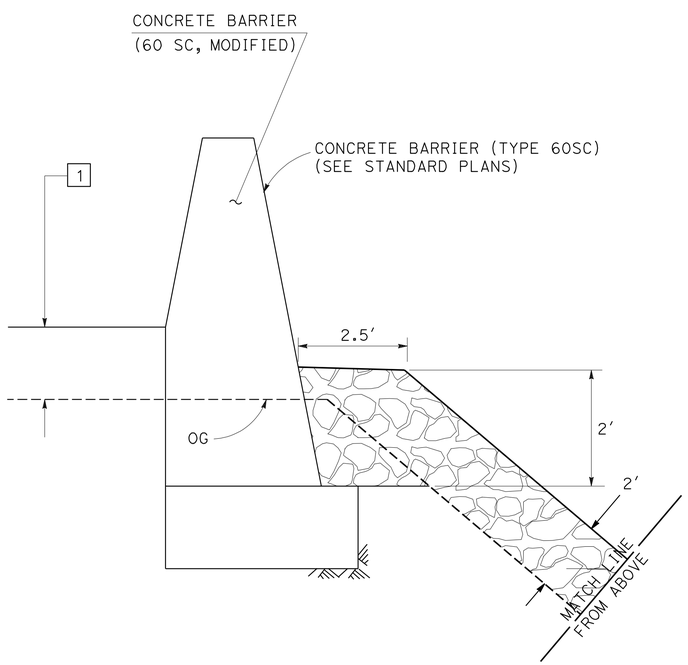

ROCK SLOPE PROTECTION

(1/4 TON, METHOD B)

2 ADDED PER ADDENDUM No. 2 DATED SEPTEMBER 10, 2009

CONSTRUCTION DETAILS

NO SCALE

C-51A

STATE OF CALIFORNIA - DEPARTMENT OF TRANSPORTATION
NORTH REGION
OFFICE OF DESIGN WEST
DESIGN BRANCH S5

Caltrans

FUNCTIONAL SUPERVISOR: ERIC Y. WONG

CALCULATED-DESIGNED BY: L. NGUYEN

CHECKED BY: P. FORTUNE

REVISED BY | DATE REVISED

LAST REVISION 00-00-00 | DATE PLOTTED => 10-SEP-2009 | TIME PLOTTED => 07:09

NOTE: FOR COMPLETE RIGHT OF WAY AND ACCURATE ACCESS DATA, SEE RIGHT OF WAY RECORD MAPS AT DISTRICT OFFICE.

Dist	COUNTY	ROUTE	POST MILES TOTAL PROJECT	SHEET No.	TOTAL SHEETS
03	Pla,Nev	80	56.1/66.3	337	1082

REGISTERED CIVIL ENGINEER 1-15-09 DATE

4-13-09
PLANS APPROVAL DATE

REGISTERED PROFESSIONAL ENGINEER M. MANNION No. 50309 Exp. 6-30-09 CIVIL STATE OF CALIFORNIA

THE STATE OF CALIFORNIA OR ITS OFFICERS OR AGENTS SHALL NOT BE RESPONSIBLE FOR THE ACCURACY OR COMPLETENESS OF SCANNED COPIES OF THIS PLAN SHEET.

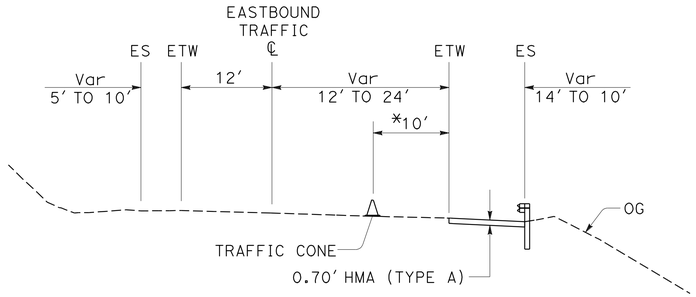

"EB1" 334+64.952 TO 698+00
NO SCALE
*DURING CONSTRUCTION. THE OUTSIDE LANE IS SHOWN CLOSED. SEE Std PLAN T10.

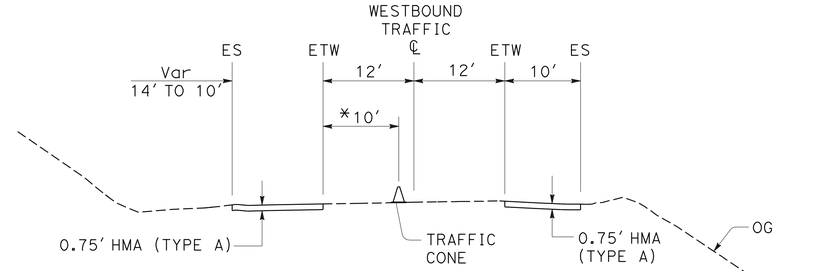

"WB1" 334+24.282 TO 698+00
NO SCALE
*DURING CONSTRUCTION. THE OUTSIDE LANE IS SHOWN CLOSED. SEE Std PLAN T10.

LEGEND:

- S= DELINEATOR SPACING
- CHANGE IN STRIPE PATTERN
- LIMIT OF STRIPE PATTERN
- No. X — PAVEMENT DELINEATION DETAIL NUMBER P=PAINT, T=TAPE OR E=TWO-COMPONENT PAINT
- LL X — LIMIT LINE P=TPMP OR E=TCPPM
- TAPE — TEMPORARY TRAFFIC STRIPE (TAPE)
- PAINT — TEMPORARY TRAFFIC STRIPE (PAINT)
- TPMP — TEMPORARY PAVEMENT MARKING (PAINT)
- TCPPM — TWO-COMPONENT PAINT PAVEMENT MARKING
- RPPM — REMOVE PAINTED PAVEMENT MARKING
- TYPE I (24′) ARROW
- TYPE V ARROW
- TYPE VI ARROW
- A — "AHEAD" PAVEMENT MARKING
- S — "STOP" PAVEMENT MARKING
- No. — ROADSIDE SIGN / STATIONARY MOUNTED CONSTRUCTION AREA SIGN NUMBER
- * — RELOCATE ROADSIDE SIGN
- TRAFFIC PLASTIC DRUM
- TYPE III BARRICADE
- TEMPORARY DELINEATOR OR TEMPORARY OBJECT MARKER
- TEMPORARY CONCRETE BARRIER DELINEATOR (16")
- DIRECTION OF TRAVEL
- No. — REMOVE TRAFFIC STRIPE
- REMOVE ASPHALT CONCRETE SURFACING
- REMOVE CONCRETE CURB AND GUTTER AT GORE AREAS
- TO BE CONSTRUCTED THIS STAGE
- ~~TEMPORARY AC~~
- REPLACE CONCRETE PAVEMENT CATEGORY 1 SEE CONSTRUCTION DETAILS SHEET
- REPLACE CONCRETE PAVEMENT CATEGORY 2 SEE CONSTRUCTION DETAILS SHEET
- REPLACE CONCRETE PAVEMENT CATEGORY 3 SEE CONSTRUCTION DETAILS SHEET
- REPLACE CONCRETE PAVEMENT CATEGORY 4 SEE CONSTRUCTION DETAILS SHEET

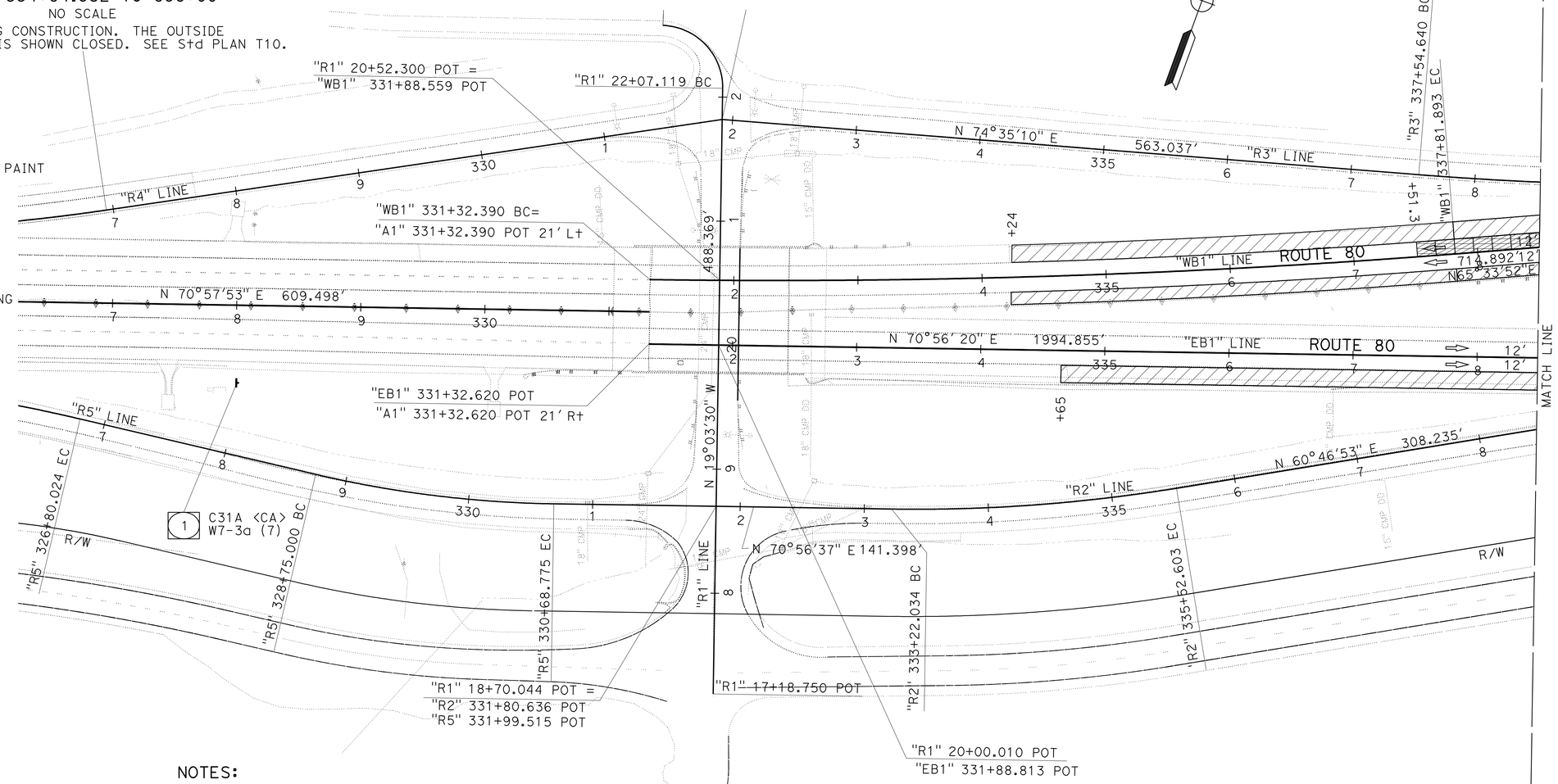

NOTES:

1. ALL TRAFFIC PLASTIC DRUMS SHALL BE INSTALLED ON 50′ CENTERS UNLESS OTHERWISE SHOWN.
2. SEE STAGE CONSTRUCTION LAYOUTS FOR EXACT LOCATIONS OF REMOVE CONCRETE CURB AND GUTTER AND SHOULDER RECONSTRUCTION.
3. REMOVE AC DIKE PRIOR TO THE PLACEMENT OF THE HMA BOND BREAKER.
4. DETAIL NUMBERS 36, 36A, AND 37 SHALL BE PLACED WITHOUT THE RETROREFLECTIVE PAVEMENT MARKERS.
5. SEE ROADWAY PLANS FOR REPLACE CONCRETE PAVEMENT QUANTITIES.

THIS PLAN ACCURATE FOR STAGE CONSTRUCTION AND TRAFFIC HANDLING WORK ONLY.

2 REVISED PER ADDENDUM No. 2 DATED SEPTEMBER 10, 2009

STAGE 1 PHASE 1

STAGE CONSTRUCTION AND TRAFFIC HANDLING PLAN

SCALE: 1"=50′

SC-1

REVISED BY | DATE REVISED
M. MANNION | M. MANNION
CALCULATED-DESIGNED BY | CHECKED BY
FUNCTIONAL SUPERVISOR: ERIC Y. WONG

STATE OF CALIFORNIA - DEPARTMENT OF TRANSPORTATION
NORTH REGION
OFFICE OF DESIGN, WEST
DESIGN BRANCH S5
Caltrans

LAST REVISION 00-00-00 | DATE PLOTTED => 09-SEP-2009 | TIME PLOTTED => 15:30

Dist	COUNTY	ROUTE	POST MILES TOTAL PROJECT	SHEET No.	TOTAL SHEETS
03	Pla,Nev	80	56.1/66.3	777	1082

REGISTERED CIVIL ENGINEER 1-15-09 DATE

4-13-09
PLANS APPROVAL DATE

REGISTERED PROFESSIONAL ENGINEER M. MANNION No. 50309 Exp. 6-30-09 CIVIL STATE OF CALIFORNIA

THE STATE OF CALIFORNIA OR ITS OFFICERS OR AGENTS SHALL NOT BE RESPONSIBLE FOR THE ACCURACY OR COMPLETENESS OF SCANNED COPIES OF THIS PLAN SHEET.

LEGEND:

TEMPORARY HMA RAMP

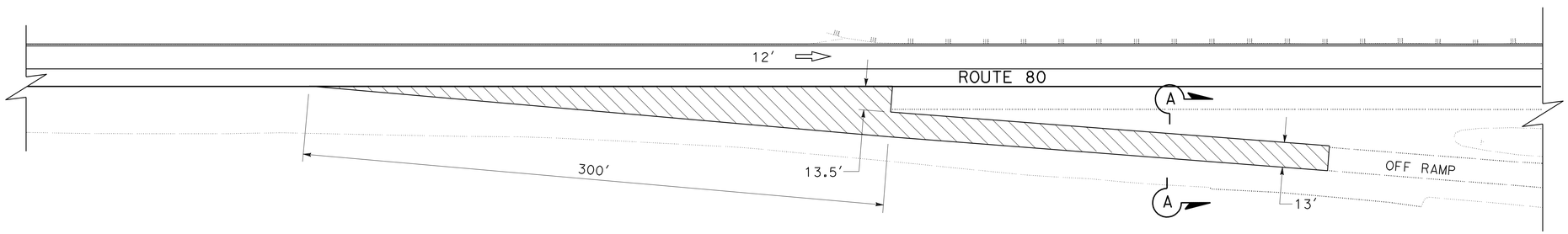

PLAN

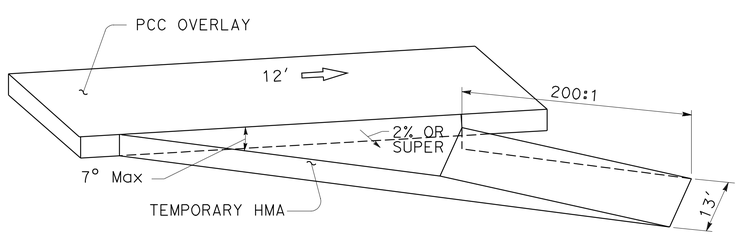

ELEVATION

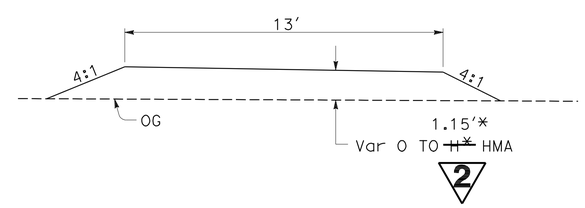

SECTION A-A

2 ~~*SEE TABLE FOR DEPTH~~
*HEIGHT = 1.58′ AT EB OFFRAMP TO ROUTE 20

DETAIL C1
TEMPORARY HMA RAMP FOR OFF RAMP

2 REVISED PER ADDENDUM No. 2 DATED SEPTEMBER 10, 2009

STAGE CONSTRUCTION DETAILS
NO SCALE

SCD-23

STATE OF CALIFORNIA - DEPARTMENT OF TRANSPORTATION
Caltrans
NORTH REGION
OFFICE OF DESIGN, WEST
DESIGN BRANCH S5

FUNCTIONAL SUPERVISOR: ERIC Y. WONG

CALCULATED-DESIGNED BY: M. MANNION
CHECKED BY: M. MANNION

REVISED BY
DATE REVISED

LAST REVISION 00-00-00
DATE PLOTTED => 10-SEP-2009
TIME PLOTTED => 07:55

Dist	COUNTY	ROUTE	POST MILES TOTAL PROJECT	SHEET No.	TOTAL SHEETS
03	Pla,Nev	80	56.1/66.3	778	1082

REGISTERED CIVIL ENGINEER 1-15-09 DATE

4-13-09
PLANS APPROVAL DATE

REGISTERED PROFESSIONAL ENGINEER M. MANNION No. 50309 Exp. 6-30-09 CIVIL STATE OF CALIFORNIA

THE STATE OF CALIFORNIA OR ITS OFFICERS OR AGENTS SHALL NOT BE RESPONSIBLE FOR THE ACCURACY OR COMPLETENESS OF SCANNED COPIES OF THIS PLAN SHEET.

LEGEND:

2 TEMPORARY HMA RAMP

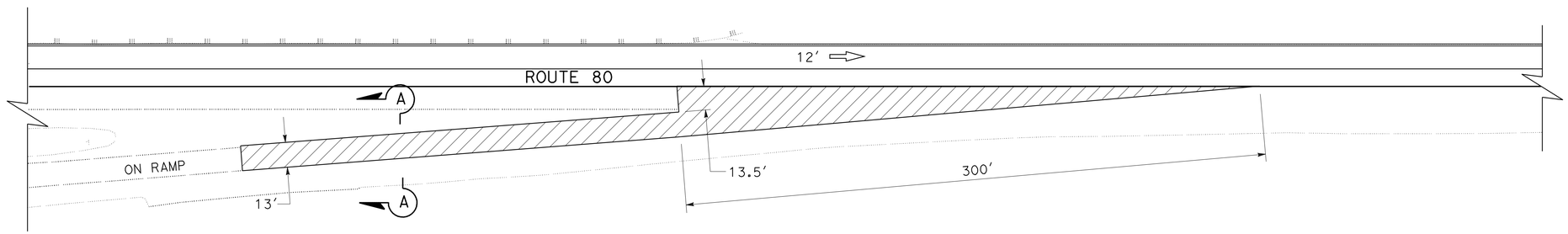

PLAN

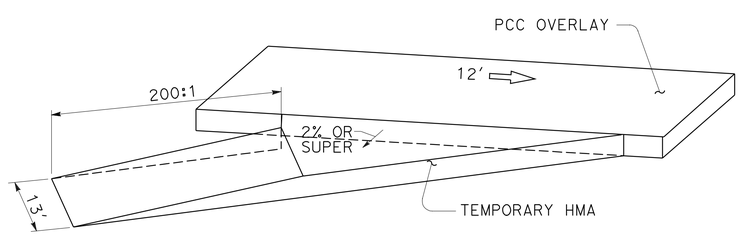

ELEVATION

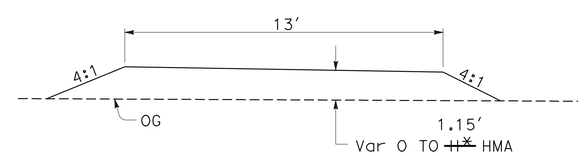

2

SECTION A-A

2 ~~*SEE TABLE FOR DEPTH~~

DETAIL C2
TEMPORARY HMA RAMP FOR ON RAMP

2 **REVISED PER ADDENDUM No. 2 DATED SEPTEMBER 10, 2009**

STAGE CONSTRUCTION DETAILS
NO SCALE
SCD-24

STATE OF CALIFORNIA - DEPARTMENT OF TRANSPORTATION
Caltrans
NORTH REGION
OFFICE OF DESIGN, WEST
DESIGN BRANCH S5

FUNCTIONAL SUPERVISOR: ERIC Y. WONG

CALCULATED-DESIGNED BY: M. MANNION
CHECKED BY: M. MANNION

REVISED BY
DATE REVISED

LAST REVISION 00-00-00
DATE PLOTTED => 09-SEP-2009
TIME PLOTTED => 15:31

Dist	COUNTY	ROUTE	POST MILES TOTAL PROJECT	SHEET No.	TOTAL SHEETS
03	Pla,Nev	80	56.1/66.3	782	1082

REGISTERED CIVIL ENGINEER 1-15-09 DATE

4-13-09
PLANS APPROVAL DATE

REGISTERED PROFESSIONAL ENGINEER M. MANNION No. 50309 Exp. 6-30-09 CIVIL STATE OF CALIFORNIA

THE STATE OF CALIFORNIA OR ITS OFFICERS OR AGENTS SHALL NOT BE RESPONSIBLE FOR THE ACCURACY OR COMPLETENESS OF SCANNED COPIES OF THIS PLAN SHEET.

TEMPORARY CRASH CUSHION MODULE

LOCATION	SIDE	STATION	STAGE	ARRAY 'TS14'	ARRAY 'TU14'
				EA	EA
MEDIAN ROUTE 80		"A1" 319+95.673	2		14
EB ROUTE 80	RIGHT	"EB1" 369+48.462	2	14	
EB ON RAMP FROM ROUTE 20	RIGHT	"T4" 540+46.626	2	14	
EB ROUTE 80	RIGHT	"EB1" 582+35.550	2	14	
EB ROUTE 80	RIGHT	"EB1" 659+39.899	2	14	
EB ROUTE 80	RIGHT	"EB1" 671+61.697	2	14	
WB ROUTE 80	LEFT	"WB1" 459+62.840	3	14	
WB ROUTE 80	LEFT	"WB1" 571+53.875	3	14	
WB ROUTE 80	LEFT	"WB1" 645+28.585	3	14	
WB ROUTE 80	LEFT	"WB1" 671+43.980	3	14	
WB ROUTE 80	RIGHT	"WB1" 710+05.995	3	14	
WB ROUTE 80	LEFT	"WB1" 741+02.238	3	14	
EB ROUTE 80	RIGHT	"EB1" 660+77.643	5	14	
EB ROUTE 80	LEFT	"EB1" 688+02.635	5	14	
EB ROUTE 80	RIGHT	"EB1" 739+77.729	5	14	
EB ROUTE 80	RIGHT	"EB1" 751+42.066	5	14	
EB ROUTE 80	RIGHT	"EB1" 786+75.312	5	14	
EB ROUTE 80	RIGHT	"EB1" 824+07.619	5	14	
EB ROUTE 80	RIGHT	"EB1" 852+14.212	5	14	
WB ROUTE 80	LEFT	"WB1" 773+12.646	6	14	
WB ROUTE 80	LEFT	"WB1" 842+98.887	6	14	
WB ROUTE 80	RIGHT	"WB1" 934+25.635	6	14	
WB ROUTE 80	LEFT	"WB1" 962+03.816	6	14	
WB ROUTE 80	LEFT	"WB1" 705+25.395	7	14	
			SUBTOTAL	322	14
			TOTAL	336	

TEMPORARY HMA RAMP QUANTITIES

RAMP LOCATION	STAGE	PHASE	HMA (TYPE A)	TEMPORARY TRAFFIC STRIPE (PAINT)	2 REMOVE TEMPORARY HMA RAMP
			TON	LF	CY
EB ON RAMP FROM EMIGRANT GAP	2	2	553.8	922.7	273.5
EB OFF RAMP TO LAING ROAD	2	2	551.6	992.6	272.4
EB OFF RAMP TO ROUTE 20	2	2	839.9	1161.2	414.8
EB ON RAMP FROM ROUTE 20	2	2	548.3	919.9	270.8
EB ON RAMP FROM EAGLE LAKES	2	2	553.6	924.2	273.4
EB OFF RAMP TO EAGLE LAKES	2	2	554.0	993.0	273.6
WB OFF RAMP TO EMIGRANT GAP	3	2	548.9	985.2	271.1
WB ON RAMP FROM YUBA GAP	3	2	553.1	921.8	273.1
WB OFF RAMP TO YUBA GAP	3	2	550.3	993.0	271.8
WB OFF RAMP TO ROUTE 20	3	2	499.6	836.2	246.7
WB ON RAMP FROM EAGLE LAKES	3	2	527.0	752.3	260.2
WB OFF RAMP TO EAGLE LAKES	3	2	530.5	897.5	262.0
EB ON RAMP FROM CISCO GROVE	5	2	553.7	923.4	273.4
EB OFF RAMP TO RAINBOW ROAD	5	2	505.1	877.8	249.4
WB OFF RAMP TO CISCO GROVE	6	2	554.0	993.0	273.6
WB ON RAMP FROM RAINBOW ROAD	6	2	553.6	923.5	273.4
		TOTAL	8977.0 *	15,017.3**	4433.2

2 * QUANTITIES INCLUDED IN ROADWAY QUANTITIES SHEET.
** QUANTITIES INCLUDED IN MISCELLANEOUS STAGE CONSTRUCTION QUANTITIES TABLE.

TEMPORARY DI COVERS

DRAINAGE SYSTEM No.	DRAINAGE UNIT	STAGE & PHASE INSTALL	STAGE & PHASE REMOVE	STEEL DI COVER (1/8" x 3'-11" x 3'-3")
				EA
43	d	STAGE 2 PHASE 2	STAGE 2 WINTER	1
51	c	STAGE 2 PHASE 2	STAGE 2 WINTER	1
56	d	STAGE 2 PHASE 2	STAGE 2 WINTER	1
67	d	STAGE 2 PHASE 2	STAGE 2 WINTER	1
10	a	STAGE 3 PHASE 1	STAGE 3 WINTER	1
25	a	STAGE 3 PHASE 1	STAGE 3 WINTER	1
27	c	STAGE 3 PHASE 1	STAGE 3 WINTER	1
52	a	STAGE 3 PHASE 1	STAGE 3 WINTER	1
76	a	STAGE 3 PHASE 1	STAGE 3 WINTER	1
43	d	STAGE 3 PHASE 1	STAGE 3 WINTER	1
51	c	STAGE 3 PHASE 1	STAGE 3 WINTER	1
56	d	STAGE 3 PHASE 1	STAGE 3 WINTER	1
67	d	STAGE 3 PHASE 1	STAGE 3 WINTER	1
30	a	STAGE 3 PHASE 2	STAGE 3 WINTER	1
32	a	STAGE 3 PHASE 2	STAGE 3 WINTER	1
109	c	STAGE 5 PHASE 2	STAGE 5 & 6 WINTER	1
113	d	STAGE 5 PHASE 2	STAGE 5 & 6 WINTER	1
114	d	STAGE 5 PHASE 2	STAGE 5 & 6 WINTER	1
126	a	STAGE 6 PHASE 1	STAGE 5 & 6 WINTER	1
130	a	STAGE 6 PHASE 1	STAGE 5 & 6 WINTER	1
138	a	STAGE 6 PHASE 1	STAGE 5 & 6 WINTER	1
140	a	STAGE 6 PHASE 1	STAGE 5 & 6 WINTER	1
127	a	STAGE 6 PHASE 2	STAGE 5 & 6 WINTER	1
139	a	STAGE 6 PHASE 2	STAGE 5 & 6 WINTER	1
141	a	STAGE 6 PHASE 2	STAGE 5 & 6 WINTER	1
			TOTAL	25

STAGE CONSTRUCTION TAPERS

STAGE	PHASE	HMA (TYPE A)	GRIND EXISTING CONCRETE PAVEMENT	COLD PLANE ASPHALT CONCRETE
		TON	SQYD	SQYD
2	1	511	502	758
	2	237	67	56
3	1	357	670	901
5	1	443	469	526
	2	248	67	56
6	1	489	469	539
	2	509	67	144
7	1	46	67	1725
	2			2027
TOTAL		2840*	2378*	6732*

* QUANTITIES INCLUDED IN ROADWAY QUANTITIES SHEET. 2

TRAFFIC CONTROL DEVICES

STAGE	PHASE	PLASTIC DRUM FURNISH	PLASTIC DRUM (N) INSTALL	TYPE III BARRICADE FURNISH	TYPE III BARRICADE INSTALL
		EA		EA	
2	1	847	847	4	4
	2		814		4
3	1		835		4
	2		800	4	8
5	1		554		4
	2		519		4
6	1		494		4
	2		492		4
7	1		184		8
	2		181	5	13
TOTAL		847	5720	13	

(N) - NOT A SEPARATE PAY ITEM, FOR INFORMATION ONLY.

CONCRETE BARRIER

LOCATION	STATION LIMITS	TIME	PORTABLE CONCRETE BARRIER (TYPE 60K, PINNED) RESET	PORTABLE CONCRETE BARRIER (TYPE 60K, PINNED) SALVAGE	TYPE 60S
			LF	LF	LF
ROUTE 80 MEDIAN	"A1" 312+75.673 TO "A1" 319+95.673	STAGE 2 PHASE 1	720*		
ROUTE 80 MEDIAN	"A1" 312+75.673 TO "A1" 319+95.673	STAGE 2 WINTER	720 (N)		
ROUTE 80 MEDIAN	"A1" 312+75.673 TO "A1" 319+95.673	STAGE 3 PHASE 1		720	
ROUTE 80 MEDIAN	"A1" 312+75.673 TO "A1" 319+95.673	STAGE 3 WINTER			720
		TOTAL	720	720**	720**

(N) - NOT A SEPARATE PAY ITEM, FOR INFORMATION ONLY.
* REMOVE IN STAGE 2 PHASE 1 AND PLACE IN STAGE 2 WINTER.
** QUANTITIES INCLUDED IN ROADWAY QUANTITIES SHEET.

2 **REVISED PER ADDENDUM No. 2 DATED SEPTEMBER 10, 2009**

STAGE CONSTRUCTION QUANTITIES
SCQ-1

STATE OF CALIFORNIA - DEPARTMENT OF TRANSPORTATION
NORTH REGION
OFFICE OF DESIGN, WEST
DESIGN BRANCH S5

FUNCTIONAL SUPERVISOR: ERIC Y. WONG
CALCULATED-DESIGNED BY: M. MANNION
CHECKED BY: M. MANNION
REVISED BY
DATE REVISED

LAST REVISION 00-00-00 | DATE PLOTTED => 10-SEP-2009 | TIME PLOTTED => 07:56

Dist	COUNTY	ROUTE	POST MILES TOTAL PROJECT	SHEET No.	TOTAL SHEETS
03	Pla,Nev	80	56.1/66.3	914	1082

REGISTERED CIVIL ENGINEER 1-15-09 DATE

4-13-09
PLANS APPROVAL DATE

REGISTERED PROFESSIONAL ENGINEER P. FORTUNE No. 65464 Exp. 9-30-09 CIVIL STATE OF CALIFORNIA

THE STATE OF CALIFORNIA OR ITS OFFICERS OR AGENTS SHALL NOT BE RESPONSIBLE FOR THE ACCURACY OR COMPLETENESS OF SCANNED COPIES OF THIS PLAN SHEET.

HMA GUTTER TRANSITIONS

STATION	DIRECTION	SIDE	TYPE	PLACE HOT MIX ASPHALT (MISCELLANEOUS AREA)	HOT MIX ASPHALT (TYPE A)	CLASS 2 AGGREGATE BASE	PLACE HMA DIKE (TYPE E)	PLACE HMA DIKE (TYPE E)	REMOVE BASE AND SURFACING	REMOVE ASPHALT CONCRETE DIKE
				SQYD	TON	CY	LF	TON	CY	LF
341+65 (R3)	WB	L+	2	25.0	3.4	12.5			3	
368+50	EB	L+	1	19.4	2.6	9.7	50.5	1.3	3	50.5
394+27	EB	L+	2	20.0	2.7	10.0			3	
399+85	EB	L+	1	25.0	3.4	12.5	50.5	1.3	3	50.5
438+05	WB	L+	2	16.7	2.2	8.3			3	
477+40	WB	L+	1	11.1	1.5	5.6	50.5	1.3	3	50.5
478+75	WB	L+	1	11.1	1.5	5.6	50.5	1.3	3	50.5
489+34 (S4)	EB	R+	1	27.8	3.7	13.9	50.5	1.3	3	50.5
488+88	WB	R+	1	27.8	3.7	13.9	50.5	1.3	3	50.5
502+10	EB	R+	1	16.7	2.2	8.3	50.5	1.3	3	50.5
525+00	WB	R+	1	19.4	2.6	9.7	50.5	1.3	3	50.5
541+30	WB	L+	1	19.4	2.6	9.7	50.5	1.3	3	50.5
558+00	WB	R+	1	19.4	2.6	9.7	50.5	1.3	3	50.5
559+50	EB	R+	1	16.7	2.2	8.3	50.5	1.3	3	50.5
564+80	WB	R+	2	16.7	2.2	8.3			3	
566+00	EB	R+	1	16.7	2.2	8.3	50.5	1.3	3	50.5
572+00	EB	R+	2	15.0	2.0	7.5			3	
573+15	WB	R+	1	19.4	2.6	9.7	50.5	1.3	3	50.5
578+48	EB	R+	2	16.7	2.2	8.3			3	
595+00	WB	R+	1	11.1	1.5	5.6	50.5	1.3	3	50.5
597+38	EB	R+	2	16.7	2.2	8.3			3	
601+00	EB	R+	1	19.4	2.6	9.7	50.5	1.3	3	50.5
603+00	WB	R+	1	16.7	2.2	8.3	50.5	1.3	3	50.5
612+00	WB	R+	1	16.7	2.2	8.3	50.5	1.3	3	50.5
612+53	EB	R+	2	16.7	2.2	8.3			3	
616+01.5	EB	R+	2	16.7	2.2	8.3			3	
620+50.5	EB	R+	2	16.7	2.2	8.3			3	
628+20	EB	R+	1	19.4	2.6	9.7	50.5	1.3	3	50.5
642+50	WB	R+	1	19.4	2.6	9.7	50.5	1.3	3	50.5
640+65 (U1)	EB	R+	1	13.9	1.9	6.9	50.5	1.3	3	50.5
671+60	EB	R+	1	16.7	2.2	8.3	50.5	1.3	3	50.5
678+62	WB	L+	1	25.0	3.4	12.5	50.5	1.3	3	50.5
684+91	WB	L+	1	19.4	2.6	9.7	50.5	1.3	3	50.5
687+40	EB	R+	1	27.8	3.7	13.9	50.5	1.3	3	50.5
728+20	EB	R+	2	16.7	2.2	8.3			3	
732+69	EB	R+	1	16.7	2.2	8.3	50.5	1.3	3	50.5
772+75	EB	R+	1	16.7	2.2	8.3	50.5	1.3	3	50.5
777+20	WB	L+	2	16.7	2.2	8.3			3	
786+61	WB	L+	1	19.4	2.6	9.7	50.5	1.3	3	50.5
778+32	EB	R+	1	11.1	1.5	5.6	50.5	1.3	3	50.5
781+05 (X1)	EB	R+	1	11.1	1.5	5.6	50.5	1.3	3	50.5
790+88	EB	L+	1	16.7	2.2	8.3	50.5	1.3	3	50.5
849+91	WB	L+	2	16.7	2.2	8.3			3	
859+71	WB	L+	2	18.3	2.5	9.2			3	
SUBTOTAL				792.2	106.7	396.1	1515.0	39.8	132	1515.0

SNO-GO DRAIN

STATION	DIRECTION	SIDE	MINOR CONCRETE (MINOR STRUCTURE)	PLACE PCC DIKE (TYPE E)	ROCK SLOPE PROTECTION (1/4 TON, METHOD B)	ROCK SLOPE PROTECTION FABRIC	DELINEATOR (CLASS 2)
			CY	LF	CY	SQYD	EA
399+07	WB	R+	18.5	35.5	14.5	39.5	3
445+52	WB	R+	18.5	35.5	14.5	39.5	3
446+22	EB	R+	18.5	35.5	14.5	39.5	3
488+34	EB	R+	18.5	35.5	14.5	39.5	3
502+21	WB	L+	18.5	35.5	14.5	39.5	3
501+08	EB	R+	18.5	35.5	14.5	39.5	3
536+41	EB	R+	18.5	35.5	14.5	39.5	3
660+40	EB	R+	18.5	35.5	14.5	39.5	3
745+28	EB	L+	18.5	35.5	14.5	39.5	3
829+40	WB	R+	18.5	35.5	14.5	39.5	3
822+68	EB	R+	18.5	35.5	14.5	39.5	3
SUBTOTAL			203.5	350.5	159.5	435	33

CHAIN LINK FENCE (TYPE CL-6)

STATION	SIDE	REMOVE CHAIN LINK FENCE	CHAIN LINK FENCE (TYPE CL-6)
		LF	LF
"EB1" 413+75.00 TO 416+00.00	L+	225	225
"EB1" 417+20.00 TO 426+00.00	L+	880	880
TOTAL		1105	1105

2 REMOVE TEMPORARY RAILING (TYPE K)

STATION	DIRECTION	SIDE	LF
339+97 TO 368+75	WB	L+	2,878
371+50 TO 400+59	WB	L+	2,909
406+20 TO 422+14	WB	L+	1,594
TOTAL			7,381

SALVAGE PORTABLE CONCRETE BARRIER (TYPE 60K, PINNED)

STATION	DIRECTION	SIDE	LF
332+74.6-340+24.6	WB	R+	750
SUBTOTAL FROM CONSTRUCTION QUANTITIES			720
TOTAL			1470

2 **REVISED PER ADDENDUM No. 2 DATED SEPTEMBER 10, 2009**

SUMMARY OF QUANTITIES

Q-4

REVISED BY | DATE REVISED
P. FORTUNE | J. MA
CALCULATED-DESIGNED BY | CHECKED BY
FUNCTIONAL SUPERVISOR: ERIC Y. WONG

STATE OF CALIFORNIA - DEPARTMENT OF TRANSPORTATION
NORTH REGION
OFFICE OF DESIGN WEST
DESIGN BRANCH S4

LAST REVISION 00-00-00 | DATE PLOTTED => 09-SEP-2009 | TIME PLOTTED => 15:31

Dist	COUNTY	ROUTE	POST MILES TOTAL PROJECT	SHEET No.	TOTAL SHEETS
03	Pla,Nev	80	56.1/66.3	920	1082

REGISTERED CIVIL ENGINEER 1-15-09 DATE

4-13-09
PLANS APPROVAL DATE

REGISTERED PROFESSIONAL ENGINEER P. FORTUNE No. 65464 Exp. 9-30-09 CIVIL STATE OF CALIFORNIA

THE STATE OF CALIFORNIA OR ITS OFFICERS OR AGENTS SHALL NOT BE RESPONSIBLE FOR THE ACCURACY OR COMPLETENESS OF SCANNED COPIES OF THIS PLAN SHEET.

CONCRETE BARRIER

STATION FROM	STATION TO	SIDE	CONCRETE BARRIER (TYPE 60E, MODIFIED)	CONCRETE BARRIER (TYPE 60C)	CONCRETE BARRIER (TYPE 60SC, MODIFIED)	CONCRETE BARRIER (TYPE 60S)	CONCRETE BARRIER (TYPE 732B, MODIFIED)	SHOULDER BARRIER (TYPE 732 LSB)	SHOULDER BARRIER (TYPE 732 LSB, MODIFIED)	EROSION CONTROL (NETTING) 2	
			LF							SQYD	
WEST BOUND											
332+74.60	340+24.60	R+				750					
343+96.88	352+84.62	L+			888					~~592~~	1283
353+09.62	368+75.64	L+			1566					~~1044~~	2262
356+80.00	371+05.00	R+			1425					~~950~~	2058
371+50.00	376+85.12	L+			535					~~357~~	773
377+10.12	383+83.16	L+			673					~~449~~	972
384+08.16	393+83.20	L+			975					~~650~~	1408
394+05.32	400+59.10	L+			654					~~436~~	945
399+07.50	414+50.00	R+			1543					~~1028~~	2228
414+50.00	421+20.00	R+					670				
421+20.00	432+50.00	R+			1130					~~753~~	1632
406+20.00	415+58.20	L+			938					~~625~~	1355
415+82.47	422+14.40	L+			632					~~421~~	913
421+20.00	432+50.00	R+			1130					~~753~~	1632
448+25.00	458+00.00	L+			975					~~650~~	1408
477+84.10	478+30.76	L+	10	37							
489+64(S3)	501+00.00	L+			1136					~~757~~	1641
532+00.00	535+00.00	L+			300					~~200~~	433
543+63.70	545+50.00	R+			186					~~124~~	269
553+25.00	558+35.00	L+			510					~~340~~	737
581+12.50	586+50.00	L+			538					~~358~~	776
622+45.00	626+15.91	L+					371				
628+85.15	630+00.00	L+					115				
630+00.00	635+06.00	L+			506					~~337~~	731
643+00.00	644+40.00	R+			140					~~93~~	202
649+41.00	652+53.35	R+			312					~~208~~	451
654+11.68	657+00.00	R+					288				
657+00.00	662+10.00	R+			510					~~340~~	737
662+10.00	664+10.00	R+							200		
667+12.50	669+70.00	R+			258					~~172~~	372
669+70.00	672+50.00	R+							280		
672+50.00	681+50.00	R+			900					~~600~~	1300
679+57.50	681+45.00	L+			188					271	
681+50.00	684+42.22	R+					292				
688+29.13	692+70.00	L+					441				
692+70.00	703+00.00	L+			1030					~~687~~	1488
724+73.54	725+20.32	L+	10	37							
751+37.50	754+68.43	R+					331				
757+44.00	561+46.00	L+					402				
757+95.00	761+46.60	R+					352				
778+13.30	788+02.80	R+					990				
799+03.86	802+99.17	R+					395				
805+02.60	811+75.00	R+			672					~~448~~	971
811+75.00	814+35.00	R+						260			
829+40.00	833+00.00	R+			360					~~240~~	520
833+00.00	842+70.00	R+						970			
831+00.00	842+25.00	L+			1125					~~750~~	1625
848+27.00	850+70.00	R+			243					~~162~~	351
WB SUBTOTAL			20	74	21977	750	4647	1230	480	~~14526~~	31744

CONCRETE BARRIER

STATION FROM	STATION TO	SIDE	CONCRETE BARRIER (TYPE 60E, MODIFIED)	CONCRETE BARRIER (TYPE 60C)	CONCRETE BARRIER (TYPE 60SC, MODIFIED)	CONCRETE BARRIER (TYPE 60S)	CONCRETE BARRIER (TYPE 732B, MODIFIED)	SHOULDER BARRIER (TYPE 732 LSB)	SHOULDER BARRIER (TYPE 732 LSB, MODIFIED)	EROSION CONTROL (NETTING) 2	
			LF							SQYD	
EAST BOUND											
350+65.00	353+30.00	R+			265					~~177~~	383
377+20.00	381+50.00	R+			430					~~287~~	621
398+50.00	420+50.00	R+			2200					~~1467~~	3178
446+23.00	453+00.00	L+			677					~~451~~	978
516+62.00	519+33.61	R+					271.61				
536+00.00	538+25.00	L+			225					~~150~~	325
542+80.00	550+00.00	R+			720					~~480~~	1040
544+50.00	547+80.00	L+			330					~~220~~	477
554+25.00	557+00.00	L+			275					~~183~~	397
564+30.00	566+30.00	L+			200					~~133~~	289
576+00.00	589+50.00	L+			1350					~~900~~	1950
583+00.00	590+00.00	R+			650					~~433~~	939
601+25.00	606+05.00	L+			480					~~320~~	693
610+90.00	624+60.00	L+			1370					~~913~~	1979
637+90.00	638+80.00	L+			90					~~60~~	130
638+80.00	641+20.00	L+						240			
641+20.00	646+40.00	L+			520					~~347~~	751
648+25.00	651+20.00	R+					295				
661+15.00	667+50.00	L+			635					~~423~~	917
662+20.00	667+60.00	R+			540					~~360~~	780
672+15.00	676+40.00	L+						425			
676+40.00	678+10.00	L+			170					~~113~~	246
673+25.00	677+62.50	RT			438					~~292~~	632
717+46.97	717+93.64	R+	10	37							
755+00.00	757+00.00	R+			200					289	
760+25.00	763+00.00	R+			275					397	
749+35.00	757+50.00	L+			815					~~543~~	1177
757+50.00	759+50.00	L+						200			
759+50.00	769+75.00	L+			1025					~~683~~	1481
769+75.00	772+90.00	L+					315				
787+75.00	789+25.00	R+			150					~~100~~	217
789+25.00	790+75.00	R+					150				
794+50.00	799+00.00	R+			450					650	
800+39.00	812+30.00	R+			1191					~~794~~	1720
812+30.00	814+55.00	R+					225				
824+90.00	832+20.00	R+			730					~~487~~	1054
832+20.00	836+70.00	R+						450			
825+50.00	836+33.00	L+			1083					~~722~~	1564
836+70.00	838+20.00	R+			150					~~100~~	217
841+75.00	845+25.00	R+			350					~~233~~	506
EB SUBTOTAL			10	37	17984	0	1257	1315	0	~~11372~~	25977
SUBTOTAL			30	111	39960	750	5903	2545	480	~~25899~~	57721
TOTAL FROM STAGE CONSTRUCTION QUANTITIES						720					
TOTAL			30	111	39960	1470	5903	2545	480	~~25899~~	57721

2 REVISED PER ADDENDUM No. 2 DATED SEPTEMBER 10, 2009

SUMMARY OF QUANTITIES

Q-10

STATE OF CALIFORNIA - DEPARTMENT OF TRANSPORTATION
NORTH REGION
OFFICE OF DESIGN WEST
DESIGN BRANCH S4

Caltrans

FUNCTIONAL SUPERVISOR: ERIC Y. WONG
CALCULATED-DESIGNED BY: P. FORTUNE
CHECKED BY: J. MA
REVISED BY
DATE REVISED

LAST REVISION 00-00-00
DATE PLOTTED => 09-SEP-2009
TIME PLOTTED => 15:31

Dist	COUNTY	ROUTE	POST MILES TOTAL PROJECT	SHEET No.	TOTAL SHEETS
03	Pla,Nev	80	56.1/66.3	923	1082

REGISTERED CIVIL ENGINEER 1-15-09 DATE

4-13-09
PLANS APPROVAL DATE

REGISTERED PROFESSIONAL ENGINEER P. FORTUNE No. 65464 Exp. 9-30-09 CIVIL STATE OF CALIFORNIA

THE STATE OF CALIFORNIA OR ITS OFFICERS OR AGENTS SHALL NOT BE RESPONSIBLE FOR THE ACCURACY OR COMPLETENESS OF SCANNED COPIES OF THIS PLAN SHEET.

MAINLINE ROADWAY QUANTITIES

LOCATION	CONTINUOUS REINFORCED CONCRETE PAVEMENT	CONCRETE PAVEMENT	HOT MIX ASPHALT CONCRETE (TYPE A)	TAPERS AND STRUCTURAL SECTION REPLACEMENT			CLASS 2 AGGREGATE SUBASE	TACK COAT	2 IMPORTED ~~IMPORT~~ BORROW	(N) EMBANKMENT
				TAPER	HOT MIX ASPHALT (TYPE A)	ROADWAY EXCAVATION				
	CY	CY	TON		TON	CY	CY	TON	CY	CY
"WB1" 332+74.57 TO "WB1" 335+50.00		562	493	T1	232	559				
"WB1" 335+50.00 TO 471+00		25771	14581					8.4		
"WB1" 471+00 TO 477+39.76		1200	1054	T1	404	1365				
"WB1" 477+39.76 to 478+73.76		251	221			360				
"WB1" 478+73.76 TO 484+00		986	869	T1	434	1140				
"WB1 484+00 TO 506+00		4234	2742					1.4		
"WB1" 506+00 TO 509+45.7		675	593	T6	212	700				
"WB1" 515+21.37 TO 534+00		3721	3268			5340				
"WB1"534+00 TO 542+50		1593	1399	T1	418	1740			3380	18628
"WB1" 542+50 TO 585+00		7965	7150					2.6		
"WB1" 585+00.00 TO 590+72.20		1072	942	T2	1027	1480				
"WB1" 590+72.20 TO 626+07.40		5427	5720			8259				
"WB1" 629+01.70 TO 633+00.00		750	659	T2	483	1120				
"WB1" 633+00.00 TO 647+50.00		2853	1927					0.9		
"WB1" 647+50.00 TO 652+42.20		937	822	T2	687	1105				
"WB1" 654+32.80 TO 659+00.00	878		771	T2	464	1140				
"WB1" 659+00.00 TO 676+50.00	3400		2121					1.1		
"WB1" 676+50.00 TO 684+98.30	1609		1413	T2	1217	2225				
"WB1" 688+30.10 TO 692+50.00		806	708	T2	510	1040				
"WB1" 692+50.00 TO 720+00.00		5344	2965					1.7	3245	0
"WB1" 720+00.00 TO 722+75.00		515	455	T4	370	530				
"WB1" 722+75.00 TO 724+34.00		300	261	T4	10	724	181			
"WB1" 724+34.00 TO 725+69.00		253	222			654	154			
"WB1" 725+69.00 TO 727+80.00		395	347	T4	10	1183	240			
"WB1" 727+80 TO 732+00.00		787	691	T4	551	790				
"WB1" 732+00.00 TO 746+50.00		3024	1855					1.0		
"WB1" 746+50.00 TO 754+19.50		1511	1307	T2	368	2235				
"WB1" 757+88.30 TO 761+41.10		656	710			1085			3875	8977
"WB1" 765+27.30 TO 769+35.00		764	650	T2	569	1235				
"WB1" 769+35.00 TO 797+00.00		5182	2820					1.7		
"WB1" 797+00.00 TO 802+85.80		1094	961	T5	631	1570				
"WB1" 805+23.70 TO 811+75.00		1220	1071	T5	665	1695				
"WB1" 811+75.00 TO 870+15.00		11130	7577					3.6		
"WB1" 870+15.00 TO 873+37.70		591	519	T2	365	790				

MAINLINE ROADWAY QUANTITIES

LOCATION	CONTINUOUS REINFORCED CONCRETE PAVEMENT	CONCRETE PAVEMENT	HOT MIX ASPHALT CONCRETE (TYPE A)	TAPERS AND STRUCTURAL SECTION REPLACEMENT		2 ROADWAY EXCAVATION	CLASS 2 AGGREGATE SUBASE	TACK COAT	2 IMPORTED ~~IMPORT~~ BORROW	(N) EMBANKMENT
				TAPER	HOT MIX ASPHALT (TYPE A)					
	CY	CY	TON		TON	CY	CY	TON	CY	CY
"EB1" 332+74.82 TO 335+25.00	511		449	T1	192	520				
"EB1" 335+25.00 TO 374+00	8027		3926					2.6		
"EB1" 374+00.00 TO 450+50	16721		10200					5.5		
"EB1" 450+50.00 TO 454+13.39	867		765	T1	257	961				
"EB1" 454+13.39 TO 511+68.8		9453	8302			13563				
"EB1" 516+79.38 TO 520+50.00		695	610	T1	472	665			16262	13884
"EB1" 520+50.00 TO 642+00.00		23226	13710					7.6		
"EB1" 642+00.00 TO 646+29.30		804	707	T2	380	1120				
"EB1" 648+36.70 TO 656+50.00		1640	1420	T2	859	1970				
"EB1" 656+50.00 TO 687+72.50		5902	4100					1.9		
"EB1" 687+72.50 TO 712+00.01		6104	4850						3245	0
"EB1" 712+00.00 TO 717+00.00		937	822	T5	593	1180				
"EB1" 717+00 TO 718+35.00		253	222			365				
"EB1" 718+35.00 TO 723+25.00		918	808	T2	584	1150				
"EB1" 723+25.00 TO 768+50.00		9023	6714					2.9		
"EB1" 768+50.00 TO 772+83.90		823	723	T2	409	1185				
"EB1" 777+82.40 TO 785+50.00		1536	1349	T2	1000	1880			0	10851
"EB1" 785+50.00 TO 795+75.00		1921	970					0.6		
"EB1" 795+75.00 TO 798+80.20		572	503	T2	350	740				
"EB1" 800+64.80 TO 806+50.00		1100	1160			1578				
"EB1" 806+50.00 TO 818+50		2249	1975	T2	2064	2910				
"EB1" 818+50.00 TO 856+25.00		7113	4104					2.3		
"EB1" 856+25.00 TO 866+76.0		2031	1784	T2	1181	2365				

(N) NON PAY ITEM, INFORMATION ONLY

2 REVISED PER ADDENDUM No. 2 DATED SEPTEMBER 10, 2009

SUMMARY OF QUANTITIES

Q-13

STATE OF CALIFORNIA - DEPARTMENT OF TRANSPORTATION
Caltrans
NORTH REGION
OFFICE OF DESIGN WEST
DESIGN BRANCH S4

FUNCTIONAL SUPERVISOR: ERIC Y. WONG
CALCULATED-DESIGNED BY: P. FORTUNE
CHECKED BY: J. MA
REVISED BY
DATE REVISED

LAST REVISION 00-00-00
DATE PLOTTED => 09-SEP-2009
TIME PLOTTED => 15:31

Dist	COUNTY	ROUTE	POST MILES TOTAL PROJECT	SHEET No.	TOTAL SHEETS
03	Pla,Nev	80	56.1/66.3	924	1082

REGISTERED CIVIL ENGINEER 1-15-09 DATE

4-13-09
PLANS APPROVAL DATE

REGISTERED PROFESSIONAL ENGINEER P. FORTUNE No. 65464 Exp. 9-30-09 CIVIL STATE OF CALIFORNIA

THE STATE OF CALIFORNIA OR ITS OFFICERS OR AGENTS SHALL NOT BE RESPONSIBLE FOR THE ACCURACY OR COMPLETENESS OF SCANNED COPIES OF THIS PLAN SHEET.

(N) NON-PAY ITEM, INFORMATION ONLY

MAINLINE ROADWAY QUANTITIES

LOCATION	CONTINUOUS REINFORCE CONCRETE PAVEMENT	CONCRETE PAVEMENT	2 HOT MIX ASPHALT CONCRETE (TYPE A)	TAPERS AND STRUCTURAL SECTION REPLACEMENT: TAPER	TAPERS AND STRUCTURAL SECTION REPLACEMENT: HOT MIX ASPHALT (TYPE A)	TAPERS AND STRUCTURAL SECTION REPLACEMENT: ROADWAY EXCAVATION	CLASS 2 AGGREGATE SUBASE	TACK COAT	2 IMPORTED BORROW	(N) EMBANKMENT
		CY	TON		TON	CY	CY		CY	CY
HYBRID ROCKFALL BARRIER - SEGMENT No. 1						605				
HYBRID ROCKFALL BARRIER - SEGMENT No. 2						695				
TOTAL FROM STAGE CONSTRUCTION DETOURS QUANTITIES			3091			1405			12238	
TOTAL FROM STAGE CONSTRUCTION TEMPORARY HMA RAMPS QUANTITIES			8977 ~~7617.9~~							
TOTAL FROM STAGE CONSTRUCTION SHOULDER RECONSTRUCTION QUANTITIES			85042							
TOTAL FROM STAGE CONSTRUCTION TAPERS QUANTITIES			2840							
TOTAL FROM DD-8		27.9	65.3			156	24			
TOTAL FROM DD-13			1.9							
TOTAL FROM DQ-27 & DQ-28			61.5						350	
TOTAL FROM TEMPORARY CISCO GROVE EB OFFRAMP			301.0						62	
TOTAL FROM RAMP & CROSSROAD QUANTITIES		3753	13405			1948		9.1	1170	
TOTAL FROM MAINLINE PROFILE TAPERS QUANTITIES			17967			8				
TOTAL FROM HMA DITCH, GUTTER AND SHOULDER QUANTITIES			4762							
TOTAL FROM MAINTENANCE PULLOUT QUANTITIES		367	1064							
TOTAL FROM MBGR QUANTITIES			460							
TOTAL FROM GUTTER TRANSITIONS QUANTITIES			107							
TOTAL FROM GUTTER FLARE QUANTITIES			401							
TOTAL FROM HMA DIKE (TYPE E) QUANTITIES (GUTTER FLARE TABLE)			1131							
TOTAL	32013	172017	~~270355~~ 279678			77033	599	55	43827	

2 REVISED PER ADDENDUM No. 2 DATED SEPTEMBER 10, 2009

SUMMARY OF QUANTITIES

Q-14

STATE OF CALIFORNIA - DEPARTMENT OF TRANSPORTATION
Caltrans
NORTH REGION
OFFICE OF DESIGN WEST
DESIGN BRANCH S4

FUNCTIONAL SUPERVISOR: ERIC Y. WONG
CALCULATED-DESIGNED BY: P. FORTUNE
CHECKED BY: J. MA
REVISED BY
DATE REVISED

LAST REVISION 00-00-00
DATE PLOTTED => 09-SEP-2009
TIME PLOTTED => 15:31

Dist	COUNTY	ROUTE	POST MILES TOTAL PROJECT	SHEET No.	TOTAL SHEETS
03	Pla,Nev	80	56.1/66.3	926	1082

REGISTERED CIVIL ENGINEER 1-15-09 DATE

4-13-09
PLANS APPROVAL DATE

REGISTERED PROFESSIONAL ENGINEER P. FORTUNE No. 65464 Exp. 9-30-09 CIVIL STATE OF CALIFORNIA

THE STATE OF CALIFORNIA OR ITS OFFICERS OR AGENTS SHALL NOT BE RESPONSIBLE FOR THE ACCURACY OR COMPLETENESS OF SCANNED COPIES OF THIS PLAN SHEET.

LEGEND

CRCP - CONTINUOUS REINFORCED CONCRETE PAVEMENT

2

REPLACE CONCRETE PAVEMENT

STATION		NUMBER OF SLABS (N)				VOLUME
		CATEGORY 1 (C1)	CATEGORY 2 (C2)	CATEGORY 3 (C3)	CATEGORY 4 (C4)	
FROM	TO	EACH				CY
WEST BOUND						
332+74	471+00	31	297			1533
484+00	506+00	4	42			214
521+50	554+50	0	36			161
554+50	585+00			3	57	288
633+00	647+50			5	31	192
659+00	676+50			1	10	56
692+50	720+00			0	22	99
732+00	746+50			0	29	131
769+35	797+00			0	71	320
811+75	870+15			7	110	569
	SUBTOTAL	35	375	16	330	3561
EAST BOUND						
332+74	454+50	12	26			196
532+50	554+50	6	21			134
554+50	642+00			93	280	2237
656+50	712+00			6	226	1080
723+25	768+50			3	49	252
785+50	795+75			0	8	36
803+75	856+25			0	36	162
	SUBTOTAL	18	47	102	599	4096
	TOTAL	53	422	118	929	
	TOTAL	1522				7658

(N)-NOT A SEPARATE PAY ITEM FOR INFORMATION ONLY

OBLITERATE SURFACING

STATION		OBLITERATE SURFACING
FROM	TO	SQYD
"EB1" 751+04	"EB1" 755+30	170
TOTAL FROM TEMPORARY CISCO GROVE EB OFF-RAMP		6180
	TOTAL	6335

2 CONCRETE PAVEMENT (PAVEMENT ANCHOR)

2 CRCP (PAVEMENT ANCHOR)

2 CRCP (PAVEMENT EXPANSION JOINT)

PAVEMENT ANCHORS AND PAVEMENT EXPANSION JOINT (CRCP)

STATION	~~PAVEMENT ANCHOR (JPCP)~~	~~PAVEMENT ANCHOR (CRCP)~~	~~PAVEMENT EXPANSION JOINT (CRCP)~~	MARKER (CONCRETE PAVEMENT ANCHOR)	(N) NUMBER ON TARGET PLATE
	EA	EA	LF	EA	
"EB1" 332+92		1		1	
"EB1" 333+08		1		1	
"EB1" 333+24		1		1	
"EB1" 333+40		1		1	
"EB1" 360+00		1		1	
"EB1" 378+00		1		1	56.94
"EB1" 406+00		1		1	57.47
"EB1" 434+00		1		1	58.00
"EB1" 453+64		1		1	
"EB1" 453+80		1		1	
"EB1" 453+96		1		1	
"WB1" 361+80	1			1	56.63
"WB1" 390+90	1			1	57.18
"WB1" 654+32			50		
"WB1" 654+49		1		1	62.20
"WB1" 654+65		1		1	
"WB1" 684+66		1		1	
"WB1" 684+82		1		1	62.80
"WB1" 684+99			65		
TOTAL	2	15	115	17	

ROCK SLOPE PROTECTION

LOCATION	ROCK SLOPE PROTECTION	
	FABRIC	(1/4 T, METHOD B)
	SQYD	CY
"EB1" 605+90 TO 606+65		120
"EB1" 664+15 TO 665+50		350
"WB1" 643+20 TO 644+50		275
"EB1" 687+50 TO 691+75		1325
"WB1" 695+75 TO 698+25		556
"WB1" 706+60 TO 713+00		1040
"WB1" 709+50 TO 721+50		1700
"WB1" 869+50 TO 872+00		925
"EB1" 832+00 TO 836+50		921
"EB1" 863+50 TO 867+00		960
TOTAL FROM SNO-GO QUANTITIES	435	159.5
TOTAL FROM GUTTER FLARE QUANTITIES	4369	568
TOTAL FROM DQ-27 & DQ-28	719.8	
TOTAL FROM DD-5	293	
TOTAL FROM DD-8	294	
TOTAL	6111	8900

** FOR TOTAL QUANTITY, SEE ROADWAY SUMMARY TABLE

2 REVISED PER ADDENDUM No. 2 DATED SEPTEMBER 10, 2009

SUMMARY OF QUANTITIES

Q-16

STATE OF CALIFORNIA - DEPARTMENT OF TRANSPORTATION
NORTH REGION
OFFICE OF DESIGN WEST
DESIGN BRANCH S4

FUNCTIONAL SUPERVISOR: ERIC Y. WONG
CALCULATED-DESIGNED BY: P. FORTUNE
CHECKED BY: J. MA
REVISED BY
DATE REVISED

LAST REVISION 00-00-00 DATE PLOTTED => 09-SEP-2009 TIME PLOTTED => 15:32

Dist	COUNTY	ROUTE	POST MILES TOTAL PROJECT	SHEET No.	TOTAL SHEETS
03	Pla,Nev	80	56.1/66.3	929	1082

REGISTERED CIVIL ENGINEER 1-15-09 DATE

4-13-09
PLANS APPROVAL DATE

REGISTERED PROFESSIONAL ENGINEER P. FORTUNE No. 65464 Exp. 9-30-09 CIVIL STATE OF CALIFORNIA

THE STATE OF CALIFORNIA OR ITS OFFICERS OR AGENTS SHALL NOT BE RESPONSIBLE FOR THE ACCURACY OR COMPLETENESS OF SCANNED COPIES OF THIS PLAN SHEET.

MAINTENANCE PULLOUT & MEDIAN CROSSOVER

LOCATION	CONCRETE PAVEMENT	HOT MIX ASPHALT (TYPE A)	CLASS 2 AGGREGATE BASE	ROADWAY EXCAVATION	COLD PLANE ASPHALT CONCRETE PAVEMENT	PLACE HMA DIKE (TYPE E)	PLACE HMA DIKE (TYPE E)
	CY	TON	CY	CY	SQYD	LF	TON
"WB1" 420+57 TO 423+90		128	230				
"WB1" 503+00 TO 504+00		43	76				
"WB1" 620+50 TO 622+23		27		8			
"WB1" 645+05 TO 646+09		23	42				
"WB1" 725+87 TO 729+89		315			709		
"EB1" 557+75 TO 558+75		40	78			40	1
"EB1" 820+05 TO 821+05		40	71				
"WB1" 377+00 TO 383+00			867				
"WB1" 395+00 TO 398+50			305				
"WB1" 436+00 TO 444+90			693				
"WB1" 820+00 TO 828+75			832				
"EB1" 420+53 TO 445+22			4,240				
"U3" 652+50 TO 656+08			270				
"EB1" 818+75 TO 821+50			330				
MEDIAN CROSSOVER #1	136	166	250				
MEDIAN CROSSOVER #2	128	156	125				
MEDIAN CROSSOVER #3	103	126	70				
SUBTOTAL	367	1064	8,479	8	709	40	1

2 TEMPORARY ~~TEMPARARY~~ CISCO GROVE EB OFF-RAMP

LOCATION	HOT MIX ASPHALT (TYPE A)	CLASS 2 AGGREGATE BASE	ROADWAY EXCAVATION	IMPORTED BORROW	2 OBLITERATE SURFACING	REMOVE BASE AND SURFACING	REMOVE CONCRETE (CURB AND GUTTER)
	TON	CY	CY	CY	SQYD	CY	LF
"VW1" 709+71.08 TO 715+92.69	301	150	174	62	6180	102	400
SUBTOTAL	301	150	174	62	6180	102	400

2 GRIND EXISTING CONCRETE PAVEMENT

LOCATION		WIDTH	GRIND EXISTING CONCRETE PAVEMENT
		FT	SQYD
"WB1" 590+72 TO 618+80 - OUTSIDE SHOULDER		10	3120
REPLACE CONCRETE PAVEMENT			
	"EB1" STAGE 1 - 64 LOCATIONS	12	2560
	"EB1" STAGE 4 - 38 LOCATIONS	12	1520
	"WB1" STAGE 1 - 141 LOCATIONS	12	5640
	"WB1" STAGE 4 - 57 LOCATIONS	12	2280
TOTAL FROM STAGE CONSTRUCTION TAPER QUANTITIES			2378
TOTAL			17498

2 REVISED PER ADDENDUM No. 2 DATED SEPTEMBER 10, 2009

SUMMARY OF QUANTITIES

Q-19

STATE OF CALIFORNIA - DEPARTMENT OF TRANSPORTATION
Caltrans
NORTH REGION
OFFICE OF DESIGN WEST
DESIGN BRANCH S4

FUNCTIONAL SUPERVISOR: ERIC Y. WONG
CALCULATED-DESIGNED BY: P. FORTUNE
CHECKED BY: J. MA
REVISED BY
DATE REVISED

LAST REVISION 00-00-00
DATE PLOTTED => 10-SEP-2009
TIME PLOTTED => 10:06