Dist	COUNTY	ROUTE	POST MILES TOTAL PROJECT	SHEET No.	TOTAL SHEETS
03	Pla,Nev	80	56.1/66.3	160	1082

REGISTERED CIVIL ENGINEER 1-15-09 DATE

4-13-09
PLANS APPROVAL DATE

REGISTERED PROFESSIONAL ENGINEER P. FORTUNE No. 65464 Exp. 9-30-09 CIVIL STATE OF CALIFORNIA

THE STATE OF CALIFORNIA OR ITS OFFICERS OR AGENTS SHALL NOT BE RESPONSIBLE FOR THE ACCURACY OR COMPLETENESS OF SCANNED COPIES OF THIS PLAN SHEET.

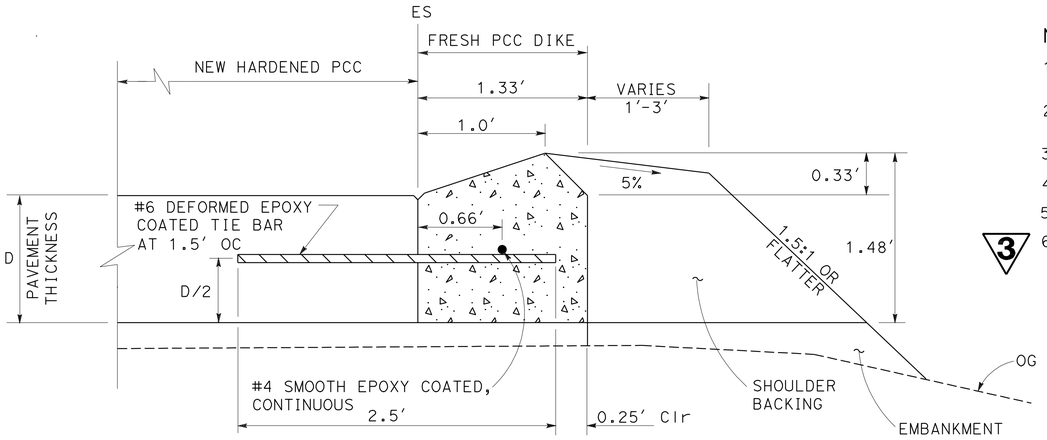

PLACE PCC DIKE (TYPE E) DETAIL

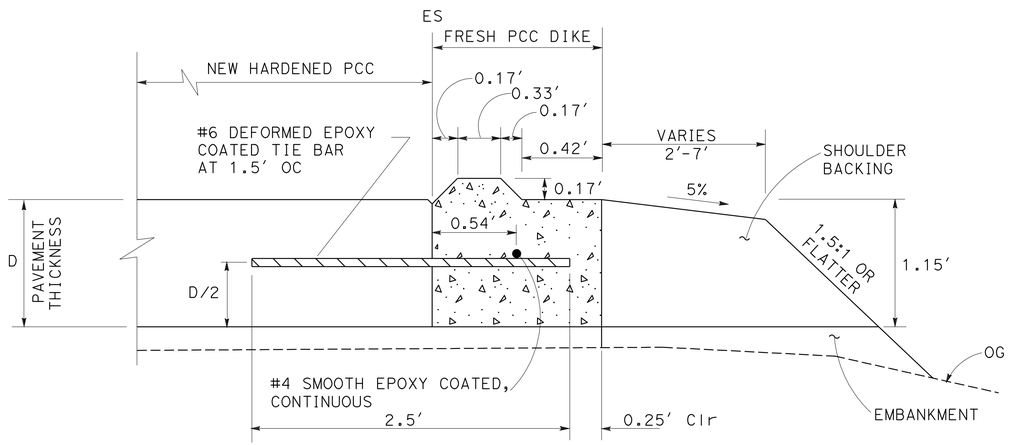

PLACE PCC DIKE (TYPE C) DETAIL

3 EXTEND PAVEMENT TRANSVERSE WEAKENED PLANE JOINT THROUGH DIKE. LIQUID JOINT SEALANT SHALL BE PLACED UP TO 3/8" BELOW THE TOP OF DIKE
~~EXTEND PAVEMENT TRANSVERSE JOINT THROUGH DIKE~~

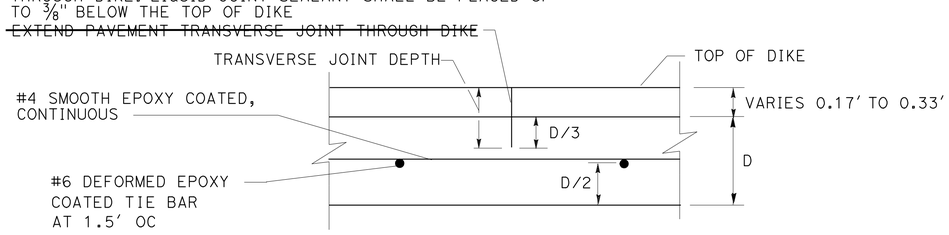

SECTION A-A

NOTES

1. SHOULDER TRANSVERSE WEAKENED PLANE JOINTS SHALL BE EXTENDED THROUGH THE DIKE.
2. FOR TRANSVERSE JOINT SEAL DETAILS SEE CONSTRUCTION DETAILS AND SPECIAL PROVISIONS. SEE STD PLAN P1 AND P10 FOR DETAILS NOT SHOWN.
3. ALL TYPES OF PCC DIKE SHALL BE PLACED ON 0.5′ OF COMPACTED CLASS 2 AB
4. SEE TYPICAL CROSS SECTIONS FOR PAVEMENT THICKNESS.
5. SEE STANDARD PLAN A87B FOR DETAILS NOT SHOWN ON PLANS.
6. THROUGH SECTIONS OF CRCP TRANSVERSE WEAKENED PLANE JOINTS WILL BE PLACED THROUGH THE DIKE EVERY 15′. 3

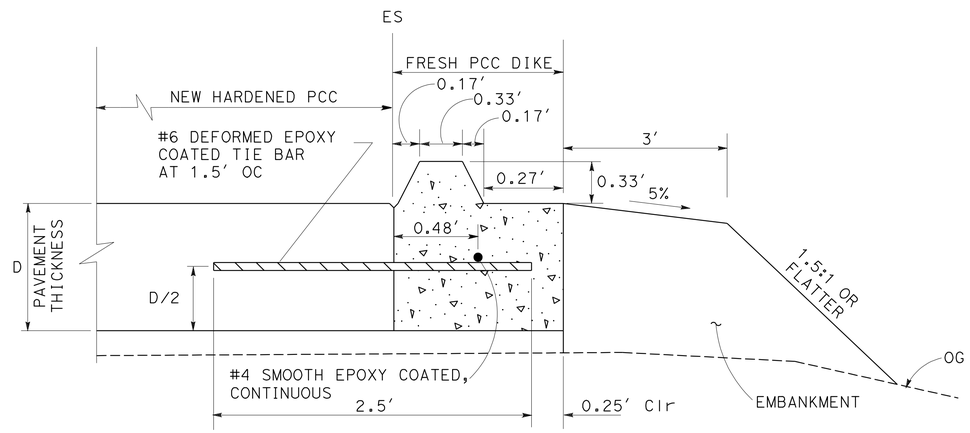

PLACE PCC DIKE (TYPE F) DETAIL

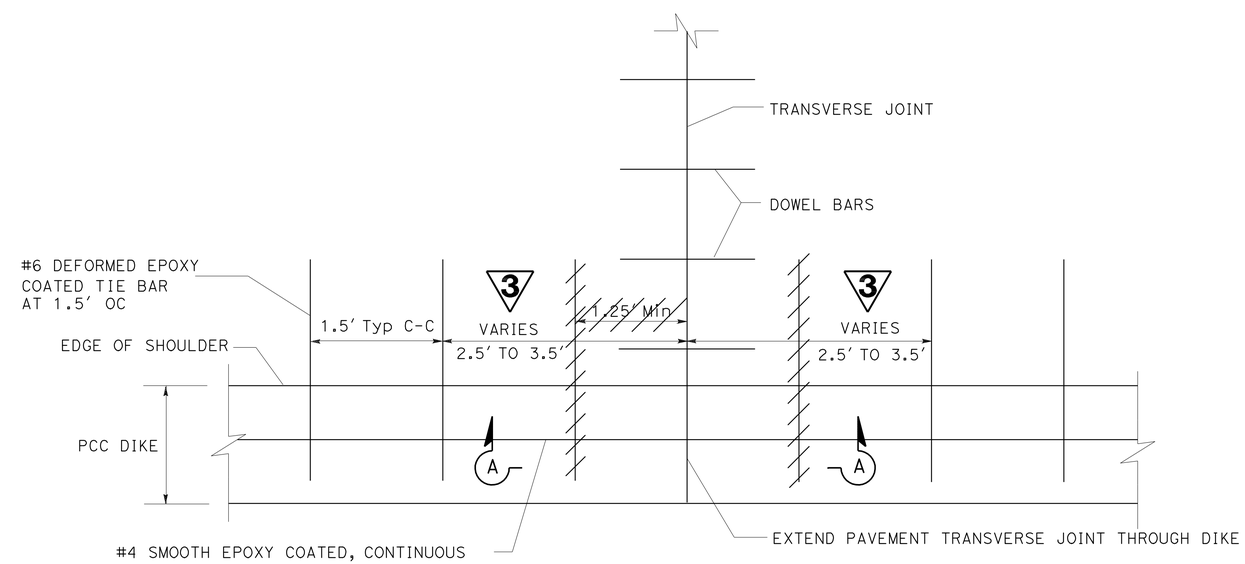

TYPICAL PCC DIKE LAYOUT

3 SEE NOTE 6

CONSTRUCTION DETAILS

NO SCALE

C-4

3 REVISED PER ADDENDUM No. 3 DATED OCTOBER 6, 2009

STATE OF CALIFORNIA - DEPARTMENT OF TRANSPORTATION
NORTH REGION
OFFICE OF DESIGN WEST
DESIGN BRANCH S5

Caltrans

FUNCTIONAL SUPERVISOR: ERIC Y. WONG
CALCULATED-DESIGNED BY: L. NGUYEN
CHECKED BY: P. FORTUNE
REVISED BY
DATE REVISED

LAST REVISION 00-00-00
DATE PLOTTED => 01-OCT-2009
TIME PLOTTED => 13:37

Dist	COUNTY	ROUTE	POST MILES TOTAL PROJECT	SHEET No.	TOTAL SHEETS
03	Pla,Nev	80	56.1/66.3	161	1082

REGISTERED CIVIL ENGINEER 1-15-09 DATE

4-13-09
PLANS APPROVAL DATE

REGISTERED PROFESSIONAL ENGINEER P. FORTUNE No. 65464 Exp. 9-30-09 CIVIL STATE OF CALIFORNIA

THE STATE OF CALIFORNIA OR ITS OFFICERS OR AGENTS SHALL NOT BE RESPONSIBLE FOR THE ACCURACY OR COMPLETENESS OF SCANNED COPIES OF THIS PLAN SHEET.

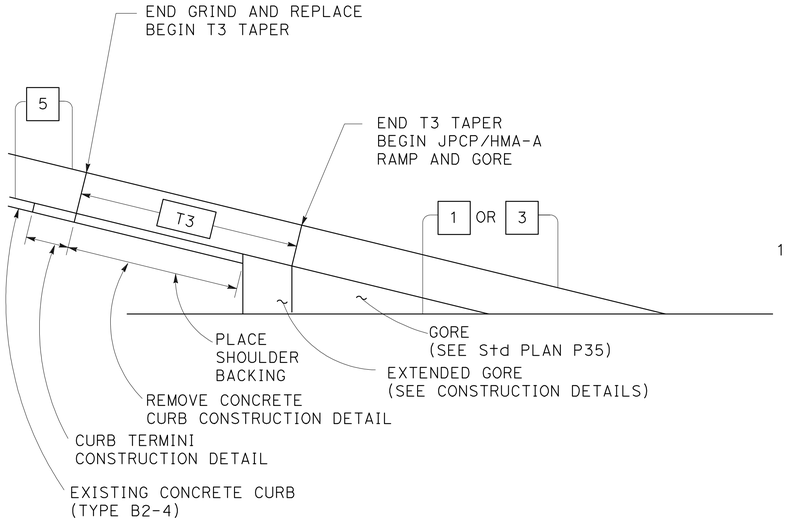

TRANSITION FROM MAINLINE OVERLAY TO RAMP GRIND AND REPLACE

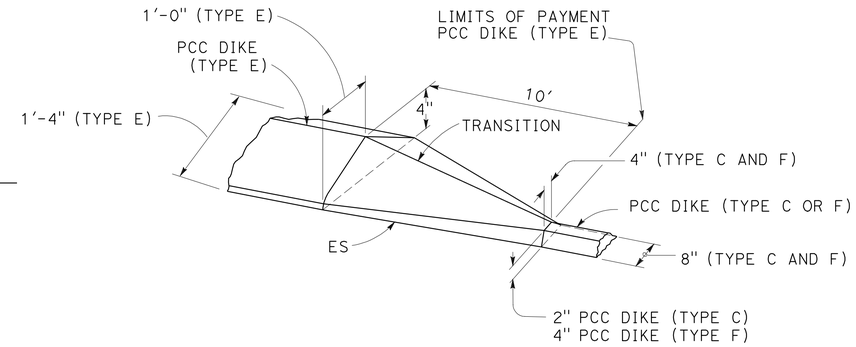

PCC DIKE TRANSITION TYPE E, TYPE C OR TYPE F

(SEE LAYOUT SHEETS FOR LOCATION)

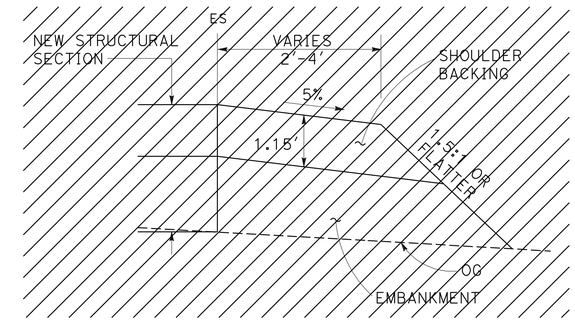

3 ~~SHOULDER BACKING DETAIL~~

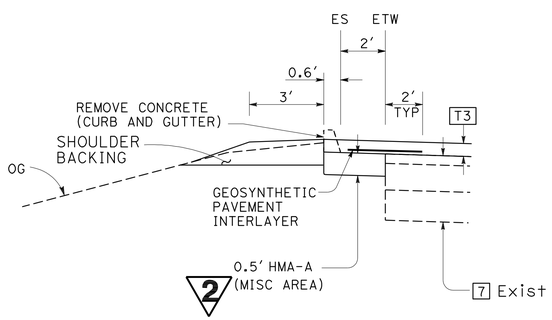

2 REMOVE CONCRETE CURB CONSTRUCTION DETAIL

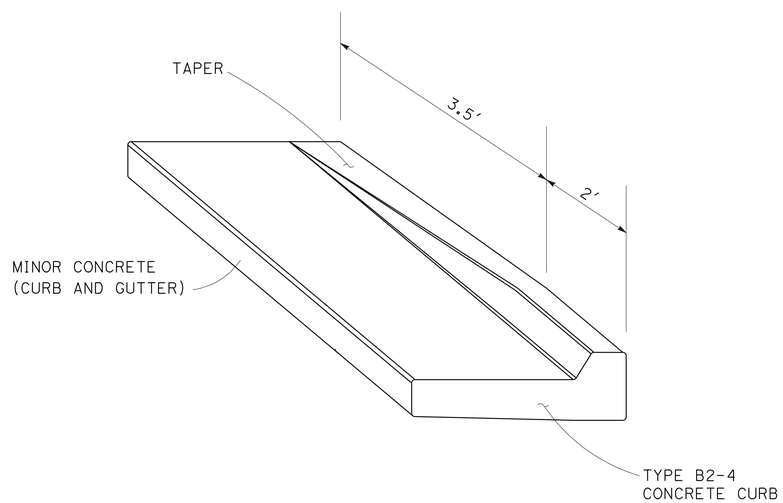

CURB TERMINI CONSTRUCTION DETAIL

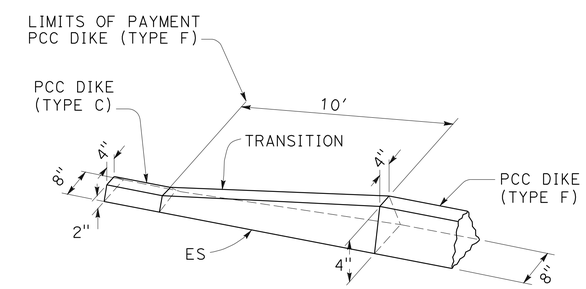

PCC DIKE TRANSITION TYPE C TO TYPE F

(SEE LAYOUT SHEETS FOR LOCATION)

3 REVISED PER ADDENDUM No. 3 DATED OCTOBER 6, 2009

2 REVISED PER ADDENDUM No. 2 DATED SEPTEMBER 10, 2009

CONSTRUCTION DETAILS

NO SCALE

C-5

STATE OF CALIFORNIA - DEPARTMENT OF TRANSPORTATION
NORTH REGION
OFFICE OF DESIGN WEST
DESIGN BRANCH S5

Caltrans

FUNCTIONAL SUPERVISOR: ERIC Y. WONG

CALCULATED-DESIGNED BY: L. NGUYEN
CHECKED BY: P. FORTUNE

REVISED BY | DATE REVISED

LAST REVISION 00-00-00
DATE PLOTTED => 01-OCT-2009
TIME PLOTTED => 13:37

Dist	COUNTY	ROUTE	POST MILES TOTAL PROJECT	SHEET No.	TOTAL SHEETS
03	Pla,Nev	80	56.1/66.3	161A	1082

REGISTERED CIVIL ENGINEER 1-15-09 DATE

4-13-09
PLANS APPROVAL DATE

REGISTERED PROFESSIONAL ENGINEER
P. FORTUNE
No. 65464
Exp. 9-30-09
CIVIL
STATE OF CALIFORNIA

THE STATE OF CALIFORNIA OR ITS OFFICERS OR AGENTS SHALL NOT BE RESPONSIBLE FOR THE ACCURACY OR COMPLETENESS OF SCANNED COPIES OF THIS PLAN SHEET.

3

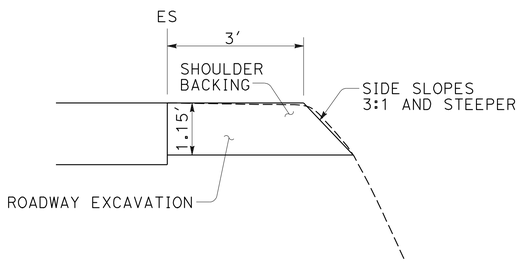

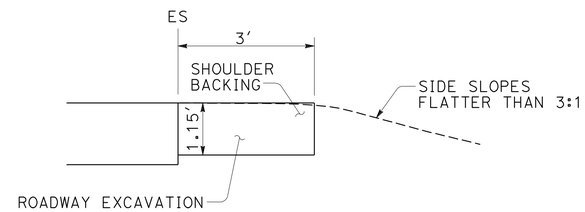

TYPICAL SHOULDER BACKING AT STRUCTURAL SECTION REPLACEMENTS

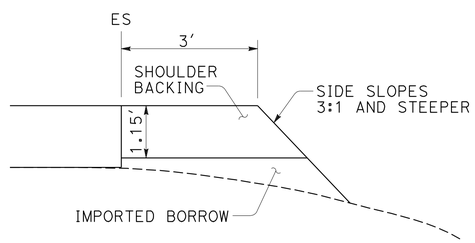

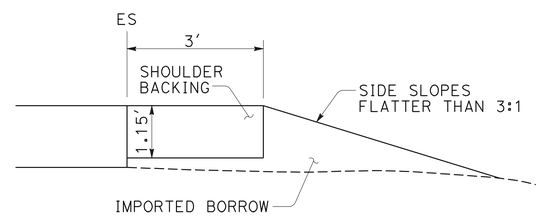

TYPICAL SHOULDER BACKING AT OVERLAY SECTIONS

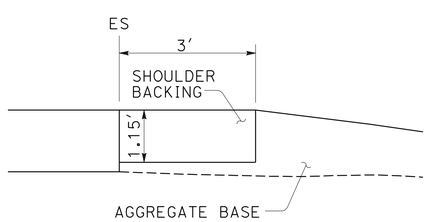

TYPICAL SHOULDER BACKING AT MAINTENANCE PULLOUTS

NOTE:

THE WIDTH OF SHOULDER BACKING ADJACENT TO RAMPS IS 2'.

SHOULDER BACKING CONSTRUCTION DETAILS

3 **ADDED PER ADDENDUM No. 3 DATED OCTOBER 6, 2009**

CONSTRUCTION DETAILS

NO SCALE

C-5A

STATE OF CALIFORNIA - DEPARTMENT OF TRANSPORTATION
NORTH REGION
OFFICE OF DESIGN WEST
DESIGN BRANCH S5

Caltrans

FUNCTIONAL SUPERVISOR: ERIC Y. WONG

CALCULATED-DESIGNED BY: L. NGUYEN
CHECKED BY: P. FORTUNE

REVISED BY
DATE REVISED

LAST REVISION 00-00-00
DATE PLOTTED => 01-OCT-2009
TIME PLOTTED => 13:37

Dist	COUNTY	ROUTE	POST MILES TOTAL PROJECT	SHEET No.	TOTAL SHEETS
03	Pla,Nev	80	56.1/66.3	196	1082

CERTIFIED ENGINEERING GEOLOGIST 1-14-09 DATE

4-13-09
PLANS APPROVAL DATE

PROFESSIONAL GEOLOGIST W.P. WEBSTER No. 2485 Exp. 2-28-11 CERTIFIED ENGINEERING GEOLOGIST STATE OF CALIFORNIA

THE STATE OF CALIFORNIA OR ITS OFFICERS OR AGENTS SHALL NOT BE RESPONSIBLE FOR THE ACCURACY OR COMPLETENESS OF SCANNED COPIES OF THIS PLAN SHEET.

NOTES:

1. FOUNDATION MATERIALS CONSIST OF SILTY-SAND/CLAYEY-SAND WITH INGENOUS COBBLES AND BOULDERS.
2. EXACT LOCATION OF THE POST TO BE DETERMINED BY THE ENGINEER.
3. HYBRID ROCK-FALL BARRIER SYSTEM SHALL BE CAPABLE OF ABSORBING A KINETIC ENERGY OF 37 FOOT-TONS.
4. HYBRID ROCK-FALL BARRIER SYSTEM SHALL BE INSTALLED IN ACCORDANCE WITH THE MANUFACTURER'S DETAILS AND SPECIFICATIONS OR AS SHOWN ON THESE PLANS.
5. ANCHOR CAPACITIES TO BE SPECIFIED BY THE BARRIER SYSTEM MANUFACTURER.
6. SEE BARRIER SYSTEM MANUFACTURER FOR FOOTING DESIGNS.
7. ANCHOR PULLOUT STRENGTH TO BE TESTED BY THE CONTRACTOR.

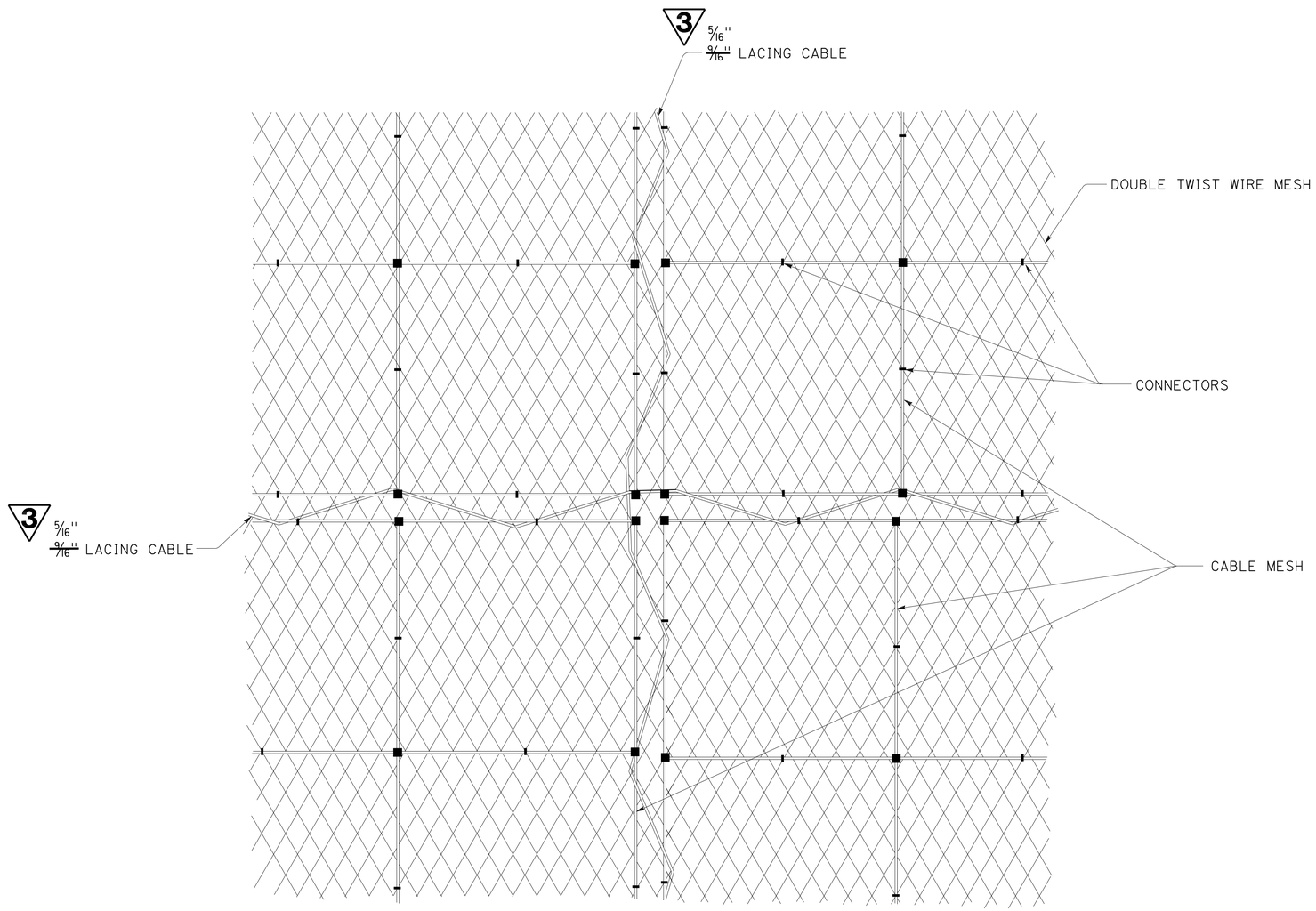

PANEL CONNECTION DETAIL

3 **REVISED PER ADDENDUM No. 3 DATED OCTOBER 6, 2009**

HYBRID ROCK-FALL BARRIER SYSTEM CONSTRUCTION DETAILS

NO SCALE

C-40

STATE OF CALIFORNIA - DEPARTMENT OF TRANSPORTATION

Caltrans

FUNCTIONAL SUPERVISOR

CALCULATED-DESIGNED BY B. WEBSTER

CHECKED BY D. BRITTSAN

REVISED BY

DATE REVISED

LAST REVISION 00-00-00

DATE PLOTTED => 01-OCT-2009
TIME PLOTTED => 13:38

Dist	COUNTY	ROUTE	POST MILES TOTAL PROJECT	SHEET No.	TOTAL SHEETS
03	Pla,Nev	80	56.1/66.3	201	1082

REGISTERED CIVIL ENGINEER 1-15-09 DATE

4-13-09
PLANS APPROVAL DATE

REGISTERED PROFESSIONAL ENGINEER P. FORTUNE No. 65464 Exp. 9-30-09 CIVIL STATE OF CALIFORNIA

THE STATE OF CALIFORNIA OR ITS OFFICERS OR AGENTS SHALL NOT BE RESPONSIBLE FOR THE ACCURACY OR COMPLETENESS OF SCANNED COPIES OF THIS PLAN SHEET.

3

EARTHWORK TABLE BY STAGE
(FOR INFORMATION ONLY)

STAGE/PHASE	STATION	DESCRIPTION	MATERIAL GENERATED: REMOVE ASPHALT CONCRETE SURFACING (CY)	MATERIAL GENERATED: ROADWAY EXCAVATION (AC SHOULDER) (CY)	MATERIAL GENERATED: ROADWAY EXCAVATION (PCC LANES) (CY)	MATERIAL GENERATED: REPLACE CONCRETE PAVEMENT (FAILED PCC SLABS) (CY)	MATERIAL REQUIRED: EMBANKMENT (EARTHWORK OR SHOULDER BACKING) (CY)	MATERIAL REQUIRED: CLASS 2 AGGREGATE BASE (HMA GUTTER, ITCH AND SHOULDER, MAINTENANCE PULLOUT AND MEDIAN CROSSOVERS, GUTTER FLARES, GUTTER TRANSITIONS, AND RAMPS) (CY)	MATERIAL REQUIRED: IMPORTED BORROW * (CY)	MATERIAL REQUIRED: SHOULDER BACKING (CY)	MATERIAL REQUIRED: CLASS 2 AGGREGATE BASE (CY)
STAGE 1/PHASE 1	"EB1" 334+65 TO 698+00	RECONSTRUCT EASTBOUND OUTSIDE SHOULDER	9,500						13,598		1,188
		REPLACE CONCRETE PAVEMENT (FAILED SLABS)				3,376					
	"WB1" 334+24 TO 698+00	RECONSTRUCT WESTBOUND OUTSIDE & INSIDE SHOULDER	18,600								
	"CO1" 6+99 TO 18+63	DETOUR CONSTRUCTION "CO1"					6,424	590			
	"CO2" 24+81 TO 37+11	DETOUR CONSTRUCTION "CO2"					5,814	598			
STAGE 2/PHASE 1	"EB1" 332+75 TO 648+71	CONSTRUCT INSIDE SHOULDER AND #1 LANE		2,329	4,994		9,661	10,530	14,428	4,890	10,530
STAGE 2/PHASE 2		CONSTRUCT OUTSIDE SHOULDER AND #2 LANE		5,524	5,117		8,214				
STAGE 3/PHASE 1	"WB1" 332+75 TO 685+39	REPLACE CONCRETE PAVEMENT (FAILED SLABS)				2,444			8,874	4,500	9,570
		CONSTRUCT INSIDE SHOULDER AND #1 LANE		5,879	7,055		6,783	9,570			
STAGE 3/PHASE 2		CONSTRUCT OUTSIDE SHOULDER AND #2 LANE		3,961	7,078		5,704				
STAGE 4/PHASE 1	"EB1" 698+00 TO 866+59	RECONSTRUCT OUTSIDE SHOULDER	4,500								364
		REPLACE CONCRETE PAVEMENT (FAILED SLABS)				4,816					
	"WB1" 689+08 TO 873+20	RECONSTRUCT OUTSIDE & INSIDE SHOULDER	9,400								
	"CO3" 31+64 TO 41+91	DETOUR CONSTRUCTION "CO3"						364			
STAGE 5/PHASE 1	"EB1" 709+50 TO 868+88	CONSTRUCT INSIDE SHOULDER AND #1 LANE		2,372	2,843		4,851	2,110	6,684	2,900	2,110
STAGE 5/PHASE 2		CONSTRUCT OUTSIDE SHOULDER AND #2 LANE		2,372	2,843		4,065				
STAGE 6/PHASE 1	"CO4" 40+00 TO 50+36	DETOUR CONSTRUCTION "CO4"						332	6,326	2,220	4,982
	"WB1" 719+00 TO 875+50	REPLACE CONCRETE PAVEMENT (FAILED SLABS)				1,118					
		CONSTRUCT INSIDE SHOULDER AND #1 LANE		2,484	2,979		3,385	4,650			
STAGE 6/PHASE 2		CONSTRUCT OUTSIDE SHOULDER AND #2 LANE		2,613	2,979		4,528				
STAGE 7/PHASE 1	"WB1" 685+39 TO 719+00 "EB1" 684+71 TO 712+00	CONSTRUCT #1 LANE & INSIDE Shld ON WB FROM 685+39 TO 719+00		182	218		912	760	2,662	1,270	760
		CONSTRUCT #1 LANE & INSIDE Shld ON EB FROM 684+71 TO 712+00					2,754				
STAGE 7/PHASE 2	"WB1" 685+39 TO 719+00 "EB1" 684+71 TO 712+00	CONSTRUCT #2 LANE & INSIDE Shld ON WB FROM 685+39 TO 719+00		182	218		314	760		1,270	760
		CONSTRUCT #2 LANE & INSIDE Shld ON EB FROM 684+71 TO 712+00					841				
								TOTAL	52,572	17,050	30,264

*A 0.9 GRADING FACTOR IS INCORPORATED INTO THE IMPORTED BORROW VALUE FOR STAGES 2, 3, 5, 6, AND 7.

3 REVISED PER ADDENDUM No. 3 DATED OCTOBER 6, 2009

CONSTRUCTION DETAILS
NO SCALE
C-45

REVISED BY | DATE REVISED
L. NGUYEN | P. FORTUNE
CALCULATED-DESIGNED BY | CHECKED BY
FUNCTIONAL SUPERVISOR
ERIC Y. WONG

STATE OF CALIFORNIA - DEPARTMENT OF TRANSPORTATION
NORTH REGION
OFFICE OF DESIGN WEST
DESIGN BRANCH S5
Caltrans

LAST REVISION 00-00-00 | DATE PLOTTED => 01-OCT-2009 | TIME PLOTTED => 13:38

Dist	COUNTY	ROUTE	POST MILES TOTAL PROJECT	SHEET No.	TOTAL SHEETS
03	Pla,Nev	80	56.1/66.3	207A	1082

REGISTERED CIVIL ENGINEER 1-15-09 DATE

4-13-09
PLANS APPROVAL DATE

REGISTERED PROFESSIONAL ENGINEER
P. FORTUNE
No. 65464
Exp. 9-30-09
CIVIL
STATE OF CALIFORNIA

THE STATE OF CALIFORNIA OR ITS OFFICERS OR AGENTS SHALL NOT BE RESPONSIBLE FOR THE ACCURACY OR COMPLETENESS OF SCANNED COPIES OF THIS PLAN SHEET.

3

TEMPORARY WATER POLUTION CONTROL ITEMS

LOCATION	TEMPORARY DRAINAGE INLET PROTECTION	TEMPORARY SILT FENCE	TEMPORARY CHECK DAM	TEMPORARY FIBER ROLL	TEMPORARY HYDRAULIC MULCH (BONDED FIBER MATRIX)	TEMPORARY GRAVEL BAG BERM
	EA	LF	LF	LF	SQFT	LF
"WB		100,300	3600	3350		
"EB1"		140,000	2960	1202		
CO1		900	40	1678		
CO2		1,100		1270		
CO3		1,100				
CO4		600				
TOTAL	70*	244,000	6600	7500	167,500*	21,910*

* COMBINED QUANTITY, NOT SPLIT BY WESTBOUND OR EASTBOUND DIRECTION

3 ADDED PER ADDENDUM No. 3 DATED OCTOBER 6, 2009

TEMPORARY EROSION CONTROL QUANTITIES

ECQ-1A

STATE OF CALIFORNIA - DEPARTMENT OF TRANSPORTATION
Caltrans
NORTH REGION
OFFICE OF DESIGN WEST
DESIGN BRANCH S4

FUNCTIONAL SUPERVISOR: ERIC Y. WONG

CALCULATED-DESIGNED BY: P. FORTUNE
CHECKED BY: J. MA

REVISED BY
DATE REVISED

LAST REVISION 00-00-00
DATE PLOTTED => 01-OCT-2009
TIME PLOTTED => 13:38

Dist	COUNTY	ROUTE	POST MILES TOTAL PROJECT	SHEET No.	TOTAL SHEETS
03	Pla,Nev	80	56.1/66.3	923	1082

REGISTERED CIVIL ENGINEER 1-15-09 DATE

4-13-09
PLANS APPROVAL DATE

REGISTERED PROFESSIONAL ENGINEER P. FORTUNE No. 65464 Exp. 9-30-09 CIVIL STATE OF CALIFORNIA

THE STATE OF CALIFORNIA OR ITS OFFICERS OR AGENTS SHALL NOT BE RESPONSIBLE FOR THE ACCURACY OR COMPLETENESS OF SCANNED COPIES OF THIS PLAN SHEET.

MAINLINE ROADWAY QUANTITIES

LOCATION	CONTINUOUS REINFORCED CONCRETE PAVEMENT	CONCRETE PAVEMENT	HOT MIX ASPHALT CONCRETE (TYPE A)	TAPERS AND STRUCTURAL SECTION REPLACEMENT: TAPER	TAPERS AND STRUCTURAL SECTION REPLACEMENT: HOT MIX ASPHALT (TYPE A)	TAPERS AND STRUCTURAL SECTION REPLACEMENT: ROADWAY EXCAVATION	CLASS 2 AGGREGATE SUBASE	TACK COAT	IMPORTED ~~IMPORT~~ BORROW (2)	~~(N)~~ ~~EMBANKMENT~~ (3)
	CY	CY	TON		TON	CY	CY	TON	CY	~~CY~~
"WB1" 332+74.57 TO "WB1" 335+50.00		562	493	T1	232	559				
"WB1" 335+50.00 TO 471+00		25771	14581					8.4		
"WB1" 471+00 TO 477+39.76		1200	1054	T1	404	1365				
"WB1" 477+39.76 to 478+73.76		251	221			360				
"WB1" 478+73.76 TO 484+00		986	869	T1	434	1140				
"WB1 484+00 TO 506+00		4234	2742					1.4		
"WB1" 506+00 TO 509+45.7		675	593	T6	212	700				
"WB1" 515+21.37 TO 534+00		3721	3268			5340			8874	
"WB1"534+00 TO 542+50		1593	1399	T1	418	1740			~~3380~~	~~18628~~
"WB1" 542+50 TO 585+00		7965	7150					2.6		
"WB1" 585+00.00 TO 590+72.20		1072	942	T2	1027	1480				
"WB1" 590+72.20 TO 626+07.40		5427	5720			8259				
"WB1" 629+01.70 TO 633+00.00		750	659	T2	483	1120				
"WB1" 633+00.00 TO 647+50.00		2853	1927					0.9		
"WB1" 647+50.00 TO 652+42.20		937	822	T2	687	1105				
"WB1" 654+32.80 TO 659+00.00	878		771	T2	464	1140				
"WB1" 659+00.00 TO 676+50.00	3400		2121					1.1		
"WB1" 676+50.00 TO 684+98.30	1609		1413	T2	1217	2225				
"WB1" 688+30.10 TO 692+50.00		806	708	T2	510	1040			1331	
"WB1" 692+50.00 TO 720+00.00		5344	2965					1.7	~~3245~~	~~0~~
"WB1" 720+00.00 TO 722+75.00		515	455	T4	370	530				
"WB1" 722+75.00 TO 724+34.00		300	261	T4	10	724	181			
"WB1" 724+34.00 TO 725+69.00		253	222			654	154			
"WB1" 725+69.00 TO 727+80.00		395	347	T4	10	1183	240			
"WB1" 727+80 TO 732+00.00		787	691	T4	551	790				
"WB1" 732+00.00 TO 746+50.00		3024	1855					1.0		
"WB1" 746+50.00 TO 754+19.50		1511	1307	T2	368	2235				
"WB1" 757+88.30 TO 761+41.10		656	710			1085			6326	
"WB1" 765+27.30 TO 769+35.00		764	650	T2	569	1235			~~3875~~	~~8977~~
"WB1" 769+35.00 TO 797+00.00		5182	2820					1.7		
"WB1" 797+00.00 TO 802+85.80		1094	961	T5	631	1570				
"WB1" 805+23.70 TO 811+75.00		1220	1071	T5	665	1695				
"WB1" 811+75.00 TO 870+15.00		11130	7577					3.6		
"WB1" 870+15.00 TO 873+37.70		591	519	~~T2~~ T5 (3)	365	790				

MAINLINE ROADWAY QUANTITIES

LOCATION	CONTINUOUS REINFORCED CONCRETE PAVEMENT	CONCRETE PAVEMENT	HOT MIX ASPHALT CONCRETE (TYPE A)	TAPERS AND STRUCTURAL SECTION REPLACEMENT: TAPER (3)	TAPERS AND STRUCTURAL SECTION REPLACEMENT: HOT MIX ASPHALT (TYPE A)	TAPERS AND STRUCTURAL SECTION REPLACEMENT: ROADWAY EXCAVATION (2)	CLASS 2 AGGREGATE SUBASE	TACK COAT	IMPORTED ~~IMPORT~~ BORROW (2)	~~(N)~~ ~~EMBANKMENT~~ (3)
	CY	CY	TON		TON	CY	CY	TON	CY	~~CY~~
"EB1" 332+74.82 TO 335+25.00	511		449	T1	192	520				
"EB1" 335+25.00 TO 374+00	8027		3926					2.6		
"EB1" 374+00.00 TO 450+50	16721		10200					5.5		
"EB1" 450+50.00 TO 454+13.39	867		765	T1	257	961				
"EB1" 454+13.39 TO 511+68.8		9453	8302			13563			14428	
"EB1" 516+79.38 TO 520+50.00		695	610	~~T1~~T6	472	665			~~16262~~	~~13884~~
"EB1" 520+50.00 TO 642+00.00		23226	13710					7.6		
"EB1" 642+00.00 TO 646+29.30		804	707	T2	380	1120				
"EB1" 648+36.70 TO 656+50.00		1640	1420	T2	859	1970				
"EB1" 656+50.00 TO 687+72.50		5902	4100					1.9		
"EB1" 687+72.50 TO 712+00.01		6104	4850						1331	
"EB1" 712+00.00 TO 717+00.00		937	822	T5	593	1180			~~3245~~	~~0~~
"EB1" 717+00 TO 718+35.00		253	222			365				
"EB1" 718+35.00 TO 723+25.00		918	808	~~T2~~T5	584	1150				
"EB1" 723+25.00 TO 768+50.00		9023	6714					2.9		
"EB1" 768+50.00 TO 772+83.90		823	723	T2	409	1185				
"EB1" 777+82.40 TO 785+50.00		1536	1349	T2	1000	1880			6684	
"EB1" 785+50.00 TO 795+75.00		1921	970					0.6	~~0~~	~~10851~~
"EB1" 795+75.00 TO 798+80.20		572	503	T2	350	740				
"EB1" 800+64.80 TO 806+50.00		1100	1160			1578				
"EB1" 806+50.00 TO 818+50		2249	1975	T2	2064	2910				
"EB1" 818+50.00 TO 856+25.00		7113	4104					2.3		
"EB1" 856+25.00 TO 866+76.0		2031	1784	T2	1181	2365				

(N) NON PAY ITEM, INFORMATION ONLY

(3) REVISED PER ADDENDUM No. 3 DATED OCTOBER 6, 2009

(2) REVISED PER ADDENDUM No. 2 DATED SEPTEMBER 10, 2009

SUMMARY OF QUANTITIES

Q-13

STATE OF CALIFORNIA - DEPARTMENT OF TRANSPORTATION
NORTH REGION
OFFICE OF DESIGN WEST
DESIGN BRANCH S4

Caltrans

FUNCTIONAL SUPERVISOR: ERIC Y. WONG
CALCULATED-DESIGNED BY: P. FORTUNE
CHECKED BY: J. MA
REVISED BY
DATE REVISED

LAST REVISION 00-00-00 | DATE PLOTTED => 01-OCT-2009 | TIME PLOTTED => 13:38

Dist	COUNTY	ROUTE	POST MILES TOTAL PROJECT	SHEET No.	TOTAL SHEETS
03	Pla,Nev	80	56.1/66.3	924	1082

REGISTERED CIVIL ENGINEER 1-15-09 DATE

4-13-09
PLANS APPROVAL DATE

REGISTERED PROFESSIONAL ENGINEER P. FORTUNE No. 65464 Exp. 9-30-09 CIVIL STATE OF CALIFORNIA

THE STATE OF CALIFORNIA OR ITS OFFICERS OR AGENTS SHALL NOT BE RESPONSIBLE FOR THE ACCURACY OR COMPLETENESS OF SCANNED COPIES OF THIS PLAN SHEET.

(N) NON-PAY ITEM, INFORMATION ONLY

MAINLINE ROADWAY QUANTITIES

LOCATION	CONTINUOUS REINFORCE CONCRETE PAVEMENT	CONCRETE PAVEMENT	HOT MIX ASPHALT CONCRETE (TYPE A) ▽2	TAPERS AND STRUCTURAL SECTION REPLACEMENT: TAPER	TAPERS AND STRUCTURAL SECTION REPLACEMENT: HOT MIX ASPHALT (TYPE A)	TAPERS AND STRUCTURAL SECTION REPLACEMENT: ROADWAY EXCAVATION	CLASS 2 AGGREGATE SUBBASE	TACK COAT	IMPORTED BORROW ▽2 ▽3	~~(N) EMBANKMENT~~ ▽3
		CY	TON		TON	CY	CY		CY	~~CY~~
HYBRID ROCKFALL BARRIER - SEGMENT No. 1						605				
HYBRID ROCKFALL BARRIER - SEGMENT No. 2						695				
TOTAL FROM STAGE CONSTRUCTION DETOURS QUANTITIES			3091			1405			13598 ~~12238~~	
TOTAL FROM STAGE CONSTRUCTION TEMPORARY HMA RAMPS QUANTITIES			8977 ~~7617.9~~							
TOTAL FROM STAGE CONSTRUCTION SHOULDER RECONSTRUCTION QUANTITIES			85042							
TOTAL FROM STAGE CONSTRUCTION TAPERS QUANTITIES			2840							
TOTAL FROM DD-8		27.9	65.3			156	24			
TOTAL FROM DD-13			1.9							
TOTAL FROM DQ-27 & DQ-28			61.5						350	
TOTAL FROM TEMPORARY CISCO GROVE EB OFFRAMP			301.0						62	
TOTAL FROM RAMP & CROSSROAD QUANTITIES		3753	13405			1948		9.1	1170	
TOTAL FROM MAINLINE PROFILE TAPERS QUANTITIES			17967			8				
TOTAL FROM HMA DITCH, GUTTER AND SHOULDER QUANTITIES			4762							
TOTAL FROM MAINTENANCE PULLOUT QUANTITIES		367	1064							
TOTAL FROM MBGR QUANTITIES			460							
TOTAL FROM GUTTER TRANSITIONS QUANTITIES			107							
TOTAL FROM GUTTER FLARE QUANTITIES			401							
TOTAL FROM HMA DIKE (TYPE E) QUANTITIES (GUTTER FLARE TABLE)			1131							
TOTAL FROM SHOULDER BACKING QUANTITIES						2419				
TOTAL	32013	172017	~~270355~~ 279678			~~77033~~ 79453 ▽3	599	55	~~43027~~ 54154	

▽3 REVISED PER ADDENDUM No. 3 DATED OCTOBER 6, 2009

▽2 REVISED PER ADDENDUM No. 2 DATED SEPTEMBER 10, 2009

SUMMARY OF QUANTITIES

Q-14

STATE OF CALIFORNIA - DEPARTMENT OF TRANSPORTATION
Caltrans
NORTH REGION
OFFICE OF DESIGN WEST
DESIGN BRANCH S4

FUNCTIONAL SUPERVISOR: ERIC Y. WONG
CALCULATED-DESIGNED BY: P. FORTUNE
CHECKED BY: J. MA
REVISED BY
DATE REVISED

LAST REVISION 00-00-00
DATE PLOTTED => 01-OCT-2009
TIME PLOTTED => 13:39

Dist	COUNTY	ROUTE	POST MILES TOTAL PROJECT	SHEET No.	TOTAL SHEETS
03	Pla,Nev	80	56.1/66.3	930	1082

REGISTERED CIVIL ENGINEER 1-15-09 DATE

4-13-09
PLANS APPROVAL DATE

REGISTERED PROFESSIONAL ENGINEER P. FORTUNE No. 65464 Exp. 9-30-09 CIVIL STATE OF CALIFORNIA

THE STATE OF CALIFORNIA OR ITS OFFICERS OR AGENTS SHALL NOT BE RESPONSIBLE FOR THE ACCURACY OR COMPLETENESS OF SCANNED COPIES OF THIS PLAN SHEET.

3

IMPORTED MATERIAL (SHOULDER BACKING) WESTBOUND

STAGE	ALIGNMENT	STATION FROM	STATION TO	SIDE R+/L+	SHOULDER BACKING CY	ROADWAY EXCAVATION CY
3	"WB1"	333+46	338+90	L+	89	
	"WB1"	401+04	406+20	L+	104	
	"WB1"	423+90	431+66	L+	128	
	"WB1"	446+00	448+25	L+	45	
	"WB1"	459+16	468+43	L+	118	
	"S1"	468+43	478+08	L+	82	82
	"S3"	486+50	489+64	L+	27	27
	"WB1"	492+64	503+00	L+	132	
	"WB1"	507+22	509+46	L+	29	29
	"WB1"	548+00	553+25	L+	93	
	"WB1"	571+35	583+00	L+	149	
	"WB1"	587+00	590+72	L+	75	25
	"WB1"	618+80	620+50	L+	22	22
	"WB1"	635+57	637+16	L+	28	
	"WB1"	638+16	641+49	L+	59	
	"U4"	653+69	659+45	L+	49	49
	"WB1"	656+60	659+45	L+	69	
	"WB1"	659+45	669+67	L+	206	
	"WB1"	671+04	679+58	L+	109	
	"WB1"	704+72	716+29	L+	205	
7	"V2"	716+29	724+80	L+	114	43
6	"V4"	724+53	733+80	L+	124	34
	"WB1"	733+80	743+54	L+	172	
	"WB1"	801+23	802+86	L+	21	21
	"WB1"	809+54	831+00	L+	432	
	"WB1"	869+07	873+31	L+	75	
	"Z2"	869+94	875+00	L+	68	
			WB SUBTOTAL 1		4868	782

IMPORTED MATERIAL (SHOULDER BACKING) WESTBOUND

STAGE	ALIGNMENT	STATION FROM	STATION TO	SIDE R+/L+	SHOULDER BACKING CY	ROADWAY EXCAVATION CY
3	"R3"	338+28	338+90	R+	5	5
	"WB1"	340+50	356+80	R+	268	
	"WB1"	371+35	399+08	R+	524	
	"WB1"	432+75	445+52	R+	163	
	"WB1"	463+50	488+38	R+	399	178
	"WB1"	494+45	509+46	R+	302	
	"WB1"	518+66	526+50	R+	100	100
	"T2"	515+67	520+50	R+	41	41
	"WB1"	533+76	543+64	R+	126	126
	"WB1"	551+76	557+50	R+	116	
	"WB1"	571+40	572+65	R+	25	
	"WB1"	582+92	591+50	R+	110	
	"WB1"	595+50	605+09	R+	123	123
	"WB1"	612+50	621+76	R+	118	118
	"WB1"	632+03	636+39	R+	88	
	"WB1"	645+03	649+41	R+	88	
	"U2"	648+74	649+80	R+	9	9
	"U4"	657+35	659+48	R+	18	18
	"WB1"	664+35	667+13	R+	56	
7	"WB1"	688+07	751+38	R+	1119	256
6	"V2"	720+56	722+55	R+	17	
	"V4"	727+90	729+88	R+	17	
	"WB1"	768+55	777+68	R+	184	
	"WB1"	789+03	799+04	R+	128	
	"WB1"	819+04	828+89	R+	492	
	"WB1"	844+00	848+27	R+	75	
	"WB1"	854+75	873+31	R+	374	
	"Z2"	869+22	872+24	R+	40	
			WB SUBTOTAL 2		3081	524

IMPORTED MATERIAL (SHOULDER BACKING) EASTBOUND

STAGE	ALIGNMENT	STATION FROM	STATION TO	SIDE R+/L+	SHOULDER BACKING CY	ROADWAY EXCAVATION CY
2	"EB1"	332+75	353+50	L+	418	
	"R2"	338+67	339+79	L+	10	10
	"R6"	368+41	370+00	L+	14	14
	"R6"	373+40	377+76	L+	37	37
	"EB1"	369+00	384+00	L+	192	
	"EB1"	400+35	413+60	L+	169	
	"EB1"	416+00	439+10	L+	295	
	"EB1"	500+48	509+08	L+	110	110
	"EB1"	525+48	534+61	L+	117	
	"T3"	531+52	533+78	L+	30	15
	"T4"	537+32	538+76	L+	19	10
	"EB1"	539+25	541+74	L+	32	
	"EB1"	543+00	544+25	L+	16	
	"EB1"	549+25	554+00	L+	81	
	"EB1"	558+35	562+46	L+	53	
	"EB1"	565+55	571+27	L+	73	
	"EB1"	590+30	601+00	L+	215	
	"EB1"	606+30	610+65	L+	56	
	"EB1"	629+10	637+15	L+	103	
	"U1"	639+77	641+78	L+	27	13
7	"U3"	651+53	652+50	L+	8	4
	"EB1"	652+42	659+53	L+	143	
	"EB1"	667+75	671+90	L+	68	
	"EB1"	678+35	709+50	L+	551	
5	"EB1"	709+50	748+60	L+	691	
	"V1"	710+28	711+20	L+	12	6
	"V3"	721+34	723+69	L+	32	16
	"EB1"	789+21	790+38	L+	19	
	"EB1"	795+18	798+75	L+	59	
	"EB1"	800+78	824+43	L+	302	51
	"EB1"	836+58	862+85	L+	464	
	"Z1"	859+34	862+09	L+	37	18
2	"EB1"	332+75	339+80	R+	90	45
	"R2"/"EB1"	335+20	350+40	R+	269	
	"EB1"	353+30	365+25	R+	211	
	"R6"	365+25	377+76	R+	153	76
	"EB1"	369+00	370+02	R+	13	
	"EB1"	381+50	397+38	R+	261	
			EB SUBTOTAL 1		5,450	425

IMPORTED MATERIAL (SHOULDER BACKING) EASTBOUND

STAGE	ALIGNMENT	STATION FROM	STATION TO	SIDE R+/L+	SHOULDER BACKING CY	ROADWAY EXCAVATION CY
2	"EB1"	420+50	470+34	R+	637	
	"S2"	470+34	478+12	R+	66	66
	"S4"	478+20	488+34	R+	86	86
	"EB1"	470+34	477+63	R+	93	93
	"EB1"	478+26	485+48	R+	92	92
	"EB1"	497+00	501+80	R+	61	61
	"EB1"	531+60	538+25	R+	98	
	"EB1"	550+00	559+00	R+	181	
	"EB1"	563+50	566+00	R+	50	
	"EB1"	580+50	582+88	R+	48	
	"EB1"	590+00	590+53	R+	9	
	"EB1"	600+50	605+65	R+	104	
	"EB1"	628+70	640+15	R+	230	
	"EB1"	639+77	643+55	R+	67	
7	"U3"	647+66	652+50	R+	65	32
	"EB1"	651+20	652+50	R+	21	11
	"EB1"	652+50	661+95	R+	155	
	"EB1"	687+72	692+50	R+	79	
	"EB1"	698+32	710+30	R+	212	
5	"V1"	710+30	718+07	R+	95	47
	"EB1"	710+60	717+00	R+	82	
	"EB1"	718+35	723+68	R+	68	34
	"EB1"	733+19	740+03	R+	138	
	"EB1"	745+15	751+88	R+	111	
	"EB1"	757+00	760+48	R+	57	
	"EB1"	762+85	767+00	R+	68	
	"X1"	781+55	783+95	R+	20	20
	"EB1"	780+98	787+13	R+	79	39
	"EB1"	790+75	793+50	R+	42	
	"EB1"	814+55	820+05	R+	70	
	"EB1"	821+05	824+40	R+	43	
	"EB1"	838+20	841+50	R+	42	
	"EB1"	843+00	852+94	R+	200	
	"EB1"	859+34	866+35	R+	124	62
	"Z1"	861+26	866+50	R+	45	45
			EB SUBTOTAL 2		3,638	688
			EB SUBTOTAL 1		5,450	425
			WB SUBTOTAL 1		4,868	782
			WB SUBTOTAL 2		3,081	524
			SUBTOTAL			2,419
			TOTAL		17,037	

3 REVISED PER ADDENDUM No. 3 DATED OCTOBER 6, 2009

SUMMARY OF QUANTITIES

Q-20

STATE OF CALIFORNIA - DEPARTMENT OF TRANSPORTATION
Caltrans
NORTH REGION
OFFICE OF DESIGN WEST
DESIGN BRANCH S4

FUNCTIONAL SUPERVISOR: ERIC Y. WONG
CALCULATED-DESIGNED BY: J. MA — P. FORTUNE
CHECKED BY
REVISED BY
DATE REVISED

LAST REVISION 00-00-00 | DATE PLOTTED => 01-OCT-2009 | TIME PLOTTED => 13:39