INDEX OF PLANS

SHEET No.	DESCRIPTION
1	TITLE AND LOCATION MAP
2-17	LOCATIONS OF CONSTRUCTION
18-126	CONSTRUCTION DETAILS
127	CONSTRUCTION AREA SIGNS
128	STAGE CONSTRUCTION PLAN
129-152	SUMMARY OF QUANTITIES
153-195	REVISED STANDARD PLANS

THE STANDARD PLANS LIST APPLICABLE TO THIS CONTRACT IS INCLUDED IN THE NOTICE TO BIDDERS AND SPECIAL PROVISIONS BOOK.

STATE OF CALIFORNIA

DEPARTMENT OF TRANSPORTATION

ACHSSTP-000C(373)

Dist	COUNTY	ROUTE	POST MILES TOTAL PROJECT	SHEET No.	TOTAL SHEETS
03	But,Col,Gln Sut,Yol,Yub	16,32,45 70,113,162	Var	1	195

PROJECT PLANS FOR CONSTRUCTION ON STATE HIGHWAY

IN BUTTE, COLUSA, GLENN, SUTTER, YOLO, AND YUBA COUNTIES AT VARIOUS LOCATIONS

TO BE SUPPLEMENTED BY STANDARD PLANS DATED 2010

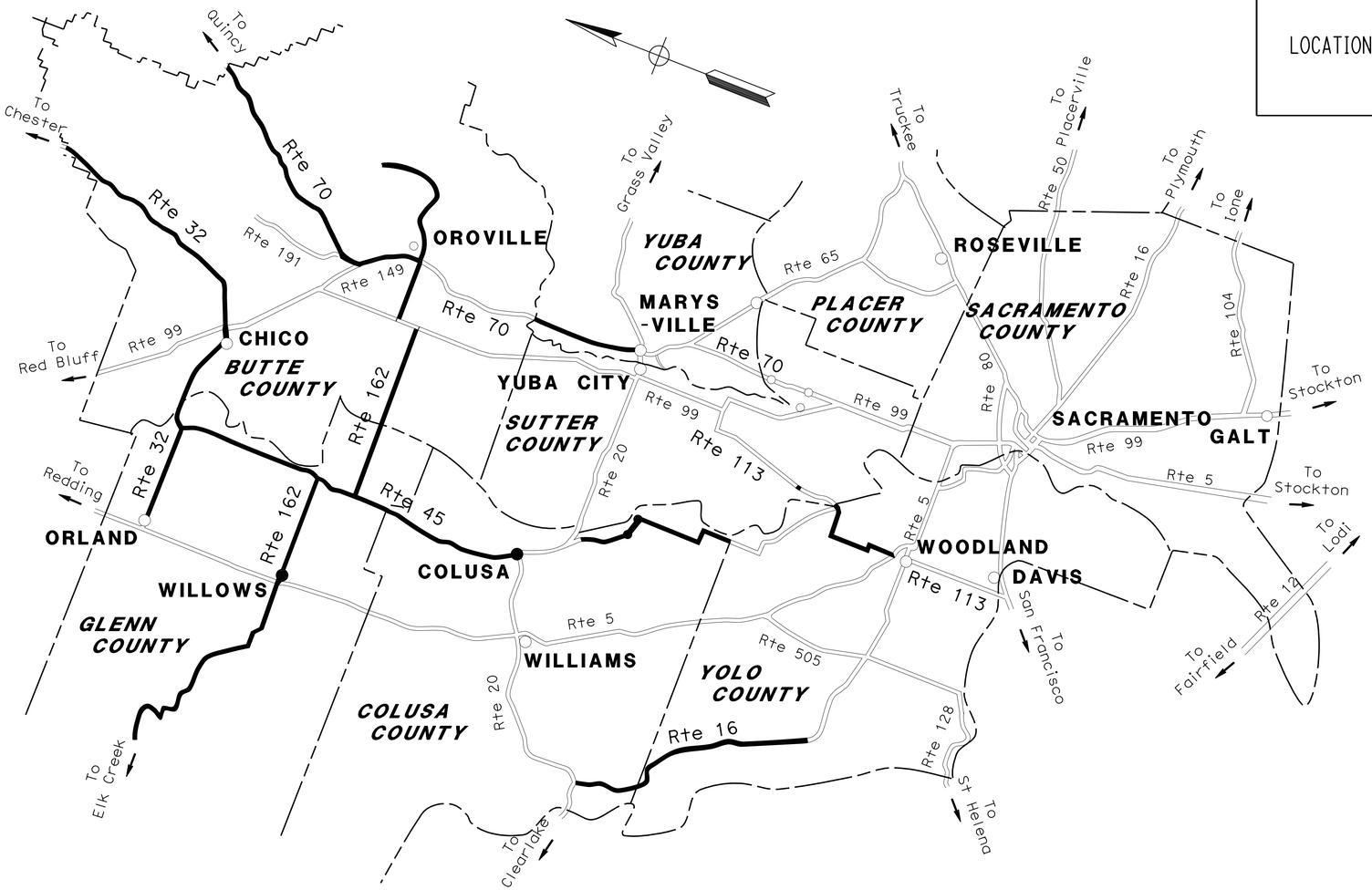

NO SCALE

THE CONTRACTOR SHALL POSSESS THE CLASS (OR CLASSES) OF LICENSE AS SPECIFIED IN THE "NOTICE TO BIDDERS."

2-10-14
PROJECT ENGINEER DATE
REGISTERED CIVIL ENGINEER

ERIC NORMAN SOUZA
No. 75706
Exp. 6-30-14
CIVIL
REGISTERED PROFESSIONAL ENGINEER
STATE OF CALIFORNIA

February 10, 2014
PLANS APPROVAL DATE

THE STATE OF CALIFORNIA OR ITS OFFICERS OR AGENTS SHALL NOT BE RESPONSIBLE FOR THE ACCURACY OR COMPLETENESS OF SCANNED COPIES OF THIS PLAN SHEET.

PROJECT MANAGER: JOHN HOLDER
DESIGN ENGINEER: STEPHEN WRIGHT

CONTRACT No.	03-2F0004
PROJECT ID	0300020450

LAST REVISION 00-00-00
DATE PLOTTED => 29-MAY-2014
TIME PLOTTED => 12:47

Dist	COUNTY	ROUTE	POST MILES TOTAL PROJECT	SHEET No.	TOTAL SHEETS
03	But,Col,Gln Sut,Yol,Yub	16,32,45 70,113,162	Var	2	195

2-10-14
REGISTERED CIVIL ENGINEER DATE

2-10-14
PLANS APPROVAL DATE

ERIC NORMAN SOUZA
No. 75706
Exp. 06-30-14
CIVIL
REGISTERED PROFESSIONAL ENGINEER
STATE OF CALIFORNIA

THE STATE OF CALIFORNIA OR ITS OFFICERS OR AGENTS SHALL NOT BE RESPONSIBLE FOR THE ACCURACY OR COMPLETENESS OF SCANNED COPIES OF THIS PLAN SHEET.

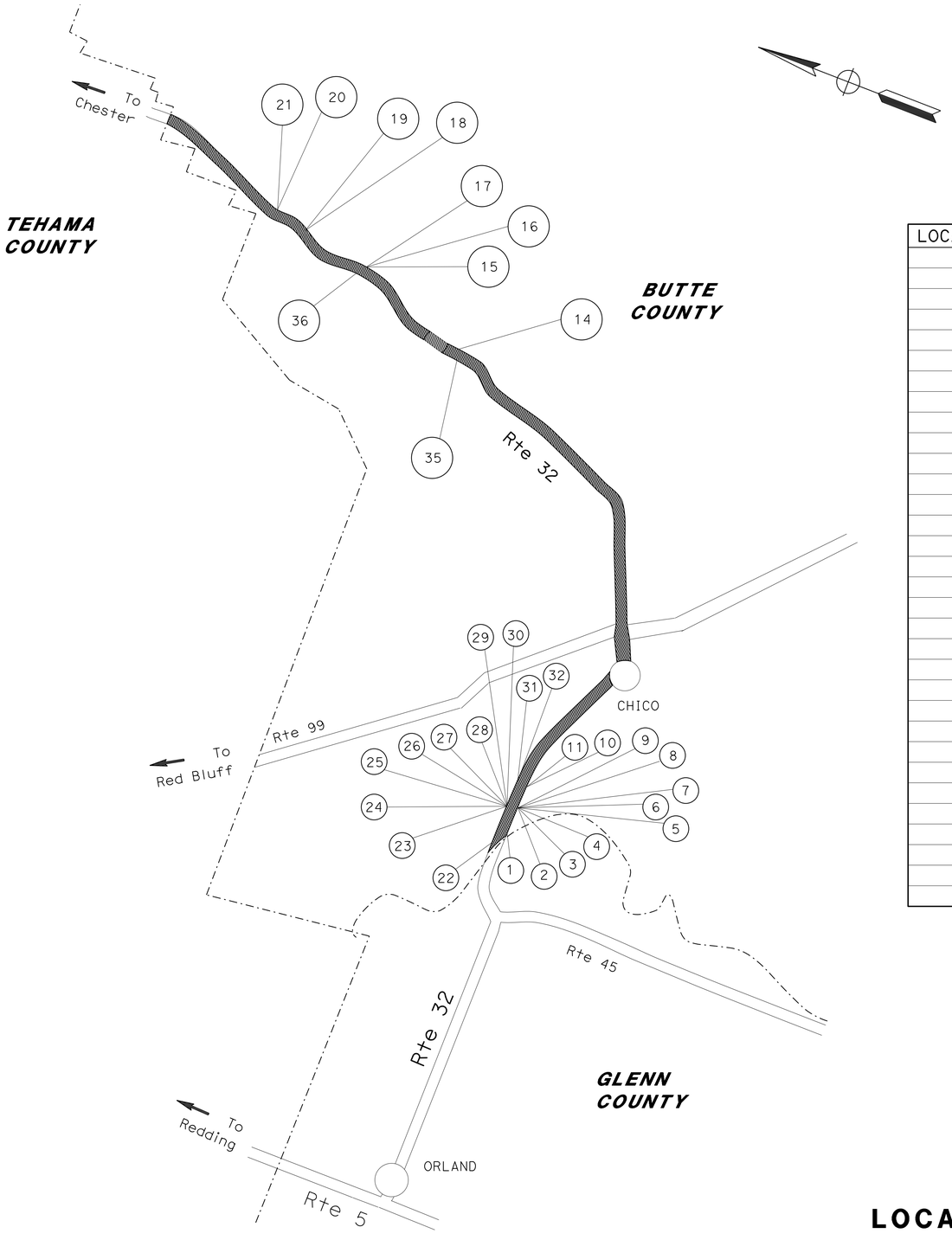

LOCATION	COUNTY	ROUTE	PM			DIRECTION
1	But	32	0.08	TO	0.21	EB
2	But	32	1.93	TO	1.94	EB
3	But	32	1.98	TO	1.99	EB
4	But	32	2.07	TO	2.08	EB
5	But	32	2.12	TO	2.13	EB
6	But	32	2.32	TO	2.33	EB
7	But	32	2.34	TO	2.35	EB
8	But	32	2.38	TO	2.39	EB
9	But	32	2.40	TO	2.41	EB
10	But	32	3.73	TO	3.74	EB
11	But	32	3.75	TO	3.76	EB
14	But	32	R23.59	TO	R23.71	EB
15	But	32	30.87	TO	30.90	EB
16	But	32	30.93	TO	31.06	EB
17	But	32	31.15	TO	31.20	EB
18	But	32	R33.70	TO	R33.73	EB
19	But	32	R33.89	TO	R34.13	EB
20	But	32	R36.44	TO	R36.50	EB
21	But	32	R36.75	TO	R36.80	EB
22	But	32	0.09	TO	0.26	WB
23	But	32	1.92	TO	1.93	WB
24	But	32	1.98	TO	1.99	WB
25	But	32	2.07	TO	2.08	WB
26	But	32	2.11	TO	2.12	WB
27	But	32	2.32	TO	2.33	WB
28	But	32	2.34	TO	2.35	WB
29	But	32	2.37	TO	2.38	WB
30	But	32	2.38	TO	2.40	WB
31	But	32	3.73	TO	3.74	WB
32	But	32	3.75	TO	3.76	WB
35	But	32	R23.60	TO	R23.66	WB
36	But	32	30.25	TO	30.36	WB

LOCATIONS OF CONSTRUCTION

NO SCALE

LC-1

STATE OF CALIFORNIA - DEPARTMENT OF TRANSPORTATION
Caltrans
TRAFFIC
FUNCTIONAL SUPERVISOR: STEPHEN WRIGHT
CALCULATED-DESIGNED BY: BAO VANG
CHECKED BY: NHAN VU
REVISED BY
DATE REVISED

LAST REVISION 00-00-00
DATE PLOTTED => 29-MAY-2014
TIME PLOTTED => 08:41

BORDER LAST REVISED 7/2/2010
USERNAME => s130875
DGN FILE => 0300020450ba001.dgn
RELATIVE BORDER SCALE IS IN INCHES 0 1 2 3
UNIT 0399
PROJECT NUMBER & PHASE 03000204501

Dist	COUNTY	ROUTE	POST MILES TOTAL PROJECT	SHEET No.	TOTAL SHEETS
03	But,Col,Gln Sut,Yol,Yub	16,32,45 70,113,162	Var	3	195

2-10-14
REGISTERED CIVIL ENGINEER DATE

ERIC NORMAN SOUZA
No. 75706
Exp.06-30-14
CIVIL
REGISTERED PROFESSIONAL ENGINEER
STATE OF CALIFORNIA

2-10-14
PLANS APPROVAL DATE

THE STATE OF CALIFORNIA OR ITS OFFICERS OR AGENTS SHALL NOT BE RESPONSIBLE FOR THE ACCURACY OR COMPLETENESS OF SCANNED COPIES OF THIS PLAN SHEET.

LOCATION	COUNTY	ROUTE	PM			DIRECTION
37	But	70	14.81	TO	14.83	EB
38	But	70	18.39	TO	18.41	EB
39	But	70	18.48	TO	18.49	EB
40	But	70	18.63	TO	18.65	EB
41	But	70	19.27	TO	19.29	EB
42	But	70	19.60	TO	19.61	EB
43	But	70	19.78	TO	19.80	EB
44	But	70	22.28	TO	22.45	EB
45	But	70	23.08	TO	23.20	EB
46	But	70	23.76	TO	23.80	EB
47	But	70	24.46	TO	24.65	EB
48	But	70	24.74	TO	24.78	EB
49	But	70	24.85	TO	24.92	EB
50	But	70	25.07	TO	25.19	EB
51	But	70	25.22	TO	25.36	EB
52	But	70	25.48	TO	25.52	EB
53	But	70	25.60	TO	25.68	EB
54	But	70	25.77	TO	25.87	EB
55	But	70	25.98	TO	26.07	EB
56	But	70	26.19	TO	26.26	EB
57	But	70	26.31	TO	26.69	EB
59	But	70	30.55	TO	30.63	EB
60	But	70	30.92	TO	30.94	EB
61	But	70	30.98	TO	31.20	EB
62	But	70	31.69	TO	31.75	EB
63	But	70	34.02	TO	34.21	EB
64	But	70	34.34	TO	34.56	EB
65	But	70	35.97	TO	36.03	EB
66	But	70	37.68	TO	37.82	EB
67	But	70	37.85	TO	38.03	EB
68	But	70	38.06	TO	38.29	EB
69	But	70	38.81	TO	38.92	EB
70	But	70	39.16	TO	39.21	EB
71	But	70	39.33	TO	39.48	EB
72	But	70	39.50	TO	39.53	EB
73	But	70	39.55	TO	39.56	EB
74	But	70	39.62	TO	39.63	EB
75	But	70	39.64	TO	39.65	EB
78	But	70	39.94	TO	39.95	EB
79	But	70	39.99	TO	40.05	EB
80	But	70	40.22	TO	40.29	EB
81	But	70	40.45	TO	40.47	EB
82	But	70	40.48	TO	40.50	EB
83	But	70	40.52	TO	40.53	EB
84	But	70	40.54	TO	40.62	EB
85	But	70	40.65	TO	40.68	EB
86	But	70	40.73	TO	40.75	EB
87	But	70	40.76	TO	40.79	EB
88	But	70	40.84	TO	40.85	EB
89	But	70	44.42	TO	44.44	EB
90	But	70	44.45	TO	44.50	EB
91	But	70	46.85	TO	46.87	EB
92	But	70	47.13	TO	47.15	EB
93	But	70	14.92	TO	14.94	WB

LOCATION	COUNTY	ROUTE	PM			DIRECTION
94	But	70	18.40	TO	18.42	WB
95	But	70	18.51	TO	18.52	WB
96	But	70	18.64	TO	18.66	WB
97	But	70	19.28	TO	19.30	WB
98	But	70	19.60	TO	19.62	WB
99	But	70	22.28	TO	22.46	WB
100	But	70	23.09	TO	23.22	WB
101	But	70	23.76	TO	23.80	WB
102	But	70	24.47	TO	24.69	WB
103	But	70	24.74	TO	24.94	WB
104	But	70	25.05	TO	25.18	WB
105	But	70	25.21	TO	25.37	WB
106	But	70	25.49	TO	25.56	WB
107	But	70	25.60	TO	25.69	WB
108	But	70	25.77	TO	26.07	WB
109	But	70	26.11	TO	26.15	WB
110	But	70	26.19	TO	26.27	WB
111	But	70	26.32	TO	26.46	WB
112	But	70	26.47	TO	26.70	WB
115	But	70	29.34	TO	29.46	WB
116	But	70	29.94	TO	30.02	WB
117	But	70	30.09	TO	30.28	WB
118	But	70	30.37	TO	30.42	WB
119	But	70	30.77	TO	30.83	WB
120	But	70	31.36	TO	31.57	WB
121	But	70	31.62	TO	31.66	WB
122	But	70	31.65	TO	32.00	WB
123	But	70	32.16	TO	32.29	WB
124	But	70	32.67	TO	32.74	WB
125	But	70	32.95	TO	33.07	WB
126	But	70	34.38	TO	34.54	WB
127	But	70	41.90	TO	41.95	WB
128	But	70	42.41	TO	42.56	WB
129	But	70	42.57	TO	42.59	WB
130	But	70	42.63	TO	42.71	WB
131	But	70	42.72	TO	42.74	WB
132	But	70	42.76	TO	42.80	WB
133	But	70	43.05	TO	43.07	WB
134	But	70	43.38	TO	43.39	WB
135	But	70	43.40	TO	43.43	WB
136	But	70	43.48	TO	43.53	WB
137	But	70	43.57	TO	43.59	WB
138	But	70	43.61	TO	43.62	WB
139	But	70	43.71	TO	43.73	WB
140	But	70	43.81	TO	43.86	WB
141	But	70	43.99	TO	44.00	WB
142	But	70	44.07	TO	44.08	WB
143	But	70	44.36	TO	44.43	WB
144	But	70	44.44	TO	44.51	WB
145	But	70	46.90	TO	47.06	WB
146	But	70	47.13	TO	47.15	WB
147	But	70	47.19	TO	47.20	WB
147A	But	70	47.62	TO	47.68	WB
148	But	70	47.73	TO	48.01	WB

NOTE: SEE SHEETS LC-3 & LC-4 FOR MAP OF LOCATIONS OF CONSTRUCTION

LOCATIONS OF CONSTRUCTION

LC-2

REVISED BY	DATE REVISED

CALCULATED-DESIGNED BY: BAO VANG
CHECKED BY: ERIC SOUZA
FUNCTIONAL SUPERVISOR: STEPHEN WRIGHT

STATE OF CALIFORNIA - DEPARTMENT OF TRANSPORTATION
Caltrans®
TRAFFIC

LAST REVISION 00-00-00 DATE PLOTTED => 29-MAY-2014 TIME PLOTTED => 08:41

Dist	COUNTY	ROUTE	POST MILES TOTAL PROJECT	SHEET No.	TOTAL SHEETS
03	But,Col,Gln Sut,Yol,Yub	16,32,45 70,113,162	Var	4	195

2-10-14
REGISTERED CIVIL ENGINEER DATE

ERIC NORMAN SOUZA
No. 75706
Exp. 06-30-14
CIVIL
STATE OF CALIFORNIA

2-10-14
PLANS APPROVAL DATE

THE STATE OF CALIFORNIA OR ITS OFFICERS OR AGENTS SHALL NOT BE RESPONSIBLE FOR THE ACCURACY OR COMPLETENESS OF SCANNED COPIES OF THIS PLAN SHEET.

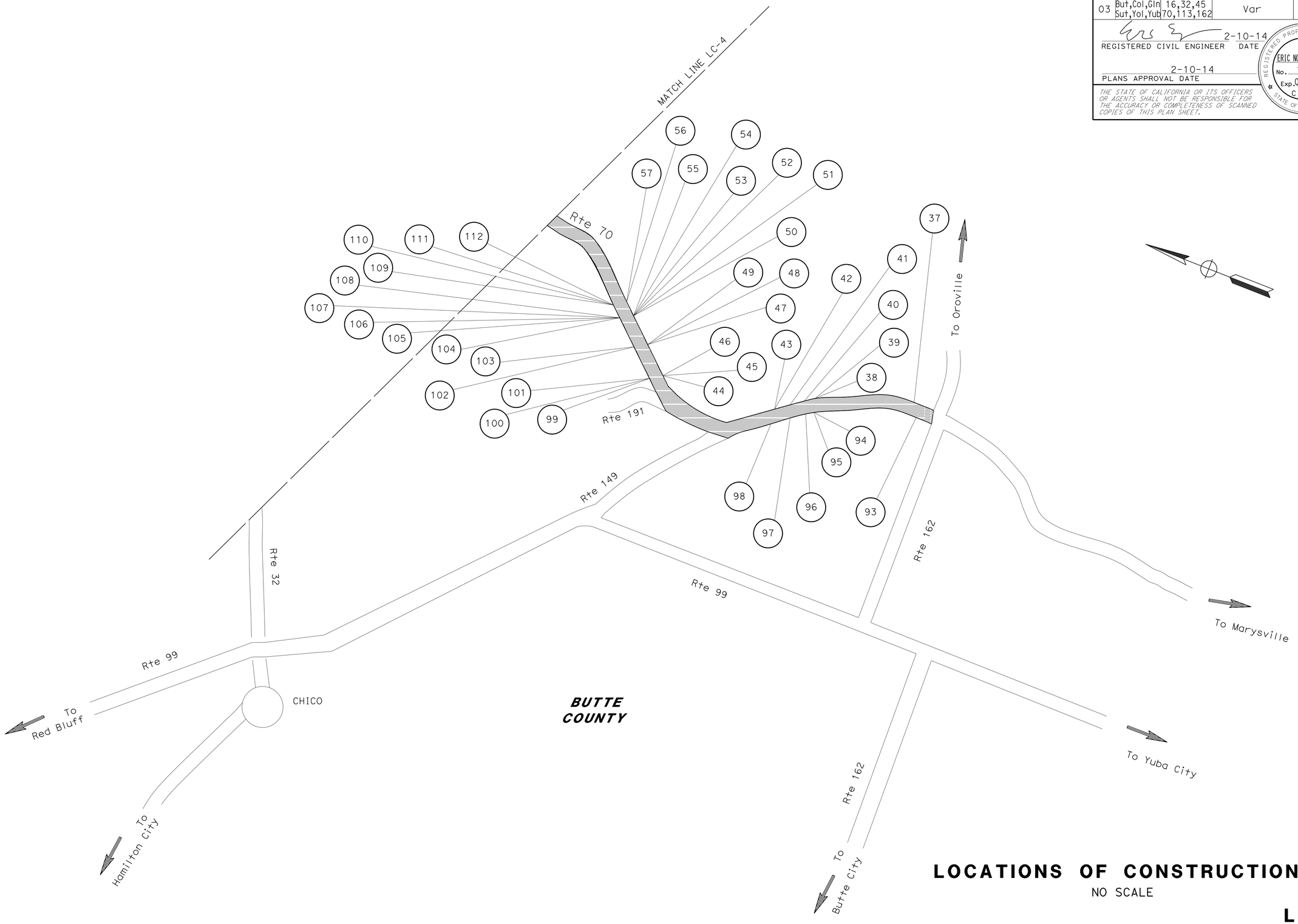

LOCATIONS OF CONSTRUCTION

NO SCALE

LC-3

STATE OF CALIFORNIA - DEPARTMENT OF TRANSPORTATION	FUNCTIONAL SUPERVISOR	REVISED BY	
Caltrans® TRAFFIC	STEPHEN WRIGHT	DATE REVISED	
CALCULATED-DESIGNED BY	BAO VANG		
CHECKED BY	ERIC SOUZA		

LAST REVISION 00-00-00 DATE PLOTTED => 29-MAY-2014 TIME PLOTTED => 08:42

BORDER LAST REVISED 7/2/2010 | USERNAME => s130875 DGN FILE => 0300020450ba003.dgn | RELATIVE BORDER SCALE IS IN INCHES 0 1 2 3 | UNIT 0399 | PROJECT NUMBER & PHASE 03000204501

Dist	COUNTY	ROUTE	POST MILES TOTAL PROJECT	SHEET No.	TOTAL SHEETS
03	But,Col,Gln Sut,Yol,Yub	16,32,45 70,113,162	Var	5	195

2-10-14
REGISTERED CIVIL ENGINEER DATE

2-10-14
PLANS APPROVAL DATE

REGISTERED PROFESSIONAL ENGINEER
ERIC NORMAN SOUZA
No. 75706
Exp. 06-30-14
CIVIL
STATE OF CALIFORNIA

THE STATE OF CALIFORNIA OR ITS OFFICERS OR AGENTS SHALL NOT BE RESPONSIBLE FOR THE ACCURACY OR COMPLETENESS OF SCANNED COPIES OF THIS PLAIN SHEET.

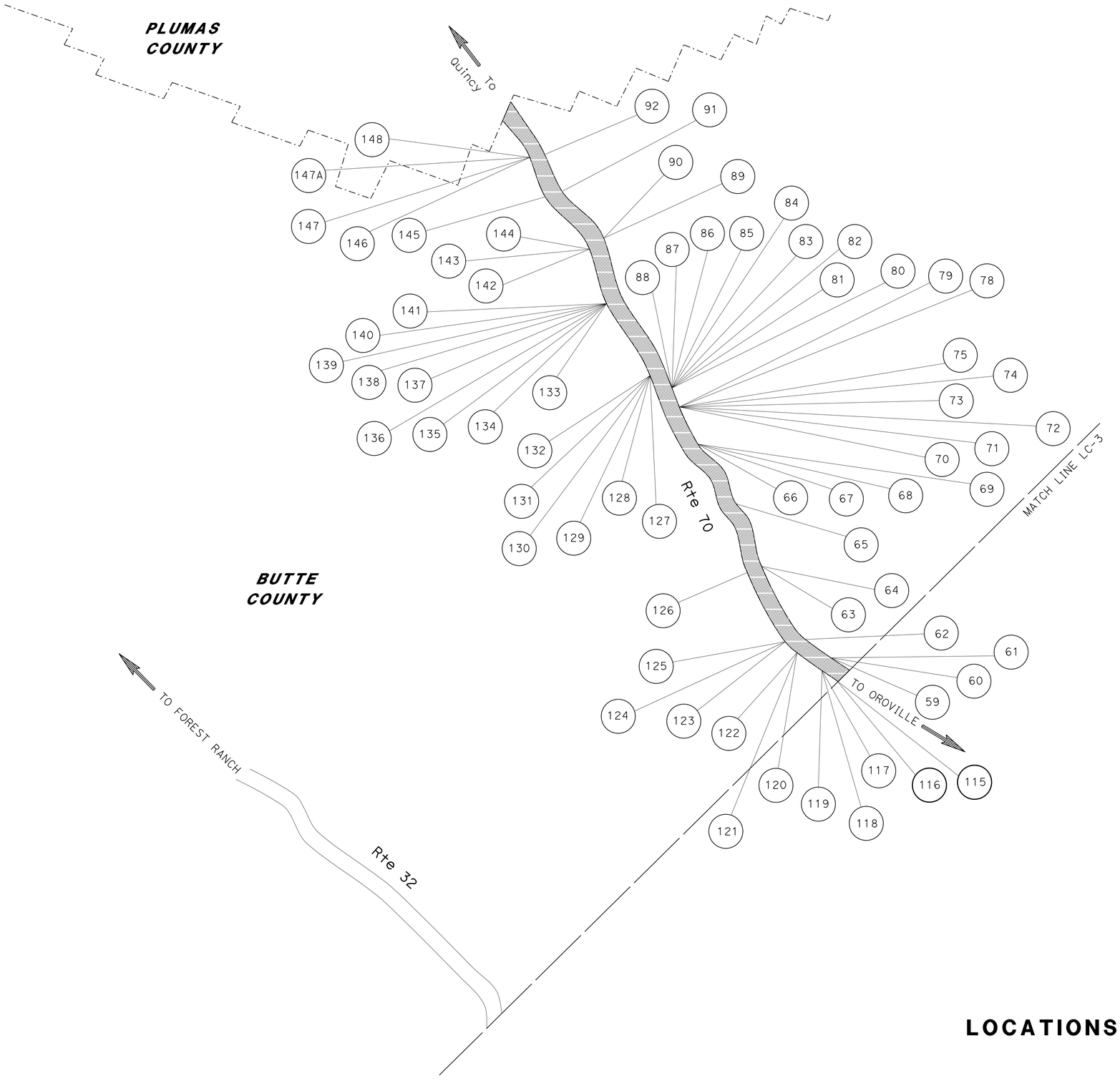

LOCATIONS OF CONSTRUCTION

NO SCALE

LC-4

REVISED BY			
DATE REVISED			
BAO VANG	CALCULATED-DESIGNED BY		
ERIC SOUZA	CHECKED BY		
STEPHEN WRIGHT	FUNCTIONAL SUPERVISOR		

STATE OF CALIFORNIA - DEPARTMENT OF TRANSPORTATION
Caltrans®
TRAFFIC

LAST REVISION 00-00-00
DATE PLOTTED => 29-MAY-2014
TIME PLOTTED => 08:42

BORDER LAST REVISED 7/2/2010

USERNAME => s130875
DGN FILE => 0300020450ba004.dgn

RELATIVE BORDER SCALE IS IN INCHES 0 1 2 3

UNIT 0399

PROJECT NUMBER & PHASE 03000204501

Dist	COUNTY	ROUTE	POST MILES TOTAL PROJECT	SHEET No.	TOTAL SHEETS
03	But,Col,Gln Sut,Yol,Yub	16,32,45 70,113,162	Var	6	195

2-10-14
REGISTERED CIVIL ENGINEER DATE

ERIC NORMAN SOUZA
No. 75706
Exp. 06-30-14
CIVIL
REGISTERED PROFESSIONAL ENGINEER
STATE OF CALIFORNIA

2-10-14
PLANS APPROVAL DATE

THE STATE OF CALIFORNIA OR ITS OFFICERS OR AGENTS SHALL NOT BE RESPONSIBLE FOR THE ACCURACY OR COMPLETENESS OF SCANNED COPIES OF THIS PLAN SHEET.

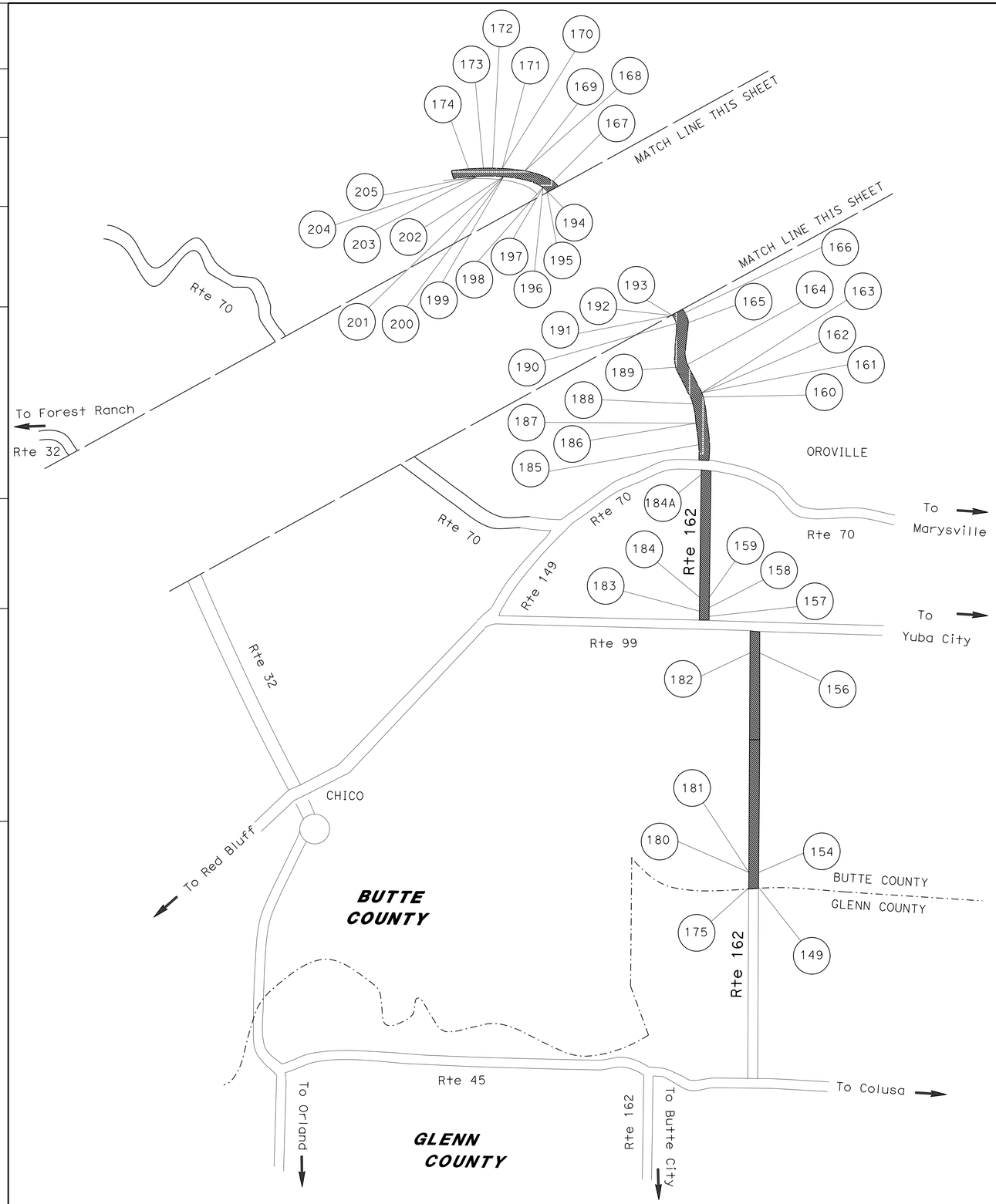

LOCATION	COUNTY	ROUTE	PM	DIRECTION
149	But	162	0.03 TO 0.04	EB
154	But	162	1.32 TO 1.33	EB
156	But	162	8.10 TO 8.11	EB
157	But	162	R9.78 TO R9.90	EB
158	But	162	R10.09 TO R10.11	EB
159	But	162	R10.25 TO R10.27	EB
160	But	162	20.23 TO 20.31	EB
161	But	162	21.78 TO 21.81	EB
162	But	162	21.82 TO 21.85	EB
163	But	162	21.92 TO 22.10	EB
164	But	162	23.15 TO 23.16	EB
165	But	162	26.86 TO 26.88	EB
166	But	162	27.21 TO 27.22	EB
167	But	162	28.25 TO 28.27	EB
168	But	162	29.25 TO 29.27	EB
169	But	162	29.94 TO 29.96	EB
170	But	162	30.12 TO 30.13	EB
171	But	162	30.23 TO 30.41	EB
172	But	162	30.48 TO 30.72	EB
173	But	162	30.74 TO 30.94	EB
174	But	162	31.00 TO 31.09	EB
175	But	162	0.03 TO 0.04	WB
180	But	162	1.31 TO 1.32	WB
181	But	162	1.33 TO 1.34	WB
182	But	162	8.11 TO 8.13	WB
183	But	162	R9.91 TO R10.11	WB
184	But	162	R10.25 TO R10.54	WB
184A	But	162	15.82 TO 15.85	WB
185	But	162	16.99 TO 17.03	WB
186	But	162	19.26 TO 19.27	WB
187	But	162	19.28 TO 19.29	WB
188	But	162	21.49 TO 21.59	WB
189	But	162	23.14 TO 23.17	WB
190	But	162	26.85 TO 26.87	WB
191	But	162	27.21 TO 27.22	WB
192	But	162	27.28 TO 27.34	WB
193	But	162	27.45 TO 27.48	WB
194	But	162	27.63 TO 27.78	WB
195	But	162	27.80 TO 27.92	WB
196	But	162	27.97 TO 28.08	WB
197	But	162	28.14 TO 28.79	WB
198	But	162	28.86 TO 29.00	WB
199	But	162	29.03 TO 29.06	WB
200	But	162	29.09 TO 29.26	WB
201	But	162	29.30 TO 29.67	WB
202	But	162	29.69 TO 29.95	WB
203	But	162	30.12 TO 30.14	WB
204	But	162	30.88 TO 30.92	WB
205	But	162	30.98 TO 31.02	WB

LOCATIONS OF CONSTRUCTION

NO SCALE

LC-5

REVISED BY	DATE REVISED

CALCULATED-DESIGNED BY: BAO VANG
CHECKED BY: ERIC SOUZA
FUNCTIONAL SUPERVISOR: STEPHEN WRIGHT

STATE OF CALIFORNIA - DEPARTMENT OF TRANSPORTATION
Caltrans®
TRAFFIC

LAST REVISION 00-00-00
DATE PLOTTED => 29-MAY-2014
TIME PLOTTED => 08:42

BORDER LAST REVISED 7/2/2010
USERNAME => s130875
DGN FILE => 0300020450ba005.dgn
RELATIVE BORDER SCALE IS IN INCHES 0 1 2 3
UNIT 0399
PROJECT NUMBER & PHASE 03000204501

Dist	COUNTY	ROUTE	POST MILES TOTAL PROJECT	SHEET No.	TOTAL SHEETS
03	But,Col,Gln Sut,Yol,Yub	16,32,45 70,113,162	Var	7	195

REGISTERED CIVIL ENGINEER — DATE 2-10-14

PLANS APPROVAL DATE 2-10-14

REGISTERED PROFESSIONAL ENGINEER — ERIC NORMAN SOUZA — No. 75706 — Exp. 06-30-14 — CIVIL — STATE OF CALIFORNIA

THE STATE OF CALIFORNIA OR ITS OFFICERS OR AGENTS SHALL NOT BE RESPONSIBLE FOR THE ACCURACY OR COMPLETENESS OF SCANNED COPIES OF THIS PLAN SHEET.

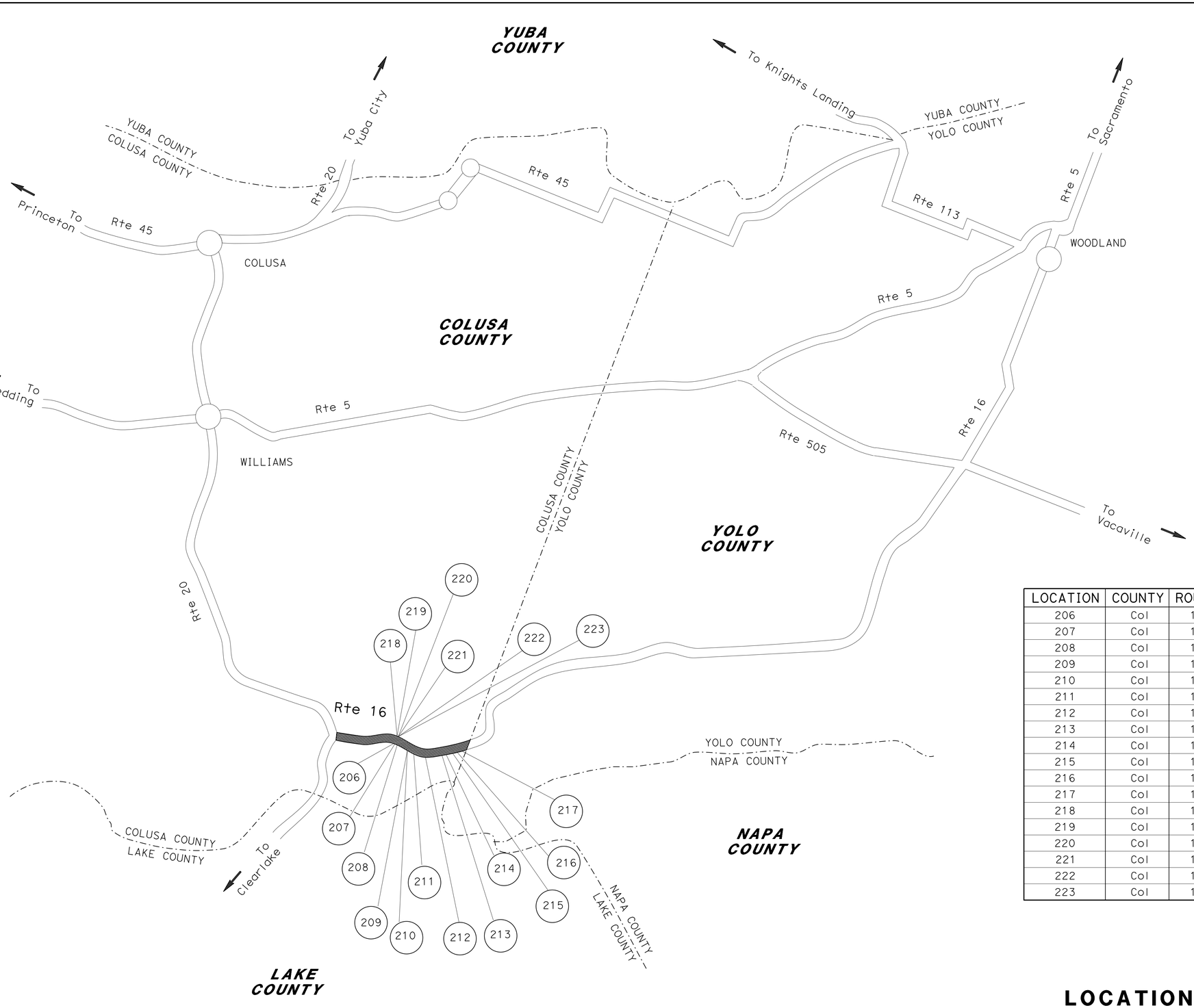

LOCATION	COUNTY	ROUTE	PM	DIRECTION
206	Col	16	3.15 TO R3.35	EB
207	Col	16	R3.36 TO R3.37	EB
208	Col	16	3.60 TO 3.67	EB
209	Col	16	R4.31 TO R4.32	EB
210	Col	16	R4.39 TO R4.40	EB
211	Col	16	4.74 TO 5.10	EB
212	Col	16	5.25 TO 5.84	EB
213	Col	16	6.06 TO 6.32	EB
214	Col	16	6.33 TO 6.37	EB
215	Col	16	6.56 TO 6.68	EB
216	Col	16	6.71 TO 6.90	EB
217	Col	16	7.18 TO 7.26	EB
218	Col	16	R3.34 TO R3.35	WB
219	Col	16	R3.36 TO R3.50	WB
220	Col	16	R3.55 TO 3.69	WB
221	Col	16	3.94 TO 4.21	WB
222	Col	16	R4.28 TO R4.32	WB
223	Col	16	R4.39 TO R4.40	WB

LOCATIONS OF CONSTRUCTION

NO SCALE

LC-6

REVISED BY	DATE REVISED

CALCULATED-DESIGNED BY: BAO VANG
CHECKED BY: ERIC SOUZA
FUNCTIONAL SUPERVISOR: STEPHEN WRIGHT
STATE OF CALIFORNIA - DEPARTMENT OF TRANSPORTATION
TRAFFIC

LAST REVISION 00-00-00
DATE PLOTTED => 29-MAY-2014
TIME PLOTTED => 08:42

BORDER LAST REVISED 7/2/2010
USERNAME => s130875
DGN FILE => 0300020450ba006.dgn
RELATIVE BORDER SCALE IS IN INCHES 0 1 2 3
UNIT 0399
PROJECT NUMBER & PHASE 03000204501

Dist	COUNTY	ROUTE	TOTAL PROJECT	SHEET No.	TOTAL SHEETS
03	But,Col,Gln Sut,Yol,Yub	16,32,45 70,113,162	Var	8	195

REGISTERED CIVIL ENGINEER — DATE 2-10-14

PLANS APPROVAL DATE 2-10-14

REGISTERED PROFESSIONAL ENGINEER — ERIC NORMAN SOUZA — No. 75706 — Exp. 06-30-14 — CIVIL — STATE OF CALIFORNIA

THE STATE OF CALIFORNIA OR ITS OFFICERS OR AGENTS SHALL NOT BE RESPONSIBLE FOR THE ACCURACY OR COMPLETENESS OF SCANNED COPIES OF THIS PLAN SHEET.

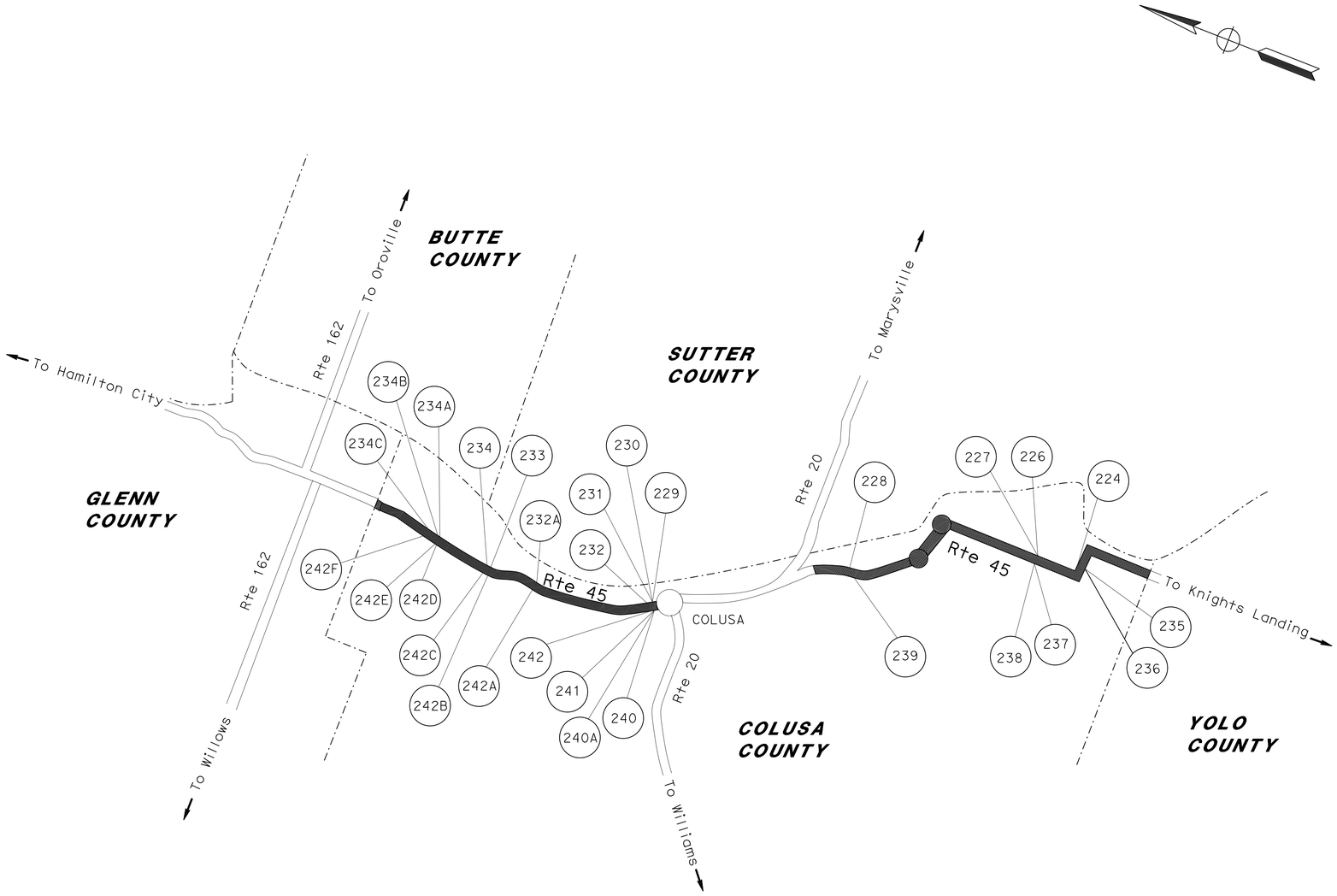

LOCATION	COUNTY	ROUTE	PM	DIRECTION
224	Col	45	4.03 TO 4.05	NB
226	Col	45	6.83 TO 6.84	NB
227	Col	45	6.86 TO 6.87	NB
228	Col	45	19.29 TO 19.32	NB
229	Col	45	20.32 TO 20.34	NB
230	Col	45	20.42 TO 20.43	NB
231	Col	45	20.59 TO 20.61	NB
232	Col	45	21.32 TO 21.33	NB
232A	Col	45	25.00 TO 25.02	NB
233	Col	45	28.23 TO 28.24	NB
234	Col	45	28.90 TO 28.91	NB
234A	Col	45	30.24 TO 30.25	NB
234B	Col	45	30.67 TO 30.70	NB
234C	Col	45	31.23 TO 31.24	NB
235	Col	45	4.03 TO 4.05	SB
236	Col	45	4.06 TO 4.08	SB
237	Col	45	6.83 TO 6.84	SB
238	Col	45	6.86 TO 6.87	SB
239	Col	45	19.31 TO 19.34	SB
240	Col	45	20.33 TO 20.35	SB
240A	Col	45	20.43 TO 20.44	SB
241	Col	45	20.60 TO 20.61	SB
242	Col	45	R21.91 TO R21.94	SB
242A	Col	45	25.00 TO 25.02	SB
242B	Col	45	28.23 TO 28.24	SB
242C	Col	45	28.90 TO 28.92	SB
242D	Col	45	30.24 TO 30.25	SB
242E	Col	45	30.67 TO 30.70	SB
242F	Col	45	31.23 TO 31.25	SB

LOCATIONS OF CONSTRUCTION

NO SCALE

LC-7

REVISED BY	DATE REVISED
BAO VANG	ERIC SOUZA
CALCULATED-DESIGNED BY	CHECKED BY
FUNCTIONAL SUPERVISOR	STEPHEN WRIGHT

STATE OF CALIFORNIA - DEPARTMENT OF TRANSPORTATION
Caltrans® TRAFFIC

LAST REVISION 00-00-00 | DATE PLOTTED => 29-MAY-2014 | TIME PLOTTED => 08:42

BORDER LAST REVISED 7/2/2010 | USERNAME => s130875 | DGN FILE => 0300020450ba007.dgn | RELATIVE BORDER SCALE IS IN INCHES 0 1 2 3 | UNIT 0399 | PROJECT NUMBER & PHASE 03000204501

Dist	COUNTY	ROUTE	POST MILES TOTAL PROJECT	SHEET No.	TOTAL SHEETS
03	But,Col,Gln Sut,Yol,Yub	16,32,45 70,113,162	Var	9	195

REGISTERED CIVIL ENGINEER — 2-10-14 DATE

ERIC NORMAN SOUZA No. 75706 Exp. 06-30-14 CIVIL — REGISTERED PROFESSIONAL ENGINEER — STATE OF CALIFORNIA

2-10-14
PLANS APPROVAL DATE

THE STATE OF CALIFORNIA OR ITS OFFICERS OR AGENTS SHALL NOT BE RESPONSIBLE FOR THE ACCURACY OR COMPLETENESS OF SCANNED COPIES OF THIS PLAN SHEET.

LOCATION	COUNTY	ROUTE	PM	DIRECTION
242G	Yub	70	25.75 TO 25.78	EB
242H	Yub	70	25.75 TO 25.79	WB

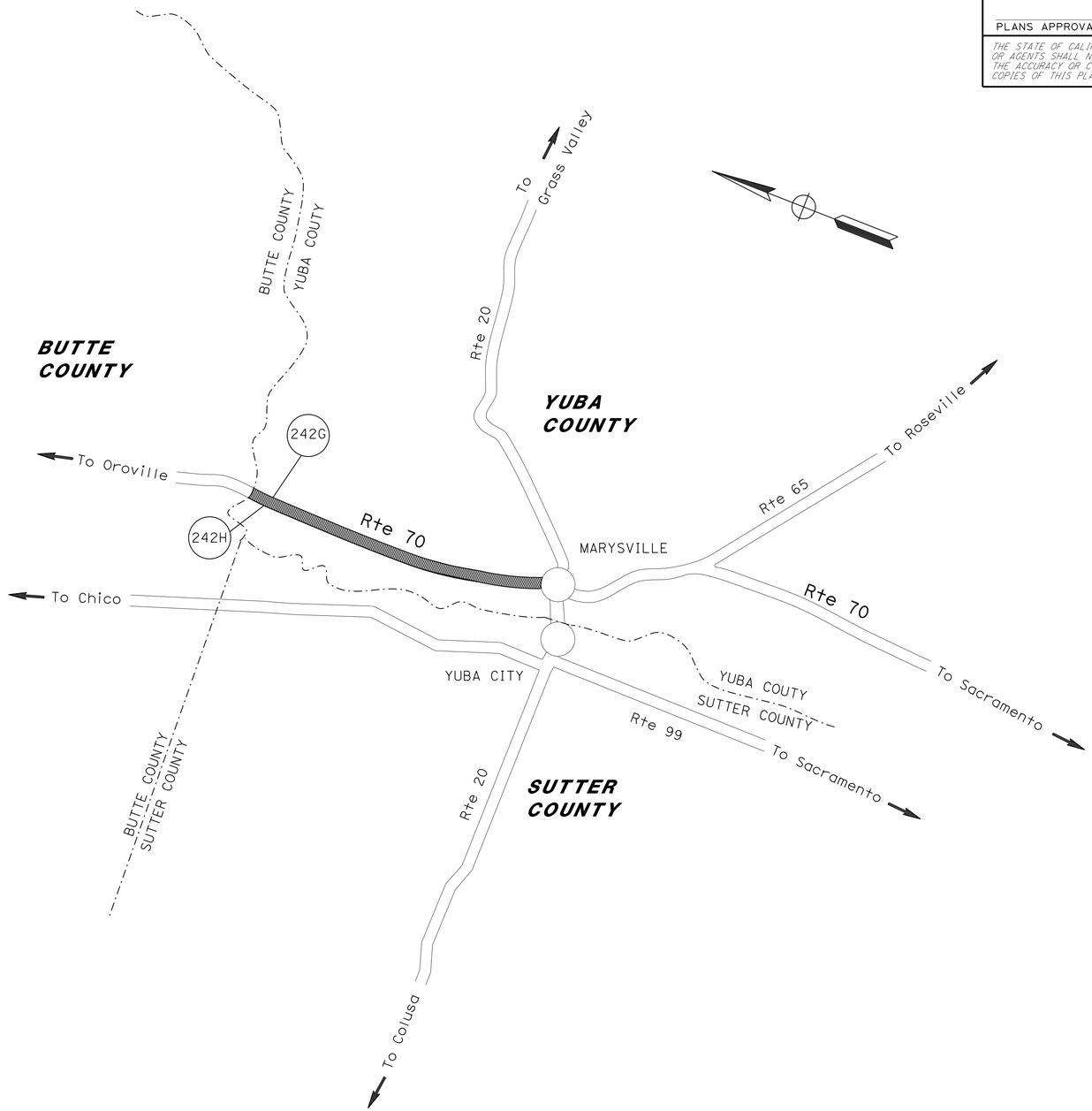

LOCATIONS OF CONSTRUCTION

NO SCALE

LC-8

BAO VANG — CALCULATED-DESIGNED BY
ERIC SOUZA — CHECKED BY
REVISED BY
DATE REVISED
FUNCTIONAL SUPERVISOR: STEPHEN WRIGHT

STATE OF CALIFORNIA - DEPARTMENT OF TRANSPORTATION
Caltrans®
TRAFFIC

LAST REVISION 00-00-00
DATE PLOTTED => 29-MAY-2014
TIME PLOTTED => 08:42

BORDER LAST REVISED 7/2/2010

USERNAME => s130875
DGN FILE => 0300020450ba008.dgn

RELATIVE BORDER SCALE IS IN INCHES 0 1 2 3

UNIT 0399

PROJECT NUMBER & PHASE 03000204501

Dist	COUNTY	ROUTE	POST MILES TOTAL PROJECT	SHEET No.	TOTAL SHEETS
03	But,Col,Gln Sut,Yol,Yub	16,32,45 70,113,162	Var	10	195

2-10-14
REGISTERED CIVIL ENGINEER DATE

2-10-14
PLANS APPROVAL DATE

REGISTERED PROFESSIONAL ENGINEER
ERIC NORMAN SOUZA
No. 75706
Exp. 06-30-14
CIVIL
STATE OF CALIFORNIA

THE STATE OF CALIFORNIA OR ITS OFFICERS OR AGENTS SHALL NOT BE RESPONSIBLE FOR THE ACCURACY OR COMPLETENESS OF SCANNED COPIES OF THIS PLAN SHEET.

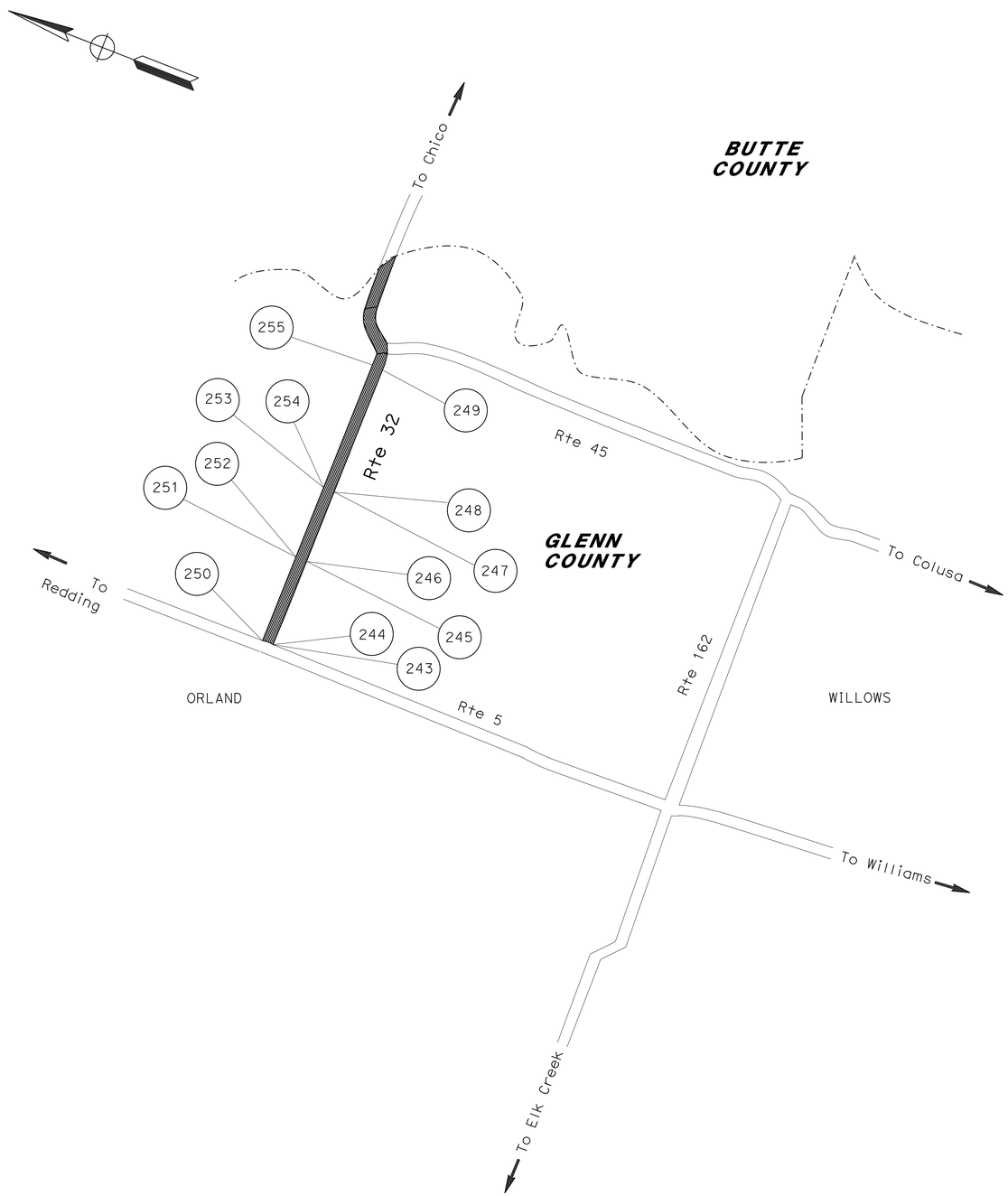

LOCATION	COUNTY	ROUTE	PM	DIRECTION
243	Gle	32	L0.00 TO L0.01	EB
244	Gle	32	L0.03 TO L0.05	EB
245	Gle	32	2.23 TO 2.25	EB
246	Gle	32	2.26 TO 2.28	EB
247	Gle	32	R5.22 TO R5.24	EB
248	Gle	32	R5.53 TO R5.55	EB
249	Gle	32	9.56 TO 9.58	EB
250	Gle	32	L0.03 TO L0.05	WB
251	Gle	32	2.23 TO 2.25	WB
252	Gle	32	2.26 TO 2.28	WB
253	Gle	32	R5.22 TO R5.24	WB
254	Gle	32	R5.53 TO R5.55	WB
255	Gle	32	9.56 TO 9.58	WB

LOCATIONS OF CONSTRUCTION

NO SCALE

LC-9

REVISED BY | DATE REVISED
BAO VANG | ERIC SOUZA
CALCULATED-DESIGNED BY | CHECKED BY
FUNCTIONAL SUPERVISOR: STEPHEN WRIGHT

STATE OF CALIFORNIA - DEPARTMENT OF TRANSPORTATION
Caltrans® TRAFFIC

LAST REVISION 00-00-00 | DATE PLOTTED => 29-MAY-2014 | TIME PLOTTED => 08:42

BORDER LAST REVISED 7/2/2010 | USERNAME => s130875 | DGN FILE => 0300020450ba009.dgn | RELATIVE BORDER SCALE IS IN INCHES 0 1 2 3 | UNIT 0399 | PROJECT NUMBER & PHASE 03000204501

Dist	COUNTY	ROUTE	POST MILES TOTAL PROJECT	SHEET No.	TOTAL SHEETS
03	But,Col,Gln Sut,Yol,Yub	16,32,45 70,113,162	Var	11	195

2-10-14
REGISTERED CIVIL ENGINEER DATE

2-10-14
PLANS APPROVAL DATE

REGISTERED PROFESSIONAL ENGINEER
ERIC NORMAN SOUZA
No. 75706
Exp. 06-30-14
CIVIL
STATE OF CALIFORNIA

THE STATE OF CALIFORNIA OR ITS OFFICERS OR AGENTS SHALL NOT BE RESPONSIBLE FOR THE ACCURACY OR COMPLETENESS OF SCANNED COPIES OF THIS PLAN SHEET.

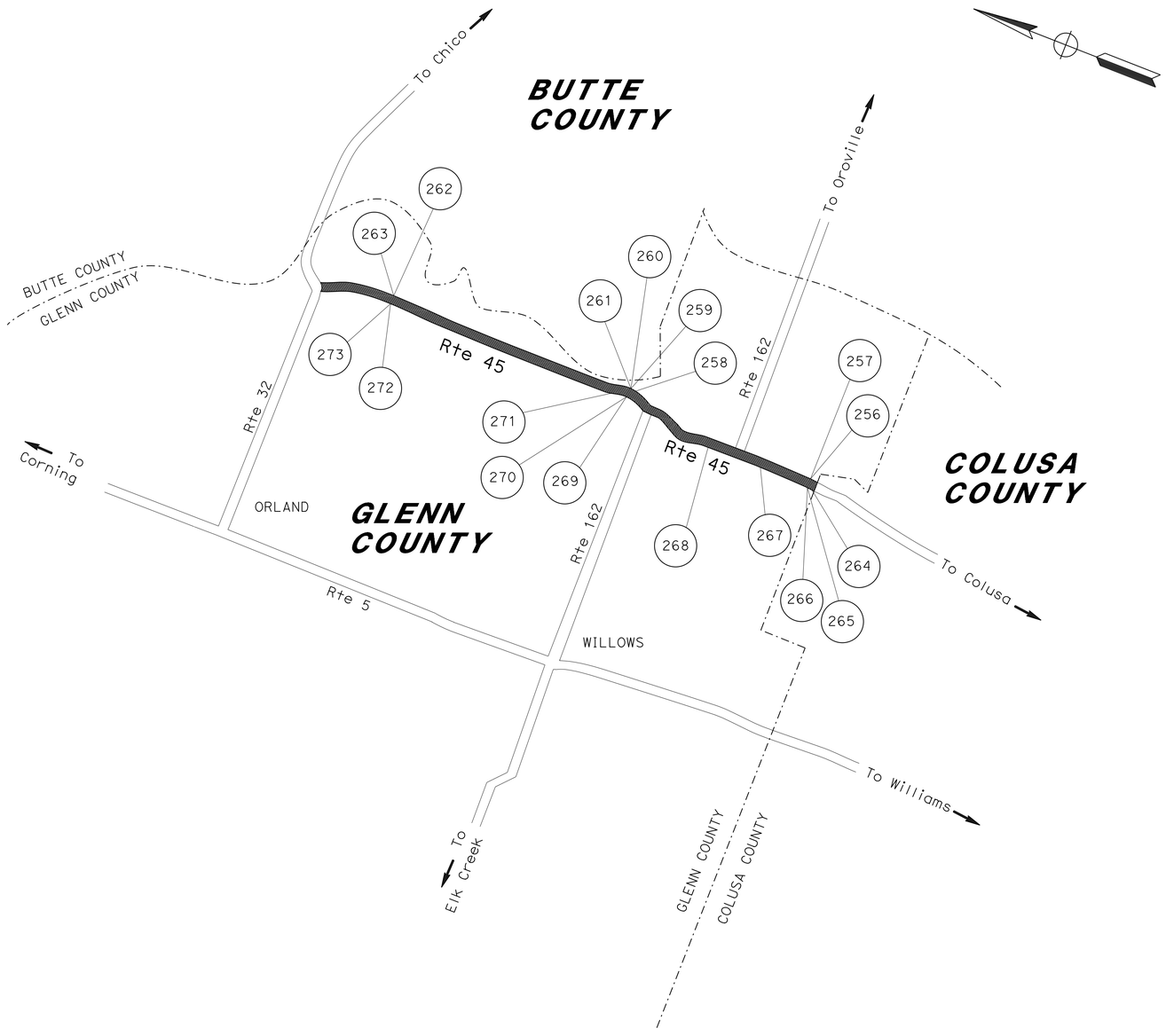

LOCATION	COUNTY	ROUTE	PM	DIRECTION
256	Gle	45	0.63 TO 0.78	NB
257	Gle	45	0.99 TO 1.03	NB
258	Gle	45	8.19 TO 8.21	NB
259	Gle	45	9.77 TO 9.83	NB
260	Gle	45	9.83 TO 10.06	NB
261	Gle	45	10.07 TO 10.14	NB
262	Gle	45	R20.63 TO R20.65	NB
263	Gle	45	R20.75 TO R20.77	NB
264	Gle	45	0.00 TO 0.02	SB
265	Gle	45	0.54 TO 0.58	SB
266	Gle	45	0.58 TO 0.60	SB
267	Gle	45	2.38 TO 2.47	SB
268	Gle	45	4.37 TO 4.39	SB
269	Gle	45	9.79 TO 9.83	SB
270	Gle	45	9.83 TO 9.88	SB
271	Gle	45	10.07 TO 10.13	SB
272	Gle	45	R20.63 TO R20.65	SB
273	Gle	45	R20.75 TO R20.77	SB

LOCATIONS OF CONSTRUCTION

NO SCALE

LC-10

REVISED BY	DATE REVISED

CALCULATED-DESIGNED BY: BAO VANG
CHECKED BY: ERIC SOUZA
FUNCTIONAL SUPERVISOR: STEPHEN WRIGHT

STATE OF CALIFORNIA - DEPARTMENT OF TRANSPORTATION
Caltrans®
TRAFFIC

LAST REVISION 00-00-00
DATE PLOTTED => 29-MAY-2014
TIME PLOTTED => 08:42

BORDER LAST REVISED 7/2/2010
USERNAME => s130875
DGN FILE => 0300020450ba010.dgn
RELATIVE BORDER SCALE IS IN INCHES 0 1 2 3
UNIT 0399
PROJECT NUMBER & PHASE 03000204501

Dist	COUNTY	ROUTE	POST MILES TOTAL PROJECT	SHEET No.	TOTAL SHEETS
03	But,Col,Gln Sut,Yol,Yub	16,32,45 70,113,162	Var	12	195

2-10-14
REGISTERED CIVIL ENGINEER DATE

2-10-14
PLANS APPROVAL DATE

REGISTERED PROFESSIONAL ENGINEER
ERIC NORMAN SOUZA
No. 75706
Exp. 06-30-14
CIVIL
STATE OF CALIFORNIA

THE STATE OF CALIFORNIA OR ITS OFFICERS OR AGENTS SHALL NOT BE RESPONSIBLE FOR THE ACCURACY OR COMPLETENESS OF SCANNED COPIES OF THIS PLAN SHEET.

LOCATION	COUNTY	ROUTE	PM	DIRECTION
274	Gle	162	42.19 TO 42.21	EB
275	Gle	162	42.93 TO 42.95	EB
276	Gle	162	44.30 TO 44.32	EB
277	Gle	162	R45.09 TO R45.10	EB
278	Gle	162	R45.19 TO R45.21	EB
279	Gle	162	48.76 TO 48.79	EB
280	Gle	162	48.95 TO 48.98	EB
281	Gle	162	49.26 TO 49.30	EB
282	Gle	162	49.93 TO 49.95	EB
283	Gle	162	51.07 TO 51.10	EB
284	Gle	162	51.68 TO 51.70	EB
285	Gle	162	53.68 TO 53.70	EB
286	Gle	162	54.17 TO 54.20	EB
289	Gle	162	61.94 TO 61.97	EB
290	Gle	162	62.36 TO 62.37	EB
291	Gle	162	62.39 TO 62.41	EB
292	Gle	162	67.19 TO 67.20	EB
293	Gle	162	67.21 TO 67.23	EB
294	Gle	162	68.14 TO 68.16	EB
295	Gle	162	68.18 TO 68.20	EB
296	Gle	162	70.58 TO 70.60	EB
297	Gle	162	70.61 TO 70.63	EB
298	Gle	162	73.54 TO 73.55	EB
299	Gle	162	73.56 TO 73.58	EB
300	Gle	162	74.51 TO 74.53	EB
301	Gle	162	74.53 TO 74.56	EB
302	Gle	162	74.57 TO 74.58	EB
303	Gle	162	76.24 TO 76.25	EB
304	Gle	162	76.70 TO 76.71	EB
305	Gle	162	77.55 TO 77.67	EB
306	Gle	162	79.06 TO 79.07	EB
307	Gle	162	79.09 TO 79.10	EB
308	Gle	162	79.54 TO 79.55	EB
309	Gle	162	79.57 TO 79.58	EB
310	Gle	162	79.95 TO 79.96	EB
311	Gle	162	79.97 TO 79.99	EB
312	Gle	162	80.01 TO 80.03	EB
313	Gle	162	80.04 TO 80.06	EB
314	Gle	162	80.71 TO 80.73	EB
315	Gle	162	80.75 TO 80.77	EB
316	Gle	162	81.61 TO 81.63	EB
317	Gle	162	81.71 TO 81.73	EB
318	Gle	162	81.84 TO 81.86	EB
319	Gle	162	81.88 TO 81.90	EB
320	Gle	162	81.99 TO 82.01	EB
321	Gle	162	82.05 TO 82.07	EB
322	Gle	162	83.65 TO 83.67	EB
323	Gle	162	83.69 TO 83.71	EB
324	Gle	162	83.78 TO 83.80	EB
325	Gle	162	83.84 TO 83.88	EB
326	Gle	162	83.90 TO 83.92	EB
327	Gle	162	84.56 TO 84.57	EB
328	Gle	162	84.58 TO 84.59	EB

LOCATION	COUNTY	ROUTE	PM	DIRECTION
329	Gle	162	42.16 TO 42.22	WB
330	Gle	162	42.93 TO 42.95	WB
331	Gle	162	44.30 TO 44.32	WB
332	Gle	162	45.02 TO 45.10	WB
333	Gle	162	R45.19 TO R45.21	WB
334	Gle	162	48.95 TO 48.98	WB
335	Gle	162	49.26 TO 49.30	WB
336	Gle	162	49.93 TO 49.95	WB
337	Gle	162	51.07 TO 51.10	WB
338	Gle	162	51.68 TO 51.70	WB
339	Gle	162	53.68 TO 53.70	WB
340	Gle	162	54.17 TO 54.20	WB
343	Gle	162	61.94 TO 61.97	WB
344	Gle	162	62.36 TO 62.37	WB
345	Gle	162	62.39 TO 62.41	WB
346	Gle	162	65.48 TO 65.50	WB
347	Gle	162	65.52 TO 65.55	WB
348	Gle	162	67.19 TO 67.20	WB
349	Gle	162	67.21 TO 67.23	WB
350	Gle	162	68.14 TO 68.16	WB
351	Gle	162	68.18 TO 68.20	WB
352	Gle	162	70.57 TO 70.59	WB
353	Gle	162	70.60 TO 70.62	WB
354	Gle	162	73.54 TO 73.55	WB
355	Gle	162	73.56 TO 73.58	WB
356	Gle	162	74.51 TO 74.53	WB
357	Gle	162	74.52 TO 74.56	WB
358	Gle	162	74.57 TO 74.58	WB
359	Gle	162	74.58 TO 74.59	WB
360	Gle	162	76.24 TO 76.25	WB
361	Gle	162	76.70 TO 76.71	WB
362	Gle	162	79.06 TO 79.07	WB
363	Gle	162	79.09 TO 79.10	WB
364	Gle	162	79.54 TO 79.55	WB
365	Gle	162	79.57 TO 79.58	WB
366	Gle	162	79.95 TO 79.96	WB
367	Gle	162	79.97 TO 79.99	WB
368	Gle	162	80.01 TO 80.03	WB
369	Gle	162	80.04 TO 80.06	WB
370	Gle	162	80.71 TO 80.73	WB
371	Gle	162	80.75 TO 80.77	WB
372	Gle	162	81.61 TO 81.63	WB
373	Gle	162	81.71 TO 81.73	WB
374	Gle	162	81.84 TO 81.86	WB
375	Gle	162	81.88 TO 81.90	WB
376	Gle	162	81.99 TO 82.01	WB
377	Gle	162	82.05 TO 82.07	WB
378	Gle	162	83.65 TO 83.67	WB
379	Gle	162	83.69 TO 83.71	WB
380	Gle	162	83.78 TO 83.80	WB
381	Gle	162	83.84 TO 83.88	WB
382	Gle	162	83.90 TO 83.92	WB
383	Gle	162	84.58 TO 84.59	WB

NOTE: SEE SHEETS LC-12 AND LC-13 FOR MAP OF LOCATIONS OF CONSTRUCTION

LOCATIONS OF CONSTRUCTION

NO SCALE

LC-11

REVISED BY	
DATE REVISED	
BAO VANG	CALCULATED-DESIGNED BY
ERIC SOUZA	CHECKED BY
FUNCTIONAL SUPERVISOR	
STEPHEN WRIGHT	

STATE OF CALIFORNIA - DEPARTMENT OF TRANSPORTATION
Caltrans®
TRAFFIC

LAST REVISION 00-00-00
DATE PLOTTED =>
TIME PLOTTED =>

BORDER LAST REVISED 7/2/2010

USERNAME => s130875
DGN FILE => 0300020450ba011.dgn

RELATIVE BORDER SCALE IS IN INCHES 0 1 2 3

UNIT 0399

PROJECT NUMBER & PHASE 03000204501

Dist	COUNTY	ROUTE	POST MILES TOTAL PROJECT	SHEET No.	TOTAL SHEETS
03	But,Col,Gln Sut,Yol,Yub	16,32,45 70,113,162	Var	13	195

REGISTERED CIVIL ENGINEER 2-10-14 DATE

PLANS APPROVAL DATE 2-10-14

REGISTERED PROFESSIONAL ENGINEER ERIC NORMAN SOUZA No. 75706 Exp. 06-30-14 CIVIL STATE OF CALIFORNIA

THE STATE OF CALIFORNIA OR ITS OFFICERS OR AGENTS SHALL NOT BE RESPONSIBLE FOR THE ACCURACY OR COMPLETENESS OF SCANNED COPIES OF THIS PLAN SHEET.

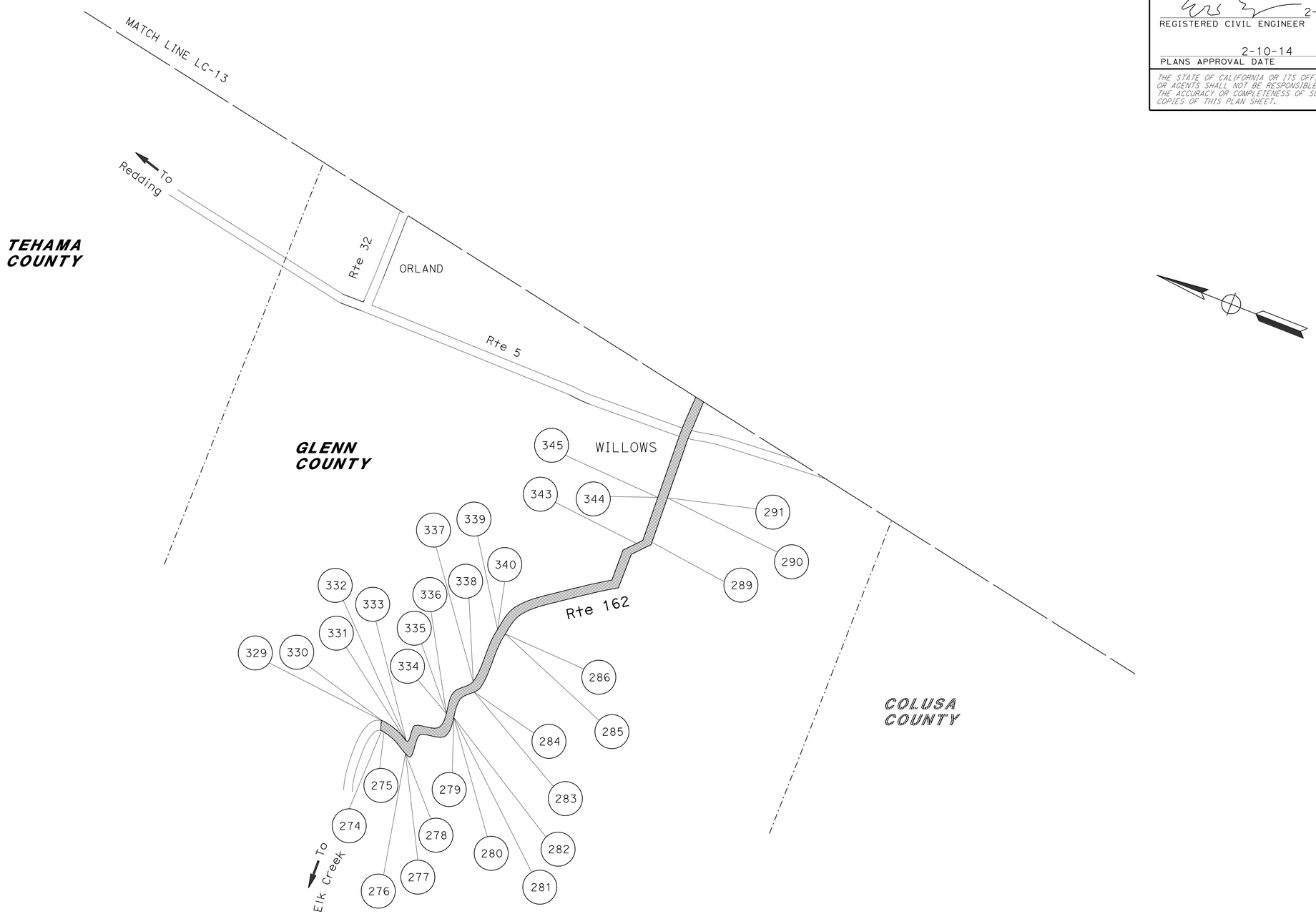

LOCATIONS OF CONSTRUCTION

NO SCALE

LC-12

STATE OF CALIFORNIA - DEPARTMENT OF TRANSPORTATION

Caltrans

TRAFFIC

FUNCTIONAL SUPERVISOR: STEPHEN WRIGHT

CALCULATED-DESIGNED BY: BAO VANG

CHECKED BY: ERIC SOUZA

REVISED BY

DATE REVISED

LAST REVISION 00-00-00

DATE PLOTTED =>

TIME PLOTTED =>

BORDER LAST REVISED 7/2/2010

USERNAME => s130875

DGN FILE => 0300020450ba012.dgn

RELATIVE BORDER SCALE IS IN INCHES 0 1 2 3

UNIT 0399

PROJECT NUMBER & PHASE 03000204501

Dist	COUNTY	ROUTE	POST MILES TOTAL PROJECT	SHEET No.	TOTAL SHEETS
03	But,Col,Gln Sut,Yol,Yub	16,32,45 70,113,162	Var	14	195

2-10-14
REGISTERED CIVIL ENGINEER DATE

2-10-14
PLANS APPROVAL DATE

REGISTERED PROFESSIONAL ENGINEER
ERIC NORMAN SOUZA
No. 75706
Exp. 06-30-14
CIVIL
STATE OF CALIFORNIA

THE STATE OF CALIFORNIA OR ITS OFFICERS OR AGENTS SHALL NOT BE RESPONSIBLE FOR THE ACCURACY OR COMPLETENESS OF SCANNED COPIES OF THIS PLAN SHEET.

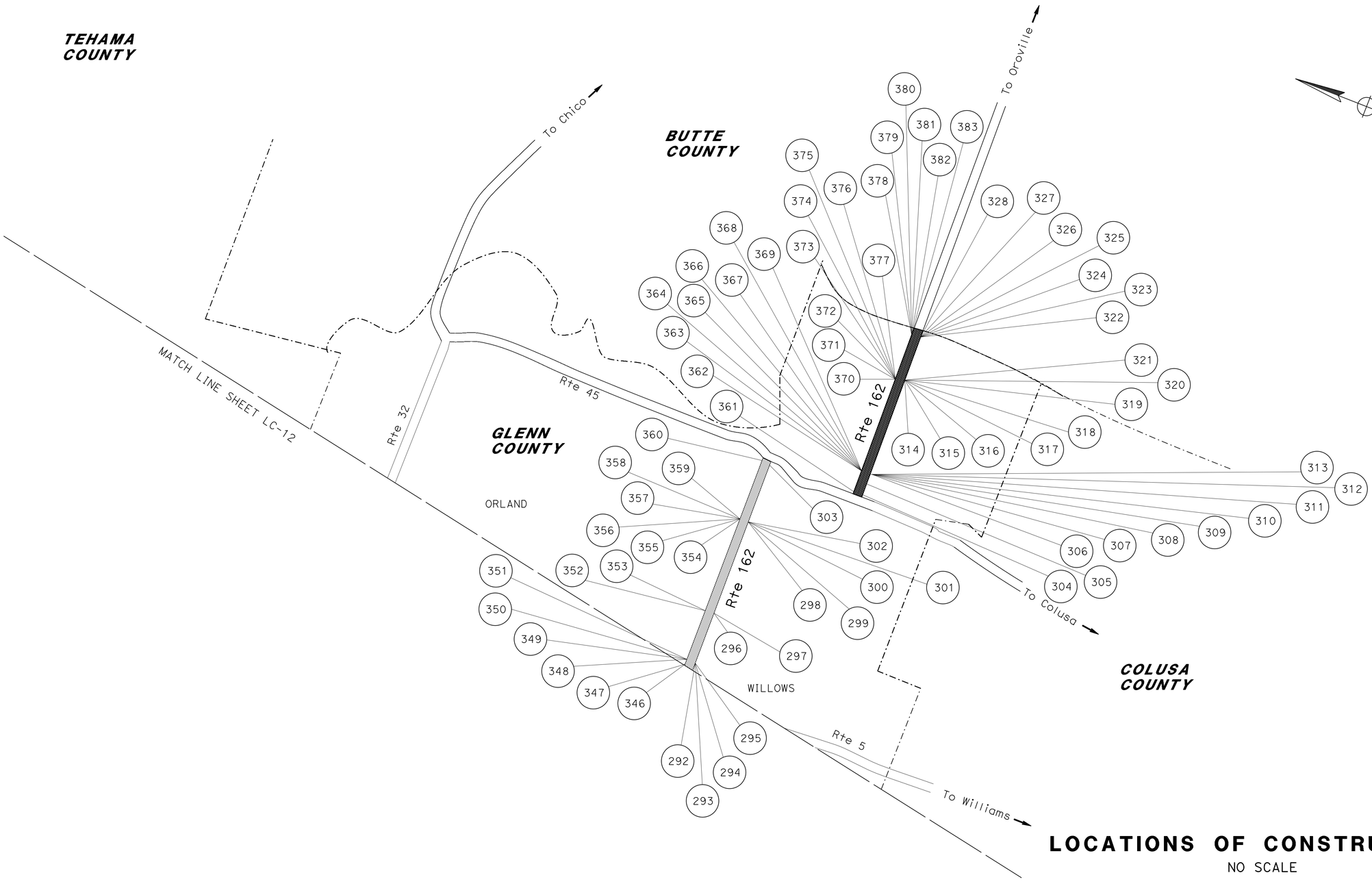

LOCATIONS OF CONSTRUCTION

NO SCALE

LC-13

STATE OF CALIFORNIA - DEPARTMENT OF TRANSPORTATION
Caltrans®
TRAFFIC

FUNCTIONAL SUPERVISOR: STEPHEN WRIGHT

CALCULATED-DESIGNED BY: BAO VANG
CHECKED BY: ERIC SOUZA

REVISED BY | DATE REVISED

LAST REVISION 00-00-00 DATE PLOTTED => TIME PLOTTED =>

BORDER LAST REVISED 7/2/2010

USERNAME => s130875
DGN FILE => 0300020450ba013.dgn

RELATIVE BORDER SCALE IS IN INCHES 0 1 2 3

UNIT 0399

PROJECT NUMBER & PHASE 03000204501

Dist	COUNTY	ROUTE	POST MILES TOTAL PROJECT	SHEET No.	TOTAL SHEETS
03	But,Col,Gln Sut,Yol,Yub	16,32,45 70,113,162	Var	15	195

REGISTERED CIVIL ENGINEER — DATE: 2-10-14

PLANS APPROVAL DATE: 2-10-14

REGISTERED PROFESSIONAL ENGINEER — ERIC NORMAN SOUZA — No. 75706 — Exp. 06-30-14 — CIVIL — STATE OF CALIFORNIA

THE STATE OF CALIFORNIA OR ITS OFFICERS OR AGENTS SHALL NOT BE RESPONSIBLE FOR THE ACCURACY OR COMPLETENESS OF SCANNED COPIES OF THIS PLAN SHEET.

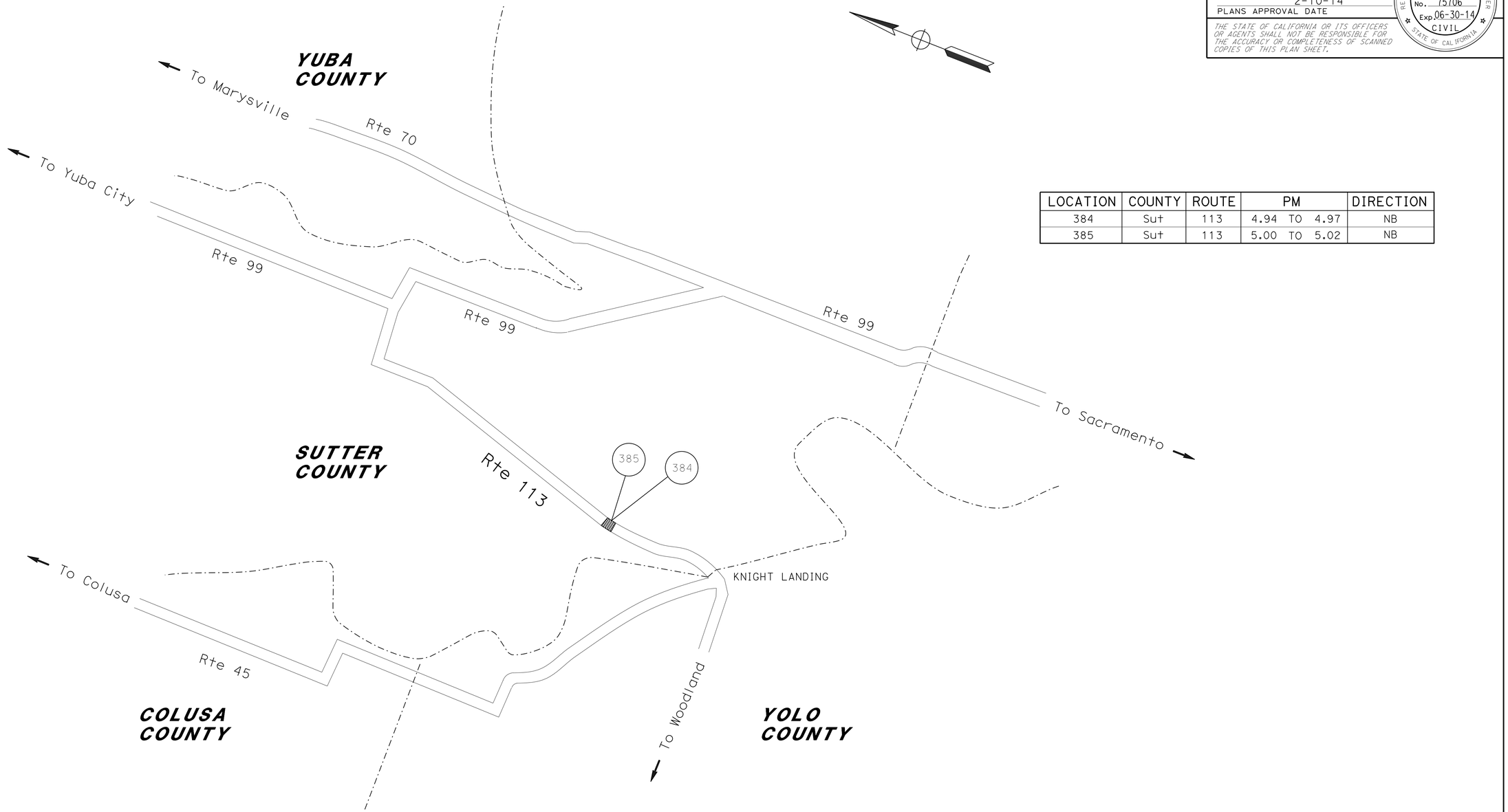

LOCATION	COUNTY	ROUTE	PM	DIRECTION
384	Sut	113	4.94 TO 4.97	NB
385	Sut	113	5.00 TO 5.02	NB

LOCATIONS OF CONSTRUCTION

NO SCALE

LC-14

STATE OF CALIFORNIA - DEPARTMENT OF TRANSPORTATION
Caltrans®
TRAFFIC
FUNCTIONAL SUPERVISOR: STEPHEN WRIGHT
CALCULATED-DESIGNED BY: BAO VANG
CHECKED BY: ERIC SOUZA
REVISED BY
DATE REVISED

LAST REVISION 00-00-00
DATE PLOTTED => 29-MAY-2014
TIME PLOTTED => 08:42

BORDER LAST REVISED 7/2/2010
USERNAME => s130875
DGN FILE => 0300020450ba014.dgn
RELATIVE BORDER SCALE IS IN INCHES 0 1 2 3
UNIT 0399
PROJECT NUMBER & PHASE 03000204501

Dist	COUNTY	ROUTE	POST MILES TOTAL PROJECT	SHEET No.	TOTAL SHEETS
03	But,Col,Gln Sut,Yol,Yub	16,32,45 70,113,162	Var	16	195

REGISTERED CIVIL ENGINEER — DATE: 2-10-14

PLANS APPROVAL DATE: 2-10-14

REGISTERED PROFESSIONAL ENGINEER — ERIC NORMAN SOUZA — No. 75706 — Exp. 06-30-14 — CIVIL — STATE OF CALIFORNIA

THE STATE OF CALIFORNIA OR ITS OFFICERS OR AGENTS SHALL NOT BE RESPONSIBLE FOR THE ACCURACY OR COMPLETENESS OF SCANNED COPIES OF THIS PLAN SHEET.

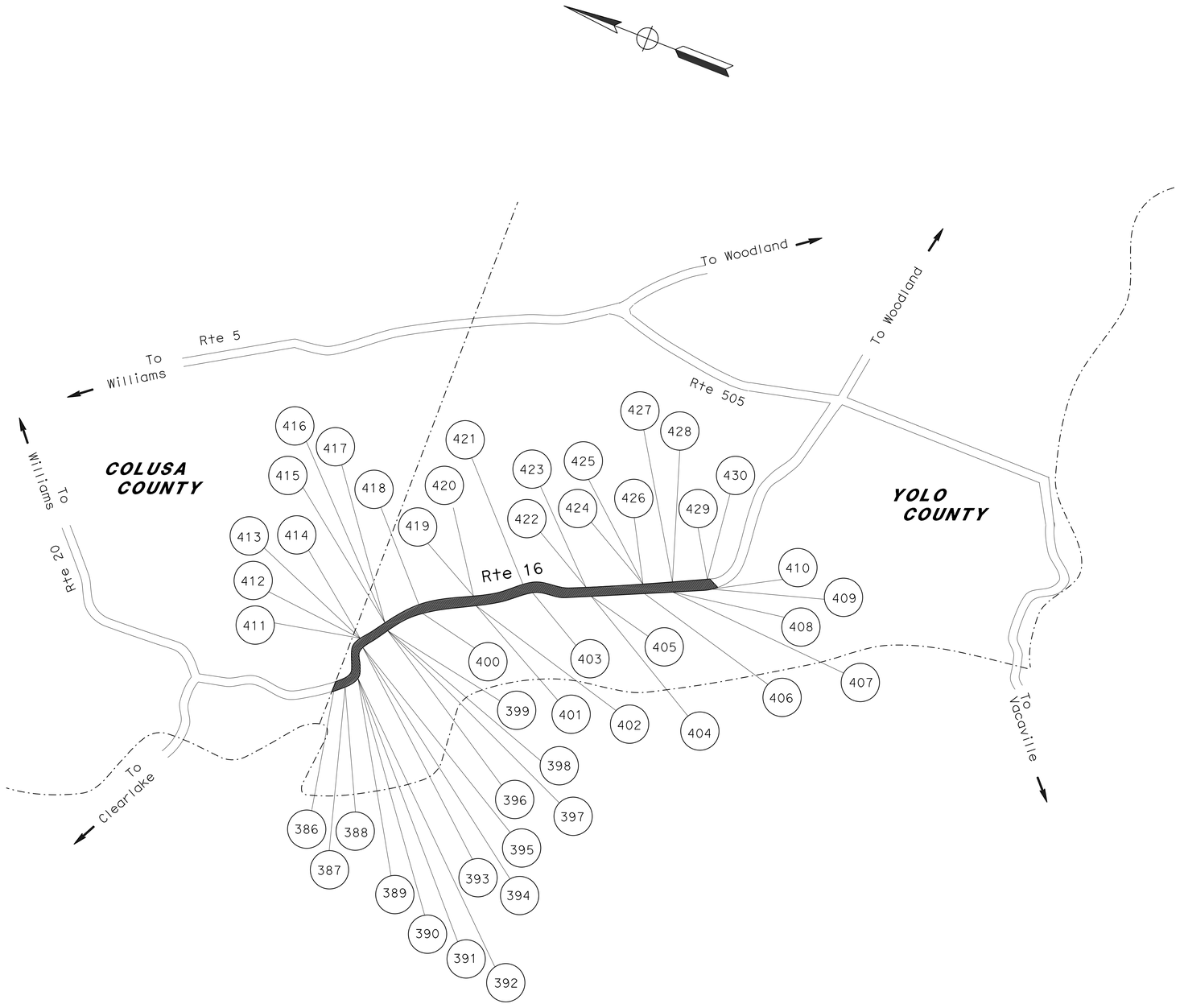

LOCATION	COUNTY	ROUTE	PM	DIRECTION
386	Yol	16	0.04 TO 0.23	EB
387	Yol	16	1.00 TO 1.06	EB
388	Yol	16	1.54 TO 1.68	EB
389	Yol	16	1.80 TO 1.93	EB
390	Yol	16	2.02 TO 2.12	EB
391	Yol	16	2.45 TO 2.56	EB
392	Yol	16	2.77 TO 3.16	EB
393	Yol	16	3.20 TO 3.28	EB
394	Yol	16	3.87 TO 3.89	EB
395	Yol	16	3.94 TO 3.96	EB
396	Yol	16	5.44 TO 5.49	EB
397	Yol	16	6.34 TO 6.36	EB
398	Yol	16	6.37 TO 6.38	EB
399	Yol	16	7.96 TO 7.98	EB
400	Yol	16	9.94 TO 9.97	EB
401	Yol	16	11.45 TO 11.47	EB
402	Yol	16	11.48 TO 11.49	EB
403	Yol	16	13.59 TO 13.62	EB
404	Yol	16	14.99 TO 15.01	EB
405	Yol	16	15.02 TO 15.04	EB
406	Yol	16	16.25 TO 16.27	EB
407	Yol	16	17.99 TO 18.00	EB
408	Yol	16	18.01 TO 18.03	EB
409	Yol	16	20.11 TO 20.12	EB
410	Yol	16	20.14 TO 20.15	EB
411	Yol	16	3.87 TO 3.89	WB
412	Yol	16	3.94 TO 3.96	WB
413	Yol	16	4.04 TO 4.20	WB
414	Yol	16	4.56 TO 4.87	WB
415	Yol	16	6.34 TO 6.36	WB
416	Yol	16	6.37 TO 6.39	WB
417	Yol	16	7.96 TO 7.98	WB
418	Yol	16	9.94 TO 9.97	WB
419	Yol	16	11.45 TO 11.47	WB
420	Yol	16	11.48 TO 11.50	WB
421	Yol	16	13.59 TO 13.62	WB
422	Yol	16	14.99 TO 15.01	WB
423	Yol	16	15.02 TO 15.04	WB
424	Yol	16	16.25 TO 16.27	WB
425	Yol	16	16.28 TO 16.29	WB
426	Yol	16	16.30 TO 16.33	WB
427	Yol	16	17.99 TO 18.00	WB
428	Yol	16	18.01 TO 18.03	WB
429	Yol	16	20.11 TO	WB
430	Yol	16	20.14 TO 20.15	WB

LOCATIONS OF CONSTRUCTION

NO SCALE

LC-15

STATE OF CALIFORNIA - DEPARTMENT OF TRANSPORTATION
TRAFFIC
FUNCTIONAL SUPERVISOR: STEPHEN WRIGHT
CALCULATED-DESIGNED BY: ERIC SOUZA
CHECKED BY: BAO VANG
REVISED BY | DATE REVISED

LAST REVISION: 00-00-00 | DATE PLOTTED => 29-MAY-2014 | TIME PLOTTED => 08:42

BORDER LAST REVISED 7/2/2010 | USERNAME => s130875 | DGN FILE => 0300020450ba015.dgn | RELATIVE BORDER SCALE IS IN INCHES 0 1 2 3 | UNIT 0399 | PROJECT NUMBER & PHASE 03000204501

Dist	COUNTY	ROUTE	POST MILES TOTAL PROJECT	SHEET No.	TOTAL SHEETS
03	But,Col,Gln Sut,Yol,Yub	16,32,45 70,113,162	Var	17	195

REGISTERED CIVIL ENGINEER — 2-10-14 DATE

2-10-14
PLANS APPROVAL DATE

REGISTERED PROFESSIONAL ENGINEER
ERIC NORMAN SOUZA
No. 75706
Exp. 06-30-14
CIVIL
STATE OF CALIFORNIA

THE STATE OF CALIFORNIA OR ITS OFFICERS OR AGENTS SHALL NOT BE RESPONSIBLE FOR THE ACCURACY OR COMPLETENESS OF SCANNED COPIES OF THIS PLAN SHEET.

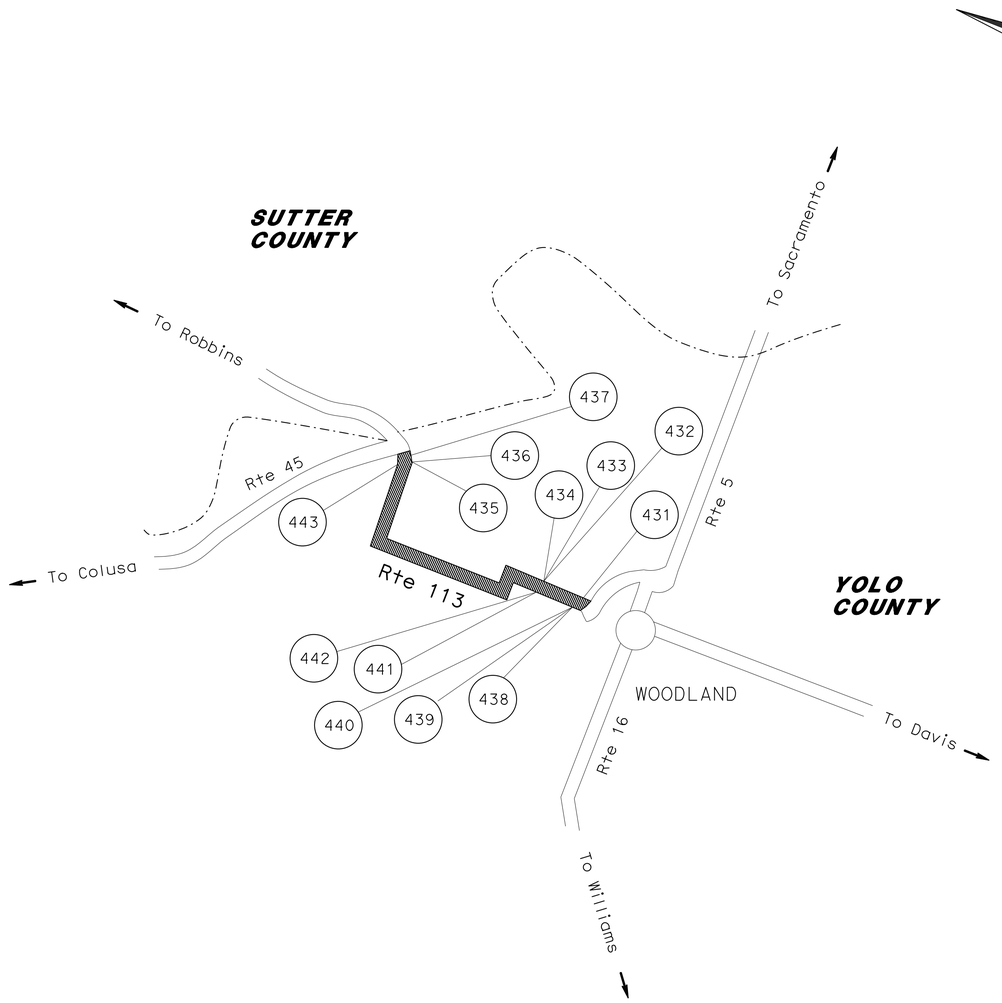

LOCATION	COUNTY	ROUTE	PM	DIRECTION
431	Yol	113	11.74 TO 11.76	NB
432	Yol	113	13.06 TO 13.07	NB
433	Yol	113	13.08 TO 13.09	NB
434	Yol	113	13.14 TO 13.16	NB
435	Yol	113	M21.24 TO M21.26	NB
436	Yol	113	R21.34 TO R21.36	NB
437	Yol	113	21.97 TO 21.98	NB
438	Yol	113	11.44 TO 11.48	SB
439	Yol	113	11.70 TO 11.72	SB
440	Yol	113	11.78 TO 11.80	SB
441	Yol	113	13.07 TO 13.09	SB
442	Yol	113	13.14 TO 13.16	SB
443	Yol	113	M21.24 TO M21.26	SB

LOCATIONS OF CONSTRUCTION

NO SCALE

LC-16

REVISED BY	
DATE REVISED	
BAO VANG	CALCULATED-DESIGNED BY
ERIC SOUZA	CHECKED BY
FUNCTIONAL SUPERVISOR	
STEPHEN WRIGHT	

STATE OF CALIFORNIA - DEPARTMENT OF TRANSPORTATION
Caltrans
TRAFFIC

LAST REVISION 00-00-00
DATE PLOTTED => 29-MAY-2014
TIME PLOTTED => 08:42

BORDER LAST REVISED 7/2/2010

USERNAME => s130875
DGN FILE => 0300020450ba016.dgn

RELATIVE BORDER SCALE IS IN INCHES 0 1 2 3

UNIT 0399

PROJECT NUMBER & PHASE 03000204501

Dist	COUNTY	ROUTE	POST MILES TOTAL PROJECT	SHEET No.	TOTAL SHEETS
03	But,Col,Gln Sut,Yol,Yub	16,32,45 70,113,162	Var	18	195

REGISTERED CIVIL ENGINEER — DATE 2-10-14

PLANS APPROVAL DATE 2-10-14

REGISTERED PROFESSIONAL ENGINEER — ERIC NORMAN SOUZA — No. 75706 — Exp. 06-30-14 — CIVIL — STATE OF CALIFORNIA

THE STATE OF CALIFORNIA OR ITS OFFICERS OR AGENTS SHALL NOT BE RESPONSIBLE FOR THE ACCURACY OR COMPLETENESS OF SCANNED COPIES OF THIS PLAN SHEET.

NOTES

1. EXISTING BARRIER DIMENSIONS SHALL BE VERIFIED BY THE CONTRACTOR IN THE FIELD BEFORE FABRICATING ANY END CONNECTOR WITH EXISTING CONDITIONS.
2. EXISTING UTILITY FACILITIES HAVE NOT BEEN PLOTTED ON THESE PLANS.
3. LOCATIONS 14 THRU 21, 35 AND 36, EXISTING SNOW POLES AND MARKERS SHALL REMAIN IN PLACE, IF NECESSARY RELOCATION SHALL BE AS DIRECTED BY THE ENGINEER.
4. FOR ACCURATE RIGHT OF WAY DATA, CONTACT RIGHT OF WAY ENGINEERING AT THE DISTRICT OFFICE.
5. FOR DETAILS NOT SHOWN SEE STANDARD PLANS, AND MANUFACTURER DETAILS.
6. ALL FIELD DIMENSIONS SHALL BE VERIFIED BY THE CONTRACTOR PRIOR TO CONSTRUCTION.
7. SEE STANDARD PLANS RSP A77N5, RSP A77N6, A77N7, A77N8, A77N9 AND A77N10 FOR VEGETATION CONTROL (MINOR CONCRETE) DETAILS
8. ALL SIGNS AND DELINEATORS SHALL REMAIN OR BE RESET IN PLACE AS DIRECTED BY THE ENGINEER.
9. MGS (7′ POST) REFERS TO EITHER A 7′ WOOD POST OR AN 8′ STEEL POST AND IS TO BE USED WHERE NARROW ROADWAY INSTALLATION IS REQUIRED. THE POTENTIAL MORE NARROW ROADWAY INSTALLATIONS COULD BE EXPECTED BASED ON FIELD CONDITIONS AS DETERMINED BY THE ENGINEER. SEE RSP A77N1, A77N2, A77N3 AND SHEET C-109 FOR FURTHER DETAILS.

ABBREVIATIONS

AFTS - ALTERNATIVE FLARED TERMINAL SYSTEM
AILTS - ALTERNATIVE IN LINE TERMINAL SYSTEM
WES - WRAP END SECTION

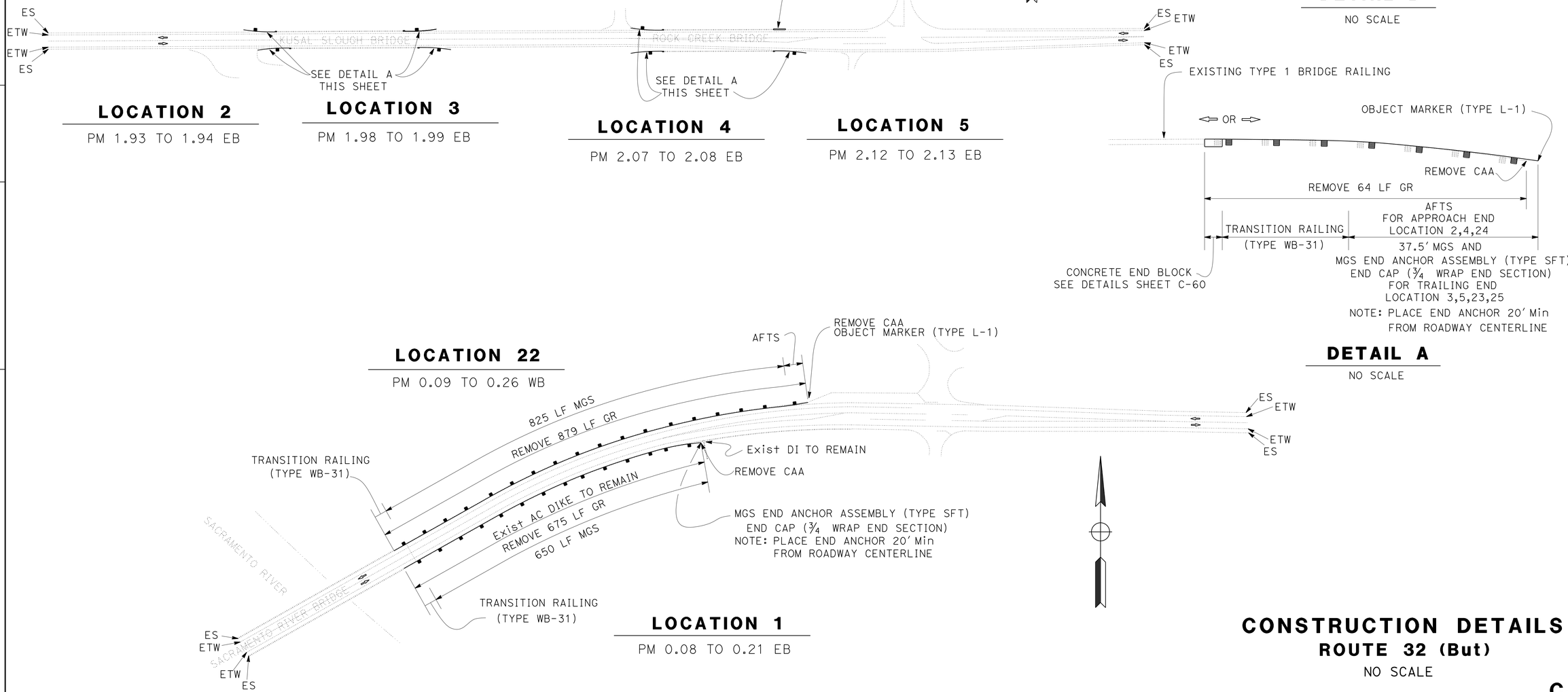

CONSTRUCTION DETAILS
ROUTE 32 (But)
NO SCALE

C-1

LAST REVISION 11-12-13
DATE PLOTTED => 29-MAY-2014
TIME PLOTTED => 08:42

STATE OF CALIFORNIA - DEPARTMENT OF TRANSPORTATION
Caltrans®
TRAFFIC
FUNCTIONAL SUPERVISOR: STEPHEN WRIGHT
CALCULATED-DESIGNED BY
CHECKED BY: ERIC SOUZA
DETAILED BY: AL G. CHIN
REVISED BY
DATE REVISED

Dist	COUNTY	ROUTE	POST MILES TOTAL PROJECT	SHEET No.	TOTAL SHEETS
03	But,Col,Gln Sut,Yol,Yub	16,32,45 70,113,162	Var	19	195

REGISTERED CIVIL ENGINEER — 2-10-14 DATE

ERIC NORMAN SOUZA No. 75706 Exp.06-30-14 CIVIL — REGISTERED PROFESSIONAL ENGINEER — STATE OF CALIFORNIA

2-10-14
PLANS APPROVAL DATE

THE STATE OF CALIFORNIA OR ITS OFFICERS OR AGENTS SHALL NOT BE RESPONSIBLE FOR THE ACCURACY OR COMPLETENESS OF SCANNED COPIES OF THIS PLAN SHEET.

NOTE:

1. FOR ACCURATE RIGHT OF WAY DATA, CONTACT RIGHT OF WAY ENGINEERING AT THE DISTRICT OFFICE.
2. EXISTING UTILITY FACILITIES HAVE NOT BEEN PLOTTED ON THESE PLANS.

LOCATION 31

PM 3.73 TO 3.74 WB

LOCATION 32

PM 3.75 TO 3.76 WB

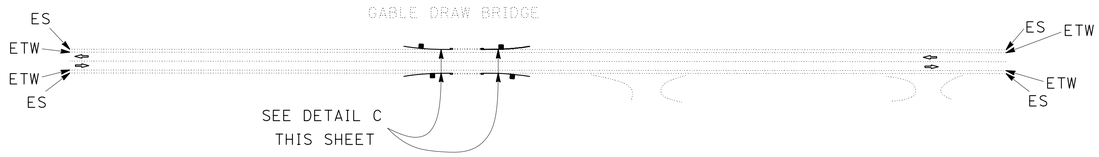

LOCATION 10

PM 3.73 TO 3.74 EB

LOCATION 11

PM 3.75 TO 3.76 EB

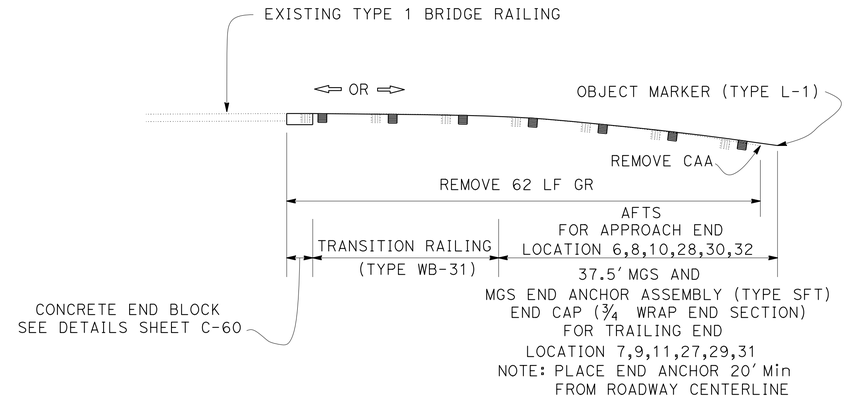

DETAIL C

NO SCALE

LOCATION 28

PM 2.34 TO 2.35 WB

LOCATION 29

PM 2.37 TO 2.38 WB

LOCATION 27

PM 2.32 TO 2.33 WB

LOCATION 30

PM 2.38 TO 2.40 WB

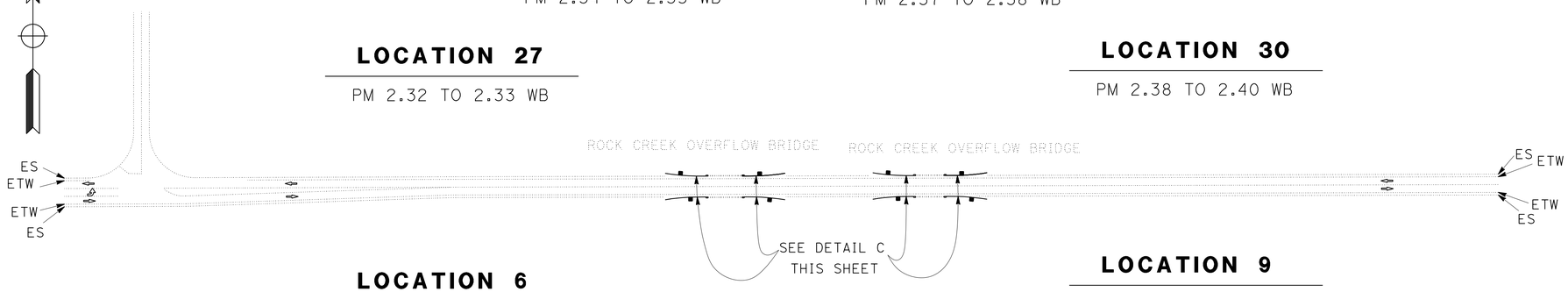

LOCATION 6

PM 2.32 TO 2.33 EB

LOCATION 9

PM 2.40 TO 2.41 EB

LOCATION 7

PM 2.34 TO 2.35 EB

LOCATION 8

PM 2.38 TO 2.39 EB

CONSTRUCTION DETAILS
ROUTE 32 (But)

NO SCALE

C-2

STATE OF CALIFORNIA - DEPARTMENT OF TRANSPORTATION
Caltrans®
TRAFFIC

FUNCTIONAL SUPERVISOR: STEPHEN WRIGHT

CALCULATED-DESIGNED BY: AL G. CHIN
CHECKED BY: ERIC SOUZA

REVISED BY | DATE REVISED

LAST REVISION 11-12-13 | DATE PLOTTED => 29-MAY-2014 | TIME PLOTTED => 08:42

BORDER LAST REVISED 7/2/2010 | USERNAME => s130875 | DGN FILE => 0300020450ga002.dgn | RELATIVE BORDER SCALE IS IN INCHES 0 1 2 3 | UNIT 0399 | PROJECT NUMBER & PHASE 03000204501

Dist	COUNTY	ROUTE	POST MILES TOTAL PROJECT	SHEET No.	TOTAL SHEETS
03	But,Col,Gln Sut,Yol,Yub	16,32,45 70,113,162	Var	20	195

REGISTERED CIVIL ENGINEER — DATE 2-10-14

PLANS APPROVAL DATE 2-10-14

REGISTERED PROFESSIONAL ENGINEER — ERIC NORMAN SOUZA No. 75706 Exp.06-30-14 CIVIL — STATE OF CALIFORNIA

THE STATE OF CALIFORNIA OR ITS OFFICERS OR AGENTS SHALL NOT BE RESPONSIBLE FOR THE ACCURACY OR COMPLETENESS OF SCANNED COPIES OF THIS PLAN SHEET.

NOTE:

1. FOR ACCURATE RIGHT OF WAY DATA, CONTACT RIGHT OF WAY ENGINEERING AT THE DISTRICT OFFICE.
2. EXISTING UTILITY FACILITIES HAVE NOT BEEN PLOTTED ON THESE PLANS.

LOCATION 36

PM 30.25 TO 30.36 WB

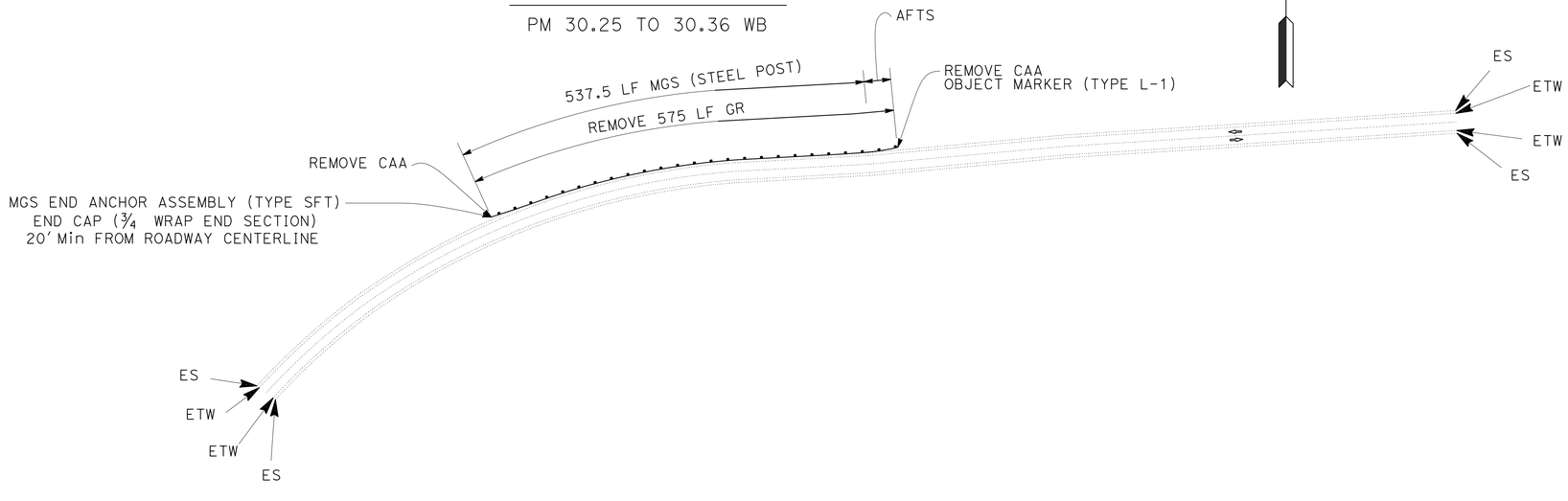

LOCATION 35

PM R23.60 TO R23.66 WB

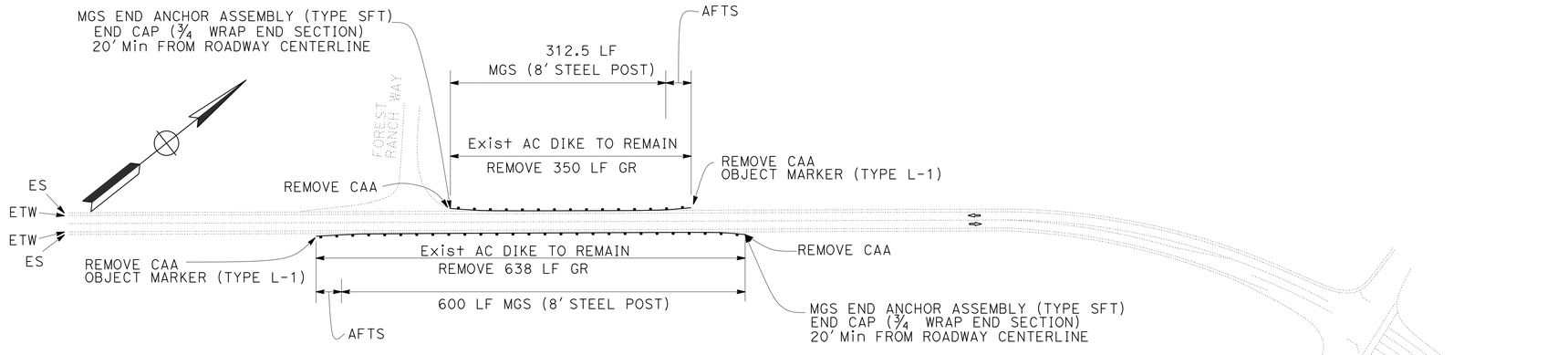

LOCATION 14

PM R23.59 TO R23.71 EB

CONSTRUCTION DETAILS

ROUTE 32 (But)

NO SCALE

C-3

STATE OF CALIFORNIA - DEPARTMENT OF TRANSPORTATION — TRAFFIC

FUNCTIONAL SUPERVISOR: STEPHEN WRIGHT

CALCULATED-DESIGNED BY: AL G. CHIN

CHECKED BY: ERIC SOUZA

REVISED BY | DATE REVISED

LAST REVISION 11-12-13 | DATE PLOTTED => 29-MAY-2014 | TIME PLOTTED => 08:42

BORDER LAST REVISED 7/2/2010 | USERNAME => s130875 | DGN FILE => 0300020450ga003.dgn | RELATIVE BORDER SCALE IS IN INCHES 0 1 2 3 | UNIT 0399 | PROJECT NUMBER & PHASE 03000204501

Dist	COUNTY	ROUTE	POST MILES TOTAL PROJECT	SHEET No.	TOTAL SHEETS
03	But,Col,Gln Sut,Yol,Yub	16,32,45 70,113,162	Var	21	195

REGISTERED CIVIL ENGINEER — DATE 2-10-14

PLANS APPROVAL DATE 2-10-14

REGISTERED PROFESSIONAL ENGINEER — ERIC NORMAN SOUZA No. 75706 Exp. 06-30-14 CIVIL — STATE OF CALIFORNIA

THE STATE OF CALIFORNIA OR ITS OFFICERS OR AGENTS SHALL NOT BE RESPONSIBLE FOR THE ACCURACY OR COMPLETENESS OF SCANNED COPIES OF THIS PLAN SHEET.

NOTE:

1. FOR ACCURATE RIGHT OF WAY DATA, CONTACT RIGHT OF WAY ENGINEERING AT THE DISTRICT OFFICE.
2. EXISTING UTILITY FACILITIES HAVE NOT BEEN PLOTTED ON THESE PLANS.

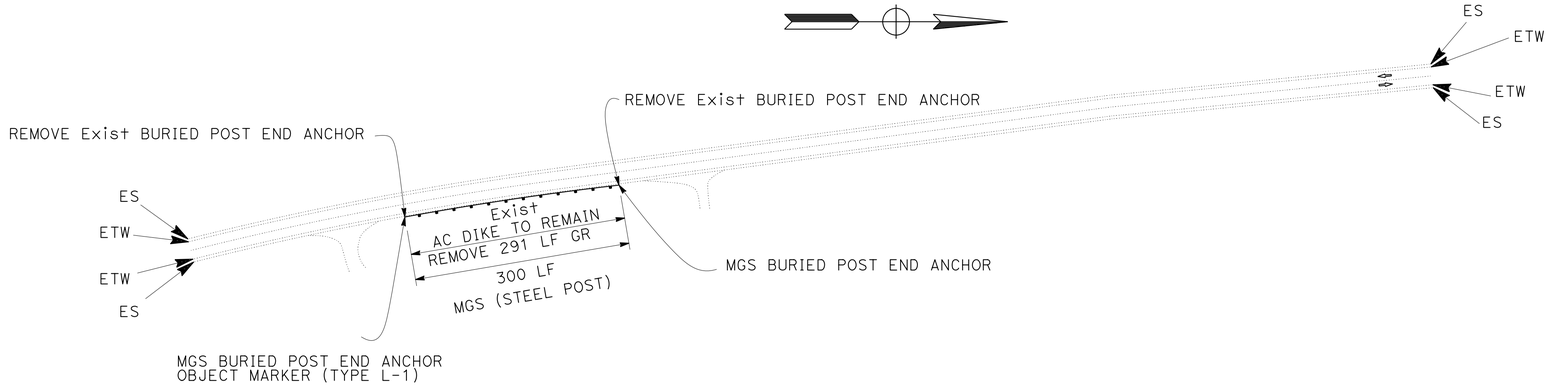

LOCATION 17

PM 31.15 TO 31.20 EB

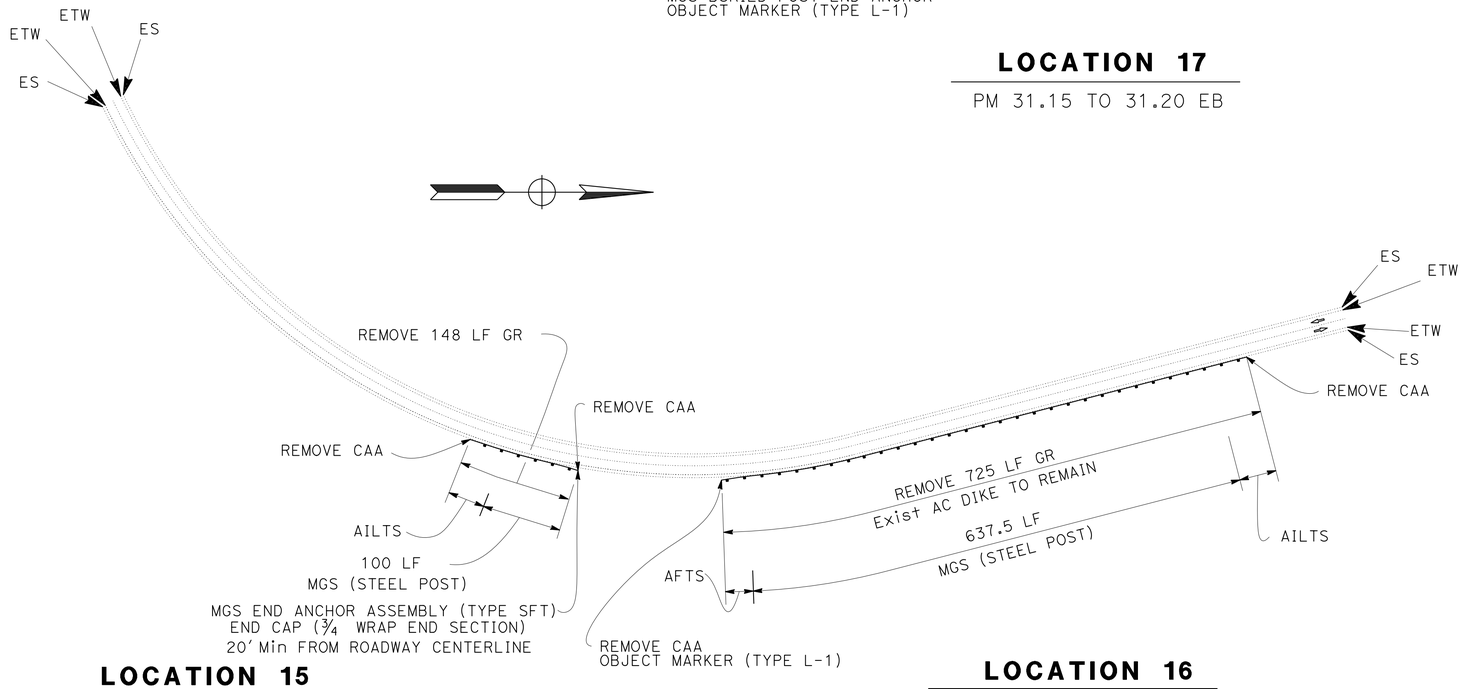

LOCATION 15

PM 30.87 TO 30.90 EB

LOCATION 16

PM 30.93 TO 31.06 EB

CONSTRUCTION DETAILS

ROUTE 32 (But)

NO SCALE

C-4

LAST REVISION 11-12-13 | DATE PLOTTED => 29-MAY-2014 | TIME PLOTTED => 08:42

STATE OF CALIFORNIA - DEPARTMENT OF TRANSPORTATION — Caltrans® TRAFFIC

FUNCTIONAL SUPERVISOR: STEPHEN WRIGHT

CALCULATED-DESIGNED BY: AL G. CHIN

CHECKED BY: ERIC SOUZA

REVISED BY | DATE REVISED

BORDER LAST REVISED 7/2/2010

USERNAME => s130875
DGN FILE => 0300020450ga004.dgn

RELATIVE BORDER SCALE IS IN INCHES 0 1 2 3

UNIT 0399

PROJECT NUMBER & PHASE 03000204501

Dist	COUNTY	ROUTE	POST MILES TOTAL PROJECT	SHEET No.	TOTAL SHEETS
03	But,Col,Gln Sut,Yol,Yub	16,32,45 70,113,162	Var	22	195

REGISTERED CIVIL ENGINEER — DATE 2-10-14

PLANS APPROVAL DATE 2-10-14

REGISTERED PROFESSIONAL ENGINEER — ERIC NORMAN SOUZA — No. 75706 — Exp. 06-30-14 — CIVIL — STATE OF CALIFORNIA

THE STATE OF CALIFORNIA OR ITS OFFICERS OR AGENTS SHALL NOT BE RESPONSIBLE FOR THE ACCURACY OR COMPLETENESS OF SCANNED COPIES OF THIS PLAN SHEET.

NOTE:

1. FOR ACCURATE RIGHT OF WAY DATA, CONTACT RIGHT OF WAY ENGINEERING AT THE DISTRICT OFFICE.
2. EXISTING UTILITY FACILITIES HAVE NOT BEEN PLOTTED ON THESE PLANS.

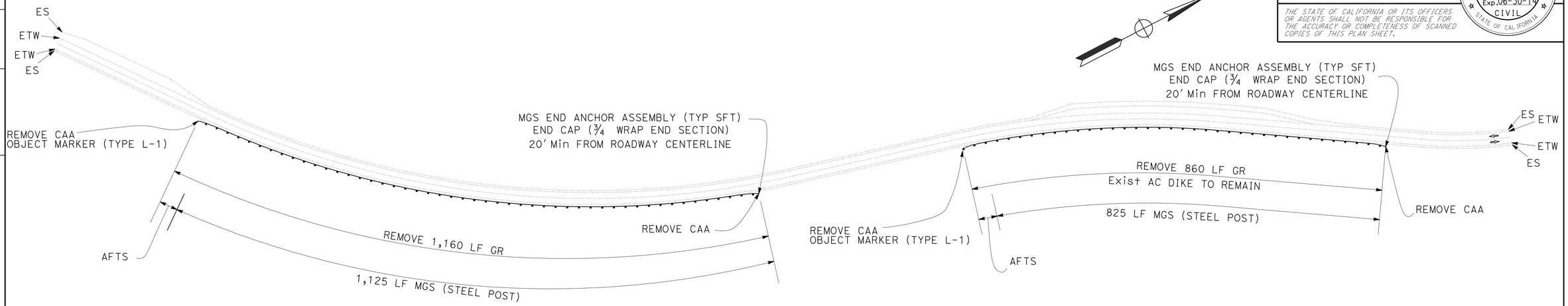

LOCATION 20

PM R36.44 TO R36.50 EB

LOCATION 21

PM R36.75 TO R36.80 EB

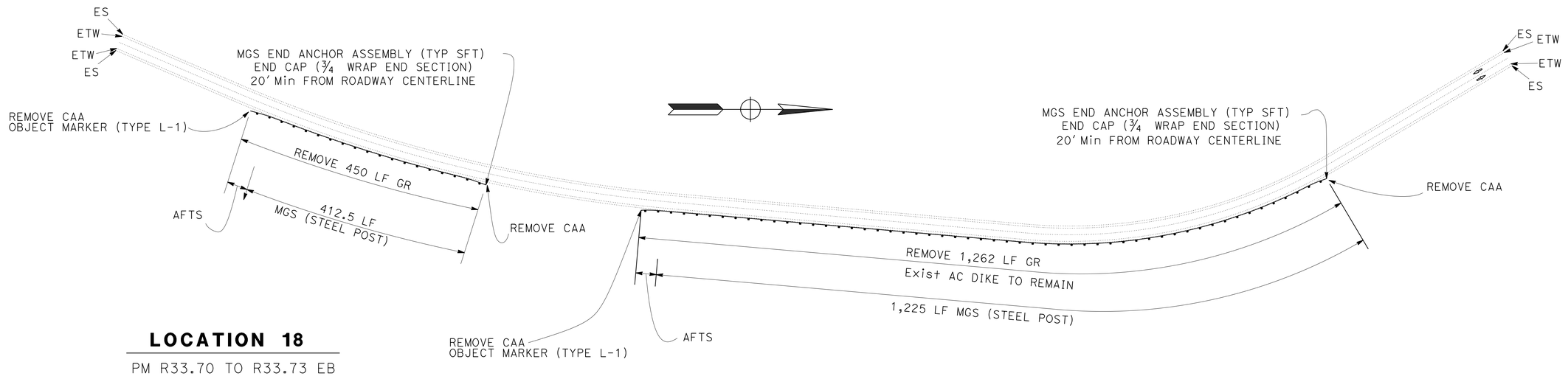

LOCATION 18

PM R33.70 TO R33.73 EB

LOCATION 19

PM R33.89 TO R34.13 EB

CONSTRUCTION DETAILS

ROUTE 32 (But)

NO SCALE

C-5

STATE OF CALIFORNIA - DEPARTMENT OF TRANSPORTATION
Caltrans®
TRAFFIC
FUNCTIONAL SUPERVISOR: STEPHEN WRIGHT
CALCULATED-DESIGNED BY: AL G. CHIN
CHECKED BY: ERIC SOUZA
REVISED BY
DATE REVISED

LAST REVISION 11-12-13
DATE PLOTTED => 29-MAY-2014
TIME PLOTTED => 08:42

BORDER LAST REVISED 7/2/2010
USERNAME => s130875
DGN FILE => 0300020450ga005.dgn
RELATIVE BORDER SCALE IS IN INCHES 0 1 2 3
UNIT 0399
PROJECT NUMBER & PHASE 03000204501

Dist	COUNTY	ROUTE	POST MILES TOTAL PROJECT	SHEET No.	TOTAL SHEETS
03	But,Col,Gln Sut,Yol,Yub	16,32,45 70,113,162	Var	23	195

REGISTERED CIVIL ENGINEER — 2-10-14 DATE

PLANS APPROVAL DATE — 2-10-14

REGISTERED PROFESSIONAL ENGINEER — ERIC NORMAN SOUZA No. 75706 Exp. 06-30-14 CIVIL — STATE OF CALIFORNIA

THE STATE OF CALIFORNIA OR ITS OFFICERS OR AGENTS SHALL NOT BE RESPONSIBLE FOR THE ACCURACY OR COMPLETENESS OF SCANNED COPIES OF THIS PLAN SHEET.

NOTE:

1. FOR ACCURATE RIGHT OF WAY DATA, CONTACT RIGHT OF WAY ENGINEERING AT THE DISTRICT OFFICE.
2. EXISTING UTILITY FACILITIES HAVE NOT BEEN PLOTTED ON THESE PLANS.

LOCATION 94

PM 18.40 TO 18.42 WB

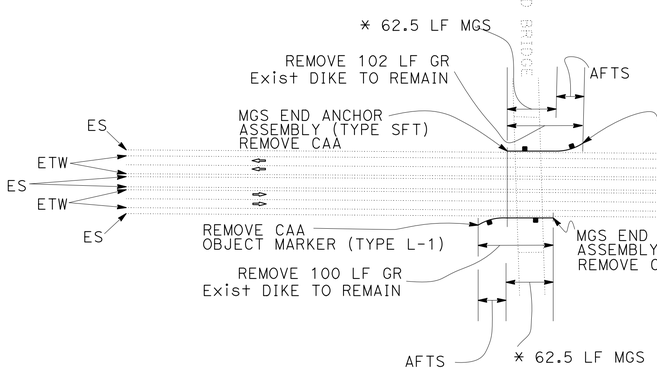

LOCATION 38

PM 18.39 TO 18.41 EB

LOCATION 95

PM 18.51 TO 18.52 WB

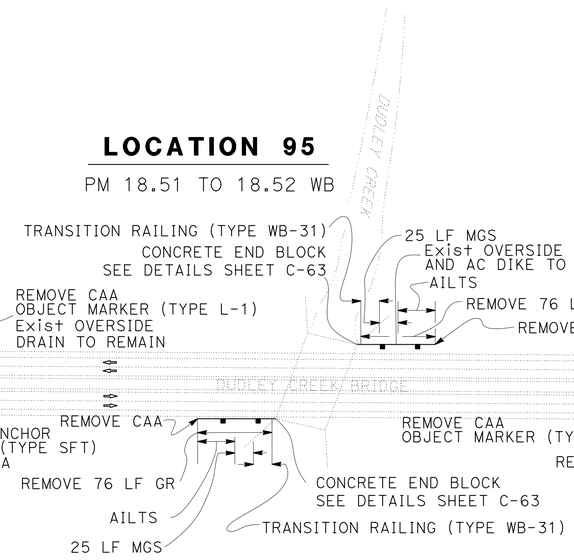

LOCATION 39

PM 18.48 TO 18.49 EB

LOCATION 96

PM 18.64 TO 18.66 WB

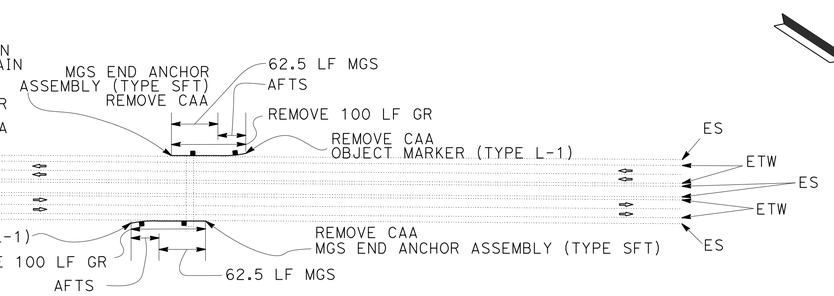

LOCATION 40

PM 18.63 TO 18.65 EB

* FOR STRENGTHENED MGS SECTIONS SEE STANDARD PLAN A77R3

LOCATION 93

PM 14.92 TO 14.94 WB

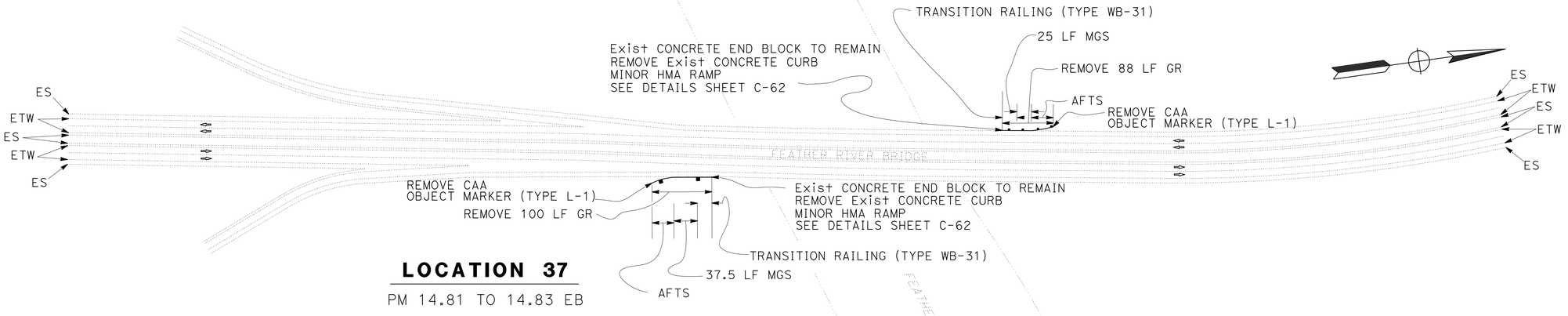

LOCATION 37

PM 14.81 TO 14.83 EB

CONSTRUCTION DETAILS
ROUTE 70 (But)
NO SCALE

C-6

STATE OF CALIFORNIA - DEPARTMENT OF TRANSPORTATION — TRAFFIC

FUNCTIONAL SUPERVISOR: STEPHEN WRIGHT

CALCULATED-DESIGNED BY: AL G. CHIN

CHECKED BY: ERIC SOUZA

REVISED BY / DATE REVISED

LAST REVISION 10-11-13 — DATE PLOTTED => 29-MAY-2014 TIME PLOTTED => 08:42

BORDER LAST REVISED 7/2/2010 | USERNAME => s130875 DGN FILE => 0300020450ga006.dgn | RELATIVE BORDER SCALE IS IN INCHES 0 1 2 3 | UNIT 0399 | PROJECT NUMBER & PHASE 03000204501

Dist	COUNTY	ROUTE	POST MILES TOTAL PROJECT	SHEET No.	TOTAL SHEETS
03	But,Col,Gln Sut,Yol,Yub	16,32,45 70,113,162	Var	24	195

REGISTERED CIVIL ENGINEER — 2-10-14 DATE

PLANS APPROVAL DATE — 2-10-14

REGISTERED PROFESSIONAL ENGINEER
ERIC NORMAN SOUZA
No. 75706
Exp. 06-30-14
CIVIL
STATE OF CALIFORNIA

THE STATE OF CALIFORNIA OR ITS OFFICERS OR AGENTS SHALL NOT BE RESPONSIBLE FOR THE ACCURACY OR COMPLETENESS OF SCANNED COPIES OF THIS PLAN SHEET.

NOTE:

1. FOR ACCURATE RIGHT OF WAY DATA, CONTACT RIGHT OF WAY ENGINEERING AT THE DISTRICT OFFICE.
2. EXISTING UTILITY FACILITIES HAVE NOT BEEN PLOTTED ON THESE PLANS.

LOCATION 99

PM 22.28 TO 22.46 WB

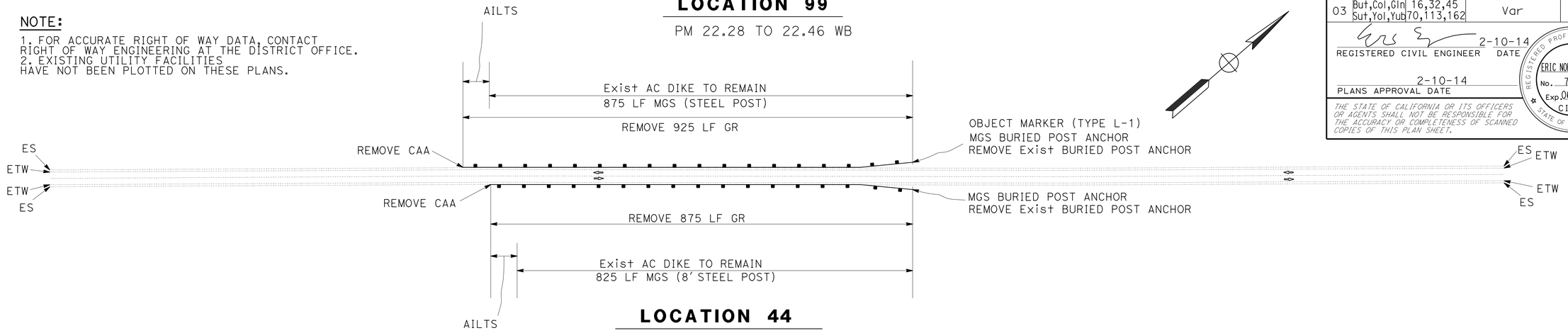

LOCATION 44

PM 22.28 TO 22.45 EB

LOCATION 98

PM 19.60 TO 19.62 WB

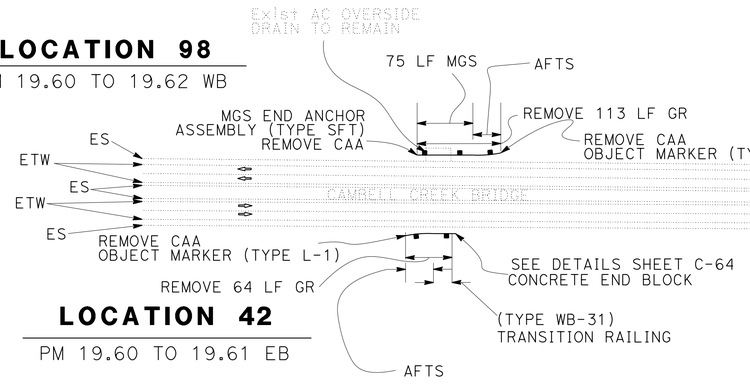

LOCATION 42

PM 19.60 TO 19.61 EB

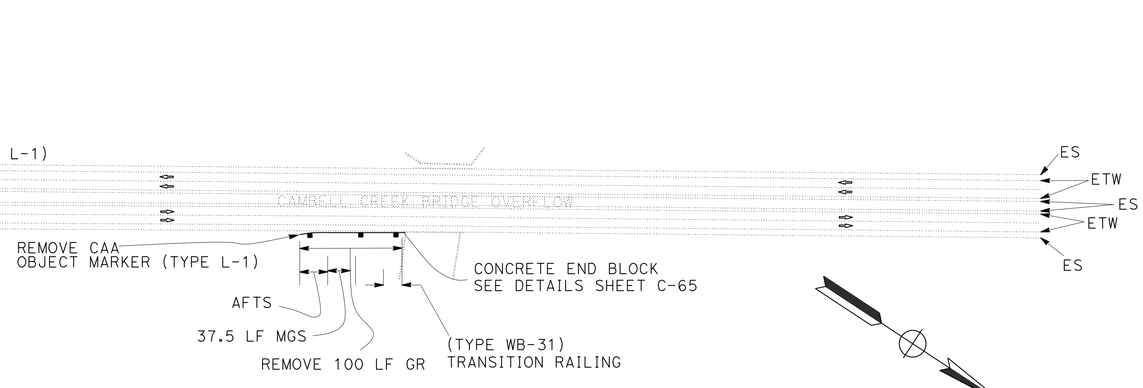

LOCATION 43

PM 19.78 TO 19.80 EB

LOCATION 97

PM 19.28 TO 19.30 WB

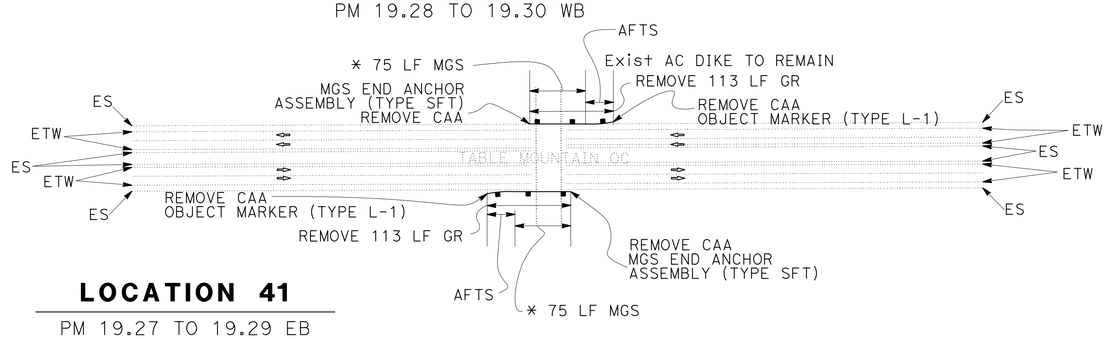

LOCATION 41

PM 19.27 TO 19.29 EB

* FOR STRENGTHENED MGS SECTIONS SEE STANDARD PLAN A77R3

CONSTRUCTION DETAILS
ROUTE 70 (But)
NO SCALE

C-7

REVISED BY	DATE REVISED

CALCULATED-DESIGNED BY: AL G. CHIN
CHECKED BY: ERIC SOUZA
FUNCTIONAL SUPERVISOR: STEPHEN WRIGHT

STATE OF CALIFORNIA - DEPARTMENT OF TRANSPORTATION
Caltrans®
TRAFFIC

LAST REVISION 10-11-13
DATE PLOTTED => 29-MAY-2014
TIME PLOTTED => 08:42

BORDER LAST REVISED 7/2/2010
USERNAME => s130875
DGN FILE => 0300020450ga007.dgn
RELATIVE BORDER SCALE IS IN INCHES 0 1 2 3
UNIT 0399
PROJECT NUMBER & PHASE 03000204501

Dist	COUNTY	ROUTE	POST MILES TOTAL PROJECT	SHEET No.	TOTAL SHEETS
03	But,Col,Gln Sut,Yol,Yub	16,32,45 70,113,162	Var	25	195

REGISTERED CIVIL ENGINEER — 2-10-14 DATE

ERIC NORMAN SOUZA No. 75706 Exp. 06-30-14 CIVIL — REGISTERED PROFESSIONAL ENGINEER — STATE OF CALIFORNIA

2-10-14
PLANS APPROVAL DATE

THE STATE OF CALIFORNIA OR ITS OFFICERS OR AGENTS SHALL NOT BE RESPONSIBLE FOR THE ACCURACY OR COMPLETENESS OF SCANNED COPIES OF THIS PLAN SHEET.

NOTE:

1. FOR ACCURATE RIGHT OF WAY DATA, CONTACT RIGHT OF WAY ENGINEERING AT THE DISTRICT OFFICE.
2. EXISTING UTILITY FACILITIES HAVE NOT BEEN PLOTTED ON THESE PLANS.

LOCATION 102

PM 24.47 TO 24.69 WB

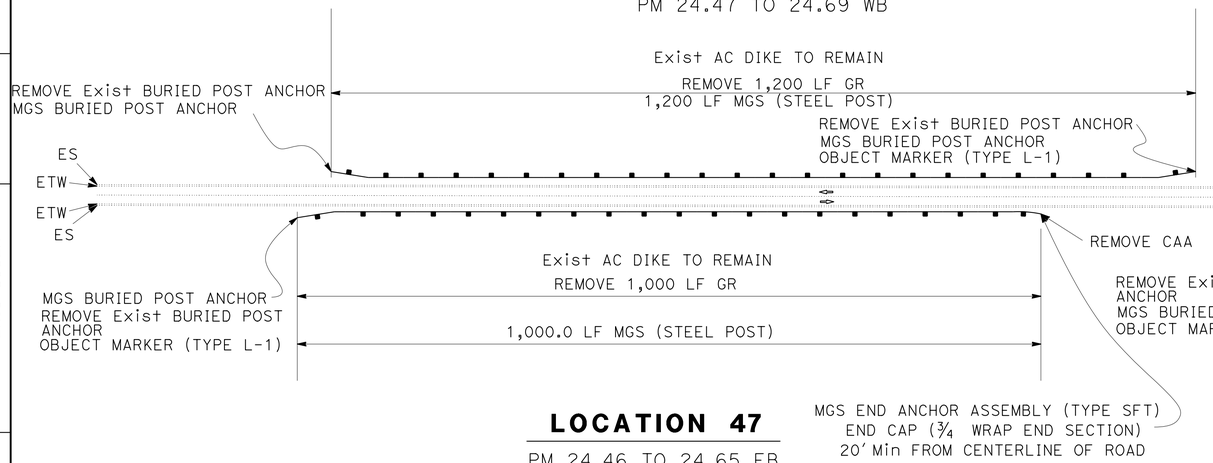

LOCATION 47

PM 24.46 TO 24.65 EB

LOCATION 103

PM 24.74 TO 24.94 WB

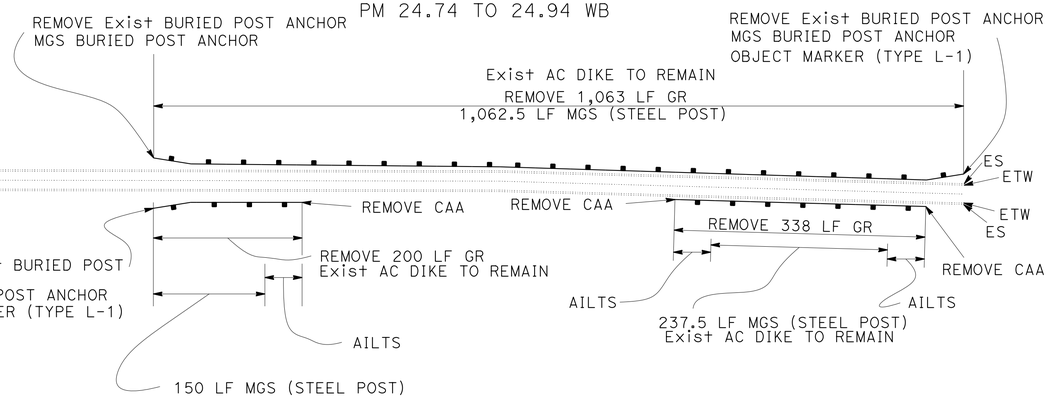

LOCATION 48

PM 24.74 TO 24.78 EB

LOCATION 49

PM 24.85 TO 24.92 EB

LOCATION 100

PM 23.09 TO 23.22 WB

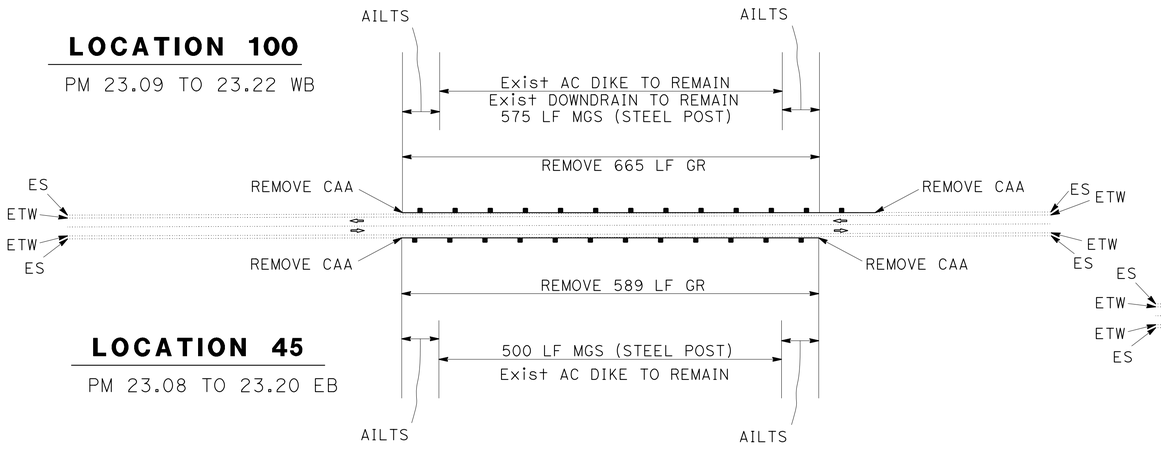

LOCATION 45

PM 23.08 TO 23.20 EB

LOCATION 101

PM 23.76 TO 23.80 WB

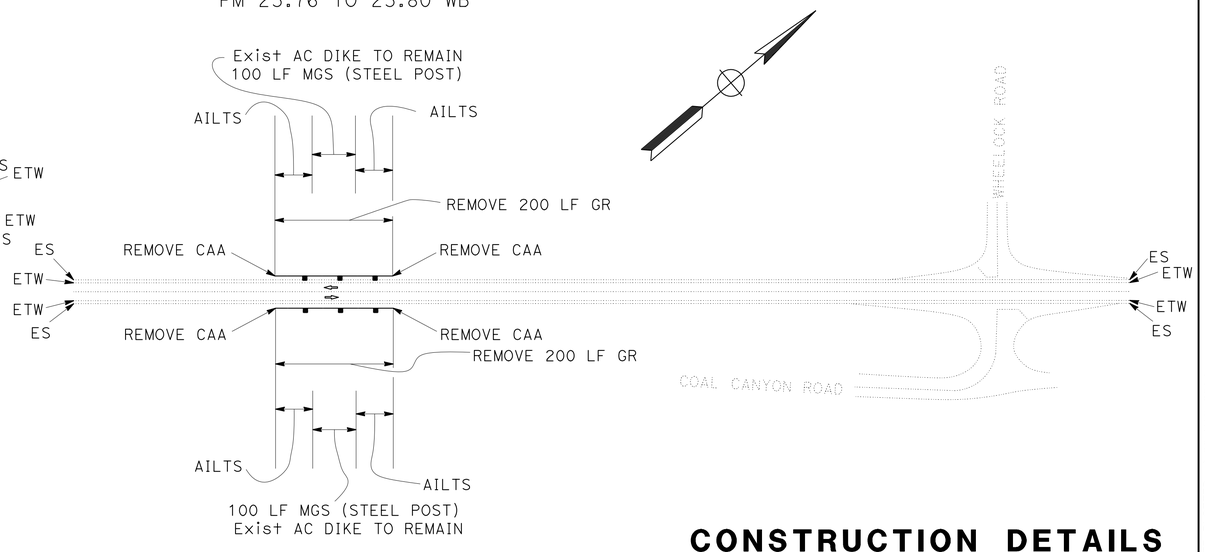

LOCATION 46

PM 23.76 TO 23.80 EB

CONSTRUCTION DETAILS

ROUTE 70 (But)

NO SCALE

C-8

REVISED BY | DATE REVISED
AL G. CHIN | ERIC SOUZA
CALCULATED-DESIGNED BY | CHECKED BY
FUNCTIONAL SUPERVISOR: STEPHEN WRIGHT
STATE OF CALIFORNIA - DEPARTMENT OF TRANSPORTATION
TRAFFIC

LAST REVISION 11-12-13 | DATE PLOTTED => 29-MAY-2014 | TIME PLOTTED => 08:42

BORDER LAST REVISED 7/2/2010 | USERNAME => s130875 | DGN FILE => 0300020450ga008.dgn | RELATIVE BORDER SCALE IS IN INCHES 0 1 2 3 | UNIT 0399 | PROJECT NUMBER & PHASE 03000204501

Dist	COUNTY	ROUTE	POST MILES TOTAL PROJECT	SHEET No.	TOTAL SHEETS
03	But,Col,Gln Sut,Yol,Yub	16,32,45 70,113,162	Var	26	195

REGISTERED CIVIL ENGINEER — DATE 2-10-14

PLANS APPROVAL DATE 2-10-14

REGISTERED PROFESSIONAL ENGINEER — ERIC NORMAN SOUZA No. 75706 Exp.06-30-14 CIVIL — STATE OF CALIFORNIA

THE STATE OF CALIFORNIA OR ITS OFFICERS OR AGENTS SHALL NOT BE RESPONSIBLE FOR THE ACCURACY OR COMPLETENESS OF SCANNED COPIES OF THIS PLAN SHEET.

NOTE:

1. FOR ACCURATE RIGHT OF WAY DATA, CONTACT RIGHT OF WAY ENGINEERING AT THE DISTRICT OFFICE.
2. EXISTING UTILITY FACILITIES HAVE NOT BEEN PLOTTED ON THESE PLANS.

LOCATION 106

PM 25.49 TO 25.56 WB

LOCATION 107

PM 25.60 TO 25.69 WB

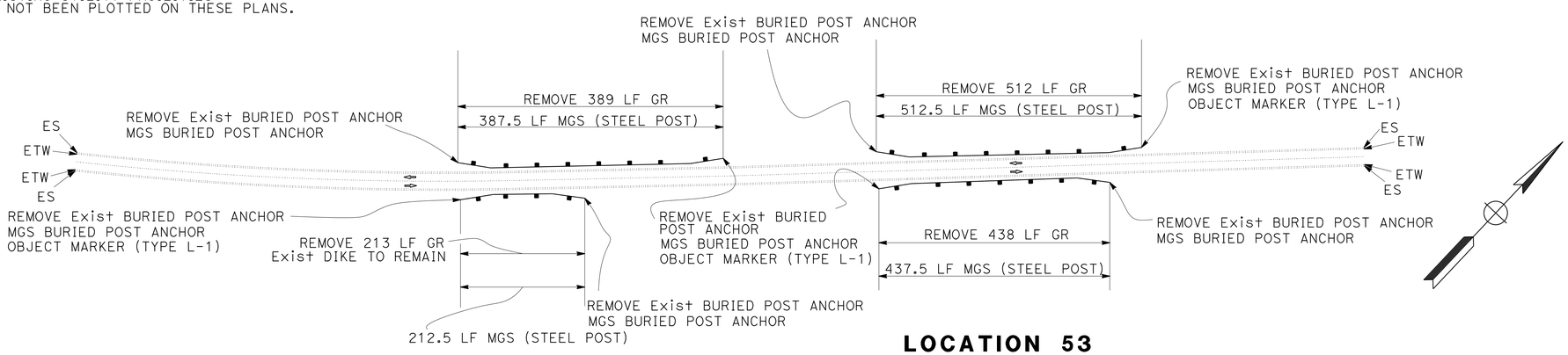

LOCATION 52

PM 25.48 TO 25.52 EB

LOCATION 53

PM 25.60 TO 25.68 EB

LOCATION 104

PM 25.05 TO 25.18 WB

LOCATION 105

PM 25.21 TO 25.37 WB

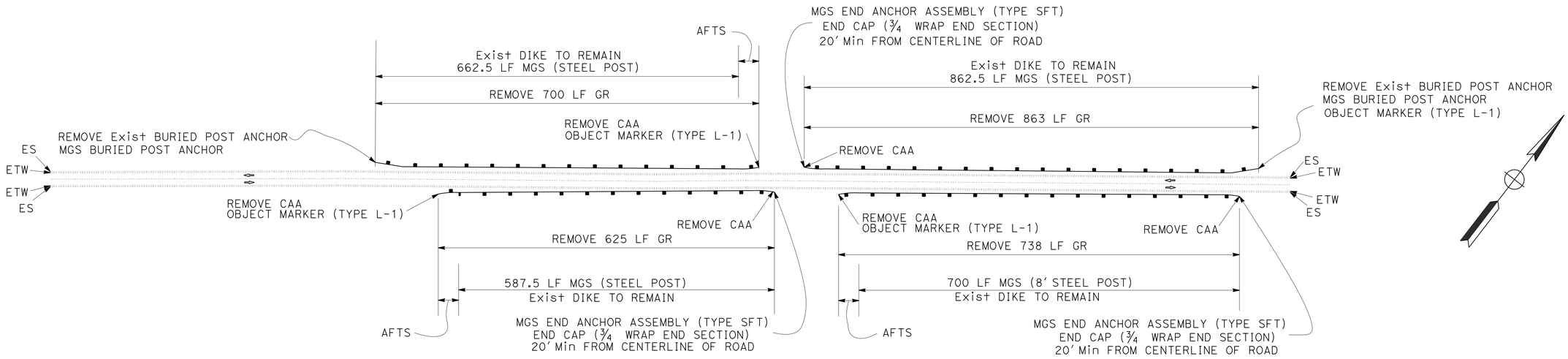

LOCATION 50

PM 25.07 TO 25.19 EB

LOCATION 51

PM 25.22 TO 25.36 EB

CONSTRUCTION DETAILS
ROUTE 70 (But)
NO SCALE

C-9

STATE OF CALIFORNIA - DEPARTMENT OF TRANSPORTATION
TRAFFIC
FUNCTIONAL SUPERVISOR: STEPHEN WRIGHT
CALCULATED-DESIGNED BY
CHECKED BY
AL G. CHIN
ERIC SOUZA
REVISED BY
DATE REVISED

LAST REVISION 11-12-13
DATE PLOTTED => 29-MAY-2014
TIME PLOTTED => 08:42

BORDER LAST REVISED 7/2/2010
USERNAME => s130875
DGN FILE => 0300020450ga009.dgn
RELATIVE BORDER SCALE IS IN INCHES 0 1 2 3
UNIT 0399
PROJECT NUMBER & PHASE 03000204501

Dist	COUNTY	ROUTE	POST MILES TOTAL PROJECT	SHEET No.	TOTAL SHEETS
03	But,Col,Gln Sut,Yol,Yub	16,32,45 70,113,162	Var	27	195

REGISTERED CIVIL ENGINEER 2-10-14 DATE

PLANS APPROVAL DATE 2-10-14

REGISTERED PROFESSIONAL ENGINEER ERIC NORMAN SOUZA No. 75706 Exp. 06-30-14 CIVIL STATE OF CALIFORNIA

THE STATE OF CALIFORNIA OR ITS OFFICERS OR AGENTS SHALL NOT BE RESPONSIBLE FOR THE ACCURACY OR COMPLETENESS OF SCANNED COPIES OF THIS PLAN SHEET.

NOTE:

1. FOR ACCURATE RIGHT OF WAY DATA, CONTACT RIGHT OF WAY ENGINEERING AT THE DISTRICT OFFICE.
2. EXISTING UTILITY FACILITIES HAVE NOT BEEN PLOTTED ON THESE PLANS.

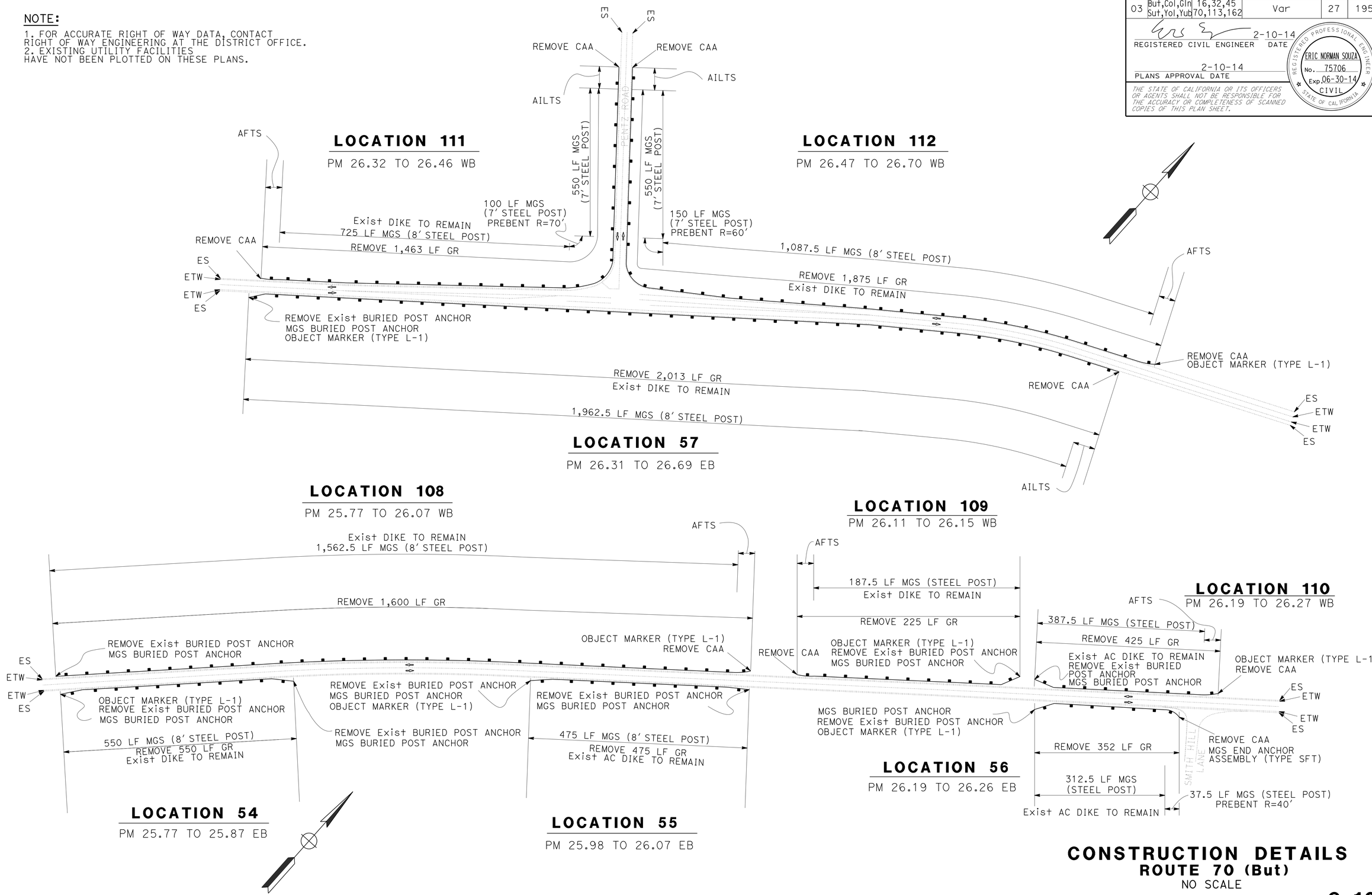

CONSTRUCTION DETAILS
ROUTE 70 (But)
NO SCALE

C-10

STATE OF CALIFORNIA - DEPARTMENT OF TRANSPORTATION
Caltrans
TRAFFIC

FUNCTIONAL SUPERVISOR: STEPHEN WRIGHT
CALCULATED-DESIGNED BY: AL G. CHIN
CHECKED BY: ERIC SOUZA
REVISED BY
DATE REVISED

LAST REVISION 10-11-13
DATE PLOTTED => 29-MAY-2014
TIME PLOTTED => 08:42

Dist	COUNTY	ROUTE	POST MILES TOTAL PROJECT	SHEET No.	TOTAL SHEETS
03	But,Col,Gln Sut,Yol,Yub	16,32,45 70,113,162	Var	28	195

REGISTERED CIVIL ENGINEER — 2-10-14 DATE

ERIC NORMAN SOUZA No. 75706 Exp. 06-30-14 CIVIL — REGISTERED PROFESSIONAL ENGINEER — STATE OF CALIFORNIA

2-10-14
PLANS APPROVAL DATE

THE STATE OF CALIFORNIA OR ITS OFFICERS OR AGENTS SHALL NOT BE RESPONSIBLE FOR THE ACCURACY OR COMPLETENESS OF SCANNED COPIES OF THIS PLAN SHEET.

NOTE:

1. FOR ACCURATE RIGHT OF WAY DATA, CONTACT RIGHT OF WAY ENGINEERING AT THE DISTRICT OFFICE.
2. EXISTING UTILITY FACILITIES HAVE NOT BEEN PLOTTED ON THESE PLANS.

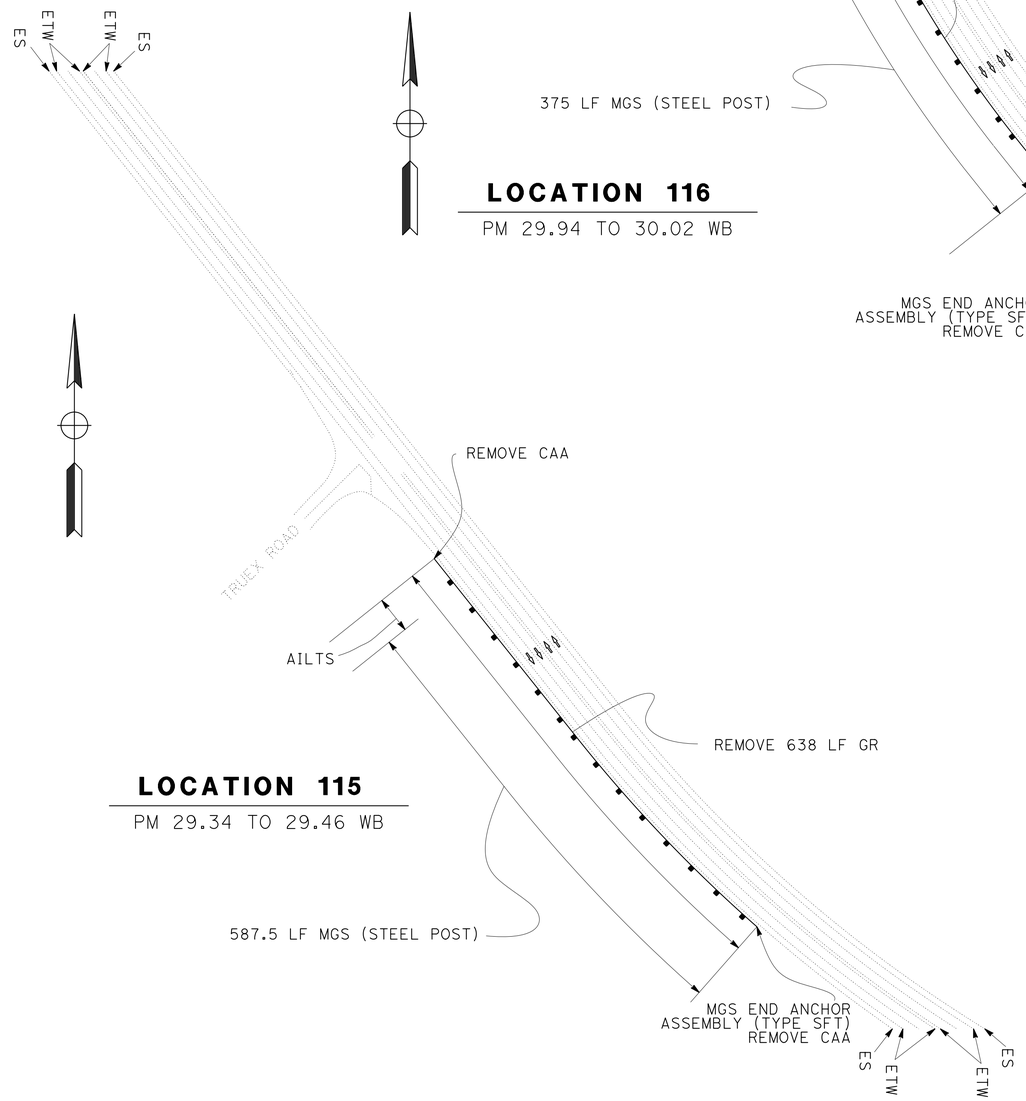

LOCATION 115
PM 29.34 TO 29.46 WB

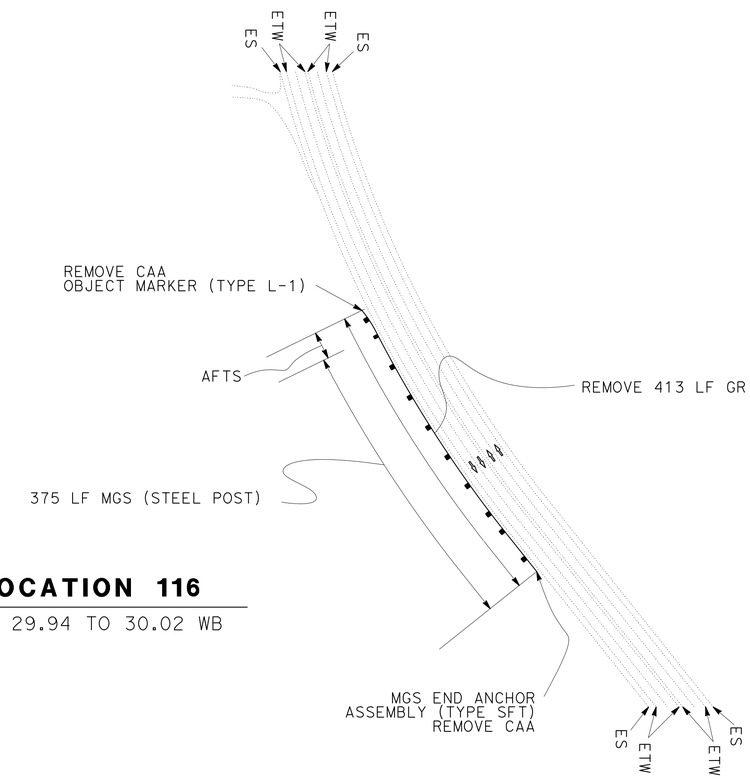

LOCATION 116
PM 29.94 TO 30.02 WB

LOCATION 117
PM 30.09 TO 30.28 WB

CONSTRUCTION DETAILS
ROUTE 70 (But)
NO SCALE

C-11

STATE OF CALIFORNIA - DEPARTMENT OF TRANSPORTATION — Caltrans® TRAFFIC

FUNCTIONAL SUPERVISOR: STEPHEN WRIGHT

CALCULATED-DESIGNED BY: AL G. CHIN

CHECKED BY: ERIC SOUZA

REVISED BY | DATE REVISED

LAST REVISION 10-11-13 | DATE PLOTTED => 29-MAY-2014 | TIME PLOTTED => 08:42

BORDER LAST REVISED 7/2/2010 | USERNAME => s130875 | DGN FILE => 0300020450ga011.dgn | RELATIVE BORDER SCALE IS IN INCHES 0 1 2 3 | UNIT 0399 | PROJECT NUMBER & PHASE 03000204501

Dist	COUNTY	ROUTE	POST MILES TOTAL PROJECT	SHEET No.	TOTAL SHEETS
03	But,Col,Gln Sut,Yol,Yub	16,32,45 70,113,162	Var	29	195

REGISTERED CIVIL ENGINEER — 2-10-14 DATE

PLANS APPROVAL DATE — 2-10-14

REGISTERED PROFESSIONAL ENGINEER — ERIC NORMAN SOUZA — No. 75706 — Exp. 06-30-14 — CIVIL — STATE OF CALIFORNIA

THE STATE OF CALIFORNIA OR ITS OFFICERS OR AGENTS SHALL NOT BE RESPONSIBLE FOR THE ACCURACY OR COMPLETENESS OF SCANNED COPIES OF THIS PLAN SHEET.

NOTE:

1. FOR ACCURATE RIGHT OF WAY DATA, CONTACT RIGHT OF WAY ENGINEERING AT THE DISTRICT OFFICE.
2. EXISTING UTILITY FACILITIES HAVE NOT BEEN PLOTTED ON THESE PLANS.

LOCATION 118

PM 30.37 TO 30.42 WB

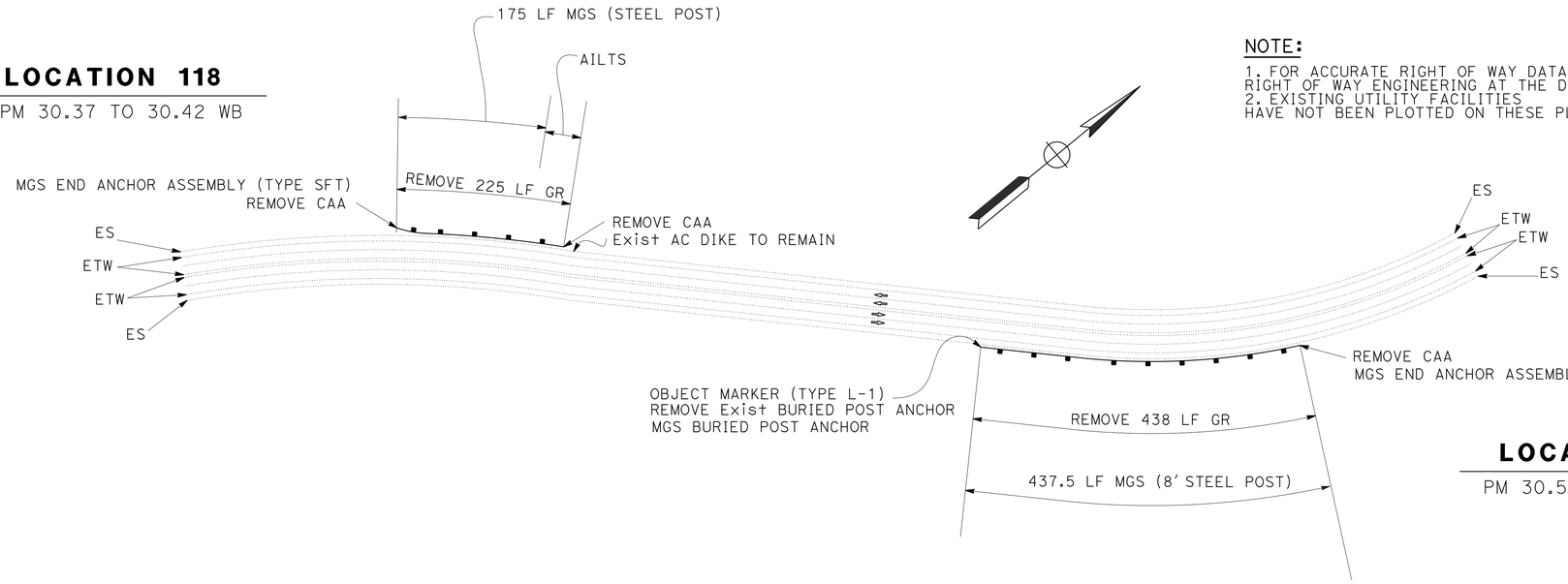

LOCATION 59

PM 30.55 TO 30.63 EB

LOCATION 119

PM 30.77 TO 30.83 WB

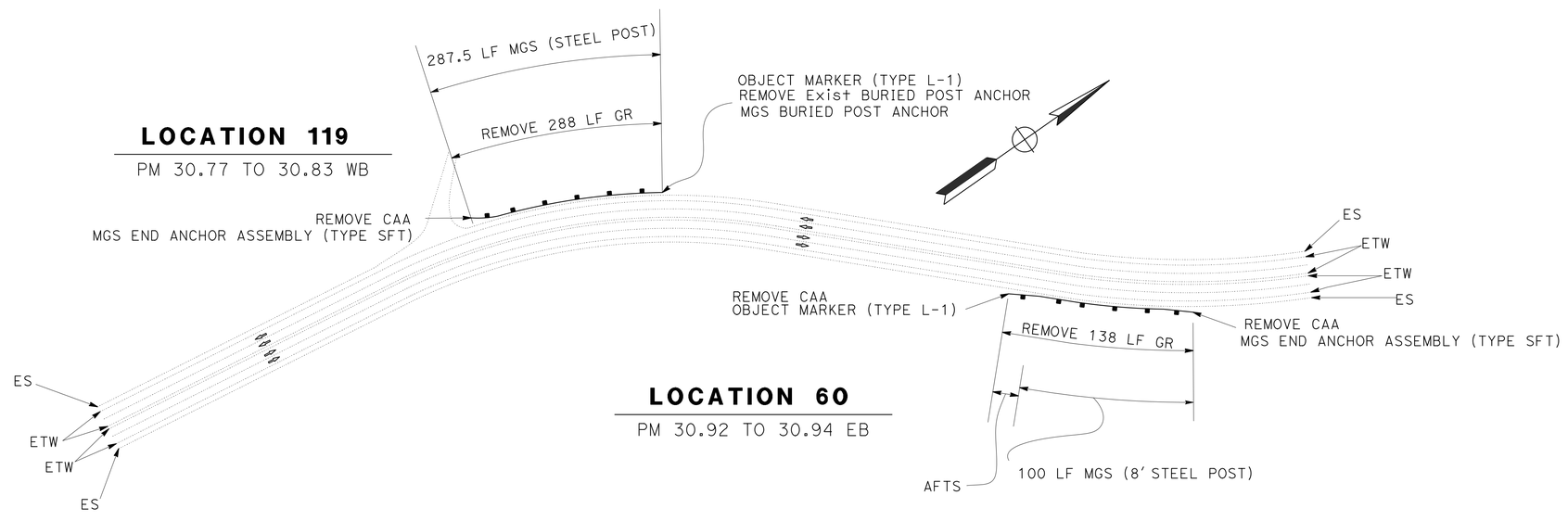

LOCATION 60

PM 30.92 TO 30.94 EB

CONSTRUCTION DETAILS

ROUTE 70 (But)

NO SCALE

C-12

REVISED BY	DATE REVISED
AL G. CHIN	ERIC SOUZA
CALCULATED-DESIGNED BY	CHECKED BY
FUNCTIONAL SUPERVISOR	STEPHEN WRIGHT

STATE OF CALIFORNIA - DEPARTMENT OF TRANSPORTATION — TRAFFIC

LAST REVISION 10-11-13 — DATE PLOTTED => 29-MAY-2014 — TIME PLOTTED => 08:42

BORDER LAST REVISED 7/2/2010 | USERNAME => s130875 | DGN FILE => 0300020450ga012.dgn | RELATIVE BORDER SCALE IS IN INCHES 0 1 2 3 | UNIT 0399 | PROJECT NUMBER & PHASE 03000204501

Dist	COUNTY	ROUTE	POST MILES TOTAL PROJECT	SHEET No.	TOTAL SHEETS
03	But,Col,Gln Sut,Yol,Yub	16,32,45 70,113,162	Var	30	195

REGISTERED CIVIL ENGINEER — 2-10-14 DATE

2-10-14
PLANS APPROVAL DATE

REGISTERED PROFESSIONAL ENGINEER — ERIC NORMAN SOUZA — No. 75706 — Exp. 06-30-14 — CIVIL — STATE OF CALIFORNIA

THE STATE OF CALIFORNIA OR ITS OFFICERS OR AGENTS SHALL NOT BE RESPONSIBLE FOR THE ACCURACY OR COMPLETENESS OF SCANNED COPIES OF THIS PLAN SHEET.

NOTE:

1. FOR ACCURATE RIGHT OF WAY DATA, CONTACT RIGHT OF WAY ENGINEERING AT THE DISTRICT OFFICE.
2. EXISTING UTILITY FACILITIES HAVE NOT BEEN PLOTTED ON THESE PLANS.

LOCATION 61

PM 30.98 TO 31.20 EB

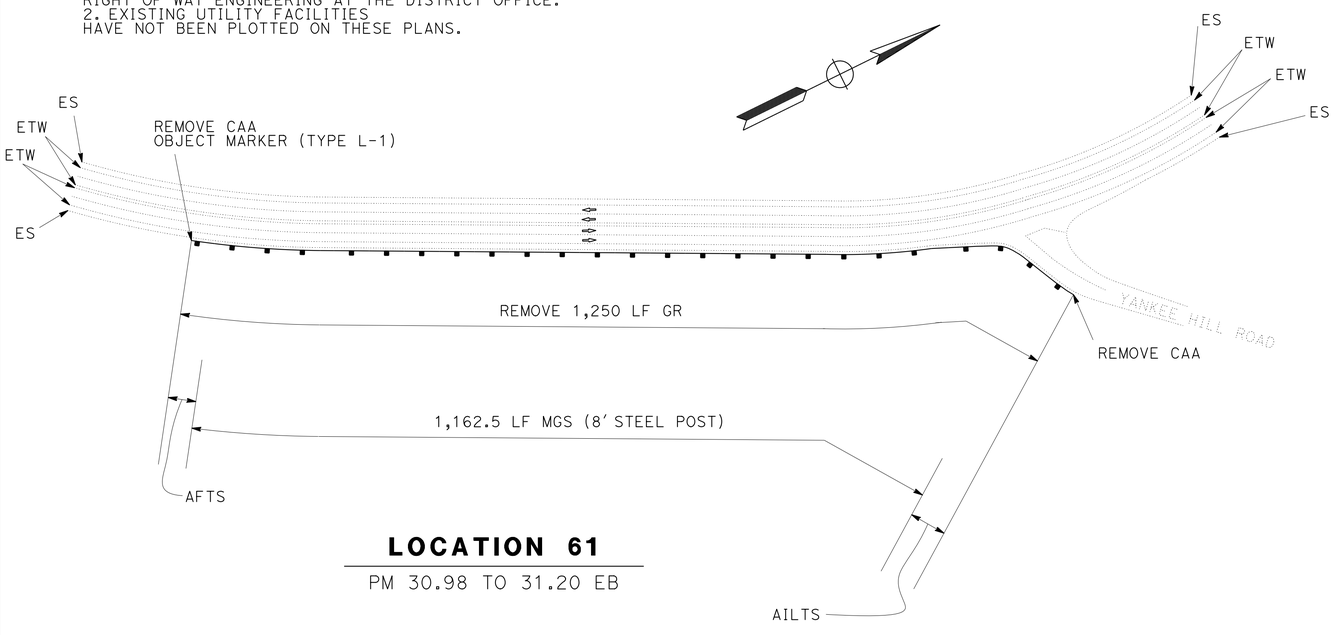

LOCATION 120

PM 31.36 TO 31.57 WB

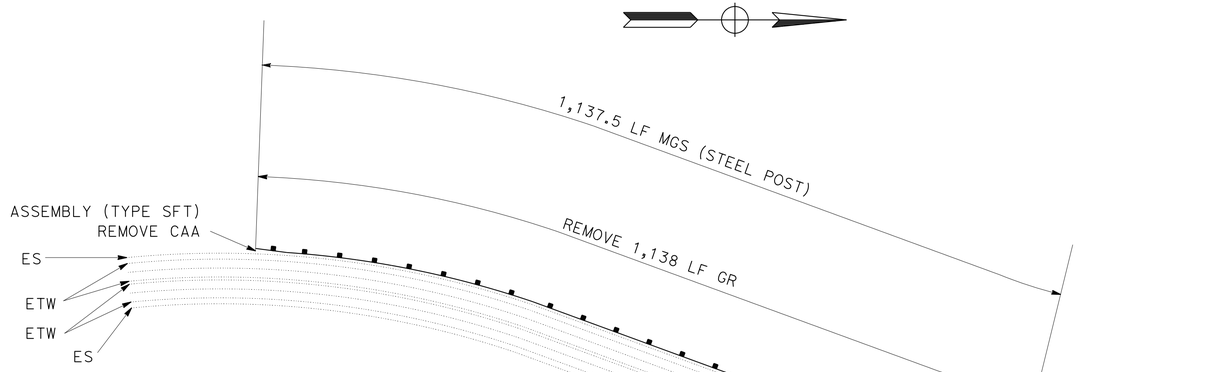

LOCATION 121

PM 31.62 TO 31.66 WB

LOCATION 122

PM 31.65 TO 32.00 WB

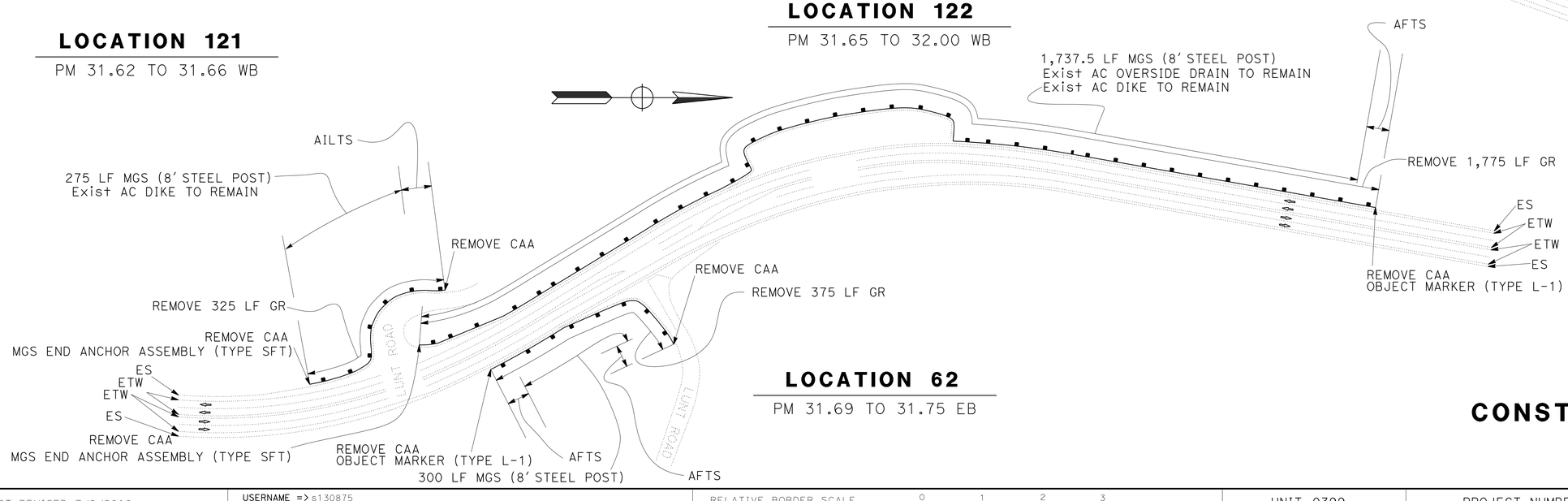

LOCATION 62

PM 31.69 TO 31.75 EB

CONSTRUCTION DETAILS
ROUTE 70 (But)
NO SCALE

C-13

STATE OF CALIFORNIA - DEPARTMENT OF TRANSPORTATION — TRAFFIC

FUNCTIONAL SUPERVISOR: STEPHEN WRIGHT

CALCULATED-DESIGNED BY: AL G. CHIN

CHECKED BY: ERIC SOUZA

REVISED BY | DATE REVISED

LAST REVISION 10-11-13 — DATE PLOTTED => 29-MAY-2014 — TIME PLOTTED => 08:42

BORDER LAST REVISED 7/2/2010

USERNAME => s130875
DGN FILE => 0300020450ga013.dgn

RELATIVE BORDER SCALE IS IN INCHES 0 1 2 3

UNIT 0399

PROJECT NUMBER & PHASE 03000204501

Dist	COUNTY	ROUTE	POST MILES TOTAL PROJECT	SHEET No.	TOTAL SHEETS
03	But,Col,Gln Sut,Yol,Yub	16,32,45 70,113,162	Var	31	195

REGISTERED CIVIL ENGINEER — DATE 2-10-14

PLANS APPROVAL DATE 2-10-14

REGISTERED PROFESSIONAL ENGINEER — ERIC NORMAN SOUZA No. 75706 Exp. 06-30-14 CIVIL — STATE OF CALIFORNIA

THE STATE OF CALIFORNIA OR ITS OFFICERS OR AGENTS SHALL NOT BE RESPONSIBLE FOR THE ACCURACY OR COMPLETENESS OF SCANNED COPIES OF THIS PLAN SHEET.

NOTE:

1. FOR ACCURATE RIGHT OF WAY DATA, CONTACT RIGHT OF WAY ENGINEERING AT THE DISTRICT OFFICE.
2. EXISTING UTILITY FACILITIES HAVE NOT BEEN PLOTTED ON THESE PLANS.

LOCATION 123

PM 32.16 TO 32.29 WB

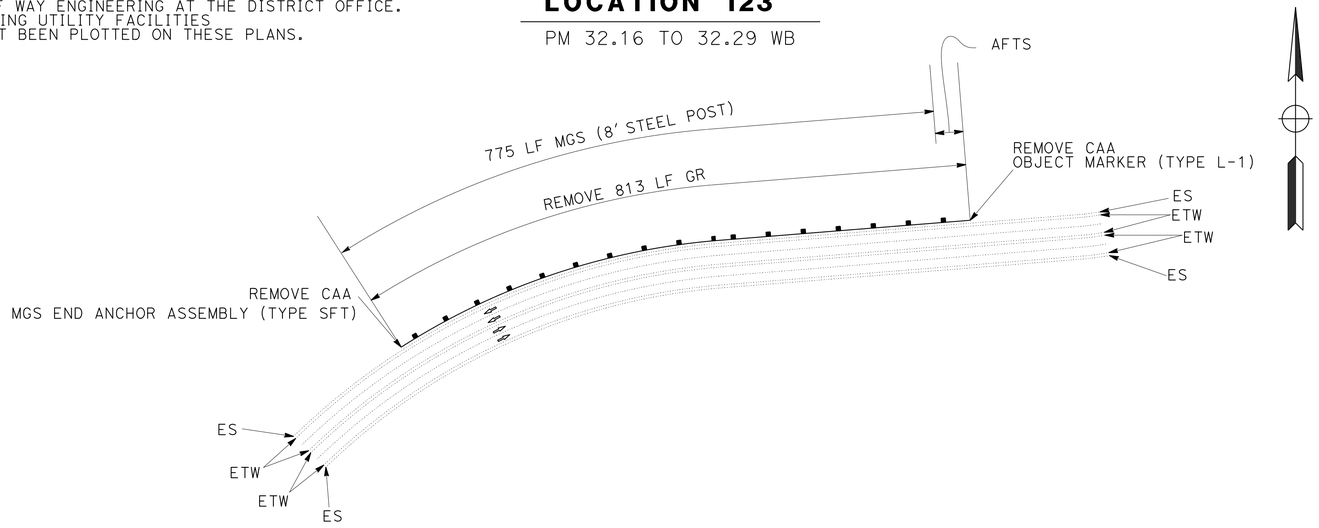

LOCATION 124

PM 32.67 TO 32.74 WB

LOCATION 125

PM 32.95 TO 33.07 WB

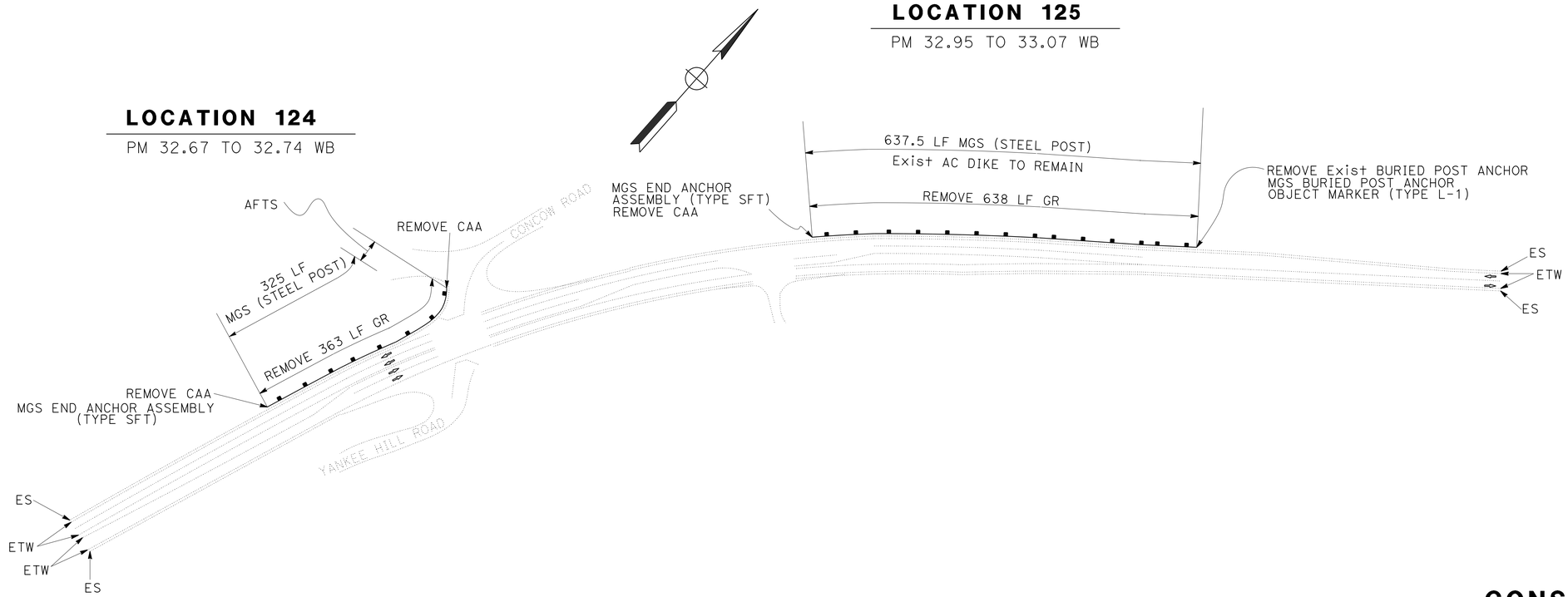

CONSTRUCTION DETAILS

ROUTE 70 (But)

NO SCALE

C-14

CALCULATED-DESIGNED BY	CHECKED BY	FUNCTIONAL SUPERVISOR	REVISED BY	DATE REVISED
AL G. CHIN	ERIC SOUZA	STEPHEN WRIGHT		

STATE OF CALIFORNIA - DEPARTMENT OF TRANSPORTATION — TRAFFIC

LAST REVISION 10-11-13 — DATE PLOTTED => 29-MAY-2014 — TIME PLOTTED => 08:42

BORDER LAST REVISED 7/2/2010 | USERNAME => s130875 | DGN FILE => 0300020450ga014.dgn | RELATIVE BORDER SCALE IS IN INCHES 0 1 2 3 | UNIT 0399 | PROJECT NUMBER & PHASE 03000204501

Dist	COUNTY	ROUTE	POST MILES TOTAL PROJECT	SHEET No.	TOTAL SHEETS
03	But,Col,Gln Sut,Yol,Yub	16,32,45 70,113,162	Var	32	195

REGISTERED CIVIL ENGINEER — 2-10-14 DATE

ERIC NORMAN SOUZA No. 75706 Exp.06-30-14 CIVIL — REGISTERED PROFESSIONAL ENGINEER — STATE OF CALIFORNIA

2-10-14
PLANS APPROVAL DATE

THE STATE OF CALIFORNIA OR ITS OFFICERS OR AGENTS SHALL NOT BE RESPONSIBLE FOR THE ACCURACY OR COMPLETENESS OF SCANNED COPIES OF THIS PLAN SHEET.

NOTE:

1. FOR ACCURATE RIGHT OF WAY DATA, CONTACT RIGHT OF WAY ENGINEERING AT THE DISTRICT OFFICE.
2. EXISTING UTILITY FACILITIES HAVE NOT BEEN PLOTTED ON THESE PLANS.

LOCATION 126
PM 34.38 TO 34.54 WB

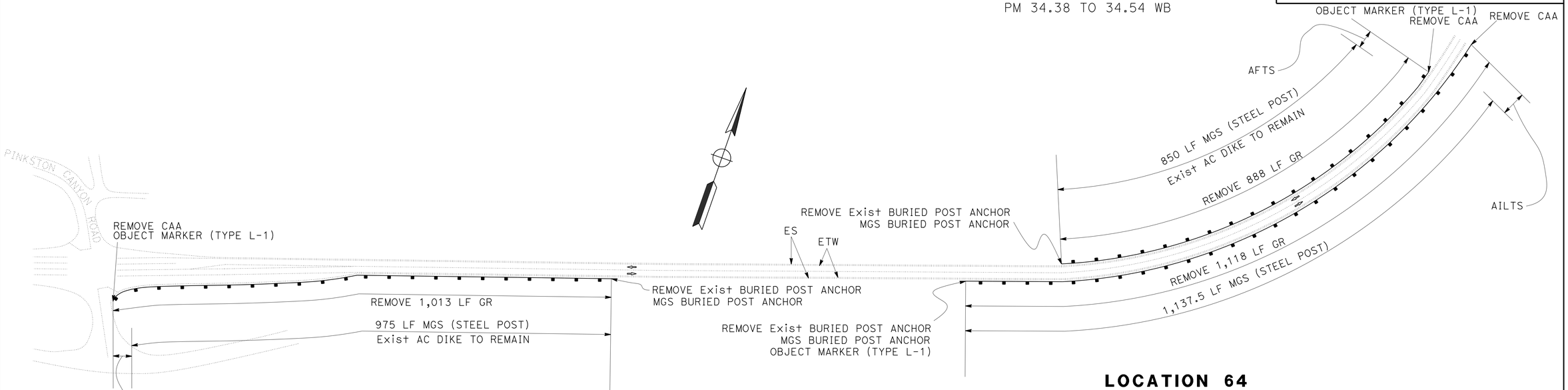

LOCATION 63
PM 34.02 TO 34.21 EB

LOCATION 64
PM 34.34 TO 34.56 EB

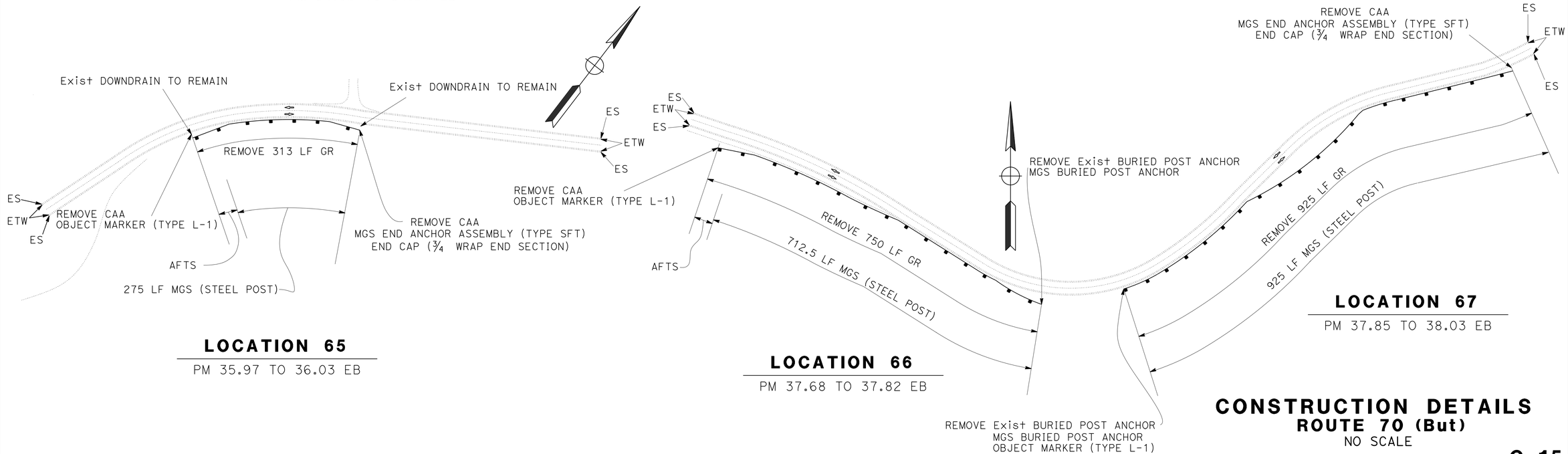

LOCATION 65
PM 35.97 TO 36.03 EB

LOCATION 66
PM 37.68 TO 37.82 EB

LOCATION 67
PM 37.85 TO 38.03 EB

CONSTRUCTION DETAILS
ROUTE 70 (But)
NO SCALE

C-15

STATE OF CALIFORNIA - DEPARTMENT OF TRANSPORTATION
Caltrans®
TRAFFIC
FUNCTIONAL SUPERVISOR: STEPHEN WRIGHT
CALCULATED-DESIGNED BY: AL G. CHIN
CHECKED BY: ERIC SOUZA
REVISED BY
DATE REVISED

LAST REVISION 11-12-13 DATE PLOTTED => 29-MAY-2014 TIME PLOTTED => 08:42

BORDER LAST REVISED 7/2/2010 | USERNAME => s130875 DGN FILE => 0300020450ga015.dgn | RELATIVE BORDER SCALE IS IN INCHES 0 1 2 3 | UNIT 0399 | PROJECT NUMBER & PHASE 03000204501

Dist	COUNTY	ROUTE	POST MILES TOTAL PROJECT	SHEET No.	TOTAL SHEETS
03	But,Col,Gln Sut,Yol,Yub	16,32,45 70,113,162	Var	33	195

2-10-14
REGISTERED CIVIL ENGINEER DATE

2-10-14
PLANS APPROVAL DATE

REGISTERED PROFESSIONAL ENGINEER
ERIC NORMAN SOUZA
No. 75706
Exp. 06-30-14
CIVIL
STATE OF CALIFORNIA

THE STATE OF CALIFORNIA OR ITS OFFICERS OR AGENTS SHALL NOT BE RESPONSIBLE FOR THE ACCURACY OR COMPLETENESS OF SCANNED COPIES OF THIS PLAN SHEET.

NOTE:

1. FOR ACCURATE RIGHT OF WAY DATA, CONTACT RIGHT OF WAY ENGINEERING AT THE DISTRICT OFFICE.
2. EXISTING UTILITY FACILITIES HAVE NOT BEEN PLOTTED ON THESE PLANS.

LOCATION 68

PM 38.06 TO 38.29 EB

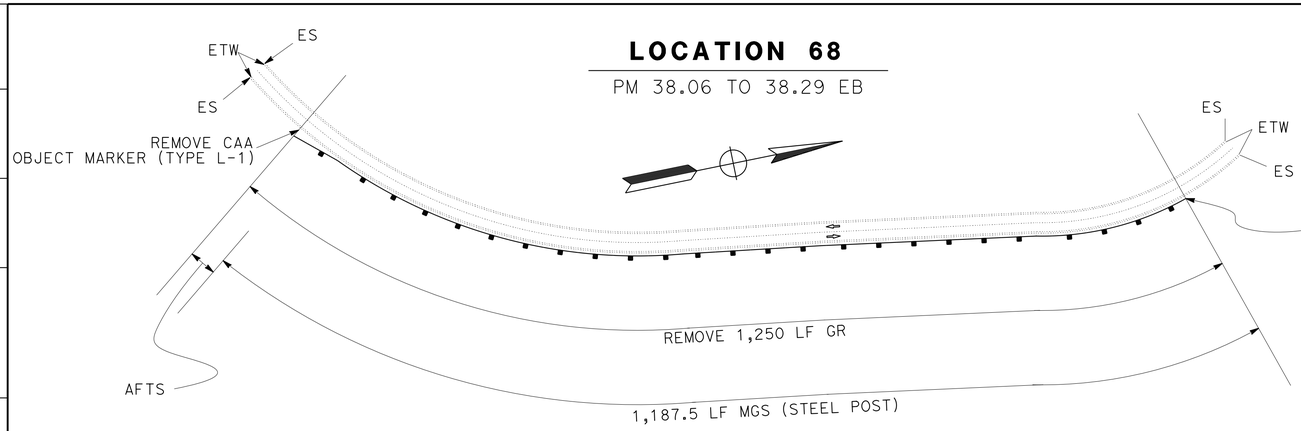

LOCATION 69

PM 38.81 TO 38.92 EB

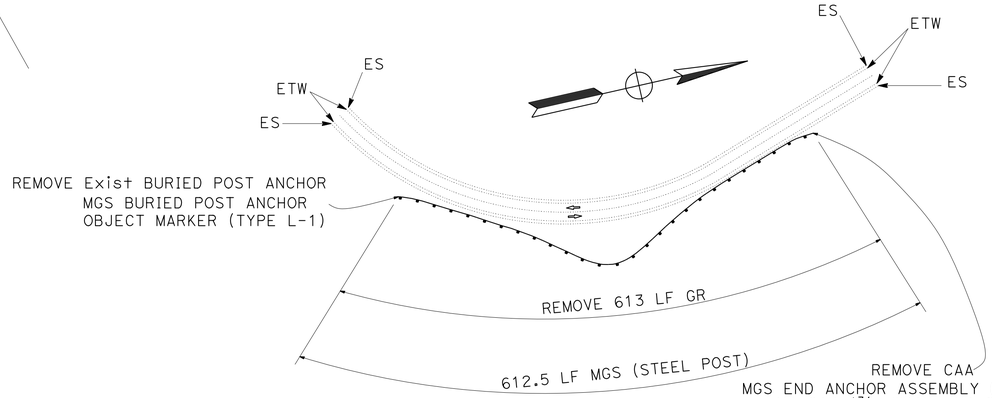

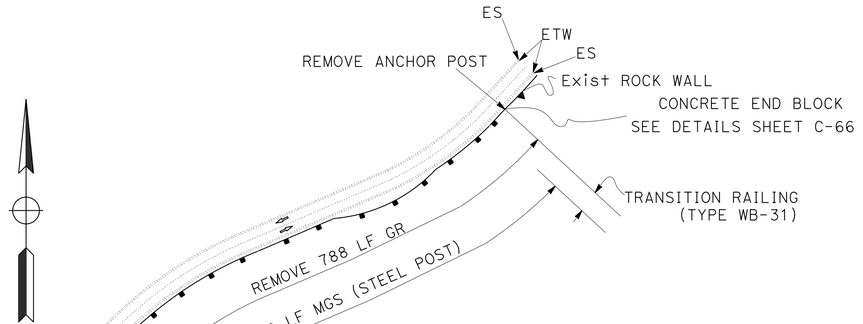

LOCATION 70

PM 39.16 TO 39.21 EB

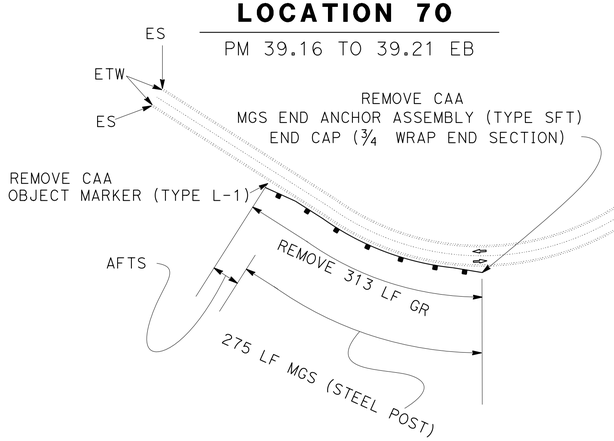

LOCATION 71

PM 39.33 TO 39.48 EB

CONSTRUCTION DETAILS
ROUTE 70 (But)
NO SCALE

C-16

LAST REVISION 11-12-13
DATE PLOTTED => 29-MAY-2014
TIME PLOTTED => 08:42

CALCULATED-DESIGNED BY
CHECKED BY
REVISED BY
DATE REVISED
AL G. CHIN
ERIC SOUZA
FUNCTIONAL SUPERVISOR
STEPHEN WRIGHT
STATE OF CALIFORNIA - DEPARTMENT OF TRANSPORTATION
Caltrans
TRAFFIC

BORDER LAST REVISED 7/2/2010
USERNAME => s130875
DGN FILE => 0300020450ga016.dgn
RELATIVE BORDER SCALE IS IN INCHES 0 1 2 3
UNIT 0399
PROJECT NUMBER & PHASE 03000204501

Dist	COUNTY	ROUTE	POST MILES TOTAL PROJECT	SHEET No.	TOTAL SHEETS
03	But,Col,Gln Sut,Yol,Yub	16,32,45 70,113,162	Var	34	195

REGISTERED CIVIL ENGINEER — DATE: 2-10-14

PLANS APPROVAL DATE: 2-10-14

ERIC NORMAN SOUZA No. 75706 Exp. 06-30-14 CIVIL — REGISTERED PROFESSIONAL ENGINEER — STATE OF CALIFORNIA

THE STATE OF CALIFORNIA OR ITS OFFICERS OR AGENTS SHALL NOT BE RESPONSIBLE FOR THE ACCURACY OR COMPLETENESS OF SCANNED COPIES OF THIS PLAN SHEET.

NOTE:

1. FOR ACCURATE RIGHT OF WAY DATA, CONTACT RIGHT OF WAY ENGINEERING AT THE DISTRICT OFFICE.
2. EXISTING UTILITY FACILITIES HAVE NOT BEEN PLOTTED ON THESE PLANS.

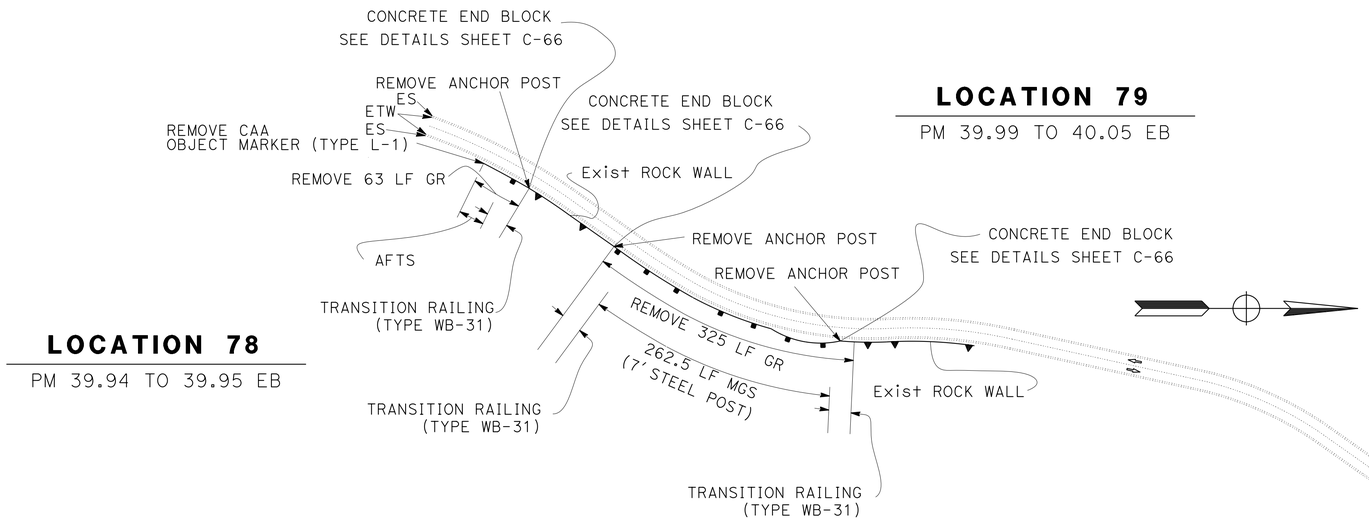

LOCATION 78

PM 39.94 TO 39.95 EB

LOCATION 79

PM 39.99 TO 40.05 EB

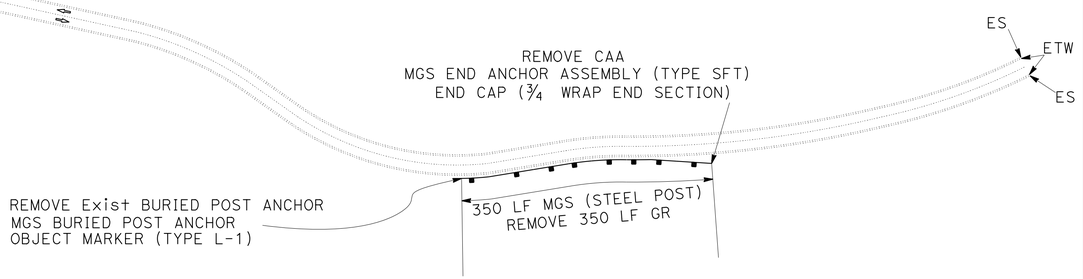

LOCATION 80

PM 40.22 TO 40.29 EB

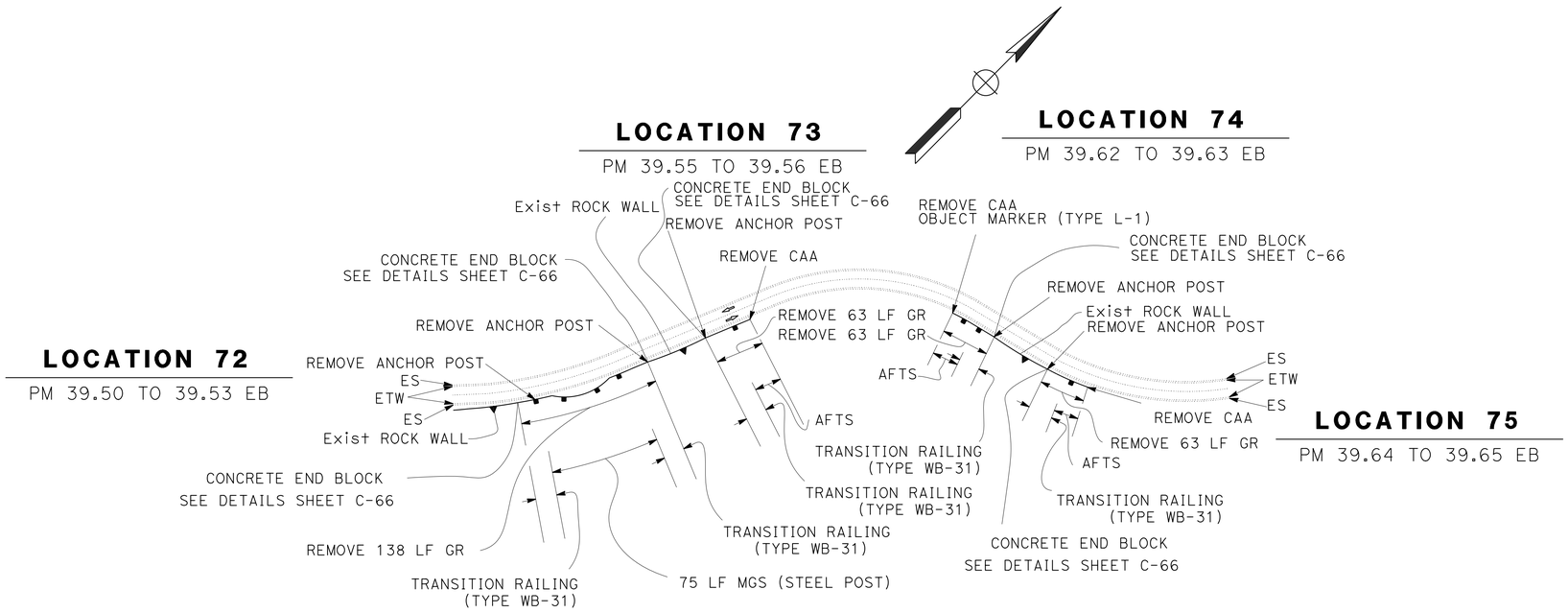

CONSTRUCTION DETAILS
ROUTE 70 (But)
NO SCALE

C-17

STATE OF CALIFORNIA - DEPARTMENT OF TRANSPORTATION
Caltrans®
TRAFFIC
FUNCTIONAL SUPERVISOR: STEPHEN WRIGHT
CALCULATED-DESIGNED BY: AL G. CHIN
CHECKED BY: ERIC SOUZA
REVISED BY
DATE REVISED

LAST REVISION 11-12-13 | DATE PLOTTED => 29-MAY-2014 | TIME PLOTTED => 08:42

BORDER LAST REVISED 7/2/2010 | USERNAME => s130875 | DGN FILE => 0300020450ga017.dgn | RELATIVE BORDER SCALE IS IN INCHES 0 1 2 3 | UNIT 0399 | PROJECT NUMBER & PHASE 03000204501

Dist	COUNTY	ROUTE	POST MILES TOTAL PROJECT	SHEET No.	TOTAL SHEETS
03	But,Col,Gln Sut,Yol,Yub	16,32,45 70,113,162	Var	35	195

REGISTERED CIVIL ENGINEER — 2-10-14 DATE

ERIC NORMAN SOUZA No. 75706 Exp. 06-30-14 CIVIL — REGISTERED PROFESSIONAL ENGINEER — STATE OF CALIFORNIA

2-10-14
PLANS APPROVAL DATE

THE STATE OF CALIFORNIA OR ITS OFFICERS OR AGENTS SHALL NOT BE RESPONSIBLE FOR THE ACCURACY OR COMPLETENESS OF SCANNED COPIES OF THIS PLAN SHEET.

NOTE:

1. FOR ACCURATE RIGHT OF WAY DATA, CONTACT RIGHT OF WAY ENGINEERING AT THE DISTRICT OFFICE.
2. EXISTING UTILITY FACILITIES HAVE NOT BEEN PLOTTED ON THIS PLANS.

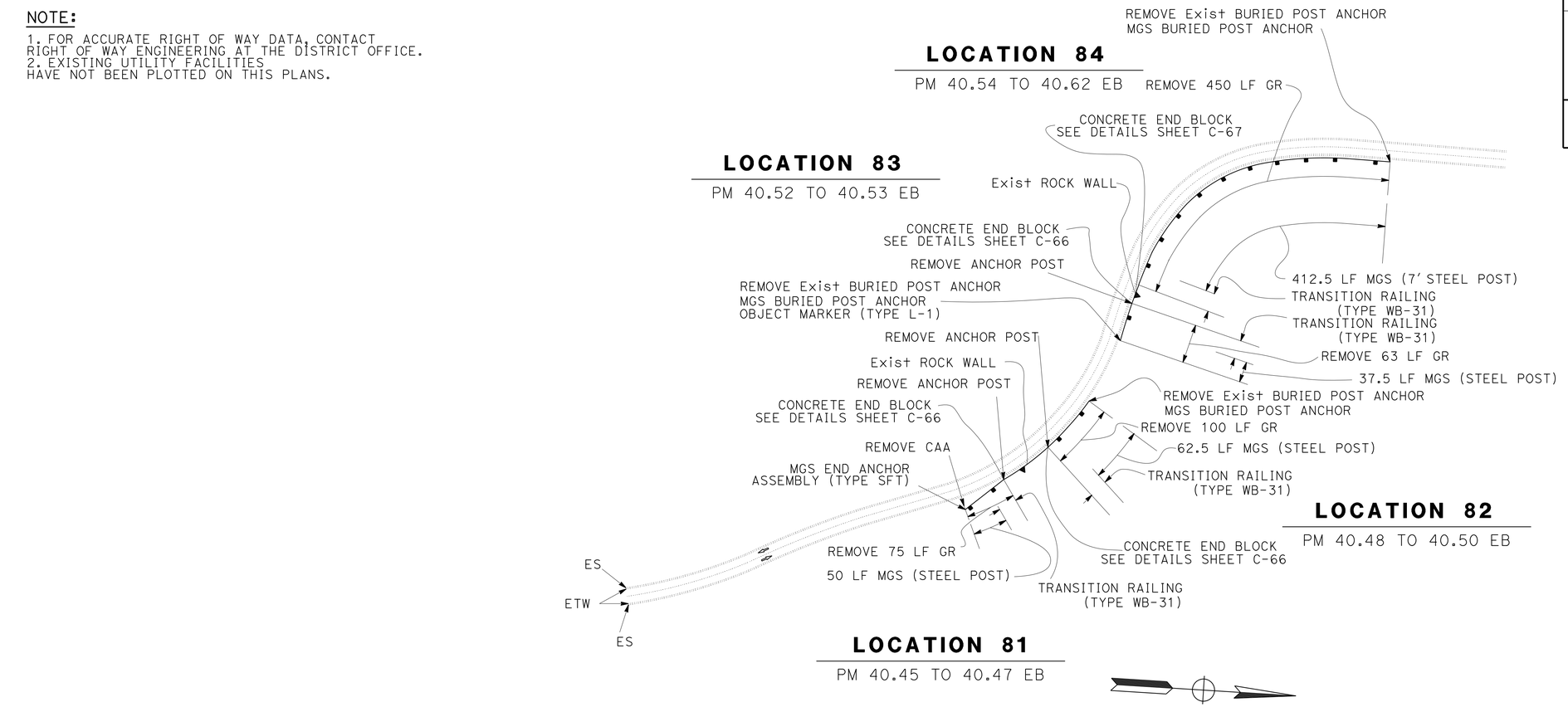

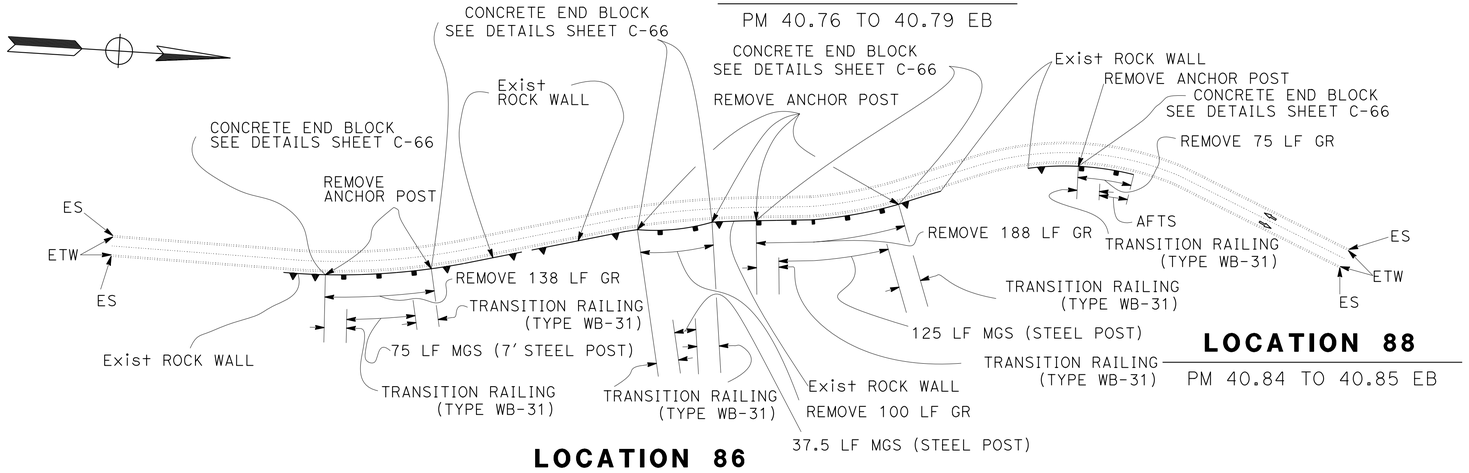

CONSTRUCTION DETAILS
ROUTE 70 (But)
NO SCALE

C-18

STATE OF CALIFORNIA - DEPARTMENT OF TRANSPORTATION — TRAFFIC — Caltrans

FUNCTIONAL SUPERVISOR: STEPHEN WRIGHT

CALCULATED-DESIGNED BY: AL G. CHIN
CHECKED BY: ERIC SOUZA
REVISED BY
DATE REVISED

LAST REVISION: 10-11-13
DATE PLOTTED => 29-MAY-2014
TIME PLOTTED => 08:42

BORDER LAST REVISED 7/2/2010 | USERNAME => s130875 | DGN FILE => 0300020450ga018.dgn | RELATIVE BORDER SCALE IS IN INCHES 0 1 2 3 | UNIT 0399 | PROJECT NUMBER & PHASE 03000204501

Dist	COUNTY	ROUTE	POST MILES TOTAL PROJECT	SHEET No.	TOTAL SHEETS
03	But,Col,Gln Sut,Yol,Yub	16,32,45 70,113,162	Var	36	195

2-10-14
REGISTERED CIVIL ENGINEER — DATE

REGISTERED PROFESSIONAL ENGINEER
ERIC NORMAN SOUZA
No. 75706
Exp. 06-30-14
CIVIL
STATE OF CALIFORNIA

2-10-14
PLANS APPROVAL DATE

THE STATE OF CALIFORNIA OR ITS OFFICERS OR AGENTS SHALL NOT BE RESPONSIBLE FOR THE ACCURACY OR COMPLETENESS OF SCANNED COPIES OF THIS PLAN SHEET.

NOTE:
1. FOR ACCURATE RIGHT OF WAY DATA, CONTACT RIGHT OF WAY ENGINEERING AT THE DISTRICT OFFICE.
2. EXISTING UTILITY FACILITIES HAVE NOT BEEN PLOTTED ON THESE PLANS.

LOCATION 134
PM 43.38 TO 43.39 WB

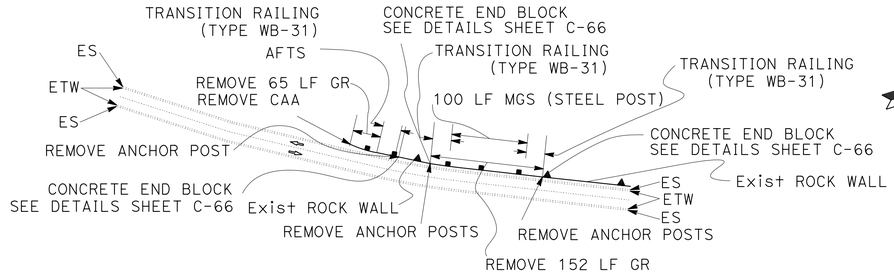

LOCATION 135
PM 43.40 TO 43.43 WB

LOCATION 132
PM 42.76 TO 42.80 WB

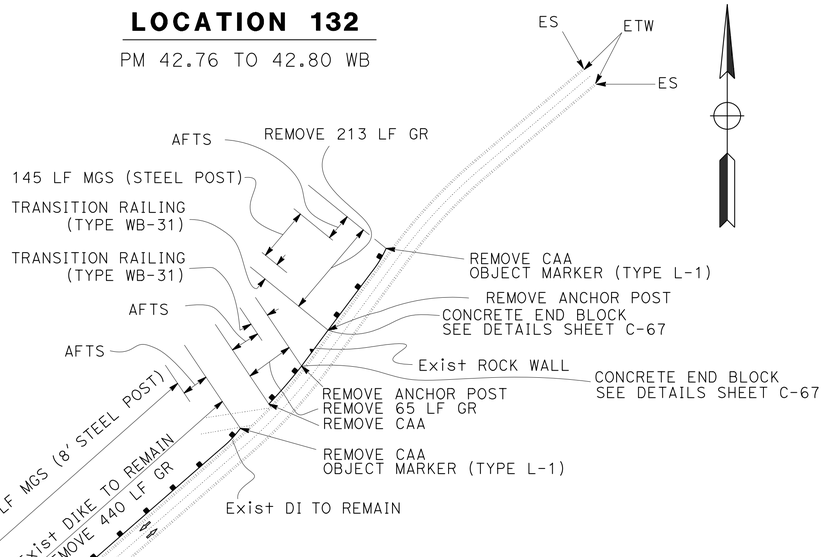

LOCATION 133
PM 43.05 TO 43.07 WB

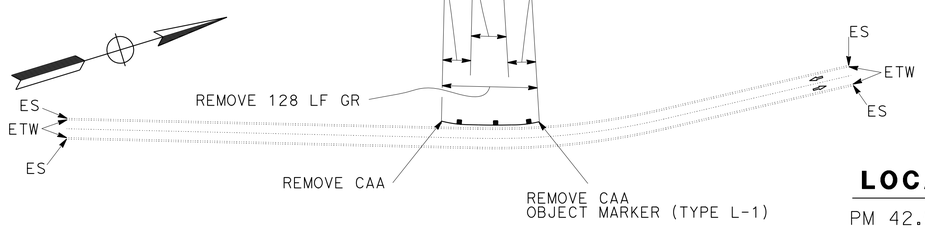

LOCATION 131
PM 42.72 TO 42.74 WB

LOCATION 130
PM 42.63 TO 42.71 WB

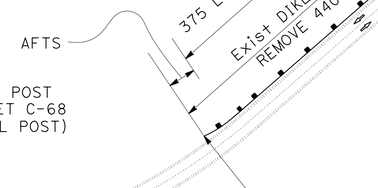

LOCATION 129
PM 42.57 TO 42.59 WB

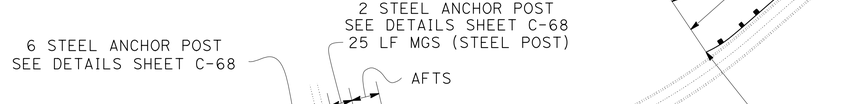

LOCATION 128
PM 42.41 TO 42.56 WB

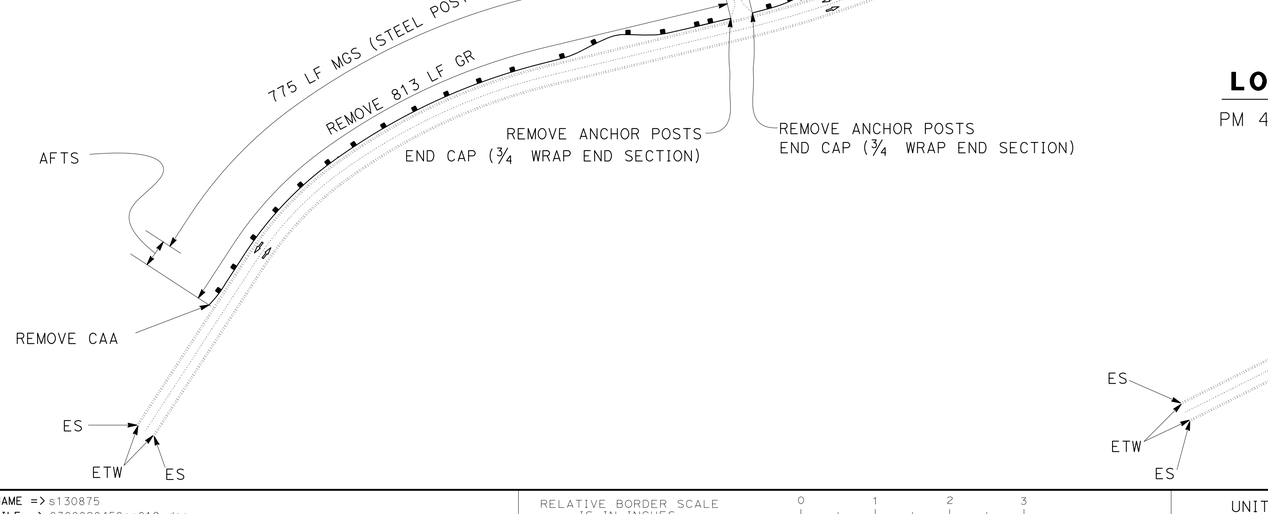

LOCATION 127
PM 41.90 TO 41.95 WB

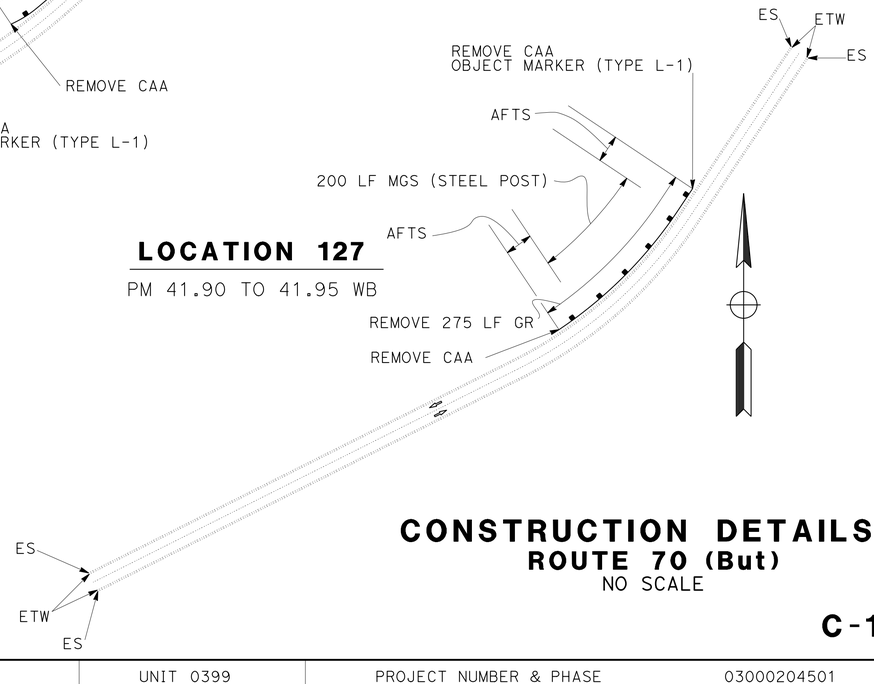

CONSTRUCTION DETAILS
ROUTE 70 (But)
NO SCALE

C-19

STATE OF CALIFORNIA - DEPARTMENT OF TRANSPORTATION
Caltrans®
TRAFFIC
FUNCTIONAL SUPERVISOR: STEPHEN WRIGHT
CALCULATED-DESIGNED BY: AL G. CHIN
CHECKED BY: ERIC SOUZA
REVISED BY
DATE REVISED

LAST REVISION 10-11-13
DATE PLOTTED => 29-MAY-2014
TIME PLOTTED => 08:42

BORDER LAST REVISED 7/2/2010
USERNAME => s130875
DGN FILE => 0300020450ga019.dgn
RELATIVE BORDER SCALE IS IN INCHES 0 1 2 3
UNIT 0399
PROJECT NUMBER & PHASE 03000204501

Dist	COUNTY	ROUTE	POST MILES TOTAL PROJECT	SHEET No.	TOTAL SHEETS
03	But,Col,Gln Sut,Yol,Yub	16,32,45 70,113,162	Var	37	195

REGISTERED CIVIL ENGINEER — DATE 2-10-14

PLANS APPROVAL DATE 2-10-14

REGISTERED PROFESSIONAL ENGINEER — ERIC NORMAN SOUZA — No. 75706 — Exp. 06-30-14 — CIVIL — STATE OF CALIFORNIA

THE STATE OF CALIFORNIA OR ITS OFFICERS OR AGENTS SHALL NOT BE RESPONSIBLE FOR THE ACCURACY OR COMPLETENESS OF SCANNED COPIES OF THIS PLAN SHEET.

NOTE:

1. FOR ACCURATE RIGHT OF WAY DATA, CONTACT RIGHT OF WAY ENGINEERING AT THE DISTRICT OFFICE.
2. EXISTING UTILITY FACILITIES HAVE NOT BEEN PLOTTED ON THESE PLANS.

LOCATION 140

PM 43.81 TO 43.86 WB

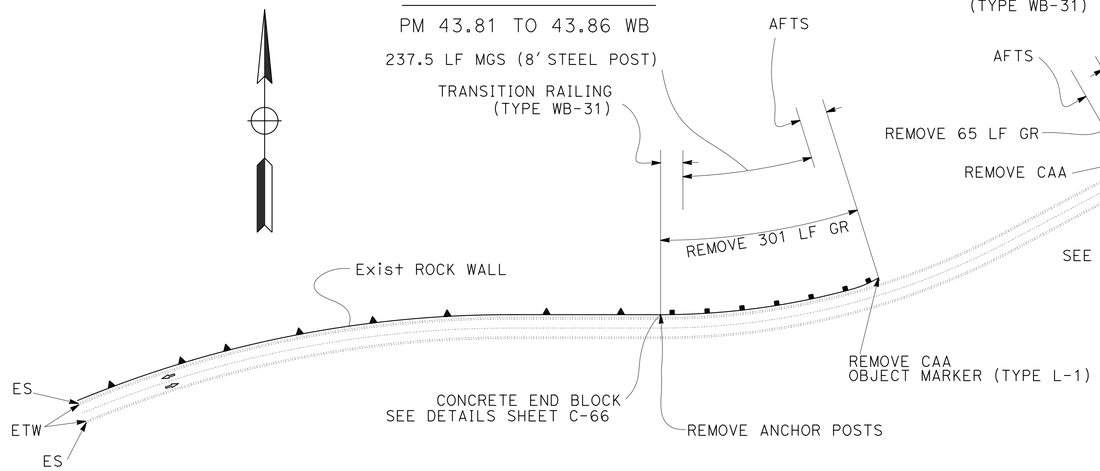

LOCATION 141

PM 43.99 TO 44.00 WB

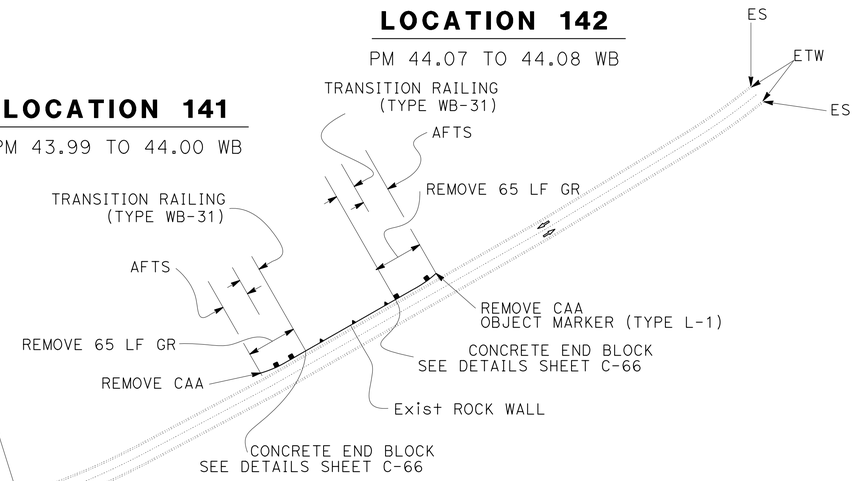

LOCATION 142

PM 44.07 TO 44.08 WB

LOCATION 138

PM 43.61 TO 43.62 WB

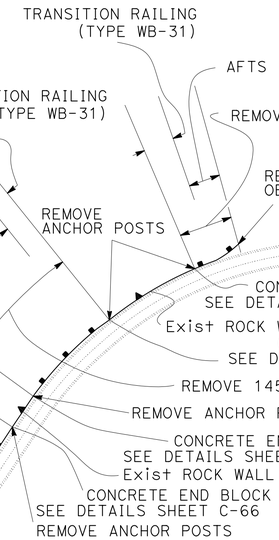

LOCATION 139

PM 43.71 TO 43.73 WB

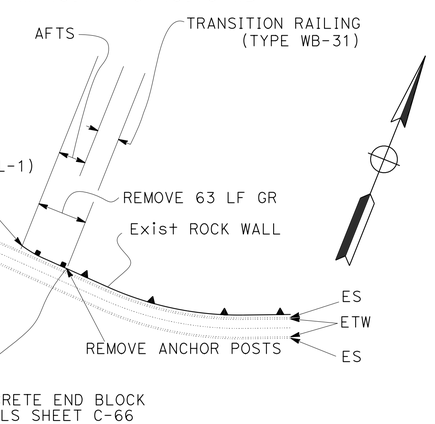

LOCATION 137

PM 43.57 TO 43.59 WB

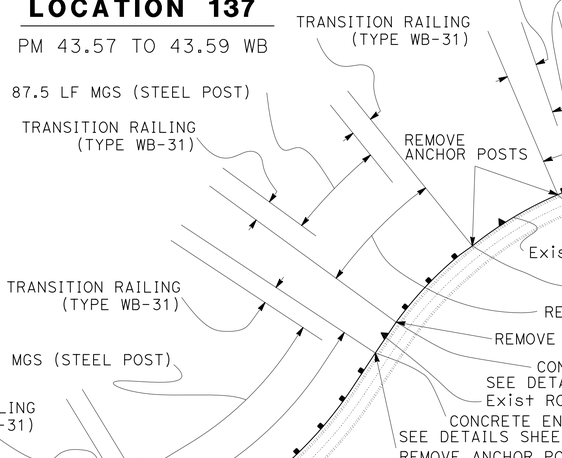

LOCATION 136

PM 43.48 TO 43.53 WB

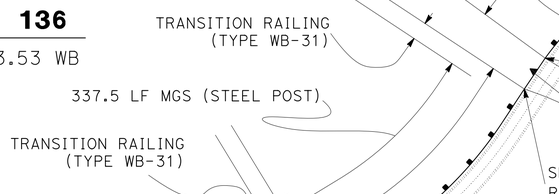

CONSTRUCTION DETAILS

ROUTE 70 (But)

NO SCALE

C-20

LAST REVISION: DATE PLOTTED => 29-MAY-2014, TIME PLOTTED => 08:42 — 10-11-13

STATE OF CALIFORNIA - DEPARTMENT OF TRANSPORTATION — TRAFFIC

FUNCTIONAL SUPERVISOR: STEPHEN WRIGHT

CALCULATED-DESIGNED BY: AL G. CHIN

CHECKED BY: ERIC SOUZA

REVISED BY	DATE REVISED

BORDER LAST REVISED 7/2/2010

USERNAME => s130875
DGN FILE => 0300020450ga020.dgn

RELATIVE BORDER SCALE IS IN INCHES 0 1 2 3

UNIT 0399

PROJECT NUMBER & PHASE 03000204501

Dist	COUNTY	ROUTE	POST MILES TOTAL PROJECT	SHEET No.	TOTAL SHEETS
03	But,Col,Gln Sut,Yol,Yub	16,32,45 70,113,162	Var	38	195

REGISTERED CIVIL ENGINEER — DATE 2-10-14

PLANS APPROVAL DATE 2-10-14

ERIC NORMAN SOUZA No. 75706 Exp.06-30-14 CIVIL — REGISTERED PROFESSIONAL ENGINEER — STATE OF CALIFORNIA

THE STATE OF CALIFORNIA OR ITS OFFICERS OR AGENTS SHALL NOT BE RESPONSIBLE FOR THE ACCURACY OR COMPLETENESS OF SCANNED COPIES OF THIS PLAN SHEET.

NOTE:

1. FOR ACCURATE RIGHT OF WAY DATA, CONTACT RIGHT OF WAY ENGINEERING AT THE DISTRICT OFFICE.
2. EXISTING UTILITY FACILITIES HAVE NOT BEEN PLOTTED ON THESE PLANS.

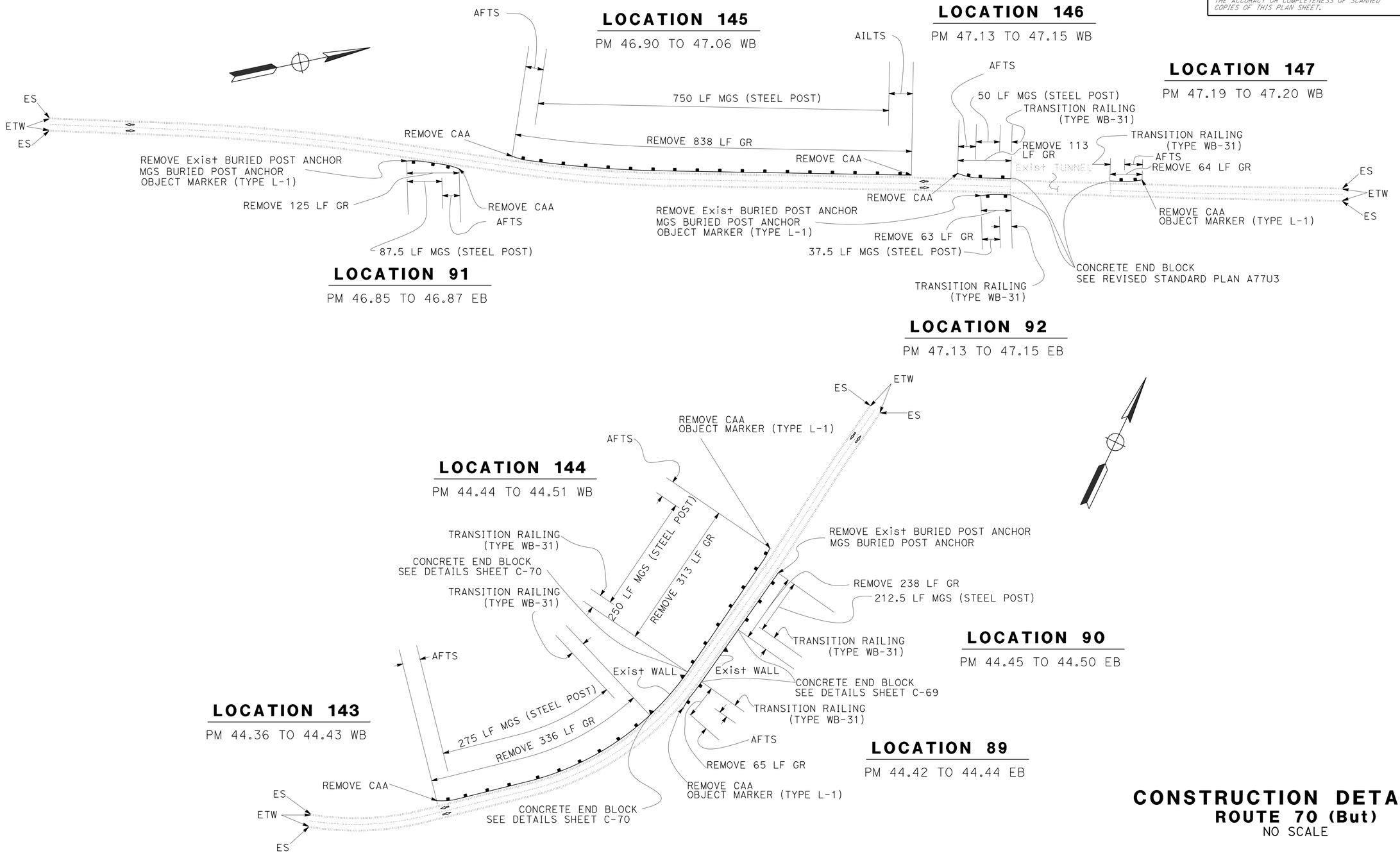

CONSTRUCTION DETAILS
ROUTE 70 (But)
NO SCALE

C-21

REVISED BY	DATE REVISED
AL G. CHIN	ERIC SOUZA
CALCULATED-DESIGNED BY	CHECKED BY
FUNCTIONAL SUPERVISOR	STEPHEN WRIGHT

STATE OF CALIFORNIA - DEPARTMENT OF TRANSPORTATION
Caltrans®
TRAFFIC

LAST REVISION 10-11-13 | DATE PLOTTED => 29-MAY-2014 | TIME PLOTTED => 08:42

BORDER LAST REVISED 7/2/2010 | USERNAME => s130875 | DGN FILE => 0300020450ga021.dgn | RELATIVE BORDER SCALE IS IN INCHES 0 1 2 3 | UNIT 0399 | PROJECT NUMBER & PHASE 03000204501

Dist	COUNTY	ROUTE	POST MILES TOTAL PROJECT	SHEET No.	TOTAL SHEETS
03	But,Col,Gln Sut,Yol,Yub	16,32,45 70,113,162	Var	39	195

REGISTERED CIVIL ENGINEER 2-10-14 DATE

PLANS APPROVAL DATE 2-10-14

REGISTERED PROFESSIONAL ENGINEER ERIC NORMAN SOUZA No. 75706 Exp. 06-30-14 CIVIL STATE OF CALIFORNIA

THE STATE OF CALIFORNIA OR ITS OFFICERS OR AGENTS SHALL NOT BE RESPONSIBLE FOR THE ACCURACY OR COMPLETENESS OF SCANNED COPIES OF THIS PLAN SHEET.

NOTE:

1. FOR ACCURATE RIGHT OF WAY DATA, CONTACT RIGHT OF WAY ENGINEERING AT THE DISTRICT OFFICE.
2. EXISTING UTILITY FACILITIES HAVE NOT BEEN PLOTTED ON THESE PLANS.

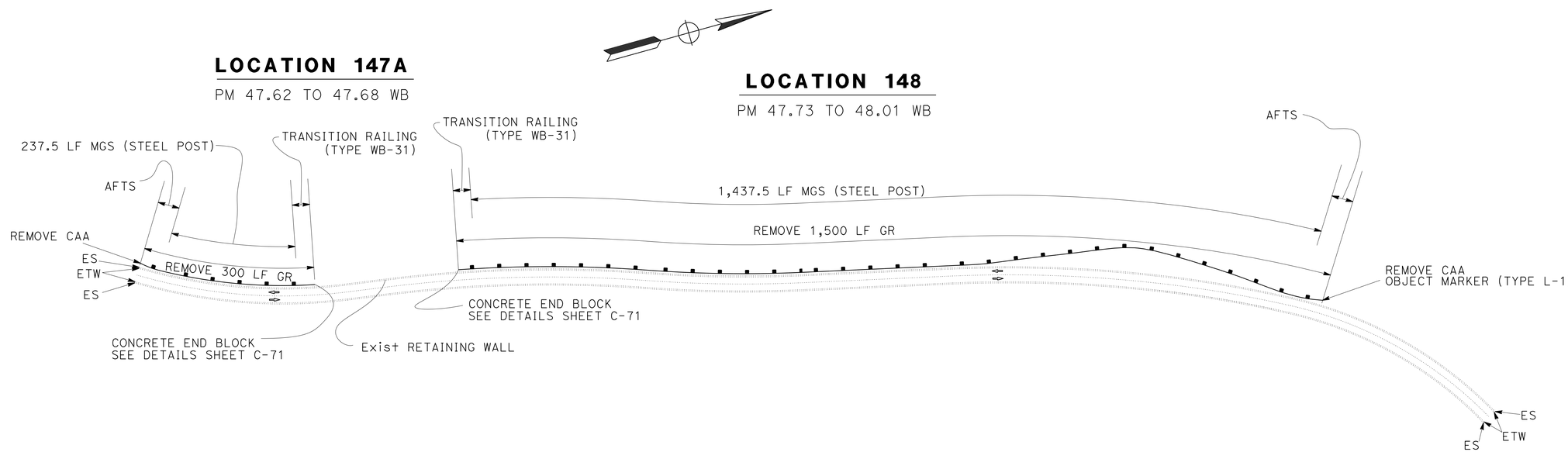

CONSTRUCTION DETAILS
ROUTE 70 (But)
NO SCALE

C-22

STATE OF CALIFORNIA - DEPARTMENT OF TRANSPORTATION
Caltrans
TRAFFIC

FUNCTIONAL SUPERVISOR: STEPHEN WRIGHT
CALCULATED-DESIGNED BY: AL G. CHIN
CHECKED BY: ERIC SOUZA
REVISED BY
DATE REVISED

LAST REVISION 10-11-13
DATE PLOTTED => 29-MAY-2014
TIME PLOTTED => 08:42

Dist	COUNTY	ROUTE	POST MILES TOTAL PROJECT	SHEET No.	TOTAL SHEETS
03	But,Col,Gln Sut,Yol,Yub	16,32,45 70,113,162	Var	40	195

REGISTERED CIVIL ENGINEER — DATE 2-10-14

PLANS APPROVAL DATE 2-10-14

REGISTERED PROFESSIONAL ENGINEER — ERIC NORMAN SOUZA No. 75706 Exp. 06-30-14 CIVIL — STATE OF CALIFORNIA

THE STATE OF CALIFORNIA OR ITS OFFICERS OR AGENTS SHALL NOT BE RESPONSIBLE FOR THE ACCURACY OR COMPLETENESS OF SCANNED COPIES OF THIS PLAN SHEET.

NOTE:

1. FOR ACCURATE RIGHT OF WAY DATA, CONTACT RIGHT OF WAY ENGINEERING AT THE DISTRICT OFFICE.
2. EXISTING UTILITY FACILITIES HAVE NOT BEEN PLOTTED ON THESE PLANS.

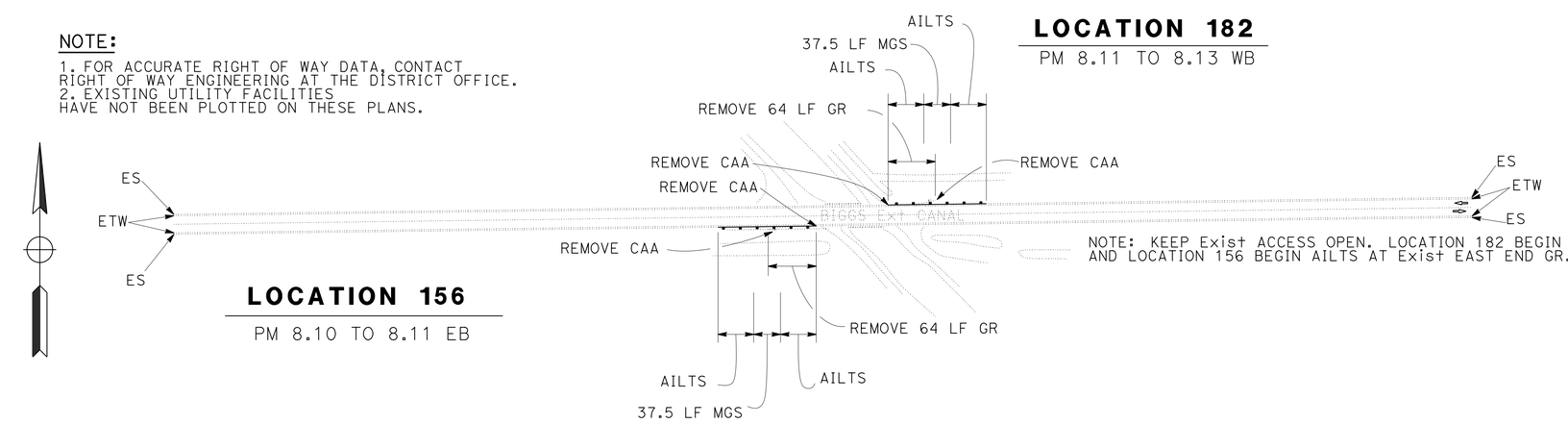

LOCATION 182
PM 8.11 TO 8.13 WB

LOCATION 156
PM 8.10 TO 8.11 EB

NOTE: KEEP Exist ACCESS OPEN. LOCATION 182 BEGIN AILTS AT Exist WEST END GR AND LOCATION 156 BEGIN AILTS AT Exist EAST END GR.

REMOVE GR

LOCATION	LF
149	64
154	53
175	66
180	63
181	50

LOCATION 180
PM 1.31 TO 1.32 WB

LOCATION 181
PM 1.33 TO 1.34 WB

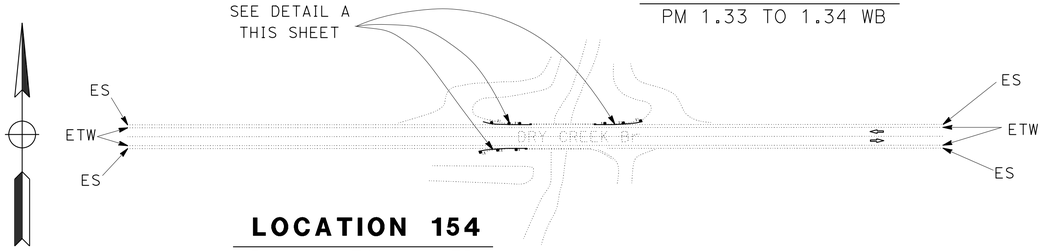

LOCATION 154
PM 1.32 TO 1.33 EB

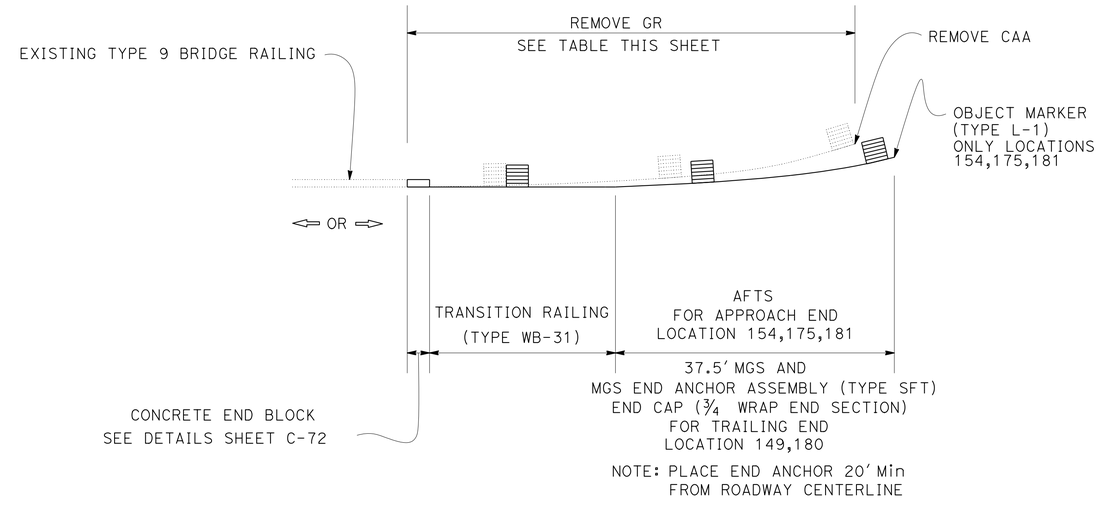

DETAIL A
NO SCALE

LOCATION 175
PM 0.03 TO 0.04 WB

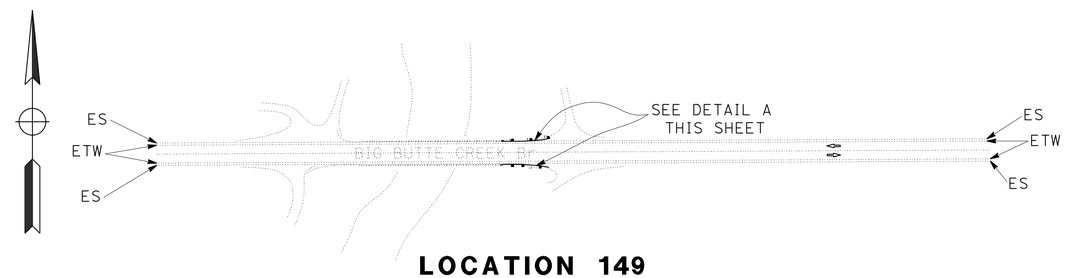

LOCATION 149
PM 0.03 TO 0.04 EB

CONSTRUCTION DETAILS
ROUTE 162 (But)
NO SCALE

C-23

REVISED BY | DATE REVISED
CALCULATED-DESIGNED BY: AL G. CHIN
CHECKED BY: ERIC SOUZA
FUNCTIONAL SUPERVISOR: STEPHEN WRIGHT
STATE OF CALIFORNIA - DEPARTMENT OF TRANSPORTATION
Caltrans® TRAFFIC

LAST REVISION | DATE PLOTTED => 29-MAY-2014
11-12-13 | TIME PLOTTED => 08:42

BORDER LAST REVISED 7/2/2010 | USERNAME => s130875 | DGN FILE => 0300020450ga023.dgn | RELATIVE BORDER SCALE IS IN INCHES 0 1 2 3 | UNIT 0399 | PROJECT NUMBER & PHASE 03000204501

Dist	COUNTY	ROUTE	POST MILES TOTAL PROJECT	SHEET No.	TOTAL SHEETS
03	But,Col,Gln Sut,Yol,Yub	16,32,45 70,113,162	Var	41	195

REGISTERED CIVIL ENGINEER — DATE 2-10-14

PLANS APPROVAL DATE 2-10-14

REGISTERED PROFESSIONAL ENGINEER — ERIC NORMAN SOUZA No. 75706 Exp. 06-30-14 CIVIL — STATE OF CALIFORNIA

THE STATE OF CALIFORNIA OR ITS OFFICERS OR AGENTS SHALL NOT BE RESPONSIBLE FOR THE ACCURACY OR COMPLETENESS OF SCANNED COPIES OF THIS PLAN SHEET.

NOTE:

1. FOR ACCURATE RIGHT OF WAY DATA, CONTACT RIGHT OF WAY ENGINEERING AT THE DISTRICT OFFICE.
2. EXISTING UTILITY FACILITIES HAVE NOT BEEN PLOTTED ON THESE PLANS.

LOCATION 184

PM R10.25 TO R10.54 WB

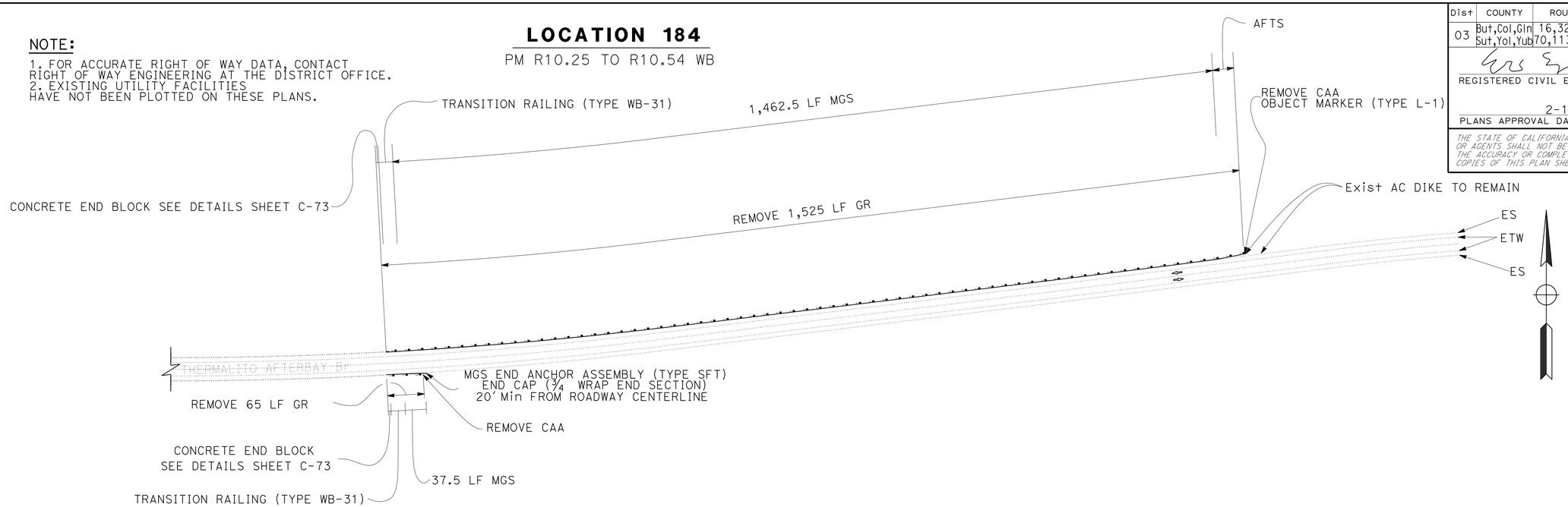

LOCATION 159

PM R10.25 TO R10.27 EB

LOCATION 183

PM R9.91 TO R10.11 WB

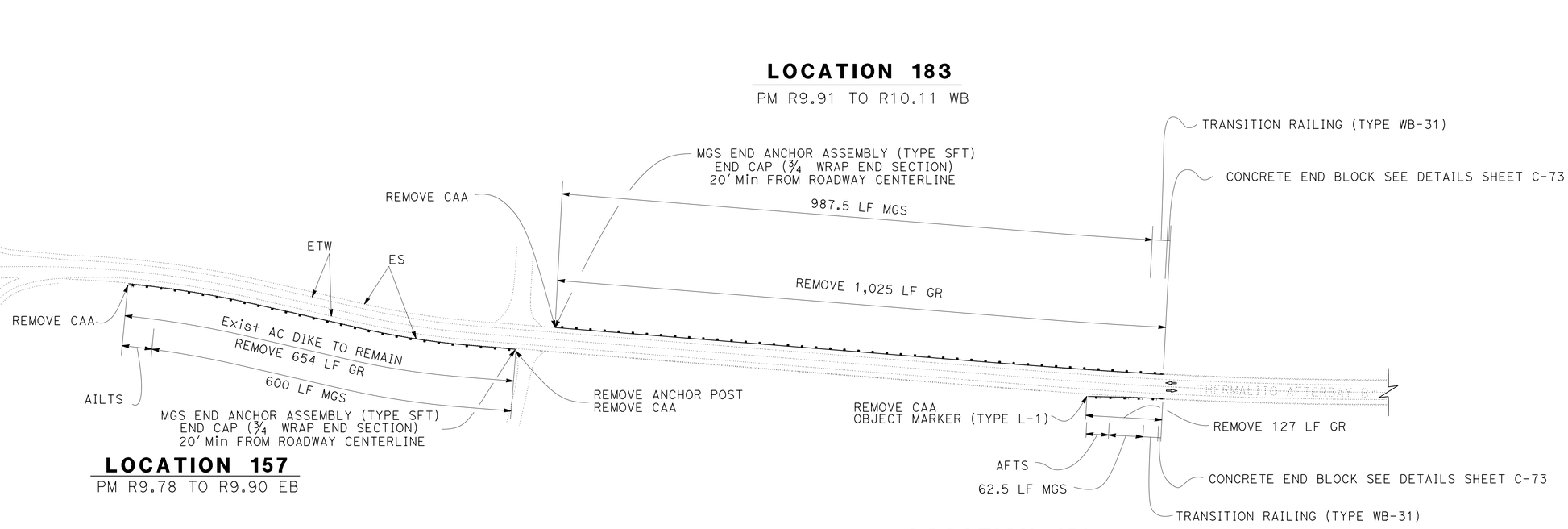

LOCATION 157

PM R9.78 TO R9.90 EB

LOCATION 158

PM R10.09 TO R10.11EB

CONSTRUCTION DETAILS

ROUTE 162 (But)

NO SCALE

C-24

REVISED BY	DATE REVISED
AL G. CHIN	ERIC SOUZA
CALCULATED-DESIGNED BY	CHECKED BY
FUNCTIONAL SUPERVISOR	STEPHEN WRIGHT

STATE OF CALIFORNIA - DEPARTMENT OF TRANSPORTATION — TRAFFIC

Caltrans

LAST REVISION 11-12-13 — DATE PLOTTED => 29-MAY-2014 — TIME PLOTTED => 08:42

BORDER LAST REVISED 7/2/2010 | USERNAME => s130875 | DGN FILE => 0300020450ga024.dgn | RELATIVE BORDER SCALE IS IN INCHES 0 1 2 3 | UNIT 0399 | PROJECT NUMBER & PHASE 03000204501

Dist	COUNTY	ROUTE	POST MILES TOTAL PROJECT	SHEET No.	TOTAL SHEETS
03	But,Col,Gln Sut,Yol,Yub	16,32,45 70,113,162	Var	42	195

REGISTERED CIVIL ENGINEER — 2-10-14 DATE

2-10-14
PLANS APPROVAL DATE

ERIC NORMAN SOUZA No. 75706 Exp.06-30-14 CIVIL — REGISTERED PROFESSIONAL ENGINEER — STATE OF CALIFORNIA

THE STATE OF CALIFORNIA OR ITS OFFICERS OR AGENTS SHALL NOT BE RESPONSIBLE FOR THE ACCURACY OR COMPLETENESS OF SCANNED COPIES OF THIS PLAN SHEET.

NOTE:

1. FOR ACCURATE RIGHT OF WAY DATA, CONTACT RIGHT OF WAY ENGINEERING AT THE DISTRICT OFFICE.
2. EXISTING UTILITY FACILITIES HAVE NOT BEEN PLOTTED ON THESE PLANS.

LOCATION 185

PM 16.99 TO 17.03 WB

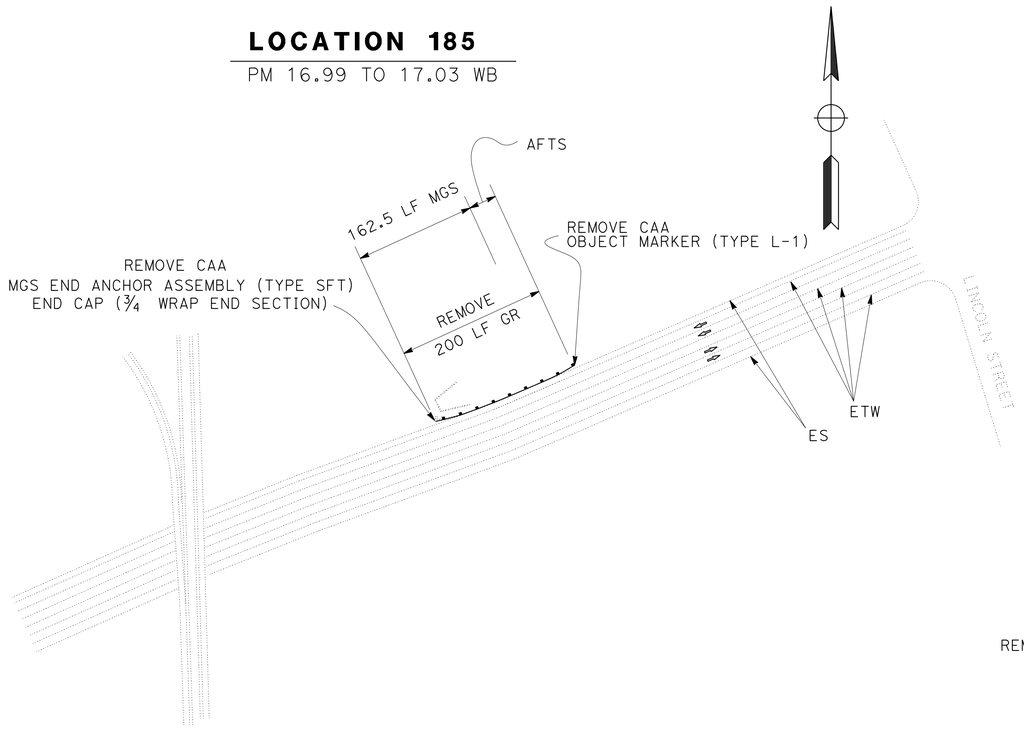

LOCATION 186

PM 19.26 TO 19.27 WB

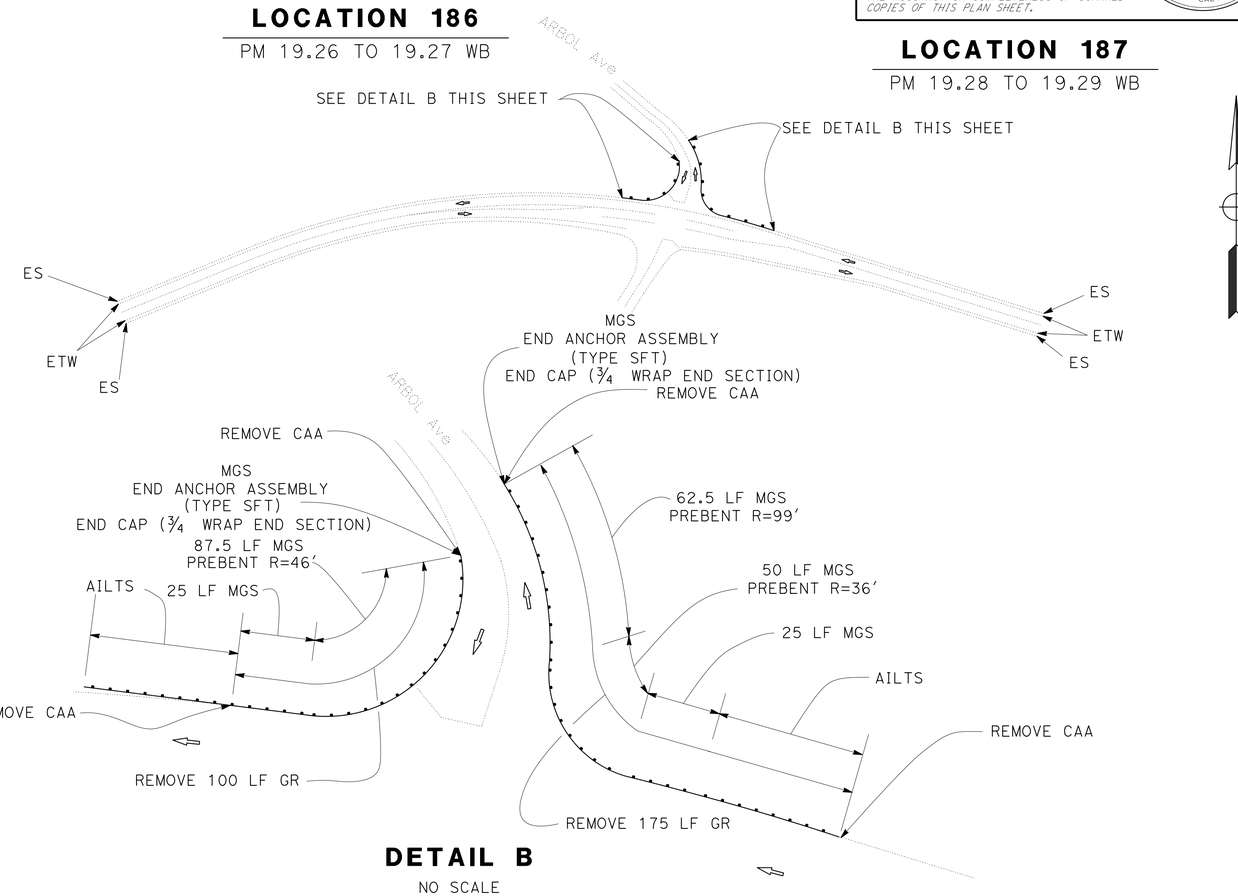

LOCATION 187

PM 19.28 TO 19.29 WB

LOCATION 184A

PM 15.82 TO 15.85 WB

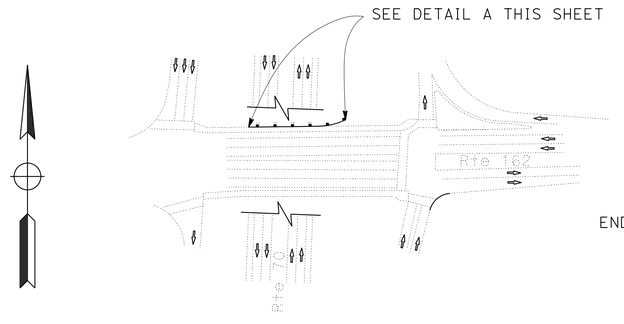

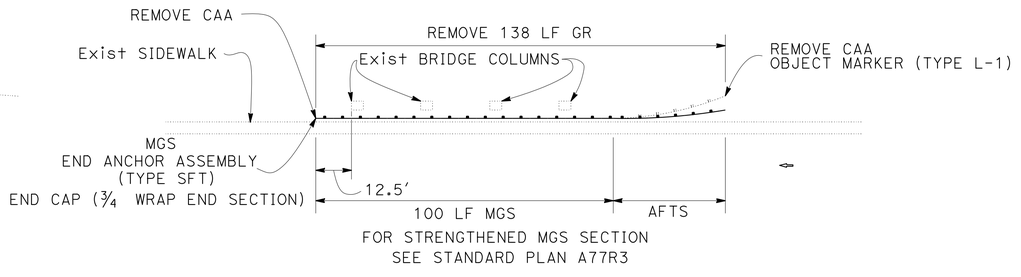

DETAIL B

NO SCALE

DETAIL A

NO SCALE

CONSTRUCTION DETAILS
ROUTE 162 (But)

NO SCALE

C-25

STATE OF CALIFORNIA - DEPARTMENT OF TRANSPORTATION
Caltrans®
TRAFFIC
FUNCTIONAL SUPERVISOR: STEPHEN WRIGHT
CALCULATED-DESIGNED BY: AL G. CHIN
CHECKED BY: ERIC SOUZA
REVISED BY
DATE REVISED

LAST REVISION 11-12-13
DATE PLOTTED => 29-MAY-2014
TIME PLOTTED => 08:43

Dist	COUNTY	ROUTE	POST MILES TOTAL PROJECT	SHEET No.	TOTAL SHEETS
03	But,Col,Gln Sut,Yol,Yub	16,32,45 70,113,162	Var	43	195

2-10-14
REGISTERED CIVIL ENGINEER DATE

2-10-14
PLANS APPROVAL DATE

REGISTERED PROFESSIONAL ENGINEER
ERIC NORMAN SOUZA
No. 75706
Exp. 06-30-14
CIVIL
STATE OF CALIFORNIA

THE STATE OF CALIFORNIA OR ITS OFFICERS OR AGENTS SHALL NOT BE RESPONSIBLE FOR THE ACCURACY OR COMPLETENESS OF SCANNED COPIES OF THIS PLAN SHEET.

NOTE:

1. FOR ACCURATE RIGHT OF WAY DATA, CONTACT RIGHT OF WAY ENGINEERING AT THE DISTRICT OFFICE.
2. EXISTING UTILITY FACILITIES HAVE NOT BEEN PLOTTED ON THESE PLANS.

LOCATION 188
PM 21.49 TO 21.59 WB

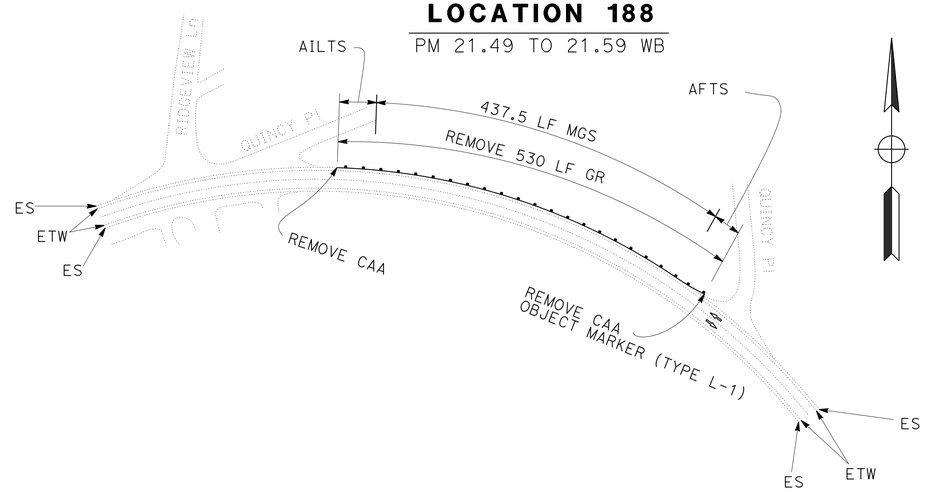

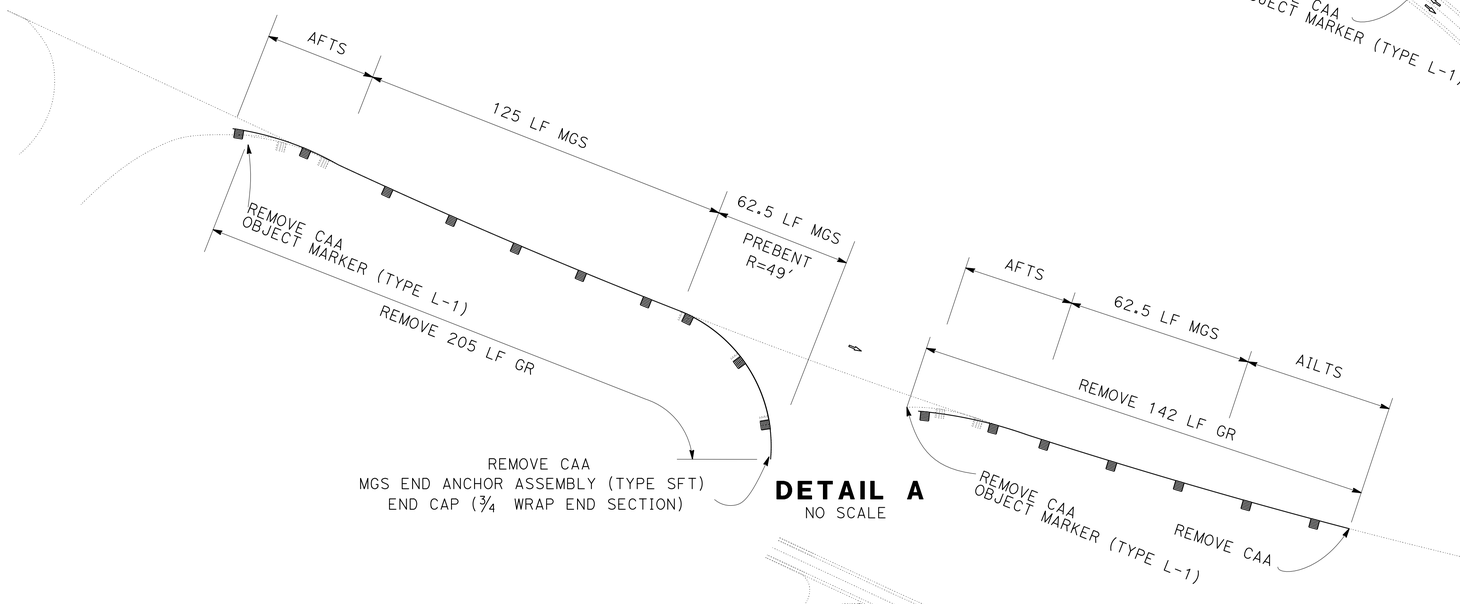

DETAIL A
NO SCALE

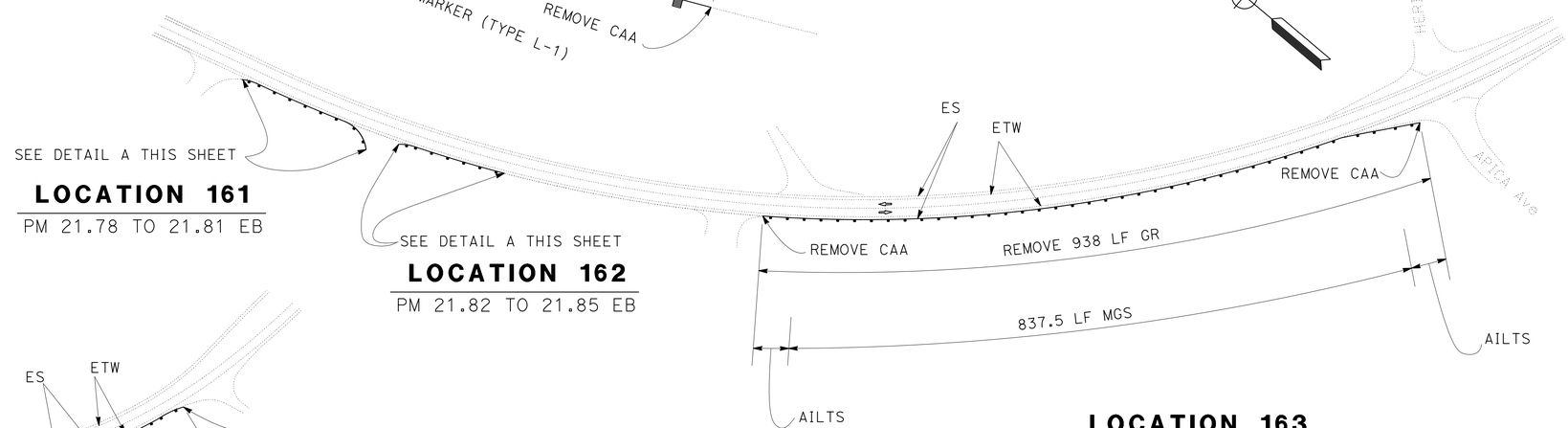

LOCATION 161
PM 21.78 TO 21.81 EB

LOCATION 162
PM 21.82 TO 21.85 EB

LOCATION 163
PM 21.92 TO 22.10 EB

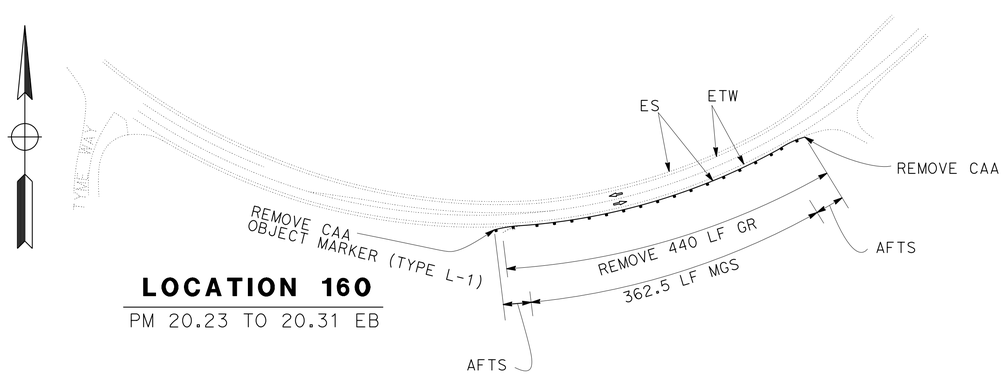

LOCATION 160
PM 20.23 TO 20.31 EB

CONSTRUCTION DETAILS
ROUTE 162 (But)
NO SCALE

C-26

LAST REVISION 11-12-13 | DATE PLOTTED => 29-MAY-2014 | TIME PLOTTED => 08:43

STATE OF CALIFORNIA - DEPARTMENT OF TRANSPORTATION
Caltrans®
TRAFFIC
FUNCTIONAL SUPERVISOR: STEPHEN WRIGHT
CALCULATED-DESIGNED BY: AL G. CHIN
CHECKED BY: ERIC SOUZA
REVISED BY | DATE REVISED

BORDER LAST REVISED 7/2/2010 | USERNAME => s130875 | DGN FILE => 0300020450ga026.dgn | RELATIVE BORDER SCALE IS IN INCHES 0 1 2 3 | UNIT 0399 | PROJECT NUMBER & PHASE 03000204501

Dist	COUNTY	ROUTE	POST MILES TOTAL PROJECT	SHEET No.	TOTAL SHEETS
03	But,Col,Gln Sut,Yol,Yub	16,32,45 70,113,162	Var	44	195

REGISTERED CIVIL ENGINEER — DATE 2-10-14

PLANS APPROVAL DATE 2-10-14

ERIC NORMAN SOUZA No. 75706 Exp. 06-30-14 CIVIL — REGISTERED PROFESSIONAL ENGINEER — STATE OF CALIFORNIA

THE STATE OF CALIFORNIA OR ITS OFFICERS OR AGENTS SHALL NOT BE RESPONSIBLE FOR THE ACCURACY OR COMPLETENESS OF SCANNED COPIES OF THIS PLAN SHEET.

NOTE:

1. FOR ACCURATE RIGHT OF WAY DATA, CONTACT RIGHT OF WAY ENGINEERING AT THE DISTRICT OFFICE.
2. EXISTING UTILITY FACILITIES HAVE NOT BEEN PLOTTED ON THESE PLANS.

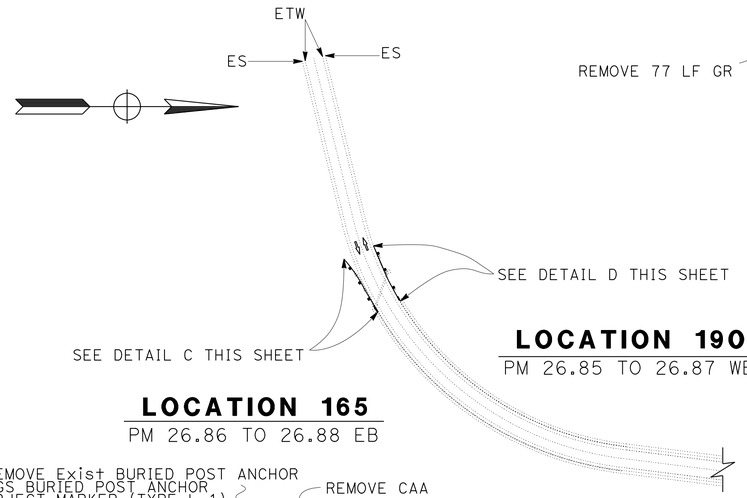

LOCATION 190
PM 26.85 TO 26.87 WB

LOCATION 165
PM 26.86 TO 26.88 EB

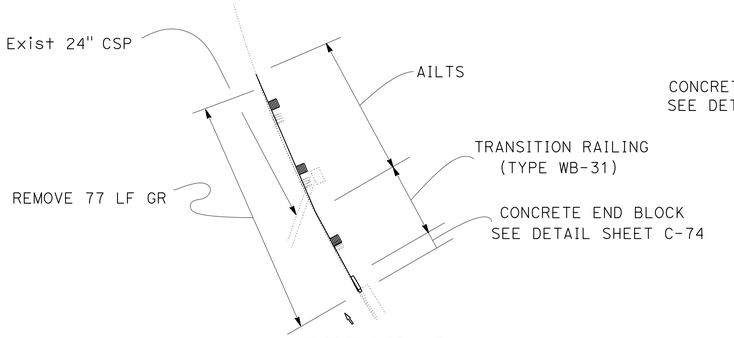

DETAIL D
NO SCALE

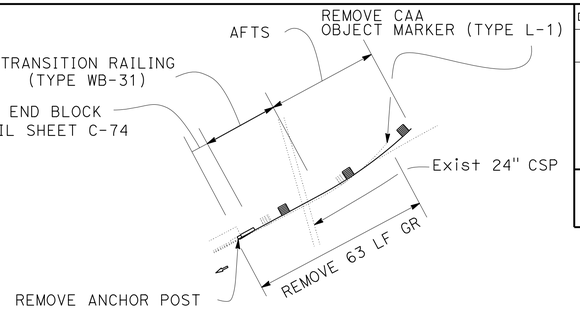

DETAIL F
NO SCALE

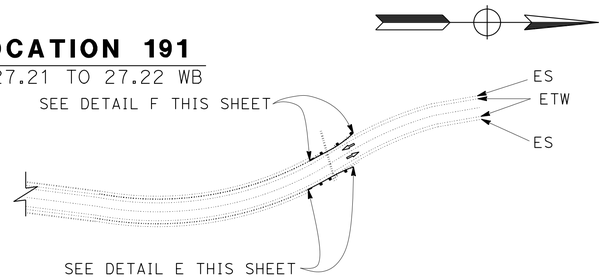

LOCATION 191
PM 27.21 TO 27.22 WB

LOCATION 166
PM 27.21 TO 27.22 EB

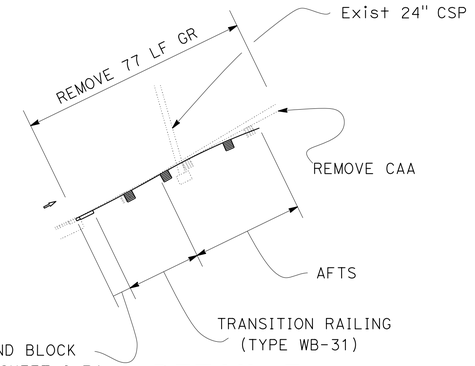

DETAIL E
NO SCALE

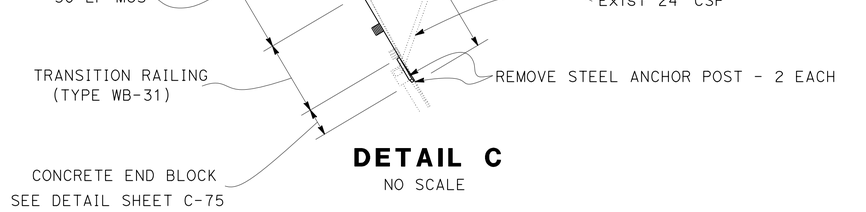

DETAIL C
NO SCALE

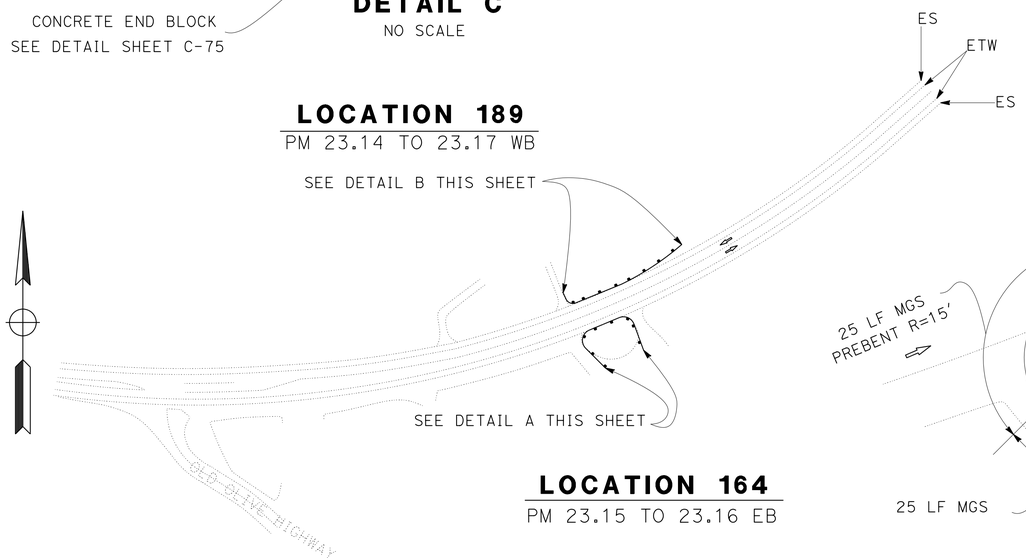

LOCATION 189
PM 23.14 TO 23.17 WB

LOCATION 164
PM 23.15 TO 23.16 EB

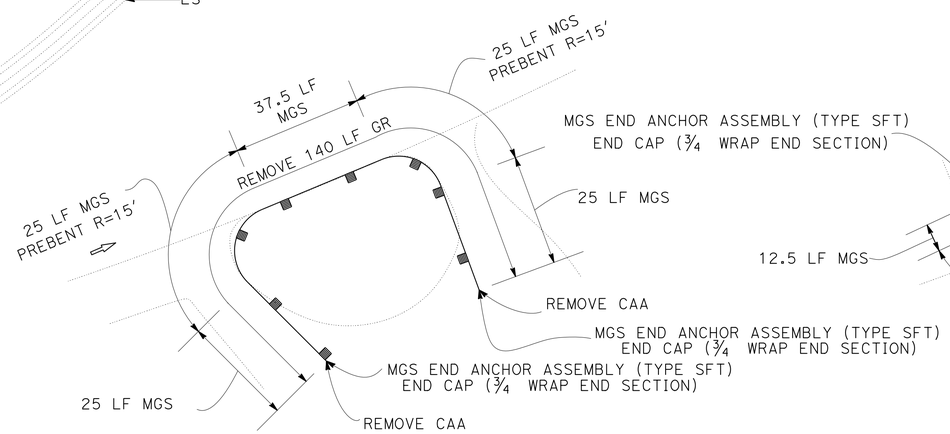

DETAIL A
NO SCALE

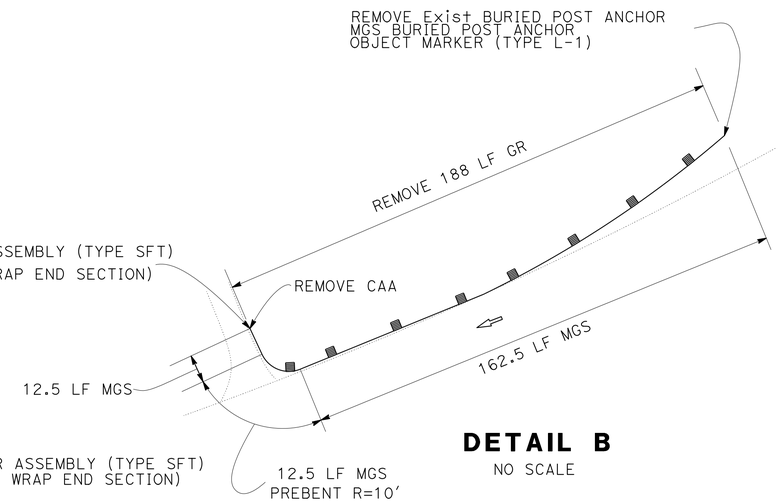

DETAIL B
NO SCALE

CONSTRUCTION DETAILS
ROUTE 162 (But)
NO SCALE

C-27

STATE OF CALIFORNIA - DEPARTMENT OF TRANSPORTATION — TRAFFIC

FUNCTIONAL SUPERVISOR: STEPHEN WRIGHT

CALCULATED-DESIGNED BY: AL G. CHIN

CHECKED BY: ERIC SOUZA

REVISED BY | DATE REVISED

LAST REVISION | DATE PLOTTED => 29-MAY-2014
11-12-13 | TIME PLOTTED => 08:43

BORDER LAST REVISED 7/2/2010 | USERNAME => s130875 | DGN FILE => 0300020450ga027.dgn | RELATIVE BORDER SCALE IS IN INCHES 0 1 2 3 | UNIT 0399 | PROJECT NUMBER & PHASE 03000204501

Dist	COUNTY	ROUTE	POST MILES TOTAL PROJECT	SHEET No.	TOTAL SHEETS
03	But,Col,Gln Sut,Yol,Yub	16,32,45 70,113,162	Var	45	195

REGISTERED CIVIL ENGINEER — 2-10-14 DATE

ERIC NORMAN SOUZA No. 75706 Exp.06-30-14 CIVIL — REGISTERED PROFESSIONAL ENGINEER — STATE OF CALIFORNIA

2-10-14
PLANS APPROVAL DATE

THE STATE OF CALIFORNIA OR ITS OFFICERS OR AGENTS SHALL NOT BE RESPONSIBLE FOR THE ACCURACY OR COMPLETENESS OF SCANNED COPIES OF THIS PLAN SHEET.

NOTE:

1. FOR ACCURATE RIGHT OF WAY DATA, CONTACT RIGHT OF WAY ENGINEERING AT THE DISTRICT OFFICE.
2. EXISTING UTILITY FACILITIES HAVE NOT BEEN PLOTTED ON THESE PLANS.

LOCATION 194
PM 27.63 TO 27.78 WB

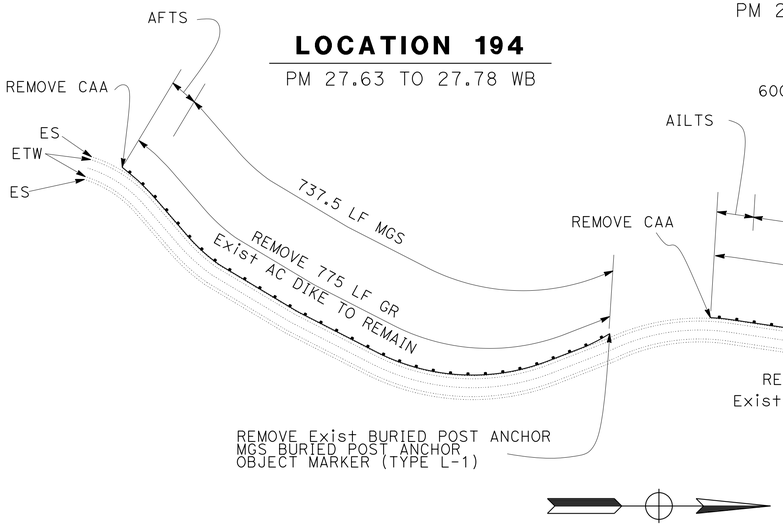

LOCATION 195
PM 27.80 TO 27.92 WB

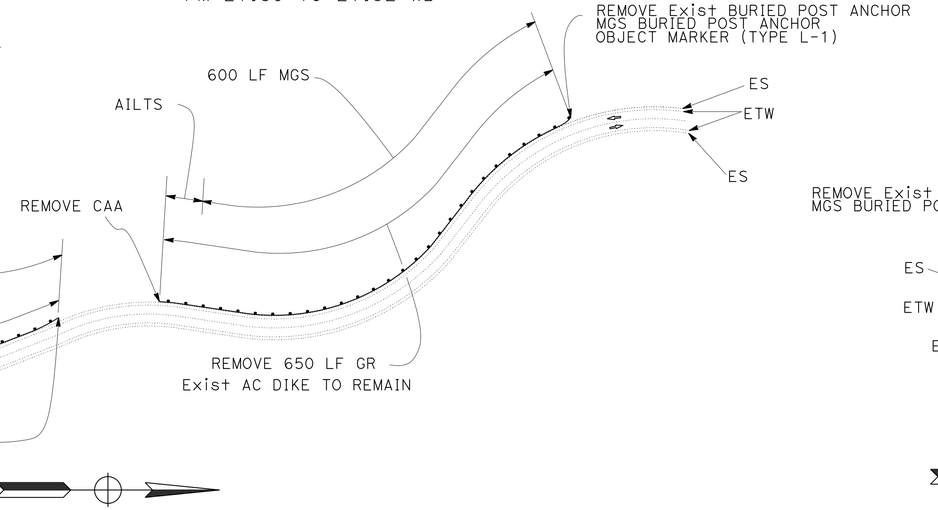

LOCATION 196
PM 27.97 TO 28.08 WB

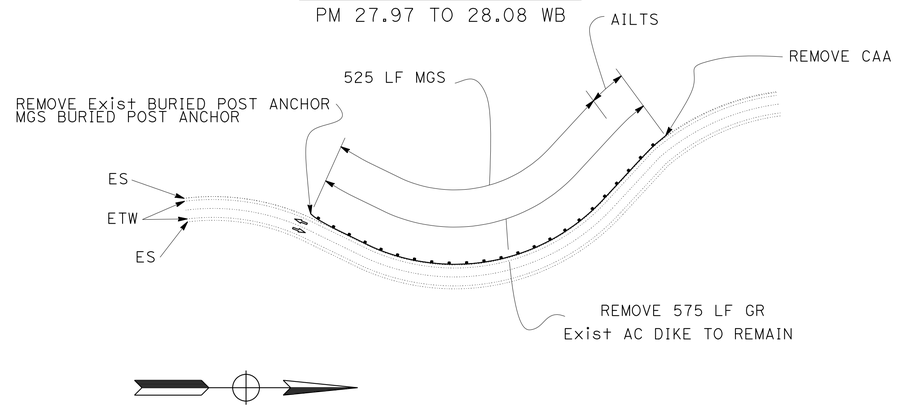

LOCATION 192
PM 27.28 TO 27.34 WB

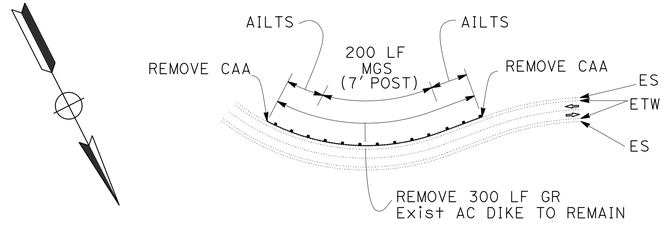

LOCATION 193
PM 27.45 TO 27.48 WB

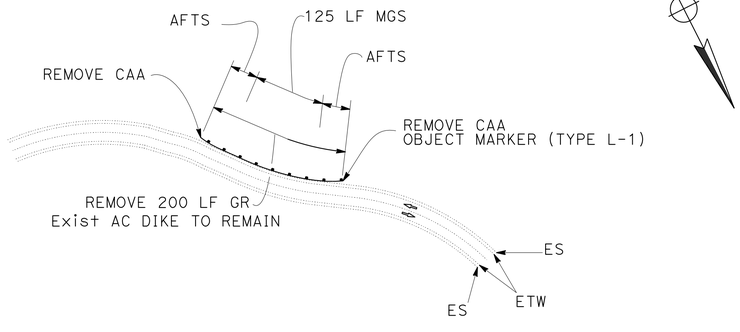

CONSTRUCTION DETAILS
ROUTE 162 (But)
NO SCALE

C-28

STATE OF CALIFORNIA - DEPARTMENT OF TRANSPORTATION
Caltrans®
TRAFFIC
FUNCTIONAL SUPERVISOR: STEPHEN WRIGHT
CALCULATED-DESIGNED BY: AL G. CHIN
CHECKED BY: ERIC SOUZA
REVISED BY
DATE REVISED

LAST REVISION 00-00-00
DATE PLOTTED => 29-MAY-2014
TIME PLOTTED => 08:43

BORDER LAST REVISED 7/2/2010
USERNAME => s130875
DGN FILE => 0300020450ga028.dgn
RELATIVE BORDER SCALE IS IN INCHES 0 1 2 3
UNIT 0399
PROJECT NUMBER & PHASE 03000204501

Dist	COUNTY	ROUTE	POST MILES TOTAL PROJECT	SHEET No.	TOTAL SHEETS
03	But,Col,Gln Sut,Yol,Yub	16,32,45 70,113,162	Var	46	195

REGISTERED CIVIL ENGINEER — DATE 2-10-14

PLANS APPROVAL DATE 2-10-14

REGISTERED PROFESSIONAL ENGINEER — ERIC NORMAN SOUZA No. 75706 Exp.06-30-14 CIVIL — STATE OF CALIFORNIA

THE STATE OF CALIFORNIA OR ITS OFFICERS OR AGENTS SHALL NOT BE RESPONSIBLE FOR THE ACCURACY OR COMPLETENESS OF SCANNED COPIES OF THIS PLAN SHEET.

MGS END ANCHOR ASSEMBLY (TYPE SFT)
END CAP (¾ WRAP END SECTION)
20' FROM EP

1975.0 LF MGS

REMOVE CAA

REMOVE 1,975 LF GR
Exist AC DIKE TO REMAIN

ES
ETW
ES

REMOVE Exist BURIED POST ANCHOR
MGS BURIED POST ANCHOR
OBJECT MARKER (TYPE L-1)

ES
ETW
ES

LOCATION 201
PM 29.30 TO 29.67 WB

NOTE:

1. FOR ACCURATE RIGHT OF WAY DATA, CONTACT RIGHT OF WAY ENGINEERING AT THE DISTRICT OFFICE.
2. EXISTING UTILITY FACILITIES HAVE NOT BEEN PLOTTED ON THESE PLANS.

LOCATION 199
PM 29.03 TO 29.06 WB

87.5 LF MGS
AFTS
AFTS
REMOVE CAA
OBJECT MARKER (TYPE L-1)
REMOVE CAA
REMOVE 163 LF GR

LOCATION 198
PM 28.86 TO 29.00 WB

AILTS
AFTS
650 LF MGS
ES
ETW
ES
REMOVE CAA
REMOVE 738 LF GR
Exist AC DIKE TO REMAIN
REMOVE CAA
OBJECT MARKER (TYPE L-1)

LOCATION 200
PM 29.09 TO 29.26 WB

AFTS
837.5 LF MGS
REMOVE CAA
REMOVE 875 LF GR
Exist AC DIKE TO REMAIN

REMOVE Exist BURIED POST ANCHOR
MGS BURIED POST ANCHOR
OBJECT MARKER (TYPE L-1)
ES
ETW
ES
SEE DETAIL B
THIS SHEET

LOCATION 168
PM 29.25 TO 29.27 EB

REMOVE Exist BURIED POST ANCHOR
MGS BURIED POST ANCHOR
75 LF MGS
REMOVE
125 LF GR
25 LF MGS
PREBENT R=20'
REMOVE CAA
25 LF MGS
MGS END ANCHOR ASSEMBLY
(TYPE SFT)

DETAIL B
NO SCALE

LOCATION 197
PM 28.14 TO 28.79 WB

AILTS
REMOVE CAA
ES
ETW
ES
3,437.5 LF MGS
REMOVE 3,538 LF GR
Exist AC DIKE TO REMAIN
MATCH LINE A-A
MATCH LINE A-A
3,437.5 LF MGS
REMOVE 3,538 LF GR
Exist AC DIKE TO REMAIN
AILTS
REMOVE CAA
ES
ES
ETW

REMOVE Exist
BURIED POST ANCHOR
MGS BURIED POST ANCHOR
OBJECT MARKER (TYPE L-1)
REMOVE 115 LF GR
75 LF MGS
25 LF MGS
PREBENT R=20'
25 LF MGS
REMOVE CAA
MGS END ANCHOR ASSEMBLY
(TYPE SFT)

DETAIL A
NO SCALE

LOCATION 167
PM 28.25 TO 28.27 EB

SEE DETAIL A THIS SHEET

CONSTRUCTION DETAILS
ROUTE 162 (But)
NO SCALE

C-29

STATE OF CALIFORNIA - DEPARTMENT OF TRANSPORTATION
Caltrans®
TRAFFIC

FUNCTIONAL SUPERVISOR: STEPHEN WRIGHT
CALCULATED-DESIGNED BY: AL G. CHIN
CHECKED BY: ERIC SOUZA
REVISED BY
DATE REVISED

LAST REVISION 11-12-13
DATE PLOTTED => 29-MAY-2014
TIME PLOTTED => 08:43

BORDER LAST REVISED 7/2/2010
USERNAME => s130875
DGN FILE => 0300020450ga029.dgn
RELATIVE BORDER SCALE IS IN INCHES 0 1 2 3
UNIT 0399
PROJECT NUMBER & PHASE 03000204501

Dist	COUNTY	ROUTE	POST MILES TOTAL PROJECT	SHEET No.	TOTAL SHEETS
03	But,Col,Gln Sut,Yol,Yub	16,32,45 70,113,162	Var	47	195

2-10-14
REGISTERED CIVIL ENGINEER DATE

ERIC NORMAN SOUZA No. 75706 Exp.06-30-14 CIVIL — REGISTERED PROFESSIONAL ENGINEER — STATE OF CALIFORNIA

2-10-14
PLANS APPROVAL DATE

THE STATE OF CALIFORNIA OR ITS OFFICERS OR AGENTS SHALL NOT BE RESPONSIBLE FOR THE ACCURACY OR COMPLETENESS OF SCANNED COPIES OF THIS PLAN SHEET.

NOTE:

1. FOR ACCURATE RIGHT OF WAY DATA, CONTACT RIGHT OF WAY ENGINEERING AT THE DISTRICT OFFICE.
2. EXISTING UTILITY FACILITIES HAVE NOT BEEN PLOTTED ON THESE PLANS.

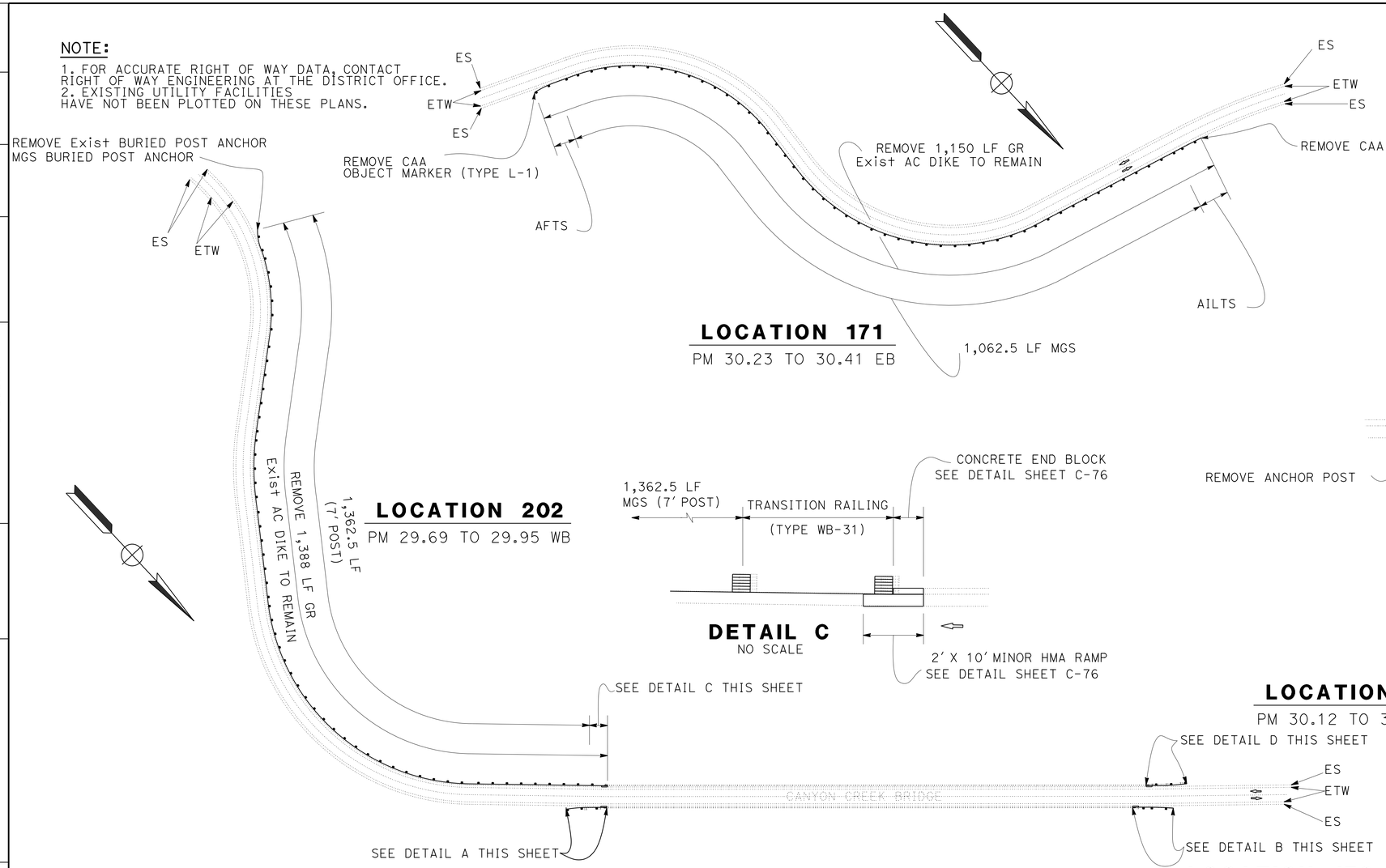

LOCATION 171
PM 30.23 TO 30.41 EB

LOCATION 202
PM 29.69 TO 29.95 WB

LOCATION 203
PM 30.12 TO 30.14 WB

LOCATION 169
PM 29.94 TO 29.96 EB

LOCATION 170
PM 30.12 TO 30.13 EB

DETAIL C
NO SCALE

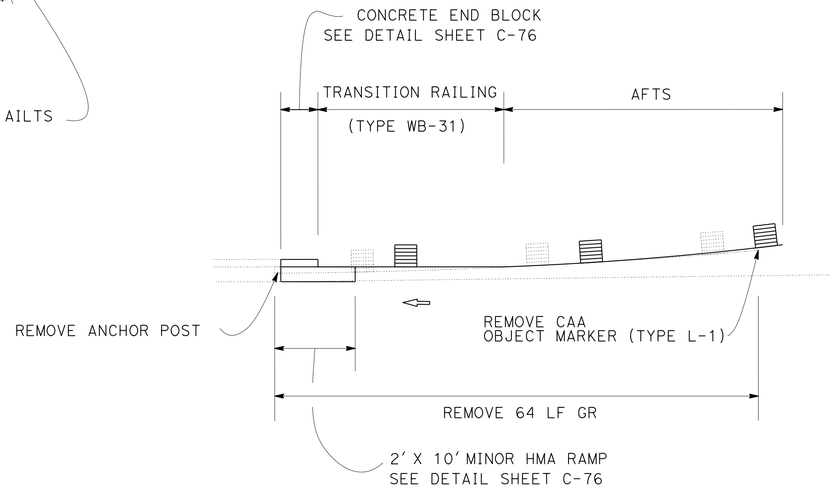

DETAIL D
NO SCALE

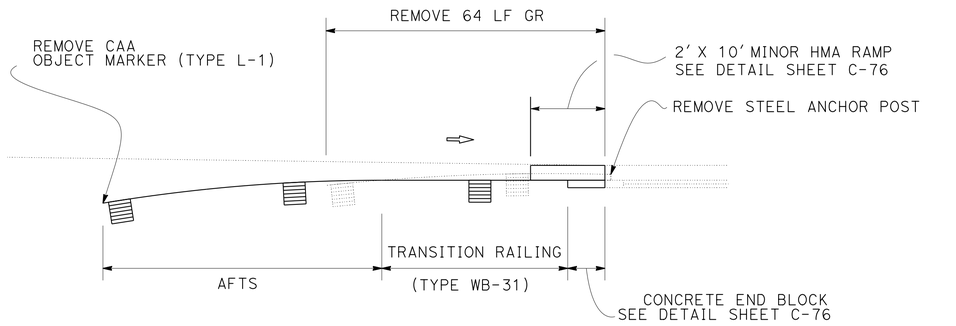

DETAIL A
NO SCALE

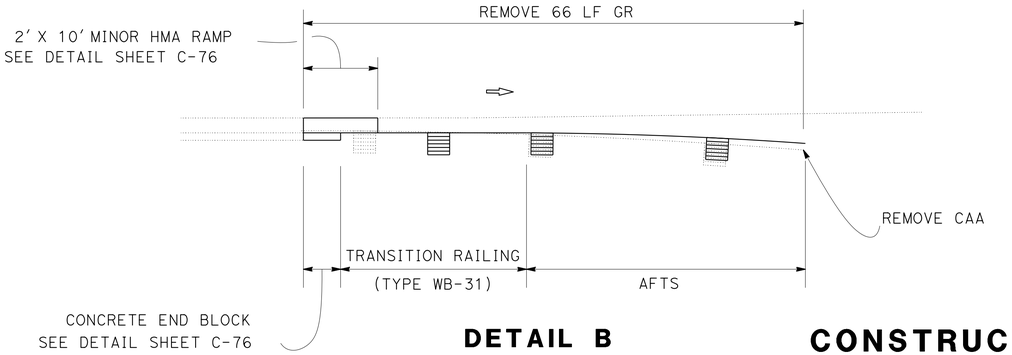

DETAIL B
NO SCALE

CONSTRUCTION DETAILS
ROUTE 162 (But)
NO SCALE

C-30

AL G. CHIN — CALCULATED-DESIGNED BY
ERIC SOUZA — CHECKED BY
REVISED BY — DATE REVISED
FUNCTIONAL SUPERVISOR: STEPHEN WRIGHT
STATE OF CALIFORNIA - DEPARTMENT OF TRANSPORTATION
TRAFFIC
Caltrans®

LAST REVISION 10-11-13 | DATE PLOTTED => 29-MAY-2014 | TIME PLOTTED => 08:43

BORDER LAST REVISED 7/2/2010 | USERNAME => s130875 | DGN FILE => 0300020450ga030.dgn | RELATIVE BORDER SCALE IS IN INCHES 0 1 2 3 | UNIT 0399 | PROJECT NUMBER & PHASE 03000204501

Dist	COUNTY	ROUTE	POST MILES TOTAL PROJECT	SHEET No.	TOTAL SHEETS
03	But,Col,Gln Sut,Yol,Yub	16,32,45 70,113,162	Var	48	195

REGISTERED CIVIL ENGINEER — DATE 2-10-14

PLANS APPROVAL DATE 2-10-14

REGISTERED PROFESSIONAL ENGINEER — ERIC NORMAN SOUZA — No. 75706 — Exp. 06-30-14 — CIVIL — STATE OF CALIFORNIA

THE STATE OF CALIFORNIA OR ITS OFFICERS OR AGENTS SHALL NOT BE RESPONSIBLE FOR THE ACCURACY OR COMPLETENESS OF SCANNED COPIES OF THIS PLAN SHEET.

NOTE:

1. FOR ACCURATE RIGHT OF WAY DATA, CONTACT RIGHT OF WAY ENGINEERING AT THE DISTRICT OFFICE.
2. EXISTING UTILITY FACILITIES HAVE NOT BEEN PLOTTED ON THESE PLANS.

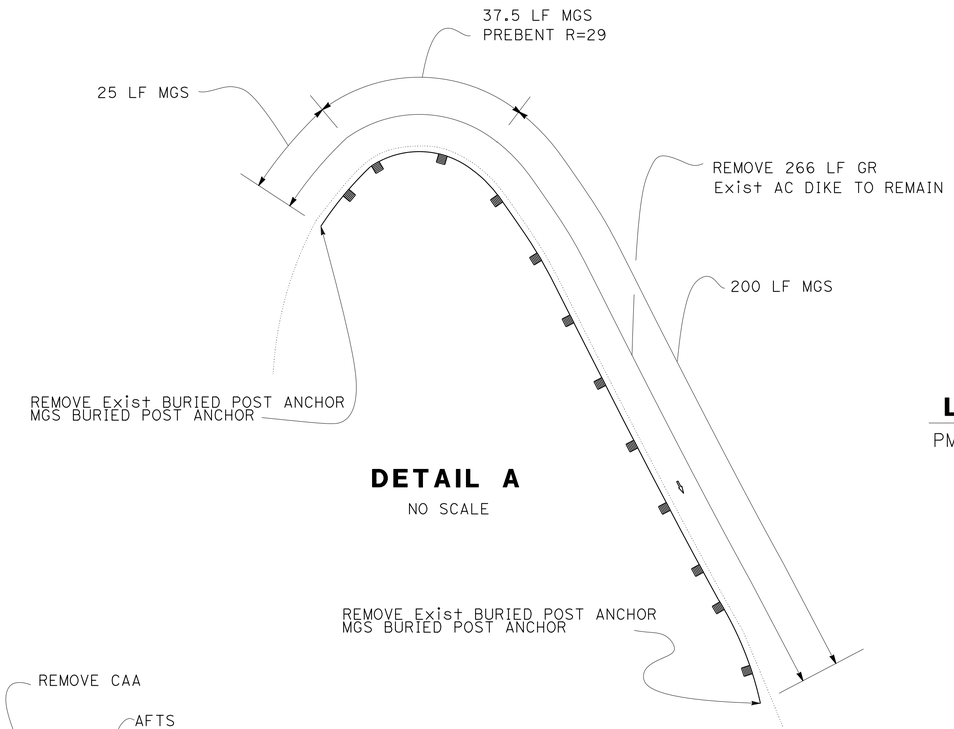

DETAIL A
NO SCALE

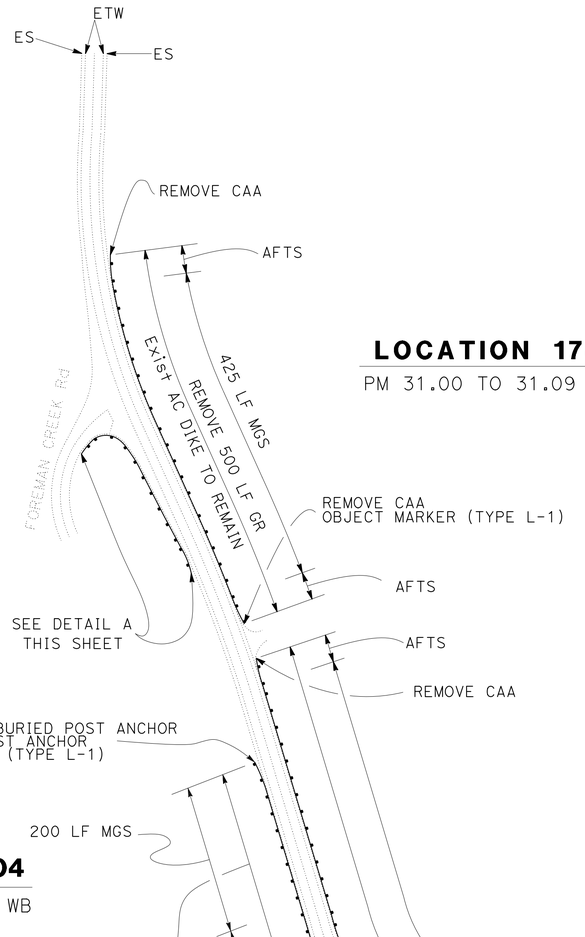

LOCATION 174
PM 31.00 TO 31.09 EB

LOCATION 205
PM 30.98 TO 31.02 WB

LOCATION 204
PM 30.88 TO 30.92 WB

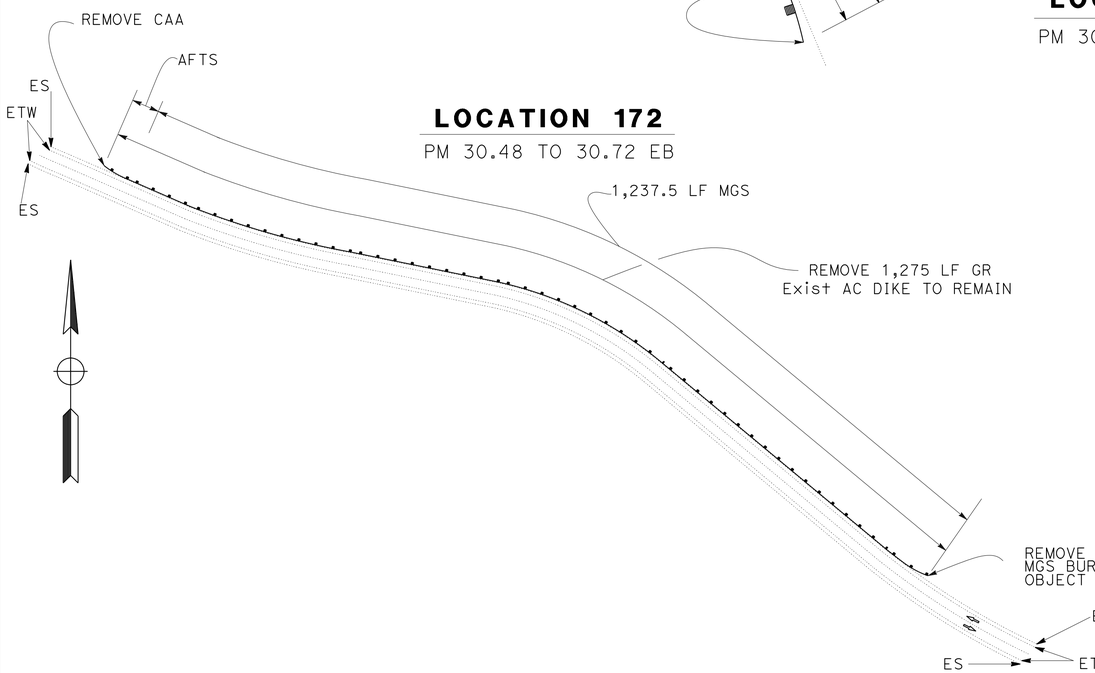

LOCATION 172
PM 30.48 TO 30.72 EB

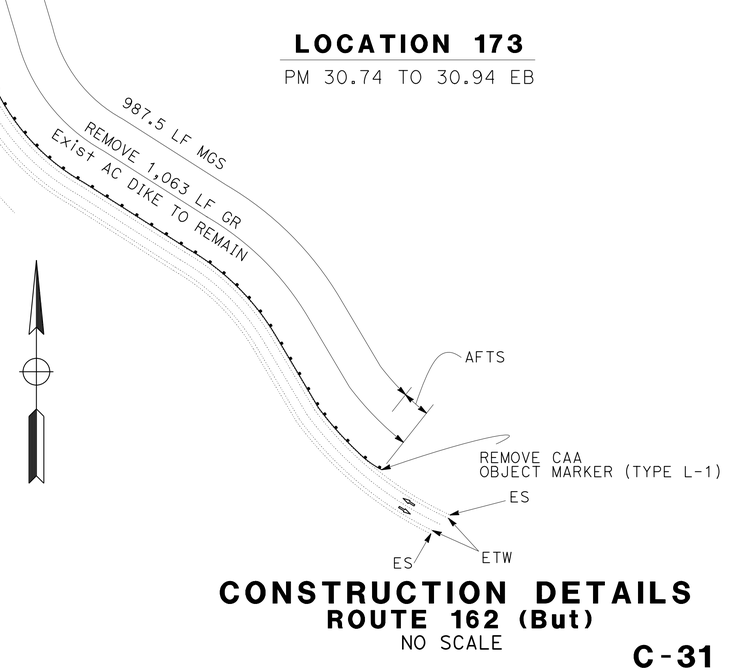

LOCATION 173
PM 30.74 TO 30.94 EB

CONSTRUCTION DETAILS
ROUTE 162 (But)
NO SCALE

C-31

LAST REVISION: DATE PLOTTED => 29-MAY-2014
10-11-13 TIME PLOTTED => 08:43

STATE OF CALIFORNIA - DEPARTMENT OF TRANSPORTATION
Caltrans®
TRAFFIC

FUNCTIONAL SUPERVISOR: STEPHEN WRIGHT

CALCULATED-DESIGNED BY: AL G. CHIN
CHECKED BY: ERIC SOUZA

REVISED BY | DATE REVISED

BORDER LAST REVISED 7/2/2010

USERNAME => s130875
DGN FILE => 0300020450ga031.dgn

RELATIVE BORDER SCALE IS IN INCHES 0 1 2 3

UNIT 0399

PROJECT NUMBER & PHASE 03000204501

Dist	COUNTY	ROUTE	POST MILES TOTAL PROJECT	SHEET No.	TOTAL SHEETS
03	But,Col,Gln Sut,Yol,Yub	16,32,45 70,113,162	Var	49	195

2-10-14
REGISTERED CIVIL ENGINEER DATE

2-10-14
PLANS APPROVAL DATE

REGISTERED PROFESSIONAL ENGINEER
ERIC NORMAN SOUZA
No. 75706
Exp. 06-30-14
CIVIL
STATE OF CALIFORNIA

THE STATE OF CALIFORNIA OR ITS OFFICERS OR AGENTS SHALL NOT BE RESPONSIBLE FOR THE ACCURACY OR COMPLETENESS OF SCANNED COPIES OF THIS PLAN SHEET.

NOTE:

1. FOR ACCURATE RIGHT OF WAY DATA, CONTACT RIGHT OF WAY ENGINEERING AT THE DISTRICT OFFICE.
2. EXISTING UTILITY FACILITIES HAVE NOT BEEN PLOTTED ON THESE PLANS.

LOCATION 206

PM 3.15 TO R3.35 EB

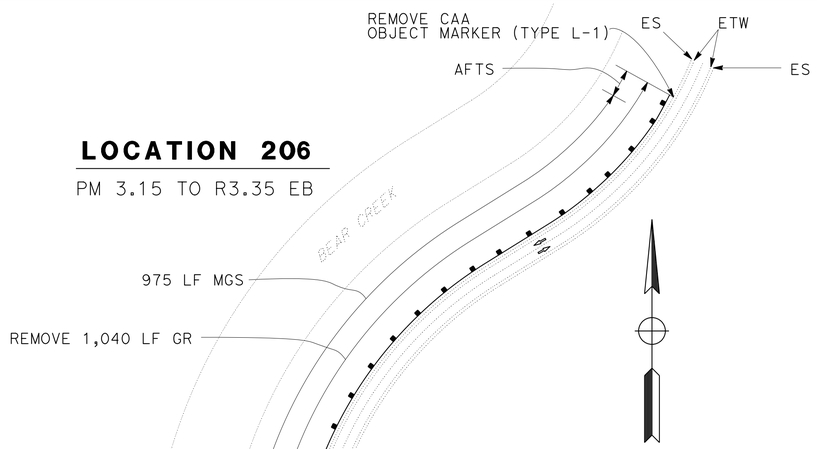

LOCATION 207

PM R3.36 TO R3.37 EB

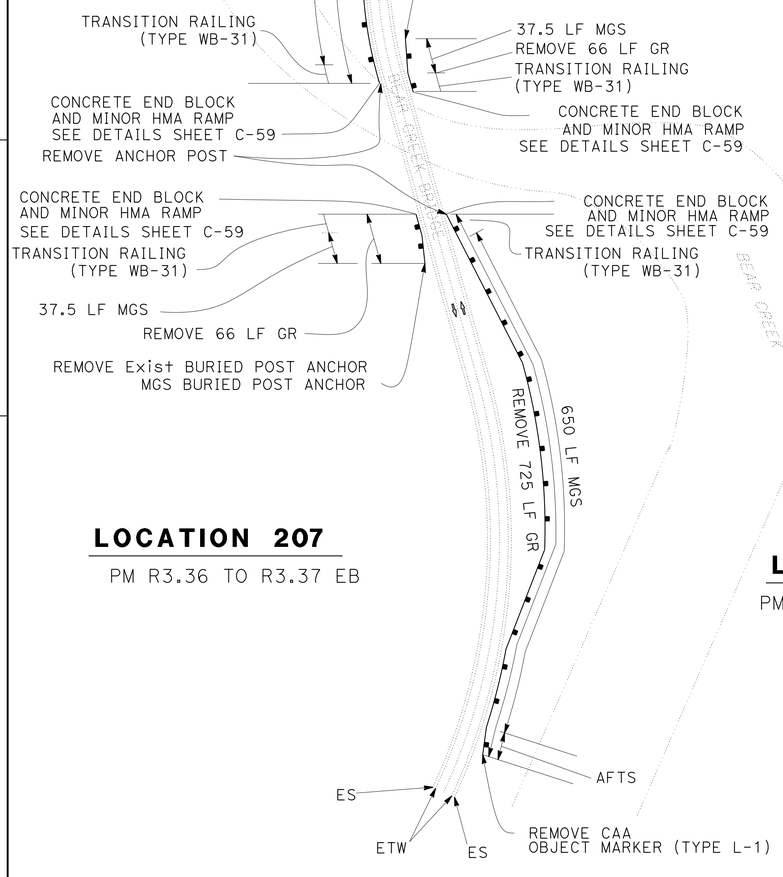

LOCATION 218

PM R3.34 TO R3.35 WB

LOCATION 219

PM R3.36 TO R3.50 WB

LOCATION 208

PM 3.60 TO 3.67 EB

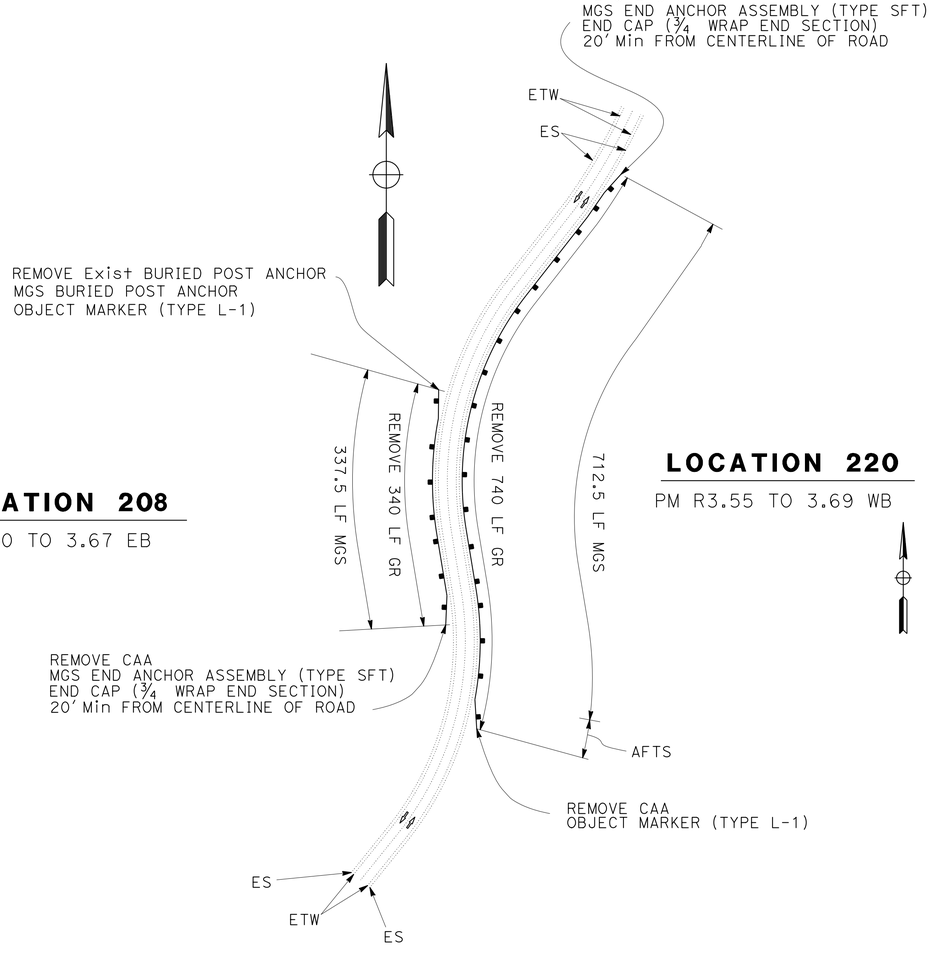

LOCATION 220

PM R3.55 TO 3.69 WB

CONSTRUCTION DETAILS

ROUTE 16 (Col)

NO SCALE

C-32

STATE OF CALIFORNIA - DEPARTMENT OF TRANSPORTATION
Caltrans®
TRAFFIC

FUNCTIONAL SUPERVISOR: STEPHEN WRIGHT
CALCULATED-DESIGNED BY: AL G. CHIN
CHECKED BY: ERIC SOUZA
REVISED BY
DATE REVISED

LAST REVISION 11-12-13
DATE PLOTTED => 29-MAY-2014
TIME PLOTTED => 08:43

BORDER LAST REVISED 7/2/2010
USERNAME => s130875
DGN FILE => 0300020450ga032.dgn
RELATIVE BORDER SCALE IS IN INCHES 0 1 2 3
UNIT 0399
PROJECT NUMBER & PHASE 03000204501

Dist	COUNTY	ROUTE	POST MILES TOTAL PROJECT	SHEET No.	TOTAL SHEETS
03	But,Col,Gln Sut,Yol,Yub	16,32,45 70,113,162	Var	50	195

REGISTERED CIVIL ENGINEER — 2-10-14 DATE

2-10-14
PLANS APPROVAL DATE

REGISTERED PROFESSIONAL ENGINEER
ERIC NORMAN SOUZA
No. 75706
Exp. 06-30-14
CIVIL
STATE OF CALIFORNIA

THE STATE OF CALIFORNIA OR ITS OFFICERS OR AGENTS SHALL NOT BE RESPONSIBLE FOR THE ACCURACY OR COMPLETENESS OF SCANNED COPIES OF THIS PLAN SHEET.

NOTE:

1. FOR ACCURATE RIGHT OF WAY DATA, CONTACT RIGHT OF WAY ENGINEERING AT THE DISTRICT OFFICE.
2. EXISTING UTILITY FACILITIES HAVE NOT BEEN PLOTTED ON THESE PLANS.

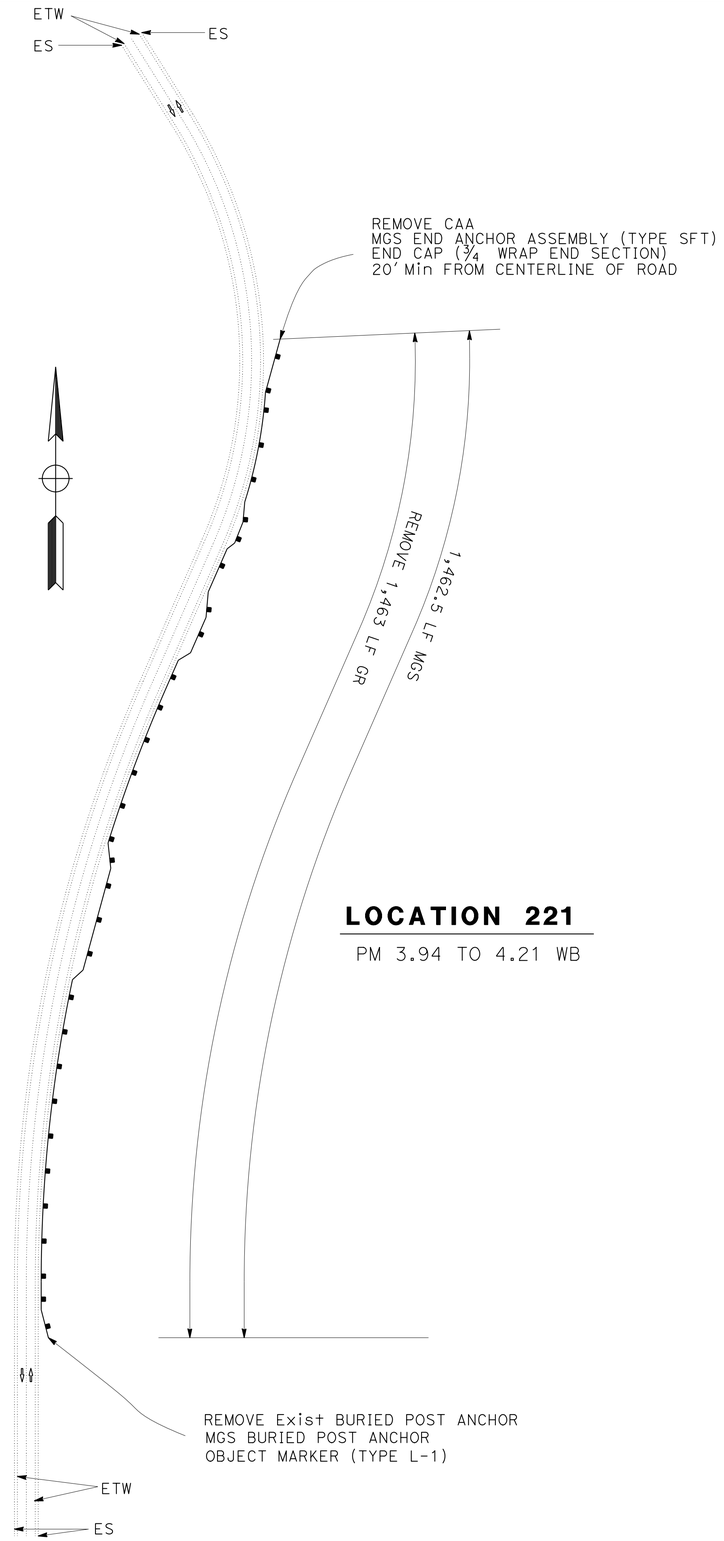

LOCATION 210

PM R4.39 TO R4.40 EB

LOCATION 221

PM 3.94 TO 4.21 WB

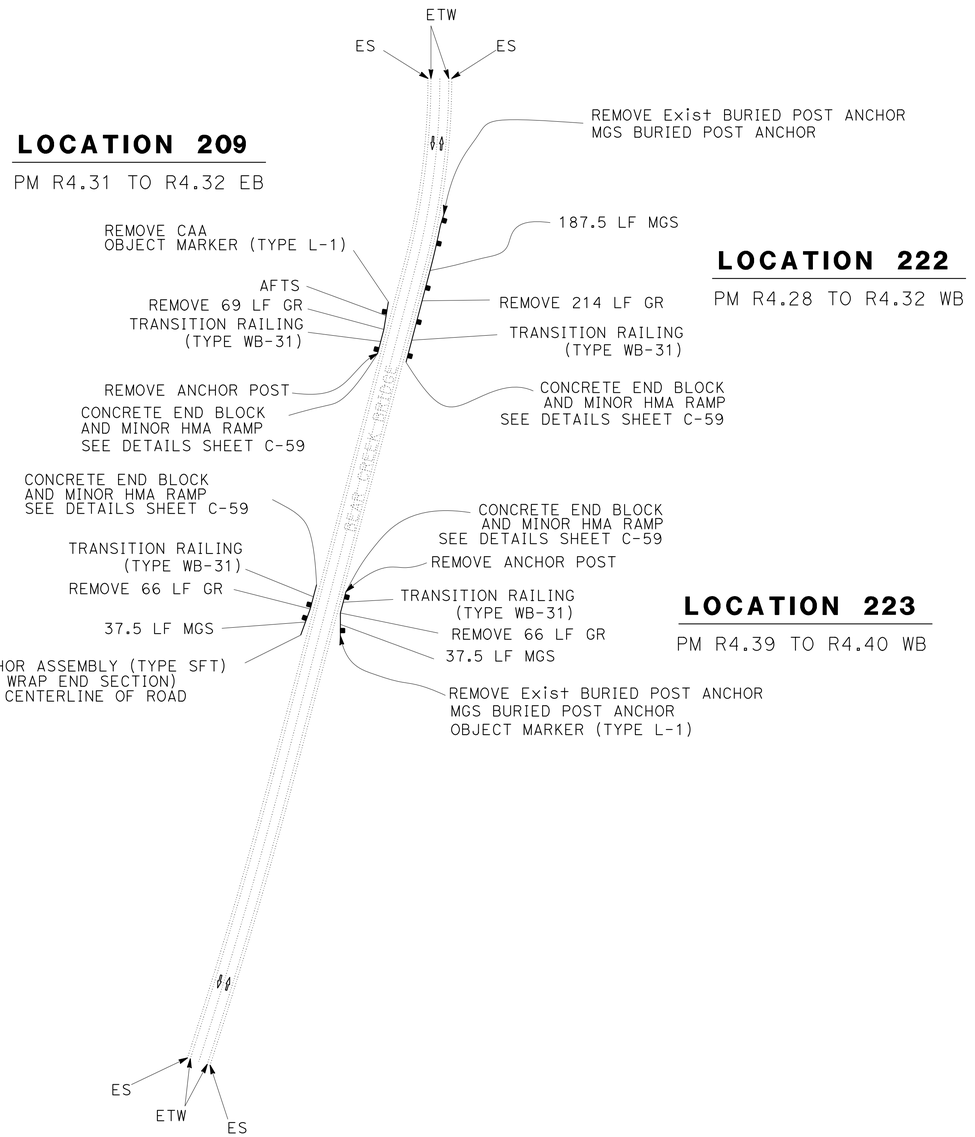

LOCATION 222

PM R4.28 TO R4.32 WB

LOCATION 223

PM R4.39 TO R4.40 WB

CONSTRUCTION DETAILS
ROUTE 16 (Col)

NO SCALE

C-33

CALCULATED-DESIGNED BY	AL G. CHIN
CHECKED BY	ERIC SOUZA
REVISED BY	
DATE REVISED	
FUNCTIONAL SUPERVISOR	STEPHEN WRIGHT
STATE OF CALIFORNIA - DEPARTMENT OF TRANSPORTATION	TRAFFIC
Caltrans	

LAST REVISION 11-12-13
DATE PLOTTED => 29-MAY-2014
TIME PLOTTED => 08:43

BORDER LAST REVISED 7/2/2010 | USERNAME => s130875 | DGN FILE => 0300020450ga033.dgn | RELATIVE BORDER SCALE IS IN INCHES 0 1 2 3 | UNIT 0399 | PROJECT NUMBER & PHASE 03000204501

Dist	COUNTY	ROUTE	POST MILES TOTAL PROJECT	SHEET No.	TOTAL SHEETS
03	But,Col,Gln Sut,Yol,Yub	16,32,45 70,113,162	Var	51	195

REGISTERED CIVIL ENGINEER 2-10-14 DATE

PLANS APPROVAL DATE 2-10-14

REGISTERED PROFESSIONAL ENGINEER ERIC NORMAN SOUZA No. 75706 Exp. 06-30-14 CIVIL STATE OF CALIFORNIA

THE STATE OF CALIFORNIA OR ITS OFFICERS OR AGENTS SHALL NOT BE RESPONSIBLE FOR THE ACCURACY OR COMPLETENESS OF SCANNED COPIES OF THIS PLAN SHEET.

NOTE:

1. FOR ACCURATE RIGHT OF WAY DATA, CONTACT RIGHT OF WAY ENGINEERING AT THE DISTRICT OFFICE.
2. EXISTING UTILITY FACILITIES HAVE NOT BEEN PLOTTED ON THESE PLANS.

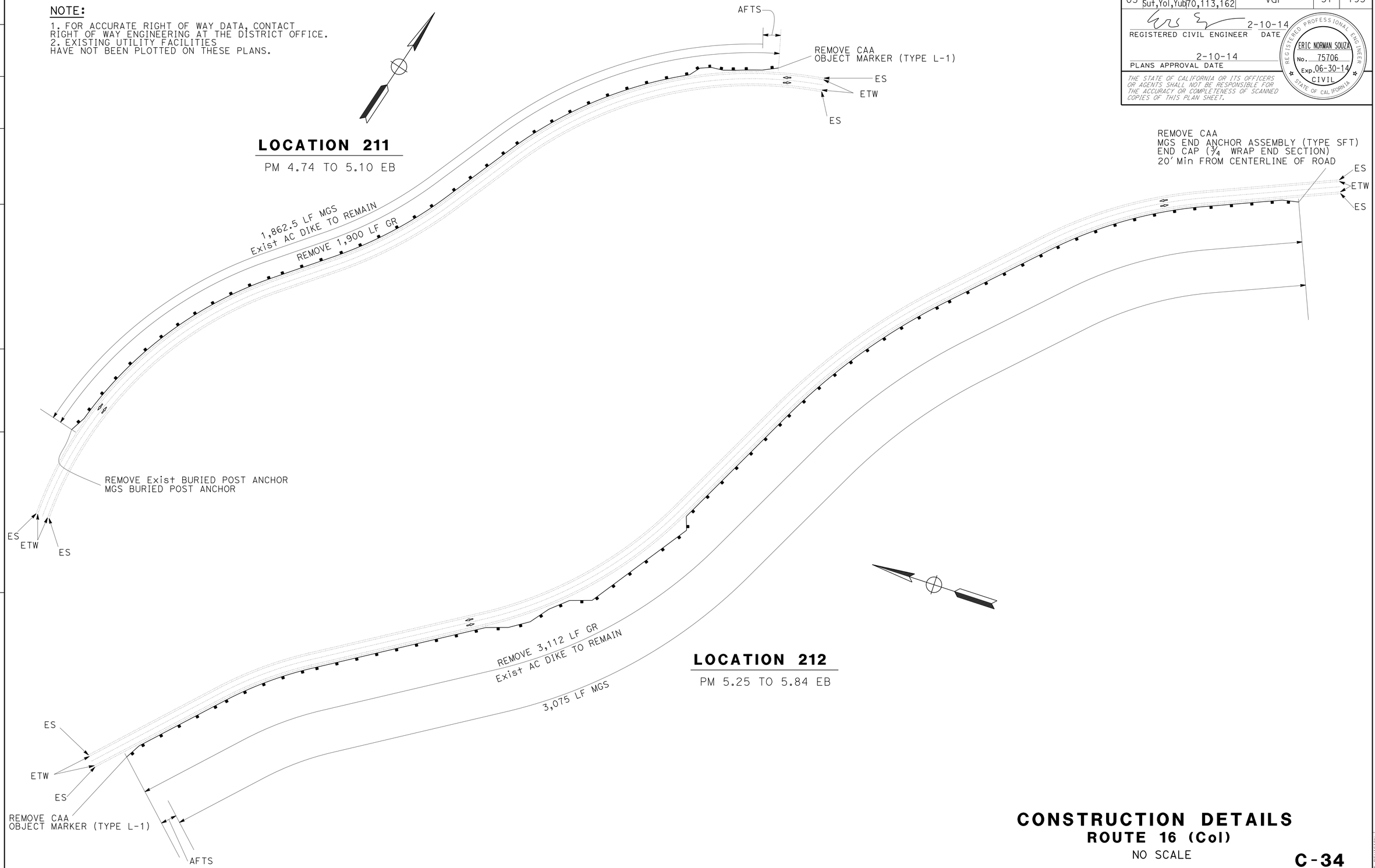

LOCATION 211

PM 4.74 TO 5.10 EB

LOCATION 212

PM 5.25 TO 5.84 EB

CONSTRUCTION DETAILS

ROUTE 16 (Col)

NO SCALE

C-34

STATE OF CALIFORNIA - DEPARTMENT OF TRANSPORTATION

Caltrans

TRAFFIC

FUNCTIONAL SUPERVISOR: STEPHEN WRIGHT

CALCULATED-DESIGNED BY: AL G. CHIN

CHECKED BY: ERIC SOUZA

REVISED BY

DATE REVISED

LAST REVISION 11-12-13

DATE PLOTTED => 29-MAY-2014

TIME PLOTTED => 08:43

Dist	COUNTY	ROUTE	POST MILES TOTAL PROJECT	SHEET No.	TOTAL SHEETS
03	But,Col,Gln Sut,Yol,Yub	16,32,45 70,113,162	Var	52	195

REGISTERED CIVIL ENGINEER — DATE: 2-10-14

PLANS APPROVAL DATE: 2-10-14

REGISTERED PROFESSIONAL ENGINEER — ERIC NORMAN SOUZA — No. 75706 — Exp. 06-30-14 — CIVIL — STATE OF CALIFORNIA

THE STATE OF CALIFORNIA OR ITS OFFICERS OR AGENTS SHALL NOT BE RESPONSIBLE FOR THE ACCURACY OR COMPLETENESS OF SCANNED COPIES OF THIS PLAN SHEET.

NOTE:

1. FOR ACCURATE RIGHT OF WAY DATA, CONTACT RIGHT OF WAY ENGINEERING AT THE DISTRICT OFFICE.
2. EXISTING UTILITY FACILITIES HAVE NOT BEEN PLOTTED ON THESE PLANS.

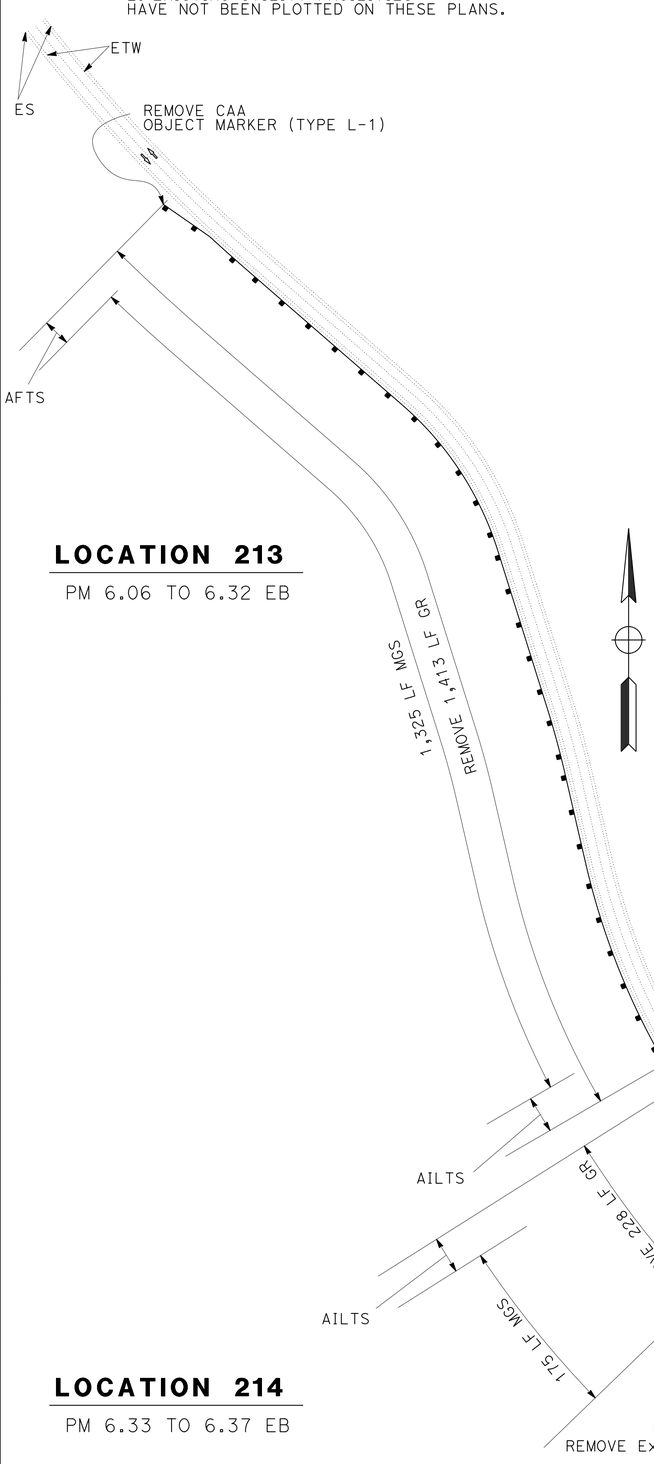

LOCATION 213

PM 6.06 TO 6.32 EB

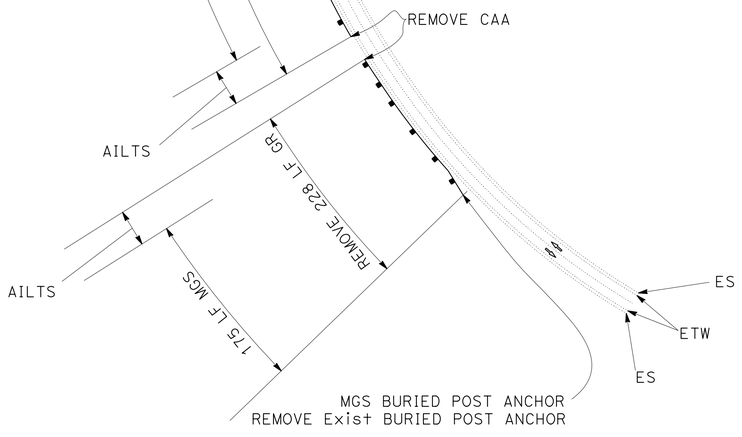

LOCATION 214

PM 6.33 TO 6.37 EB

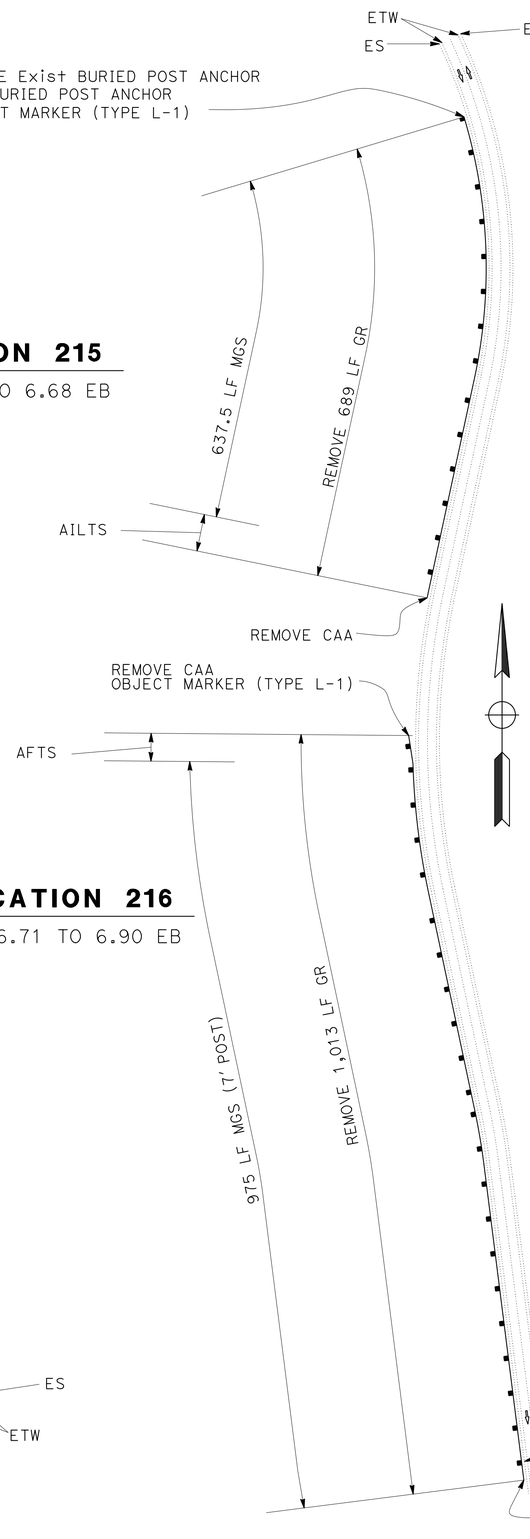

LOCATION 215

PM 6.56 TO 6.68 EB

LOCATION 216

PM 6.71 TO 6.90 EB

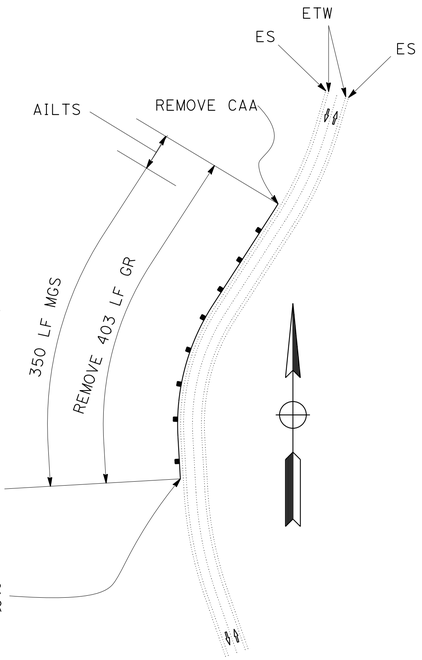

LOCATION 217

PM 7.18 TO 7.26 EB

REMOVE CAA
MGS END ANCHOR ASSEMBLY (TYPE SFT)
END CAP (¾ WRAP END SECTION)
20' Min FROM CENTERLINE OF ROAD

CONSTRUCTION DETAILS
ROUTE 16 (Col)

NO SCALE

C-35

REVISED BY	DATE REVISED

CALCULATED-DESIGNED BY: AL G. CHIN
CHECKED BY: ERIC SOUZA
FUNCTIONAL SUPERVISOR: STEPHEN WRIGHT

STATE OF CALIFORNIA - DEPARTMENT OF TRANSPORTATION
Caltrans®
TRAFFIC

LAST REVISION: 11-12-13
DATE PLOTTED => 29-MAY-2014
TIME PLOTTED => 08:43

BORDER LAST REVISED 7/2/2010

USERNAME => s130875
DGN FILE => 0300020450ga035.dgn

RELATIVE BORDER SCALE IS IN INCHES: 0 1 2 3

UNIT 0399 | PROJECT NUMBER & PHASE | 03000204501

Dist	COUNTY	ROUTE	POST MILES TOTAL PROJECT	SHEET No.	TOTAL SHEETS
03	But,Col,Gln Sut,Yol,Yub	16,32,45 70,113,162	Var	53	195

REGISTERED CIVIL ENGINEER — DATE 2-10-14

PLANS APPROVAL DATE 2-10-14

REGISTERED PROFESSIONAL ENGINEER — ERIC NORMAN SOUZA No. 75706 Exp. 06-30-14 CIVIL — STATE OF CALIFORNIA

THE STATE OF CALIFORNIA OR ITS OFFICERS OR AGENTS SHALL NOT BE RESPONSIBLE FOR THE ACCURACY OR COMPLETENESS OF SCANNED COPIES OF THIS PLAN SHEET.

NOTE:

1. FOR ACCURATE RIGHT OF WAY DATA, CONTACT RIGHT OF WAY ENGINEERING AT THE DISTRICT OFFICE.
2. EXISTING UTILITY FACILITIES HAVE NOT BEEN PLOTTED ON THESE PLANS.

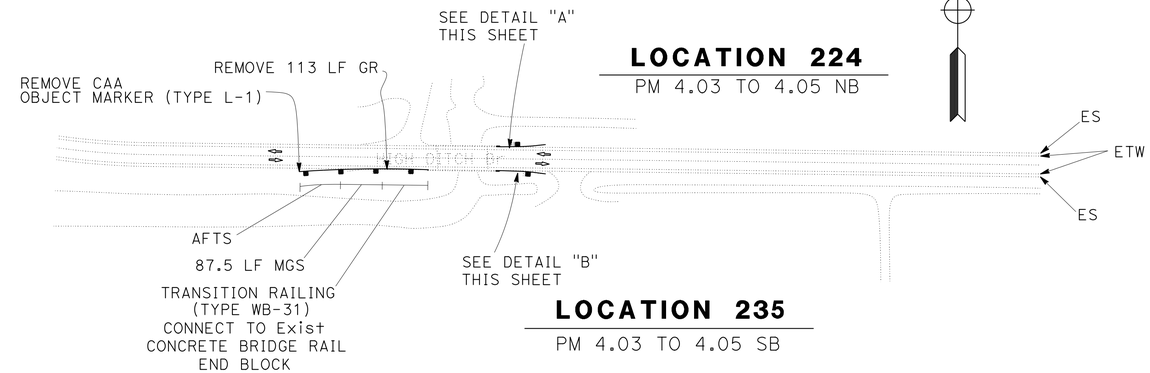

LOCATION 224
PM 4.03 TO 4.05 NB

LOCATION 235
PM 4.03 TO 4.05 SB

LOCATION 236
PM 4.06 TO 4.08 SB

REMOVE GR

LOCATION	LF
224	65
235	63

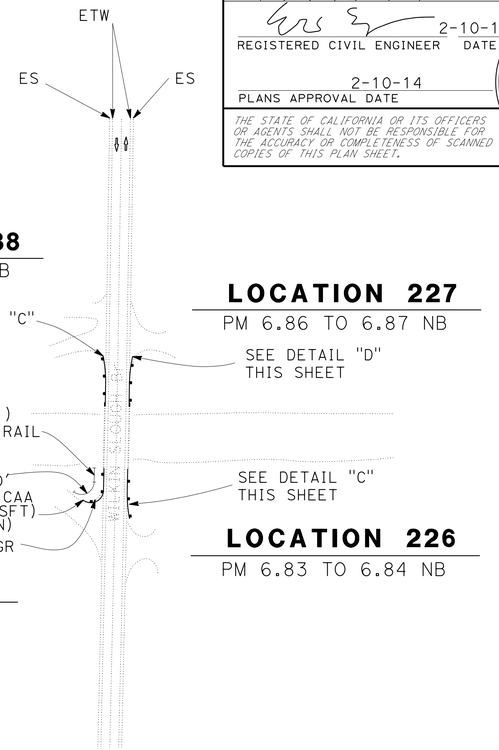

LOCATION 238
PM 6.86 TO 6.87 SB

LOCATION 227
PM 6.86 TO 6.87 NB

LOCATION 237
PM 6.83 TO 6.84 SB

LOCATION 226
PM 6.83 TO 6.84 NB

REMOVE GR

LOCATION	LF
226	63
227	64
238	63

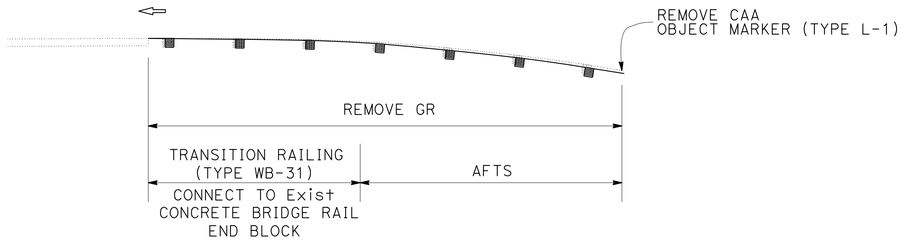

DETAIL "A"
NO SCALE

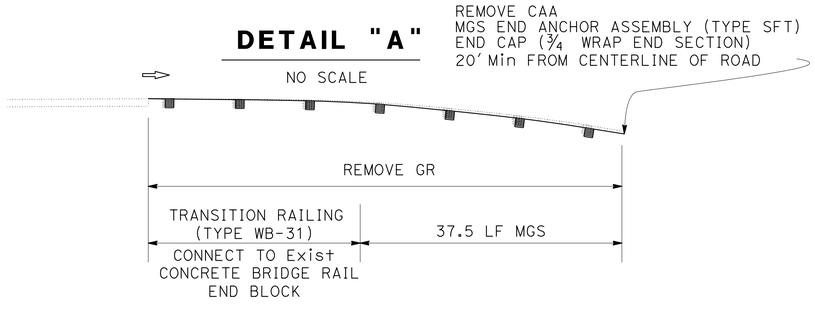

DETAIL "B"
NO SCALE

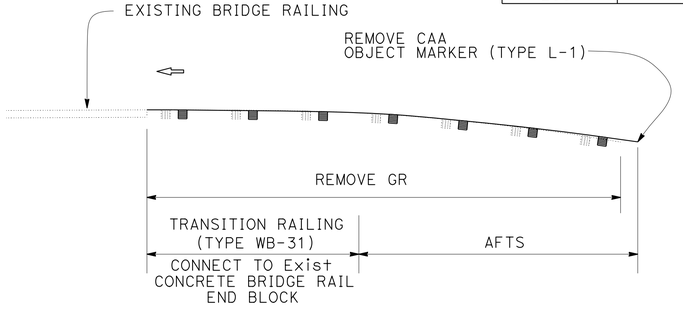

DETAIL "C"
NO SCALE

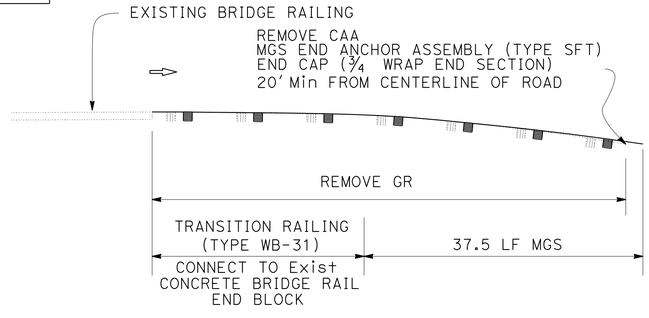

DETAIL "D"
NO SCALE

CONSTRUCTION DETAILS
ROUTE 45 (Col)
NO SCALE

C-36

STATE OF CALIFORNIA - DEPARTMENT OF TRANSPORTATION — TRAFFIC — Caltrans
FUNCTIONAL SUPERVISOR: STEPHEN WRIGHT
CALCULATED-DESIGNED BY: ANDY LUU
CHECKED BY: ERIC SOUZA
REVISED BY | DATE REVISED

LAST REVISION 11-12-13 | DATE PLOTTED => 29-MAY-2014 | TIME PLOTTED => 10:45

BORDER LAST REVISED 7/2/2010 | USERNAME => s130875 | DGN FILE => 0300020450ga036.dgn | RELATIVE BORDER SCALE IS IN INCHES 0 1 2 3 | UNIT 0399 | PROJECT NUMBER & PHASE 03000204501

Dist	COUNTY	ROUTE	POST MILES TOTAL PROJECT	SHEET No.	TOTAL SHEETS
03	But,Col,Gln Sut,Yol,Yub	16,32,45 70,113,162	Var	54	195

REGISTERED CIVIL ENGINEER 2-10-14 DATE

PLANS APPROVAL DATE 2-10-14

REGISTERED PROFESSIONAL ENGINEER ERIC NORMAN SOUZA No. 75706 Exp. 06-30-14 CIVIL STATE OF CALIFORNIA

THE STATE OF CALIFORNIA OR ITS OFFICERS OR AGENTS SHALL NOT BE RESPONSIBLE FOR THE ACCURACY OR COMPLETENESS OF SCANNED COPIES OF THIS PLAN SHEET.

NOTE:

1. FOR ACCURATE RIGHT OF WAY DATA, CONTACT RIGHT OF WAY ENGINEERING AT THE DISTRICT OFFICE.
2. EXISTING UTILITY FACILITIES HAVE NOT BEEN PLOTTED ON THESE PLANS.

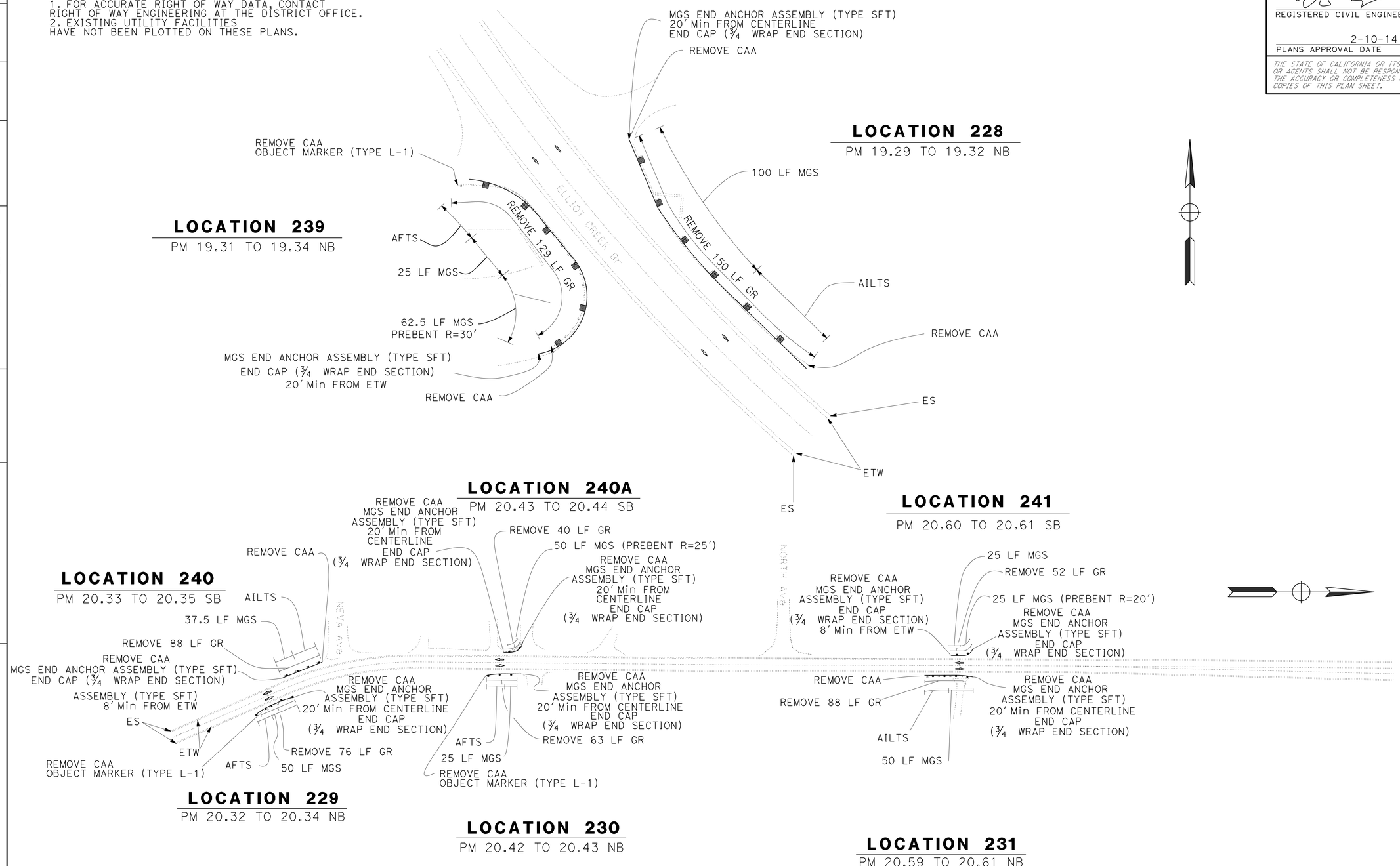

CONSTRUCTION DETAILS
ROUTE 45 (Col)
NO SCALE

C-37

STATE OF CALIFORNIA - DEPARTMENT OF TRANSPORTATION
Caltrans
TRAFFIC

FUNCTIONAL SUPERVISOR: STEPHEN WRIGHT
CALCULATED-DESIGNED BY: ANDY LUU
CHECKED BY: ERIC SOUZA
REVISED BY
DATE REVISED

LAST REVISION 11-12-13
DATE PLOTTED => 29-MAY-2014
TIME PLOTTED => 08:43

BORDER LAST REVISED 7/2/2010
USERNAME => s130875
DGN FILE => 0300020450ga037.dgn
RELATIVE BORDER SCALE IS IN INCHES 0 1 2 3
UNIT 0399
PROJECT NUMBER & PHASE 03000204501

Dist	COUNTY	ROUTE	POST MILES TOTAL PROJECT	SHEET No.	TOTAL SHEETS
03	But,Col,Gln Sut,Yol,Yub	16,32,45 70,113,162	Var	55	195

2-10-14
REGISTERED CIVIL ENGINEER DATE

REGISTERED PROFESSIONAL ENGINEER
ERIC NORMAN SOUZA
No. 75706
Exp. 06-30-14
CIVIL
STATE OF CALIFORNIA

2-10-14
PLANS APPROVAL DATE

THE STATE OF CALIFORNIA OR ITS OFFICERS OR AGENTS SHALL NOT BE RESPONSIBLE FOR THE ACCURACY OR COMPLETENESS OF SCANNED COPIES OF THIS PLAN SHEET.

NOTE:

1. FOR ACCURATE RIGHT OF WAY DATA, CONTACT RIGHT OF WAY ENGINEERING AT THE DISTRICT OFFICE.
2. EXISTING UTILITY FACILITIES HAVE NOT BEEN PLOTTED ON THESE PLANS.

LOCATION 232
PM 21.32 TO 21.33 NB

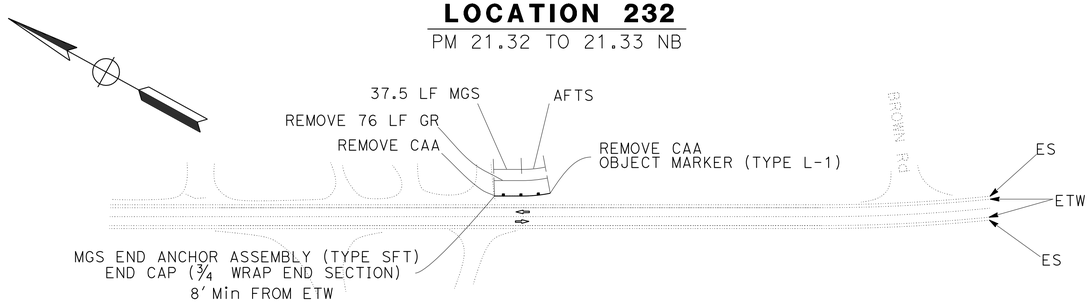

LOCATION 242
PM R21.91 TO R21.94 SB

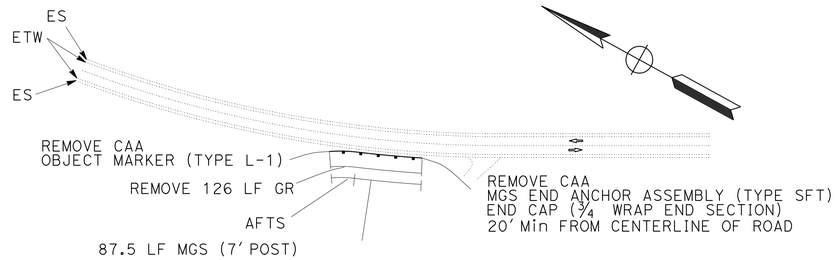

LOCATION 232A
PM 25.00 TO 25.02 NB

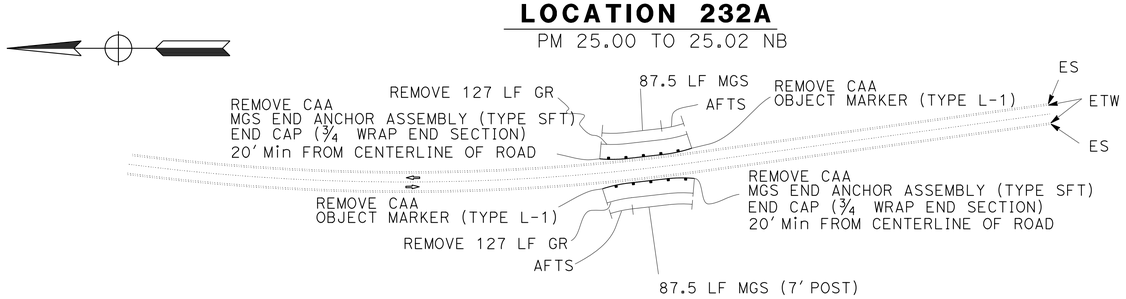

LOCATION 242A
PM 25.00 TO 25.02 SB

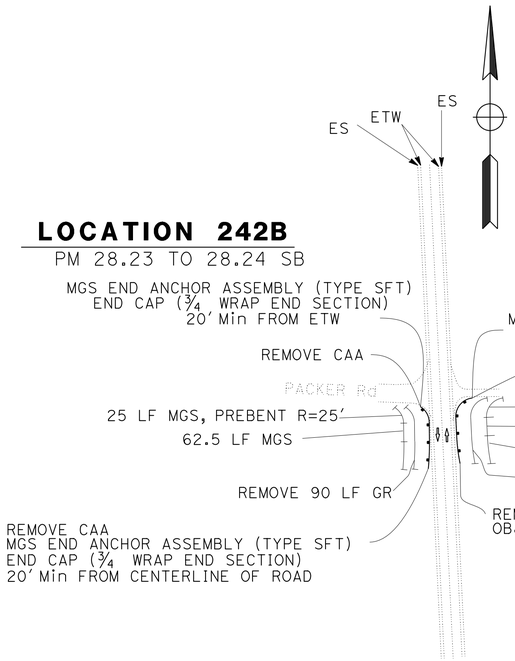

LOCATION 242B
PM 28.23 TO 28.24 SB

LOCATION 233
PM 28.23 TO 28.24 NB

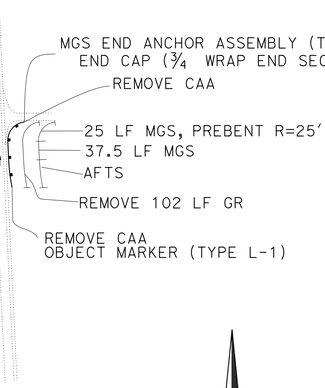

LOCATION 242C
PM 28.90 TO 28.92 SB

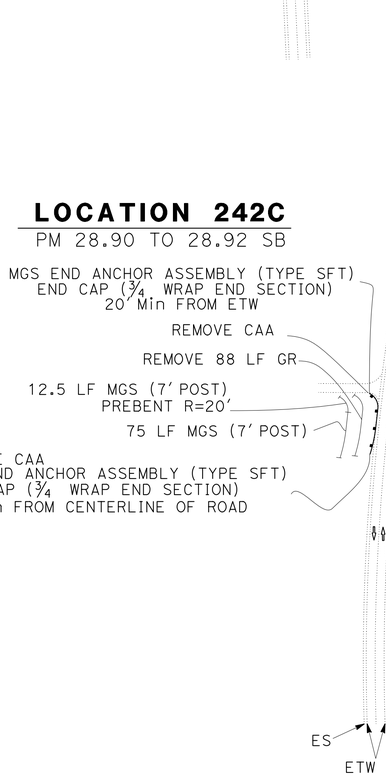

LOCATION 234
PM 28.90 TO 28.91 NB

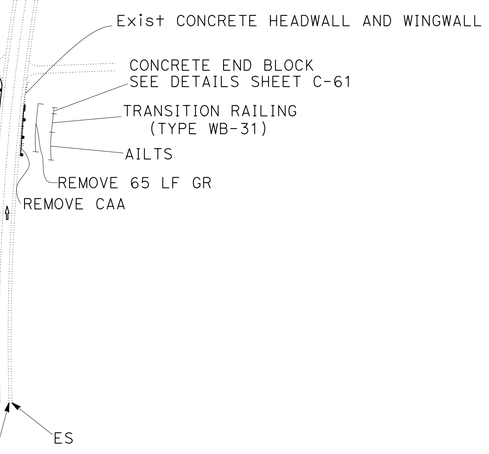

CONSTRUCTION DETAILS
ROUTE 45 (Col)
NO SCALE

C-38

REVISED BY | DATE REVISED
ANDY LUU | ERIC SOUZA
CALCULATED-DESIGNED BY | CHECKED BY
FUNCTIONAL SUPERVISOR: STEPHEN WRIGHT

STATE OF CALIFORNIA - DEPARTMENT OF TRANSPORTATION
Caltrans®
TRAFFIC

LAST REVISION 11-12-13
DATE PLOTTED => 29-MAY-2014
TIME PLOTTED => 08:43

BORDER LAST REVISED 7/2/2010 | USERNAME => s130875 | DGN FILE => 0300020450ga038.dgn | RELATIVE BORDER SCALE IS IN INCHES 0 1 2 3 | UNIT 0399 | PROJECT NUMBER & PHASE 03000204501

Dist	COUNTY	ROUTE	POST MILES TOTAL PROJECT	SHEET No.	TOTAL SHEETS
03	But,Col,Gln Sut,Yol,Yub	16,32,45 70,113,162	Var	56	195

REGISTERED CIVIL ENGINEER — DATE 2-10-14

PLANS APPROVAL DATE 2-10-14

ERIC NORMAN SOUZA No. 75706 Exp. 06-30-14 CIVIL — REGISTERED PROFESSIONAL ENGINEER — STATE OF CALIFORNIA

THE STATE OF CALIFORNIA OR ITS OFFICERS OR AGENTS SHALL NOT BE RESPONSIBLE FOR THE ACCURACY OR COMPLETENESS OF SCANNED COPIES OF THIS PLAN SHEET.

NOTE:

1. FOR ACCURATE RIGHT OF WAY DATA, CONTACT RIGHT OF WAY ENGINEERING AT THE DISTRICT OFFICE.
2. EXISTING UTILITY FACILITIES HAVE NOT BEEN PLOTTED ON THESE PLANS.
3. LOCATIONS 234A, 234B, 234C, 242D, 242E AND 242F ARE ON COLUSA ROUTE 45. LOCATIONS 245 AND 248 ARE ON YUBA ROUTE 70.

LOCATION 242D
PM 30.24 TO 30.25 SB

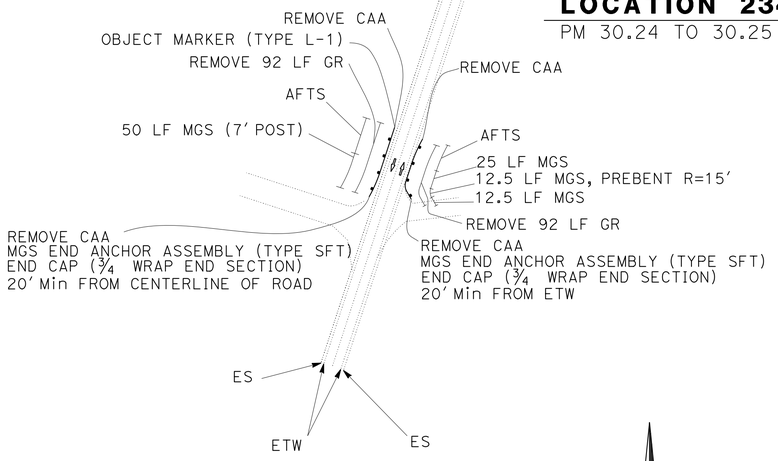

LOCATION 234A
PM 30.24 TO 30.25 NB

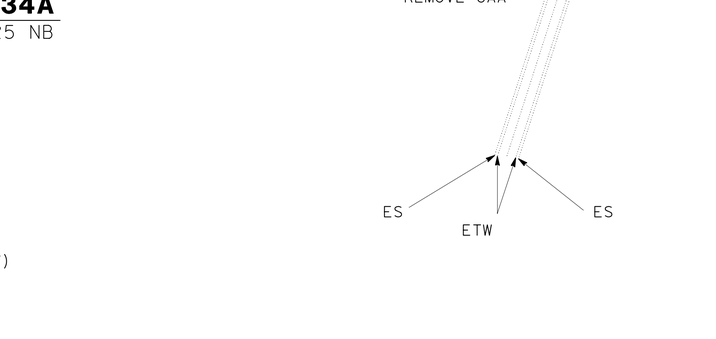

LOCATION 242F
PM 31.23 TO 31.25 SB

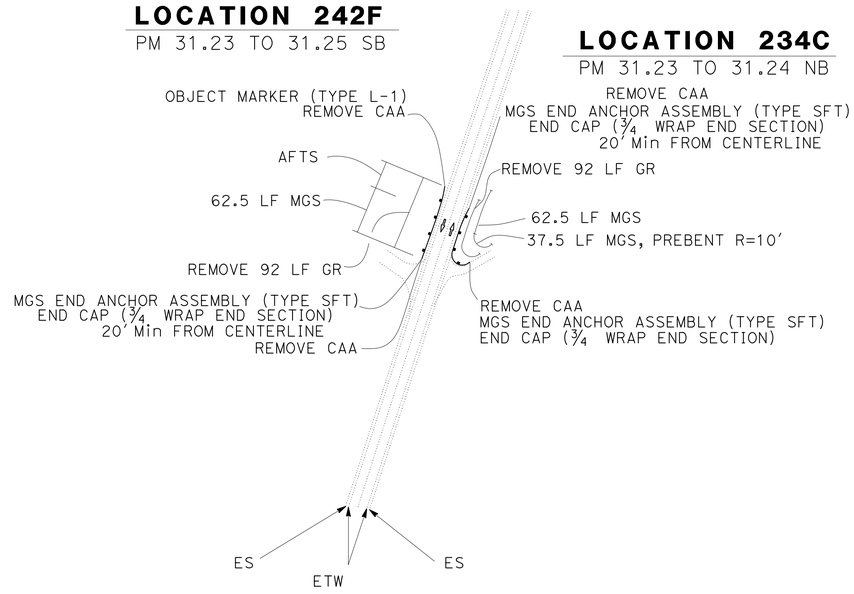

LOCATION 234C
PM 31.23 TO 31.24 NB

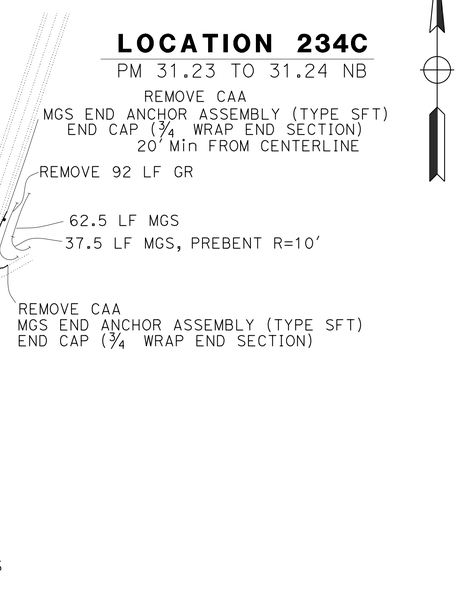

LOCATION 242E
PM 30.67 TO 30.70 SB

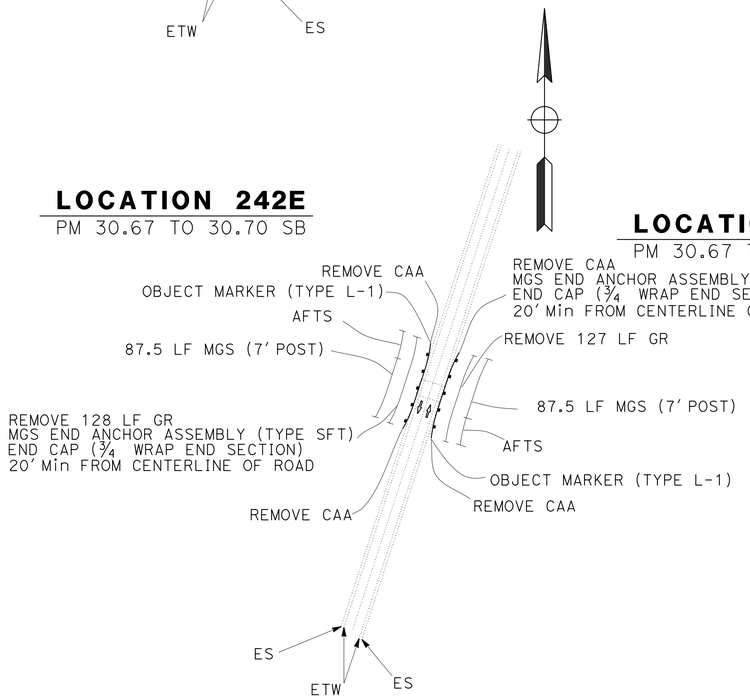

LOCATION 234B
PM 30.67 TO 30.70 NB

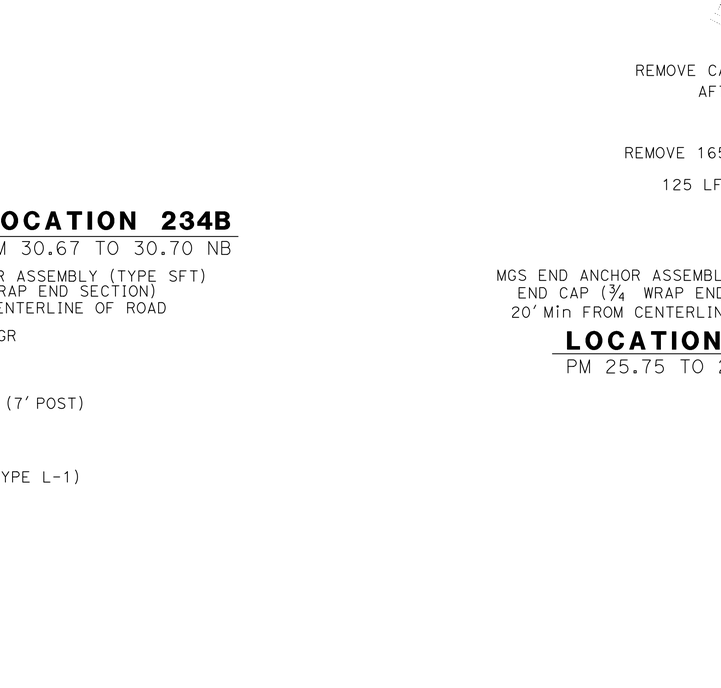

LOCATION 242G
PM 25.75 TO 25.78 EB

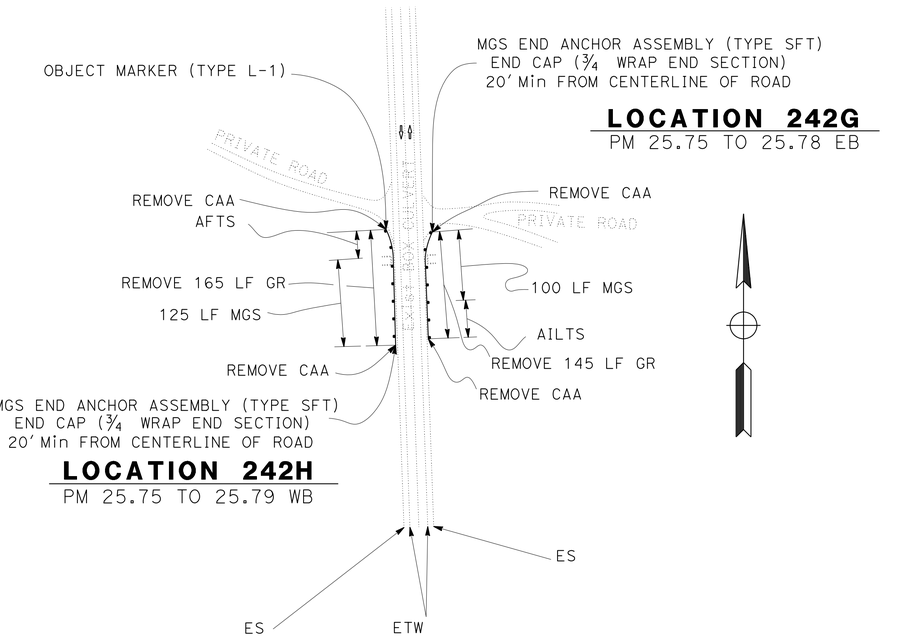

LOCATION 242H
PM 25.75 TO 25.79 WB

CONSTRUCTION DETAILS
ROUTE 45 (Col) AND ROUTE 70 (Yub)
NO SCALE

C-39

CALCULATED-DESIGNED BY	AL G. CHIN	REVISED BY		LAST REVISION	11-12-13
CHECKED BY	ERIC SOUZA	DATE REVISED		DATE PLOTTED =>	29-MAY-2014
FUNCTIONAL SUPERVISOR	STEPHEN WRIGHT			TIME PLOTTED =>	08:43

STATE OF CALIFORNIA - DEPARTMENT OF TRANSPORTATION — TRAFFIC — Caltrans®

BORDER LAST REVISED 7/2/2010 | USERNAME => s130875 | DGN FILE => 0300020450ga039.dgn | RELATIVE BORDER SCALE IS IN INCHES 0 1 2 3 | UNIT 0399 | PROJECT NUMBER & PHASE 03000204501

Dist	COUNTY	ROUTE	POST MILES TOTAL PROJECT	SHEET No.	TOTAL SHEETS
03	But,Col,Gln Sut,Yol,Yub	16,32,45 70,113,162	Var	57	195

Raimund Yambao 2-10-14
REGISTERED CIVIL ENGINEER DATE

2-10-14
PLANS APPROVAL DATE

REGISTERED PROFESSIONAL ENGINEER
RAIMUND J. YAMBAO
No. 80379
Exp. 03-31-15
CIVIL
STATE OF CALIFORNIA

THE STATE OF CALIFORNIA OR ITS OFFICERS OR AGENTS SHALL NOT BE RESPONSIBLE FOR THE ACCURACY OR COMPLETENESS OF SCANNED COPIES OF THIS PLAN SHEET.

NOTE:

1. FOR ACCURATE RIGHT OF WAY DATA, CONTACT RIGHT OF WAY ENGINEERING AT THE DISTRICT OFFICE.

2. EXISTING UTILITY FACILITIES HAVE NOT BEEN PLOTTED ON THESE PLANS.

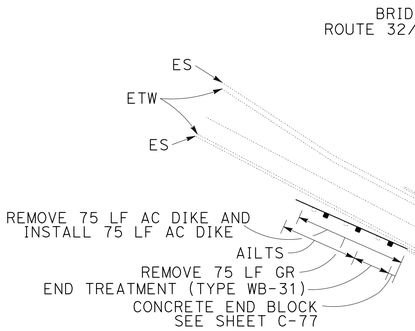

LOCATION 243
PM L0.00 TO L0.01 EB

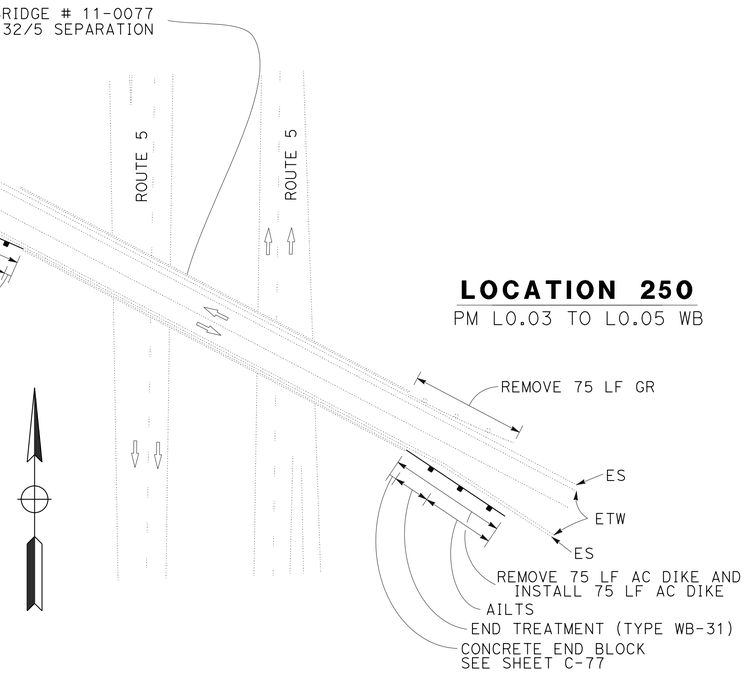

LOCATION 250
PM L0.03 TO L0.05 WB

LOCATION 244
PM L0.03 TO L0.05 EB

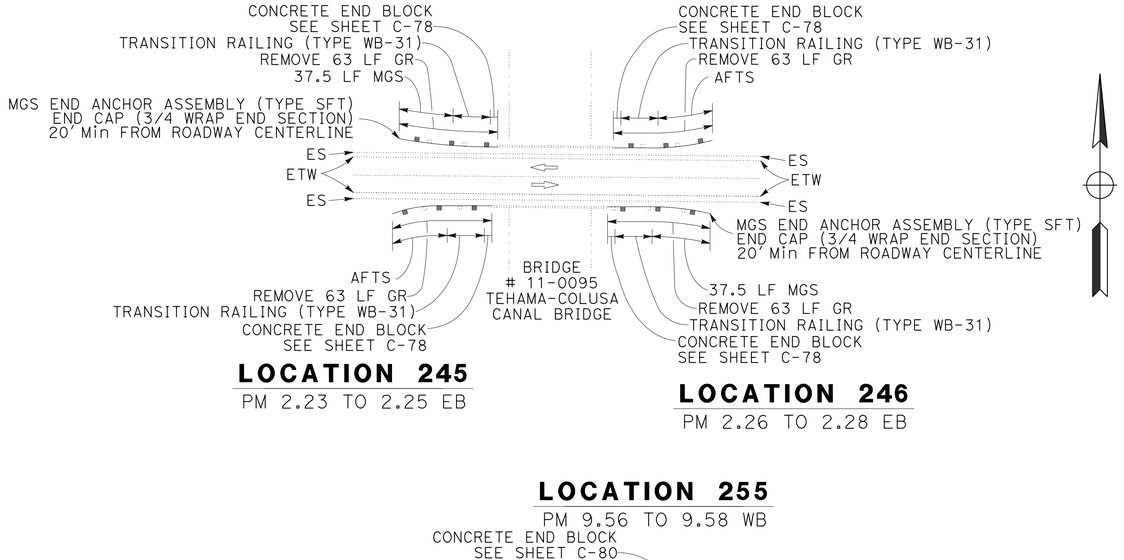

LOCATION 251
PM 2.23 TO 2.25 WB

LOCATION 245
PM 2.23 TO 2.25 EB

LOCATION 252
PM 2.26 TO 2.28 WB

LOCATION 246
PM 2.26 TO 2.28 EB

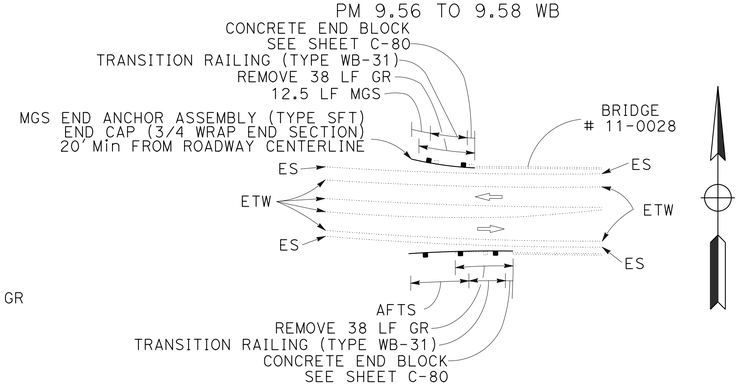

LOCATION 255
PM 9.56 TO 9.58 WB

LOCATION 249
PM 9.56 TO 9.58 EB

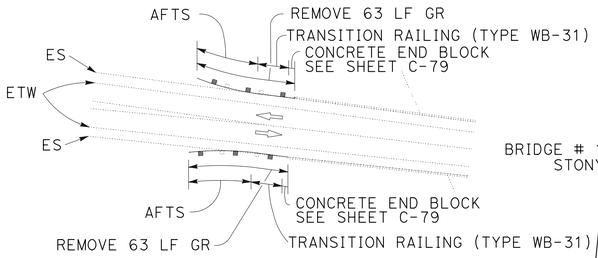

LOCATION 247
PM R5.22 TO R5.24 EB

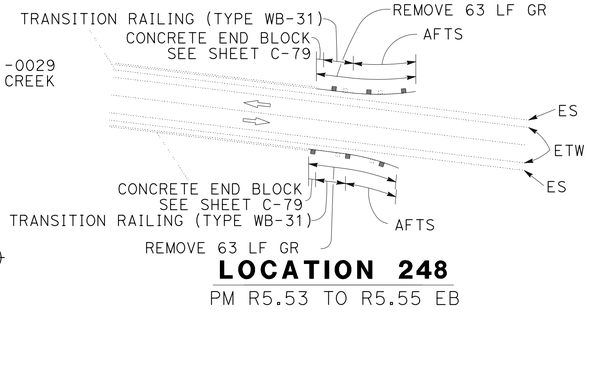

LOCATION 254
PM R5.53 TO R5.55 WB

LOCATION 248
PM R5.53 TO R5.55 EB

CONSTRUCTION DETAILS
ROUTE 32 (Gle)
NO SCALE

C-40

STATE OF CALIFORNIA - DEPARTMENT OF TRANSPORTATION
DESIGN
FUNCTIONAL SUPERVISOR: DEANN SPANGLER
CALCULATED-DESIGNED BY: RAIMUND YAMBAO
CHECKED BY: GARY DEKENS
REVISED BY
DATE REVISED

LAST REVISION 01-21-14
DATE PLOTTED => 29-MAY-2014
TIME PLOTTED => 08:43

BORDER LAST REVISED 7/2/2010
USERNAME => s130875
DGN FILE => 0300020450ga040.dgn
RELATIVE BORDER SCALE IS IN INCHES 0 1 2 3
UNIT 0327
PROJECT NUMBER & PHASE 03000204501

NOTE:

1. FOR ACCURATE RIGHT OF WAY DATA, CONTACT RIGHT OF WAY ENGINEERING AT THE DISTRICT OFFICE.

2. EXISTING UTILITY FACILITIES HAVE NOT BEEN PLOTTED ON THESE PLANS.

Dist	COUNTY	ROUTE	POST MILES TOTAL PROJECT	SHEET No.	TOTAL SHEETS
03	But,Col,Gln Sut,Yol,Yub	16,32,45 70,113,162	Var	58	195

Raimund Yambao 2-10-14
REGISTERED CIVIL ENGINEER DATE

2-10-14
PLANS APPROVAL DATE

REGISTERED PROFESSIONAL ENGINEER
RAIMUND J. YAMBAO
No. 80379
Exp. 03-31-15
CIVIL
STATE OF CALIFORNIA

THE STATE OF CALIFORNIA OR ITS OFFICERS OR AGENTS SHALL NOT BE RESPONSIBLE FOR THE ACCURACY OR COMPLETENESS OF SCANNED COPIES OF THIS PLAN SHEET.

LOCATION 256
PM 0.63 TO 0.78 NB

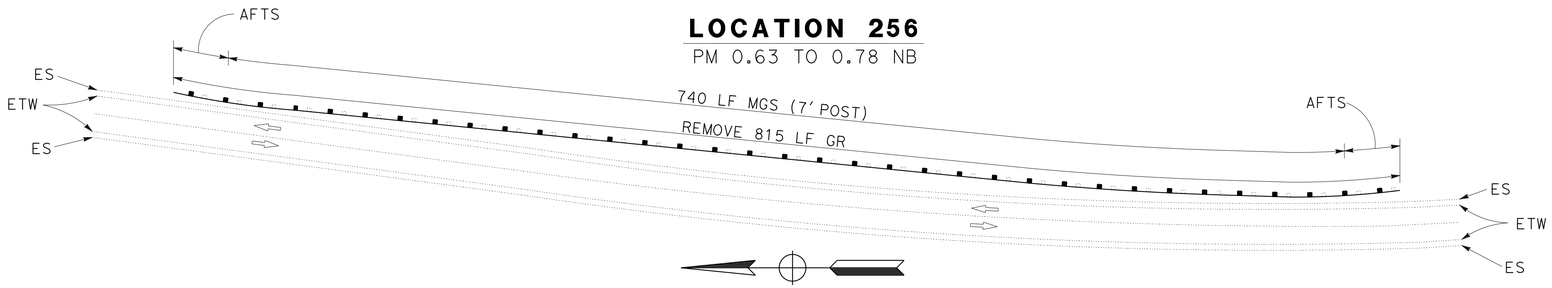

LOCATION 267
PM 2.38 TO 2.47 SB

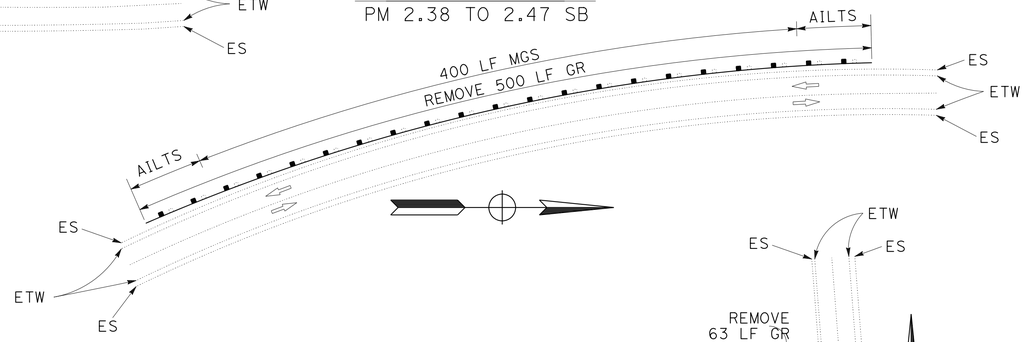

LOCATION 268
PM 4.37 TO 4.39 SB

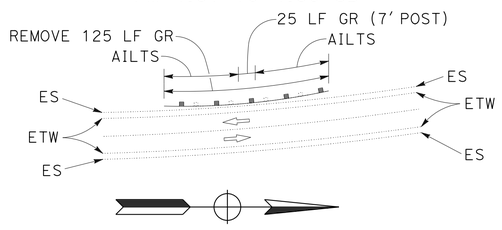

LOCATION 266
PM 0.58 TO 0.60 SB

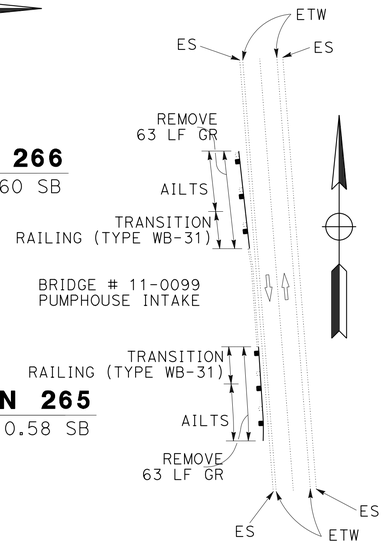

LOCATION 258
PM 8.19 TO 8.21 NB

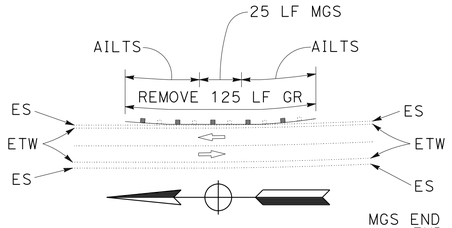

LOCATION 257
PM 0.99 TO 1.03 NB

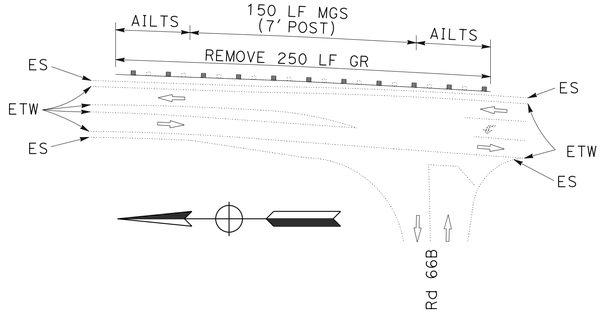

LOCATION 265
PM 0.54 TO 0.58 SB

LOCATION 264
PM 0.00 TO 0.02 SB

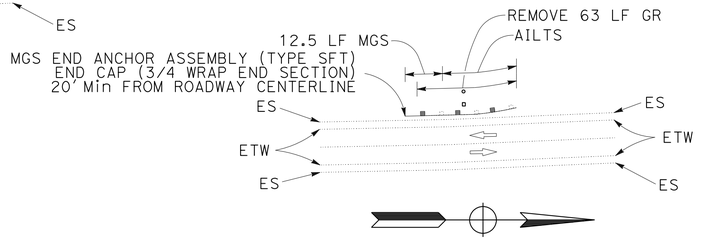

CONSTRUCTION DETAILS
ROUTE 45 (Gle)
NO SCALE

C-41

STATE OF CALIFORNIA - DEPARTMENT OF TRANSPORTATION
Caltrans®
DESIGN
FUNCTIONAL SUPERVISOR: DEANN SPANGLER
CALCULATED-DESIGNED BY: RAIMUND YAMBAO
CHECKED BY: GARY DEKENS
REVISED BY
DATE REVISED

LAST REVISION 01-22-14
DATE PLOTTED => 29-MAY-2014
TIME PLOTTED => 08:43

BORDER LAST REVISED 7/2/2010
USERNAME => s130875
DGN FILE => 0300020450ga041.dgn
RELATIVE BORDER SCALE IS IN INCHES 0 1 2 3
UNIT 0327
PROJECT NUMBER & PHASE 03000204501

NOTE:

1. FOR ACCURATE RIGHT OF WAY DATA, CONTACT RIGHT OF WAY ENGINEERING AT THE DISTRICT OFFICE.

2. EXISTING UTILITY FACILITIES HAVE NOT BEEN PLOTTED ON THESE PLANS.

Dist	COUNTY	ROUTE	POST MILES TOTAL PROJECT	SHEET No.	TOTAL SHEETS
03	But,Col,Gln Sut,Yol,Yub	16,32,45 70,113,162	Var	59	195

Raimund Yambao 2-10-14
REGISTERED CIVIL ENGINEER DATE

2-10-14
PLANS APPROVAL DATE

REGISTERED PROFESSIONAL ENGINEER
RAIMUND J. YAMBAO
No. 80379
Exp. 03-31-15
CIVIL
STATE OF CALIFORNIA

THE STATE OF CALIFORNIA OR ITS OFFICERS OR AGENTS SHALL NOT BE RESPONSIBLE FOR THE ACCURACY OR COMPLETENESS OF SCANNED COPIES OF THIS PLAN SHEET.

LOCATION 261
PM 10.07 TO 10.14 NB

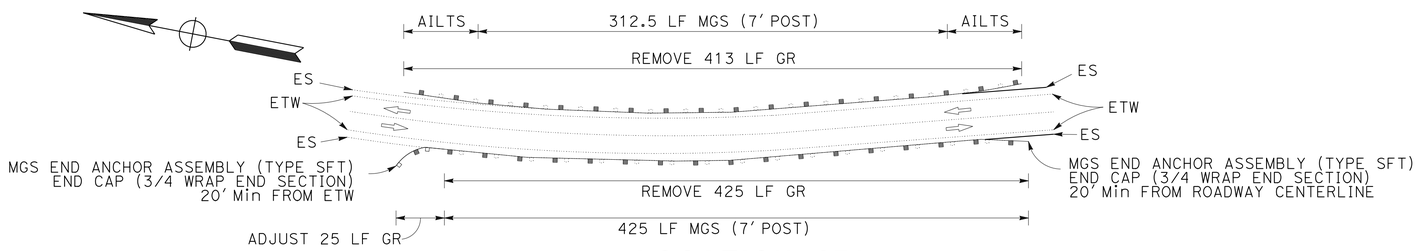

LOCATION 271
PM 10.07 TO 10.13 SB

LOCATION 272
PM R20.63 TO R20.65 SB

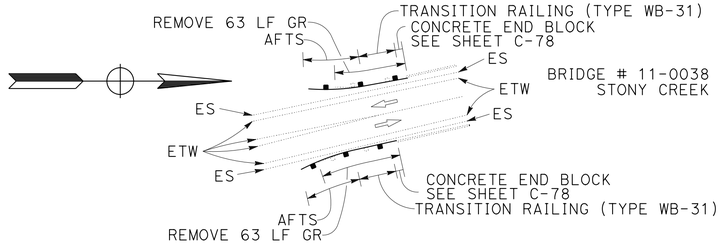

LOCATION 262
PM R20.63 TO R20.65 NB

LOCATION 273
PM R20.75 TO R20.77 SB

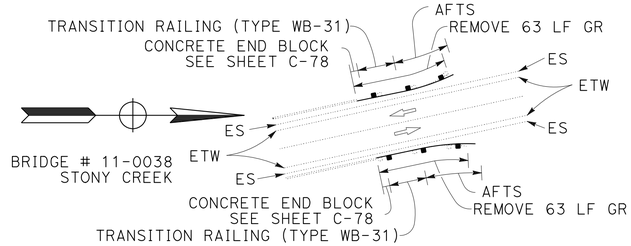

LOCATION 263
PM R20.75 TO R20.77 NB

LOCATION 260
PM 9.83 TO 10.06 NB

LOCATION 259
PM 9.77 TO 9.83 NB

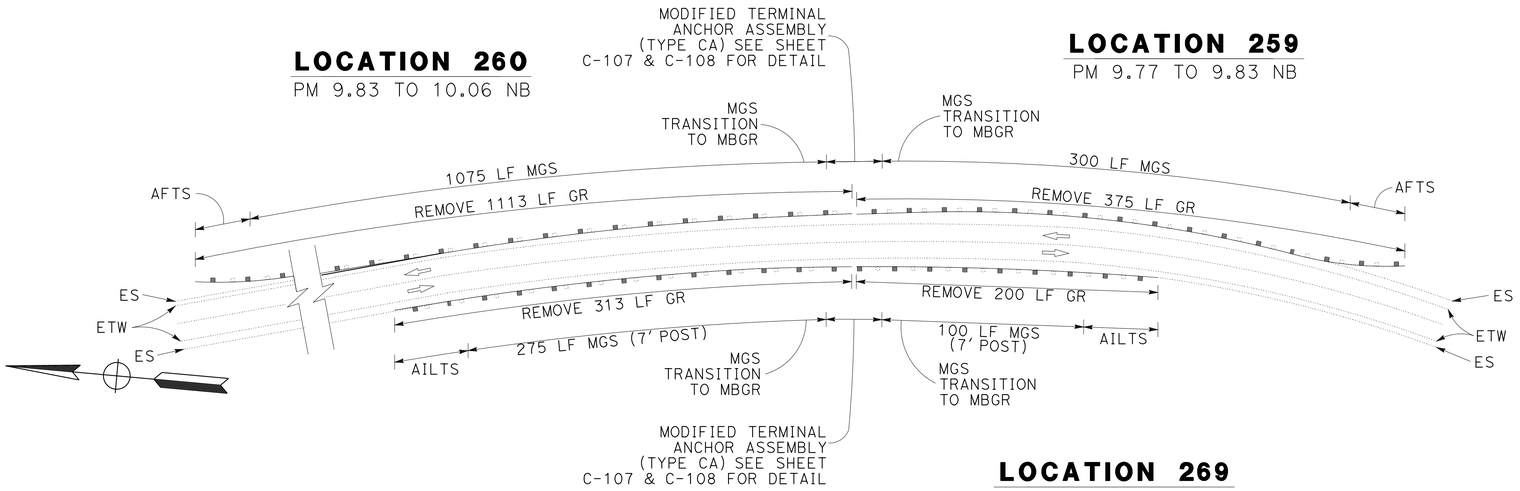

LOCATION 270
PM 9.83 TO 9.88 SB

LOCATION 269
PM 9.79 TO 9.83 SB

CONSTRUCTION DETAILS
ROUTE 45 (Gle)
NO SCALE

C-42

LAST REVISION 01-22-14
DATE PLOTTED => 29-MAY-2014
TIME PLOTTED => 08:43

STATE OF CALIFORNIA - DEPARTMENT OF TRANSPORTATION
DESIGN
FUNCTIONAL SUPERVISOR: DEANN SPANGLER
CALCULATED-DESIGNED BY: GARY DEKENS
CHECKED BY: RAIMUND YAMBAO
REVISED BY
DATE REVISED

BORDER LAST REVISED 7/2/2010
USERNAME => s130875
DGN FILE => 0300020450ga042.dgn
RELATIVE BORDER SCALE IS IN INCHES 0 1 2 3
UNIT 0327
PROJECT NUMBER & PHASE 03000204501

Dist	COUNTY	ROUTE	POST MILES TOTAL PROJECT	SHEET No.	TOTAL SHEETS
03	But,Col,Gln Sut,Yol,Yub	16,32,45 70,113,162	Var	60	195

Raimund Yambao 2-10-14
REGISTERED CIVIL ENGINEER DATE

2-10-14
PLANS APPROVAL DATE

REGISTERED PROFESSIONAL ENGINEER
RAIMUND J. YAMBAO
No. 80379
Exp. 03-31-15
CIVIL
STATE OF CALIFORNIA

THE STATE OF CALIFORNIA OR ITS OFFICERS OR AGENTS SHALL NOT BE RESPONSIBLE FOR THE ACCURACY OR COMPLETENESS OF SCANNED COPIES OF THIS PLAIN SHEET.

NOTE:

1. FOR ACCURATE RIGHT OF WAY DATA, CONTACT RIGHT OF WAY ENGINEERING AT THE DISTRICT OFFICE.

2. EXISTING UTILITY FACILITIES HAVE NOT BEEN PLOTTED ON THESE PLANS.

LOCATION 330
PM 42.93 TO 42.95 WB

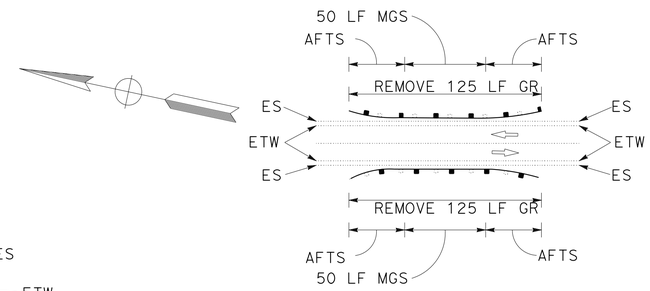

LOCATION 275
PM 42.93 TO 42.95 EB

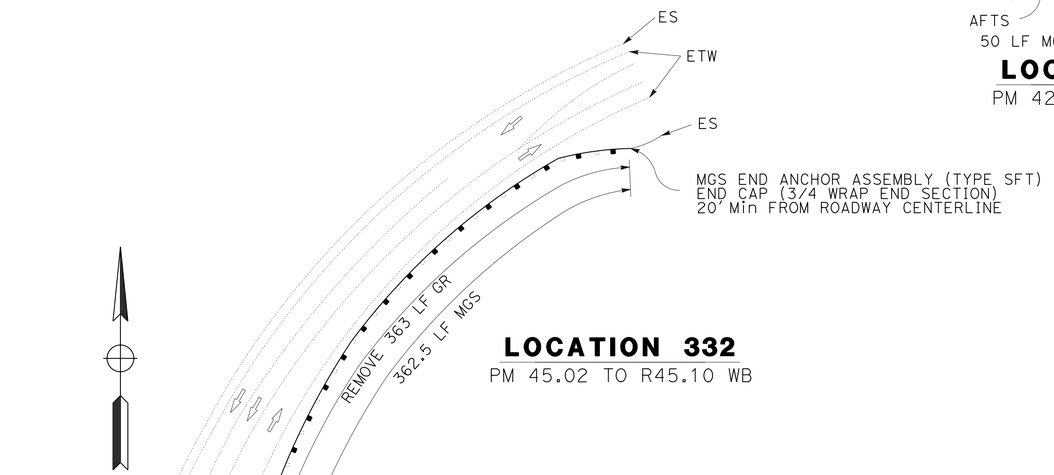

LOCATION 332
PM 45.02 TO R45.10 WB

LOCATION 331
PM 44.30 TO 44.32 WB

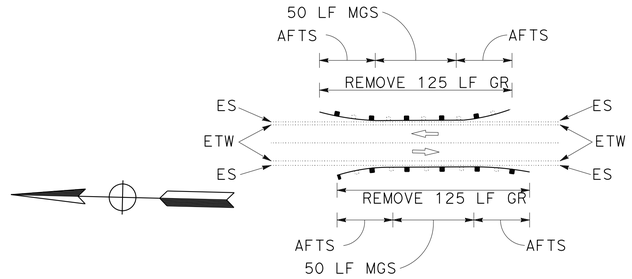

LOCATION 276
PM 44.30 TO 44.32 EB

LOCATION 329
PM 42.16 TO 42.22 WB

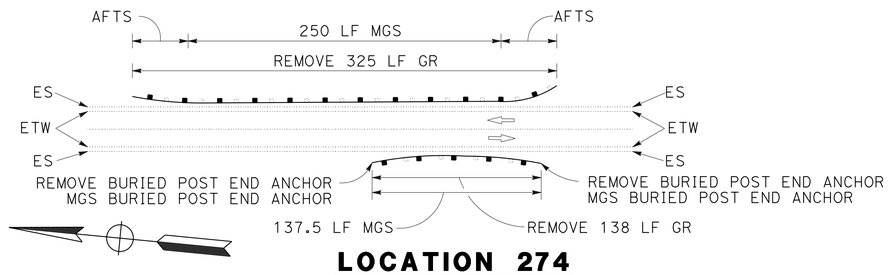

LOCATION 274
PM 42.19 TO 42.21 EB

LOCATION 333
PM R45.19 TO 45.21 WB

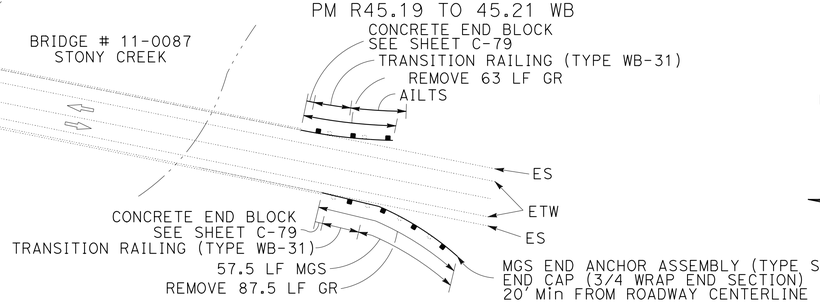

LOCATION 278
PM R45.19 TO 45.21 EB

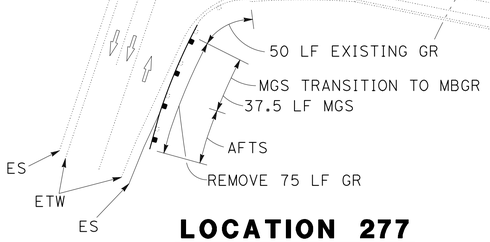

LOCATION 277
PM R45.09 TO R45.10 EB

CONSTRUCTION DETAILS
ROUTE 162 (Gle)
NO SCALE

C-43

REVISED BY	DATE REVISED

CALCULATED-DESIGNED BY
GARY DEKENS
CHECKED BY
RAIMUND YAMBAO
FUNCTIONAL SUPERVISOR
DEANN SPANGLER
STATE OF CALIFORNIA - DEPARTMENT OF TRANSPORTATION
DESIGN

LAST REVISION 01-22-14
DATE PLOTTED => 29-MAY-2014
TIME PLOTTED => 08:43

BORDER LAST REVISED 7/2/2010
USERNAME => s130875
DGN FILE => 0300020450ga043.dgn
RELATIVE BORDER SCALE IS IN INCHES 0 1 2 3
UNIT 0327
PROJECT NUMBER & PHASE 03000204501

NOTE:

1. FOR ACCURATE RIGHT OF WAY DATA, CONTACT RIGHT OF WAY ENGINEERING AT THE DISTRICT OFFICE.

2. EXISTING UTILITY FACILITIES HAVE NOT BEEN PLOTTED ON THESE PLANS.

Dist	COUNTY	ROUTE	POST MILES TOTAL PROJECT	SHEET No.	TOTAL SHEETS
03	But,Col,Gln Sut,Yol,Yub	16,32,45 70,113,162	Var	61	195

Raimund Yambao 2-10-14
REGISTERED CIVIL ENGINEER DATE

2-10-14
PLANS APPROVAL DATE

RAIMUND J. YAMBAO No. 80379 Exp. 03-31-15 CIVIL — REGISTERED PROFESSIONAL ENGINEER — STATE OF CALIFORNIA

THE STATE OF CALIFORNIA OR ITS OFFICERS OR AGENTS SHALL NOT BE RESPONSIBLE FOR THE ACCURACY OR COMPLETENESS OF SCANNED COPIES OF THIS PLAN SHEET.

LOCATION 340
PM 54.17 TO 54.20 WB

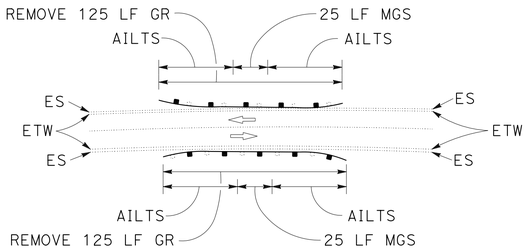

LOCATION 286
PM 54.17 TO 54.20 EB

LOCATION 339
PM 53.68 TO 53.70 WB

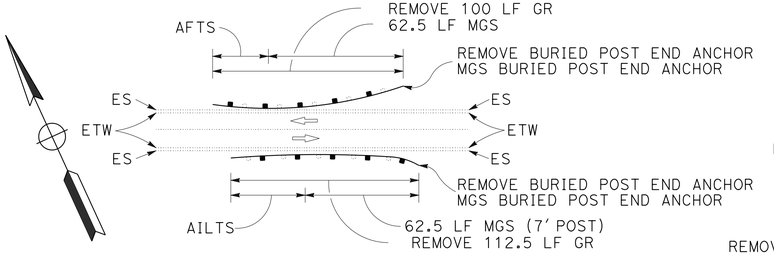

LOCATION 285
PM 53.68 TO 53.70 EB

LOCATION 335
PM 49.26 TO 49.30 WB

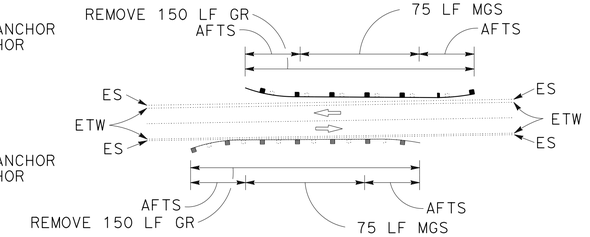

LOCATION 281
PM 49.26 TO 49.30 EB

LOCATION 338
PM 51.68 TO 51.70 WB

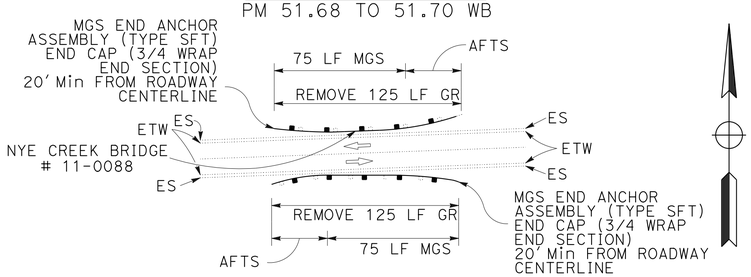

LOCATION 284
PM 51.68 TO 51.70 EB

LOCATION 336
PM 49.93 TO 49.95 WB
SEE SHEET C-106 FOR DETAILS NOT SHOWN

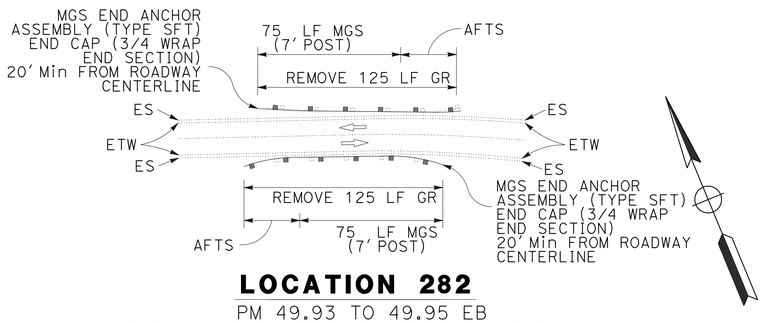

LOCATION 282
PM 49.93 TO 49.95 EB
SEE SHEET C-106 FOR DETAILS NOT SHOWN

LOCATION 337
PM 51.07 TO 51.10 WB

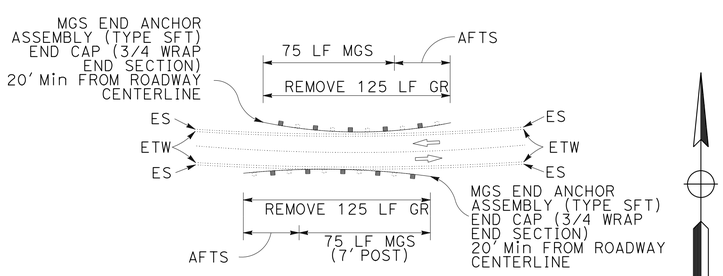

LOCATION 283
PM 51.07 TO 51.10 EB

LOCATION 334
PM 48.95 TO 48.98 WB

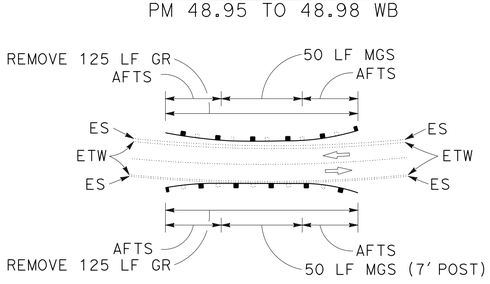

LOCATION 280
PM 48.95 TO 48.98 EB

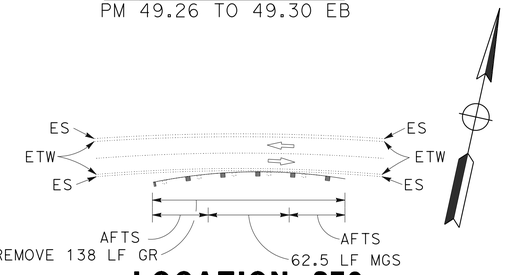

LOCATION 279
PM 48.76 TO 48.79 EB

LOCATION 343
PM 61.94 TO 61.97 WB

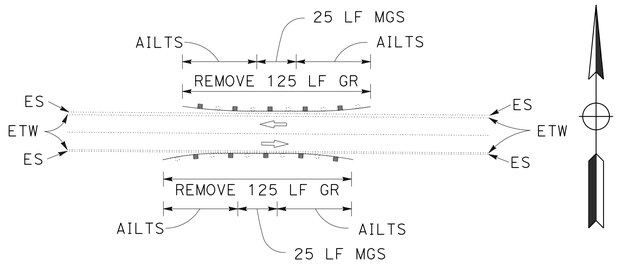

LOCATION 289
PM 61.94 TO 61.97 EB

CONSTRUCTION DETAILS
ROUTE 162 (Gle)
NO SCALE

C-44

STATE OF CALIFORNIA - DEPARTMENT OF TRANSPORTATION
DESIGN
FUNCTIONAL SUPERVISOR: DEANN SPANGLER
CALCULATED-DESIGNED BY: GARY DEKENS
CHECKED BY: RAIMUND YAMBAO
REVISED BY
DATE REVISED

LAST REVISION
DATE PLOTTED => 29-MAY-2014
TIME PLOTTED => 08:43
01-22-14

BORDER LAST REVISED 7/2/2010
USERNAME => s130875
DGN FILE => 0300020450ga044.dgn
RELATIVE BORDER SCALE IS IN INCHES 0 1 2 3
UNIT 0327
PROJECT NUMBER & PHASE 03000204501

NOTE:

1. FOR ACCURATE RIGHT OF WAY DATA, CONTACT RIGHT OF WAY ENGINEERING AT THE DISTRICT OFFICE.

2. EXISTING UTILITY FACILITIES HAVE NOT BEEN PLOTTED ON THESE PLANS.

Dist	COUNTY	ROUTE	POST MILES TOTAL PROJECT	SHEET No.	TOTAL SHEETS
03	But,Col,Gln Sut,Yol,Yub	16,32,45 70,113,162	Var	62	195

Raimund Yambao 2-10-14
REGISTERED CIVIL ENGINEER DATE

2-10-14
PLANS APPROVAL DATE

REGISTERED PROFESSIONAL ENGINEER
RAIMUND J. YAMBAO
No. 80379
Exp. 03-31-15
CIVIL
STATE OF CALIFORNIA

THE STATE OF CALIFORNIA OR ITS OFFICERS OR AGENTS SHALL NOT BE RESPONSIBLE FOR THE ACCURACY OR COMPLETENESS OF SCANNED COPIES OF THIS PLAN SHEET.

LOCATION 348
PM 67.19 TO 67.20 WB

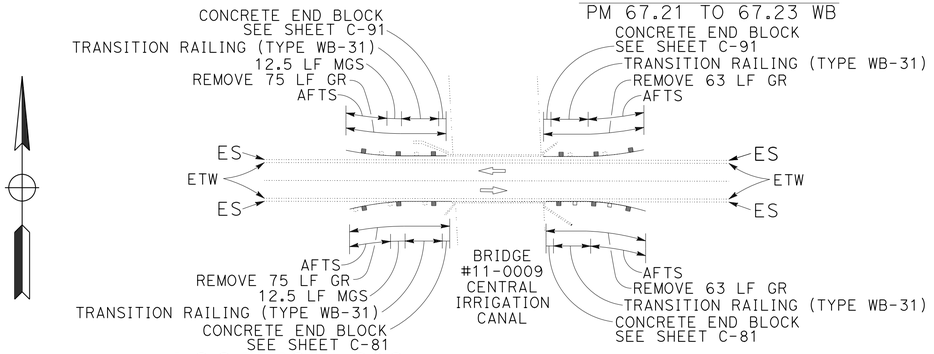

LOCATION 292
PM 67.19 TO 67.20 EB

LOCATION 349
PM 67.21 TO 67.23 WB

LOCATION 293
PM 67.21 TO 67.23 EB

LOCATION 350
PM 68.14 TO 68.16 WB

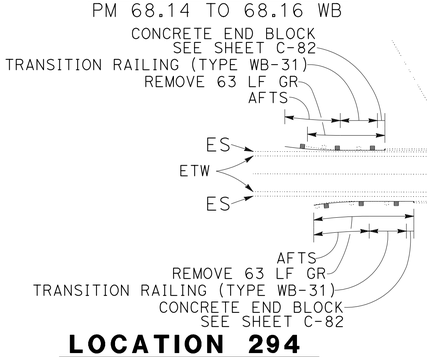

LOCATION 294
PM 68.14 TO 68.16 EB

LOCATION 351
PM 68.18 TO 68.20 WB

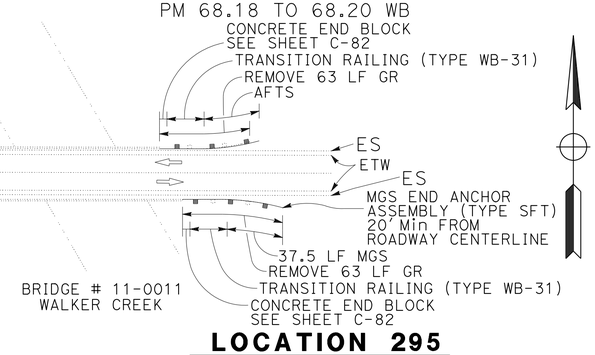

LOCATION 295
PM 68.18 TO 68.20 EB

LOCATION 346
PM 65.48 TO 65.50 WB

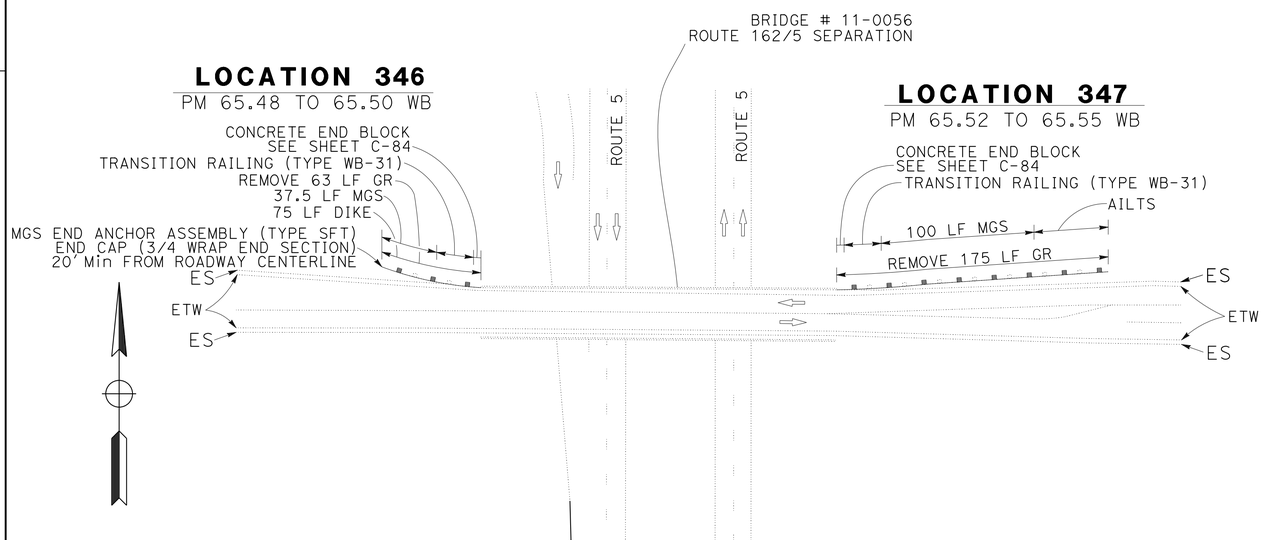

LOCATION 347
PM 65.52 TO 65.55 WB

LOCATION 344
PM 62.36 TO 62.37 WB

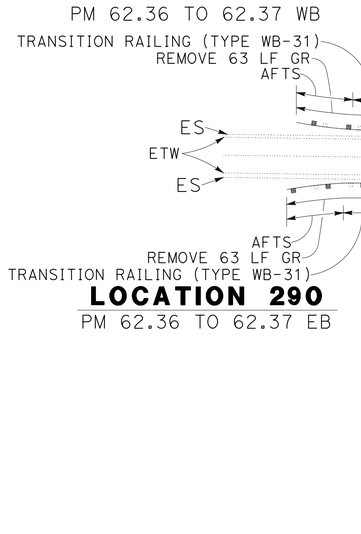

LOCATION 290
PM 62.36 TO 62.37 EB

LOCATION 345
PM 62.39 TO 62.41 WB

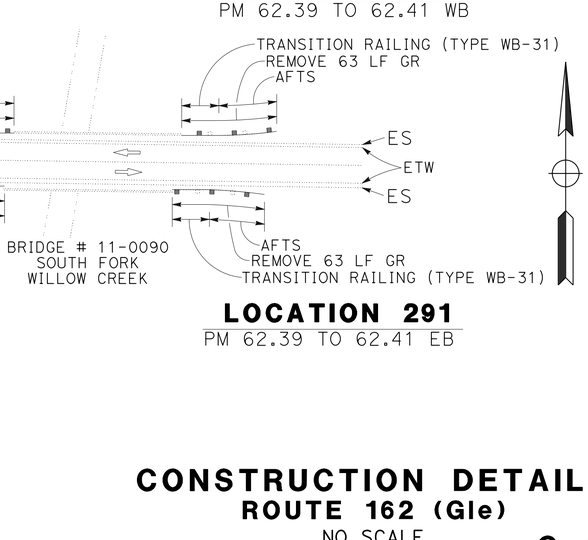

LOCATION 291
PM 62.39 TO 62.41 EB

CONSTRUCTION DETAILS
ROUTE 162 (Gle)
NO SCALE

C-45

STATE OF CALIFORNIA - DEPARTMENT OF TRANSPORTATION
Caltrans®
DESIGN
FUNCTIONAL SUPERVISOR: DEANN SPANGLER
CALCULATED-DESIGNED BY: RAIMUND YAMBAO
CHECKED BY: GARY DEKENS
REVISED BY | DATE REVISED

LAST REVISION: 01-23-14
DATE PLOTTED => 29-MAY-2014
TIME PLOTTED => 08:43

BORDER LAST REVISED 7/2/2010 | USERNAME => s130875 | DGN FILE => 0300020450ga045.dgn | RELATIVE BORDER SCALE IS IN INCHES 0 1 2 3 | UNIT 0327 | PROJECT NUMBER & PHASE 03000204501

Dist	COUNTY	ROUTE	POST MILES TOTAL PROJECT	SHEET No.	TOTAL SHEETS
03	But,Col,Gln Sut,Yol,Yub	16,32,45 70,113,162	Var	63	195

Raimund Yambao 2-10-14
REGISTERED CIVIL ENGINEER DATE

2-10-14
PLANS APPROVAL DATE

RAIMUND J. YAMBAO No. 80379 Exp. 03-31-15 CIVIL — REGISTERED PROFESSIONAL ENGINEER — STATE OF CALIFORNIA

THE STATE OF CALIFORNIA OR ITS OFFICERS OR AGENTS SHALL NOT BE RESPONSIBLE FOR THE ACCURACY OR COMPLETENESS OF SCANNED COPIES OF THIS PLAN SHEET.

NOTE:

1. FOR ACCURATE RIGHT OF WAY DATA, CONTACT RIGHT OF WAY ENGINEERING AT THE DISTRICT OFFICE.

2. EXISTING UTILITY FACILITIES HAVE NOT BEEN PLOTTED ON THESE PLANS.

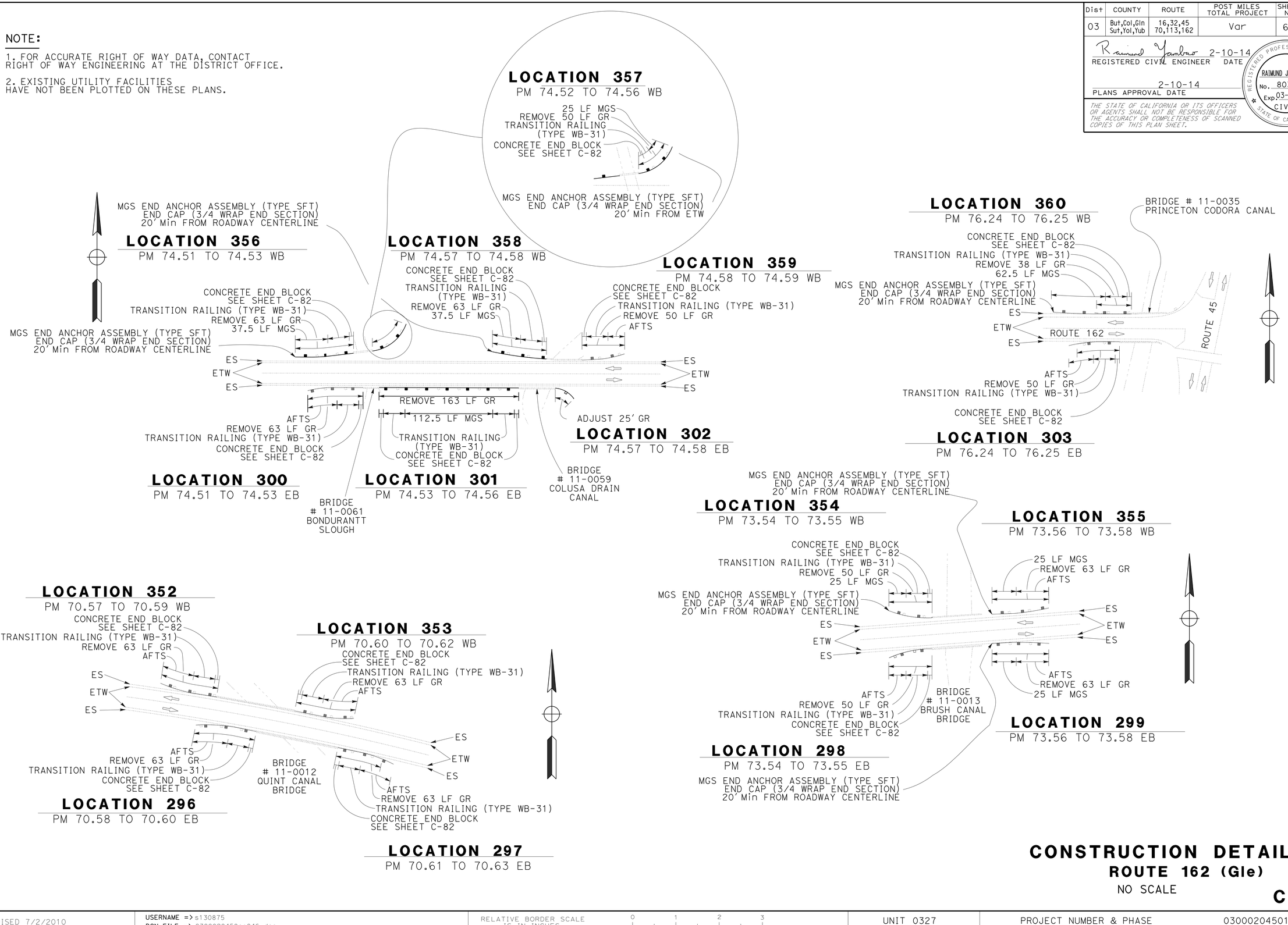

CONSTRUCTION DETAILS

ROUTE 162 (Gle)

NO SCALE

C-46

STATE OF CALIFORNIA - DEPARTMENT OF TRANSPORTATION
DESIGN
FUNCTIONAL SUPERVISOR: DEANN SPANGLER
CALCULATED-DESIGNED BY: GARY DEKENS
CHECKED BY: RAIMUND YAMBAO
REVISED BY
DATE REVISED

LAST REVISION: DATE PLOTTED => 29-MAY-2014 TIME PLOTTED => 08:43
01-22-14

BORDER LAST REVISED 7/2/2010 | USERNAME => s130875 DGN FILE => 0300020450ga046.dgn | RELATIVE BORDER SCALE IS IN INCHES 0 1 2 3 | UNIT 0327 | PROJECT NUMBER & PHASE 03000204501

Dist	COUNTY	ROUTE	POST MILES TOTAL PROJECT	SHEET No.	TOTAL SHEETS
03	But,Col,Gln Sut,Yol,Yub	16,32,45 70,113,162	Var	64	195

Raimund Yambao 2-10-14
REGISTERED CIVIL ENGINEER DATE

2-10-14
PLANS APPROVAL DATE

REGISTERED PROFESSIONAL ENGINEER
RAIMUND J. YAMBAO
No. 80379
Exp. 03-31-15
CIVIL
STATE OF CALIFORNIA

THE STATE OF CALIFORNIA OR ITS OFFICERS OR AGENTS SHALL NOT BE RESPONSIBLE FOR THE ACCURACY OR COMPLETENESS OF SCANNED COPIES OF THIS PLAN SHEET.

NOTE:

1. FOR ACCURATE RIGHT OF WAY DATA, CONTACT RIGHT OF WAY ENGINEERING AT THE DISTRICT OFFICE.

2. EXISTING UTILITY FACILITIES HAVE NOT BEEN PLOTTED ON THESE PLANS.

LOCATION 361
PM 76.70 TO 76.71 WB

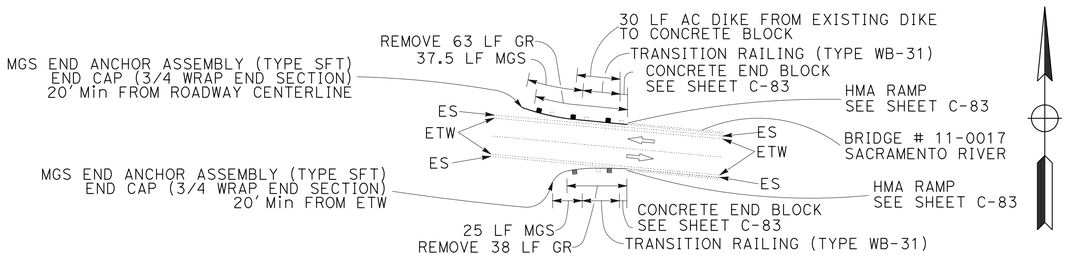

LOCATION 304
PM 76.70 TO 76.71 EB

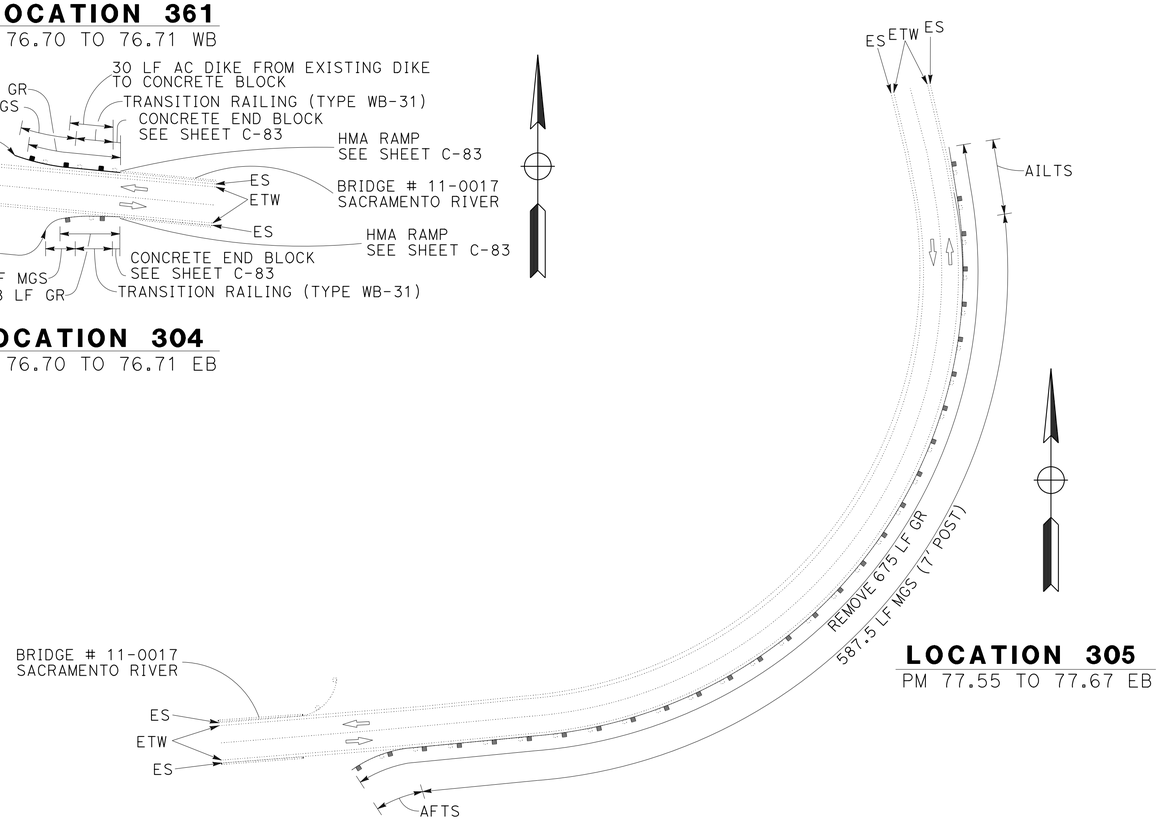

LOCATION 305
PM 77.55 TO 77.67 EB

CONSTRUCTION DETAILS
ROUTE 162 (Gle)
NO SCALE

C-47

STATE OF CALIFORNIA - DEPARTMENT OF TRANSPORTATION	CALCULATED-DESIGNED BY	CHECKED BY	REVISED BY	DATE REVISED
DESIGN	GARY DEKENS	RAIMUND YAMBAO		
FUNCTIONAL SUPERVISOR: DEANN SPANGLER				

LAST REVISION 01-22-14 | DATE PLOTTED => 29-MAY-2014 | TIME PLOTTED => 08:43

BORDER LAST REVISED 7/2/2010 | USERNAME => s130875 | DGN FILE => 0300020450ga047.dgn | RELATIVE BORDER SCALE IS IN INCHES 0 1 2 3 | UNIT 0327 | PROJECT NUMBER & PHASE 03000204501

Dist	COUNTY	ROUTE	POST MILES TOTAL PROJECT	SHEET No.	TOTAL SHEETS
03	But,Col,Gln Sut,Yol,Yub	16,32,45 70,113,162	Var	65	195

Raimund Yambao 2-10-14
REGISTERED CIVIL ENGINEER DATE

2-10-14
PLANS APPROVAL DATE

REGISTERED PROFESSIONAL ENGINEER
RAIMUND J. YAMBAO
No. 80379
Exp. 03-31-15
CIVIL
STATE OF CALIFORNIA

THE STATE OF CALIFORNIA OR ITS OFFICERS OR AGENTS SHALL NOT BE RESPONSIBLE FOR THE ACCURACY OR COMPLETENESS OF SCANNED COPIES OF THIS PLAN SHEET.

NOTE:

1. FOR ACCURATE RIGHT OF WAY DATA, CONTACT RIGHT OF WAY ENGINEERING AT THE DISTRICT OFFICE.

2. EXISTING UTILITY FACILITIES HAVE NOT BEEN PLOTTED ON THESE PLANS.

LOCATION 364
PM 79.54 TO 79.55 WB

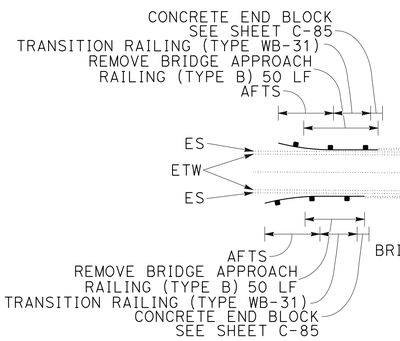

LOCATION 365
PM 79.57 TO 79.58 WB

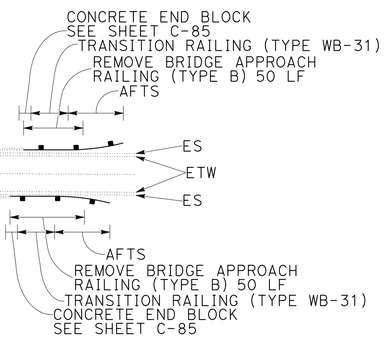

BRIDGE #11-0019
Sac RIVER
OVERFLOW

LOCATION 308
PM 79.54 TO 79.55 EB

LOCATION 309
PM 79.57 TO 79.58 EB

LOCATION 362
PM 79.06 TO 79.07 WB

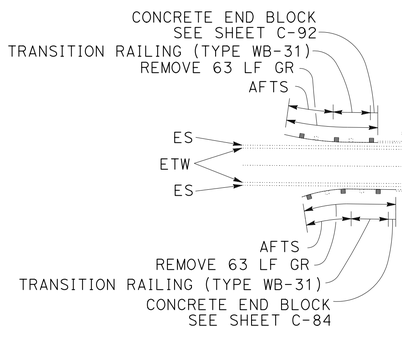

LOCATION 363
PM 79.09 TO 79.10 WB

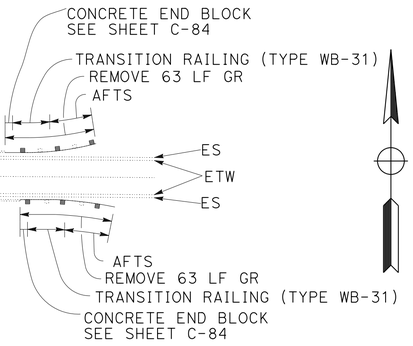

BRIDGE
11-0018
Ssc RIVER
OVERFLOW

LOCATION 306
PM 79.06 TO 79.07 EB

LOCATION 307
PM 79.09 TO 79.10 EB

LOCATION 366
PM 79.95 TO 79.96 WB

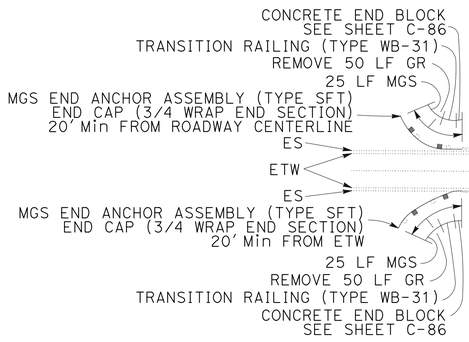

BRIDGE
11-0020
Sac RIVER
OVERFLOW

LOCATION 367
PM 79.97 TO 79.99 WB

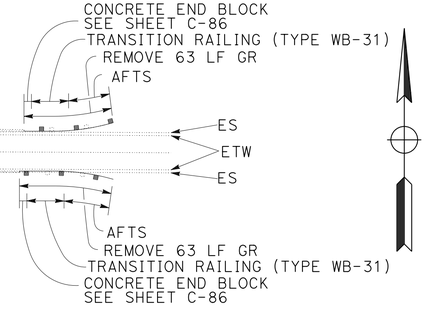

LOCATION 310
PM 79.95 TO 79.96 EB

LOCATION 311
PM 79.97 TO 79.99 EB

LOCATION 368
PM 80.01 TO 80.03 WB

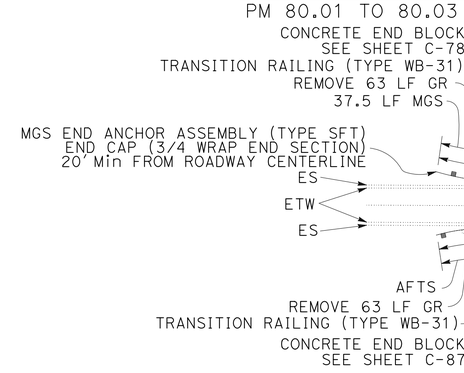

BRIDGE
11-0021
Sac RIVER
OVERFLOW

LOCATION 369
PM 80.04 TO 80.06 WB

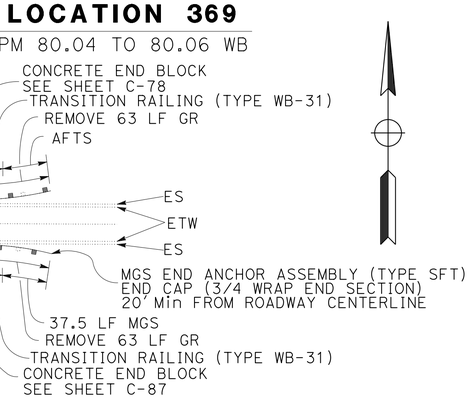

LOCATION 312
PM 80.01 TO 80.03 EB

LOCATION 313
PM 80.04 TO 80.06 EB

CONSTRUCTION DETAILS
ROUTE 162 (Gle)
NO SCALE

C-48

CALCULATED-DESIGNED BY: GARY DEKENS
CHECKED BY: RAIMUND YAMBAO
REVISED BY
DATE REVISED
FUNCTIONAL SUPERVISOR: DEANN SPANGLER
STATE OF CALIFORNIA - DEPARTMENT OF TRANSPORTATION
DESIGN
Caltrans

LAST REVISION 01-22-14
DATE PLOTTED => 29-MAY-2014
TIME PLOTTED => 08:43

BORDER LAST REVISED 7/2/2010
USERNAME => s130875
DGN FILE => 0300020450ga048.dgn
RELATIVE BORDER SCALE IS IN INCHES 0 1 2 3
UNIT 0327
PROJECT NUMBER & PHASE 03000204501

Dist	COUNTY	ROUTE	POST MILES TOTAL PROJECT	SHEET No.	TOTAL SHEETS
03	But,Col,Gln Sut,Yol,Yub	16,32,45 70,113,162	Var	66	195

Raimund Yambao 2-10-14
REGISTERED CIVIL ENGINEER DATE

2-10-14
PLANS APPROVAL DATE

REGISTERED PROFESSIONAL ENGINEER
RAIMUND J. YAMBAO
No. 80379
Exp. 03-31-15
CIVIL
STATE OF CALIFORNIA

THE STATE OF CALIFORNIA OR ITS OFFICERS OR AGENTS SHALL NOT BE RESPONSIBLE FOR THE ACCURACY OR COMPLETENESS OF SCANNED COPIES OF THIS PLAN SHEET.

NOTE:

1. FOR ACCURATE RIGHT OF WAY DATA, CONTACT RIGHT OF WAY ENGINEERING AT THE DISTRICT OFFICE.

2. EXISTING UTILITY FACILITIES HAVE NOT BEEN PLOTTED ON THESE PLANS.

LOCATION 374
PM 81.84 TO 81.86 WB

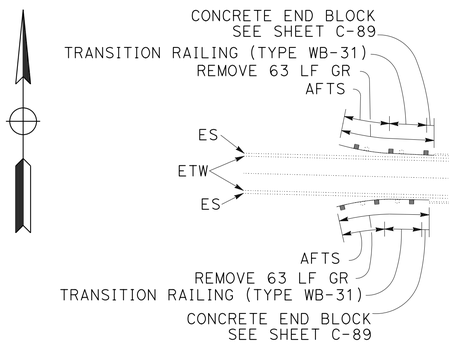

LOCATION 318
PM 81.84 TO 81.86 EB

LOCATION 375
PM 81.88 TO 81.90 WB

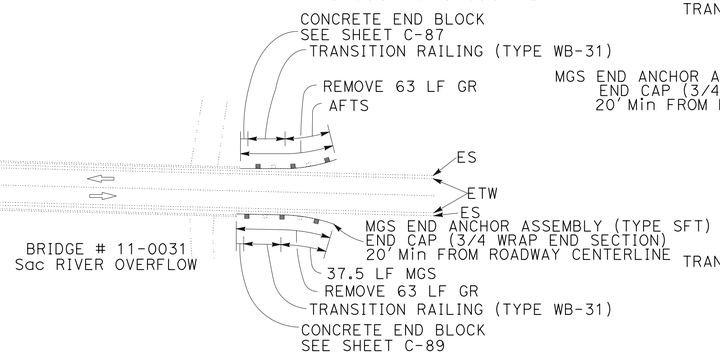

LOCATION 319
PM 81.88 TO 81.90 EB

LOCATION 376
PM 81.99 TO 82.01 WB

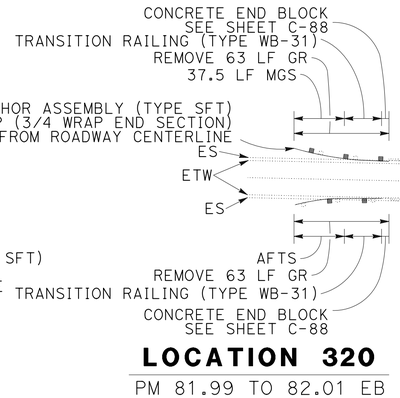

LOCATION 320
PM 81.99 TO 82.01 EB

LOCATION 377
PM 82.05 TO 82.07 WB

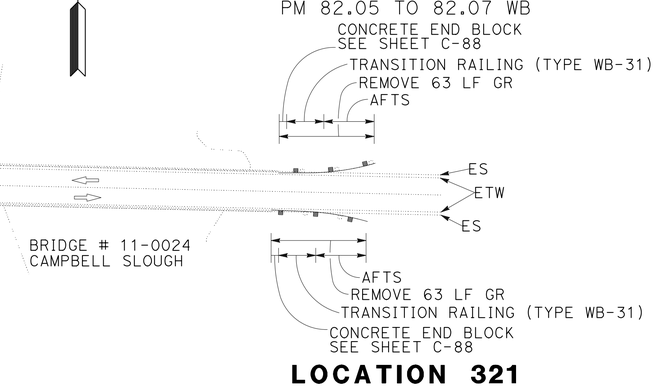

LOCATION 321
PM 82.05 TO 82.07 EB

LOCATION 372
PM 81.61 TO 81.63 WB

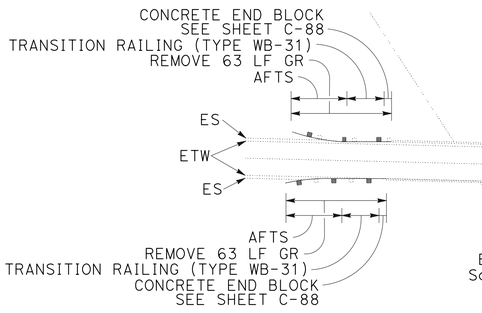

LOCATION 316
PM 81.61 TO 81.63 EB

LOCATION 373
PM 81.71 TO 81.73 WB

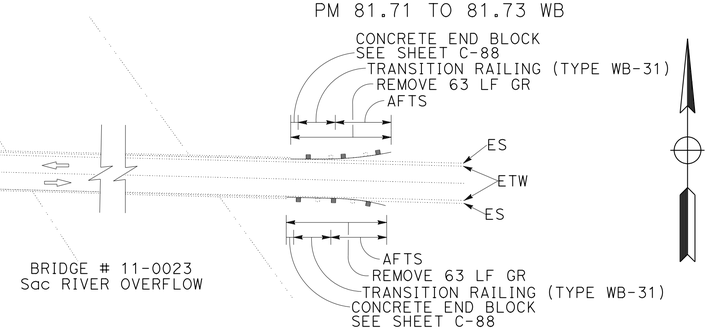

LOCATION 317
PM 81.71 TO 81.73 EB

LOCATION 370
PM 80.71 TO 80.73 WB

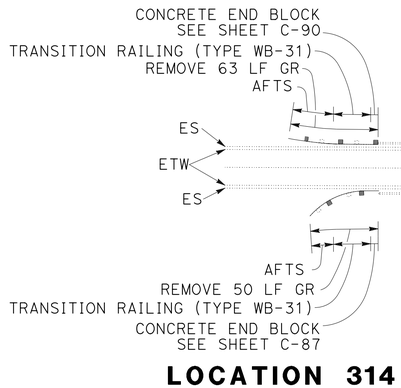

LOCATION 314
PM 80.71 TO 80.73 EB

LOCATION 371
PM 80.75 TO 80.77 WB

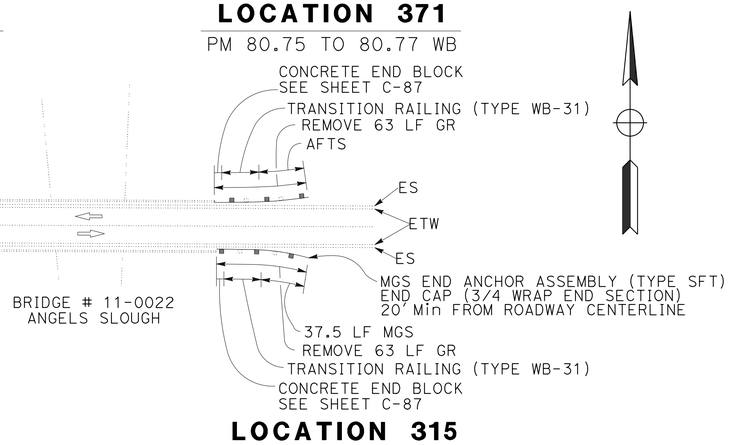

LOCATION 315
PM 80.75 TO 80.77 EB

CONSTRUCTION DETAILS
ROUTE 162 (Gle)
NO SCALE

C-49

STATE OF CALIFORNIA - DEPARTMENT OF TRANSPORTATION
DESIGN
FUNCTIONAL SUPERVISOR: DEANN SPANGLER
CALCULATED-DESIGNED BY: GARY DEKENS
CHECKED BY: RAIMUND YAMBAO
REVISED BY
DATE REVISED

LAST REVISION 01-22-14 | DATE PLOTTED => 29-MAY-2014 | TIME PLOTTED => 08:43

BORDER LAST REVISED 7/2/2010 | USERNAME => s130875 | DGN FILE => 0300020450ga049.dgn | RELATIVE BORDER SCALE IS IN INCHES 0 1 2 3 | UNIT 0327 | PROJECT NUMBER & PHASE 03000204501

NOTE:

1. FOR ACCURATE RIGHT OF WAY DATA, CONTACT RIGHT OF WAY ENGINEERING AT THE DISTRICT OFFICE.

2. EXISTING UTILITY FACILITIES HAVE NOT BEEN PLOTTED ON THESE PLANS.

Dist	COUNTY	ROUTE	POST MILES TOTAL PROJECT	SHEET No.	TOTAL SHEETS
03	But,Col,Gln Sut,Yol,Yub	16,32,45 70,113,162	Var	67	195

Raymund Yambao 2-10-14
REGISTERED CIVIL ENGINEER DATE

2-10-14
PLANS APPROVAL DATE

REGISTERED PROFESSIONAL ENGINEER
RAIMUND J. YAMBAO
No. 80379
Exp. 03-31-15
CIVIL
STATE OF CALIFORNIA

THE STATE OF CALIFORNIA OR ITS OFFICERS OR AGENTS SHALL NOT BE RESPONSIBLE FOR THE ACCURACY OR COMPLETENESS OF SCANNED COPIES OF THIS PLAN SHEET.

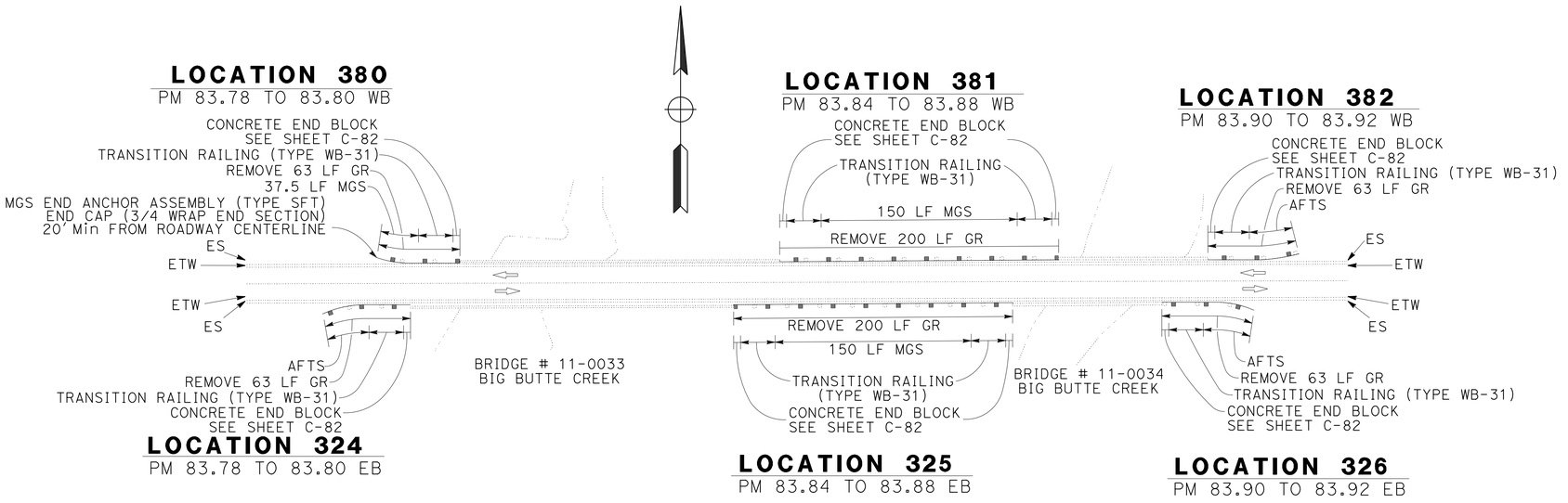

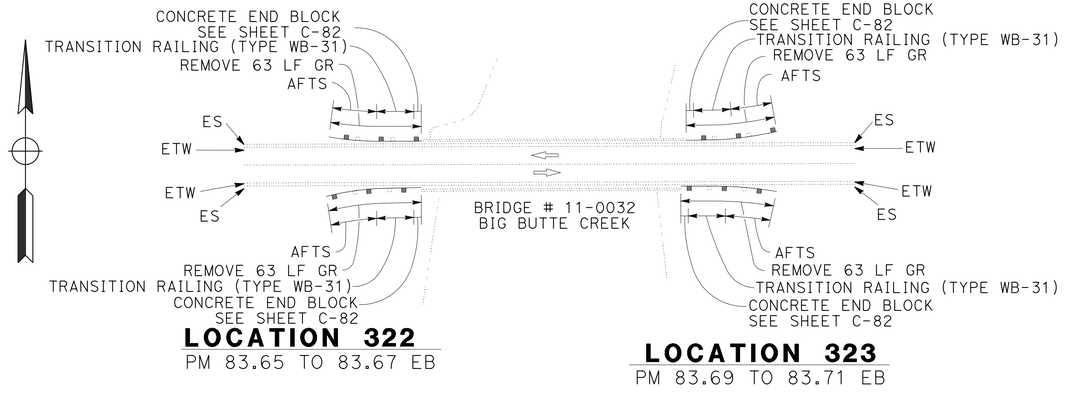

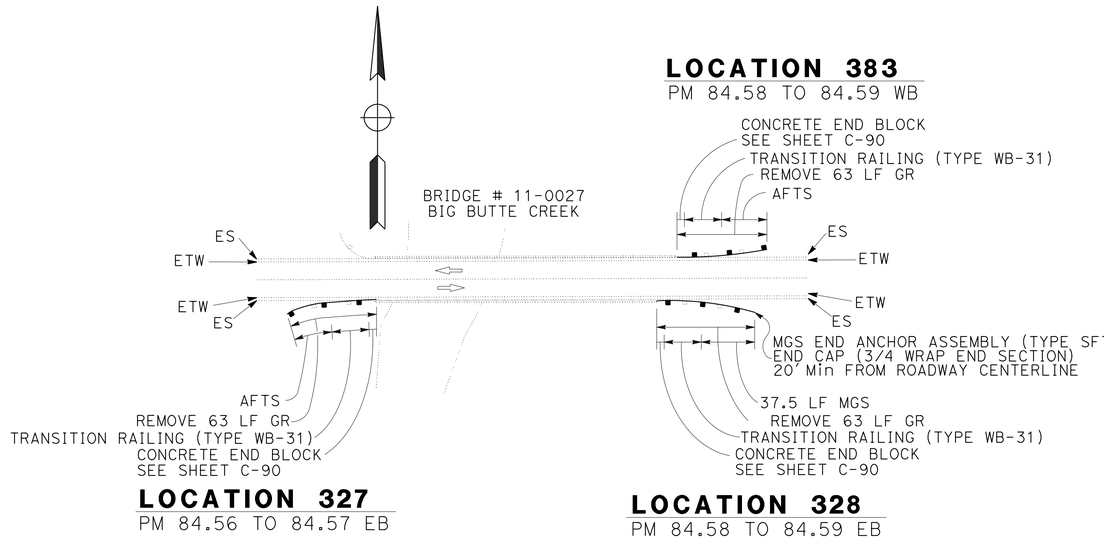

CONSTRUCTION DETAILS
ROUTE 162 (Gle)
NO SCALE

C-50

REVISED BY | DATE REVISED
GARY DEKENS | RAIMUND YAMBAO
CALCULATED-DESIGNED BY | CHECKED BY
FUNCTIONAL SUPERVISOR: DEANN SPANGLER
STATE OF CALIFORNIA - DEPARTMENT OF TRANSPORTATION
DESIGN
Caltrans

LAST REVISION 01-22-14 | DATE PLOTTED => 29-MAY-2014 | TIME PLOTTED => 08:43

BORDER LAST REVISED 7/2/2010 | USERNAME => s130875 | DGN FILE => 0300020450ga050.dgn | RELATIVE BORDER SCALE IS IN INCHES 0 1 2 3 | UNIT 0327 | PROJECT NUMBER & PHASE 03000204501

Dist	COUNTY	ROUTE	POST MILES TOTAL PROJECT	SHEET No.	TOTAL SHEETS
03	But,Col,Gln Sut,Yol,Yub	16,32,45 70,113,162	Var	68	195

Raimund Yambao 2-10-14
REGISTERED CIVIL ENGINEER DATE

2-10-14
PLANS APPROVAL DATE

REGISTERED PROFESSIONAL ENGINEER
RAIMUND J. YAMBAO
No. 80379
Exp. 03-31-15
CIVIL
STATE OF CALIFORNIA

THE STATE OF CALIFORNIA OR ITS OFFICERS OR AGENTS SHALL NOT BE RESPONSIBLE FOR THE ACCURACY OR COMPLETENESS OF SCANNED COPIES OF THIS PLAN SHEET.

NOTE:

1. FOR ACCURATE RIGHT OF WAY DATA, CONTACT RIGHT OF WAY ENGINEERING AT THE DISTRICT OFFICE.

2. EXISTING UTILITY FACILITIES HAVE NOT BEEN PLOTTED ON THESE PLANS.

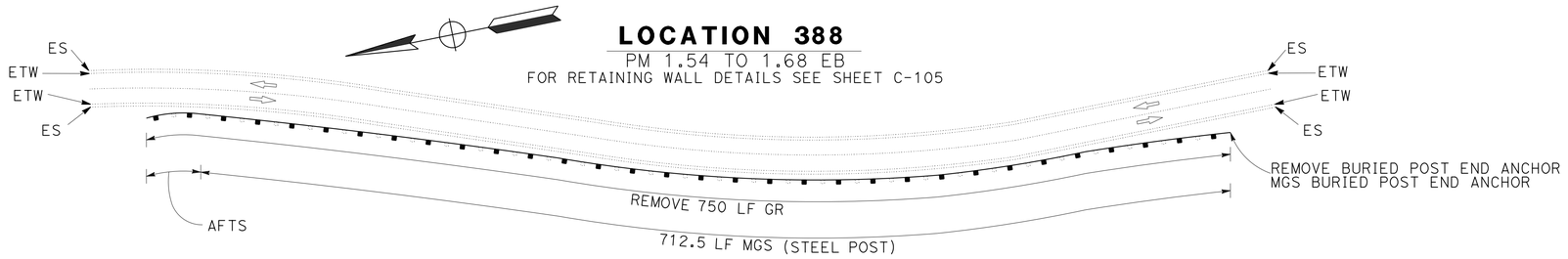

LOCATION 388
PM 1.54 TO 1.68 EB
FOR RETAINING WALL DETAILS SEE SHEET C-105

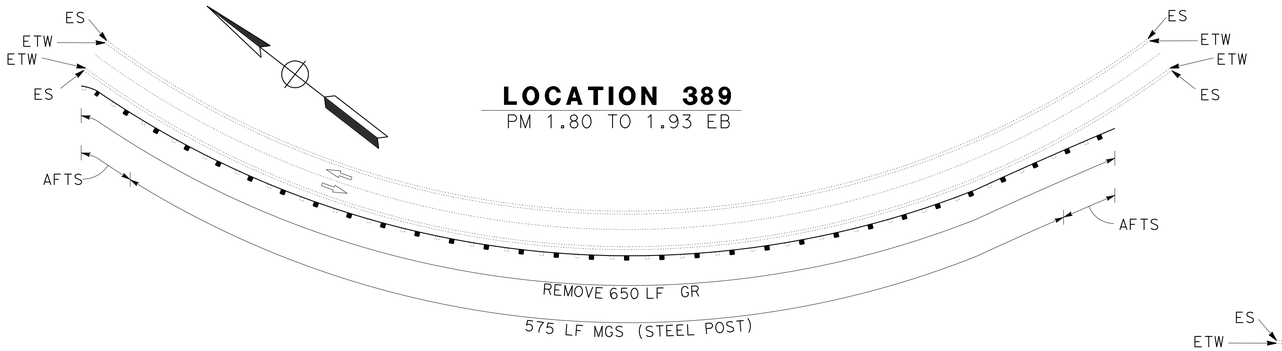

LOCATION 389
PM 1.80 TO 1.93 EB

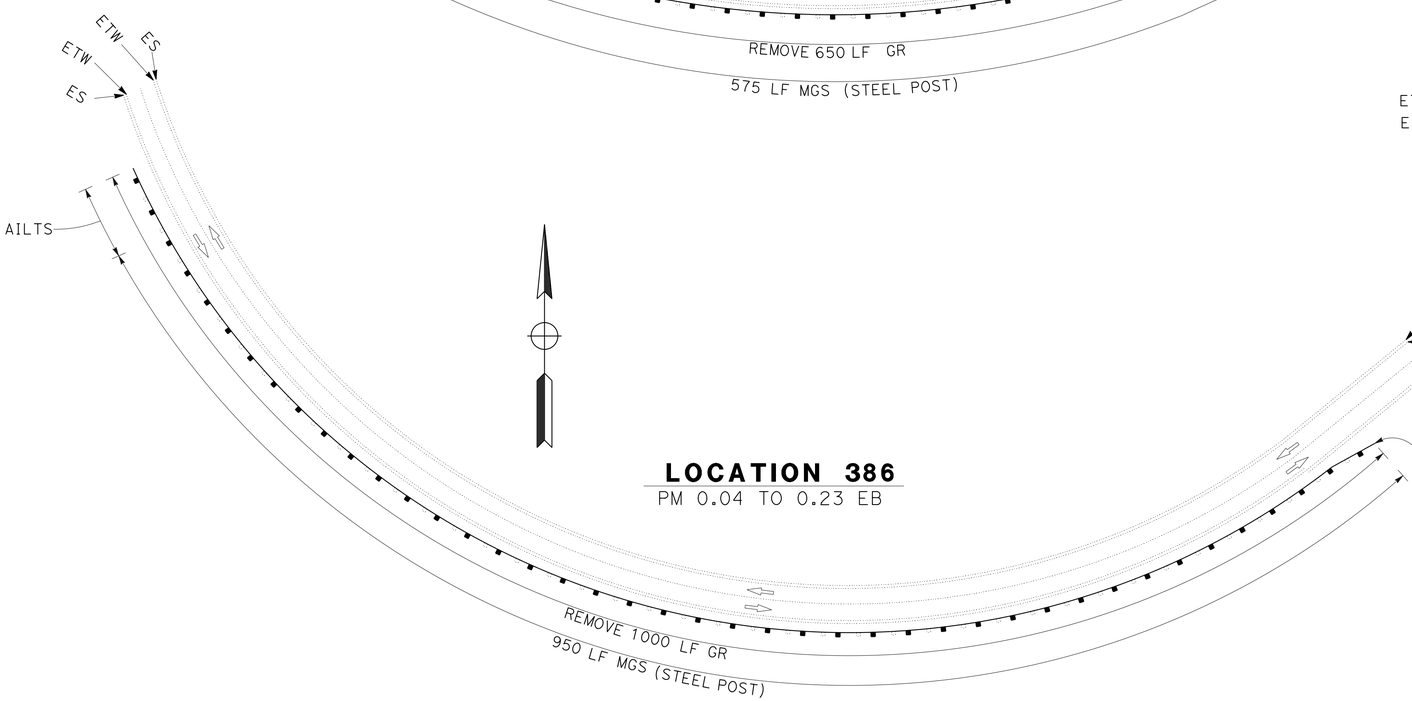

LOCATION 386
PM 0.04 TO 0.23 EB

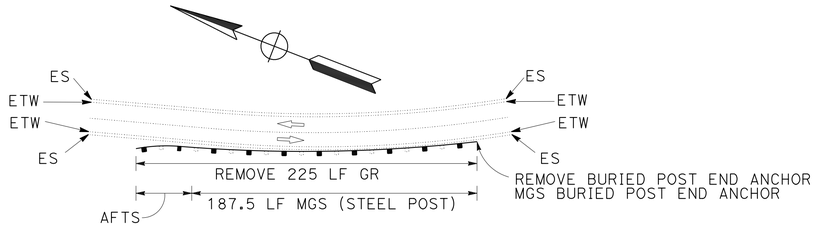

LOCATION 387
PM 1.00 TO 1.06 EB

CONSTRUCTION DETAILS
ROUTE 16 (Yol)

NO SCALE

C-51

REVISED BY	DATE REVISED

CALCULATED-DESIGNED BY
CHECKED BY

GARY DEKENS
RAIMUND YAMBAO

FUNCTIONAL SUPERVISOR
DEANN SPANGLER

STATE OF CALIFORNIA - DEPARTMENT OF TRANSPORTATION
Caltrans®
DESIGN

LAST REVISION 01-22-14
DATE PLOTTED => 29-MAY-2014
TIME PLOTTED => 08:43

BORDER LAST REVISED 7/2/2010
USERNAME => s130875
DGN FILE => 0300020450ga051.dgn
RELATIVE BORDER SCALE IS IN INCHES 0 1 2 3
UNIT 0327
PROJECT NUMBER & PHASE 03000204501

Dist	COUNTY	ROUTE	POST MILES TOTAL PROJECT	SHEET No.	TOTAL SHEETS
03	But,Col,Gln Sut,Yol,Yub	16,32,45 70,113,162	Var	69	195

Raimund Yambao 2-10-14
REGISTERED CIVIL ENGINEER DATE

2-10-14
PLANS APPROVAL DATE

REGISTERED PROFESSIONAL ENGINEER
RAIMUND J. YAMBAO
No. 80379
Exp. 03-31-15
CIVIL
STATE OF CALIFORNIA

THE STATE OF CALIFORNIA OR ITS OFFICERS OR AGENTS SHALL NOT BE RESPONSIBLE FOR THE ACCURACY OR COMPLETENESS OF SCANNED COPIES OF THIS PLAN SHEET.

NOTE:

1. FOR ACCURATE RIGHT OF WAY DATA, CONTACT RIGHT OF WAY ENGINEERING AT THE DISTRICT OFFICE.

2. EXISTING UTILITY FACILITIES HAVE NOT BEEN PLOTTED ON THESE PLANS.

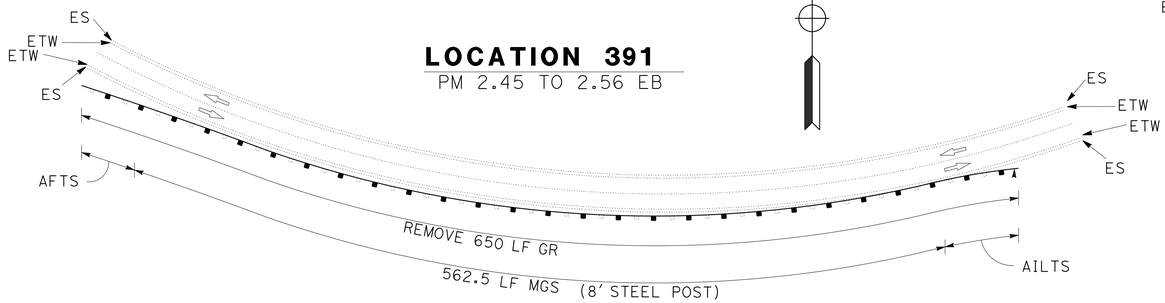

LOCATION 391
PM 2.45 TO 2.56 EB

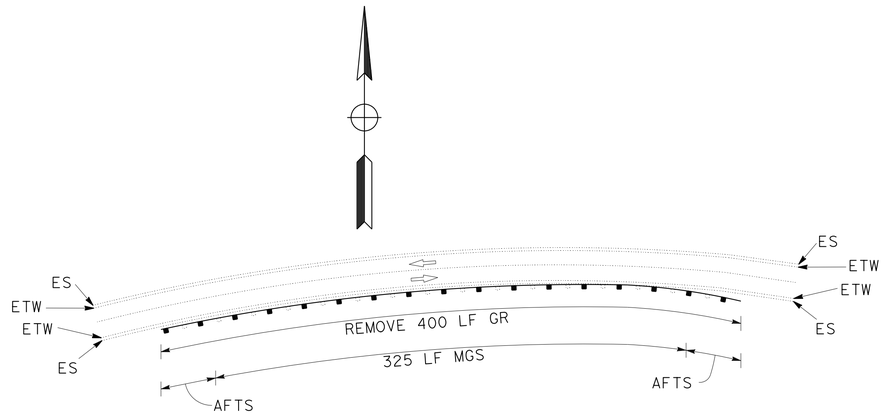

LOCATION 393
PM 3.20 TO 3.28 EB

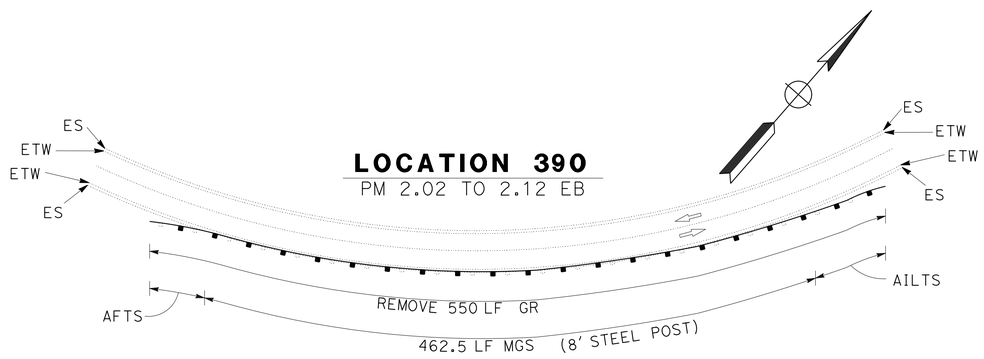

LOCATION 390
PM 2.02 TO 2.12 EB

CONSTRUCTION DETAILS
ROUTE 16 (Yol)
NO SCALE

C-52

STATE OF CALIFORNIA - DEPARTMENT OF TRANSPORTATION
DESIGN
FUNCTIONAL SUPERVISOR: DEANN SPANGLER
CALCULATED-DESIGNED BY: GARY DEKENS
CHECKED BY: RAIMUND YAMBAO
REVISED BY
DATE REVISED

LAST REVISION 01-22-14
DATE PLOTTED => 29-MAY-2014
TIME PLOTTED => 08:43

BORDER LAST REVISED 7/2/2010
USERNAME => s130875
DGN FILE => 0300020450ga052.dgn
RELATIVE BORDER SCALE IS IN INCHES 0 1 2 3
UNIT 0327
PROJECT NUMBER & PHASE 03000204501

Dist	COUNTY	ROUTE	POST MILES TOTAL PROJECT	SHEET No.	TOTAL SHEETS
03	But,Col,Gln Sut,Yol,Yub	16,32,45 70,113,162	Var	70	195

Raimund Yambao 2-10-14
REGISTERED CIVIL ENGINEER DATE

2-10-14
PLANS APPROVAL DATE

REGISTERED PROFESSIONAL ENGINEER
RAIMUND J. YAMBAO
No. 80379
Exp. 03-31-15
CIVIL
STATE OF CALIFORNIA

THE STATE OF CALIFORNIA OR ITS OFFICERS OR AGENTS SHALL NOT BE RESPONSIBLE FOR THE ACCURACY OR COMPLETENESS OF SCANNED COPIES OF THIS PLAN SHEET.

NOTE:

1. FOR ACCURATE RIGHT OF WAY DATA, CONTACT RIGHT OF WAY ENGINEERING AT THE DISTRICT OFFICE.

2. EXISTING UTILITY FACILITIES HAVE NOT BEEN PLOTTED ON THESE PLANS.

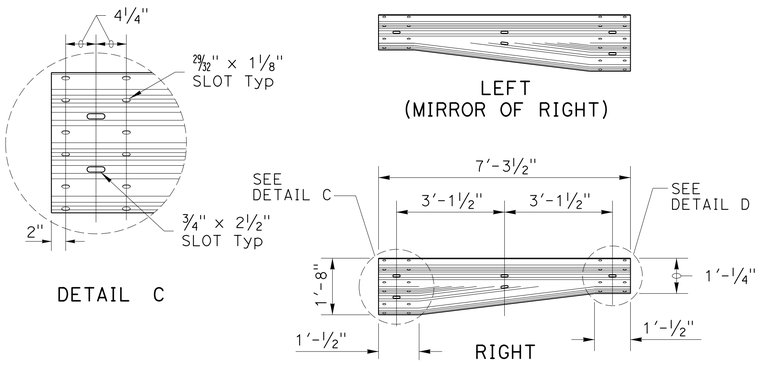

REDUCER ELEMENT TYPE C

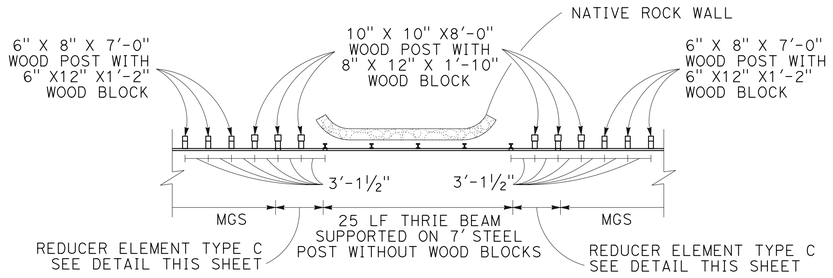

DETAIL A

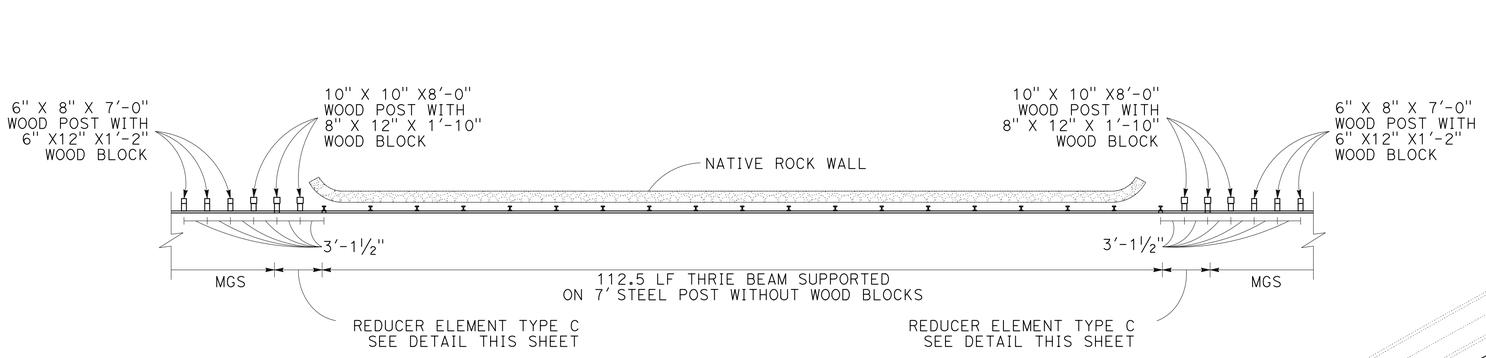

DETAIL B

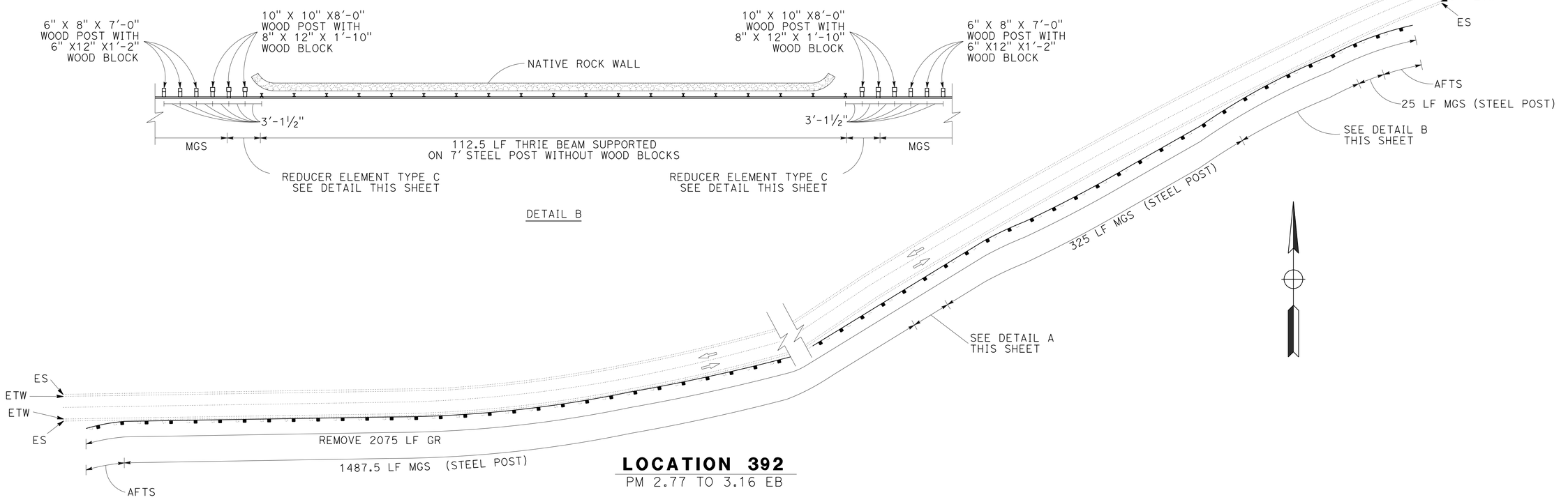

LOCATION 392
PM 2.77 TO 3.16 EB

CONSTRUCTION DETAILS
ROUTE 16 (Yol)
NO SCALE

C-53

LAST REVISION 01-22-14
DATE PLOTTED => 29-MAY-2014
TIME PLOTTED => 08:43

STATE OF CALIFORNIA - DEPARTMENT OF TRANSPORTATION
DESIGN

CALCULATED-DESIGNED BY	CHECKED BY	REVISED BY	DATE REVISED
GARY DEKENS	RAIMUND YAMBAO		

FUNCTIONAL SUPERVISOR: DEANN SPANGLER

BORDER LAST REVISED 7/2/2010

USERNAME => s130875
DGN FILE => 0300020450ga053.dgn

RELATIVE BORDER SCALE IS IN INCHES 0 1 2 3

UNIT 0327

PROJECT NUMBER & PHASE 03000204501

Dist	COUNTY	ROUTE	POST MILES TOTAL PROJECT	SHEET No.	TOTAL SHEETS
03	But,Col,Gln Sut,Yol,Yub	16,32,45 70,113,162	Var	71	195

Raimund Yambao 2-10-14
REGISTERED CIVIL ENGINEER DATE

2-10-14
PLANS APPROVAL DATE

REGISTERED PROFESSIONAL ENGINEER
RAIMUND J. YAMBAO
No. 80379
Exp. 03-31-15
CIVIL
STATE OF CALIFORNIA

THE STATE OF CALIFORNIA OR ITS OFFICERS OR AGENTS SHALL NOT BE RESPONSIBLE FOR THE ACCURACY OR COMPLETENESS OF SCANNED COPIES OF THIS PLAN SHEET.

NOTE:

1. FOR ACCURATE RIGHT OF WAY DATA, CONTACT RIGHT OF WAY ENGINEERING AT THE DISTRICT OFFICE.

2. EXISTING UTILITY FACILITIES HAVE NOT BEEN PLOTTED ON THESE PLANS.

LOCATION 413
PM 4.04 TO 4.20 WB

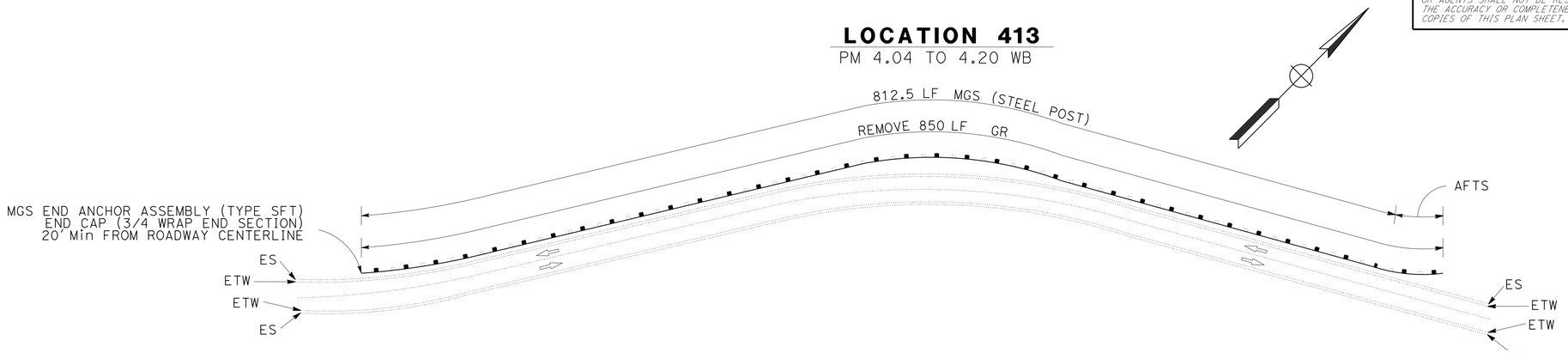

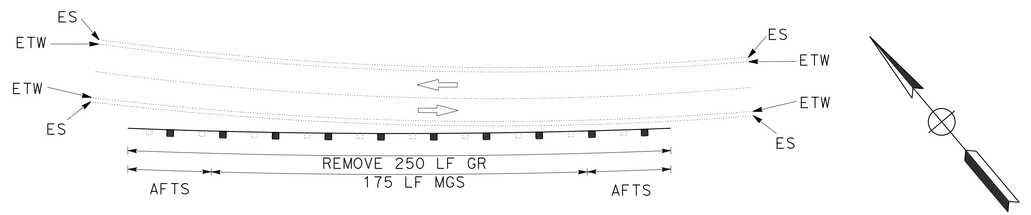

LOCATION 396
PM 5.44 TO 5.49 EB

LOCATION 412
PM 3.94 TO 3.96 WB

LOCATION 411
PM 3.87 TO 3.89 WB

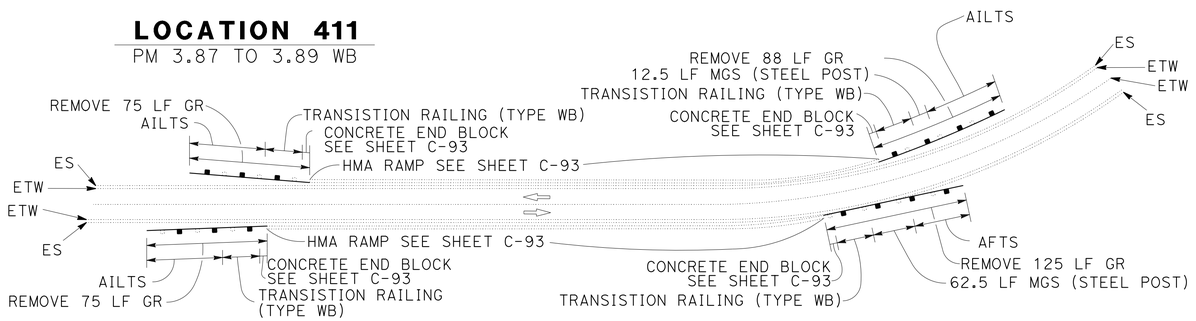

LOCATION 394
PM 3.87 TO 3.89 EB

BRIDGE # 22-0019
CACHE CREEK

LOCATION 395
PM 3.94 TO 3.96 EB

CONSTRUCTION DETAILS
ROUTE 16 (Yol)
NO SCALE

C-54

CALCULATED-DESIGNED BY	CHECKED BY	REVISED BY	DATE REVISED
GARY DEKENS	RAIMUND YAMBAO		

FUNCTIONAL SUPERVISOR: DEANN SPANGLER

STATE OF CALIFORNIA - DEPARTMENT OF TRANSPORTATION
DESIGN
Caltrans

LAST REVISION 01-22-14
DATE PLOTTED => 29-MAY-2014
TIME PLOTTED => 08:43

BORDER LAST REVISED 7/2/2010
USERNAME => s130875
DGN FILE => 0300020450ga054.dgn
RELATIVE BORDER SCALE IS IN INCHES 0 1 2 3
UNIT 0327
PROJECT NUMBER & PHASE 03000204501

Dist	COUNTY	ROUTE	POST MILES TOTAL PROJECT	SHEET No.	TOTAL SHEETS
03	But,Col,Gln Sut,Yol,Yub	16,32,45 70,113,162	Var	72	195

Raimund Yambao 2-10-14
REGISTERED CIVIL ENGINEER DATE

2-10-14
PLANS APPROVAL DATE

REGISTERED PROFESSIONAL ENGINEER
RAIMUND J. YAMBAO
No. 80379
Exp. 03-31-15
CIVIL
STATE OF CALIFORNIA

THE STATE OF CALIFORNIA OR ITS OFFICERS OR AGENTS SHALL NOT BE RESPONSIBLE FOR THE ACCURACY OR COMPLETENESS OF SCANNED COPIES OF THIS PLAN SHEET.

NOTE:

1. FOR ACCURATE RIGHT OF WAY DATA, CONTACT RIGHT OF WAY ENGINEERING AT THE DISTRICT OFFICE.

2. EXISTING UTILITY FACILITIES HAVE NOT BEEN PLOTTED ON THESE PLANS.

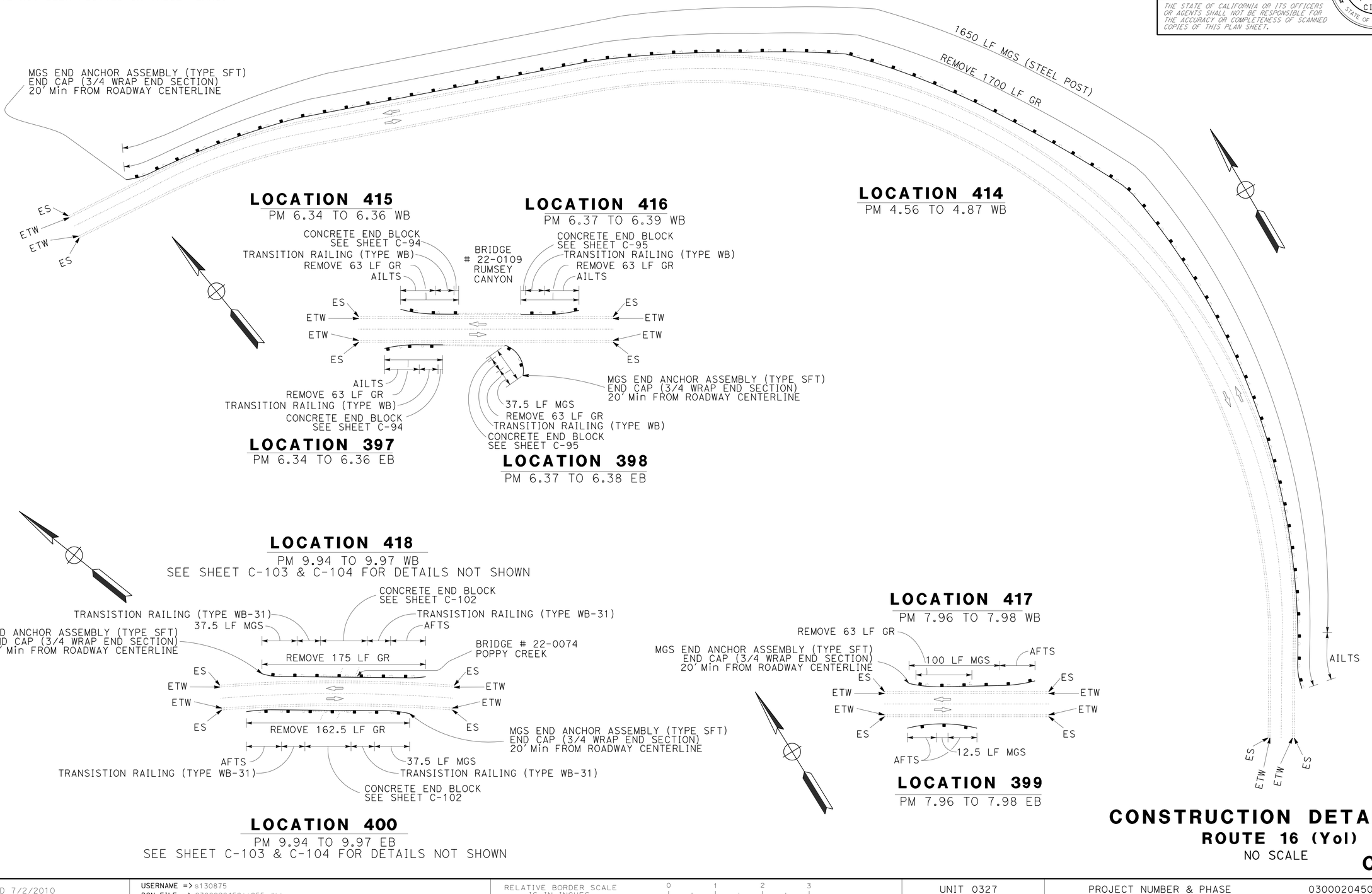

CONSTRUCTION DETAILS

ROUTE 16 (Yol)

NO SCALE

C-55

CALCULATED-DESIGNED BY	GARY DEKENS
CHECKED BY	RAIMUND YAMBAO
FUNCTIONAL SUPERVISOR	DEANN SPANGLER
STATE OF CALIFORNIA - DEPARTMENT OF TRANSPORTATION	DESIGN
REVISED BY	
DATE REVISED	
LAST REVISION	01-22-14
DATE PLOTTED =>	29-MAY-2014
TIME PLOTTED =>	08:43

BORDER LAST REVISED 7/2/2010 | USERNAME => s130875 | DGN FILE => 0300020450ga055.dgn | RELATIVE BORDER SCALE IS IN INCHES 0 1 2 3 | UNIT 0327 | PROJECT NUMBER & PHASE 03000204501

Dist	COUNTY	ROUTE	POST MILES TOTAL PROJECT	SHEET No.	TOTAL SHEETS
03	But,Col,Gln Sut,Yol,Yub	16,32,45 70,113,162	Var	73	195

Raimund Yambao 2-10-14
REGISTERED CIVIL ENGINEER DATE

2-10-14
PLANS APPROVAL DATE

REGISTERED PROFESSIONAL ENGINEER
RAIMUND J. YAMBAO
No. 80379
Exp. 03-31-15
CIVIL
STATE OF CALIFORNIA

THE STATE OF CALIFORNIA OR ITS OFFICERS OR AGENTS SHALL NOT BE RESPONSIBLE FOR THE ACCURACY OR COMPLETENESS OF SCANNED COPIES OF THIS PLAN SHEET.

NOTE:

1. FOR ACCURATE RIGHT OF WAY DATA, CONTACT RIGHT OF WAY ENGINEERING AT THE DISTRICT OFFICE.

2. EXISTING UTILITY FACILITIES HAVE NOT BEEN PLOTTED ON THESE PLANS.

LOCATION 421
PM 13.59 TO 13.62 WB
SEE SHEET C-103 & C-104 FOR DETAILS NOT SHOWN

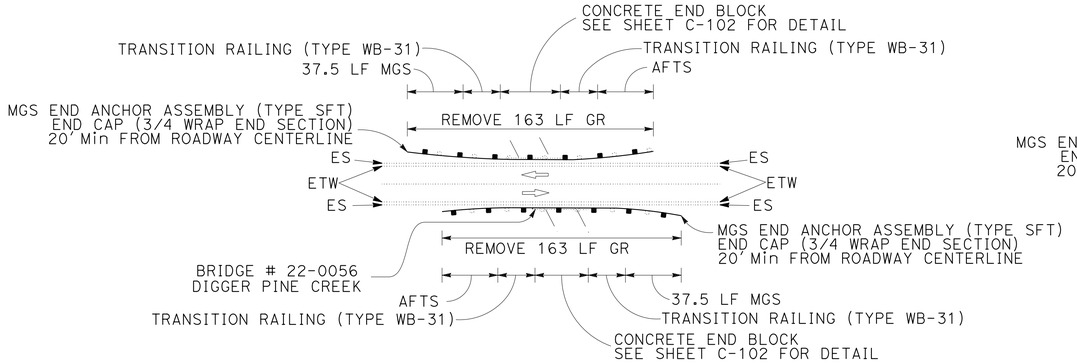

LOCATION 403
PM 13.59 TO 13.62 EB
SEE SHEET C-103 & C-104 FOR DETAILS NOT SHOWN

LOCATION 424
PM 16.25 TO 16.27 WB

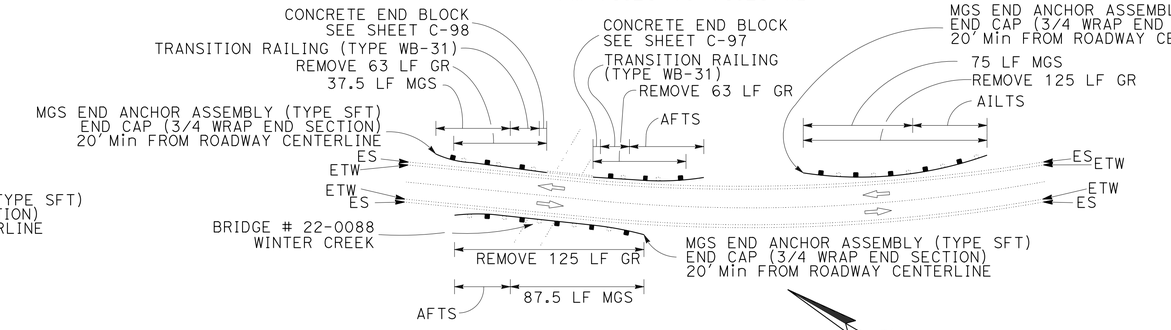

LOCATION 425
PM 16.28 TO 16.29 WB

LOCATION 426
PM 16.30 TO 16.33 WB

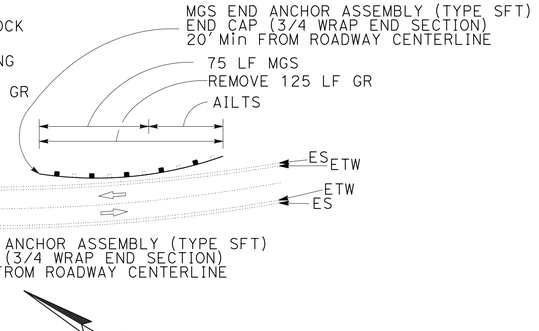

LOCATION 406
PM 16.25 TO 16.27 EB

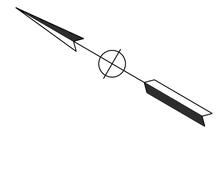

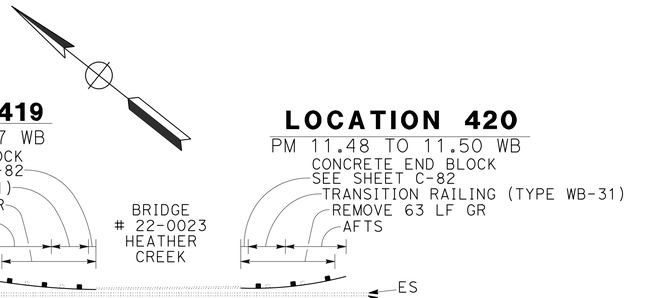

LOCATION 419
PM 11.45 TO 11.47 WB

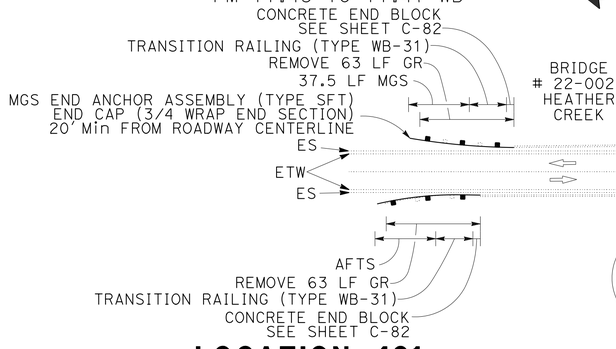

LOCATION 401
PM 11.45 TO 11.47 EB

LOCATION 420
PM 11.48 TO 11.50 WB

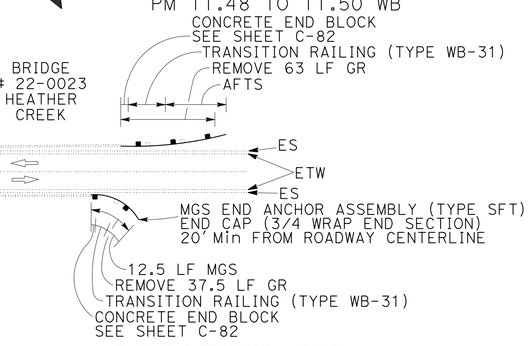

LOCATION 402
PM 11.48 TO 11.49 EB

LOCATION 422
PM 14.99 TO 15.01 WB

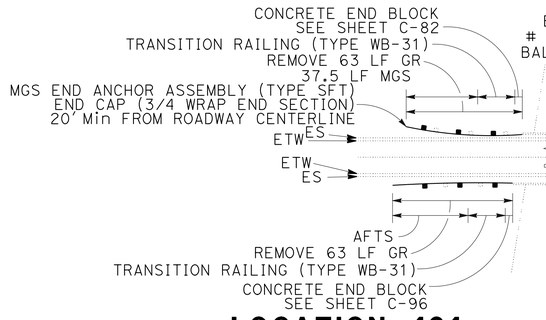

LOCATION 404
PM 14.99 TO 15.01 EB

LOCATION 423
PM 15.02 TO 15.04 WB

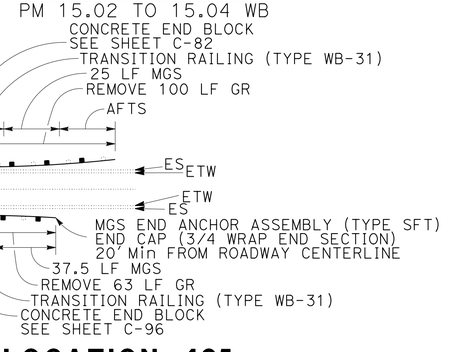

LOCATION 405
PM 15.02 TO 15.04 EB

CONSTRUCTION DETAILS
ROUTE 16 (Yol)

NO SCALE

C-56

REVISED BY | DATE REVISED
GARY DEKENS | RAIMUND YAMBAO
CALCULATED-DESIGNED BY | CHECKED BY
FUNCTIONAL SUPERVISOR: DEANN SPANGLER
STATE OF CALIFORNIA - DEPARTMENT OF TRANSPORTATION
DESIGN
Caltrans

LAST REVISION 01-22-14 | DATE PLOTTED => 29-MAY-2014 | TIME PLOTTED => 08:43

BORDER LAST REVISED 7/2/2010 | USERNAME => s130875 | DGN FILE => 0300020450ga056.dgn | RELATIVE BORDER SCALE IS IN INCHES 0 1 2 3 | UNIT 0327 | PROJECT NUMBER & PHASE 03000204501

Dist	COUNTY	ROUTE	POST MILES TOTAL PROJECT	SHEET No.	TOTAL SHEETS
03	But,Col,Gln Sut,Yol,Yub	16,32,45 70,113,162	Var	74	195

Raimund Yambao 2-10-14
REGISTERED CIVIL ENGINEER DATE

2-10-14
PLANS APPROVAL DATE

RAIMUND J. YAMBAO No. 80379 Exp. 03-31-15 CIVIL — REGISTERED PROFESSIONAL ENGINEER — STATE OF CALIFORNIA

THE STATE OF CALIFORNIA OR ITS OFFICERS OR AGENTS SHALL NOT BE RESPONSIBLE FOR THE ACCURACY OR COMPLETENESS OF SCANNED COPIES OF THIS PLAN SHEET.

NOTE:

1. FOR ACCURATE RIGHT OF WAY DATA, CONTACT RIGHT OF WAY ENGINEERING AT THE DISTRICT OFFICE.

2. EXISTING UTILITY FACILITIES HAVE NOT BEEN PLOTTED ON THESE PLANS.

LOCATION 429
PM 20.11 TO 20.12 WB

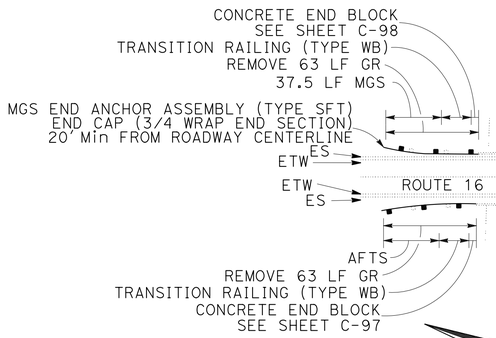

LOCATION 430
PM 20.14 TO 20.15 WB

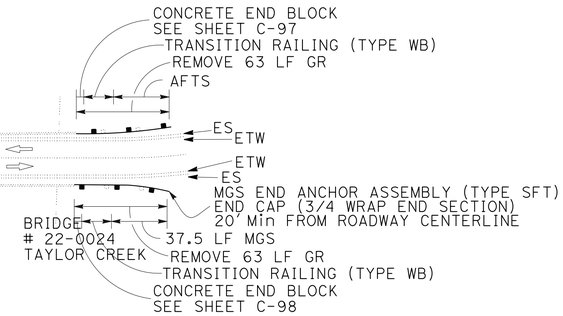

LOCATION 409
PM 20.11 TO 20.12 EB

LOCATION 410
PM 20.14 TO 20.15 EB

LOCATION 427
PM 17.99 TO 18.00 WB

LOCATION 428
PM 18.01 TO 18.03 WB

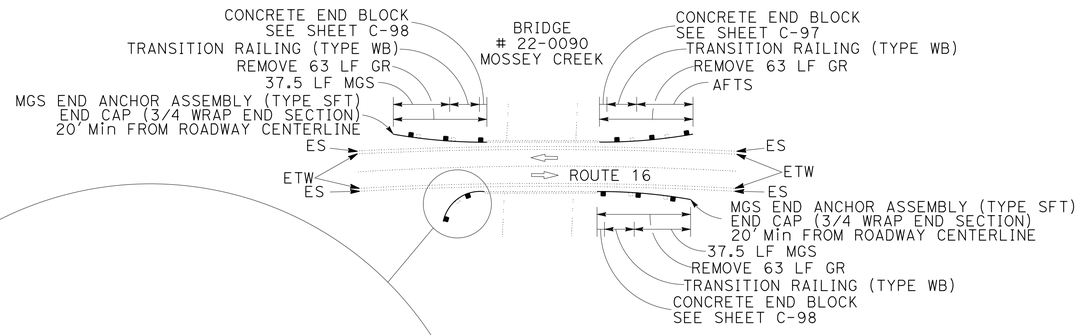

LOCATION 408
PM 18.01 TO 18.03 EB

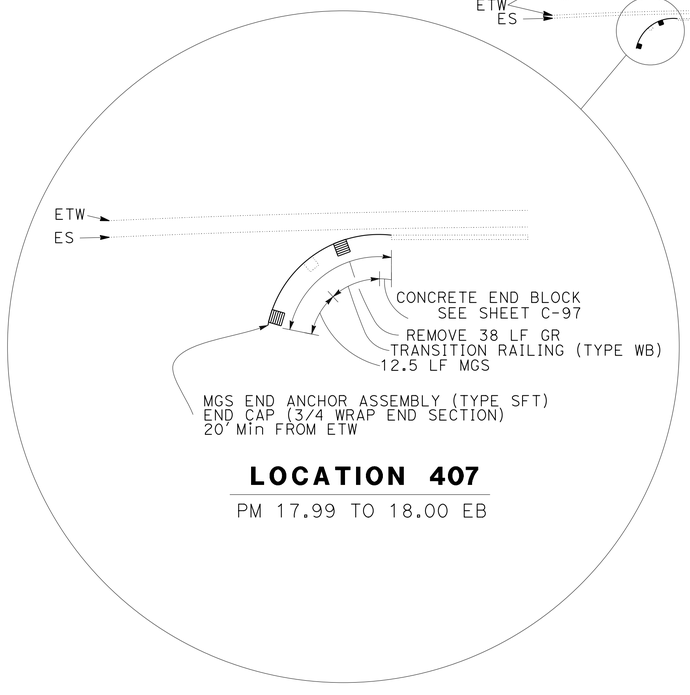

LOCATION 407
PM 17.99 TO 18.00 EB

LOCATION 438
PM 11.44 TO 11.48 SB
FOR DETAILS NOT SHOWN, SEE SSP A77R3 TYPE 16B LAYOUT

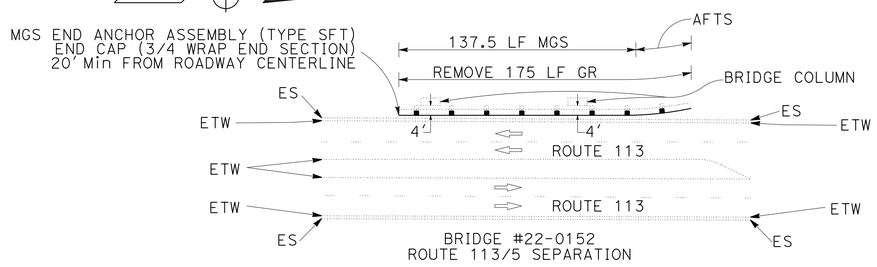

LOCATION 431
PM 11.74 TO 11.76 NB

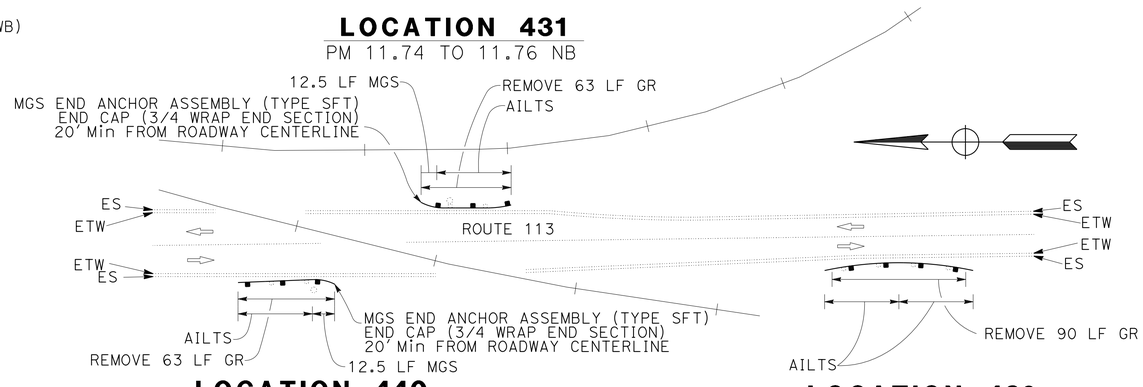

LOCATION 440
PM 11.78 TO 11.80 SB

LOCATION 439
PM 11.70 TO 11.72 SB

CONSTRUCTION DETAILS
ROUTE 16, 113 (Yol)
NO SCALE

C-57

LAST REVISION 01-22-14
DATE PLOTTED => 29-MAY-2014
TIME PLOTTED => 08:43

STATE OF CALIFORNIA - DEPARTMENT OF TRANSPORTATION
Caltrans®
DESIGN
FUNCTIONAL SUPERVISOR: DEANN SPANGLER
CALCULATED-DESIGNED BY: GARY DEKENS
CHECKED BY: RAIMUND YAMBAO
REVISED BY
DATE REVISED

BORDER LAST REVISED 7/2/2010
USERNAME => s130875
DGN FILE => 0300020450ga057.dgn
RELATIVE BORDER SCALE IS IN INCHES 0 1 2 3
UNIT 0327
PROJECT NUMBER & PHASE 03000204501

Dist	COUNTY	ROUTE	POST MILES TOTAL PROJECT	SHEET No.	TOTAL SHEETS
03	But,Col,Gln Sut,Yol,Yub	16,32,45 70,113,162	Var	75	195

Raimund Yambao 2-10-14
REGISTERED CIVIL ENGINEER DATE

2-10-14
PLANS APPROVAL DATE

REGISTERED PROFESSIONAL ENGINEER
RAIMUND J. YAMBAO
No. 80379
Exp. 03-31-15
CIVIL
STATE OF CALIFORNIA

THE STATE OF CALIFORNIA OR ITS OFFICERS OR AGENTS SHALL NOT BE RESPONSIBLE FOR THE ACCURACY OR COMPLETENESS OF SCANNED COPIES OF THIS PLAIN SHEET.

NOTE:

1. FOR ACCURATE RIGHT OF WAY DATA, CONTACT RIGHT OF WAY ENGINEERING AT THE DISTRICT OFFICE.

2. EXISTING UTILITY FACILITIES HAVE NOT BEEN PLOTTED ON THESE PLANS.

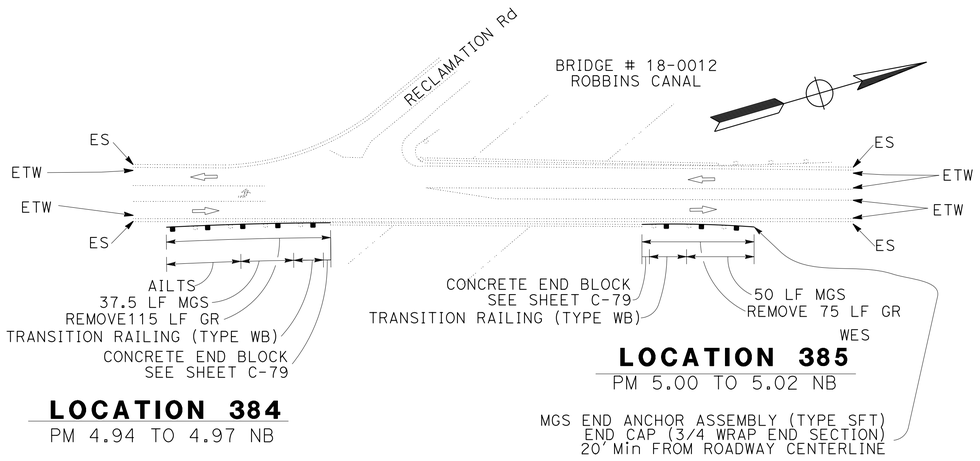

LOCATION 384
PM 4.94 TO 4.97 NB

LOCATION 385
PM 5.00 TO 5.02 NB

ROUTE 113 (SUT)

LOCATION 434
PM 13.14 TO 13.16 NB

LOCATION 433
PM 13.08 TO 13.09 NB

LOCATION 432
PM 13.06 TO 13.07 NB

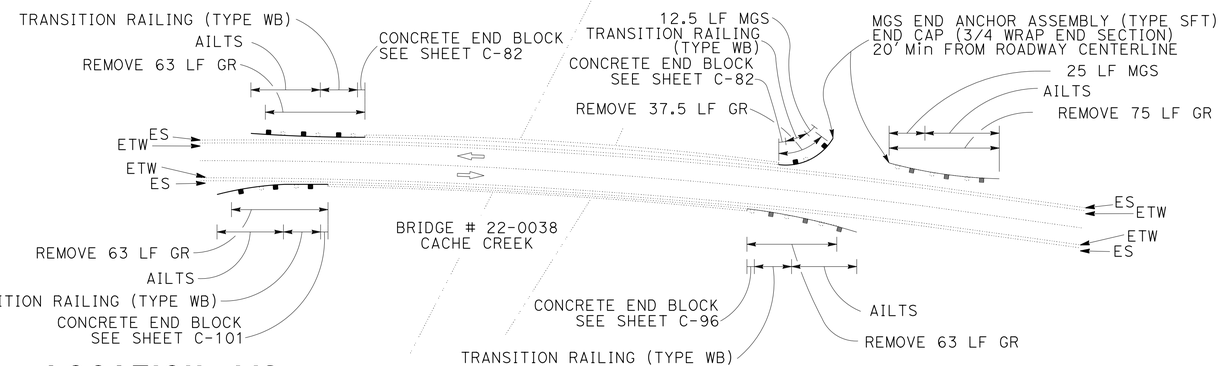

LOCATION 442
PM 13.14 TO 13.16 SB

LOCATION 441
PM 13.07 TO 13.09 SB

LOCATION 443
PM M21.24 TO M21.26 SB

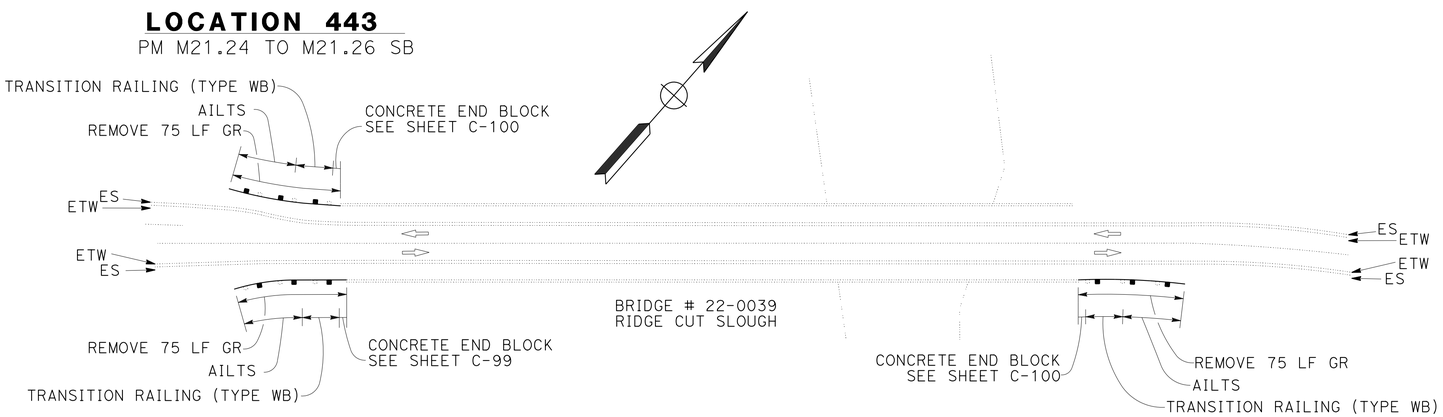

LOCATION 435
PM M21.24 TO M21.26 NB

LOCATION 436
PM R21.34 TO R21.36 NB

LOCATION 437
PM 21.97 TO 21.98 NB

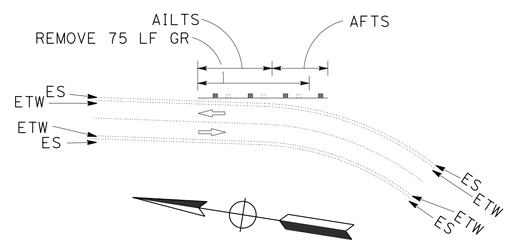

CONSTRUCTION DETAILS
ROUTE 113 (Yol, Sut)
NO SCALE

C-58

STATE OF CALIFORNIA - DEPARTMENT OF TRANSPORTATION
DESIGN
FUNCTIONAL SUPERVISOR: DEANN SPANGLER
CALCULATED-DESIGNED BY
CHECKED BY
GARY DEKENS
RAIMUND YAMBAO
REVISED BY
DATE REVISED

LAST REVISION: DATE PLOTTED => 29-MAY-2014
01-23-14 TIME PLOTTED => 08:43

Dist	COUNTY	ROUTE	POST MILES TOTAL PROJECT	SHEET No.	TOTAL SHEETS
03	But,Col,Gln Sut,Yol,Yub	16,32,45 70,113,162	Var	76	195

REGISTERED CIVIL ENGINEER — 2-10-14 DATE

2-10-14
PLANS APPROVAL DATE

ERIC NORMAN SOUZA
No. 75706
Exp. 06-30-14
CIVIL
REGISTERED PROFESSIONAL ENGINEER
STATE OF CALIFORNIA

THE STATE OF CALIFORNIA OR ITS OFFICERS OR AGENTS SHALL NOT BE RESPONSIBLE FOR THE ACCURACY OR COMPLETENESS OF SCANNED COPIES OF THIS PLAN SHEET.

NOTE:

1. EXISTING UTILITY FACILITIES HAVE NOT BEEN PLOTTED ON THESE PLANS.

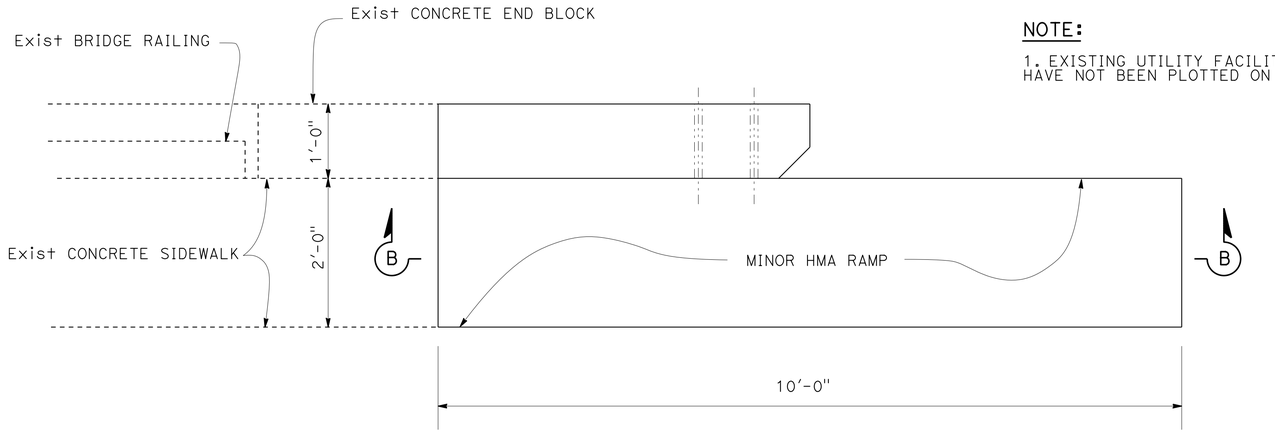

PLAN

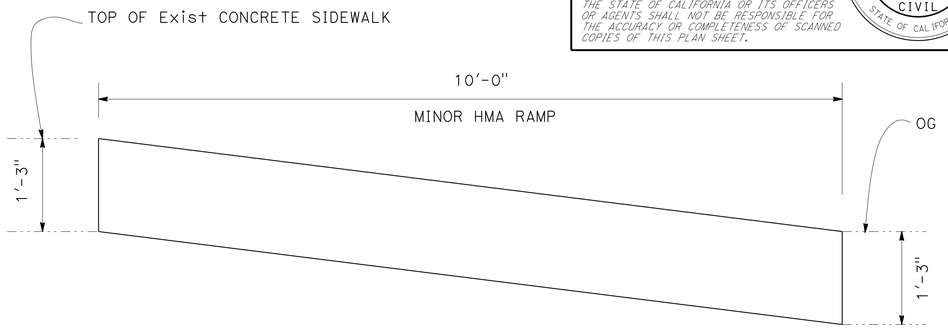

SECTION B-B

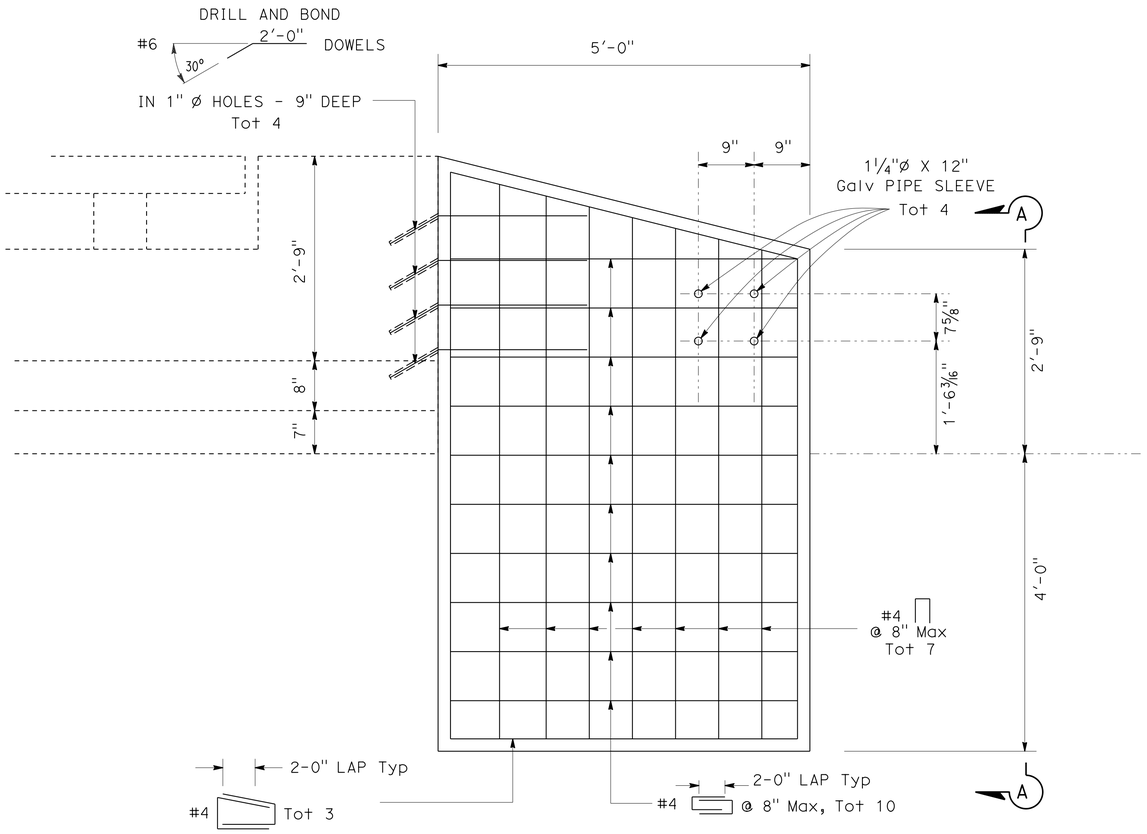

ELEVATION

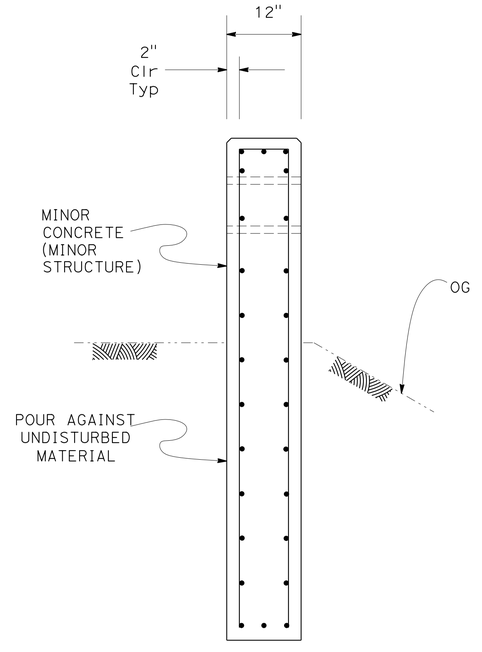

VIEW A-A

ROUTE 16 (Col)

LOCATIONS : 206,207,209,210,218,219,222,223

CONSTRUCTION DETAILS

NO SCALE

C-59

STATE OF CALIFORNIA - DEPARTMENT OF TRANSPORTATION
Caltrans®
TRAFFIC
FUNCTIONAL SUPERVISOR: STEPHEN WRIGHT
CALCULATED-DESIGNED BY: AL G. CHIN
CHECKED BY: ERIC SOUZA
REVISED BY
DATE REVISED

LAST REVISION 11-05-13
DATE PLOTTED => 29-MAY-2014
TIME PLOTTED => 08:44

BORDER LAST REVISED 7/2/2010
USERNAME => s130875
DGN FILE => 0300020450ga059.dgn
RELATIVE BORDER SCALE IS IN INCHES 0 1 2 3
UNIT 0399
PROJECT NUMBER & PHASE 03000204501

Dist	COUNTY	ROUTE	POST MILES TOTAL PROJECT	SHEET No.	TOTAL SHEETS
03	But,Col,Gln Sut,Yol,Yub	16,32,45 70,113,162	Var	77	195

REGISTERED CIVIL ENGINEER — DATE 2-10-14

PLANS APPROVAL DATE 2-10-14

REGISTERED PROFESSIONAL ENGINEER — ERIC NORMAN SOUZA No. 75706 Exp. 06-30-14 CIVIL — STATE OF CALIFORNIA

THE STATE OF CALIFORNIA OR ITS OFFICERS OR AGENTS SHALL NOT BE RESPONSIBLE FOR THE ACCURACY OR COMPLETENESS OF SCANNED COPIES OF THIS PLAN SHEET.

NOTE:

1. EXISTING UTILITY FACILITIES HAVE NOT BEEN PLOTTED ON THESE PLANS.

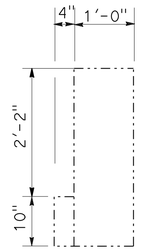

SECTION B-B

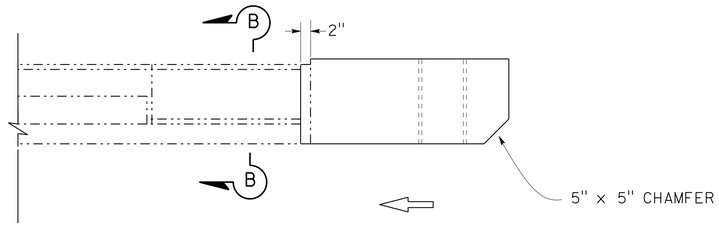

PLAN

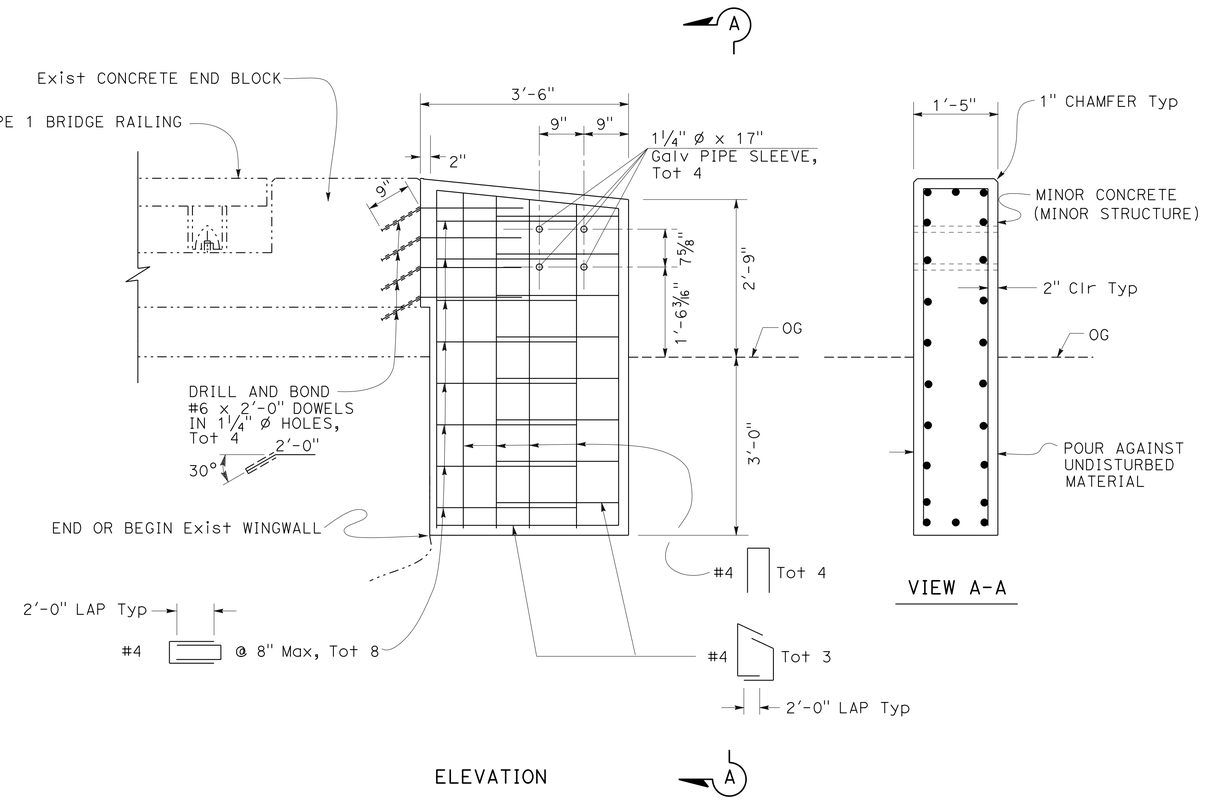

ELEVATION

VIEW A-A

CONCRETE END BLOCK DETAIL

ROUTE 32 (But)

LOCATIONS : 2,3,4,5,6,7,8,9,10,11,23,24,25,27,28,29,30,31,32

CONSTRUCTION DETAILS

NO SCALE

C-60

STATE OF CALIFORNIA - DEPARTMENT OF TRANSPORTATION — Caltrans® — TRAFFIC

FUNCTIONAL SUPERVISOR: STEPHEN WRIGHT

CALCULATED-DESIGNED BY: AL G. CHIN

CHECKED BY: ERIC SOUZA

REVISED BY	DATE REVISED

LAST REVISION 11-04-13 — DATE PLOTTED => 29-MAY-2014 — TIME PLOTTED => 08:44

Dist	COUNTY	ROUTE	POST MILES TOTAL PROJECT	SHEET No.	TOTAL SHEETS
03	But,Col,Gln Sut,Yol,Yub	16,32,45 70,113,162	Var	78	195

REGISTERED CIVIL ENGINEER — 2-10-14 DATE

PLANS APPROVAL DATE — 2-10-14

REGISTERED PROFESSIONAL ENGINEER — ERIC NORMAN SOUZA — No. 75706 — Exp. 06-30-14 — CIVIL — STATE OF CALIFORNIA

THE STATE OF CALIFORNIA OR ITS OFFICERS OR AGENTS SHALL NOT BE RESPONSIBLE FOR THE ACCURACY OR COMPLETENESS OF SCANNED COPIES OF THIS PLAN SHEET.

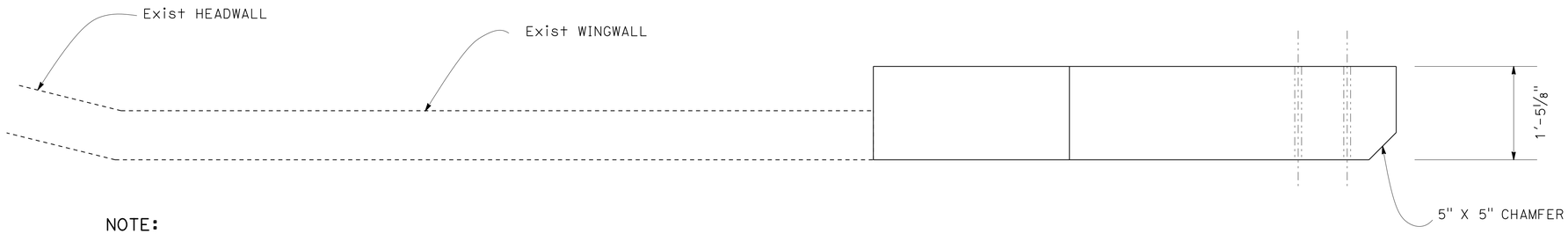

PLAN

NOTE:

1. EXISTING UTILITY FACILITIES HAVE NOT BEEN PLOTTED ON THESE PLANS.

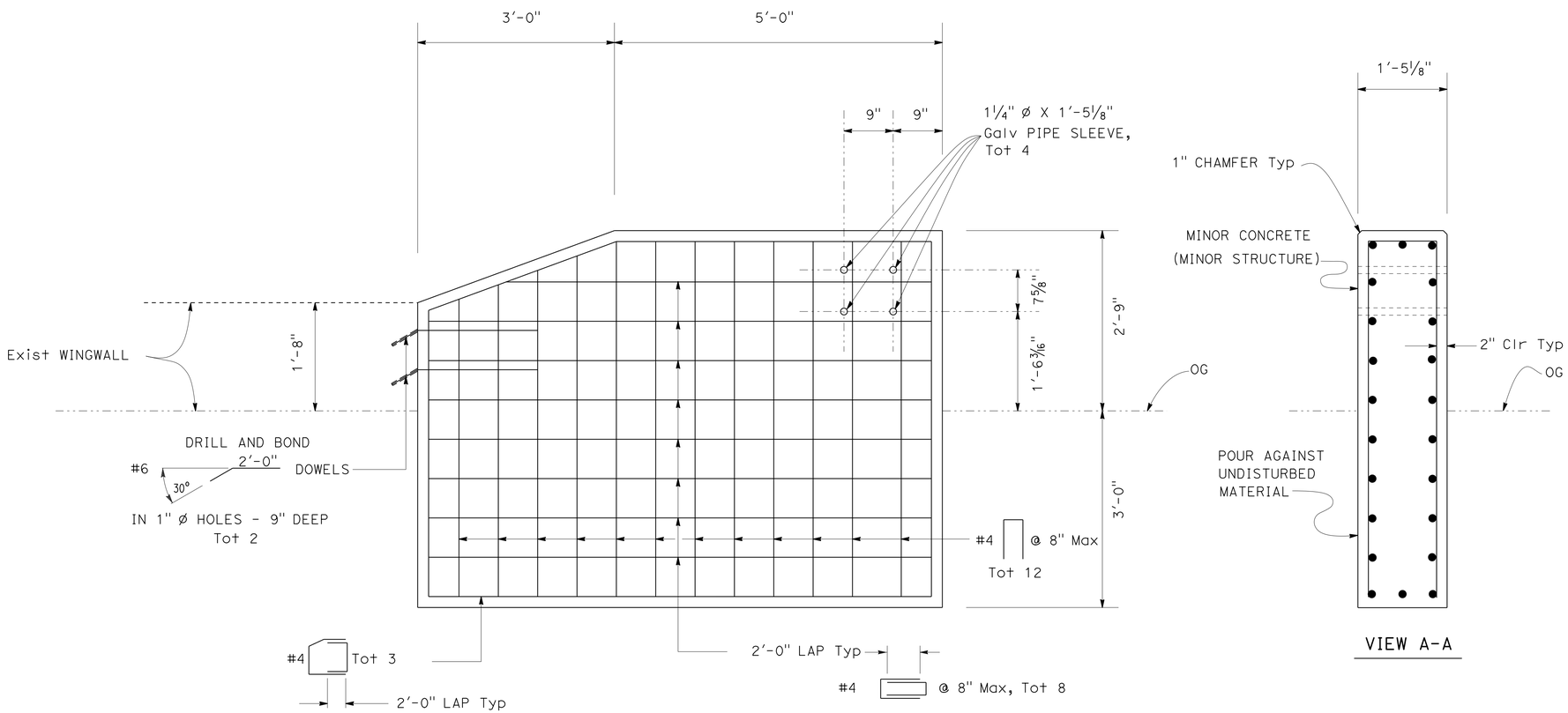

ELEVATION

VIEW A-A

CONCRETE END BLOCK DETAIL

ROUTE 45 (Col)

LOCATIONS : 234

CONSTRUCTION DETAILS

NO SCALE

C-61

STATE OF CALIFORNIA - DEPARTMENT OF TRANSPORTATION — Caltrans® — TRAFFIC

FUNCTIONAL SUPERVISOR: STEPHEN WRIGHT

CALCULATED-DESIGNED BY: AL G. CHIN

CHECKED BY: ERIC SOUZA

REVISED BY	DATE REVISED

LAST REVISION — DATE PLOTTED => 29-MAY-2014 — TIME PLOTTED => 08:44 — 11-04-13

BORDER LAST REVISED 7/2/2010

USERNAME => s130875
DGN FILE => 0300020450ga061.dgn

RELATIVE BORDER SCALE IS IN INCHES 0 1 2 3

UNIT 0399

PROJECT NUMBER & PHASE 03000204501

Dist	COUNTY	ROUTE	POST MILES TOTAL PROJECT	SHEET No.	TOTAL SHEETS
03	But,Col,Gln Sut,Yol,Yub	16,32,45 70,113,162	Var	79	195

REGISTERED CIVIL ENGINEER — DATE 2-10-14

PLANS APPROVAL DATE 2-10-14

REGISTERED PROFESSIONAL ENGINEER — ERIC NORMAN SOUZA No. 75706 Exp. 06-30-14 CIVIL — STATE OF CALIFORNIA

THE STATE OF CALIFORNIA OR ITS OFFICERS OR AGENTS SHALL NOT BE RESPONSIBLE FOR THE ACCURACY OR COMPLETENESS OF SCANNED COPIES OF THIS PLAN SHEET.

NOTE:

1. EXISTING UTILITY FACILITIES HAVE NOT BEEN PLOTTED ON THESE PLANS.

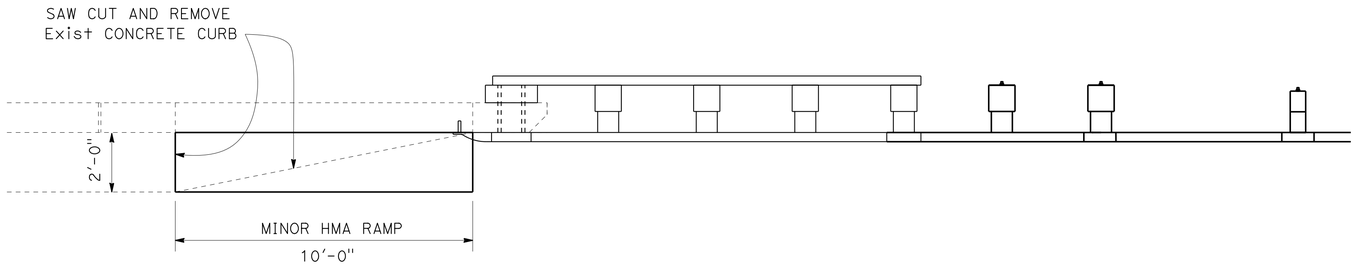

PLAN

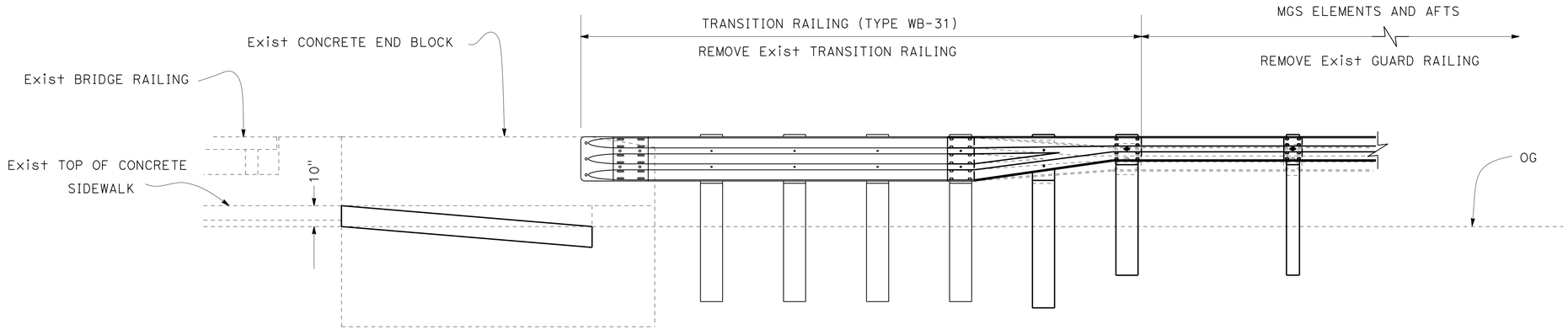

ELEVATION

MINOR HMA RAMP DETAIL

ROUTE 70 (But)

LOCATIONS : 37,93

CONSTRUCTION DETAILS

NO SCALE

C-62

STATE OF CALIFORNIA - DEPARTMENT OF TRANSPORTATION — Caltrans® TRAFFIC

FUNCTIONAL SUPERVISOR: STEPHEN WRIGHT

CALCULATED-DESIGNED BY: AL G. CHIN

CHECKED BY: ERIC SOUZA

REVISED BY	DATE REVISED

LAST REVISION: 11-04-13 — DATE PLOTTED => 29-MAY-2014 — TIME PLOTTED => 08:44

Dist	COUNTY	ROUTE	POST MILES TOTAL PROJECT	SHEET No.	TOTAL SHEETS
03	But,Col,Gln Sut,Yol,Yub	16,32,45 70,113,162	Var	80	195

2-10-14
REGISTERED CIVIL ENGINEER DATE

ERIC NORMAN SOUZA
No. 75706
Exp. 06-30-14
CIVIL
REGISTERED PROFESSIONAL ENGINEER
STATE OF CALIFORNIA

2-10-14
PLANS APPROVAL DATE

THE STATE OF CALIFORNIA OR ITS OFFICERS OR AGENTS SHALL NOT BE RESPONSIBLE FOR THE ACCURACY OR COMPLETENESS OF SCANNED COPIES OF THIS PLAN SHEET.

NOTE:

1. EXISTING UTILITY FACILITIES HAVE NOT BEEN PLOTTED ON THESE PLANS.

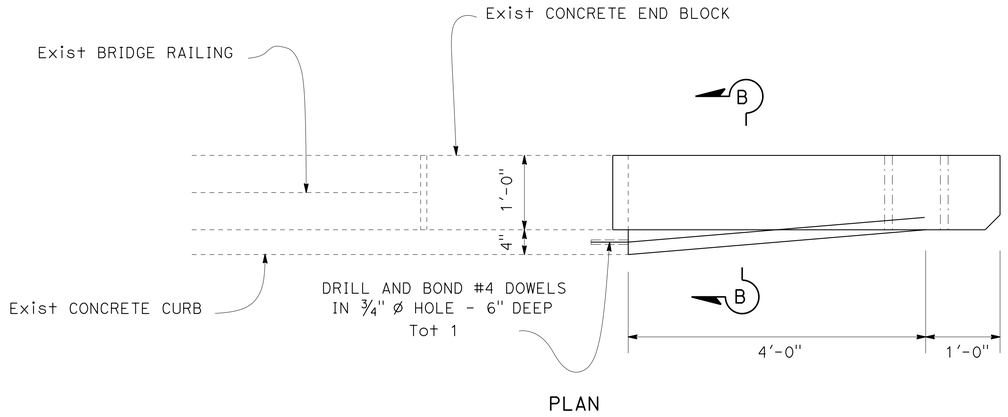

PLAN

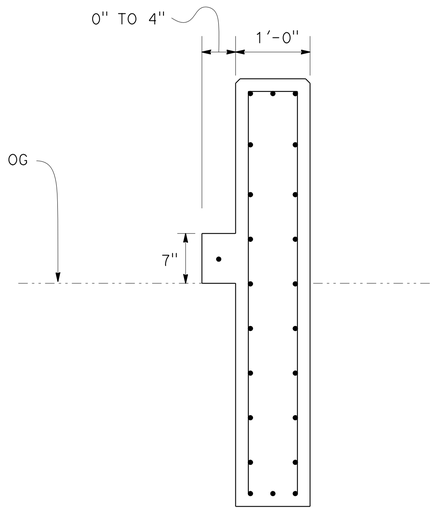

SECTION B-B

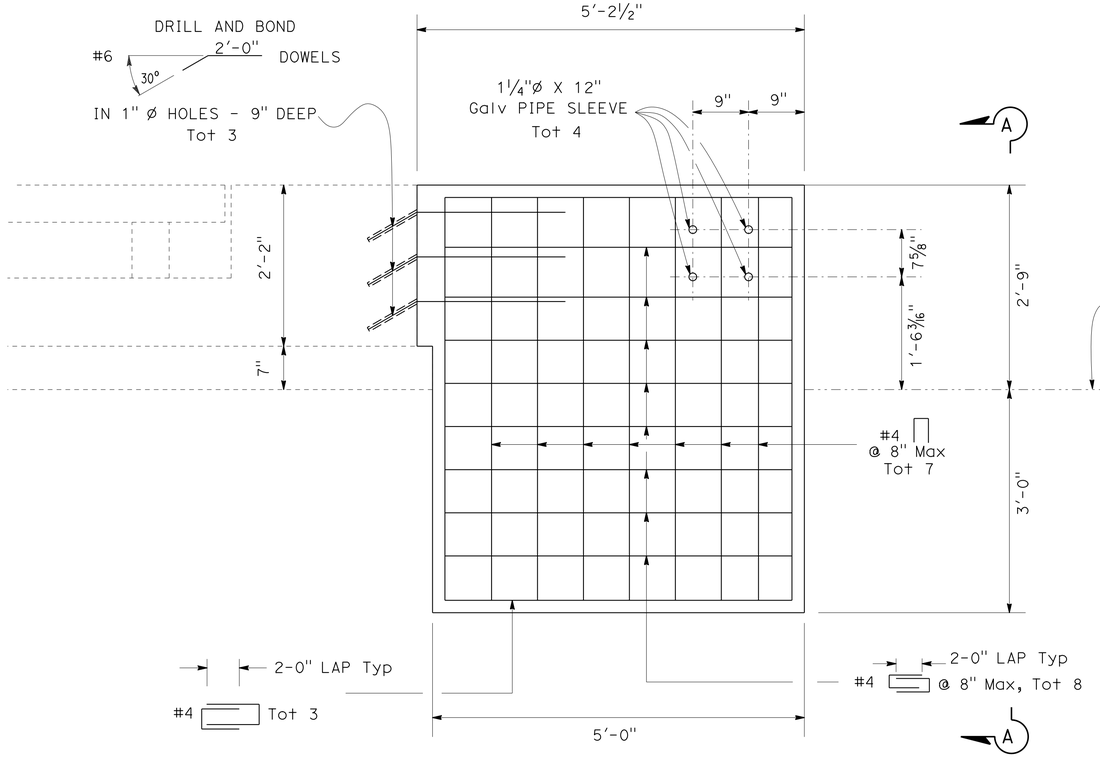

ELEVATION

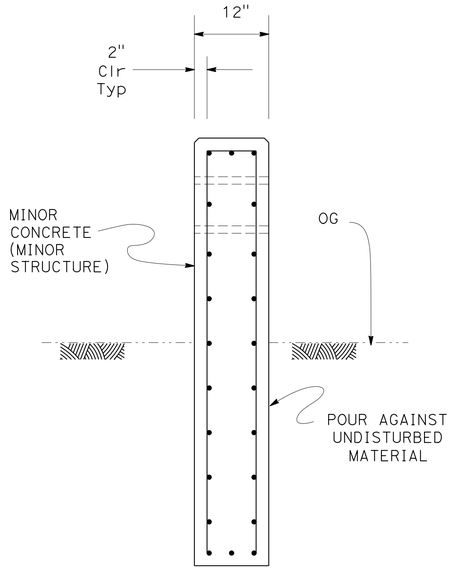

VIEW A-A

CONCRETE END BLOCK DETAILS

ROUTE 70 (But)

LOCATIONS : 39,95

CONSTRUCTION DETAILS

NO SCALE

C-63

CALCULATED-DESIGNED BY: AL G. CHIN
CHECKED BY: ERIC SOUZA
FUNCTIONAL SUPERVISOR: STEPHEN WRIGHT
STATE OF CALIFORNIA - DEPARTMENT OF TRANSPORTATION
Caltrans® TRAFFIC

REVISED BY | DATE REVISED

LAST REVISION 00-00-00
DATE PLOTTED => 29-MAY-2014
TIME PLOTTED => 08:44

BORDER LAST REVISED 7/2/2010
USERNAME => s130875
DGN FILE => 0300020450ga063.dgn
RELATIVE BORDER SCALE IS IN INCHES 0 1 2 3
UNIT 0399
PROJECT NUMBER & PHASE 03000204501

Dist	COUNTY	ROUTE	POST MILES TOTAL PROJECT	SHEET No.	TOTAL SHEETS
03	But,Col,Gln Sut,Yol,Yub	16,32,45 70,113,162	Var	81	195

REGISTERED CIVIL ENGINEER — DATE: 2-10-14

PLANS APPROVAL DATE: 2-10-14

ERIC NORMAN SOUZA No. 75706 Exp. 06-30-14 CIVIL — REGISTERED PROFESSIONAL ENGINEER — STATE OF CALIFORNIA

THE STATE OF CALIFORNIA OR ITS OFFICERS OR AGENTS SHALL NOT BE RESPONSIBLE FOR THE ACCURACY OR COMPLETENESS OF SCANNED COPIES OF THIS PLAN SHEET.

NOTE:

1. EXISTING UTILITY FACILITIES HAVE NOT BEEN PLOTTED ON THESE PLANS.

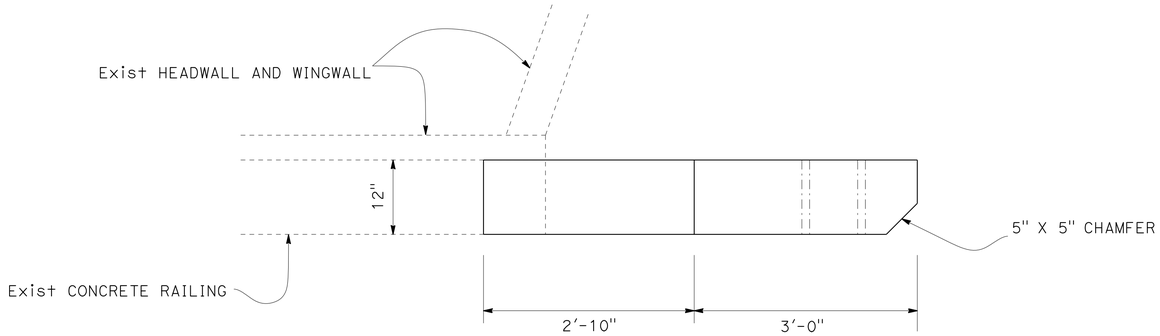

PLAN

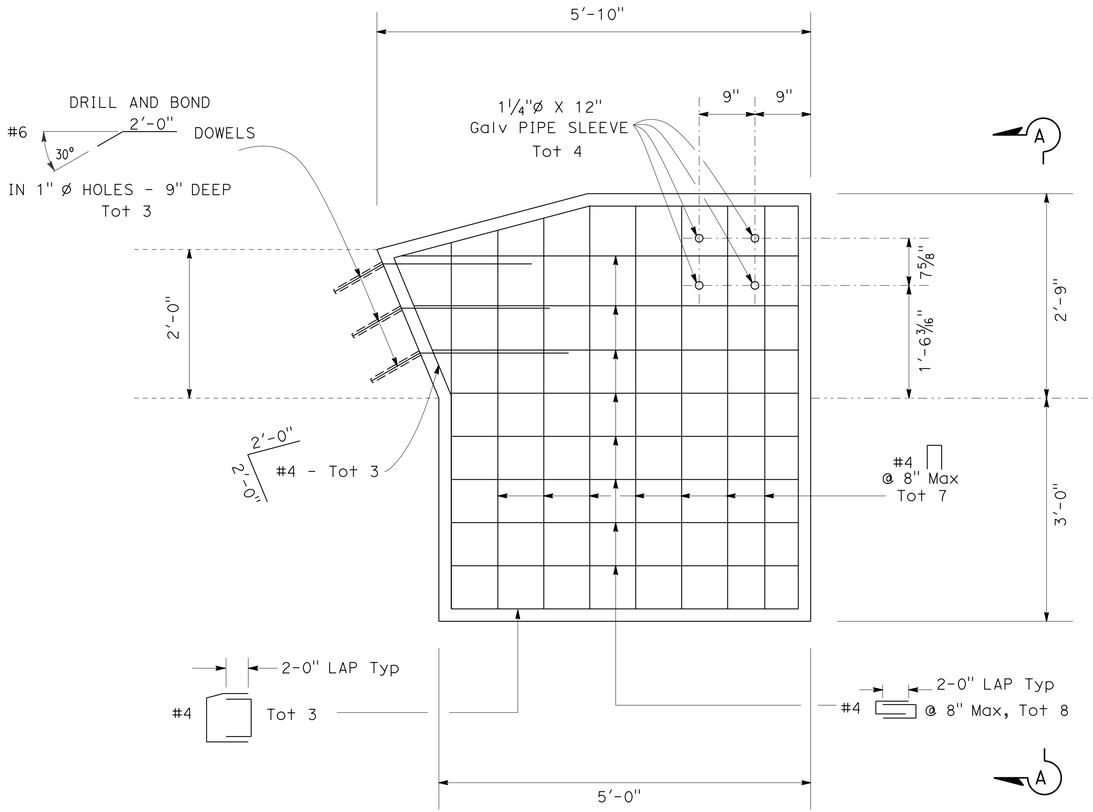

ELEVATION

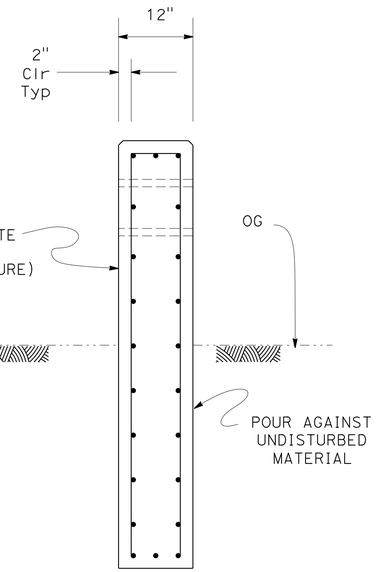

VIEW A-A

CONCRETE END BLOCK DETAILS

ROUTE 70 (But)

LOCATIONS : 42

CONSTRUCTION DETAILS

NO SCALE

C-64

STATE OF CALIFORNIA - DEPARTMENT OF TRANSPORTATION — TRAFFIC

FUNCTIONAL SUPERVISOR: STEPHEN WRIGHT

CALCULATED-DESIGNED BY: AL G. CHIN

CHECKED BY: ERIC SOUZA

REVISED BY / DATE REVISED

LAST REVISION 11-05-13 | DATE PLOTTED => 29-MAY-2014 | TIME PLOTTED => 08:44

BORDER LAST REVISED 7/2/2010 | USERNAME => s130875 | DGN FILE => 0300020450ga064.dgn | RELATIVE BORDER SCALE IS IN INCHES 0 1 2 3 | UNIT 0399 | PROJECT NUMBER & PHASE 03000204501

Dist	COUNTY	ROUTE	POST MILES TOTAL PROJECT	SHEET No.	TOTAL SHEETS
03	But,Col,Gln Sut,Yol,Yub	16,32,45 70,113,162	Var	82	195

REGISTERED CIVIL ENGINEER — 2-10-14 DATE

PLANS APPROVAL DATE — 2-10-14

REGISTERED PROFESSIONAL ENGINEER — ERIC NORMAN SOUZA No. 75706 Exp.06-30-14 CIVIL — STATE OF CALIFORNIA

THE STATE OF CALIFORNIA OR ITS OFFICERS OR AGENTS SHALL NOT BE RESPONSIBLE FOR THE ACCURACY OR COMPLETENESS OF SCANNED COPIES OF THIS PLAN SHEET.

NOTE:

1. EXISTING UTILITY FACILITIES HAVE NOT BEEN PLOTTED ON THESE PLANS.

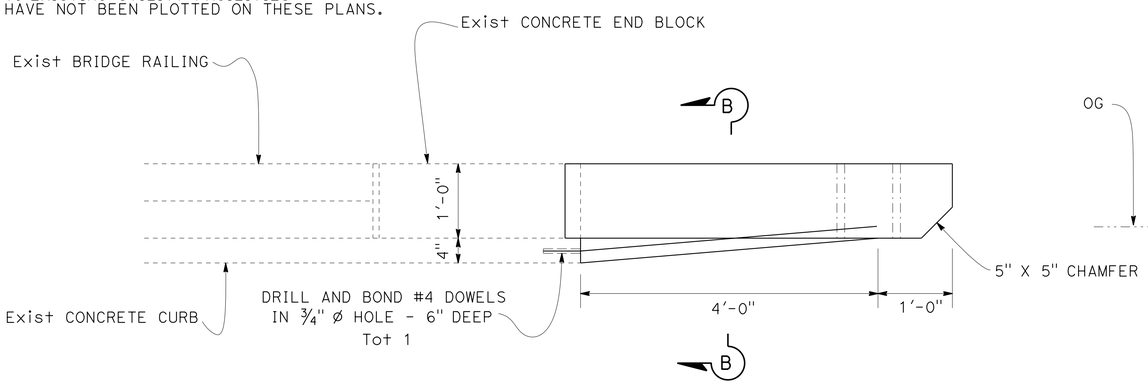

PLAN

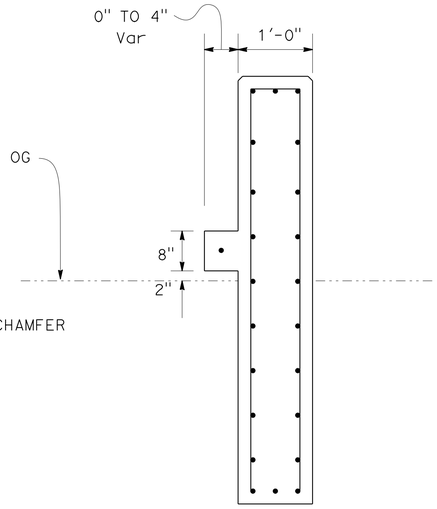

SECTION B-B

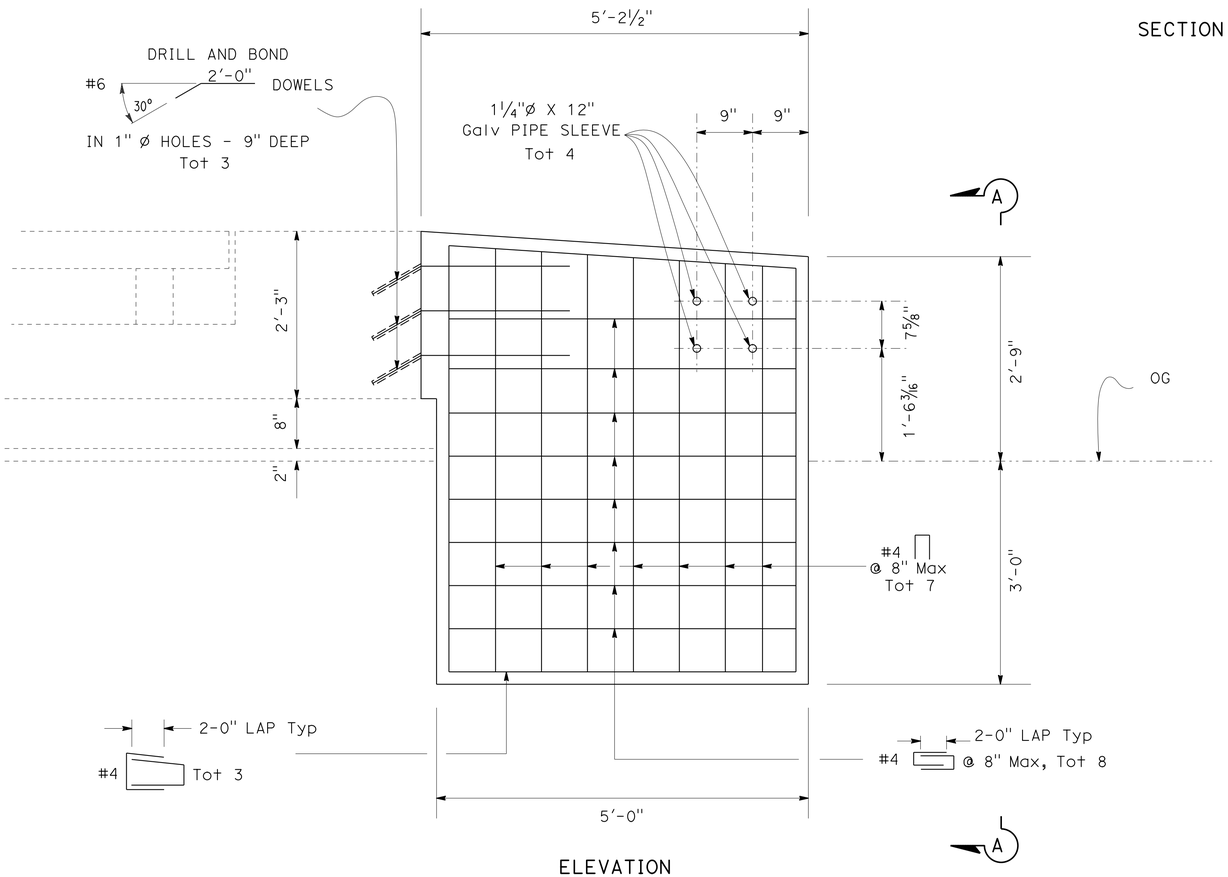

ELEVATION

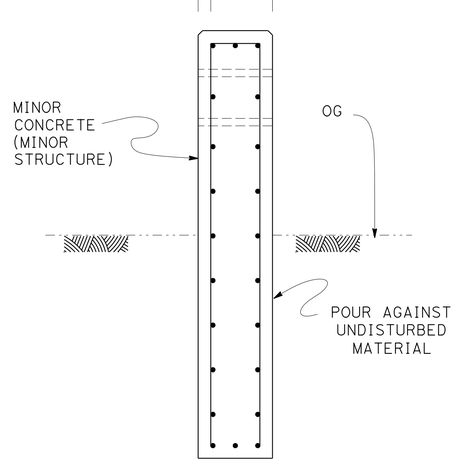

VIEW A-A

CONCRETE END BLOCK DETAILS

ROUTE 70 (But)

LOCATIONS : 43

CONSTRUCTION DETAILS

NO SCALE

C-65

CALCULATED-DESIGNED BY	CHECKED BY	REVISED BY	DATE REVISED
AL G. CHIN	ERIC SOUZA		

FUNCTIONAL SUPERVISOR: STEPHEN WRIGHT

STATE OF CALIFORNIA - DEPARTMENT OF TRANSPORTATION

Caltrans®

TRAFFIC

LAST REVISION: 11-05-13 | DATE PLOTTED => 29-MAY-2014 | TIME PLOTTED => 08:44

BORDER LAST REVISED 7/2/2010 | USERNAME => s130875 | DGN FILE => 0300020450ga065.dgn | RELATIVE BORDER SCALE IS IN INCHES 0 1 2 3 | UNIT 0399 | PROJECT NUMBER & PHASE 03000204501

Dist	COUNTY	ROUTE	POST MILES TOTAL PROJECT	SHEET No.	TOTAL SHEETS
03	But,Col,Gln Sut,Yol,Yub	16,32,45 70,113,162	Var	83	195

2-10-14
REGISTERED CIVIL ENGINEER DATE

2-10-14
PLANS APPROVAL DATE

REGISTERED PROFESSIONAL ENGINEER
ERIC NORMAN SOUZA
No. 75706
Exp. 06-30-14
CIVIL
STATE OF CALIFORNIA

THE STATE OF CALIFORNIA OR ITS OFFICERS OR AGENTS SHALL NOT BE RESPONSIBLE FOR THE ACCURACY OR COMPLETENESS OF SCANNED COPIES OF THIS PLAN SHEET.

NOTE:

1. EXISTING UTILITY FACILITIES HAVE NOT BEEN PLOTTED ON THESE PLANS.

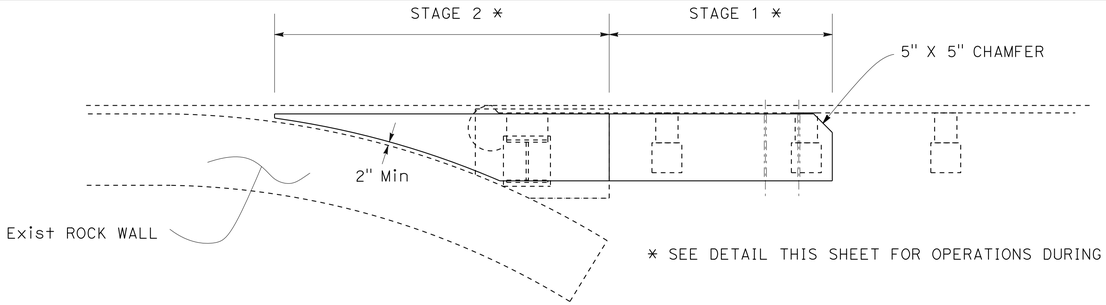

* SEE DETAIL THIS SHEET FOR OPERATIONS DURING EACH STAGE

DETAIL A

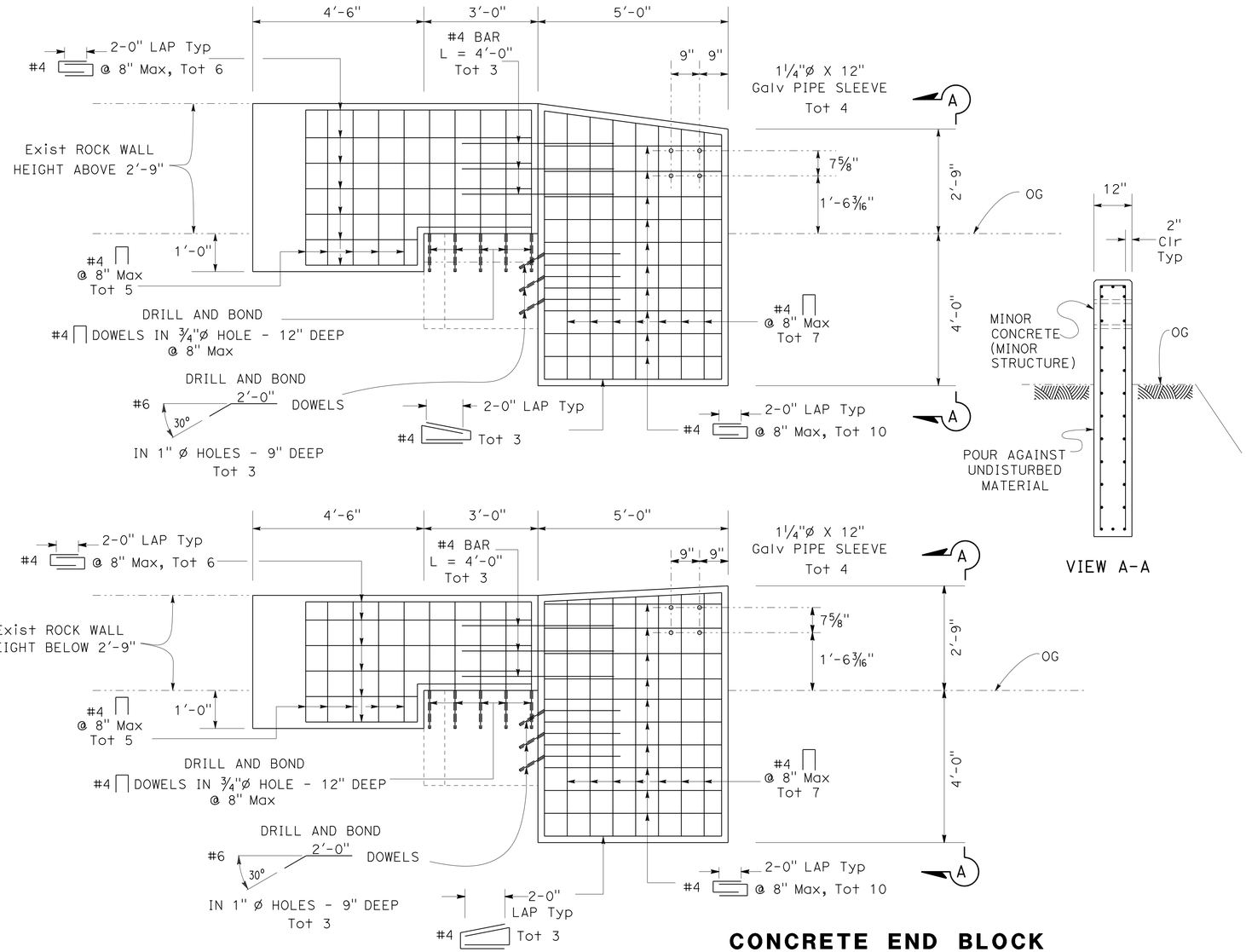

CONCRETE END BLOCK

ROUTE 70 (But)

LOCATIONS : 71,72,73,74,75,78,79,81,82,83,85,86,87,88,131,132,134,135,136,137,138,139,140,141,142

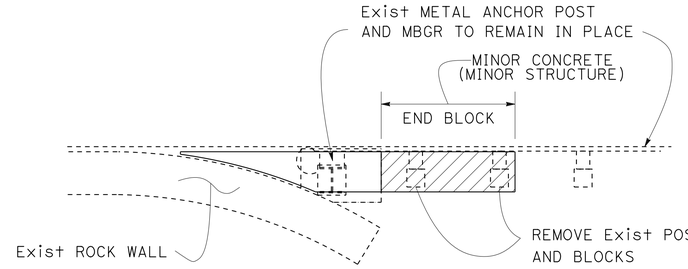

STAGE 1 NOTES

1. REMOVE FIRST TWO WOOD POST AND BLOCK, METAL ANCHOR POST AND MBGR REMAIN IN PLACE, TO PROTECT NEW END BLOCK DURING CURING.
2. CONSTRUCT CONCRETE END BLOCK PER DETAIL THIS SHEET.

STAGE 1 (SEE DETAIL A FOR STAGE 1 CONSTRUCTION THIS SHEET)

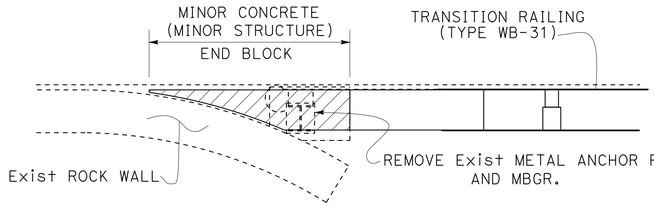

1. REMOVE Exist METAL ANCHOR POST AND MBGR.
2. ATTACH TRANSITION RAILING (TYPE WB) TO NEW CONCRETE END BLOCK.
3. CONSTRUCT CONCRETE END BLOCK PER DETAIL THIS SHEET.

STAGE 2 (SEE DETAIL A FOR STAGE 2 CONSTRUCTION THIS SHEET)

CONSTRUCTION DETAILS

NO SCALE

C-66

LAST REVISION | DATE PLOTTED => 29-MAY-2014
11-05-13 | TIME PLOTTED => 08:44

STATE OF CALIFORNIA - DEPARTMENT OF TRANSPORTATION
Caltrans®
TRAFFIC
FUNCTIONAL SUPERVISOR: STEPHEN WRIGHT
CALCULATED-DESIGNED BY: AL G. CHIN
CHECKED BY: ERIC SOUZA
REVISED BY | DATE REVISED

Dist	COUNTY	ROUTE	POST MILES TOTAL PROJECT	SHEET No.	TOTAL SHEETS
03	But,Col,Gln Sut,Yol,Yub	16,32,45 70,113,162	Var	84	195

REGISTERED CIVIL ENGINEER — 2-10-14 DATE

ERIC NORMAN SOUZA No. 75706 Exp. 06-30-14 CIVIL — REGISTERED PROFESSIONAL ENGINEER — STATE OF CALIFORNIA

2-10-14
PLANS APPROVAL DATE

THE STATE OF CALIFORNIA OR ITS OFFICERS OR AGENTS SHALL NOT BE RESPONSIBLE FOR THE ACCURACY OR COMPLETENESS OF SCANNED COPIES OF THIS PLAN SHEET.

NOTE:

1. EXISTING UTILITY FACILITIES HAVE NOT BEEN PLOTTED ON THESE PLANS.

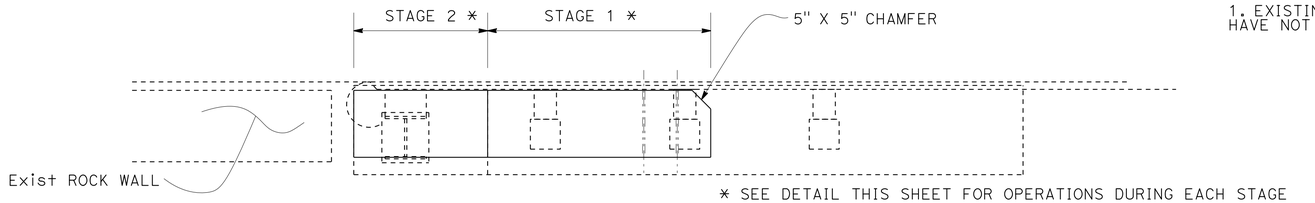

DETAIL B

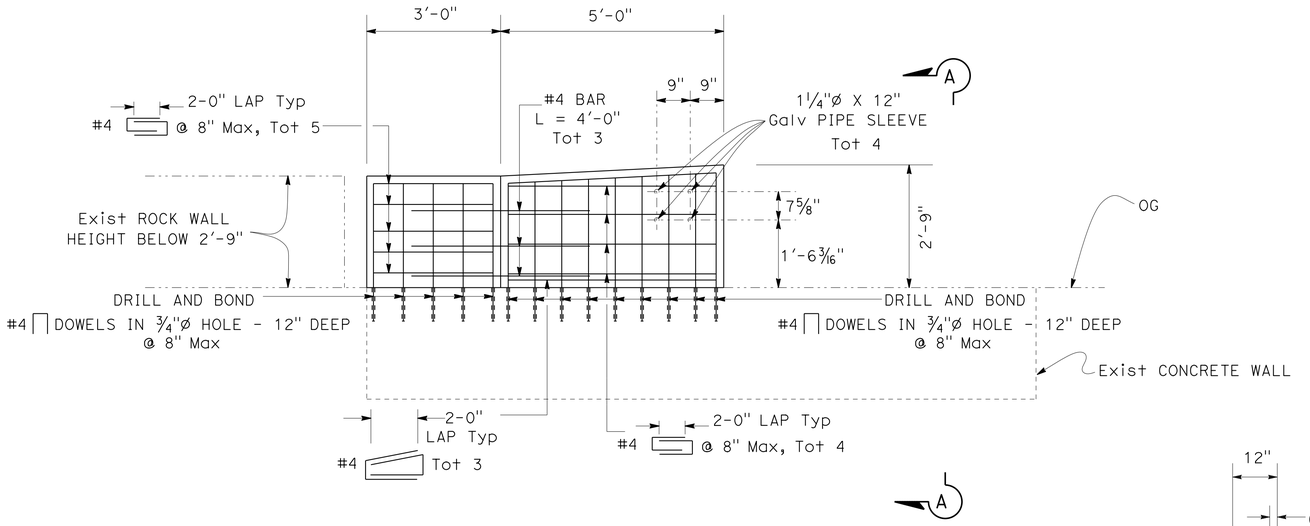

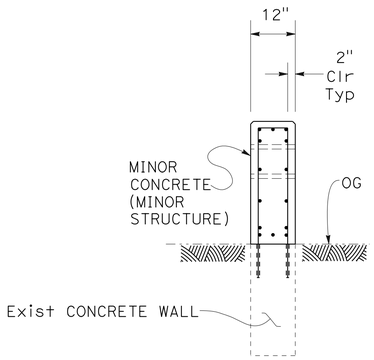

VIEW A-A

CONCRETE END BLOCK

ROUTE 70 (But)

LOCATIONS : 84

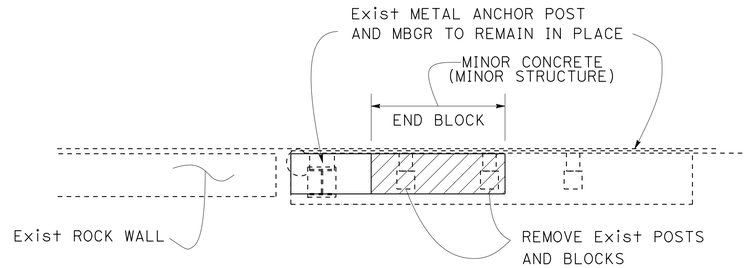

STAGE 1 NOTES

1. REMOVE FIRST TWO WOOD POST AND BLOCK, METAL ANCHOR POST AND MBGR REMAIN IN PLACE, TO PROTECT NEW END BLOCK DURING CURING.
2. CONSTRUCT CONCRETE END BLOCK PER DETAIL THIS SHEET.

STAGE 1 (SEE DETAIL B FOR STAGE 1 CONSTRUCTION THIS SHEET)

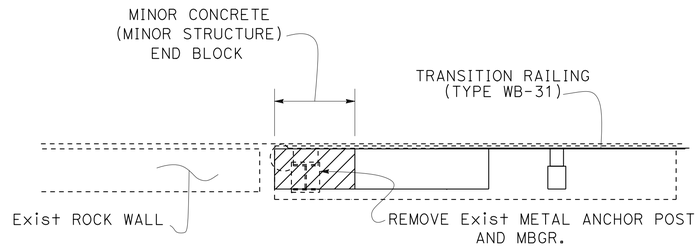

1. REMOVE Exist METAL ANCHOR POST AND MBGR.
2. ATTACH TRANSITION RAILING (TYPE WB) TO NEW CONCRETE END BLOCK.
3. CONSTRUCT CONCRETE END BLOCK PER DETAIL THIS SHEET.

STAGE 2 (SEE DETAIL B FOR STAGE 2 CONSTRUCTION THIS SHEET)

CONSTRUCTION DETAILS

NO SCALE

C-67

LAST REVISION 11-05-13 | DATE PLOTTED => 29-MAY-2014 | TIME PLOTTED => 08:44

STATE OF CALIFORNIA - DEPARTMENT OF TRANSPORTATION — TRAFFIC

FUNCTIONAL SUPERVISOR: STEPHEN WRIGHT

CALCULATED-DESIGNED BY: AL G. CHIN

CHECKED BY: ERIC SOUZA

DETAILED BY

REVISED BY | DATE REVISED

BORDER LAST REVISED 7/2/2010 | USERNAME => s130875 | DGN FILE => 0300020450ga067.dgn | RELATIVE BORDER SCALE IS IN INCHES 0 1 2 3 | UNIT 0399 | PROJECT NUMBER & PHASE 03000204501

Dist	COUNTY	ROUTE	POST MILES TOTAL PROJECT	SHEET No.	TOTAL SHEETS
03	But,Col,Gln Sut,Yol,Yub	16,32,45 70,113,162	Var	85	195

REGISTERED CIVIL ENGINEER — DATE 2-10-14

PLANS APPROVAL DATE 2-10-14

REGISTERED PROFESSIONAL ENGINEER — ERIC NORMAN SOUZA No. 75706 Exp. 06-30-14 CIVIL — STATE OF CALIFORNIA

THE STATE OF CALIFORNIA OR ITS OFFICERS OR AGENTS SHALL NOT BE RESPONSIBLE FOR THE ACCURACY OR COMPLETENESS OF SCANNED COPIES OF THIS PLAN SHEET.

NOTE:

1. EXISTING UTILITY FACILITIES HAVE NOT BEEN PLOTTED ON THESE PLANS.

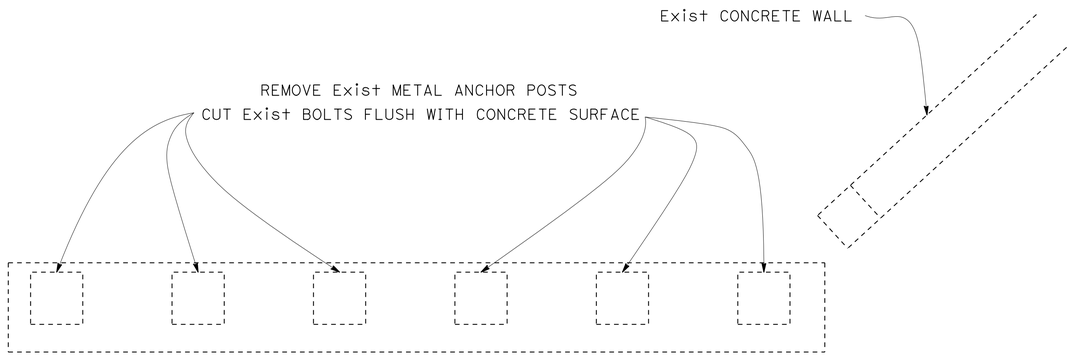

PLAN

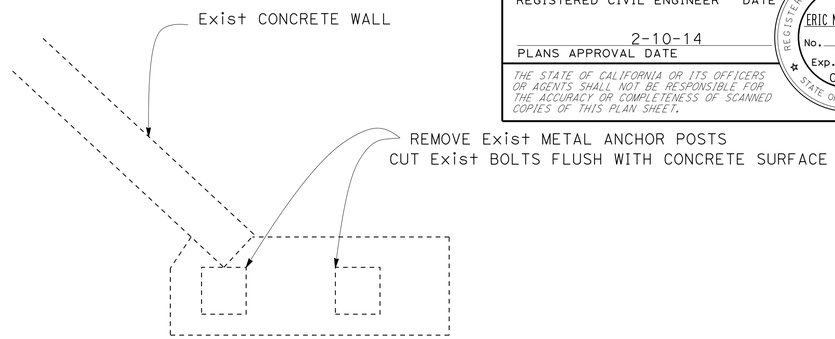

PLAN

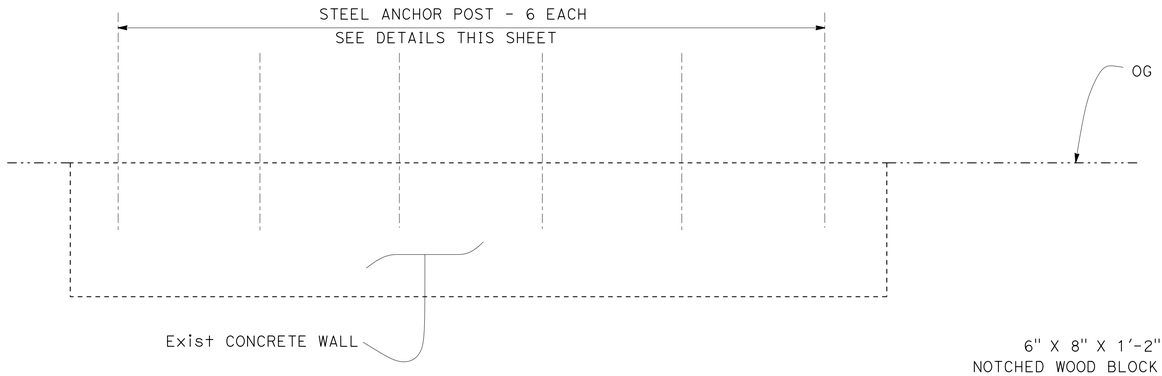

ELEVATION
LOCATION 128
(STEEL POST NOT SHOWN)

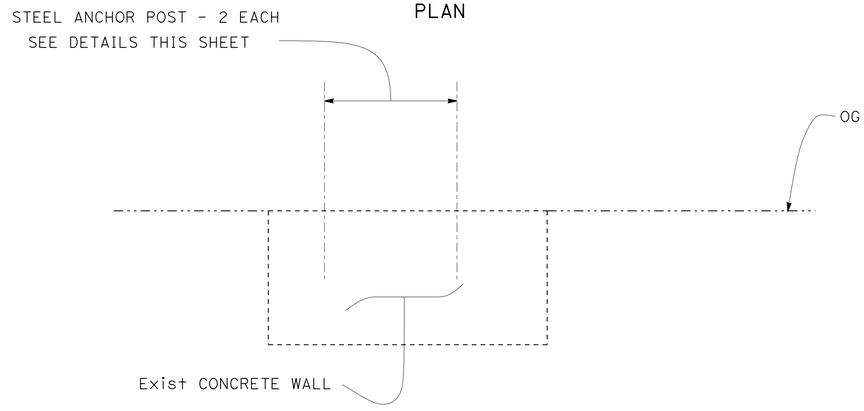

ELEVATION
LOCATION 129
(STEEL POST NOT SHOWN)

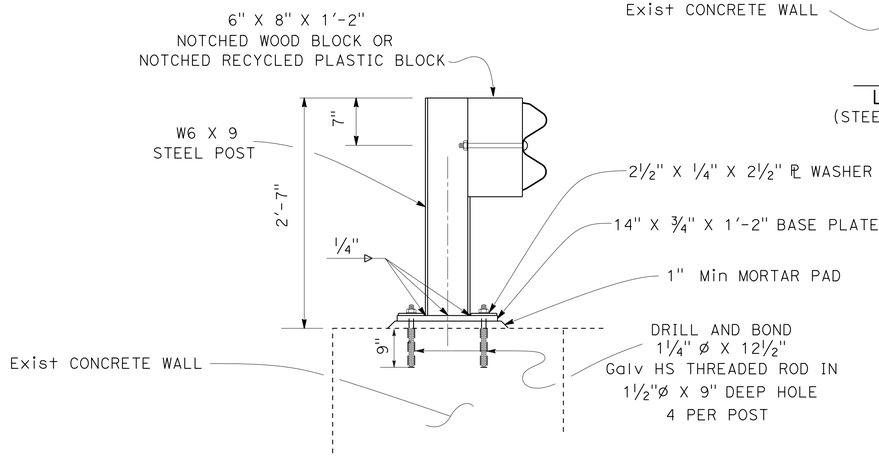

NOTE : FOR DETAILS NOT SHOWN SEE STANDARD PLANS
RSP A77L2, RSP A77N2

STEEL ANCHOR POST DETAILS

ROUTE 70 (But)

LOCATIONS : 128, 129

CONSTRUCTION DETAILS

NO SCALE

C-68

STATE OF CALIFORNIA - DEPARTMENT OF TRANSPORTATION
Caltrans® TRAFFIC
FUNCTIONAL SUPERVISOR: STEPHEN WRIGHT
CALCULATED-DESIGNED BY: AL G. CHIN
CHECKED BY: ERIC SOUZA
REVISED BY / DATE REVISED

LAST REVISION 11-05-13 | DATE PLOTTED => 29-MAY-2014 | TIME PLOTTED => 08:44

Dist	COUNTY	ROUTE	POST MILES TOTAL PROJECT	SHEET No.	TOTAL SHEETS
03	But,Col,Gln Sut,Yol,Yub	16,32,45 70,113,162	Var	86	195

REGISTERED CIVIL ENGINEER — 2-10-14 DATE

PLANS APPROVAL DATE — 2-10-14

REGISTERED PROFESSIONAL ENGINEER — ERIC NORMAN SOUZA No. 75706 Exp. 06-30-14 CIVIL — STATE OF CALIFORNIA

THE STATE OF CALIFORNIA OR ITS OFFICERS OR AGENTS SHALL NOT BE RESPONSIBLE FOR THE ACCURACY OR COMPLETENESS OF SCANNED COPIES OF THIS PLAN SHEET.

NOTE:

1. EXISTING UTILITY FACILITIES HAVE NOT BEEN PLOTTED ON THESE PLANS.

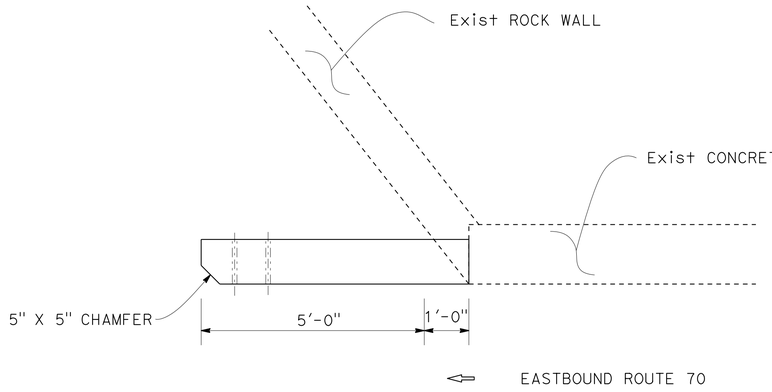

PLAN

Exist P G & E PENSTOCK

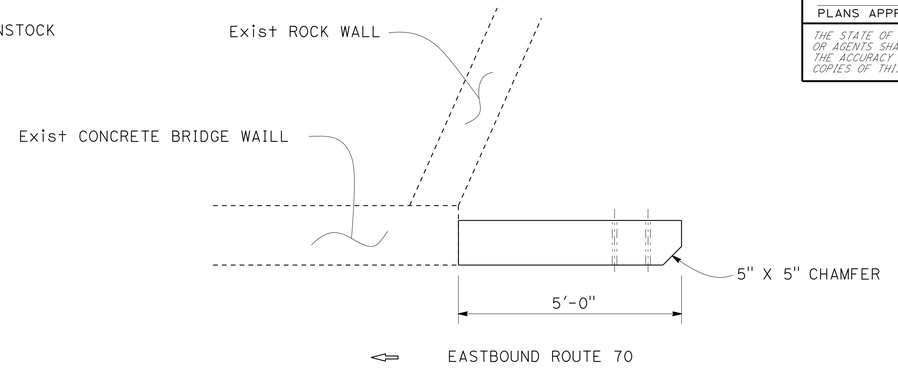

PLAN

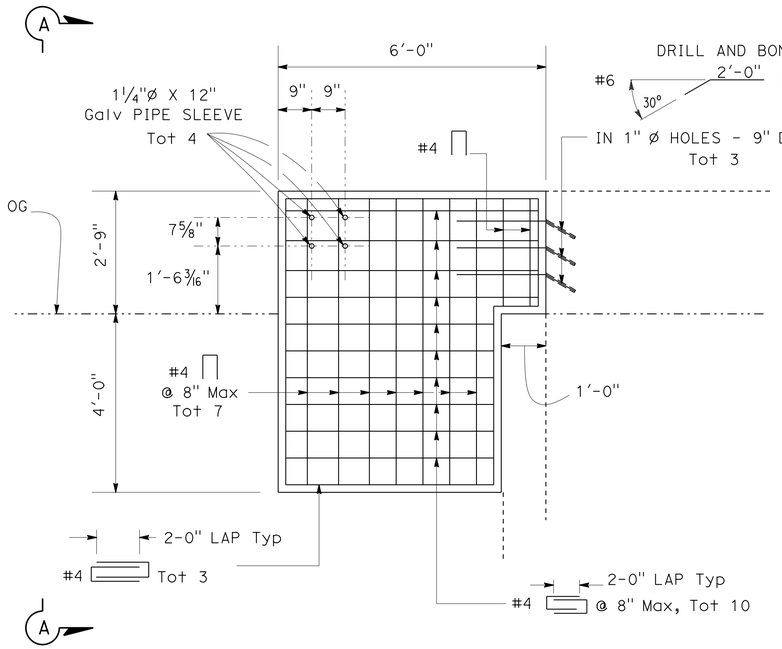

ELEVATION

LOCATION 90

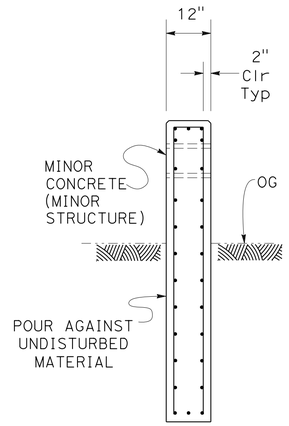

VIEW A-A

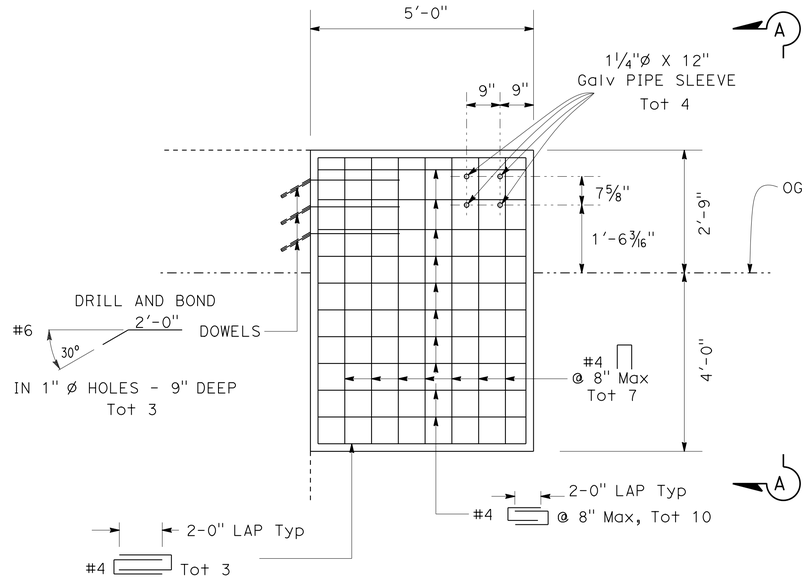

ELEVATION

LOCATION 89

CONCRETE END BLOCK

ROUTE 70 (But)

LOCATIONS : 89, 90

CONSTRUCTION DETAILS

NO SCALE

C-69

LAST REVISION: DATE PLOTTED => 29-MAY-2014
11-05-13 TIME PLOTTED => 08:44

STATE OF CALIFORNIA - DEPARTMENT OF TRANSPORTATION
TRAFFIC
FUNCTIONAL SUPERVISOR: STEPHEN WRIGHT
CALCULATED-DESIGNED BY: AL G. CHIN
CHECKED BY: ERIC SOUZA
REVISED BY
DATE REVISED

Dist	COUNTY	ROUTE	POST MILES TOTAL PROJECT	SHEET No.	TOTAL SHEETS
03	But,Col,Gln Sut,Yol,Yub	16,32,45 70,113,162	Var	87	195

REGISTERED CIVIL ENGINEER — 2-10-14 DATE

ERIC NORMAN SOUZA No. 75706 Exp. 06-30-14 CIVIL — REGISTERED PROFESSIONAL ENGINEER — STATE OF CALIFORNIA

2-10-14
PLANS APPROVAL DATE

THE STATE OF CALIFORNIA OR ITS OFFICERS OR AGENTS SHALL NOT BE RESPONSIBLE FOR THE ACCURACY OR COMPLETENESS OF SCANNED COPIES OF THIS PLAN SHEET.

NOTE:

1. EXISTING UTILITY FACILITIES HAVE NOT BEEN PLOTTED ON THESE PLANS.

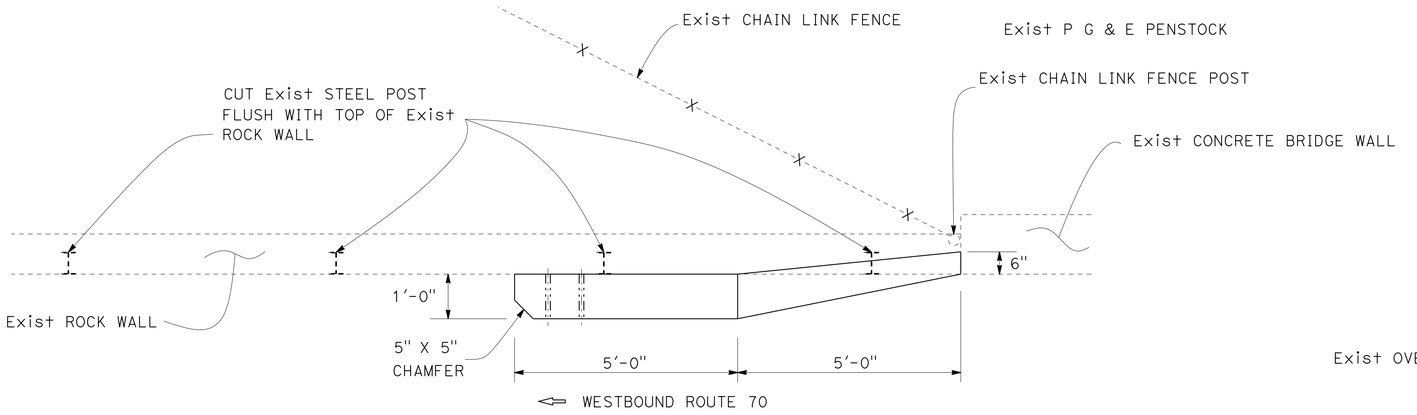

PLAN

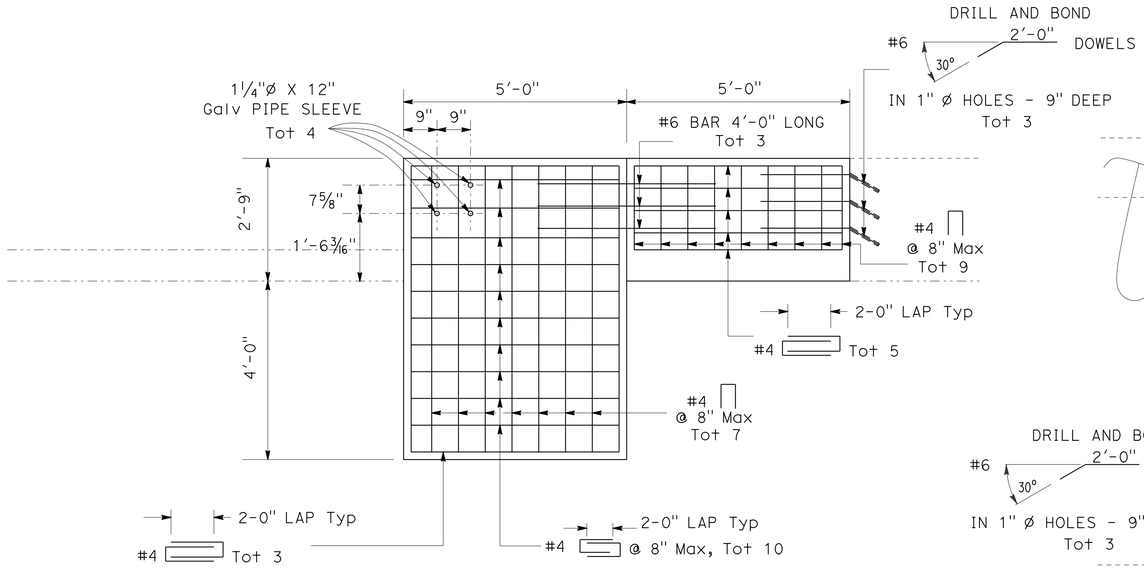

ELEVATION

LOCATIONS 143

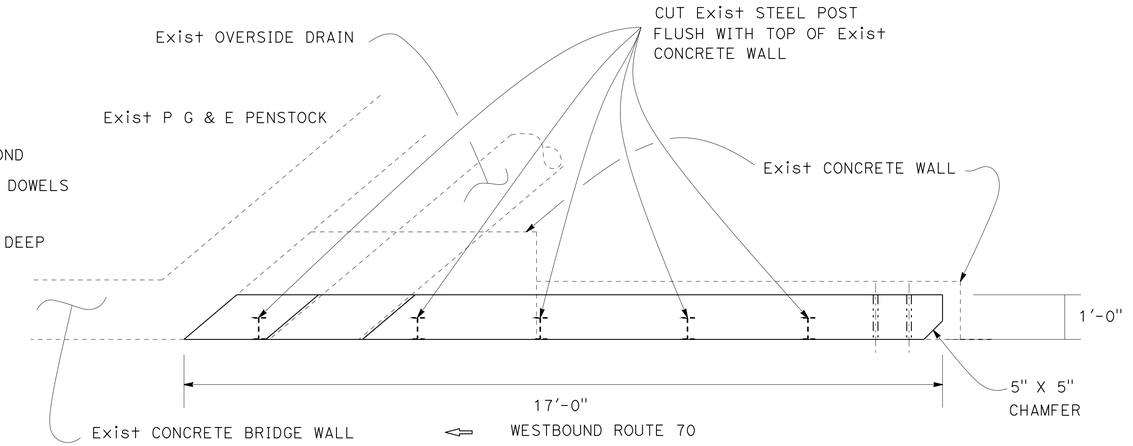

PLAN

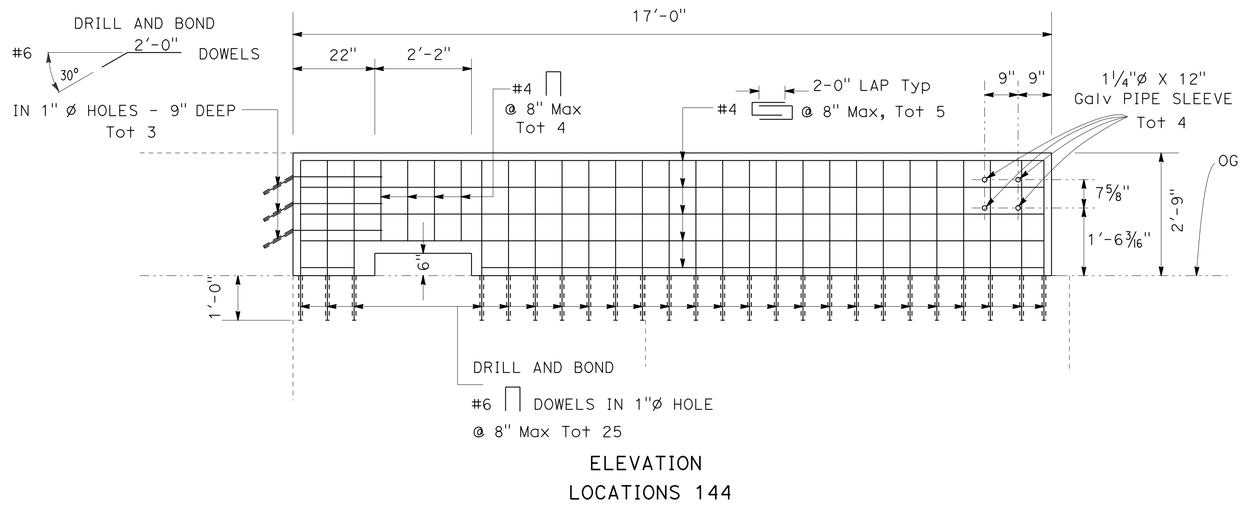

ELEVATION

LOCATIONS 144

CONCRETE END BLOCK

ROUTE 70 (But)

LOCATIONS : 143, 144

CONSTRUCTION DETAILS

NO SCALE

C-70

REVISED BY	DATE REVISED

CALCULATED-DESIGNED BY: AL G. CHIN
CHECKED BY: ERIC SOUZA
FUNCTIONAL SUPERVISOR: STEPHEN WRIGHT

STATE OF CALIFORNIA - DEPARTMENT OF TRANSPORTATION
Caltrans® TRAFFIC

LAST REVISION 11-05-13
DATE PLOTTED => 29-MAY-2014
TIME PLOTTED => 08:44

Dist	COUNTY	ROUTE	POST MILES TOTAL PROJECT	SHEET No.	TOTAL SHEETS
03	But,Col,Gln Sut,Yol,Yub	16,32,45 70,113,162	Var	88	195

REGISTERED CIVIL ENGINEER — 2-10-14 DATE

ERIC NORMAN SOUZA No. 75706 Exp. 06-30-14 CIVIL — REGISTERED PROFESSIONAL ENGINEER — STATE OF CALIFORNIA

2-10-14
PLANS APPROVAL DATE

THE STATE OF CALIFORNIA OR ITS OFFICERS OR AGENTS SHALL NOT BE RESPONSIBLE FOR THE ACCURACY OR COMPLETENESS OF SCANNED COPIES OF THIS PLAN SHEET.

NOTE:

1. EXISTING UTILITY FACILITIES HAVE NOT BEEN PLOTTED ON THESE PLANS.

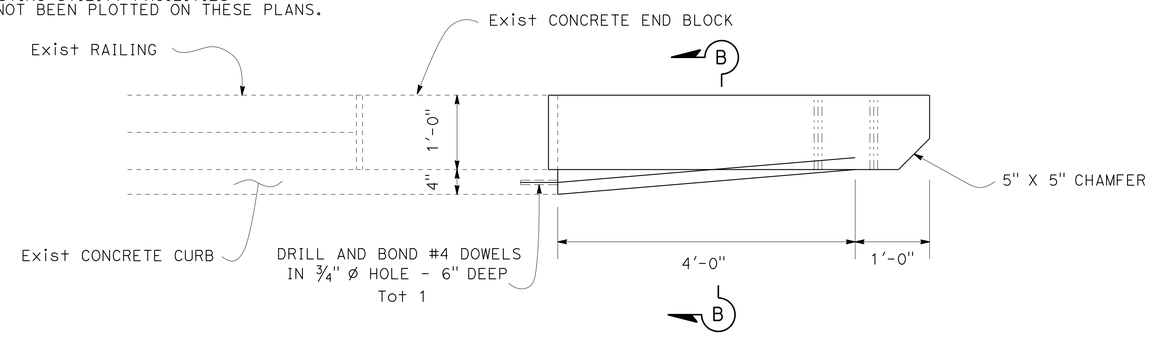

PLAN

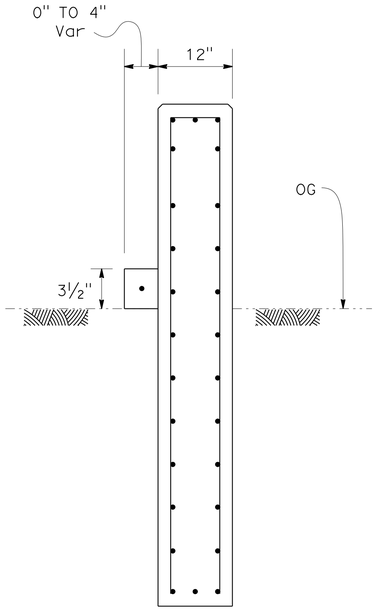

SECTION B-B

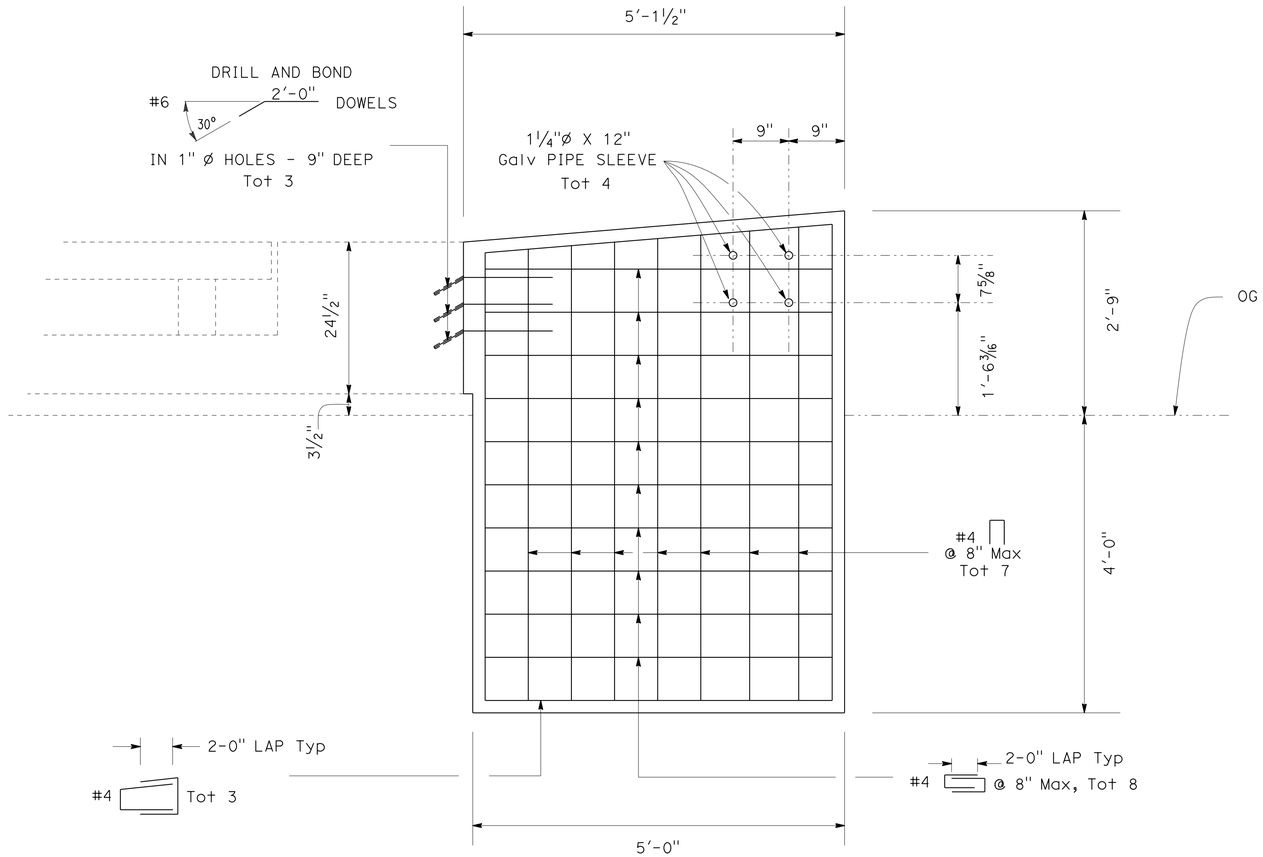

ELEVATION

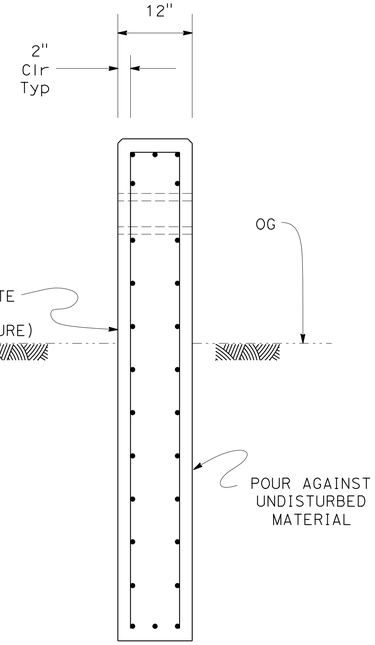

VIEW A-A

CONCRETE END BLOCK

ROUTE 70 (But)

LOCATIONS : 147A, 148

CONSTRUCTION DETAILS

NO SCALE

C-71

STATE OF CALIFORNIA - DEPARTMENT OF TRANSPORTATION
Caltrans®
TRAFFIC
FUNCTIONAL SUPERVISOR: STEPHEN WRIGHT
CALCULATED-DESIGNED BY: AL G. CHIN
CHECKED BY: ERIC SOUZA
REVISED BY
DATE REVISED

LAST REVISION 11-06-13
DATE PLOTTED => 29-MAY-2014
TIME PLOTTED => 08:44

BORDER LAST REVISED 7/2/2010
USERNAME => s130875
DGN FILE => 0300020450ga071.dgn
RELATIVE BORDER SCALE IS IN INCHES 0 1 2 3
UNIT 0399
PROJECT NUMBER & PHASE 03000204501

Dist	COUNTY	ROUTE	POST MILES TOTAL PROJECT	SHEET No.	TOTAL SHEETS
03	But,Col,Gln Sut,Yol,Yub	16,32,45 70,113,162	Var	89	195

REGISTERED CIVIL ENGINEER — DATE 2-10-14

PLANS APPROVAL DATE 2-10-14

REGISTERED PROFESSIONAL ENGINEER — ERIC NORMAN SOUZA No. 75706 Exp. 06-30-14 CIVIL — STATE OF CALIFORNIA

THE STATE OF CALIFORNIA OR ITS OFFICERS OR AGENTS SHALL NOT BE RESPONSIBLE FOR THE ACCURACY OR COMPLETENESS OF SCANNED COPIES OF THIS PLAN SHEET.

NOTE:

1. EXISTING UTILITY FACILITIES HAVE NOT BEEN PLOTTED ON THESE PLANS.

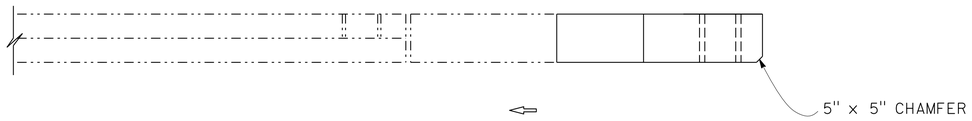

PLAN

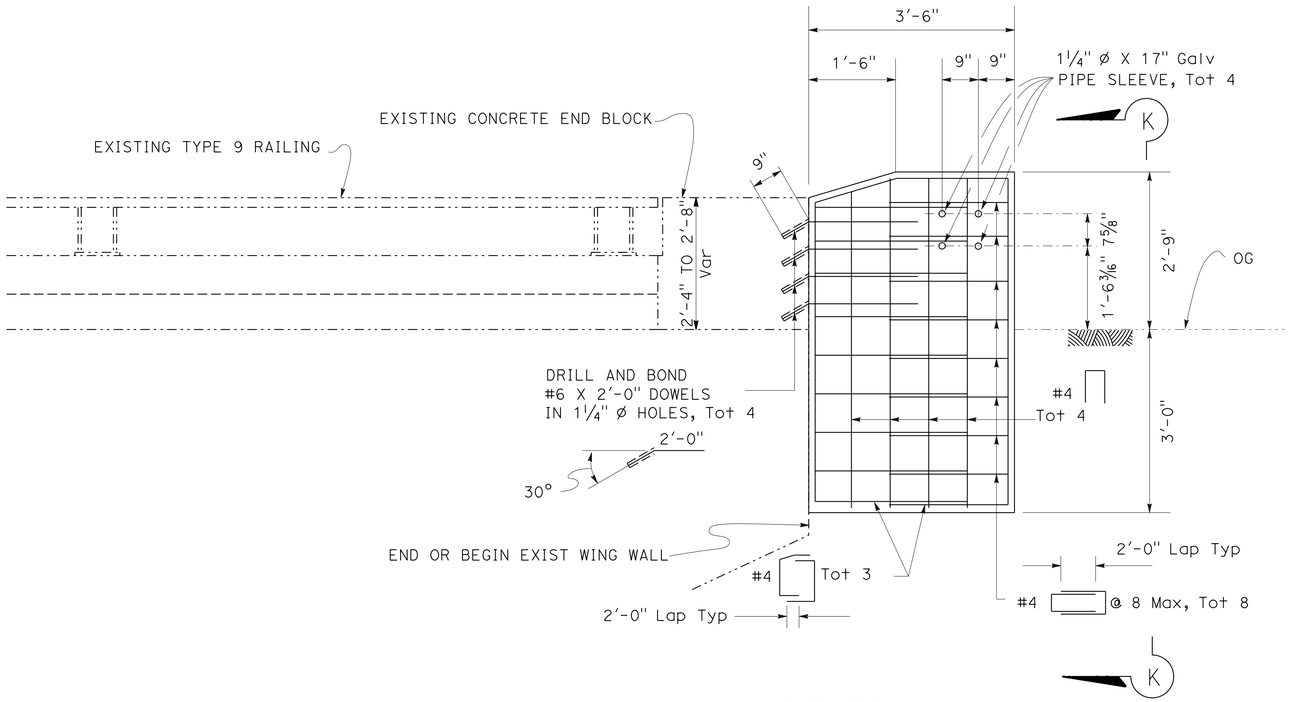

ELEVATION

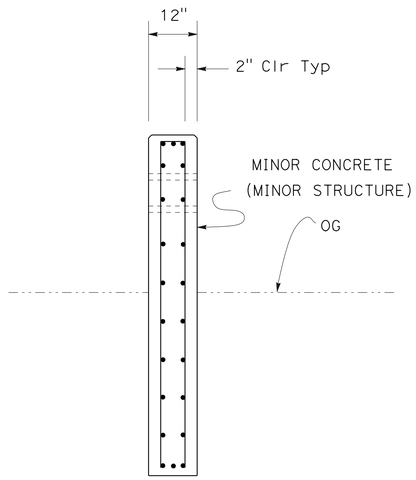

VIEW K-K

CONCRETE END BLOCK DETAIL

ROUTE 162 (But)

LOCATIONS : 149,154,175,180,181

CONSTRUCTION DETAILS

NO SCALE

C-72

STATE OF CALIFORNIA - DEPARTMENT OF TRANSPORTATION — Caltrans® TRAFFIC

FUNCTIONAL SUPERVISOR: STEPHEN WRIGHT

CALCULATED-DESIGNED BY: AL G. CHIN

CHECKED BY: ERIC SOUZA

REVISED BY | DATE REVISED

LAST REVISION 00-00-00 | DATE PLOTTED => 29-MAY-2014 | TIME PLOTTED => 08:44

Dist	COUNTY	ROUTE	POST MILES TOTAL PROJECT	SHEET No.	TOTAL SHEETS
03	But,Col,Gln Sut,Yol,Yub	16,32,45 70,113,162	Var	90	195

REGISTERED CIVIL ENGINEER — DATE 2-10-14

PLANS APPROVAL DATE 2-10-14

REGISTERED PROFESSIONAL ENGINEER — ERIC NORMAN SOUZA — No. 75706 — Exp. 06-30-14 — CIVIL — STATE OF CALIFORNIA

THE STATE OF CALIFORNIA OR ITS OFFICERS OR AGENTS SHALL NOT BE RESPONSIBLE FOR THE ACCURACY OR COMPLETENESS OF SCANNED COPIES OF THIS PLAN SHEET.

NOTE:

1. EXISTING UTILITY FACILITIES HAVE NOT BEEN PLOTTED ON THESE PLANS.

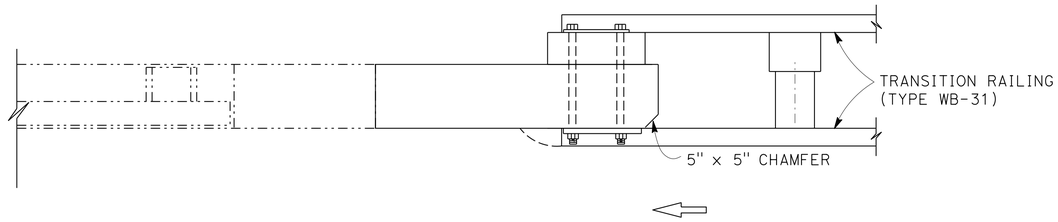

PLAN

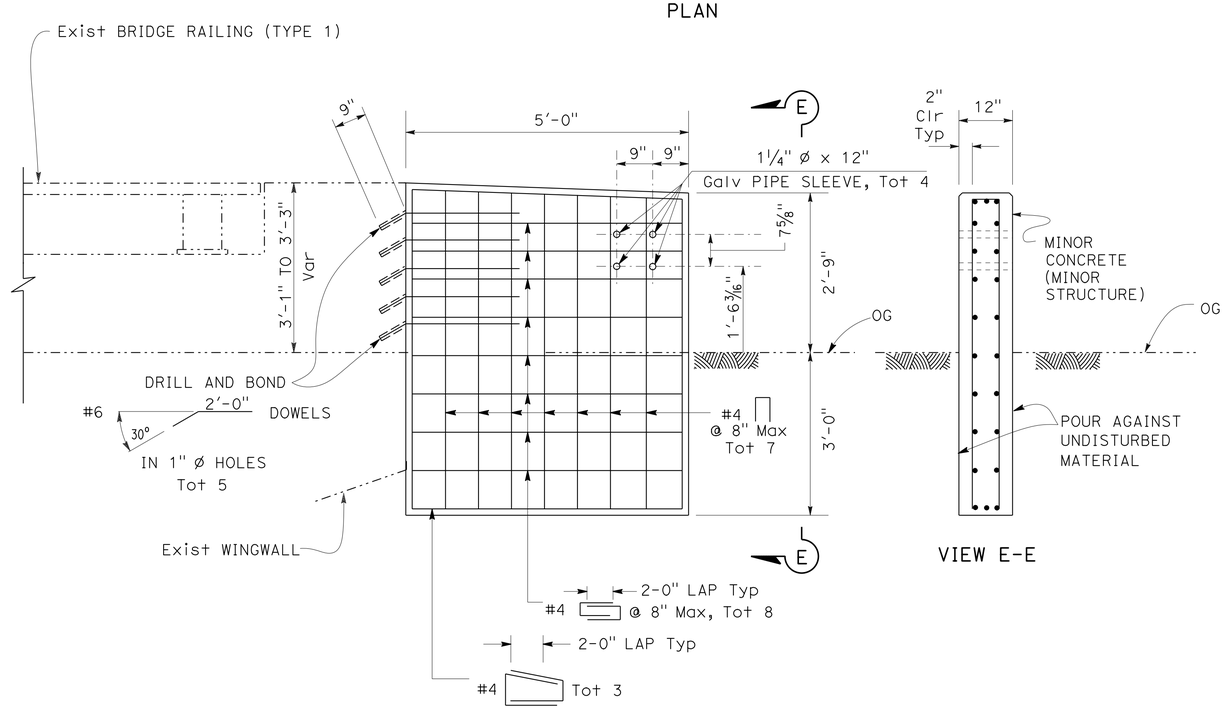

ELEVATION

CONCRETE END BLOCK DETAIL

ROUTE 162 (But)

LOCATIONS : 158,159,183,184

CONSTRUCTION DETAILS

NO SCALE

C-73

STATE OF CALIFORNIA - DEPARTMENT OF TRANSPORTATION — TRAFFIC

FUNCTIONAL SUPERVISOR: STEPHEN WRIGHT

CALCULATED-DESIGNED BY: AL G. CHIN

CHECKED BY: ERIC SOUZA

REVISED BY

DATE REVISED

LAST REVISION 00-00-00 — DATE PLOTTED => 29-MAY-2014 — TIME PLOTTED => 08:44

BORDER LAST REVISED 7/2/2010 | USERNAME => s130875 | DGN FILE => 0300020450ga073.dgn | RELATIVE BORDER SCALE IS IN INCHES 0 1 2 3 | UNIT 0399 | PROJECT NUMBER & PHASE 03000204501

Dist	COUNTY	ROUTE	POST MILES TOTAL PROJECT	SHEET No.	TOTAL SHEETS
03	But,Col,Gln Sut,Yol,Yub	16,32,45 70,113,162	Var	91	195

REGISTERED CIVIL ENGINEER — 2-10-14 DATE

ERIC NORMAN SOUZA No. 75706 Exp. 06-30-14 CIVIL — REGISTERED PROFESSIONAL ENGINEER — STATE OF CALIFORNIA

2-10-14
PLANS APPROVAL DATE

THE STATE OF CALIFORNIA OR ITS OFFICERS OR AGENTS SHALL NOT BE RESPONSIBLE FOR THE ACCURACY OR COMPLETENESS OF SCANNED COPIES OF THIS PLAN SHEET.

NOTE:

1. EXISTING UTILITY FACILITIES HAVE NOT BEEN PLOTTED ON THESE PLANS.

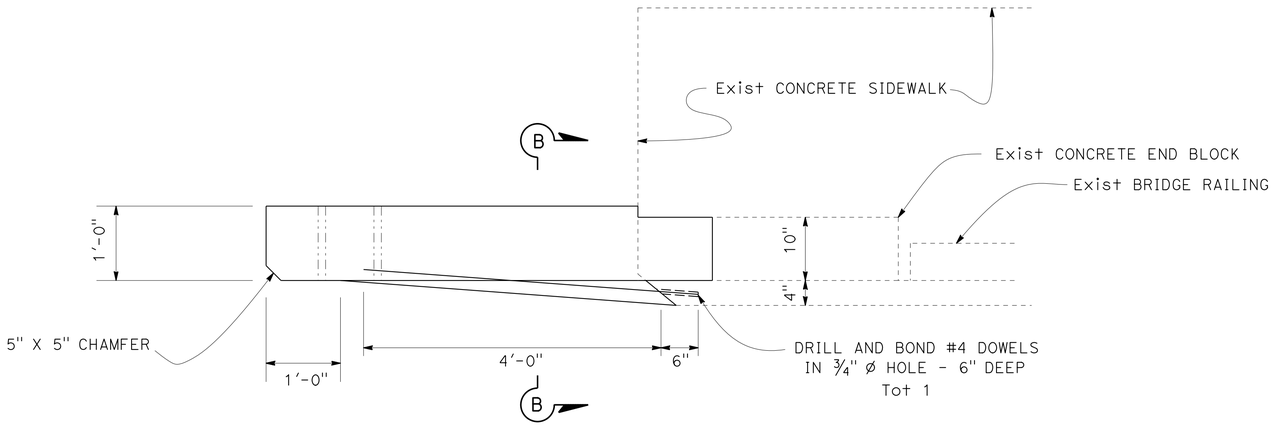

PLAN

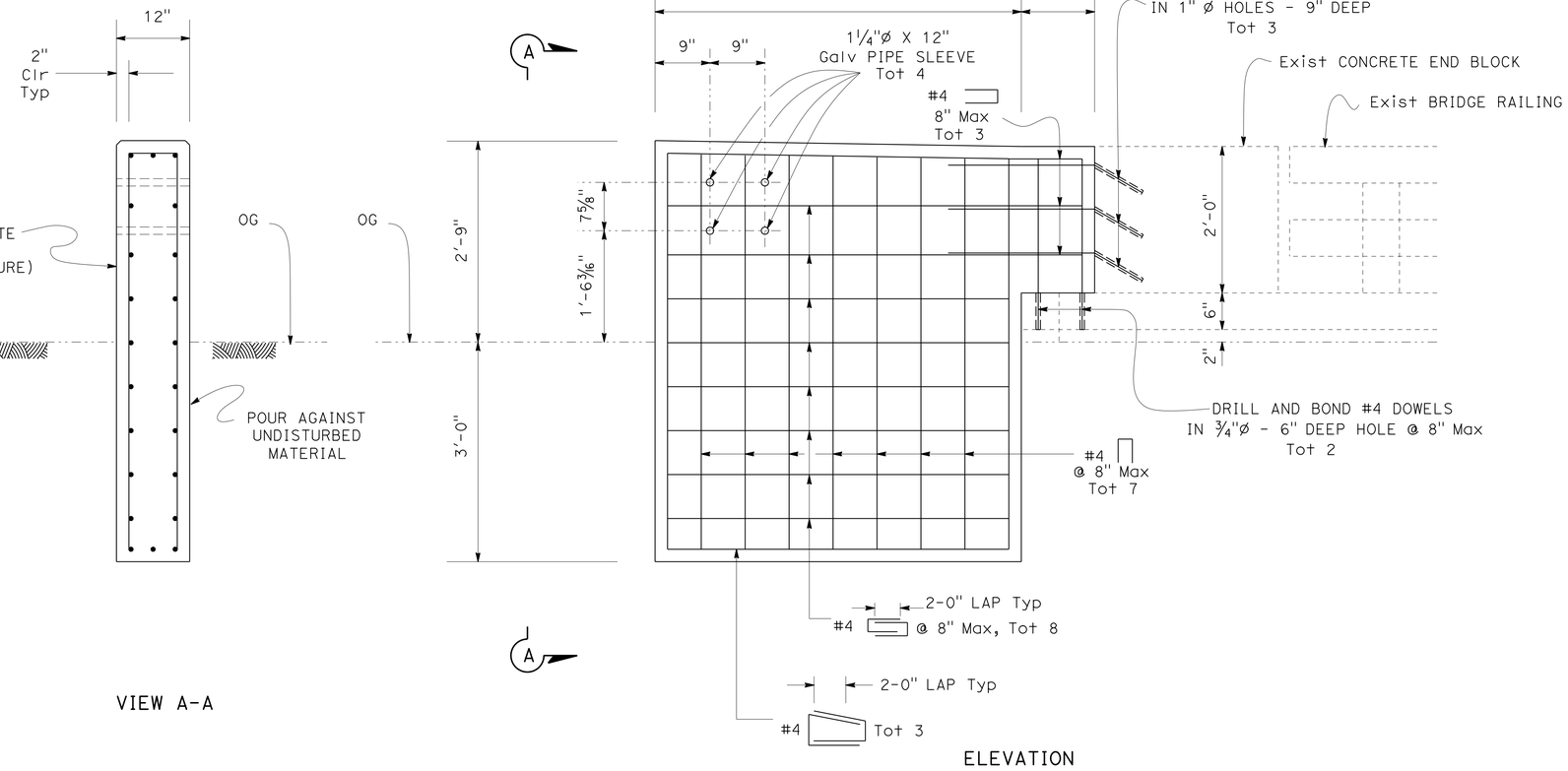

VIEW A-A

ELEVATION

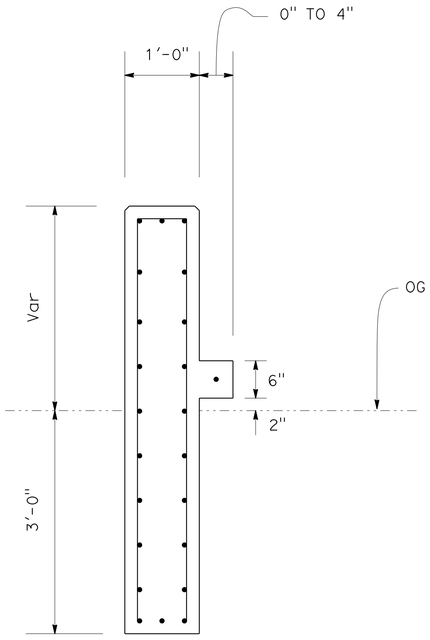

SECTION B-B

CONCRETE END BLOCK DETAIL

ROUTE 162 (But)

LOCATIONS : 166,190,191

CONSTRUCTION DETAILS

NO SCALE

C-74

STATE OF CALIFORNIA - DEPARTMENT OF TRANSPORTATION — Caltrans® TRAFFIC

FUNCTIONAL SUPERVISOR: STEPHEN WRIGHT

CALCULATED-DESIGNED BY: AL G. CHIN

CHECKED BY: ERIC SOUZA

REVISED BY | DATE REVISED

LAST REVISION 00-00-00 | DATE PLOTTED => 29-MAY-2014 | TIME PLOTTED => 08:44

BORDER LAST REVISED 7/2/2010 | USERNAME => s130875 | DGN FILE => 0300020450ga074.dgn | RELATIVE BORDER SCALE IS IN INCHES 0 1 2 3 | UNIT 0399 | PROJECT NUMBER & PHASE 03000204501

Dist	COUNTY	ROUTE	POST MILES TOTAL PROJECT	SHEET No.	TOTAL SHEETS
03	But,Col,Gln Sut,Yol,Yub	16,32,45 70,113,162	Var	92	195

REGISTERED CIVIL ENGINEER — DATE 2-10-14

PLANS APPROVAL DATE 2-10-14

REGISTERED PROFESSIONAL ENGINEER — ERIC NORMAN SOUZA No. 75706 Exp. 06-30-14 CIVIL — STATE OF CALIFORNIA

THE STATE OF CALIFORNIA OR ITS OFFICERS OR AGENTS SHALL NOT BE RESPONSIBLE FOR THE ACCURACY OR COMPLETENESS OF SCANNED COPIES OF THIS PLAN SHEET.

NOTE:

1. EXISTING UTILITY FACILITIES HAVE NOT BEEN PLOTTED ON THESE PLANS.

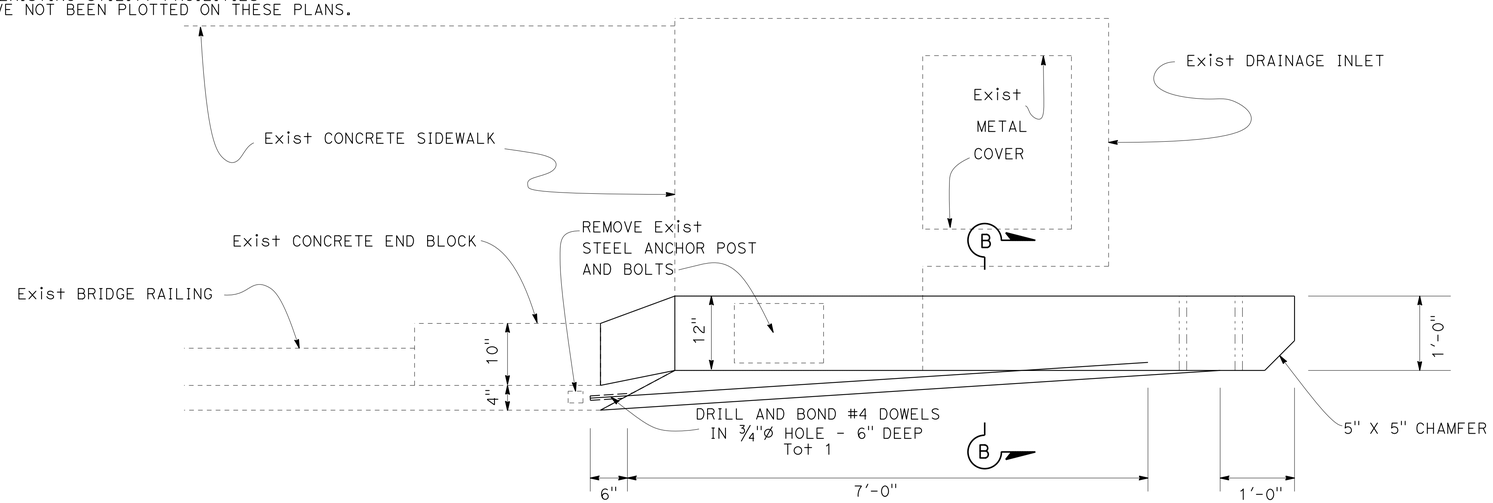

PLAN

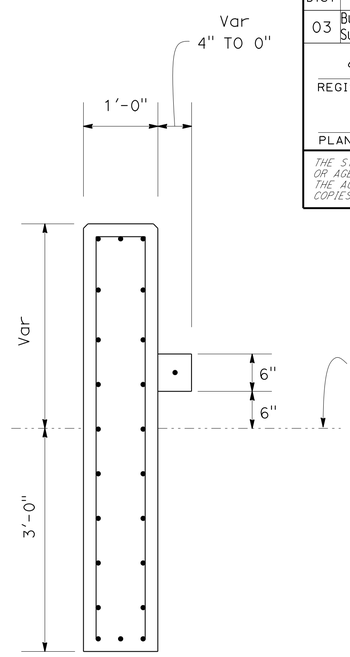

VIEW B-B

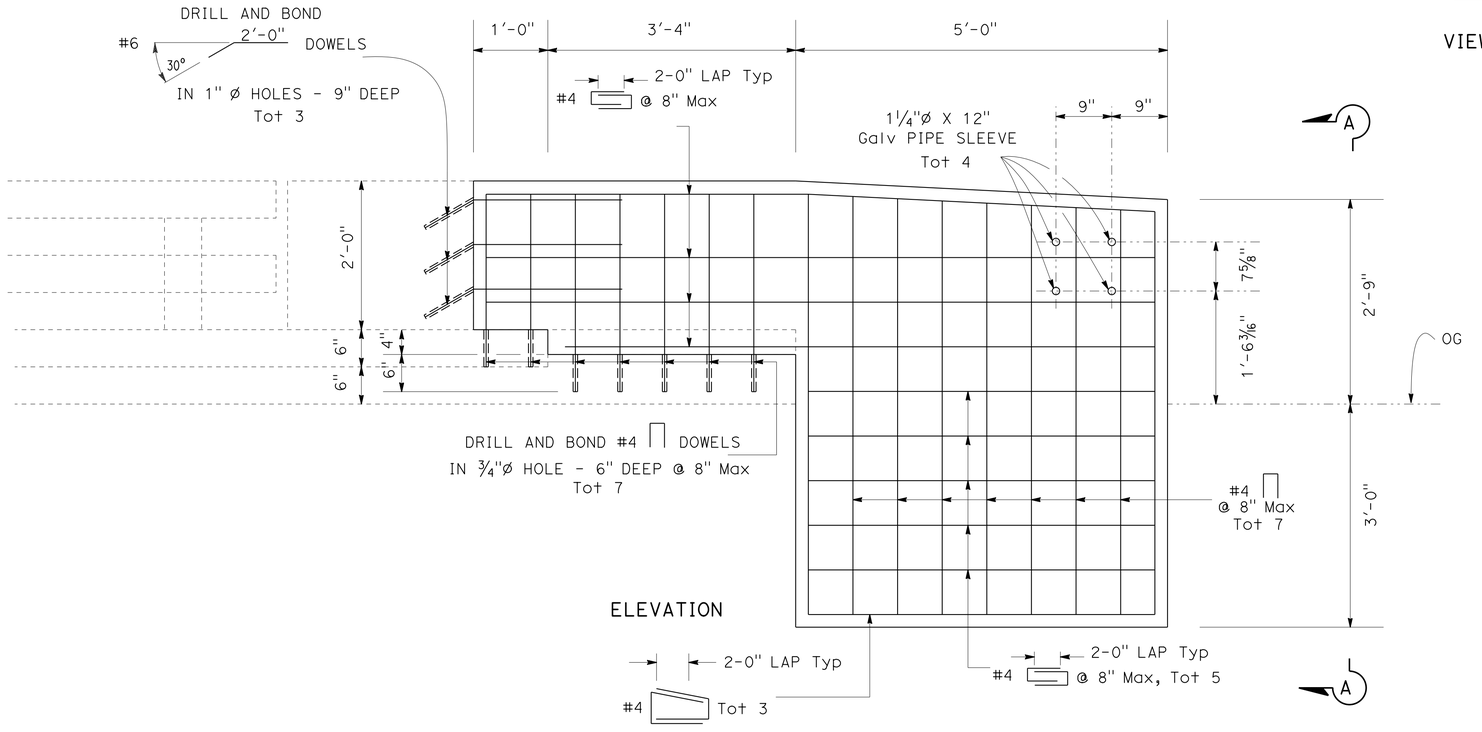

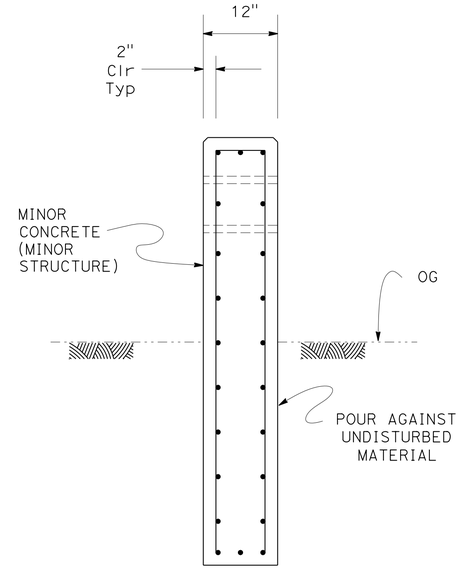

VIEW A-A

CONCRETE END BLOCK DETAIL

ROUTE 162 (But)

LOCATIONS : 165

CONSTRUCTION DETAILS

NO SCALE

C-75

STATE OF CALIFORNIA - DEPARTMENT OF TRANSPORTATION — TRAFFIC

FUNCTIONAL SUPERVISOR: STEPHEN WRIGHT

CALCULATED-DESIGNED BY | CHECKED BY: AL G. CHIN | ERIC SOUZA

REVISED BY | DATE REVISED

LAST REVISION 00-00-00 — DATE PLOTTED => 29-MAY-2014 — TIME PLOTTED => 08:44

BORDER LAST REVISED 7/2/2010

USERNAME => s130875
DGN FILE => 0300020450ga075.dgn

RELATIVE BORDER SCALE IS IN INCHES 0 1 2 3

UNIT 0399

PROJECT NUMBER & PHASE 03000204501

Dist	COUNTY	ROUTE	POST MILES TOTAL PROJECT	SHEET No.	TOTAL SHEETS
03	But,Col,Gln Sut,Yol,Yub	16,32,45 70,113,162	Var	93	195

REGISTERED CIVIL ENGINEER — 2-10-14 DATE

2-10-14
PLANS APPROVAL DATE

REGISTERED PROFESSIONAL ENGINEER
ERIC NORMAN SOUZA
No. 75706
Exp. 06-30-14
CIVIL
STATE OF CALIFORNIA

THE STATE OF CALIFORNIA OR ITS OFFICERS OR AGENTS SHALL NOT BE RESPONSIBLE FOR THE ACCURACY OR COMPLETENESS OF SCANNED COPIES OF THIS PLAN SHEET.

NOTE:

1. EXISTING UTILITY FACILITIES HAVE NOT BEEN PLOTTED ON THESE PLANS.

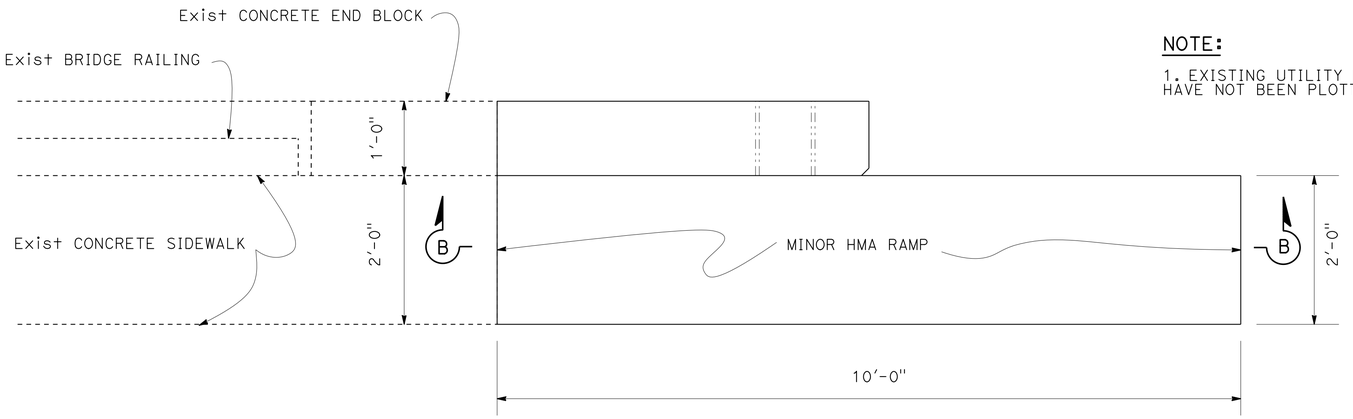

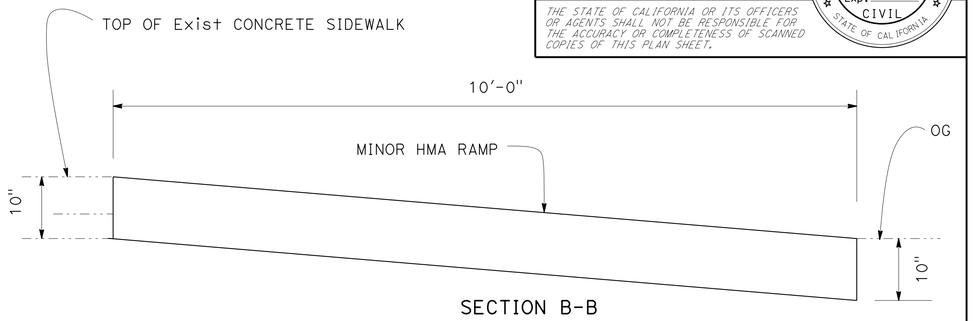

SECTION B-B

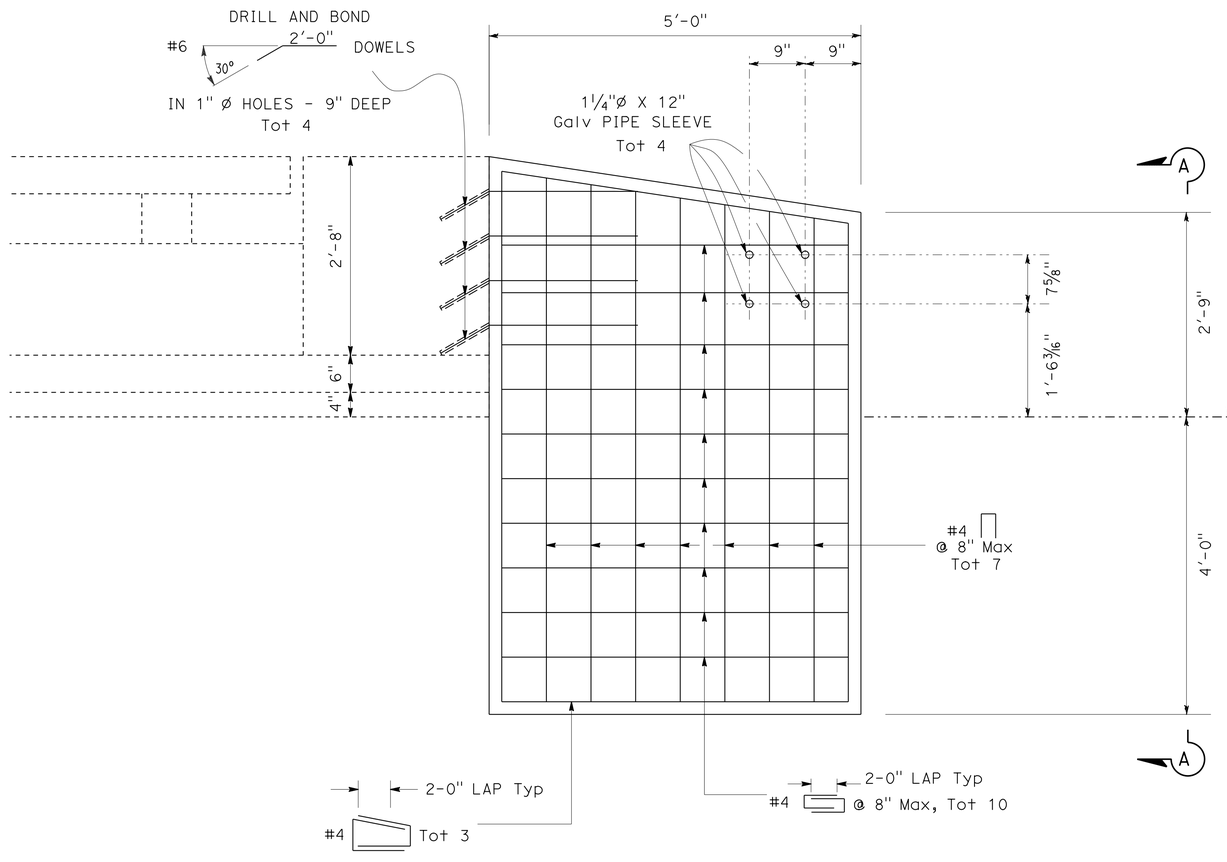

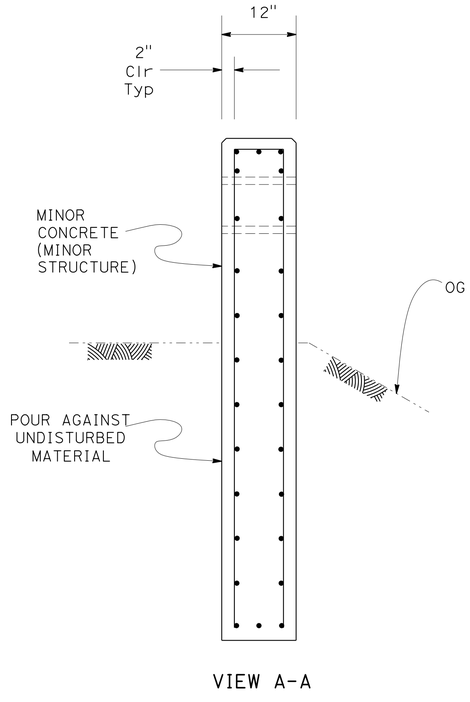

VIEW A-A

CONCRETE END BLOCK AND MINOR HMA RAMP DETAIL

ROUTE 162 (But)

LOCATIONS : 169,170,202,203

CONSTRUCTION DETAILS

NO SCALE

C-76

STATE OF CALIFORNIA - DEPARTMENT OF TRANSPORTATION
Caltrans®
TRAFFIC

FUNCTIONAL SUPERVISOR: STEPHEN WRIGHT

CALCULATED-DESIGNED BY: AL G. CHIN
CHECKED BY: ERIC SOUZA

REVISED BY	DATE REVISED

LAST REVISION 00-00-00
DATE PLOTTED => 29-MAY-2014
TIME PLOTTED => 08:44

BORDER LAST REVISED 7/2/2010

USERNAME => s130875
DGN FILE => 0300020450ga076.dgn

RELATIVE BORDER SCALE IS IN INCHES 0 1 2 3

UNIT 0399

PROJECT NUMBER & PHASE 03000204501

NOTE:

1. EXISTING UTILITY FACILITIES HAVE NOT BEEN PLOTTED ON THESE PLANS.

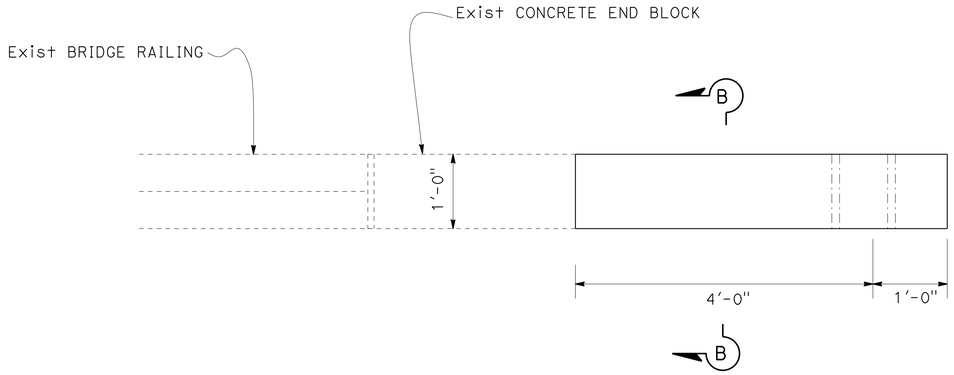

PLAN

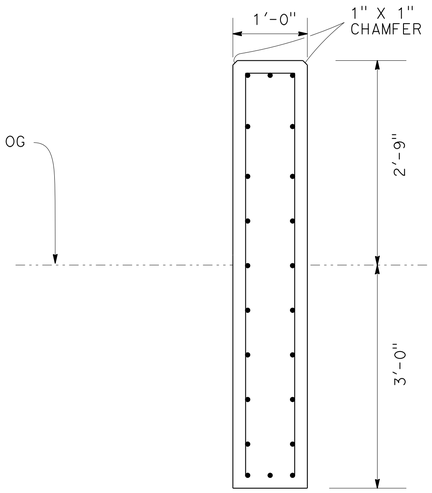

SECTION B-B

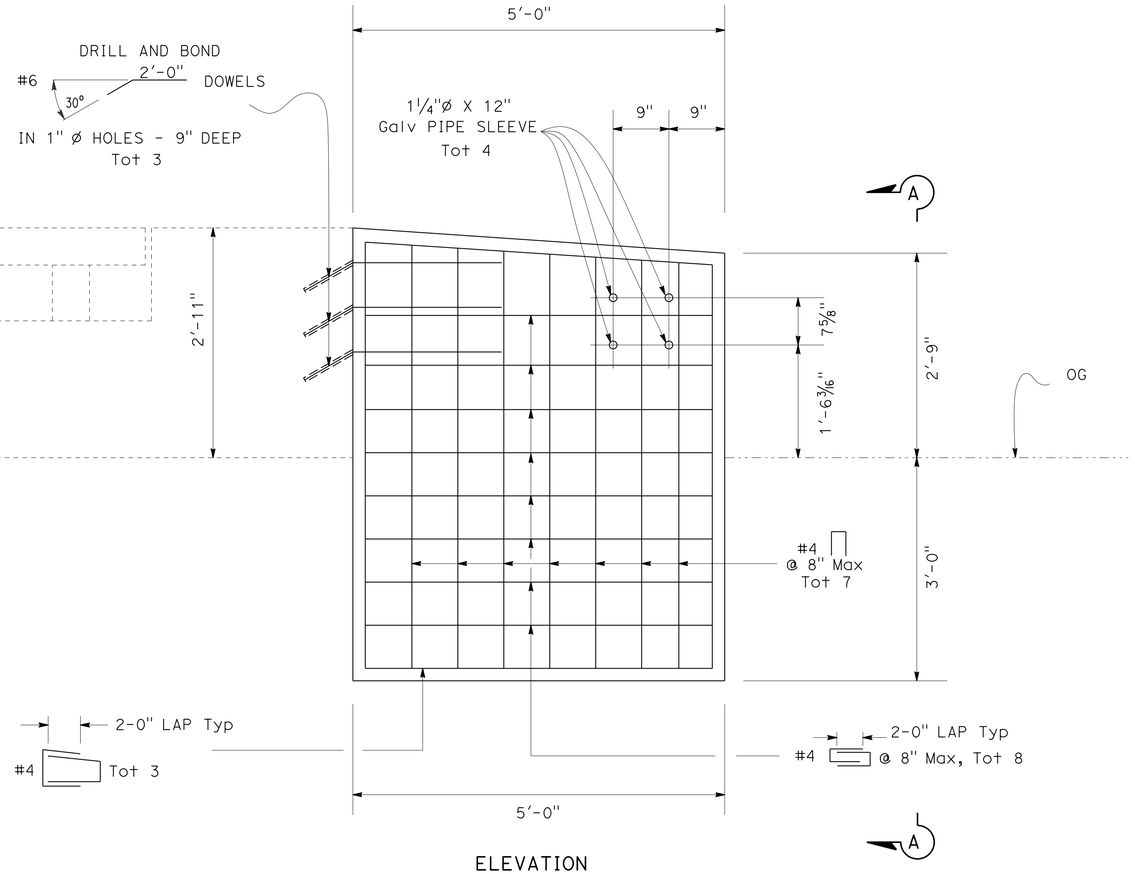

ELEVATION

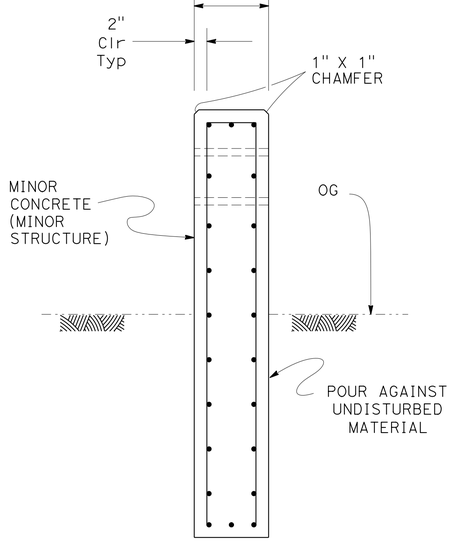

SECTION A-A

CONCRETE END BLOCK DETAILS

VARIOUS ROUTES

LOCATIONS : 243, 244

CONSTRUCTION DETAILS

NO SCALE

C-77

Dist	COUNTY	ROUTE	POST MILES TOTAL PROJECT	SHEET No.	TOTAL SHEETS
03	But,Col,Gln Sut,Yol,Yub	16,32,45 70,113,162	Var	94	195

Raimund Yambao 2-10-14
REGISTERED CIVIL ENGINEER DATE

2-10-14
PLANS APPROVAL DATE

REGISTERED PROFESSIONAL ENGINEER
RAIMUND J. YAMBAO
No. 80379
Exp. 03-31-15
CIVIL
STATE OF CALIFORNIA

THE STATE OF CALIFORNIA OR ITS OFFICERS OR AGENTS SHALL NOT BE RESPONSIBLE FOR THE ACCURACY OR COMPLETENESS OF SCANNED COPIES OF THIS PLAN SHEET.

CALCULATED-DESIGNED BY: GARY DEKENS
CHECKED BY: RAIMUND YAMBAO
FUNCTIONAL SUPERVISOR: DEANN SPANGLER
STATE OF CALIFORNIA - DEPARTMENT OF TRANSPORTATION
Caltrans® DESIGN

REVISED BY | DATE REVISED

LAST REVISION 01-23-14
DATE PLOTTED => 29-MAY-2014
TIME PLOTTED => 08:44

BORDER LAST REVISED 7/2/2010 | USERNAME => s130875 | DGN FILE => 0300020450ga077.dgn | RELATIVE BORDER SCALE IS IN INCHES 0 1 2 3 | UNIT 0327 | PROJECT NUMBER & PHASE 03000204501

NOTE:

1. EXISTING UTILITY FACILITIES HAVE NOT BEEN PLOTTED ON THESE PLANS.

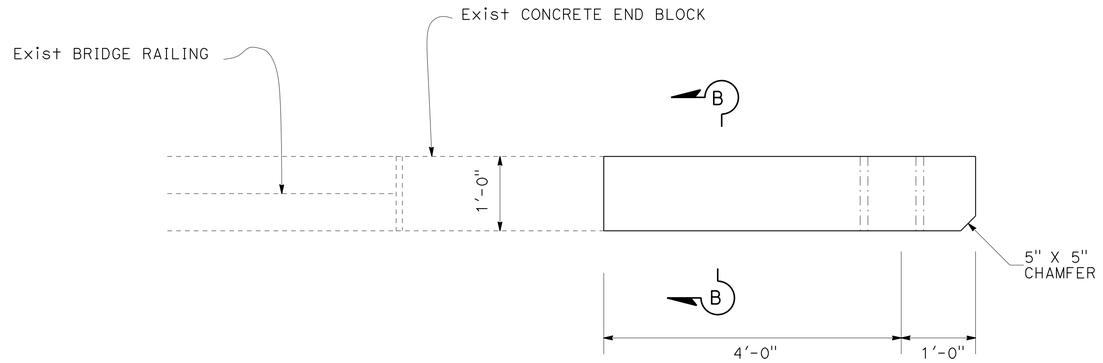

PLAN

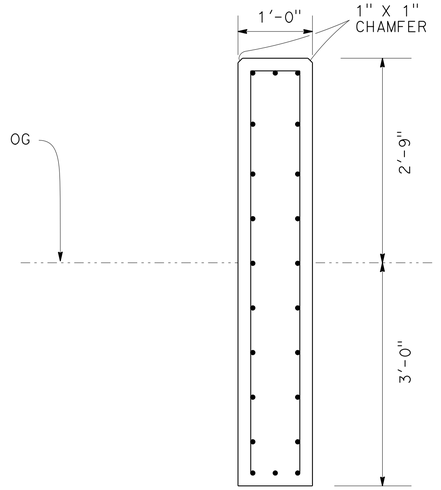

SECTION B-B

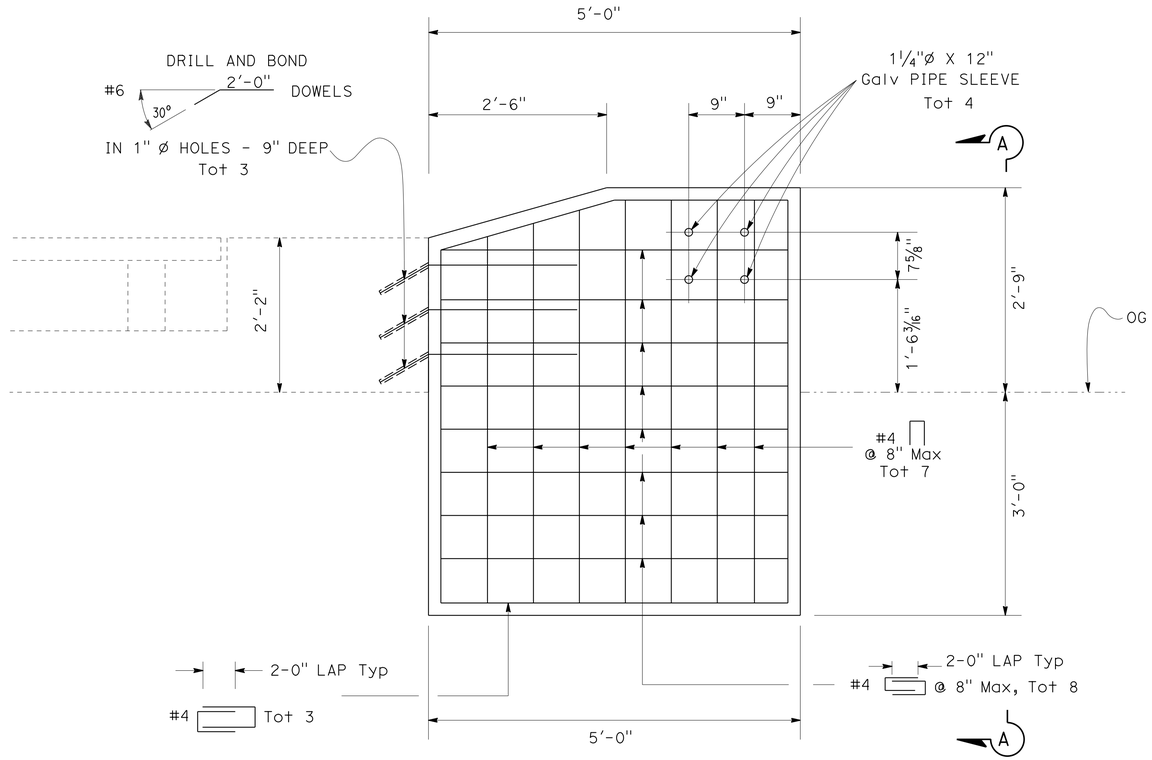

ELEVATION

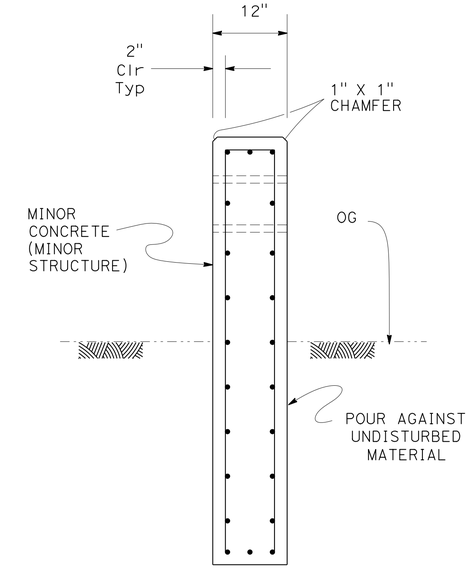

SECTION A-A

CONCRETE END BLOCK DETAILS

VARIOUS ROUTES

LOCATIONS : 245, 246, 251, 252, 262, 263, 272, 273, 368, 369

CONSTRUCTION DETAILS

NO SCALE

C-78

Dist	COUNTY	ROUTE	POST MILES TOTAL PROJECT	SHEET No.	TOTAL SHEETS
03	But,Col,Gln Sut,Yol,Yub	16,32,45 70,113,162	Var	95	195

Raimund Yambao 2-10-14
REGISTERED CIVIL ENGINEER DATE

2-10-14
PLANS APPROVAL DATE

REGISTERED PROFESSIONAL ENGINEER — RAIMUND J. YAMBAO No. 80379 Exp. 03-31-15 CIVIL — STATE OF CALIFORNIA

THE STATE OF CALIFORNIA OR ITS OFFICERS OR AGENTS SHALL NOT BE RESPONSIBLE FOR THE ACCURACY OR COMPLETENESS OF SCANNED COPIES OF THIS PLAN SHEET.

CALCULATED-DESIGNED BY: GARY DEKENS
CHECKED BY: RAIMUND YAMBAO
REVISED BY
DATE REVISED
FUNCTIONAL SUPERVISOR: DEANN SPANGLER
STATE OF CALIFORNIA - DEPARTMENT OF TRANSPORTATION
Caltrans® DESIGN

LAST REVISION 01-23-14
DATE PLOTTED => 29-MAY-2014
TIME PLOTTED => 08:44

NOTE:

1. EXISTING UTILITY FACILITIES HAVE NOT BEEN PLOTTED ON THESE PLANS.

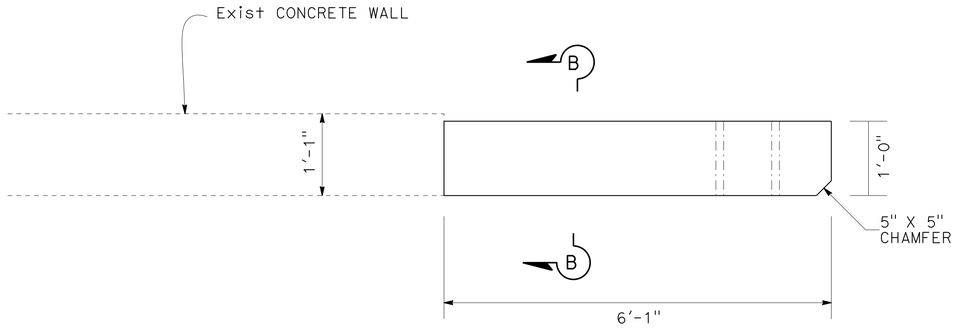

PLAN

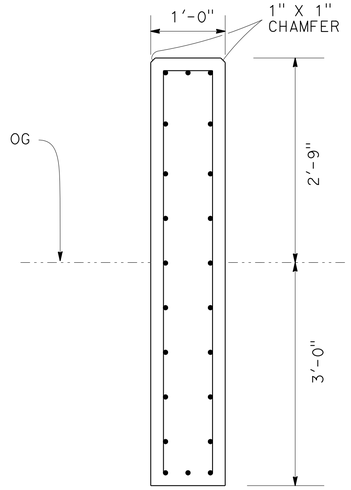

SECTION B-B

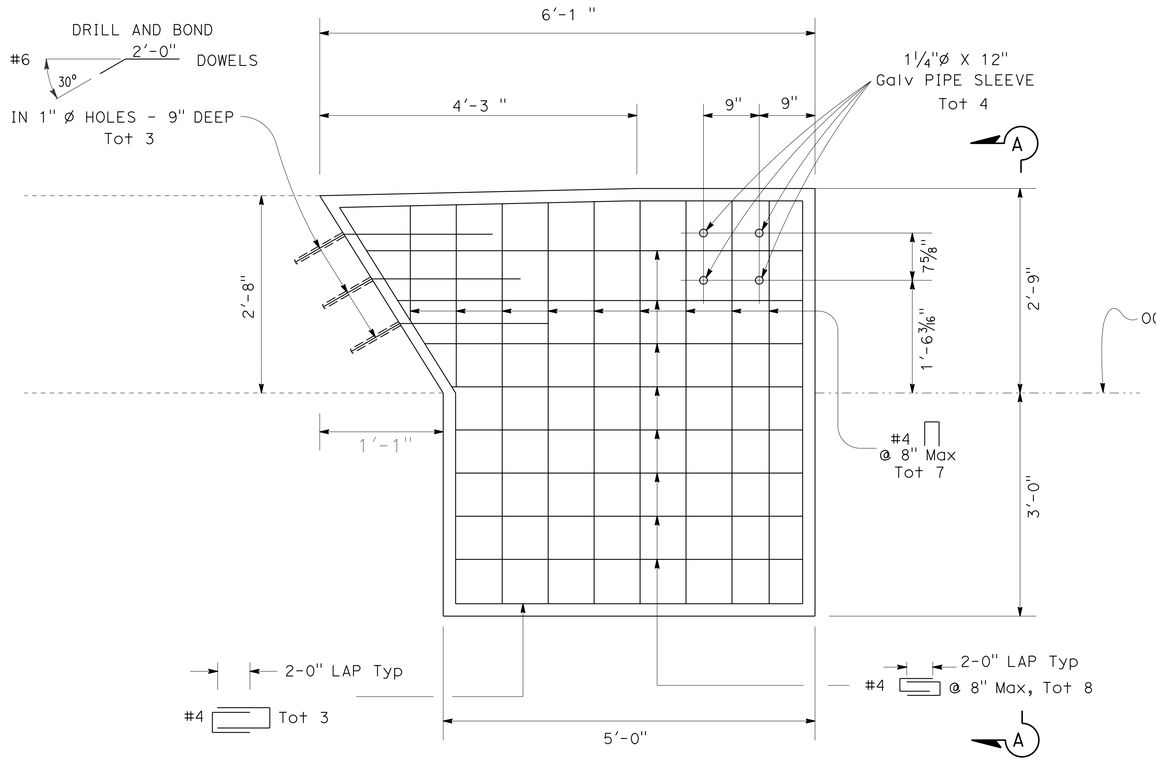

ELEVATION

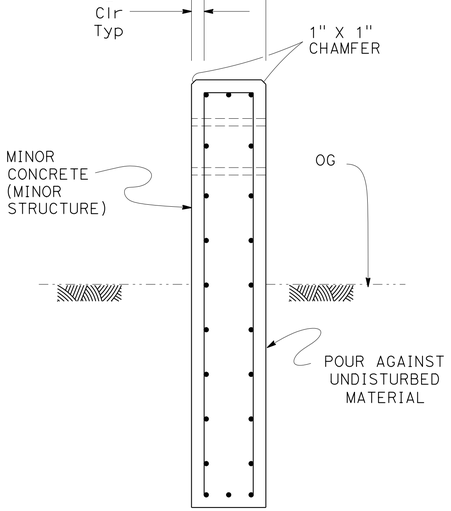

SECTION A-A

CONCRETE END BLOCK DETAILS

VARIOUS ROUTES

LOCATIONS : 247, 248, 253, 254, 278, 333, 384, 385

CONSTRUCTION DETAILS

NO SCALE

C-79

Dist	COUNTY	ROUTE	POST MILES TOTAL PROJECT	SHEET No.	TOTAL SHEETS
03	But,Col,Gln Sut,Yol,Yub	16,32,45 70,113,162	Var	96	195

Raimund Yambao 2-10-14
REGISTERED CIVIL ENGINEER DATE

2-10-14
PLANS APPROVAL DATE

REGISTERED PROFESSIONAL ENGINEER
RAIMUND J. YAMBAO
No. 80379
Exp. 03-31-15
CIVIL
STATE OF CALIFORNIA

THE STATE OF CALIFORNIA OR ITS OFFICERS OR AGENTS SHALL NOT BE RESPONSIBLE FOR THE ACCURACY OR COMPLETENESS OF SCANNED COPIES OF THIS PLAN SHEET.

CALCULATED-DESIGNED BY: GARY DEKENS
CHECKED BY: RAIMUND YAMBAO
REVISED BY
DATE REVISED
FUNCTIONAL SUPERVISOR: DEANN SPANGLER
STATE OF CALIFORNIA - DEPARTMENT OF TRANSPORTATION
Caltrans® DESIGN

LAST REVISION 01-23-14
DATE PLOTTED => 29-MAY-2014
TIME PLOTTED => 08:44

Dist	COUNTY	ROUTE	POST MILES TOTAL PROJECT	SHEET No.	TOTAL SHEETS
03	But,Col,Gln Sut,Yol,Yub	16,32,45 70,113,162	Var	97	195

Raimund Yambao 2-10-14
REGISTERED CIVIL ENGINEER DATE

2-10-14
PLANS APPROVAL DATE

REGISTERED PROFESSIONAL ENGINEER — RAIMUND J. YAMBAO No. 80379 Exp. 03-31-15 CIVIL — STATE OF CALIFORNIA

THE STATE OF CALIFORNIA OR ITS OFFICERS OR AGENTS SHALL NOT BE RESPONSIBLE FOR THE ACCURACY OR COMPLETENESS OF SCANNED COPIES OF THIS PLAN SHEET.

NOTE:

1. EXISTING UTILITY FACILITIES HAVE NOT BEEN PLOTTED ON THESE PLANS.

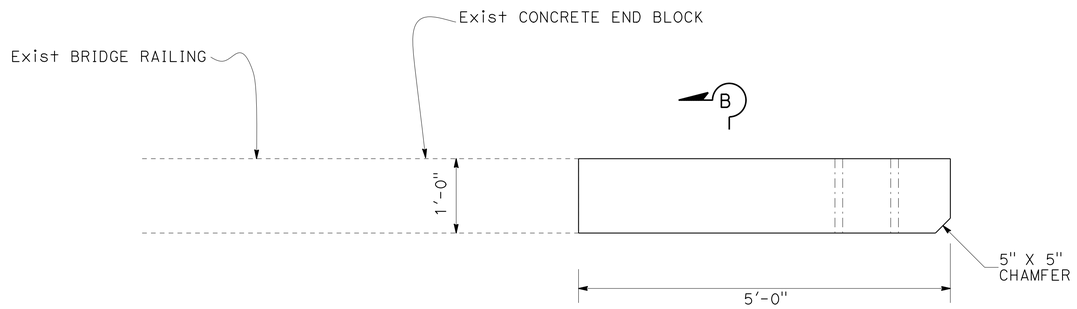

PLAN

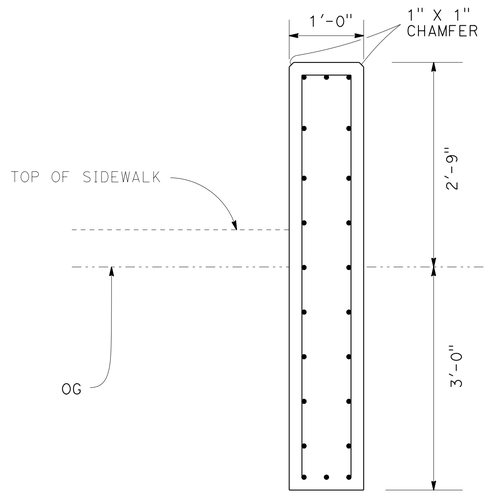

SECTION B-B

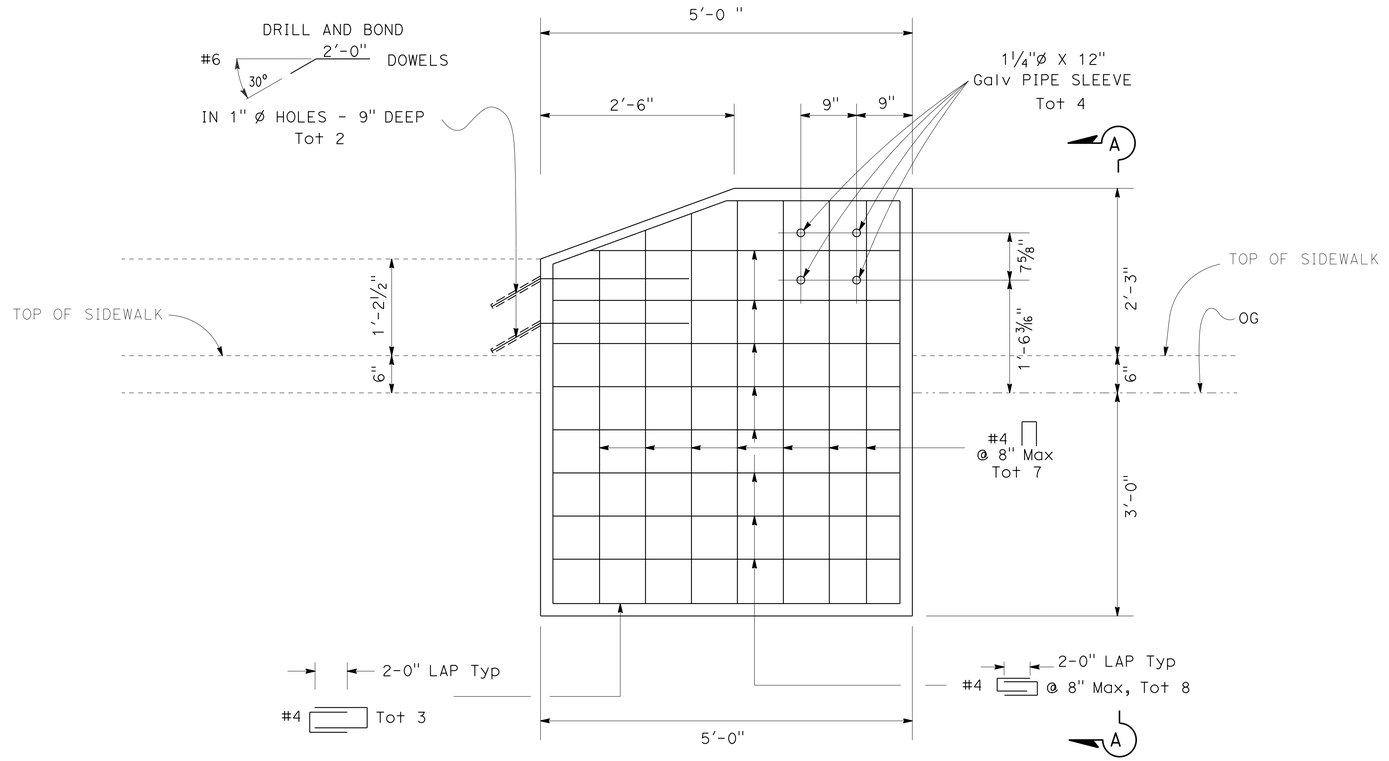

ELEVATION

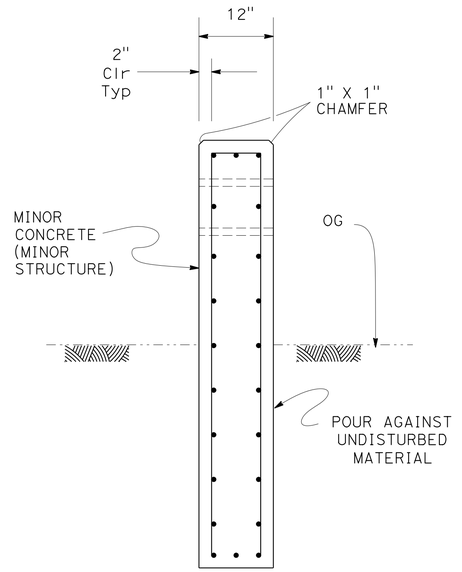

SECTION A-A

CONCRETE END BLOCK DETAILS

ROUTE 32 (Gle)

LOCATIONS : 249, 255

CONSTRUCTION DETAILS

NO SCALE

C-80

LAST REVISION 01-23-14 | DATE PLOTTED => 29-MAY-2014 | TIME PLOTTED => 08:44

STATE OF CALIFORNIA - DEPARTMENT OF TRANSPORTATION
DESIGN
Caltrans®

FUNCTIONAL SUPERVISOR: DEANN SPANGLER

CALCULATED-DESIGNED BY: RAIMUND YAMBAO

CHECKED BY: GARY DEKENS

REVISED BY	DATE REVISED

BORDER LAST REVISED 7/2/2010

USERNAME => s130875
DGN FILE => 0300020450ga080.dgn

RELATIVE BORDER SCALE IS IN INCHES 0 1 2 3

UNIT 0327

PROJECT NUMBER & PHASE 03000204501

Dist	COUNTY	ROUTE	POST MILES TOTAL PROJECT	SHEET No.	TOTAL SHEETS
03	But,Col,Gln Sut,Yol,Yub	16,32,45 70,113,162	Var	98	195

Raimund Yambao 2-10-14
REGISTERED CIVIL ENGINEER DATE

2-10-14
PLANS APPROVAL DATE

REGISTERED PROFESSIONAL ENGINEER
RAIMUND J. YAMBAO
No. 80379
Exp. 03-31-15
CIVIL
STATE OF CALIFORNIA

THE STATE OF CALIFORNIA OR ITS OFFICERS OR AGENTS SHALL NOT BE RESPONSIBLE FOR THE ACCURACY OR COMPLETENESS OF SCANNED COPIES OF THIS PLAN SHEET.

NOTE:

1. EXISTING UTILITY FACILITIES HAVE NOT BEEN PLOTTED ON THESE PLANS.

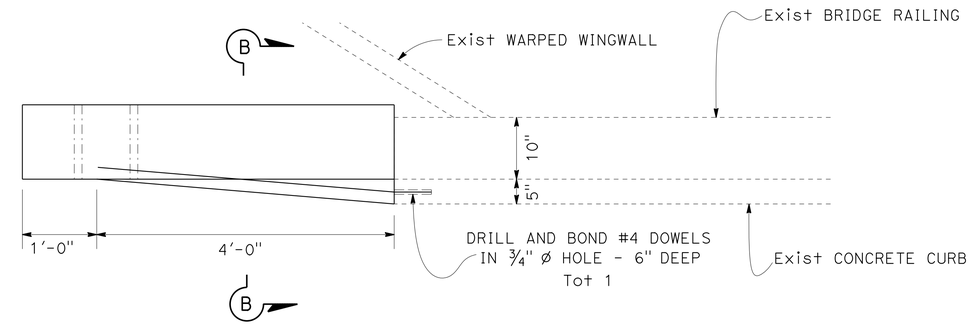

PLAN
LOCATIONS : 256

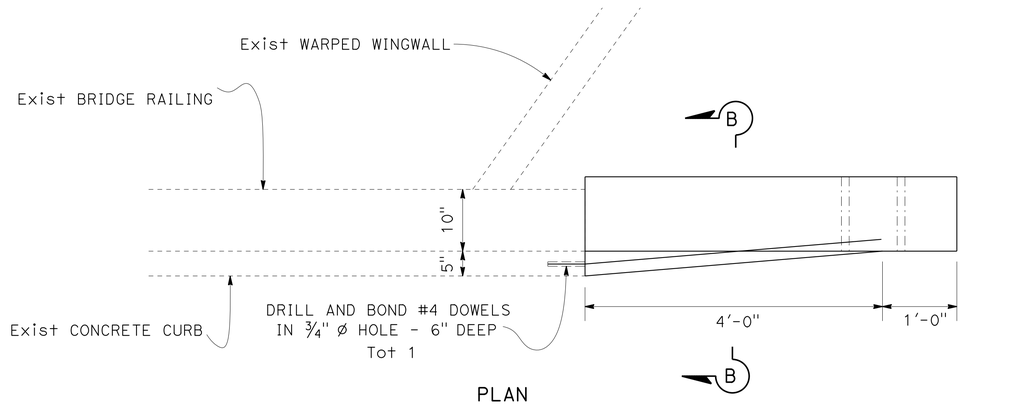

PLAN
LOCATIONS : 255

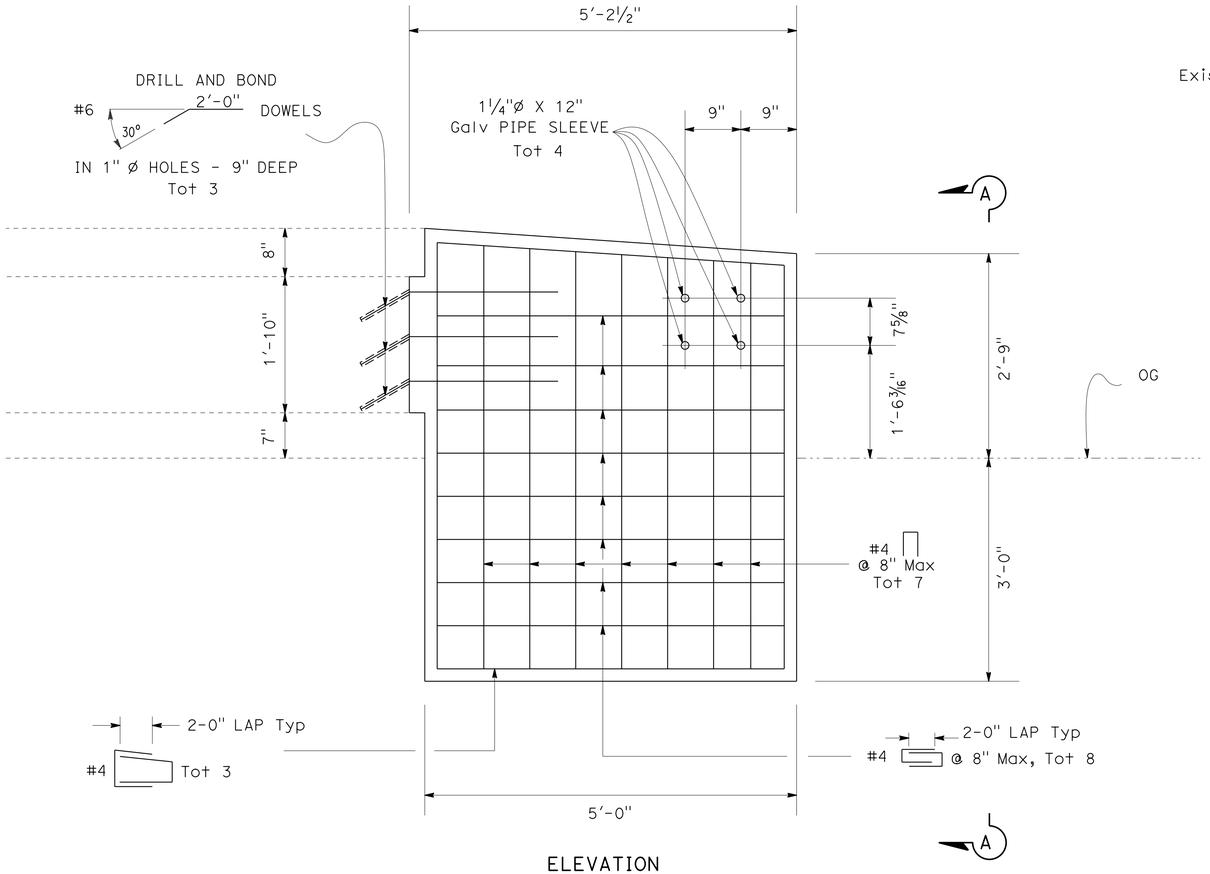

ELEVATION

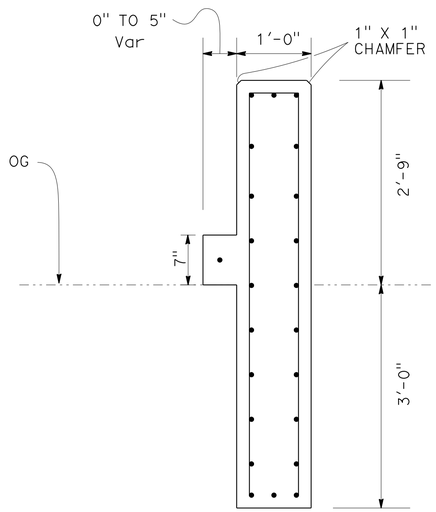

SECTION B-B

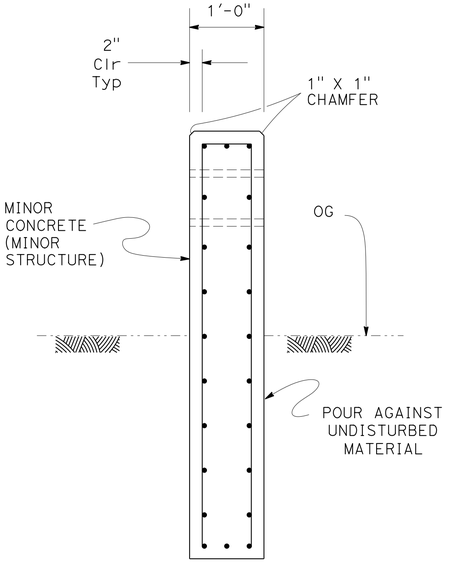

SECTION A-A

CONCRETE END BLOCK DETAILS

ROUTE 162 GLENN COUNTY
LOCATIONS : 292, 293

CONSTRUCTION DETAILS

NO SCALE

C-81

REVISED BY	DATE REVISED

CALCULATED-DESIGNED BY: GARY DEKENS
CHECKED BY: RAIMUND YAMBAO
FUNCTIONAL SUPERVISOR: DEANN SPANGLER
STATE OF CALIFORNIA - DEPARTMENT OF TRANSPORTATION
Caltrans®
DESIGN

LAST REVISION 01-23-14
DATE PLOTTED => 29-MAY-2014
TIME PLOTTED => 08:44

BORDER LAST REVISED 7/2/2010
USERNAME => s130875
DGN FILE => 0300020450ga081.dgn
RELATIVE BORDER SCALE IS IN INCHES 0 1 2 3
UNIT 0327
PROJECT NUMBER & PHASE 03000204501

NOTE:

1. EXISTING UTILITY FACILITIES HAVE NOT BEEN PLOTTED ON THESE PLANS.

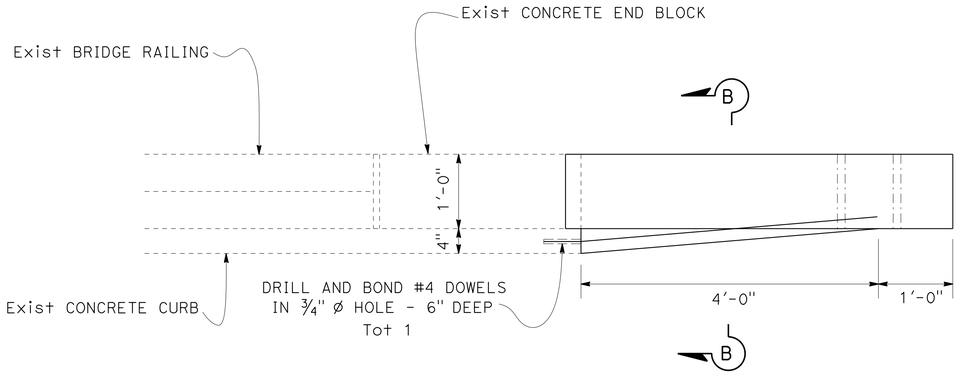

PLAN

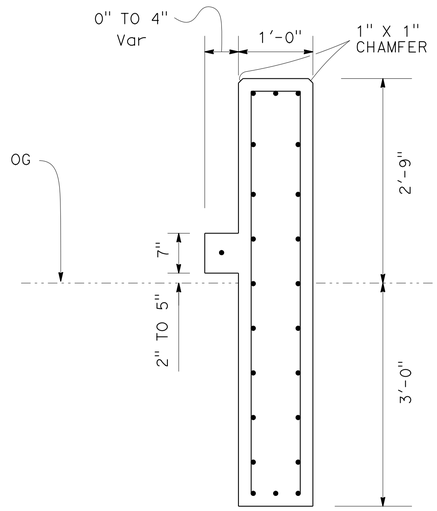

SECTION B-B

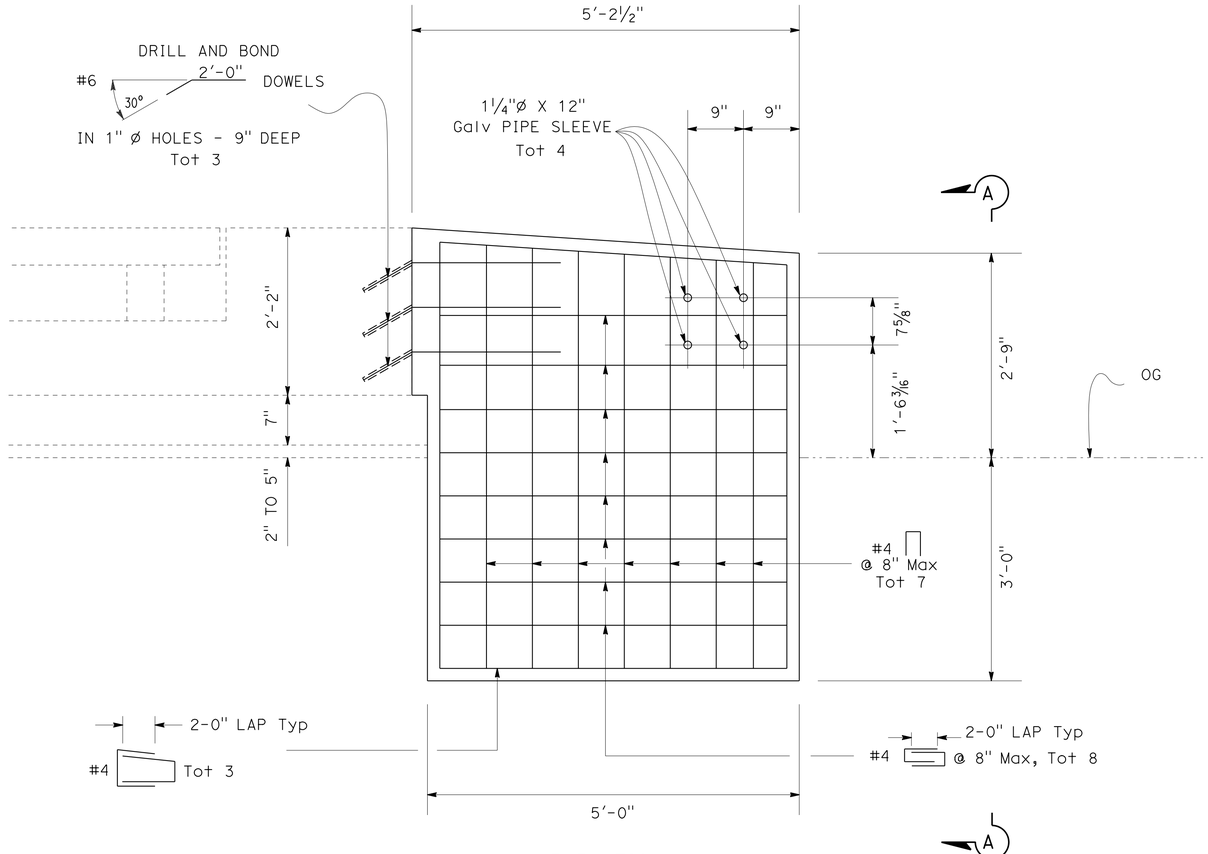

ELEVATION

SECTION A-A

CONCRETE END BLOCK DETAILS

VARIOUS ROUTES

LOCATIONS : 294, 295, 296, 297, 298, 300, 301, 303, 322, 323, 324, 325, 326, 350, 351, 352, 353, 354, 356, 357, 358, 359, 360, 378, 379, 380, 381, 382, 401, 402, 419, 420, 422, 423, 433, 434

CONSTRUCTION DETAILS

NO SCALE

C-82

Dist	COUNTY	ROUTE	POST MILES TOTAL PROJECT	SHEET No.	TOTAL SHEETS
03	But,Col,Gln Sut,Yol,Yub	16,32,45 70,113,162	Var	99	195

Raimund Yambao 2-10-14
REGISTERED CIVIL ENGINEER DATE

2-10-14
PLANS APPROVAL DATE

REGISTERED PROFESSIONAL ENGINEER
RAIMUND J. YAMBAO
No. 80379
Exp. 03-31-15
CIVIL
STATE OF CALIFORNIA

THE STATE OF CALIFORNIA OR ITS OFFICERS OR AGENTS SHALL NOT BE RESPONSIBLE FOR THE ACCURACY OR COMPLETENESS OF SCANNED COPIES OF THIS PLAN SHEET.

CALCULATED-DESIGNED BY
CHECKED BY
REVISED BY
DATE REVISED
GARY DEKENS
RAIMUND YAMBAO
FUNCTIONAL SUPERVISOR
DEANN SPANGLER
STATE OF CALIFORNIA - DEPARTMENT OF TRANSPORTATION
DESIGN

LAST REVISION 01-23-14
DATE PLOTTED => 29-MAY-2014
TIME PLOTTED => 08:44

Dist	COUNTY	ROUTE	POST MILES TOTAL PROJECT	SHEET No.	TOTAL SHEETS
03	But,Col,Gln Sut,Yol,Yub	16,32,45 70,113,162	Var	100	195

Raimund Yambao 2-10-14
REGISTERED CIVIL ENGINEER DATE

2-10-14
PLANS APPROVAL DATE

REGISTERED PROFESSIONAL ENGINEER
RAIMUND J. YAMBAO
No. 80379
Exp. 03-31-15
CIVIL
STATE OF CALIFORNIA

THE STATE OF CALIFORNIA OR ITS OFFICERS OR AGENTS SHALL NOT BE RESPONSIBLE FOR THE ACCURACY OR COMPLETENESS OF SCANNED COPIES OF THIS PLAN SHEET.

NOTE:

1. EXISTING UTILITY FACILITIES HAVE NOT BEEN PLOTTED ON THESE PLANS.

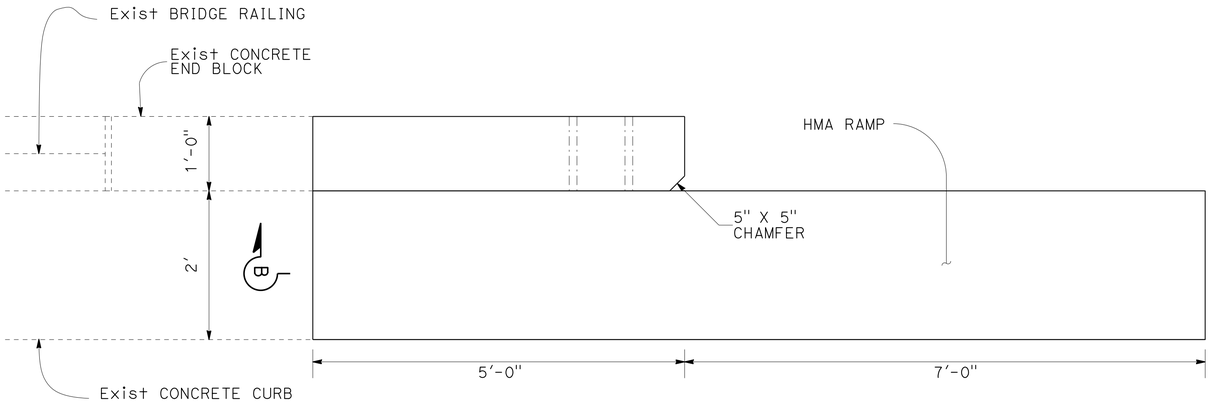

PLAN

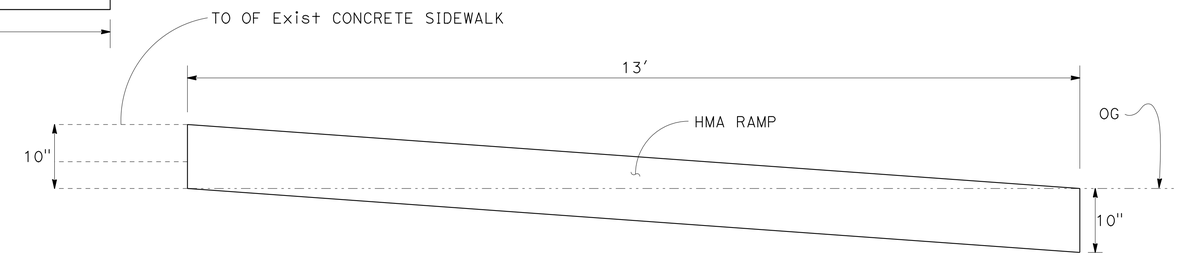

SECTION B-B

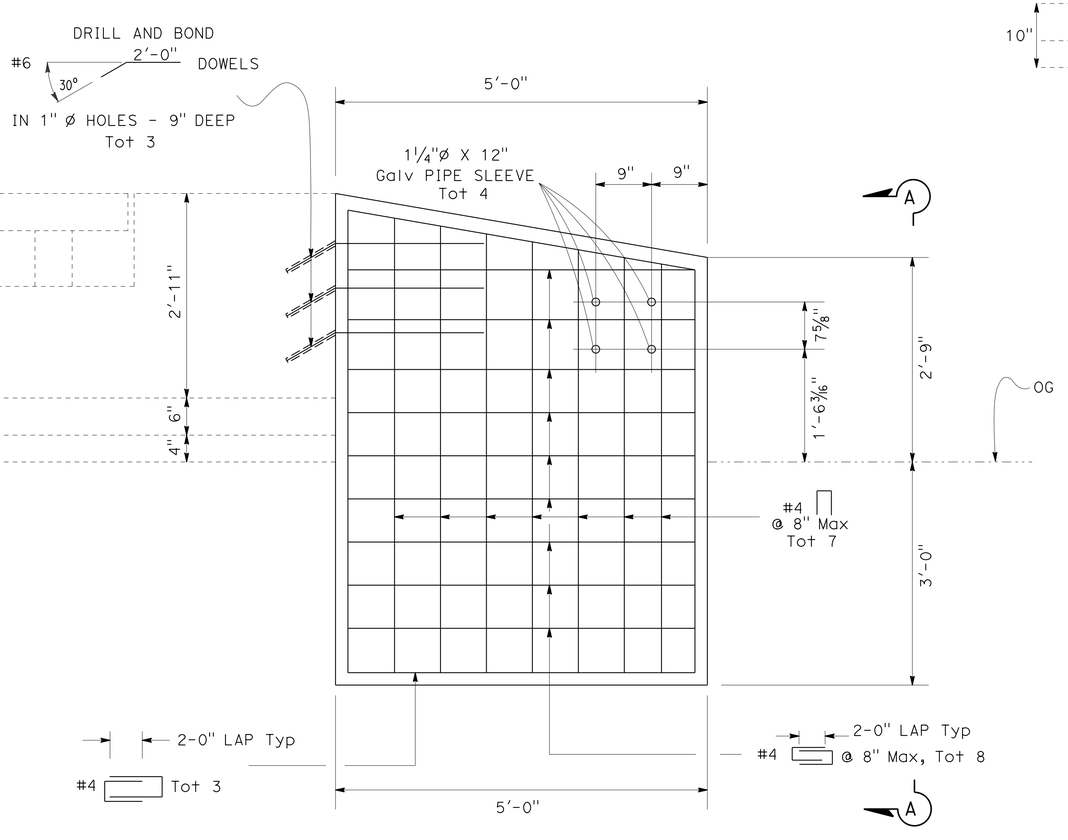

ELEVATION

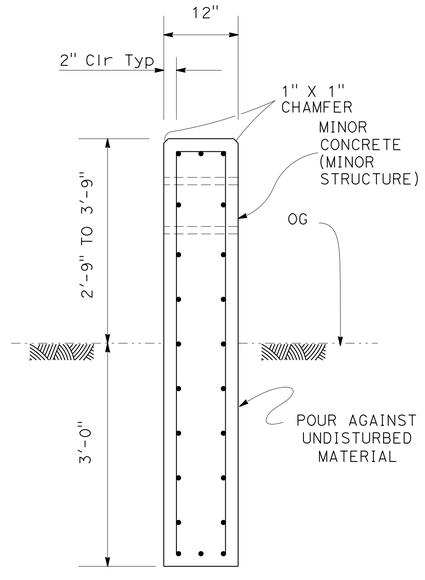

SECTION A-A

CONCRETE END BLOCK DETAILS

VARIOUS ROUTES
LOCATIONS : 304, 361

CONSTRUCTION DETAILS

NO SCALE

C-83

STATE OF CALIFORNIA - DEPARTMENT OF TRANSPORTATION
DESIGN
FUNCTIONAL SUPERVISOR: DEANN SPANGLER
CALCULATED-DESIGNED BY: GARY DEKENS
CHECKED BY: RAIMUND YAMBAO
REVISED BY
DATE REVISED

LAST REVISION 01-23-14 | DATE PLOTTED => 29-MAY-2014 | TIME PLOTTED => 08:44

BORDER LAST REVISED 7/2/2010 | USERNAME => s130875 | DGN FILE => 0300020450ga083.dgn | RELATIVE BORDER SCALE IS IN INCHES 0 1 2 3 | UNIT 0327 | PROJECT NUMBER & PHASE 03000204501

Dist	COUNTY	ROUTE	POST MILES TOTAL PROJECT	SHEET No.	TOTAL SHEETS
03	But,Col,Gln Sut,Yol,Yub	16,32,45 70,113,162	Var	101	195

Raimund Yambao 2-10-14
REGISTERED CIVIL ENGINEER DATE

2-10-14
PLANS APPROVAL DATE

REGISTERED PROFESSIONAL ENGINEER
RAIMUND J. YAMBAO
No. 80379
Exp. 03-31-15
CIVIL
STATE OF CALIFORNIA

THE STATE OF CALIFORNIA OR ITS OFFICERS OR AGENTS SHALL NOT BE RESPONSIBLE FOR THE ACCURACY OR COMPLETENESS OF SCANNED COPIES OF THIS PLAN SHEET.

NOTE:

1. EXISTING UTILITY FACILITIES HAVE NOT BEEN PLOTTED ON THESE PLANS.

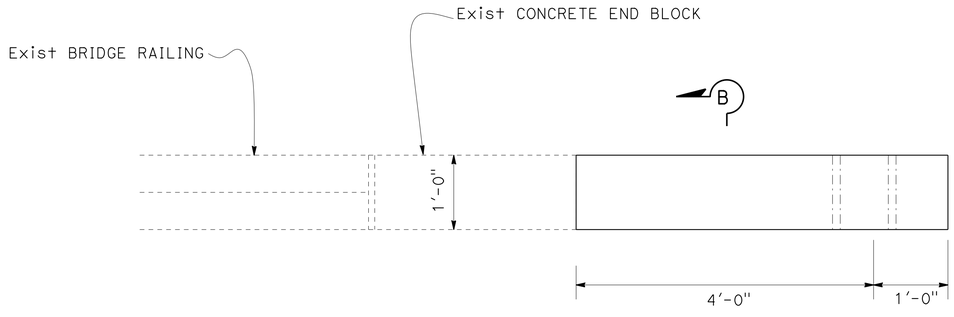

PLAN

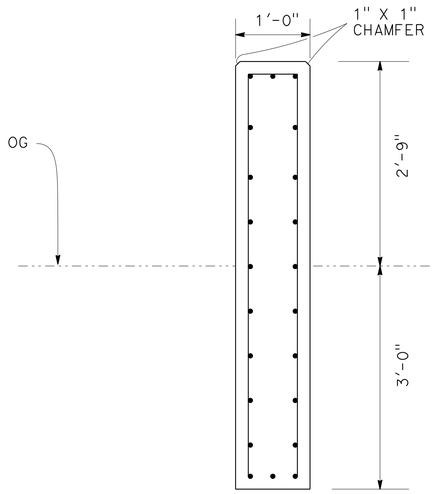

SECTION B-B

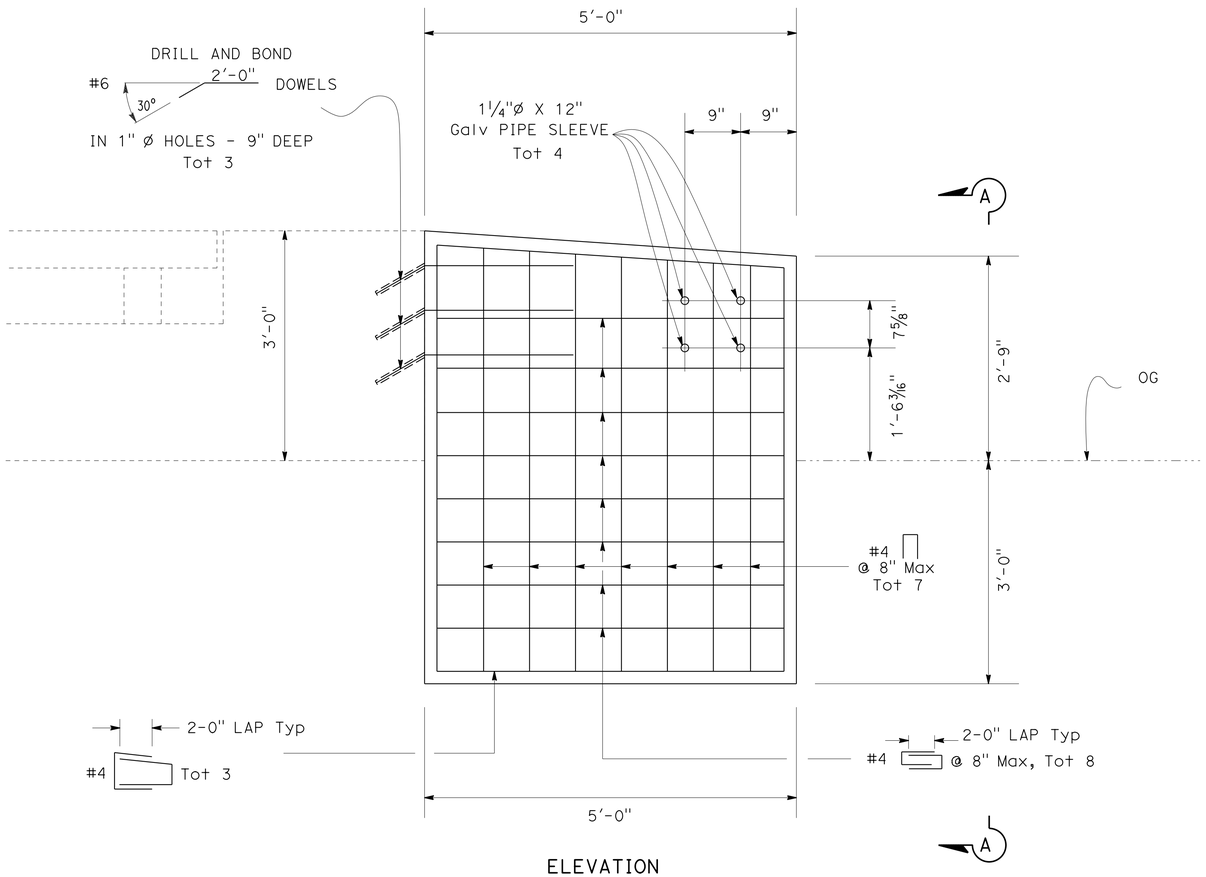

ELEVATION

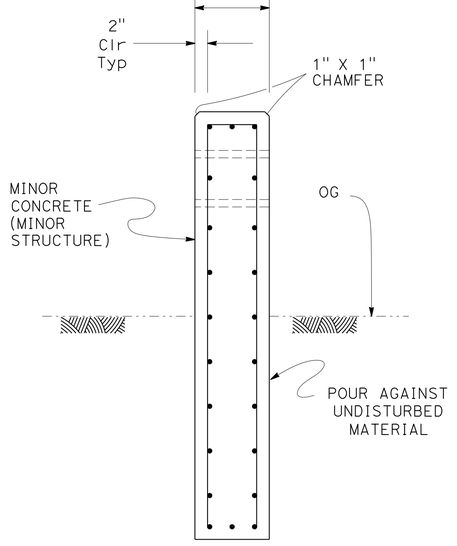

SECTION A-A

CONCRETE END BLOCK DETAILS

VARIOUS ROUTES

LOCATIONS : 306, 307, 346, 347, 363

CONSTRUCTION DETAILS

NO SCALE

C-84

REVISED BY	DATE REVISED

CALCULATED-DESIGNED BY
CHECKED BY

GARY DEKENS
RAIMUND YAMBAO

FUNCTIONAL SUPERVISOR
DEANN SPANGLER

STATE OF CALIFORNIA - DEPARTMENT OF TRANSPORTATION
DESIGN

LAST REVISION 01-23-14
DATE PLOTTED => 29-MAY-2014
TIME PLOTTED => 08:44

BORDER LAST REVISED 7/2/2010

USERNAME => s130875
DGN FILE => 0300020450ga084.dgn

RELATIVE BORDER SCALE IS IN INCHES 0 1 2 3

UNIT 0327

PROJECT NUMBER & PHASE 03000204501

Dist	COUNTY	ROUTE	POST MILES TOTAL PROJECT	SHEET No.	TOTAL SHEETS
03	But,Col,Gln Sut,Yol,Yub	16,32,45 70,113,162	Var	102	195

Raimund Yambao 2-10-14
REGISTERED CIVIL ENGINEER DATE

2-10-14
PLANS APPROVAL DATE

REGISTERED PROFESSIONAL ENGINEER
RAIMUND J. YAMBAO
No. 80379
Exp. 03-31-15
CIVIL
STATE OF CALIFORNIA

THE STATE OF CALIFORNIA OR ITS OFFICERS OR AGENTS SHALL NOT BE RESPONSIBLE FOR THE ACCURACY OR COMPLETENESS OF SCANNED COPIES OF THIS PLAN SHEET.

NOTE:

1. EXISTING UTILITY FACILITIES HAVE NOT BEEN PLOTTED ON THESE PLANS.

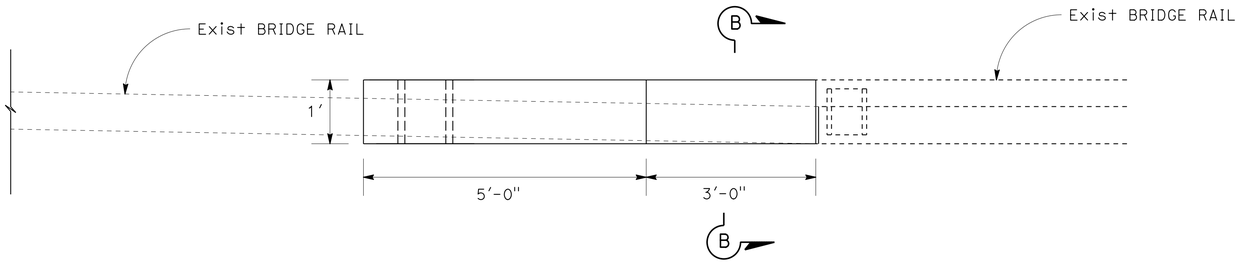

PLAN

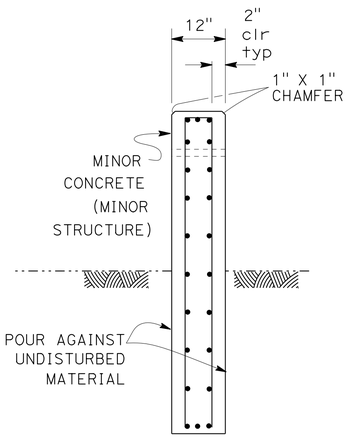

SECTION A-A

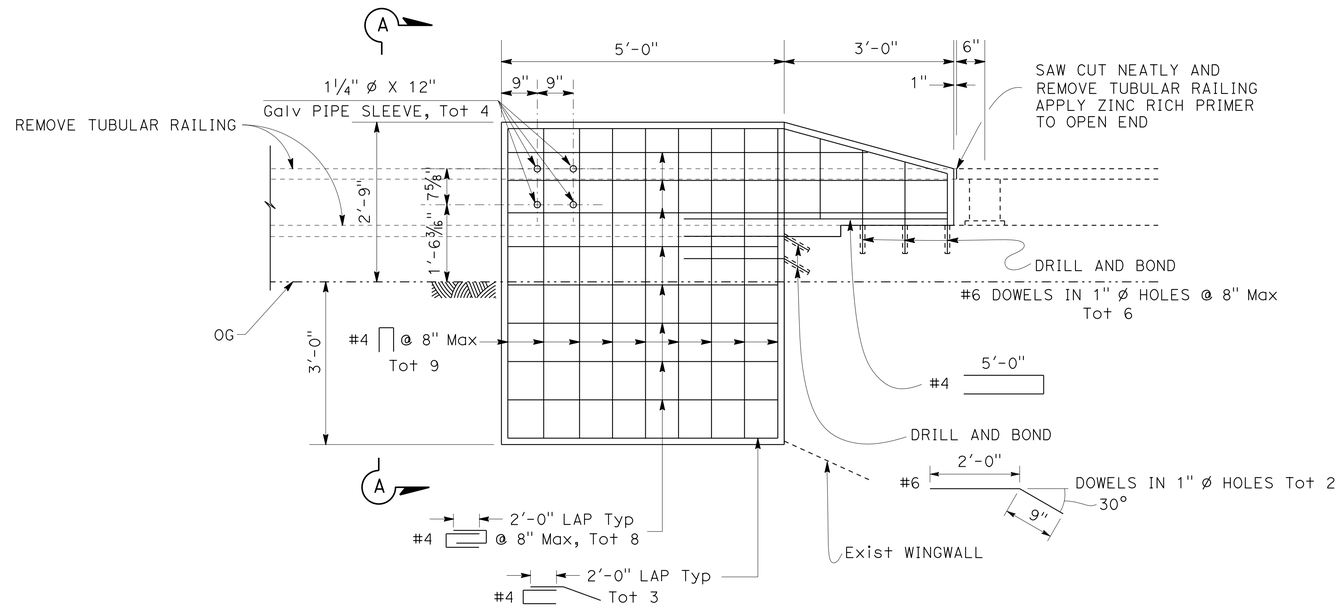

ELEVATION

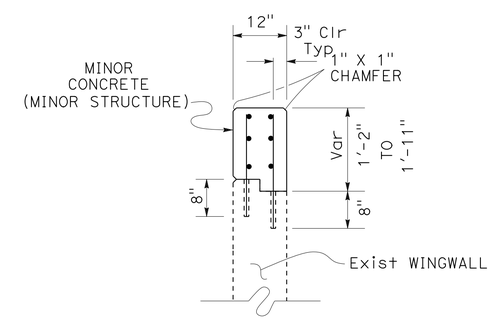

SECTION B-B

CONCRETE END BLOCK DETAILS

ROUTE 162

LOCATIONS : 308, 309, 364, 365

CONSTRUCTION DETAILS

NO SCALE

C-85

STATE OF CALIFORNIA - DEPARTMENT OF TRANSPORTATION
Caltrans
DESIGN

FUNCTIONAL SUPERVISOR: DEANN SPANGLER
CALCULATED-DESIGNED BY: GARY DEKENS
CHECKED BY: RAIMUND YAMBAO
REVISED BY
DATE REVISED

LAST REVISION 01-23-14
DATE PLOTTED => 29-MAY-2014
TIME PLOTTED => 08:44

NOTE:

1. EXISTING UTILITY FACILITIES HAVE NOT BEEN PLOTTED ON THESE PLANS.

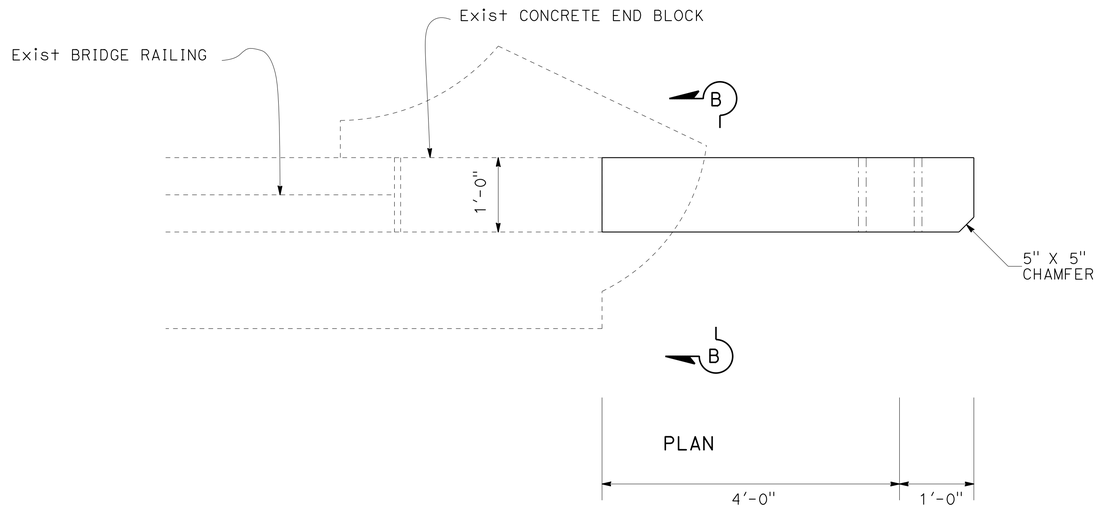

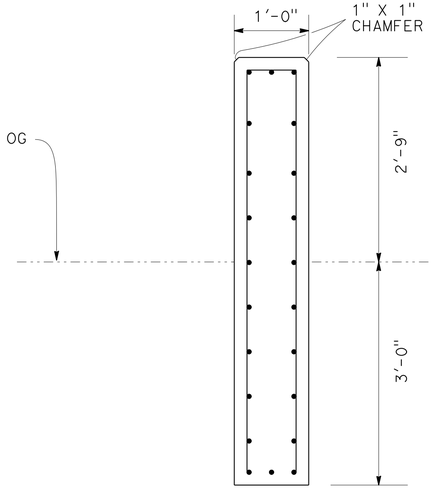

SECTION B-B

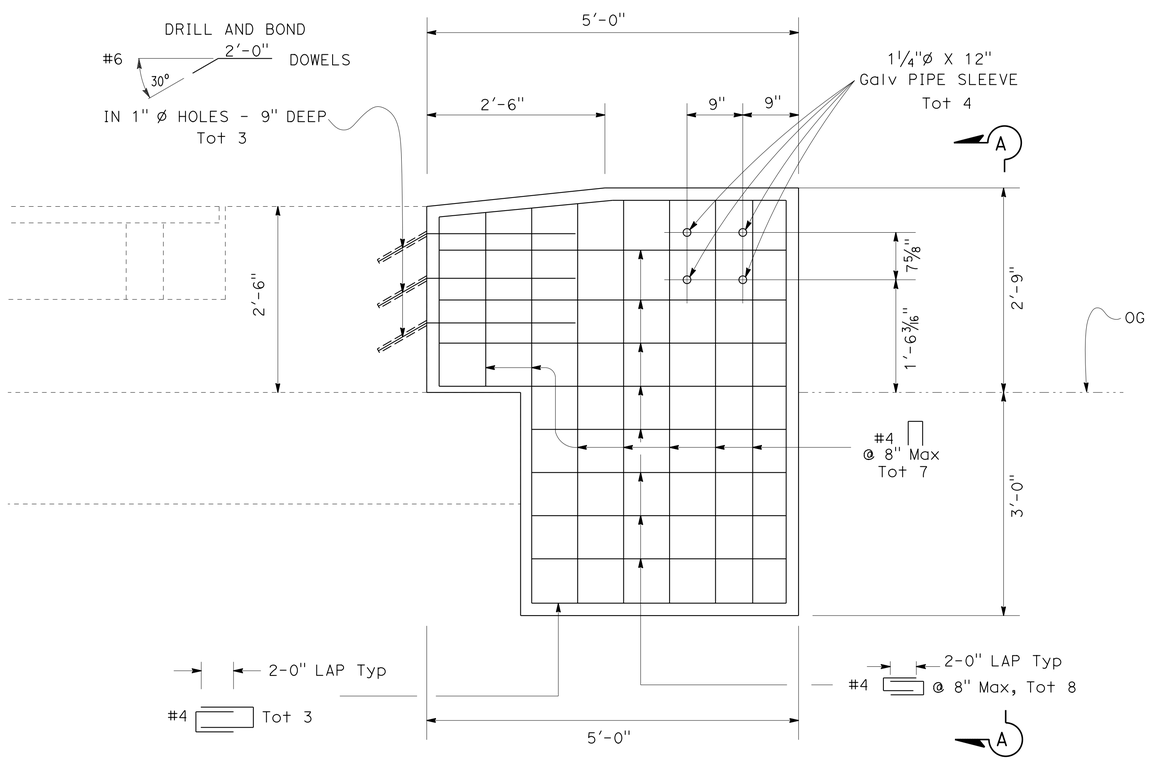

ELEVATION

SECTION A-A

CONCRETE END BLOCK DETAILS

ROUTE 162

LOCATIONS : 310, 311, 366, 367

CONSTRUCTION DETAILS

NO SCALE

C-86

Dist	COUNTY	ROUTE	POST MILES TOTAL PROJECT	SHEET No.	TOTAL SHEETS
03	But,Col,Gln Sut,Yol,Yub	16,32,45 70,113,162	Var	103	195

Raimund Yambao 2-10-14
REGISTERED CIVIL ENGINEER DATE

2-10-14
PLANS APPROVAL DATE

REGISTERED PROFESSIONAL ENGINEER
RAIMUND J. YAMBAO
No. 80379
Exp. 03-31-15
CIVIL
STATE OF CALIFORNIA

THE STATE OF CALIFORNIA OR ITS OFFICERS OR AGENTS SHALL NOT BE RESPONSIBLE FOR THE ACCURACY OR COMPLETENESS OF SCANNED COPIES OF THIS PLAN SHEET.

CALCULATED-DESIGNED BY: GARY DEKENS
CHECKED BY: RAIMUND YAMBAO
REVISED BY
DATE REVISED
FUNCTIONAL SUPERVISOR: DEANN SPANGLER
STATE OF CALIFORNIA - DEPARTMENT OF TRANSPORTATION
Caltrans® DESIGN

LAST REVISION 01-23-14
DATE PLOTTED => 29-MAY-2014
TIME PLOTTED => 08:44

NOTE:

1. EXISTING UTILITY FACILITIES HAVE NOT BEEN PLOTTED ON THESE PLANS.

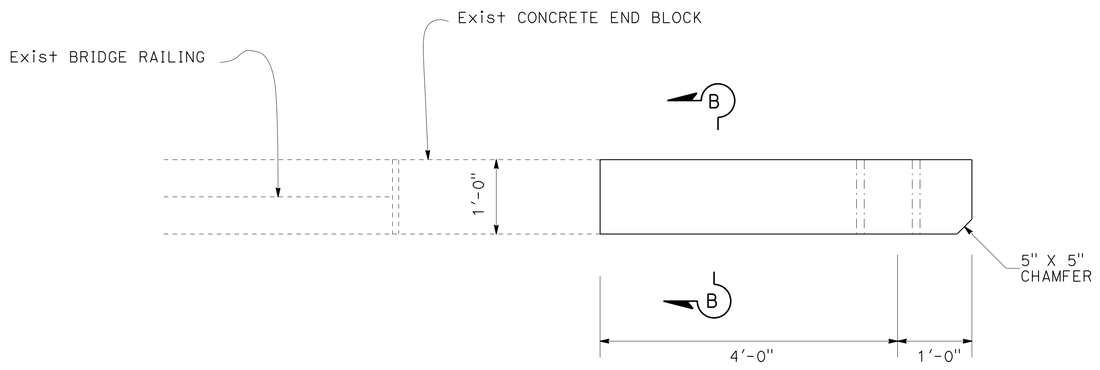

PLAN

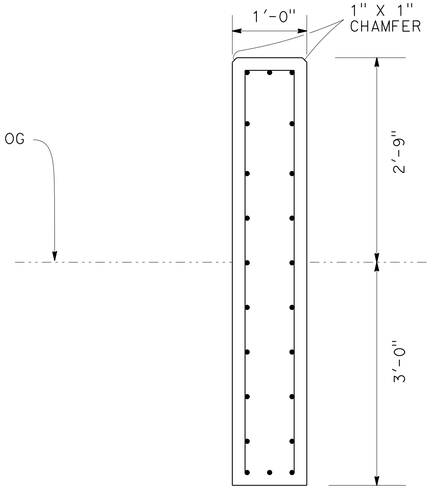

SECTION B-B

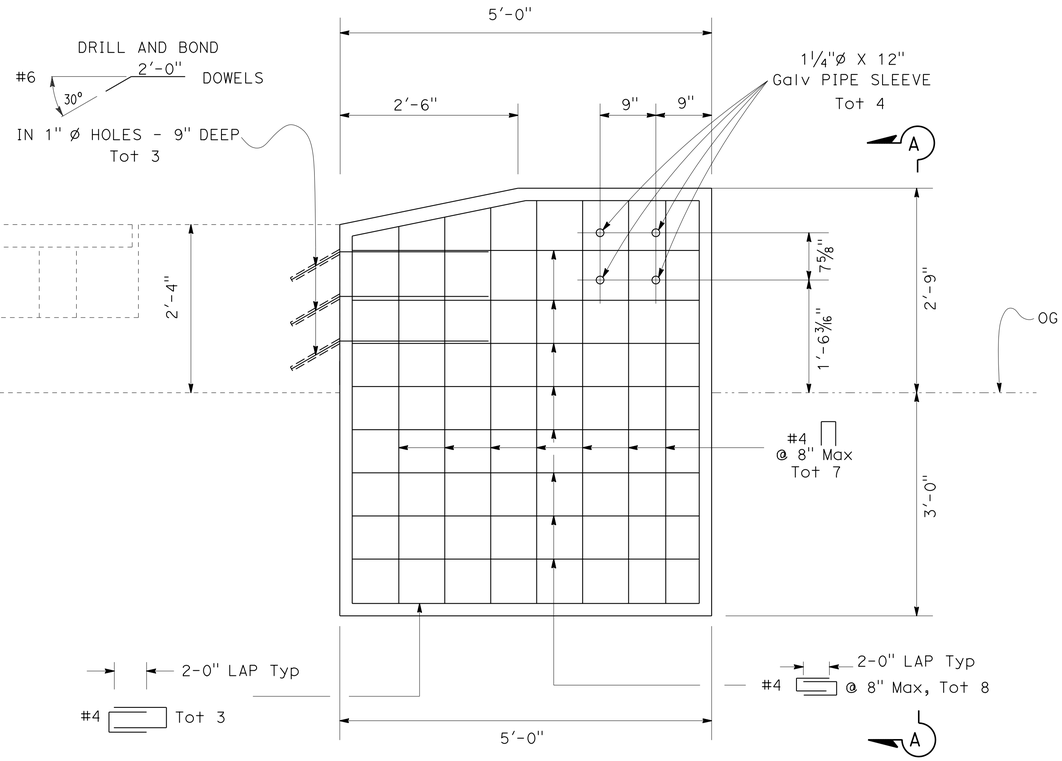

ELEVATION

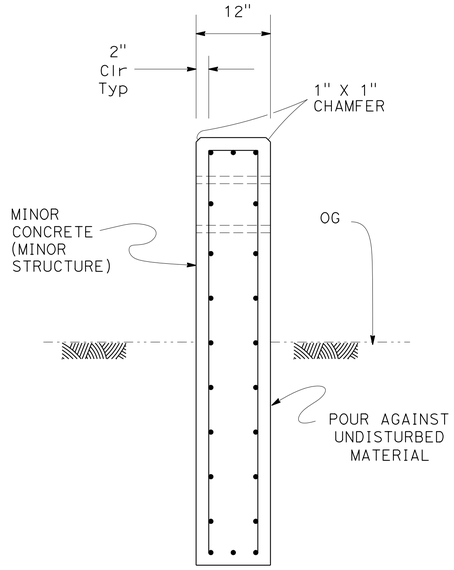

SECTION A-A

CONCRETE END BLOCK DETAILS

VARIOUS ROUTES

LOCATIONS : 312, 313, 314, 315, 371, 375

CONSTRUCTION DETAILS

NO SCALE

C-87

Dist	COUNTY	ROUTE	POST MILES TOTAL PROJECT	SHEET No.	TOTAL SHEETS
03	But,Col,Gln Sut,Yol,Yub	16,32,45 70,113,162	Var	104	195

Raimund Yambao 2-10-14
REGISTERED CIVIL ENGINEER DATE

2-10-14
PLANS APPROVAL DATE

RAIMUND J. YAMBAO No. 80379 Exp. 03-31-15 CIVIL — REGISTERED PROFESSIONAL ENGINEER — STATE OF CALIFORNIA

THE STATE OF CALIFORNIA OR ITS OFFICERS OR AGENTS SHALL NOT BE RESPONSIBLE FOR THE ACCURACY OR COMPLETENESS OF SCANNED COPIES OF THIS PLAN SHEET.

CALCULATED-DESIGNED BY: GARY DEKENS
CHECKED BY: RAIMUND YAMBAO
REVISED BY
DATE REVISED
FUNCTIONAL SUPERVISOR: DEANN SPANGLER
STATE OF CALIFORNIA - DEPARTMENT OF TRANSPORTATION
Caltrans® DESIGN

LAST REVISION 01-23-14
DATE PLOTTED => 29-MAY-2014
TIME PLOTTED => 08:44

NOTE:

1. EXISTING UTILITY FACILITIES HAVE NOT BEEN PLOTTED ON THESE PLANS.

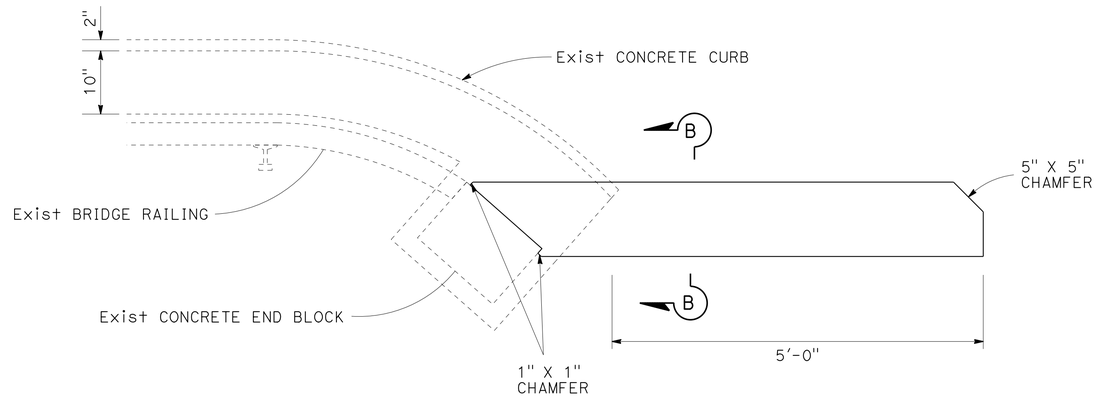

PLAN

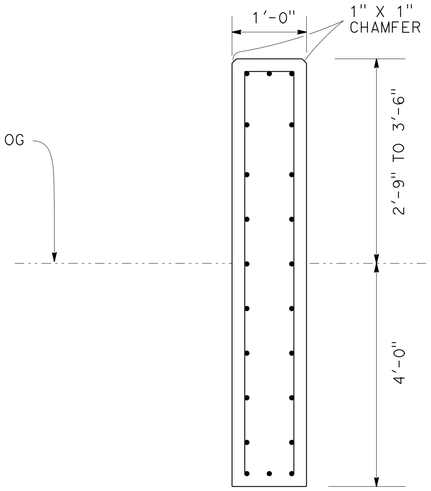

SECTION B-B

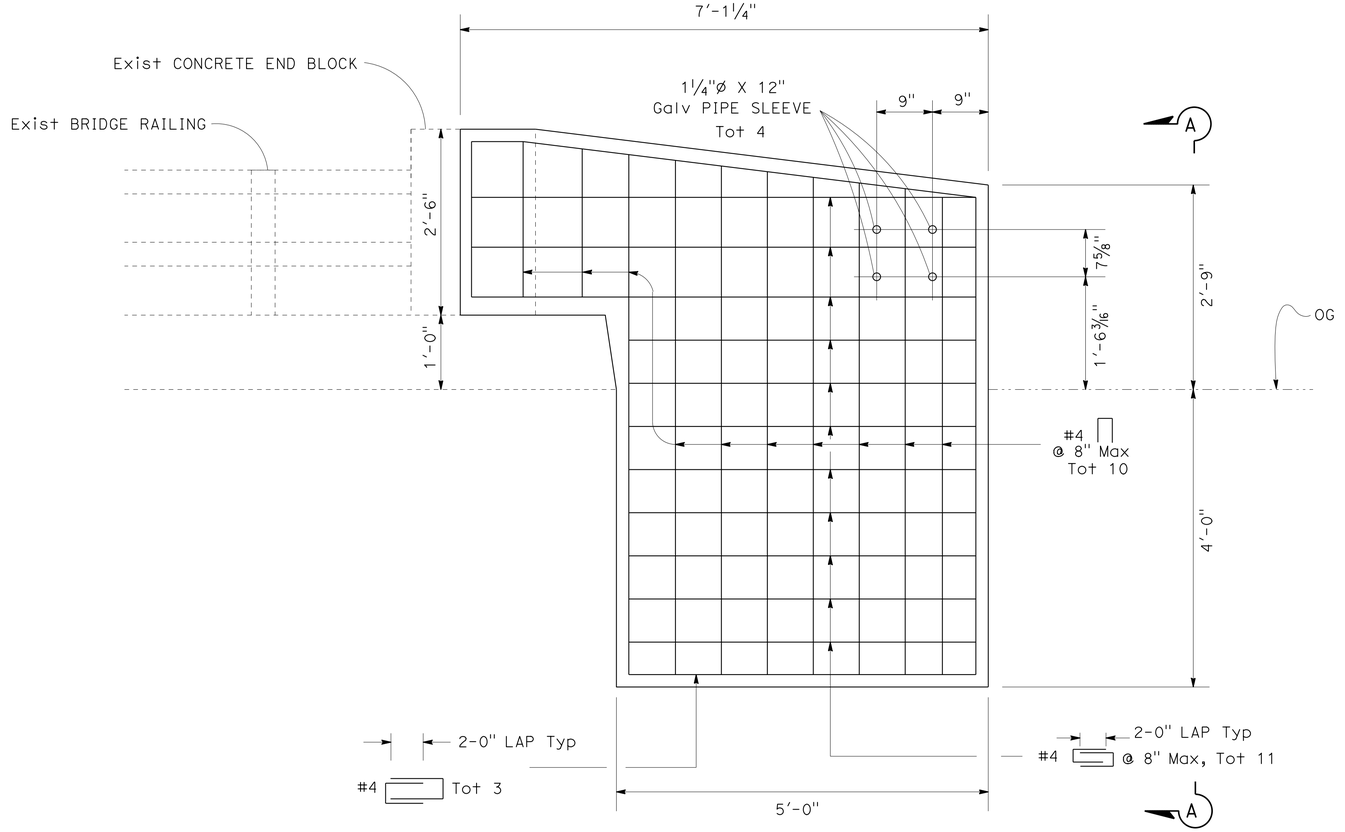

ELEVATION

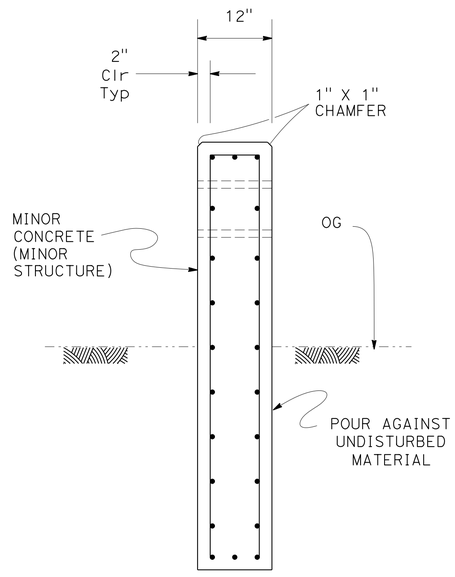

SECTION A-A

CONCRETE END BLOCK DETAILS

VARIOUS ROUTES

LOCATIONS : 316, 317, 320, 321, 372, 373, 376, 377

CONSTRUCTION DETAILS

NO SCALE

C-88

Dist	COUNTY	ROUTE	POST MILES TOTAL PROJECT	SHEET No.	TOTAL SHEETS
03	But,Col,Gln Sut,Yol,Yub	16,32,45 70,113,162	Var	105	195

Raimund Yambao 2-10-14
REGISTERED CIVIL ENGINEER DATE

2-10-14
PLANS APPROVAL DATE

REGISTERED PROFESSIONAL ENGINEER
RAIMUND J. YAMBAO
No. 80379
Exp. 03-31-15
CIVIL
STATE OF CALIFORNIA

THE STATE OF CALIFORNIA OR ITS OFFICERS OR AGENTS SHALL NOT BE RESPONSIBLE FOR THE ACCURACY OR COMPLETENESS OF SCANNED COPIES OF THIS PLAN SHEET.

CALCULATED-DESIGNED BY: GARY DEKENS
CHECKED BY: RAIMUND YAMBAO
REVISED BY
DATE REVISED
FUNCTIONAL SUPERVISOR: DEANN SPANGLER
STATE OF CALIFORNIA - DEPARTMENT OF TRANSPORTATION
Caltrans® DESIGN

LAST REVISION 01-23-14
DATE PLOTTED => 29-MAY-2014
TIME PLOTTED => 08:44

NOTE:

1. EXISTING UTILITY FACILITIES HAVE NOT BEEN PLOTTED ON THESE PLANS.

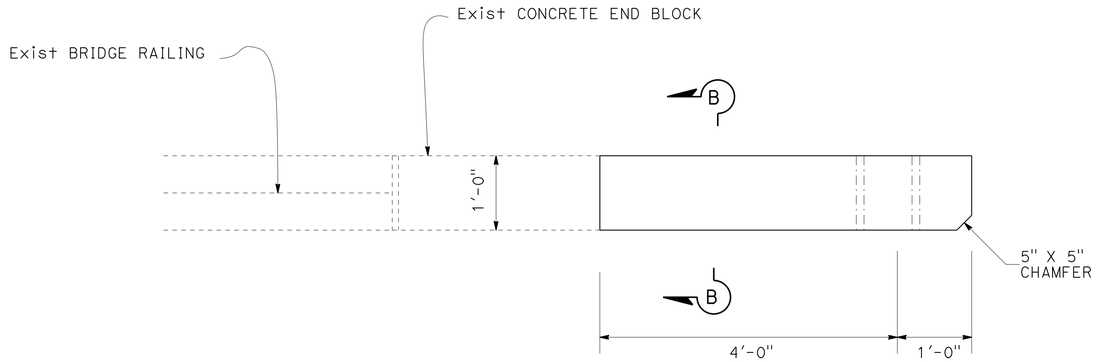

PLAN

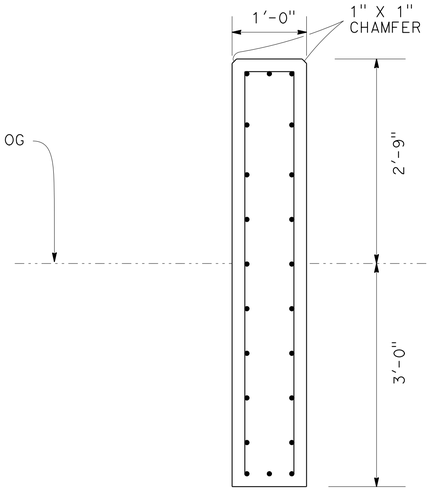

SECTION B-B

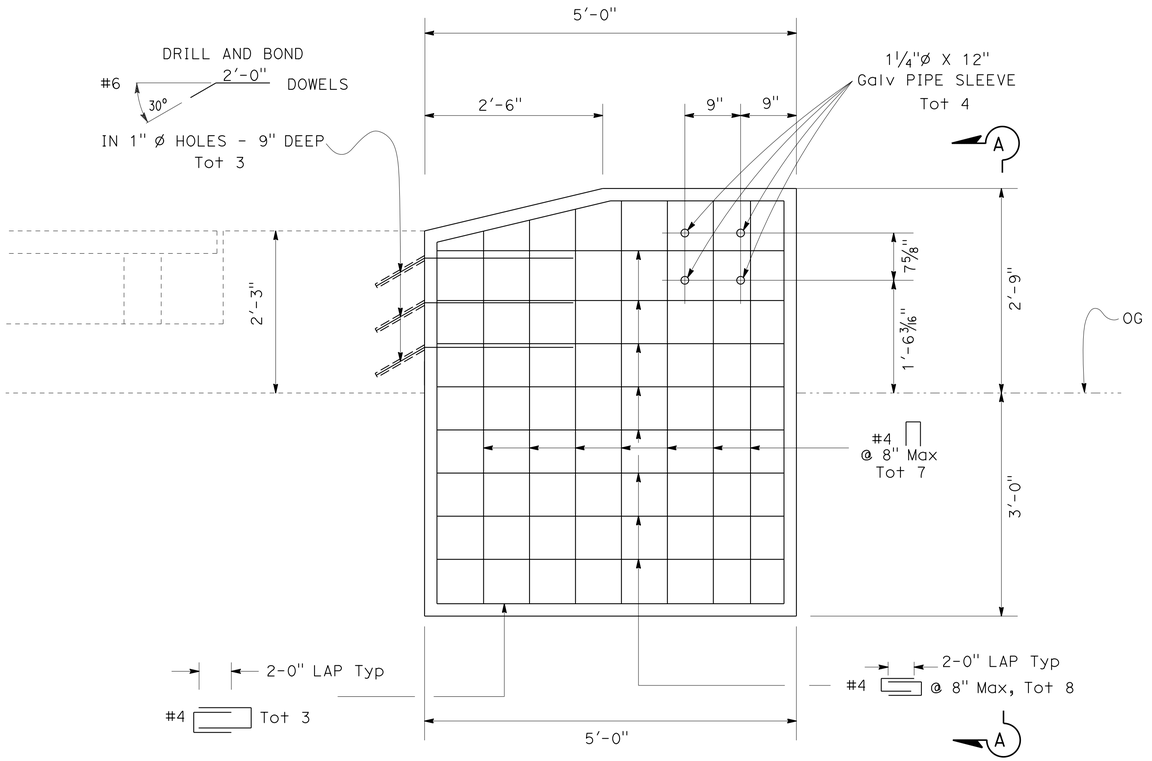

ELEVATION

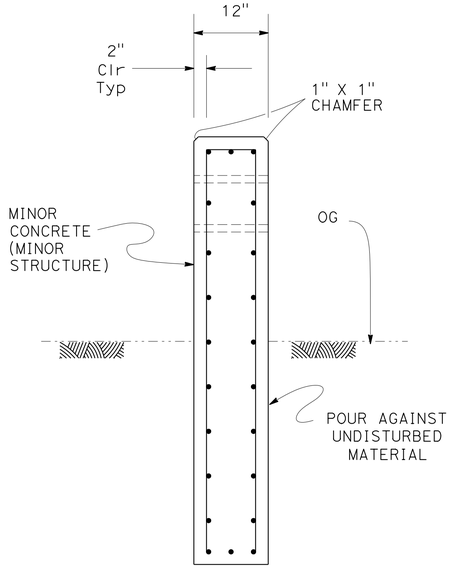

SECTION A-A

CONCRETE END BLOCK DETAILS

VARIOUS ROUTES

LOCATIONS : 318, 319, 374

CONSTRUCTION DETAILS

NO SCALE

C-89

Dist	COUNTY	ROUTE	POST MILES TOTAL PROJECT	SHEET No.	TOTAL SHEETS
03	But,Col,Gln Sut,Yol,Yub	16,32,45 70,113,162	Var	106	195

Raimund Yambao 2-10-14
REGISTERED CIVIL ENGINEER DATE

2-10-14
PLANS APPROVAL DATE

REGISTERED PROFESSIONAL ENGINEER
RAIMUND J. YAMBAO
No. 80379
Exp. 03-31-15
CIVIL
STATE OF CALIFORNIA

THE STATE OF CALIFORNIA OR ITS OFFICERS OR AGENTS SHALL NOT BE RESPONSIBLE FOR THE ACCURACY OR COMPLETENESS OF SCANNED COPIES OF THIS PLAN SHEET.

CALCULATED-DESIGNED BY: GARY DEKENS
CHECKED BY: RAIMUND YAMBAO
REVISED BY
DATE REVISED
FUNCTIONAL SUPERVISOR: DEANN SPANGLER
STATE OF CALIFORNIA - DEPARTMENT OF TRANSPORTATION
Caltrans® DESIGN

LAST REVISION 01-23-14
DATE PLOTTED => 29-MAY-2014
TIME PLOTTED => 08:44

Dist	COUNTY	ROUTE	POST MILES TOTAL PROJECT	SHEET No.	TOTAL SHEETS
03	But,Col,Gln Sut,Yol,Yub	16,32,45 70,113,162	Var	107	195

Raimund Yambao 2-10-14
REGISTERED CIVIL ENGINEER DATE

2-10-14
PLANS APPROVAL DATE

REGISTERED PROFESSIONAL ENGINEER
RAIMUND J. YAMBAO
No. 80379
Exp. 03-31-15
CIVIL
STATE OF CALIFORNIA

THE STATE OF CALIFORNIA OR ITS OFFICERS OR AGENTS SHALL NOT BE RESPONSIBLE FOR THE ACCURACY OR COMPLETENESS OF SCANNED COPIES OF THIS PLAN SHEET.

NOTE:

1. EXISTING UTILITY FACILITIES HAVE NOT BEEN PLOTTED ON THESE PLANS.

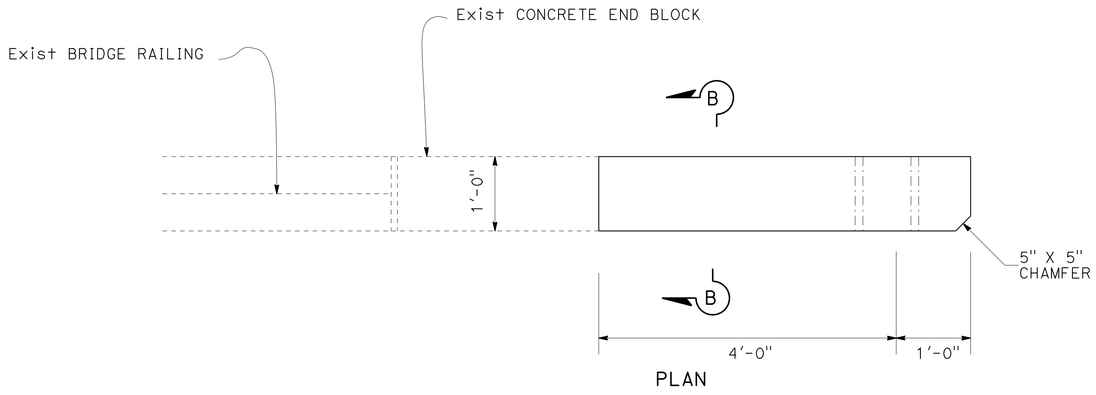

PLAN

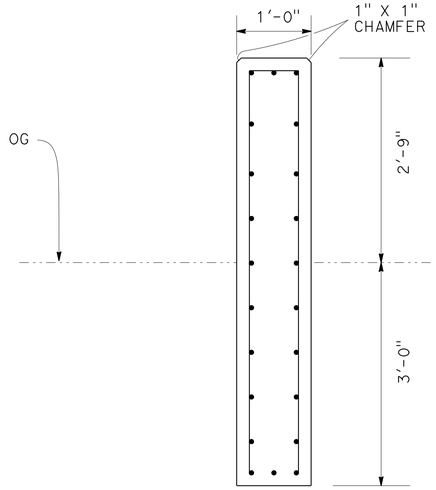

SECTION B-B

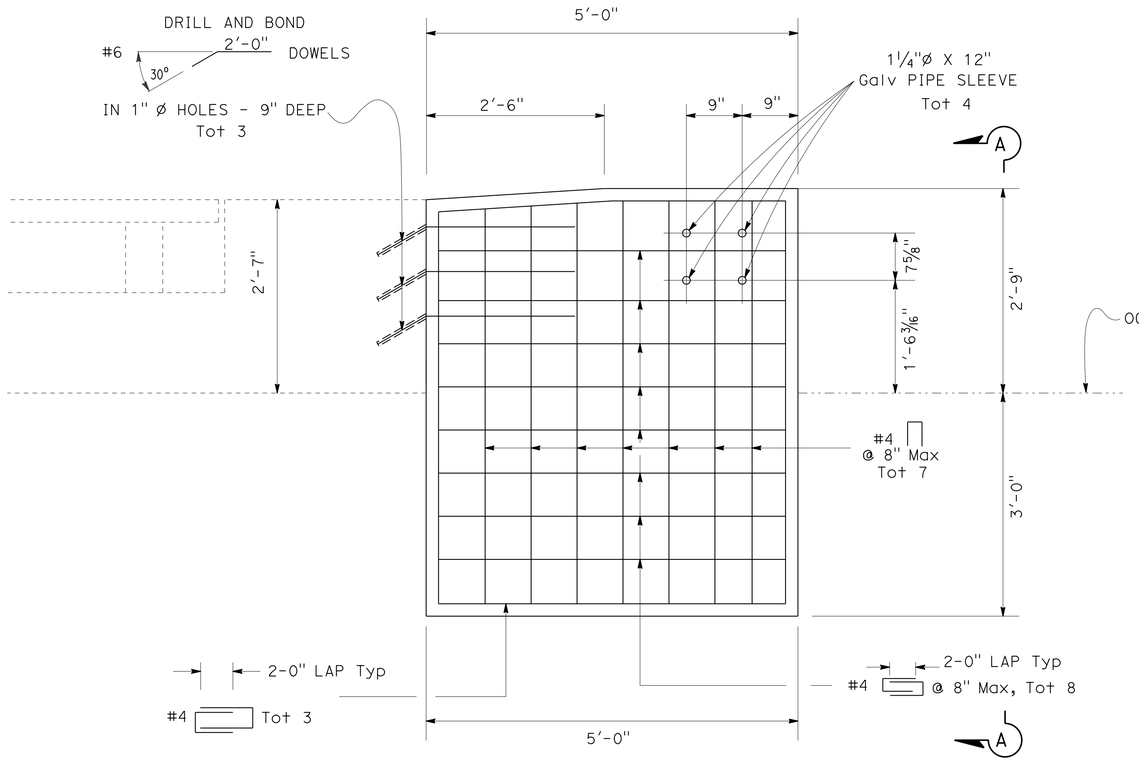

ELEVATION

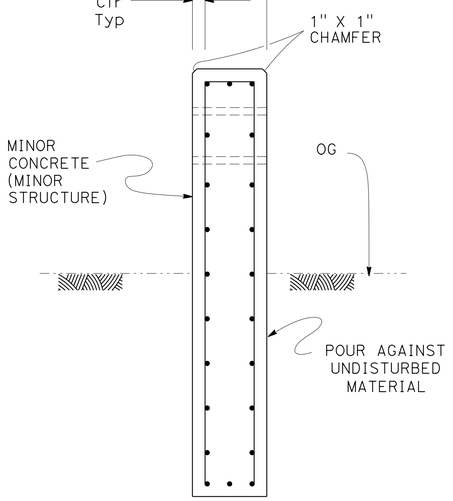

SECTION A-A

CONCRETE END BLOCK DETAILS

VARIOUS ROUTES
LOCATIONS : 327, 328, 370, 383

CONSTRUCTION DETAILS

NO SCALE

C-90

STATE OF CALIFORNIA - DEPARTMENT OF TRANSPORTATION
Caltrans® DESIGN
FUNCTIONAL SUPERVISOR: DEANN SPANGLER
CALCULATED-DESIGNED BY: GARY DEKENS
CHECKED BY: RAIMUND YAMBAO
REVISED BY
DATE REVISED

LAST REVISION 01-23-14
DATE PLOTTED => 29-MAY-2014
TIME PLOTTED => 08:44

BORDER LAST REVISED 7/2/2010
USERNAME => s130875
DGN FILE => 0300020450ga090.dgn
RELATIVE BORDER SCALE IS IN INCHES 0 1 2 3
UNIT 0327
PROJECT NUMBER & PHASE 03000204501

Dist	COUNTY	ROUTE	POST MILES TOTAL PROJECT	SHEET No.	TOTAL SHEETS
03	But,Col,Gln Sut,Yol,Yub	16,32,45 70,113,162	Var	108	195

Raimund Yambao 2-10-14
REGISTERED CIVIL ENGINEER DATE

2-10-14
PLANS APPROVAL DATE

RAIMUND J. YAMBAO No. 80379 Exp. 03-31-15 CIVIL — REGISTERED PROFESSIONAL ENGINEER — STATE OF CALIFORNIA

THE STATE OF CALIFORNIA OR ITS OFFICERS OR AGENTS SHALL NOT BE RESPONSIBLE FOR THE ACCURACY OR COMPLETENESS OF SCANNED COPIES OF THIS PLAN SHEET.

NOTE:

1. EXISTING UTILITY FACILITIES HAVE NOT BEEN PLOTTED ON THESE PLANS.

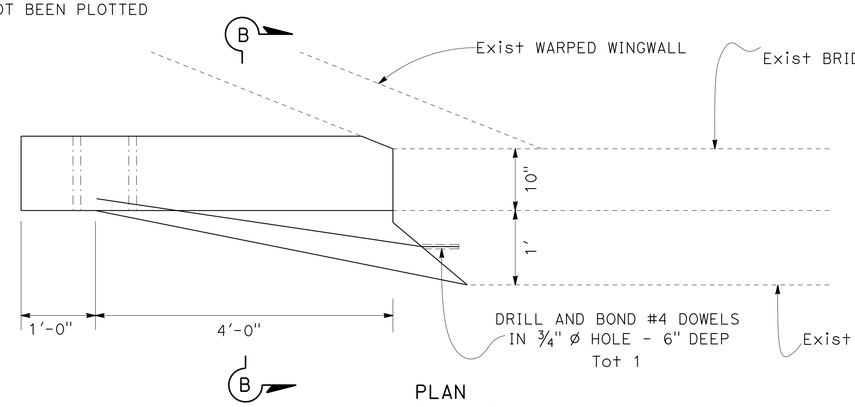

PLAN
LOCATIONS : 310

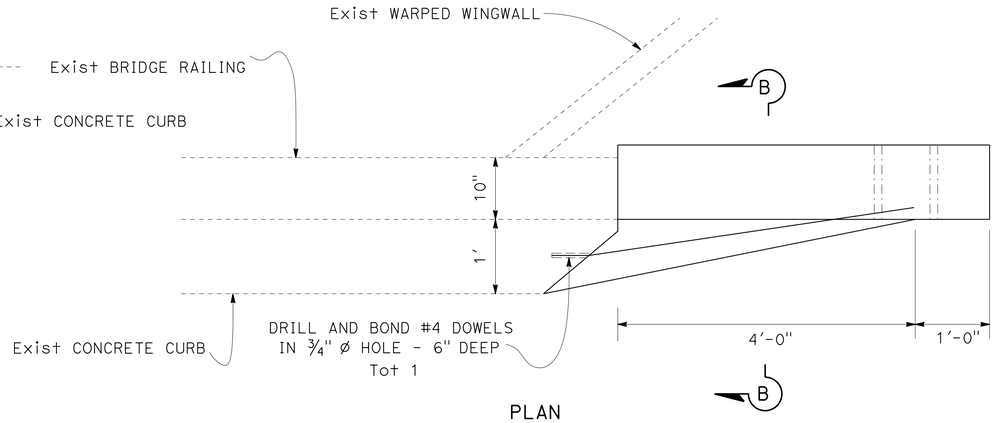

PLAN
LOCATIONS : 311

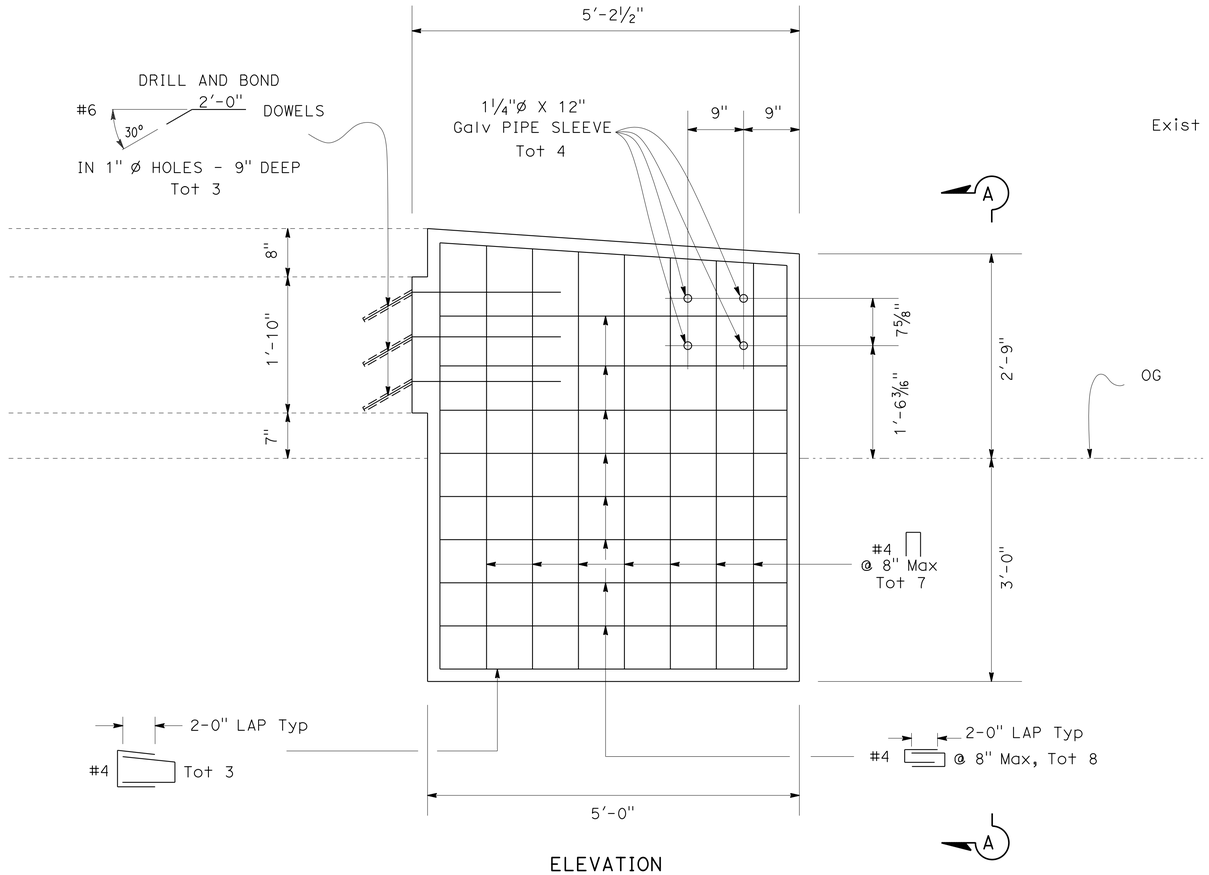

ELEVATION

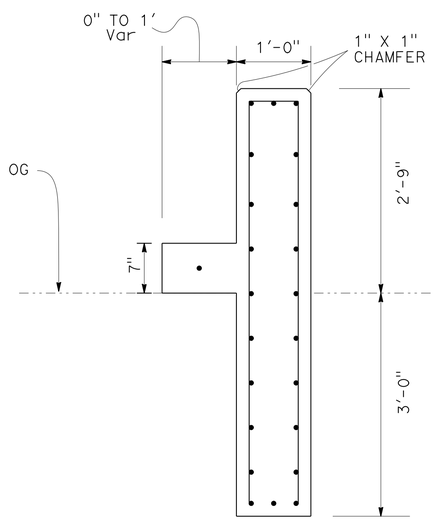

SECTION B-B

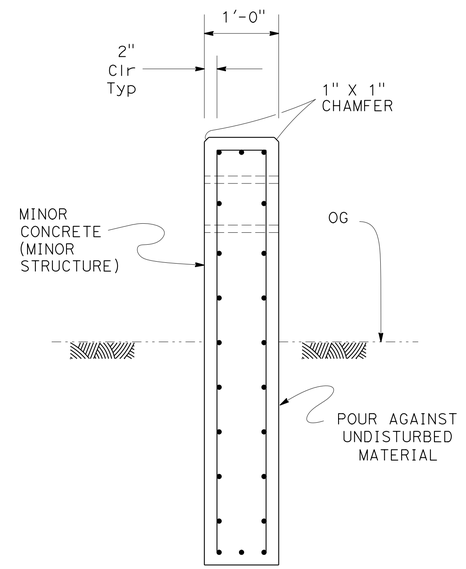

SECTION A-A

CONCRETE END BLOCK DETAILS

ROUTE 162 GLENN COUNTY
LOCATIONS : 348, 349

CONSTRUCTION DETAILS

NO SCALE

C-91

REVISED BY | DATE REVISED
GARY DEKENS | RAIMUND YAMBAO
CALCULATED-DESIGNED BY | CHECKED BY
FUNCTIONAL SUPERVISOR: DEANN SPANGLER
STATE OF CALIFORNIA - DEPARTMENT OF TRANSPORTATION
DESIGN
Caltrans

LAST REVISION 01-23-14 | DATE PLOTTED => 29-MAY-2014 | TIME PLOTTED => 08:44

BORDER LAST REVISED 7/2/2010 | USERNAME => s130875 | DGN FILE => 0300020450ga091.dgn | RELATIVE BORDER SCALE IS IN INCHES 0 1 2 3 | UNIT 0327 | PROJECT NUMBER & PHASE 03000204501

NOTE:

1. EXISTING UTILITY FACILITIES HAVE NOT BEEN PLOTTED ON THESE PLANS.

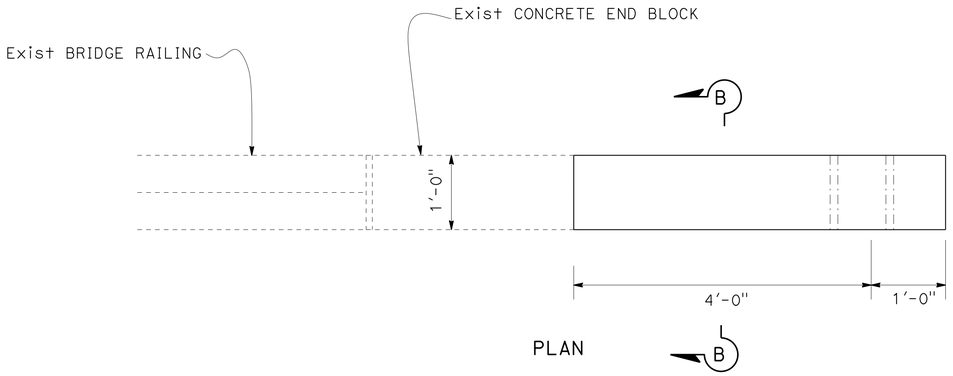

PLAN

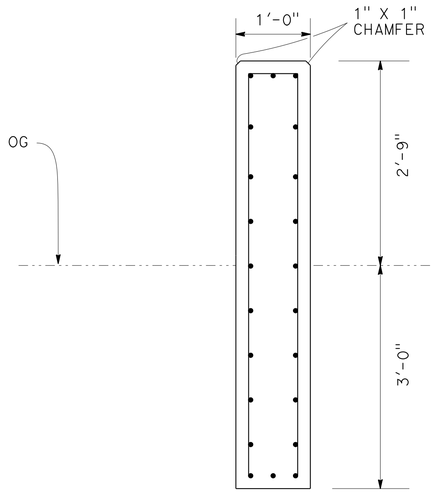

SECTION B-B

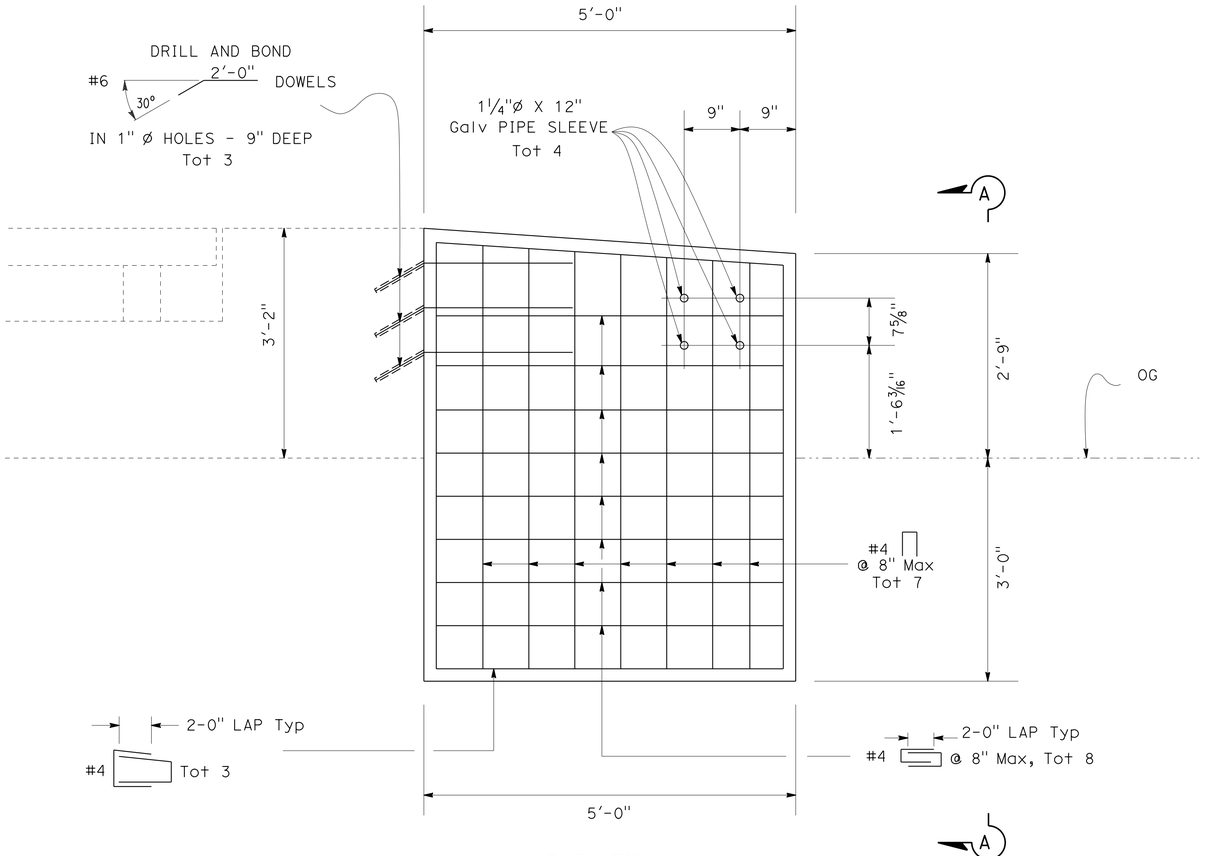

ELEVATION

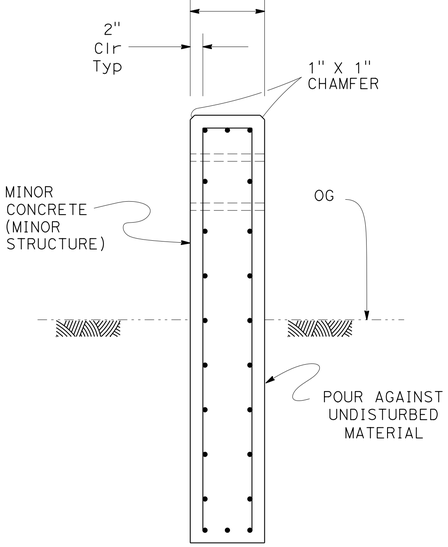

SECTION A-A

CONCRETE END BLOCK DETAILS

ROUTE 162

LOCATIONS : 362

CONSTRUCTION DETAILS

NO SCALE

C-92

Dist	COUNTY	ROUTE	POST MILES TOTAL PROJECT	SHEET No.	TOTAL SHEETS
03	But,Col,Gln Sut,Yol,Yub	16,32,45 70,113,162	Var	109	195

Raimund Yambao 2-10-14
REGISTERED CIVIL ENGINEER DATE

2-10-14
PLANS APPROVAL DATE

REGISTERED PROFESSIONAL ENGINEER
RAIMUND J. YAMBAO
No. 80379
Exp. 03-31-15
CIVIL
STATE OF CALIFORNIA

THE STATE OF CALIFORNIA OR ITS OFFICERS OR AGENTS SHALL NOT BE RESPONSIBLE FOR THE ACCURACY OR COMPLETENESS OF SCANNED COPIES OF THIS PLAN SHEET.

CALCULATED-DESIGNED BY: GARY DEKENS
CHECKED BY: RAIMUND YAMBAO
REVISED BY
DATE REVISED
FUNCTIONAL SUPERVISOR: DEANN SPANGLER
STATE OF CALIFORNIA - DEPARTMENT OF TRANSPORTATION
Caltrans® DESIGN

LAST REVISION 01-23-14
DATE PLOTTED => 29-MAY-2014
TIME PLOTTED => 08:44

Dist	COUNTY	ROUTE	POST MILES TOTAL PROJECT	SHEET No.	TOTAL SHEETS
03	But,Col,Gln Sut,Yol,Yub	16,32,45 70,113,162	Var	110	195

Raimund Yambao 2-10-14
REGISTERED CIVIL ENGINEER DATE

2-10-14
PLANS APPROVAL DATE

REGISTERED PROFESSIONAL ENGINEER
RAIMUND J. YAMBAO
No. 80379
Exp. 03-31-15
CIVIL
STATE OF CALIFORNIA

THE STATE OF CALIFORNIA OR ITS OFFICERS OR AGENTS SHALL NOT BE RESPONSIBLE FOR THE ACCURACY OR COMPLETENESS OF SCANNED COPIES OF THIS PLAN SHEET.

NOTE:

1. EXISTING UTILITY FACILITIES HAVE NOT BEEN PLOTTED ON THESE PLANS.

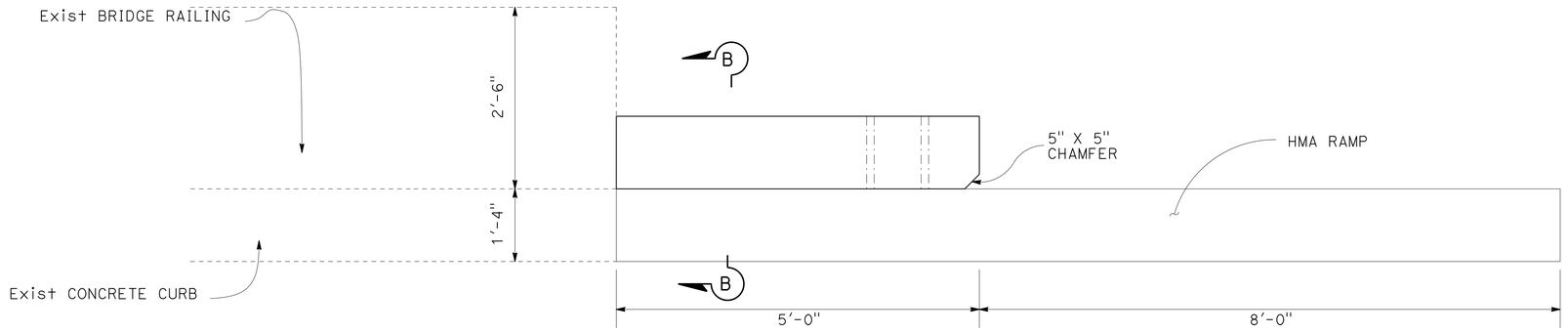

PLAN

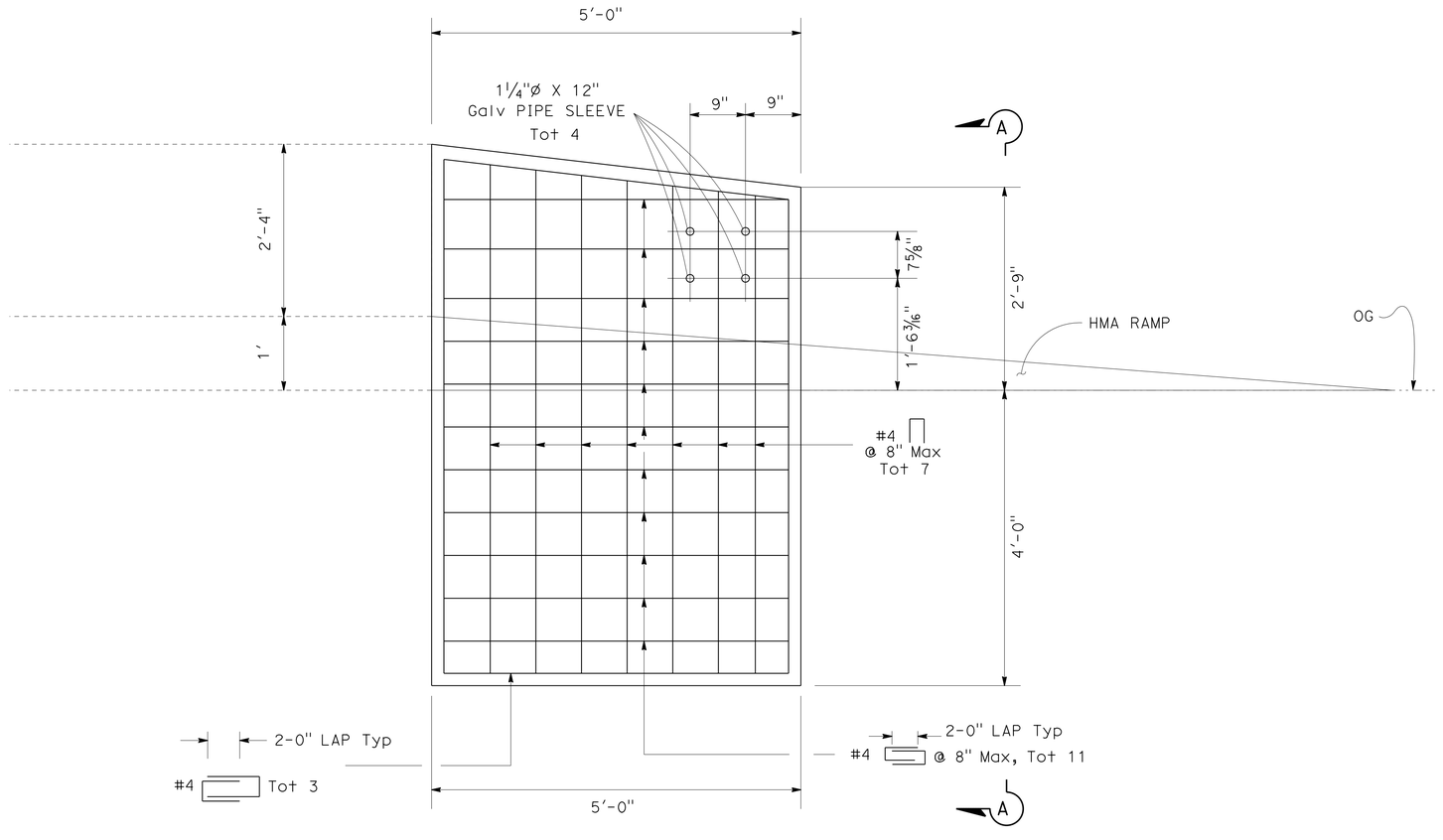

ELEVATION

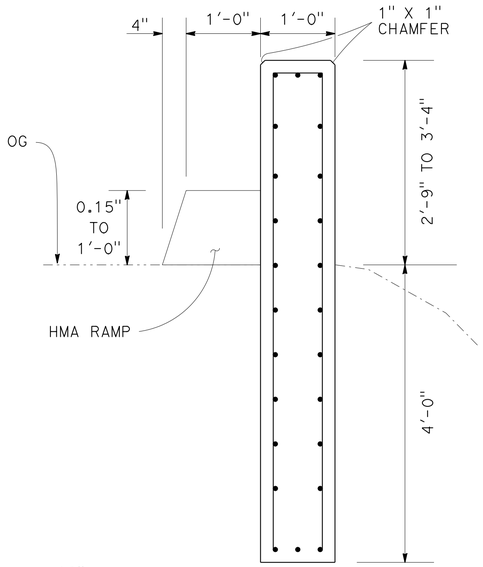

SECTION B-B

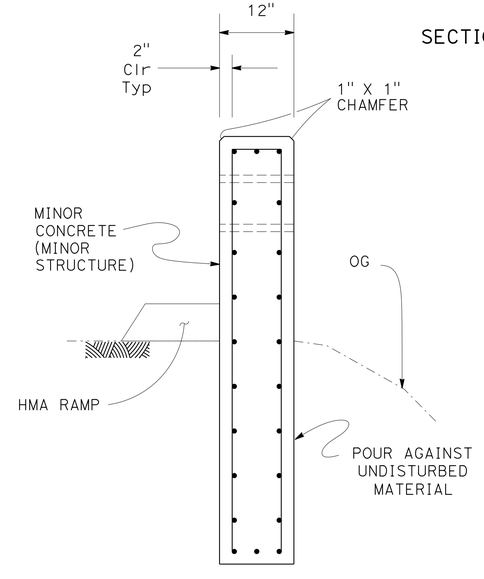

SECTION A-A

CONCRETE END BLOCK DETAILS

ROUTE 16

LOCATIONS : 394, 395, 411, 412

CONSTRUCTION DETAILS

NO SCALE

C-93

STATE OF CALIFORNIA - DEPARTMENT OF TRANSPORTATION
DESIGN
Caltrans

FUNCTIONAL SUPERVISOR: DEANN SPANGLER
CALCULATED-DESIGNED BY: GARY DEKENS
CHECKED BY: RAIMUND YAMBAO
REVISED BY
DATE REVISED

LAST REVISION 01-23-14 | DATE PLOTTED => 29-MAY-2014 | TIME PLOTTED => 08:44

BORDER LAST REVISED 7/2/2010 | USERNAME => s130875 | DGN FILE => 0300020450ga093.dgn | RELATIVE BORDER SCALE IS IN INCHES 0 1 2 3 | UNIT 0327 | PROJECT NUMBER & PHASE 03000204501

NOTE:

1. EXISTING UTILITY FACILITIES HAVE NOT BEEN PLOTTED ON THESE PLANS.

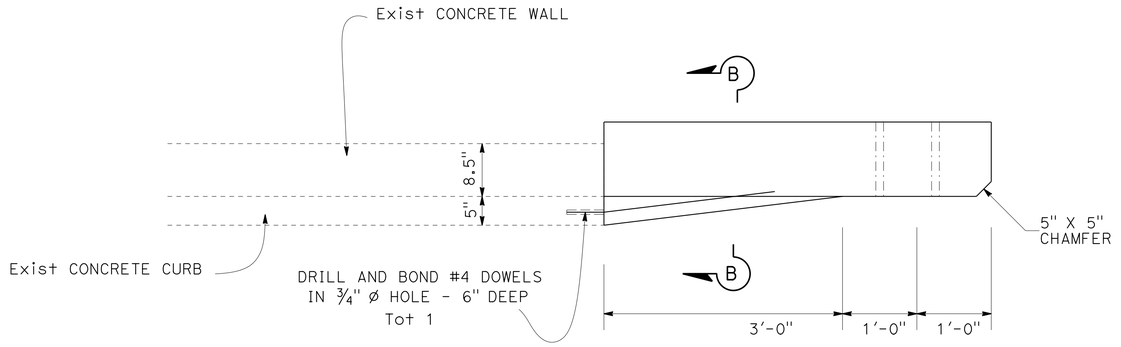

PLAN

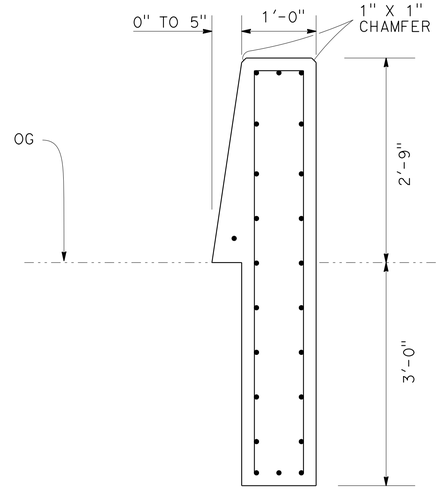

SECTION B-B

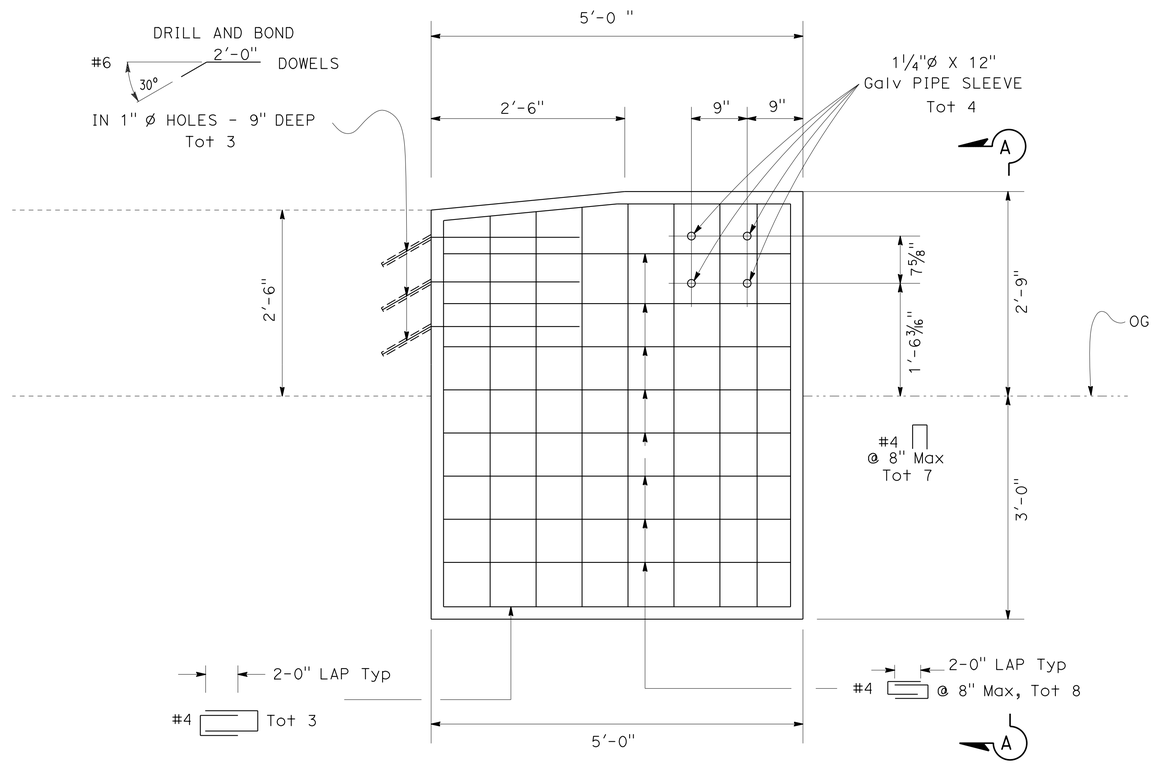

ELEVATION

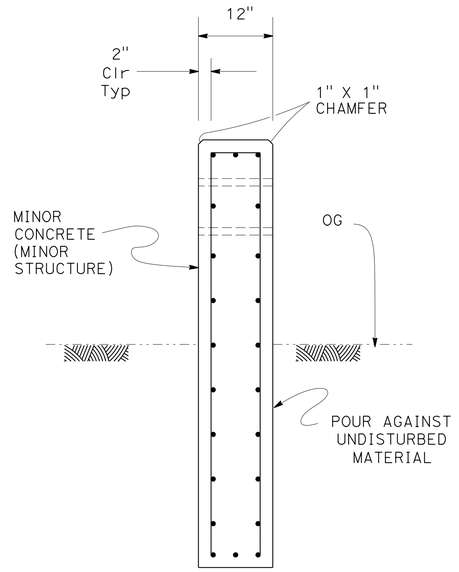

SECTION A-A

CONCRETE END BLOCK DETAILS

ROUTE 16 (Yol)

LOCATIONS : 397, 415

CONSTRUCTION DETAILS

NO SCALE

C-94

Dist	COUNTY	ROUTE	POST MILES TOTAL PROJECT	SHEET No.	TOTAL SHEETS
03	But,Col,Gln Sut,Yol,Yub	16,32,45 70,113,162	Var	111	195

Raimund Yambao 2-10-14
REGISTERED CIVIL ENGINEER DATE

2-10-14
PLANS APPROVAL DATE

RAIMUND J. YAMBAO No. 80379 Exp. 03-31-15 CIVIL — REGISTERED PROFESSIONAL ENGINEER — STATE OF CALIFORNIA

THE STATE OF CALIFORNIA OR ITS OFFICERS OR AGENTS SHALL NOT BE RESPONSIBLE FOR THE ACCURACY OR COMPLETENESS OF SCANNED COPIES OF THIS PLAN SHEET.

CALCULATED-DESIGNED BY: GARY DEKENS
CHECKED BY: RAIMUND YAMBAO
REVISED BY / DATE REVISED:
FUNCTIONAL SUPERVISOR: DEANN SPANGLER
STATE OF CALIFORNIA - DEPARTMENT OF TRANSPORTATION
Caltrans® DESIGN

LAST REVISION 01-20-14
DATE PLOTTED => 29-MAY-2014
TIME PLOTTED => 08:44

NOTE:

1. EXISTING UTILITY FACILITIES HAVE NOT BEEN PLOTTED ON THESE PLANS.

Dist	COUNTY	ROUTE	POST MILES TOTAL PROJECT	SHEET No.	TOTAL SHEETS
03	But,Col,Gln Sut,Yol,Yub	16,32,45 70,113,162	Var	112	195

Raimund Yambao 2-10-14
REGISTERED CIVIL ENGINEER DATE

2-10-14
PLANS APPROVAL DATE

REGISTERED PROFESSIONAL ENGINEER
RAIMUND J. YAMBAO
No. 80379
Exp. 03-31-15
CIVIL
STATE OF CALIFORNIA

THE STATE OF CALIFORNIA OR ITS OFFICERS OR AGENTS SHALL NOT BE RESPONSIBLE FOR THE ACCURACY OR COMPLETENESS OF SCANNED COPIES OF THIS PLAN SHEET.

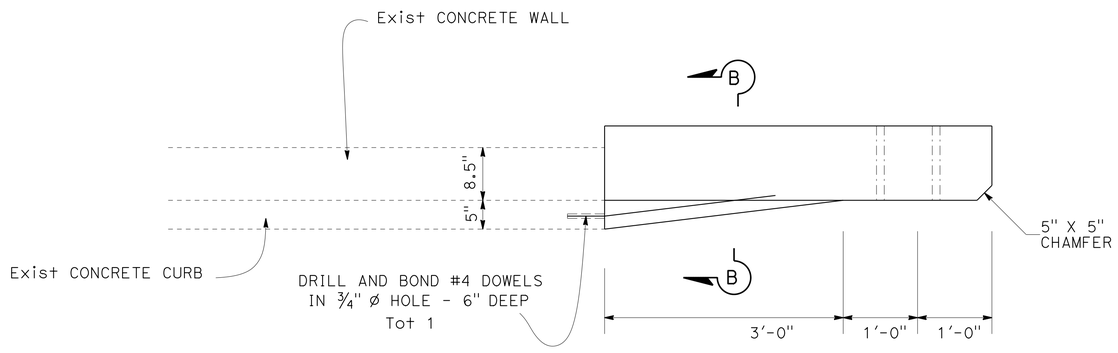

PLAN

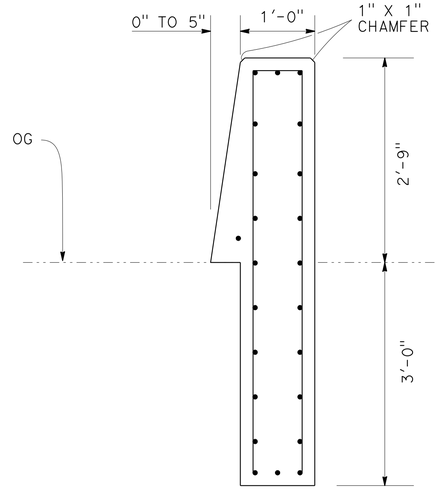

SECTION B-B

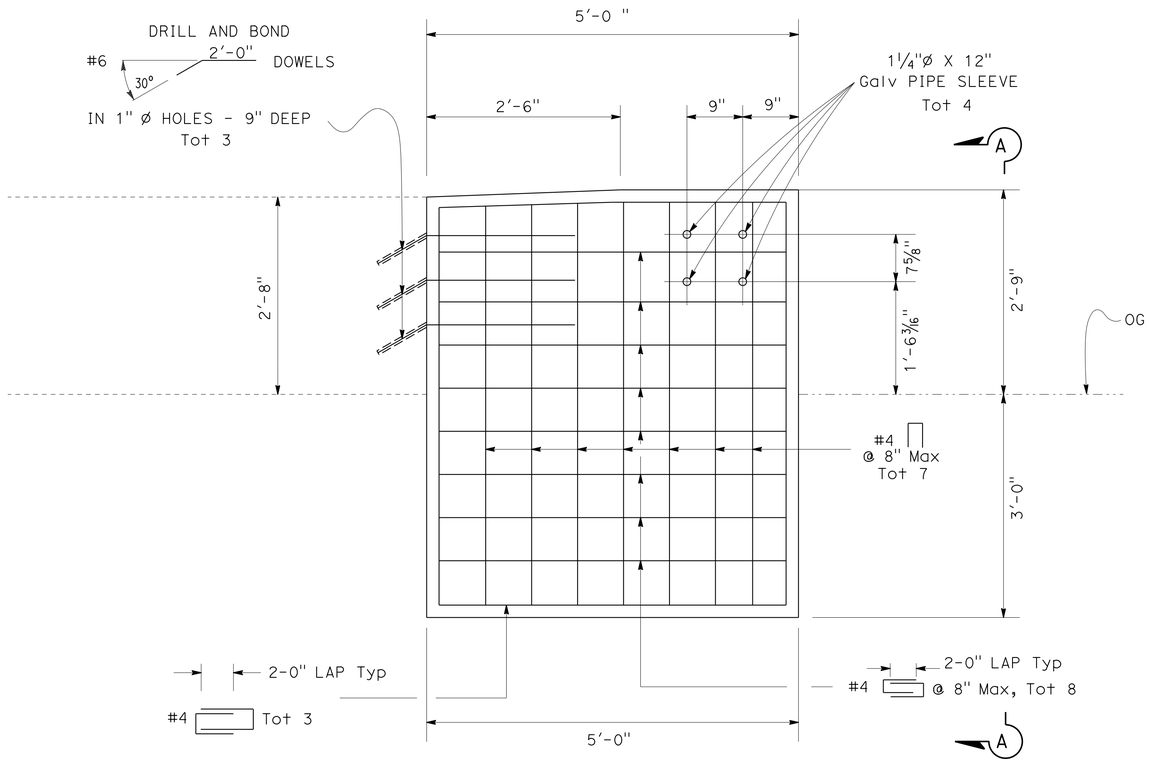

ELEVATION

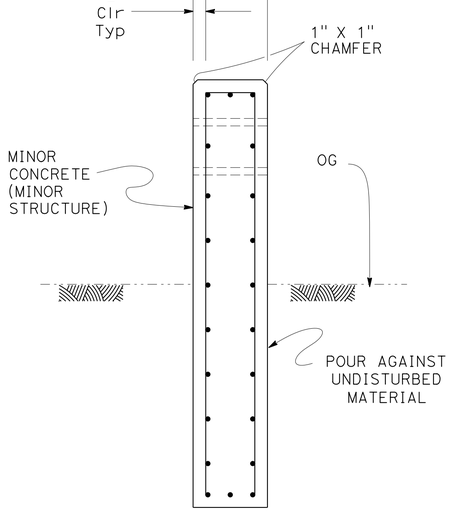

SECTION A-A

CONCRETE END BLOCK DETAILS

ROUTE 16 (Yol)

LOCATIONS : 398, 416

CONSTRUCTION DETAILS

NO SCALE

C-95

CALCULATED-DESIGNED BY	CHECKED BY	REVISED BY	DATE REVISED
GARY DEKENS	RAIMUND YAMBAO		

FUNCTIONAL SUPERVISOR: DEANN SPANGLER

STATE OF CALIFORNIA - DEPARTMENT OF TRANSPORTATION
DESIGN

LAST REVISION 01-23-14
DATE PLOTTED => 29-MAY-2014
TIME PLOTTED => 08:45

Dist	COUNTY	ROUTE	POST MILES TOTAL PROJECT	SHEET No.	TOTAL SHEETS
03	But,Col,Gln Sut,Yol,Yub	16,32,45 70,113,162	Var	113	195

Raimund Yambao 2-10-14
REGISTERED CIVIL ENGINEER DATE

2-10-14
PLANS APPROVAL DATE

REGISTERED PROFESSIONAL ENGINEER
RAIMUND J. YAMBAO
No. 80379
Exp. 03-31-15
CIVIL
STATE OF CALIFORNIA

THE STATE OF CALIFORNIA OR ITS OFFICERS OR AGENTS SHALL NOT BE RESPONSIBLE FOR THE ACCURACY OR COMPLETENESS OF SCANNED COPIES OF THIS PLAN SHEET.

NOTE:

1. EXISTING UTILITY FACILITIES HAVE NOT BEEN PLOTTED ON THESE PLANS.

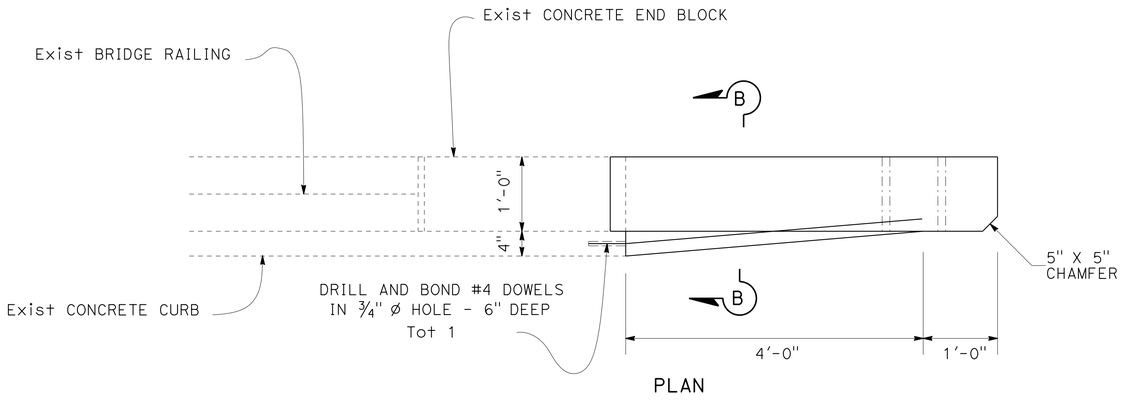

PLAN

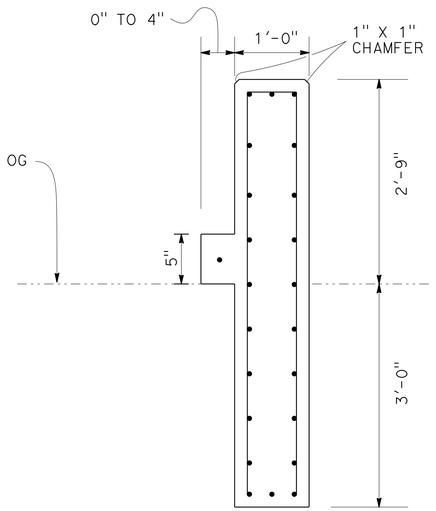

SECTION B-B

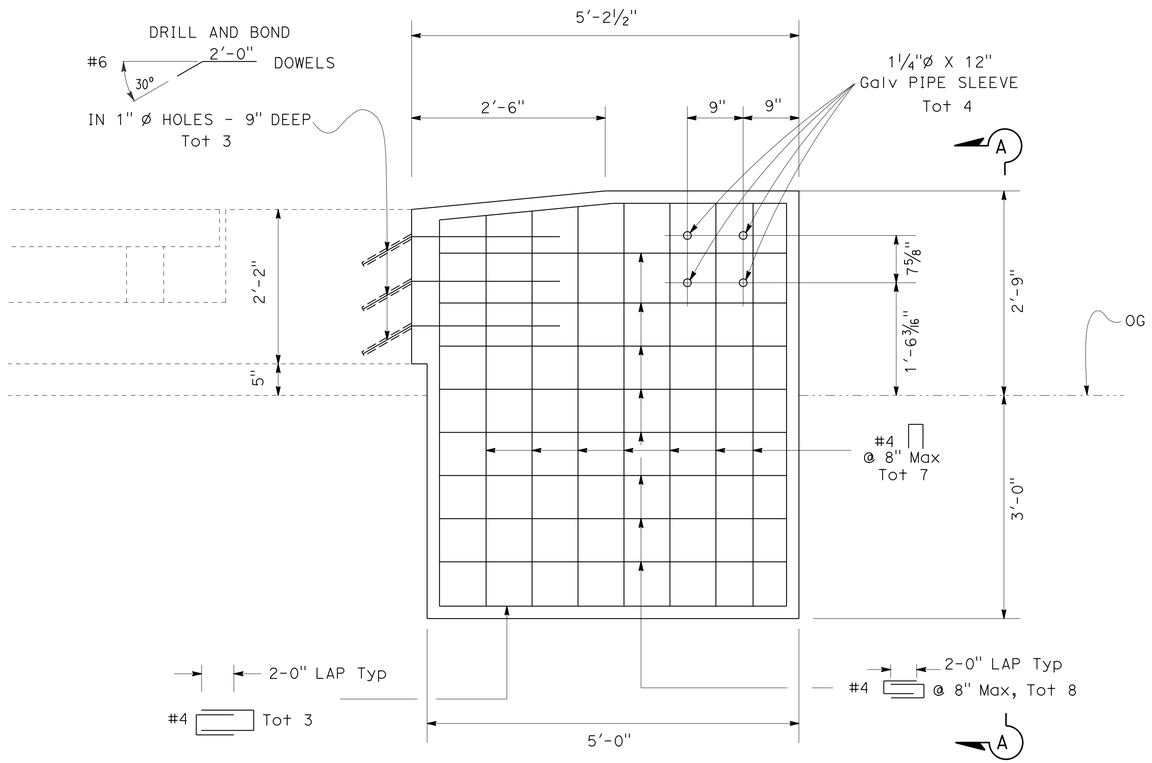

ELEVATION

SECTION A-A

CONCRETE END BLOCK DETAILS

VARIOUS ROUTES

LOCATIONS : 404, 405, 441

CONSTRUCTION DETAILS

NO SCALE

C-96

STATE OF CALIFORNIA - DEPARTMENT OF TRANSPORTATION
DESIGN
FUNCTIONAL SUPERVISOR: DEANN SPANGLER
CALCULATED-DESIGNED BY: GARY DEKENS
CHECKED BY: RAIMUND YAMBAO
REVISED BY
DATE REVISED

LAST REVISION 01-23-14
DATE PLOTTED => 29-MAY-2014
TIME PLOTTED => 08:45

BORDER LAST REVISED 7/2/2010
USERNAME => s130875
DGN FILE => 0300020450ga096.dgn
RELATIVE BORDER SCALE IS IN INCHES 0 1 2 3
UNIT 0327
PROJECT NUMBER & PHASE 03000204501

NOTE:

1. EXISTING UTILITY FACILITIES HAVE NOT BEEN PLOTTED ON THESE PLANS.

Dist	COUNTY	ROUTE	POST MILES TOTAL PROJECT	SHEET No.	TOTAL SHEETS
03	But,Col,Gln Sut,Yol,Yub	16,32,45 70,113,162	Var	114	195

Raimund Yambao 2-10-14
REGISTERED CIVIL ENGINEER DATE

2-10-14
PLANS APPROVAL DATE

REGISTERED PROFESSIONAL ENGINEER
RAIMUND J. YAMBAO
No. 80379
Exp. 03-31-15
CIVIL
STATE OF CALIFORNIA

THE STATE OF CALIFORNIA OR ITS OFFICERS OR AGENTS SHALL NOT BE RESPONSIBLE FOR THE ACCURACY OR COMPLETENESS OF SCANNED COPIES OF THIS PLAN SHEET.

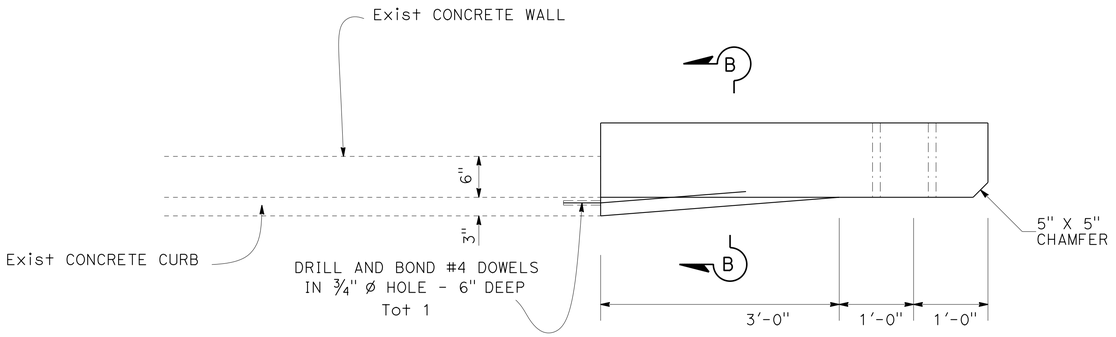

PLAN

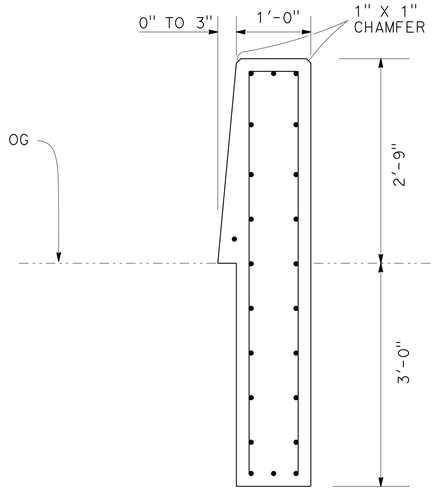

SECTION B-B

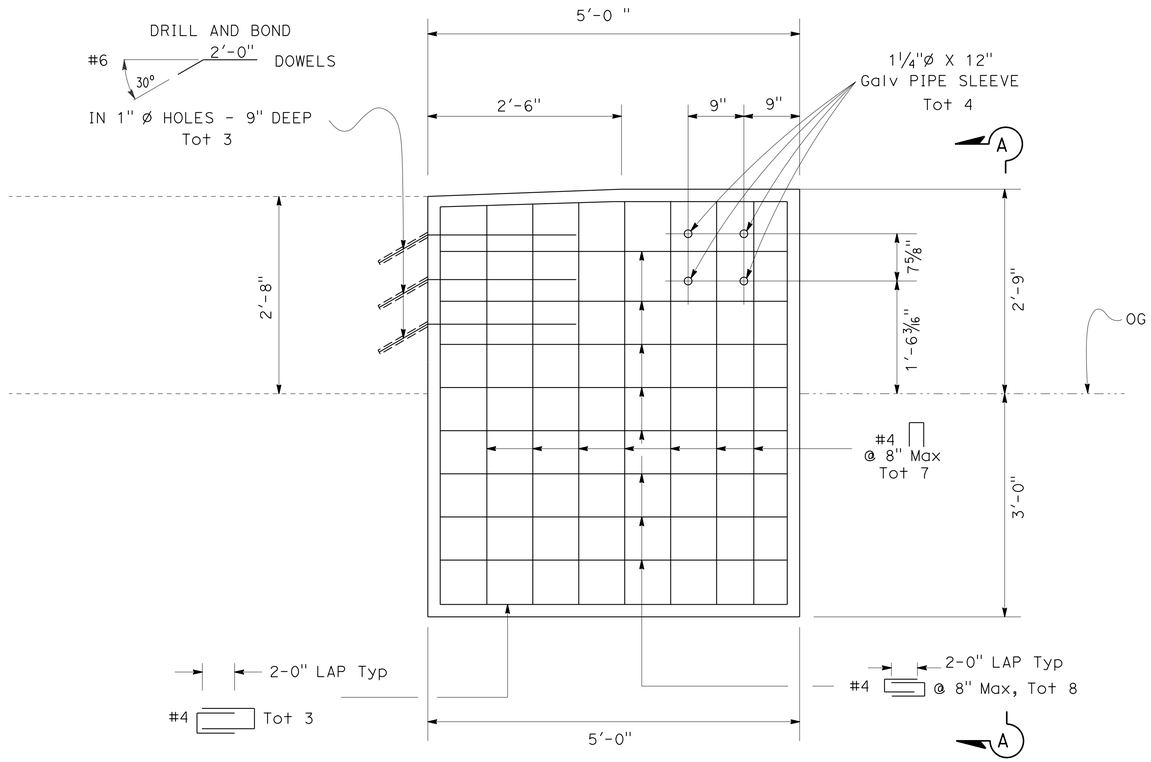

ELEVATION

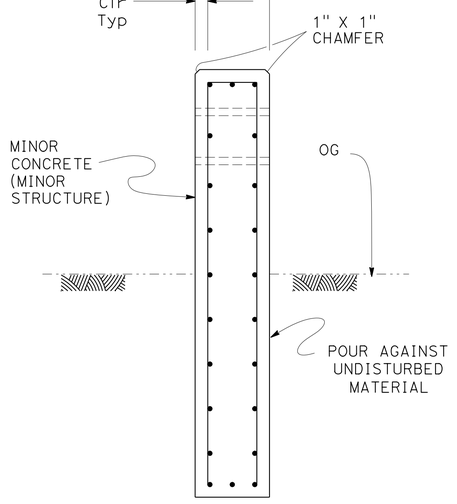

SECTION A-A

CONCRETE END BLOCK DETAILS

ROUTE 16 (Yol)

LOCATIONS : 407, 409, 425, 428, 430

CONSTRUCTION DETAILS

NO SCALE

C-97

STATE OF CALIFORNIA - DEPARTMENT OF TRANSPORTATION	DESIGN
FUNCTIONAL SUPERVISOR	DEANN SPANGLER
CALCULATED-DESIGNED BY	GARY DEKENS
CHECKED BY	RAIMUND YAMBAO
REVISED BY	
DATE REVISED	

LAST REVISION 01-23-14
DATE PLOTTED => 29-MAY-2014
TIME PLOTTED => 08:45

BORDER LAST REVISED 7/2/2010 | USERNAME => s130875 DGN FILE => 0300020450ga097.dgn | RELATIVE BORDER SCALE IS IN INCHES 0 1 2 3 | UNIT 0327 | PROJECT NUMBER & PHASE 03000204501

NOTE:

1. EXISTING UTILITY FACILITIES HAVE NOT BEEN PLOTTED ON THESE PLANS.

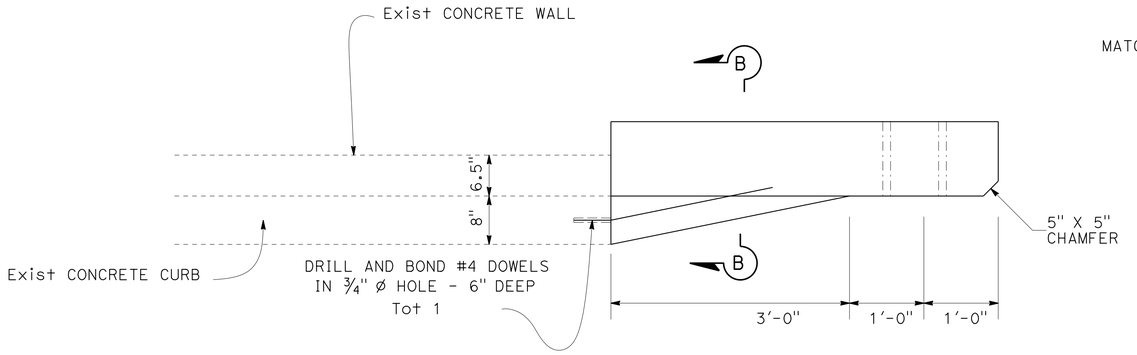

PLAN

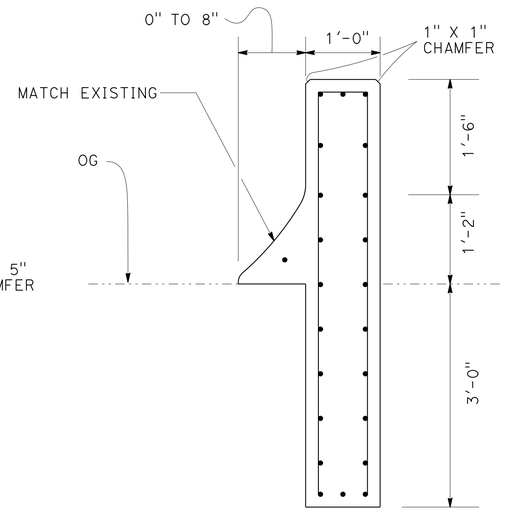

SECTION B-B

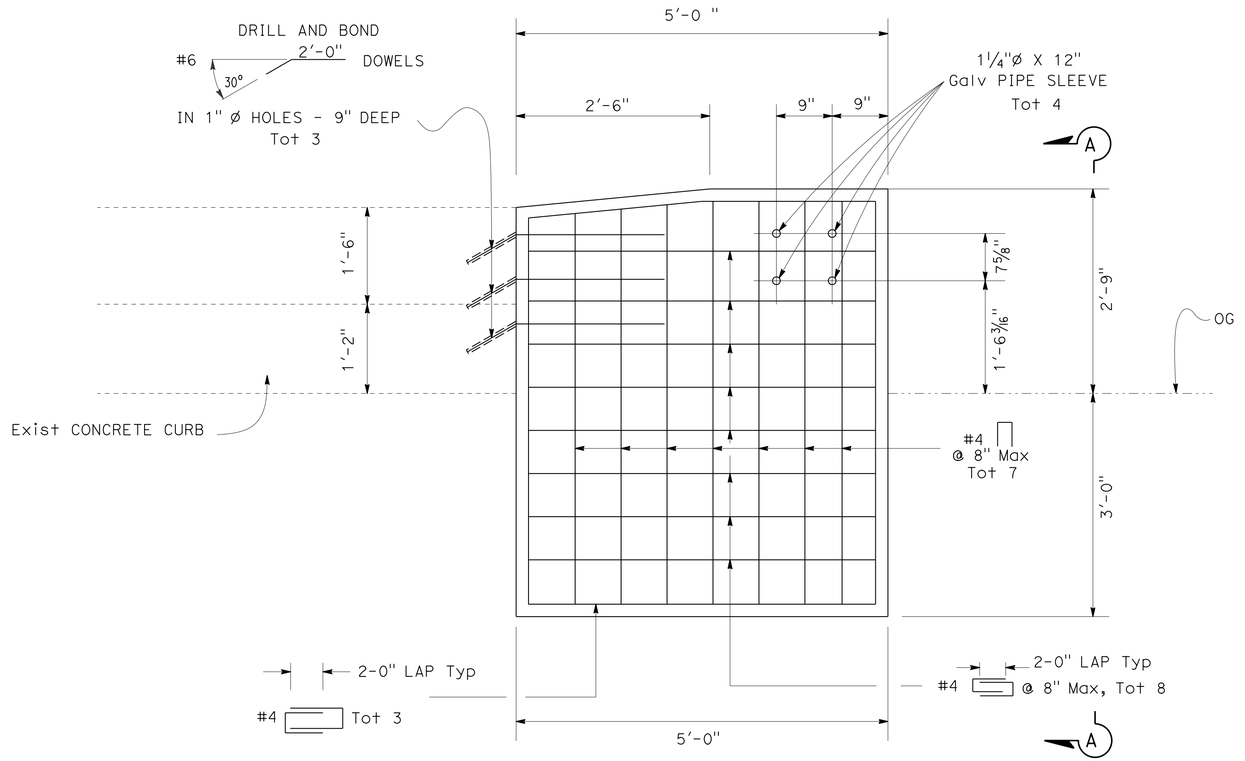

ELEVATION

SECTION A-A

CONCRETE END BLOCK DETAILS

ROUTE 16 (Yol)

LOCATIONS : 408, 410, 424, 427, 429

CONSTRUCTION DETAILS

NO SCALE

C-98

Dist	COUNTY	ROUTE	POST MILES TOTAL PROJECT	SHEET No.	TOTAL SHEETS
03	But,Col,Gln Sut,Yol,Yub	16,32,45 70,113,162	Var	115	195

Raimund Yambao 2-10-14
REGISTERED CIVIL ENGINEER DATE

2-10-14
PLANS APPROVAL DATE

REGISTERED PROFESSIONAL ENGINEER
RAIMUND J. YAMBAO
No. 80379
Exp. 03-31-15
CIVIL
STATE OF CALIFORNIA

THE STATE OF CALIFORNIA OR ITS OFFICERS OR AGENTS SHALL NOT BE RESPONSIBLE FOR THE ACCURACY OR COMPLETENESS OF SCANNED COPIES OF THIS PLAN SHEET.

CALCULATED-DESIGNED BY: GARY DEKENS
CHECKED BY: RAIMUND YAMBAO
REVISED BY
DATE REVISED
FUNCTIONAL SUPERVISOR: DEANN SPANGLER
STATE OF CALIFORNIA - DEPARTMENT OF TRANSPORTATION
DESIGN

LAST REVISION 01-23-14
DATE PLOTTED => 29-MAY-2014
TIME PLOTTED => 08:45

BORDER LAST REVISED 7/2/2010
USERNAME => s130875
DGN FILE => 0300020450ga098.dgn
RELATIVE BORDER SCALE IS IN INCHES 0 1 2 3
UNIT 0327
PROJECT NUMBER & PHASE 03000204501

NOTE:

1. EXISTING UTILITY FACILITIES HAVE NOT BEEN PLOTTED ON THESE PLANS.

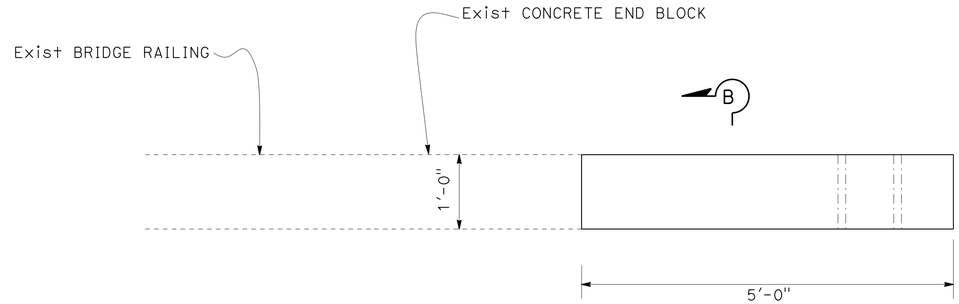

PLAN

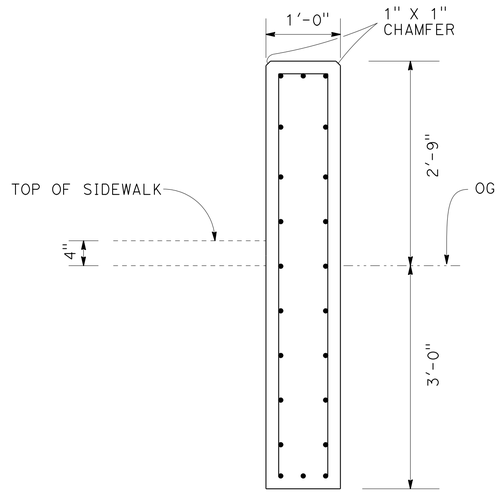

SECTION B-B

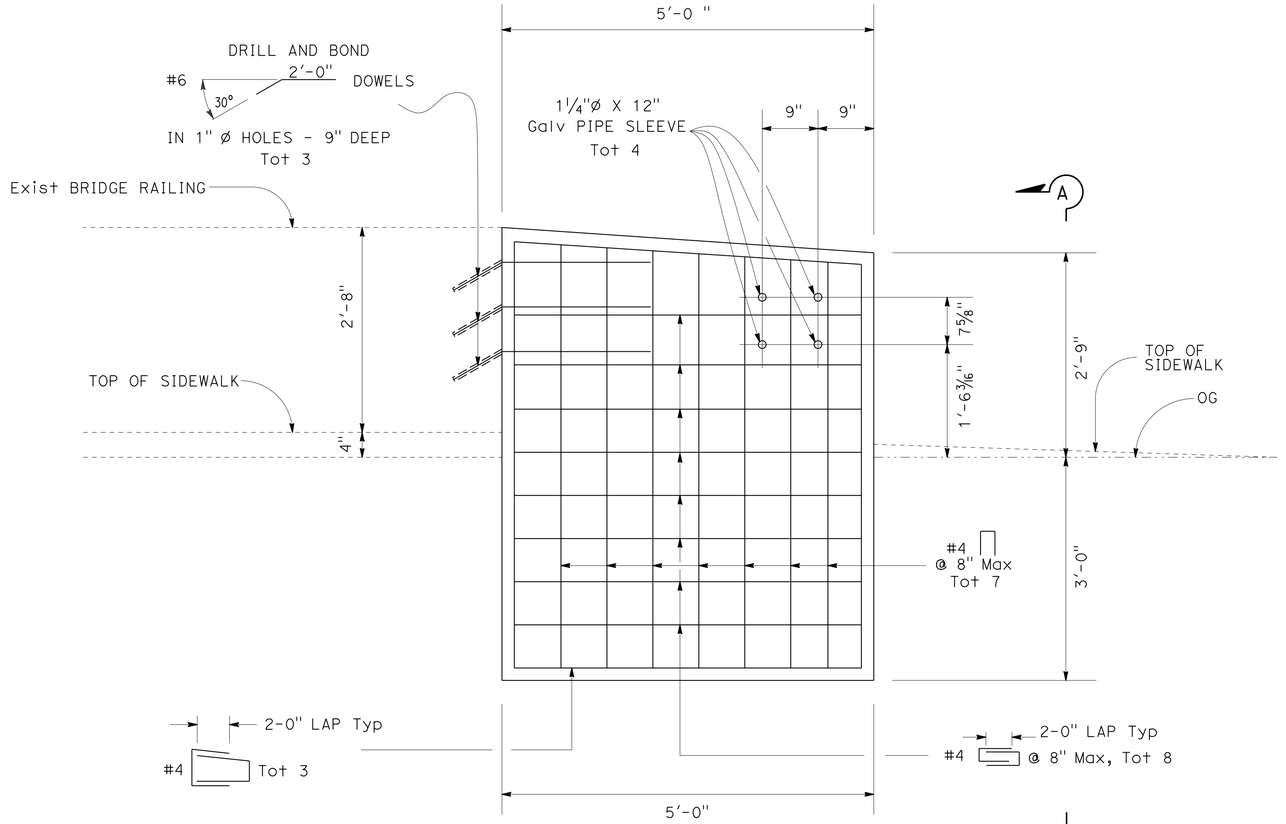

ELEVATION

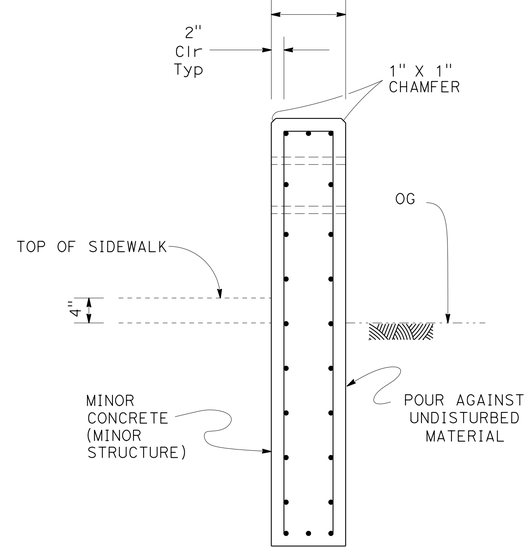

SECTION A-A

CONCRETE END BLOCK DETAILS

ROUTE (113)

LOCATIONS : 435

CONSTRUCTION DETAILS

NO SCALE

C-99

Dist	COUNTY	ROUTE	POST MILES TOTAL PROJECT	SHEET No.	TOTAL SHEETS
03	But,Col,Gln Sut,Yol,Yub	16,32,45 70,113,162	Var	116	195

Raimund Yambao 2-10-14
REGISTERED CIVIL ENGINEER DATE

2-10-14
PLANS APPROVAL DATE

REGISTERED PROFESSIONAL ENGINEER
RAIMUND J. YAMBAO
No. 80379
Exp. 03-31-15
CIVIL
STATE OF CALIFORNIA

THE STATE OF CALIFORNIA OR ITS OFFICERS OR AGENTS SHALL NOT BE RESPONSIBLE FOR THE ACCURACY OR COMPLETENESS OF SCANNED COPIES OF THIS PLAN SHEET.

REVISED BY	DATE REVISED

CALCULATED-DESIGNED BY: GARY DEKENS
CHECKED BY: RAIMUND YAMBAO
FUNCTIONAL SUPERVISOR: DEANN SPANGLER

STATE OF CALIFORNIA - DEPARTMENT OF TRANSPORTATION
DESIGN

LAST REVISION 01-23-14
DATE PLOTTED => 29-MAY-2014
TIME PLOTTED => 08:45

Dist	COUNTY	ROUTE	POST MILES TOTAL PROJECT	SHEET No.	TOTAL SHEETS
03	But,Col,Gln Sut,Yol,Yub	16,32,45 70,113,162	Var	117	195

Raimund Yambao 2-10-14
REGISTERED CIVIL ENGINEER DATE

2-10-14
PLANS APPROVAL DATE

REGISTERED PROFESSIONAL ENGINEER
RAIMUND J. YAMBAO
No. 80379
Exp. 03-31-15
CIVIL
STATE OF CALIFORNIA

THE STATE OF CALIFORNIA OR ITS OFFICERS OR AGENTS SHALL NOT BE RESPONSIBLE FOR THE ACCURACY OR COMPLETENESS OF SCANNED COPIES OF THIS PLAN SHEET.

NOTE:

1. EXISTING UTILITY FACILITIES HAVE NOT BEEN PLOTTED ON THESE PLANS.

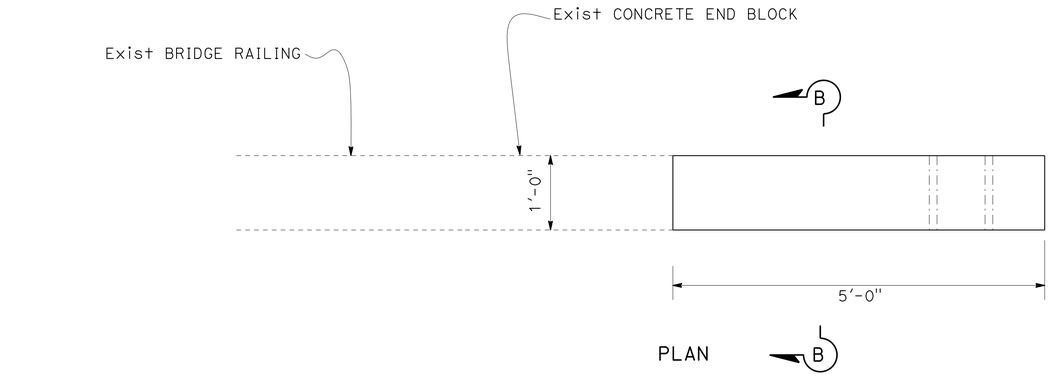

PLAN B

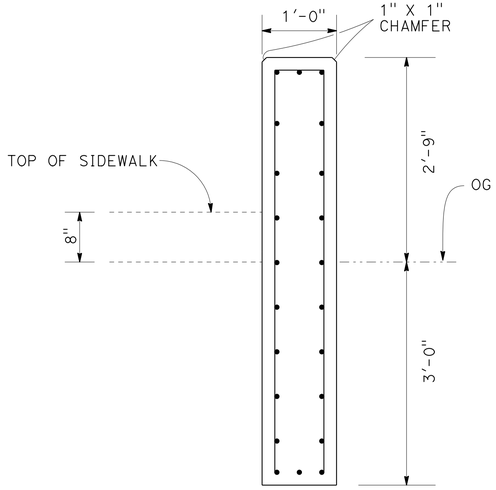

SECTION B-B

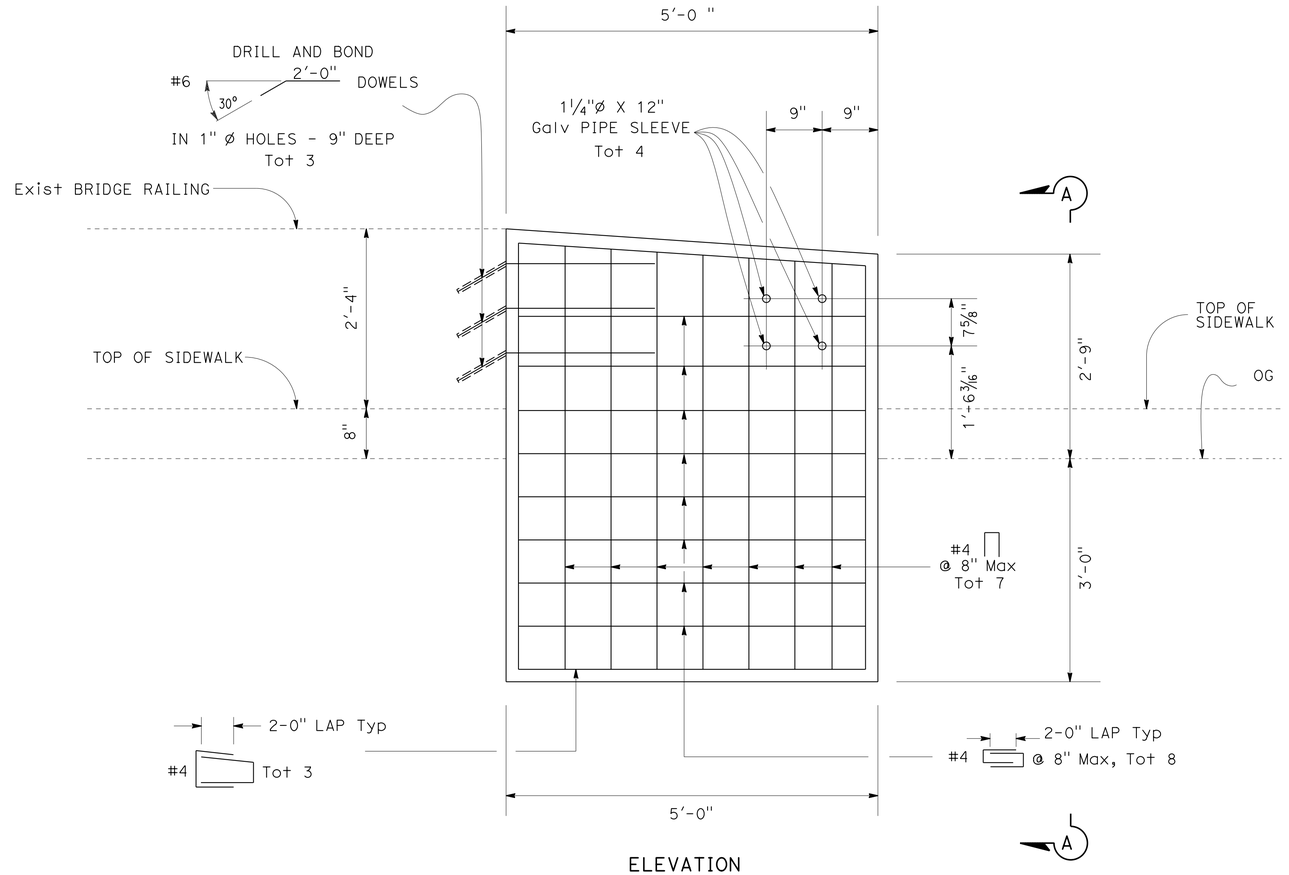

ELEVATION

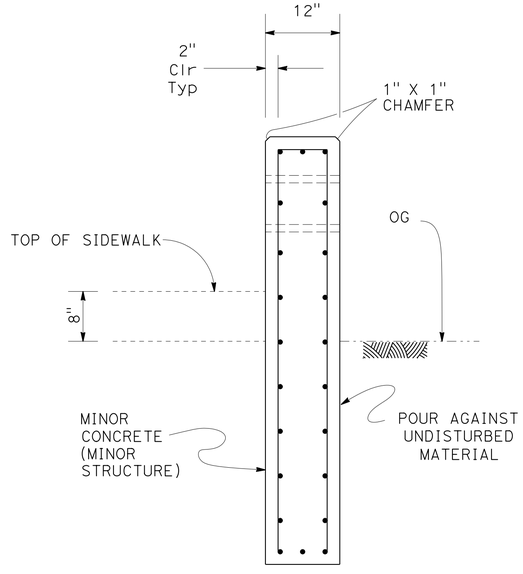

SECTION A-A

CONCRETE END BLOCK DETAILS

ROUTE (113)

LOCATIONS : 436, 443

CONSTRUCTION DETAILS

NO SCALE

C-100

REVISED BY	DATE REVISED

CALCULATED-DESIGNED BY: GARY DEKENS
CHECKED BY: RAIMUND YAMBAO
FUNCTIONAL SUPERVISOR: DEANN SPANGLER
STATE OF CALIFORNIA - DEPARTMENT OF TRANSPORTATION
DESIGN

LAST REVISION 01-23-14
DATE PLOTTED => 29-MAY-2014
TIME PLOTTED => 08:45

BORDER LAST REVISED 7/2/2010 | USERNAME => s130875 | DGN FILE => 0300020450ga100.dgn | RELATIVE BORDER SCALE IS IN INCHES 0 1 2 3 | UNIT 0327 | PROJECT NUMBER & PHASE 03000204501

NOTE:

1. EXISTING UTILITY FACILITIES HAVE NOT BEEN PLOTTED ON THESE PLANS.

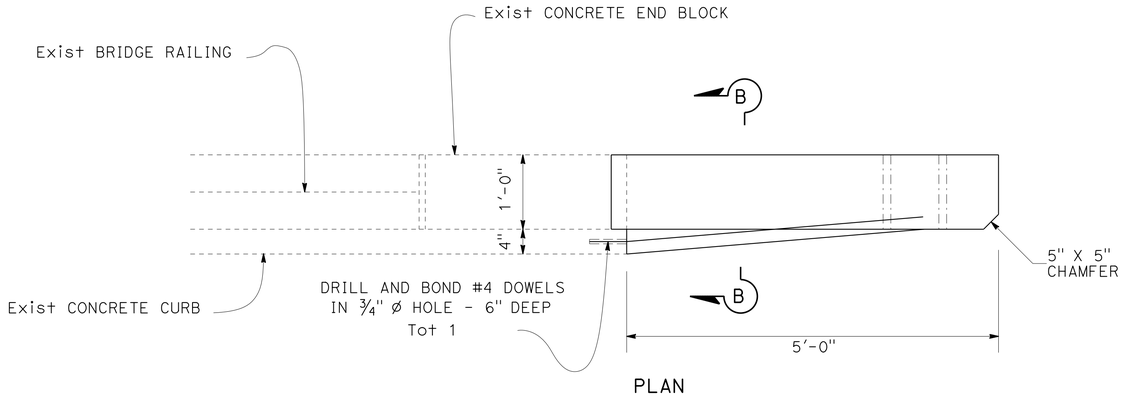

PLAN

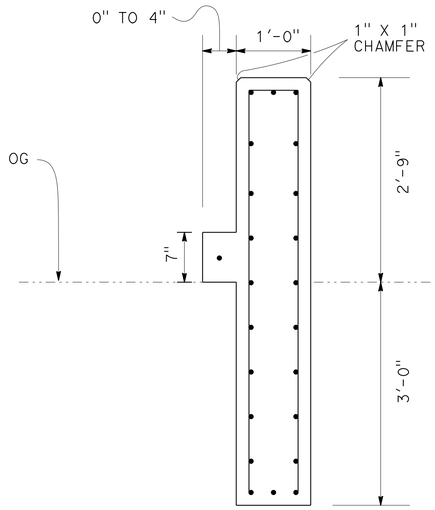

SECTION B-B

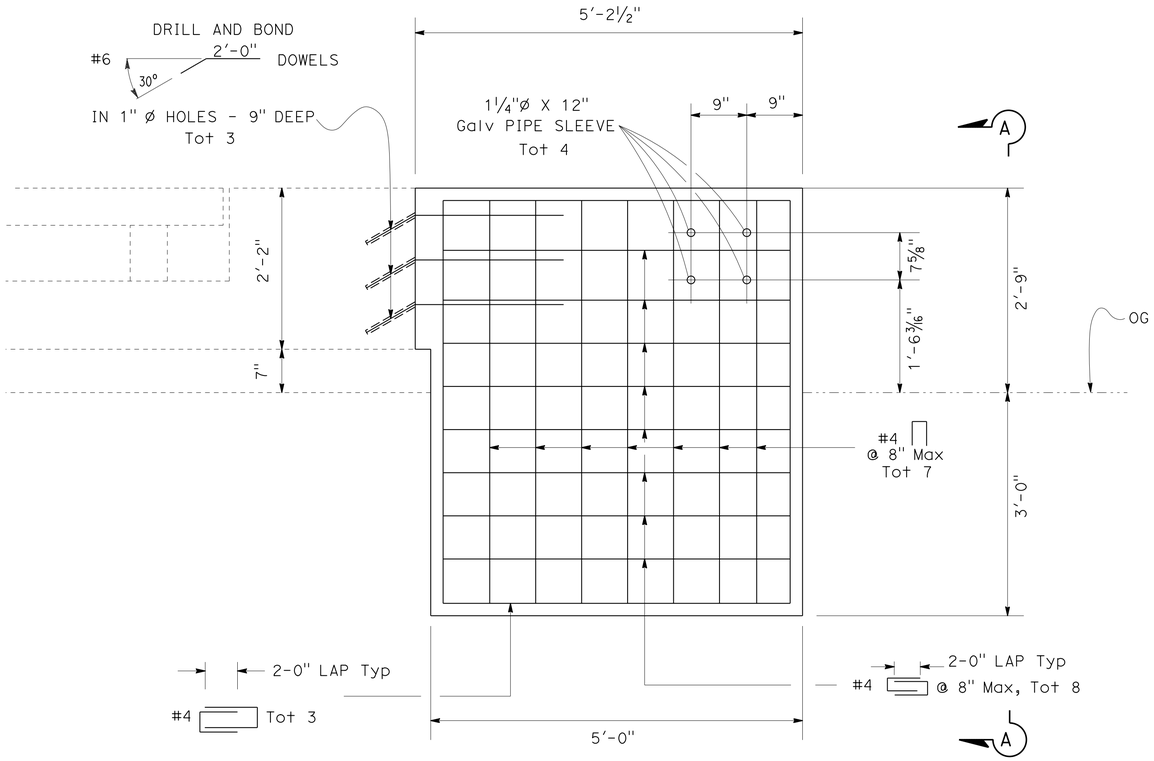

ELEVATION

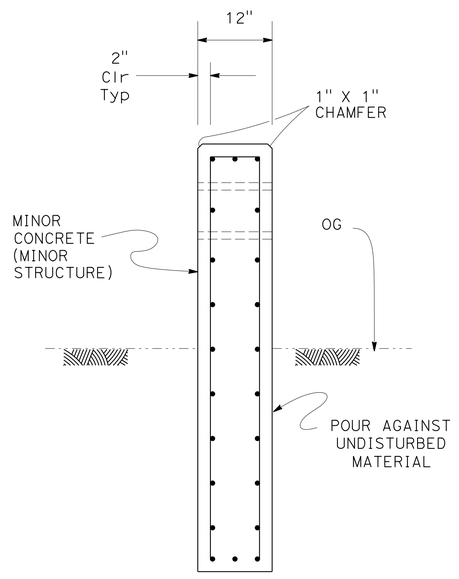

SECTION A-A

CONCRETE END BLOCK DETAILS

VARIOUS ROUTES

LOCATIONS: 442

CONSTRUCTION DETAILS

NO SCALE

C-101

Dist	COUNTY	ROUTE	POST MILES TOTAL PROJECT	SHEET No.	TOTAL SHEETS
03	But,Col,Gln Sut,Yol,Yub	16,32,45 70,113,162	Var	118	195

Raimund Yambao 2-10-14
REGISTERED CIVIL ENGINEER DATE

2-10-14
PLANS APPROVAL DATE

REGISTERED PROFESSIONAL ENGINEER
RAIMUND J. YAMBAO
No. 80379
Exp. 03-31-15
CIVIL
STATE OF CALIFORNIA

THE STATE OF CALIFORNIA OR ITS OFFICERS OR AGENTS SHALL NOT BE RESPONSIBLE FOR THE ACCURACY OR COMPLETENESS OF SCANNED COPIES OF THIS PLAN SHEET.

CALCULATED-DESIGNED BY: GARY DEKENS
CHECKED BY: RAIMUND YAMBAO
REVISED BY
DATE REVISED
FUNCTIONAL SUPERVISOR: DEANN SPANGLER
STATE OF CALIFORNIA - DEPARTMENT OF TRANSPORTATION
Caltrans® DESIGN

LAST REVISION 01-23-14
DATE PLOTTED => 29-MAY-2014
TIME PLOTTED => 08:45

Dist	COUNTY	ROUTE	POST MILES TOTAL PROJECT	SHEET No.	TOTAL SHEETS
03	But,Col,Gln Sut,Yol,Yub	16,32,45 70,113,162	Var	119	195

Raimund Yambao 2-10-14
REGISTERED CIVIL ENGINEER DATE

2-10-14
PLANS APPROVAL DATE

REGISTERED PROFESSIONAL ENGINEER
RAIMUND J. YAMBAO
No. 80379
Exp. 03-31-15
CIVIL
STATE OF CALIFORNIA

THE STATE OF CALIFORNIA OR ITS OFFICERS OR AGENTS SHALL NOT BE RESPONSIBLE FOR THE ACCURACY OR COMPLETENESS OF SCANNED COPIES OF THIS PLAN SHEET.

NOTE:

1. EXISTING UTILITY FACILITIES HAVE NOT BEEN PLOTTED ON THESE PLANS.

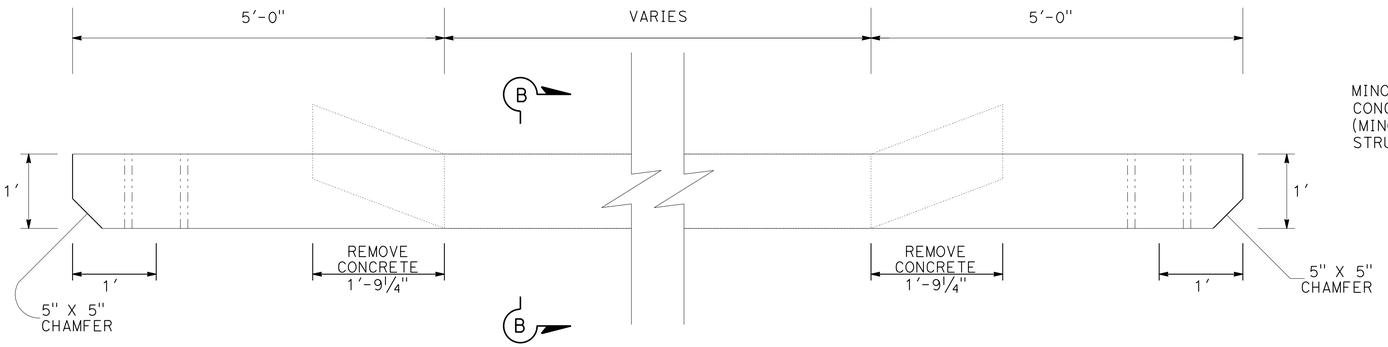

PLAN

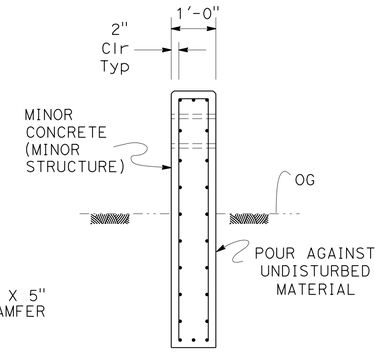

VIEW A-A

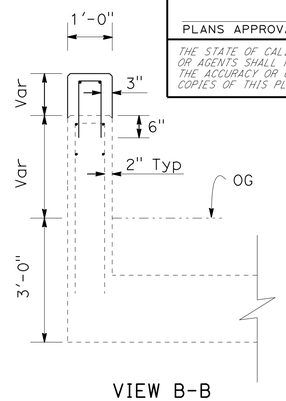

VIEW B-B

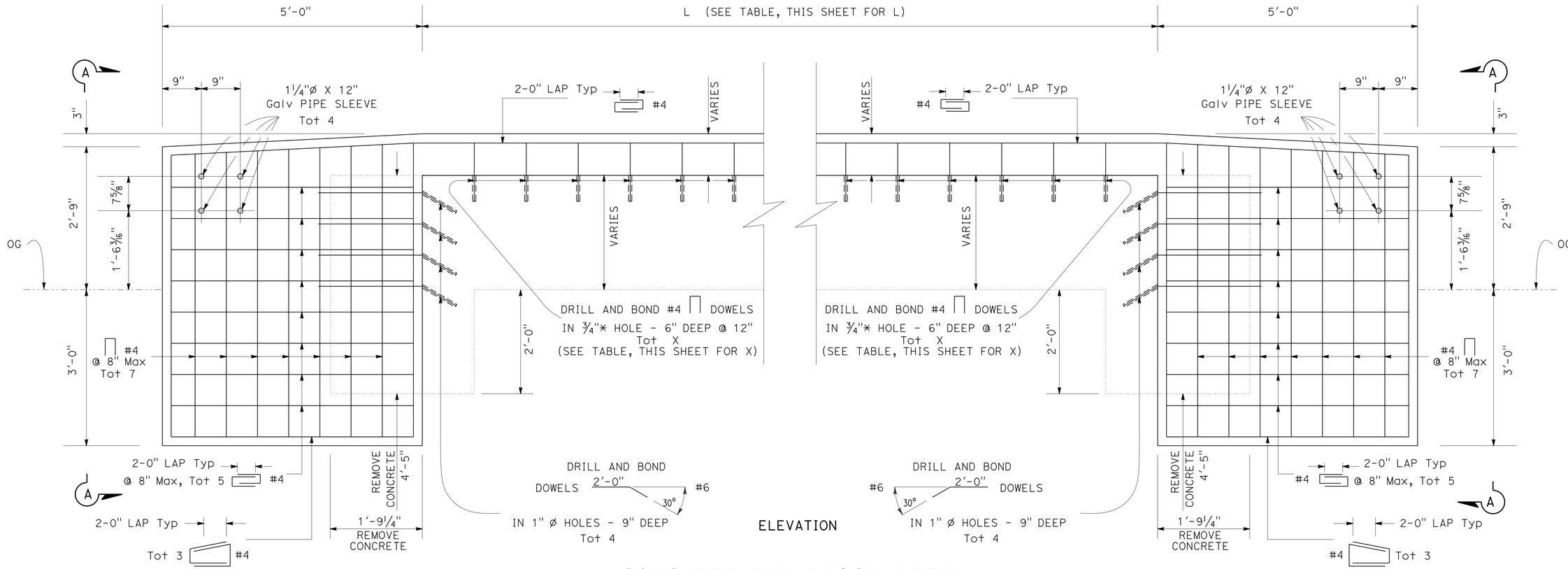

LOCATION	L	X
400	39.5	78
418	45.5	90
403	32.5	64
421	39.5	78

CONCRETE END BLOCK DETAIL

ROUTE 16

LOCATIONS : 400, 418, 403, 421

CONSTRUCTION DETAILS

NO SCALE

C-102

STATE OF CALIFORNIA - DEPARTMENT OF TRANSPORTATION
Caltrans®
DESIGN

FUNCTIONAL SUPERVISOR: DEANN SPANGLER
CALCULATED-DESIGNED BY: GARY DEKENS
CHECKED BY: RAIMUND YAMBAO
REVISED BY
DATE REVISED

LAST REVISION 01-24-14
DATE PLOTTED => 29-MAY-2014
TIME PLOTTED => 08:45

BORDER LAST REVISED 7/2/2010
USERNAME => s130875
DGN FILE => 0300020450ga102.dgn
RELATIVE BORDER SCALE IS IN INCHES 0 1 2 3
UNIT 0327
PROJECT NUMBER & PHASE 03000204501

Dist	COUNTY	ROUTE	POST MILES TOTAL PROJECT	SHEET No.	TOTAL SHEETS
03	But,Col,Gln Sut,Yol,Yub	16,32,45 70,113,162	Var	120	195

REGISTERED CIVIL ENGINEER 2-10-14 DATE

PLANS APPROVAL DATE 2-10-14

REGISTERED PROFESSIONAL ENGINEER ERIC NORMAN SOUZA No. 75706 Exp. 06-30-14 CIVIL STATE OF CALIFORNIA

THE STATE OF CALIFORNIA OR ITS OFFICERS OR AGENTS SHALL NOT BE RESPONSIBLE FOR THE ACCURACY OR COMPLETENESS OF SCANNED COPIES OF THIS PLAN SHEET.

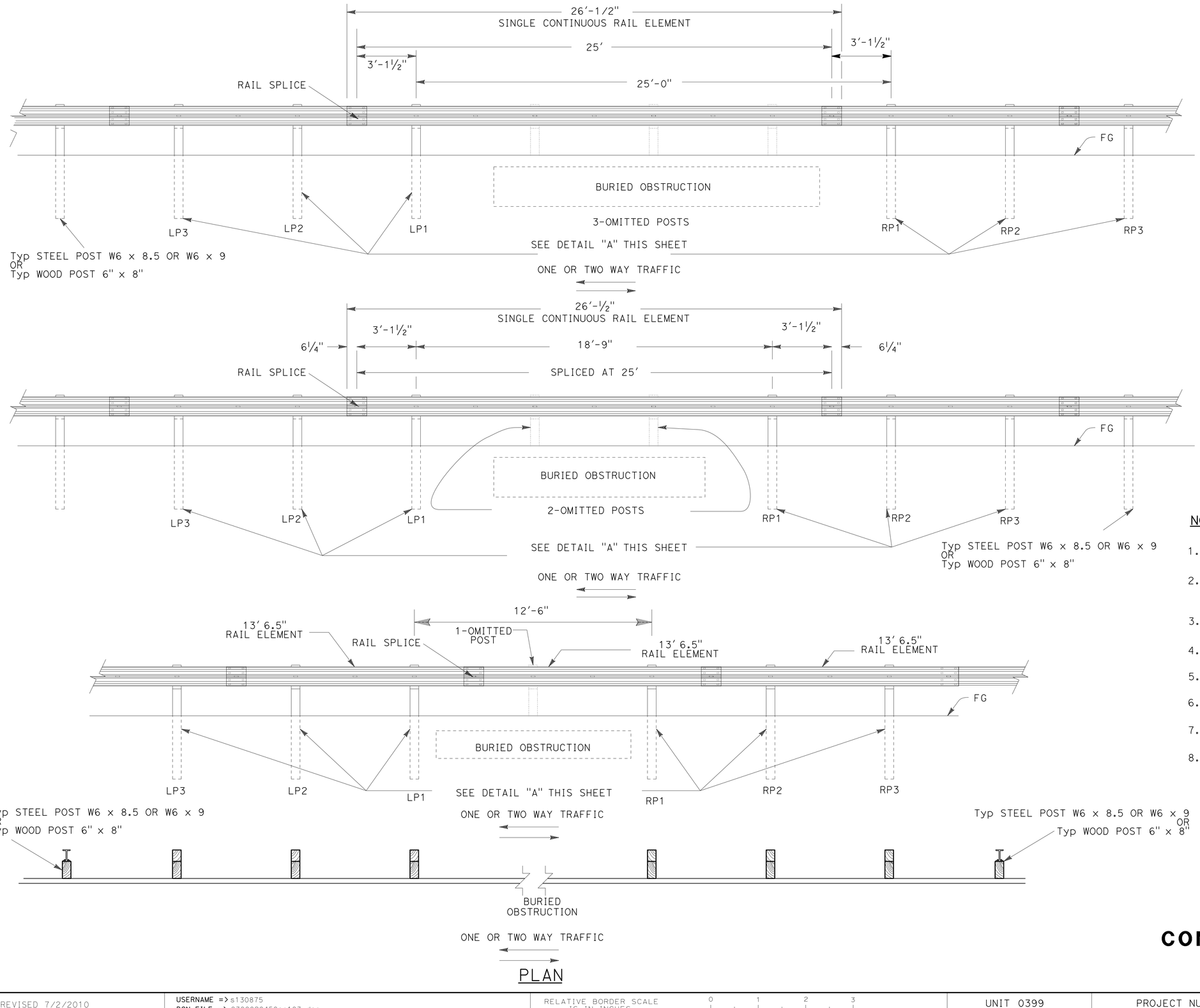

PLAN

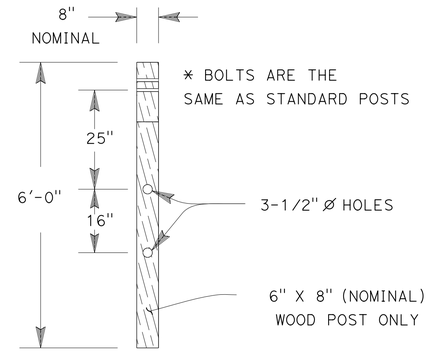

DETAIL "A" (LP/RP)

NOTES:

1. ALL RAIL ELEMENTS ARE MIDWEST GUARADRAIL SYSTEM
2. FOR DETAILS OF STANDARD HARDWARE USED TO CONSTRUCT MGS, SEE REVISED STANDARD PLAN A77M1
3. FOR DETAILS OF RAIL ELEMENT SPLICE, SEE RSP A77L1
4. MGS POST SPACINGS TO BE 6'-3" CENTER TO CENTER, EXCEPT OTHERWISE NOTED
5. WHERE PLACEMENT OF DIKE IS REQUIRED, SEE RSP A77N4
6. FOR PLACEMENT OF VEGETATION CONTROL SEE RSP A77N5
7. CRT POST TO BE WOOD ONLY SEE RSP A77N5
8. SEE STANDRAD PLAN RSP A77N5 AND RSP A87B FOR DIKE TYPE AND PLACEMENT LOCATION

CONSTRUCTION DETAILS

NO SCALE

C-103

STATE OF CALIFORNIA - DEPARTMENT OF TRANSPORTATION

Caltrans

TRAFFIC

FUNCTIONAL SUPERVISOR: STEPHEN WRIGHT

CALCULATED-DESIGNED BY: DAVID ROBERTS

CHECKED BY: ERIC SOUZA

REVISED BY

DATE REVISED

LAST REVISION 00-00-00

DATE PLOTTED => 29-MAY-2014

TIME PLOTTED => 08:45

Dist	COUNTY	ROUTE	POST MILES TOTAL PROJECT	SHEET No.	TOTAL SHEETS
03	But,Col,Gln Sut,Yol,Yub	16,32,45 70,113,162	Var	121	195

2-10-14
REGISTERED CIVIL ENGINEER DATE

2-10-14
PLANS APPROVAL DATE

REGISTERED PROFESSIONAL ENGINEER
ERIC NORMAN SOUZA
No. 75706
Exp. 06-30-14
CIVIL
STATE OF CALIFORNIA

THE STATE OF CALIFORNIA OR ITS OFFICERS OR AGENTS SHALL NOT BE RESPONSIBLE FOR THE ACCURACY OR COMPLETENESS OF SCANNED COPIES OF THIS PLAIN SHEET.

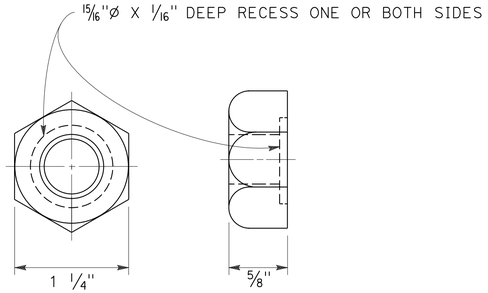

5/8" RECESS NUT

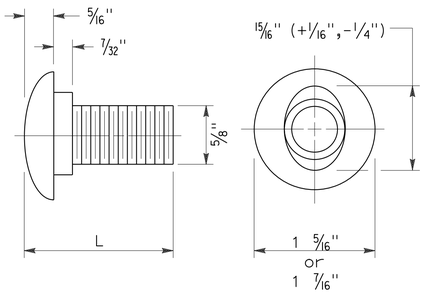

5/8"ø BUTTON HEAD BOLT

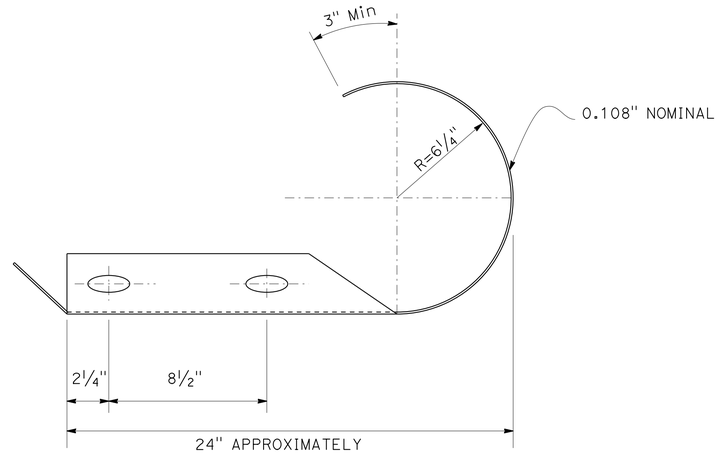

L	THREAD LENGTH
1 3/8"	FULL THREAD LENGTH
2"	FULL THREAD LENGTH

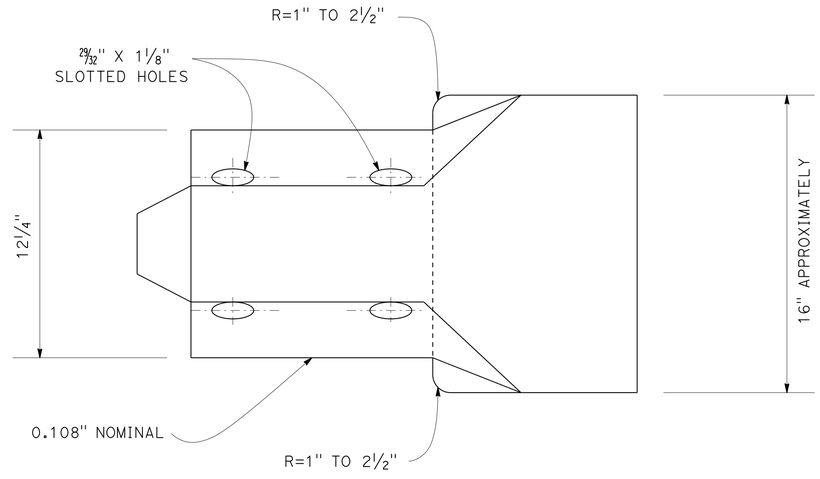

END CAP (3/4 WRAP END SECTION) DETAILS

CONSTRUCTION DETAILS

NO SCALE

C-104

STATE OF CALIFORNIA - DEPARTMENT OF TRANSPORTATION
Caltrans
TRAFFIC

FUNCTIONAL SUPERVISOR: STEPHEN WRIGHT
CALCULATED-DESIGNED BY:
CHECKED BY:
REVISED BY:
DATE REVISED:
A.G. CHIN
ERIC SOUZA

LAST REVISION 11-13-13
DATE PLOTTED => 29-MAY-2014
TIME PLOTTED => 08:45

Dist	COUNTY	ROUTE	POST MILES TOTAL PROJECT	SHEET No.	TOTAL SHEETS
03	But,Col,Gln Sut,Yol,Yub	16,32,45 70,113,162	Var	122	195

Raimund Yambao 2-10-14
REGISTERED CIVIL ENGINEER DATE

2-10-14
PLANS APPROVAL DATE

REGISTERED PROFESSIONAL ENGINEER
RAIMUND J. YAMBAO
No. 80379
Exp. 03-31-15
CIVIL
STATE OF CALIFORNIA

THE STATE OF CALIFORNIA OR ITS OFFICERS OR AGENTS SHALL NOT BE RESPONSIBLE FOR THE ACCURACY OR COMPLETENESS OF SCANNED COPIES OF THIS PLAN SHEET.

NOTE:

1. EXISTING UTILITY FACILITIES HAVE NOT BEEN PLOTTED ON THESE PLANS.
2. ADJUST MGS POST LOCATION TO AVOID CONTACTING EXISTING TIE BACK ANCHOR, AS DIRECTED BY THE ENGINEER.

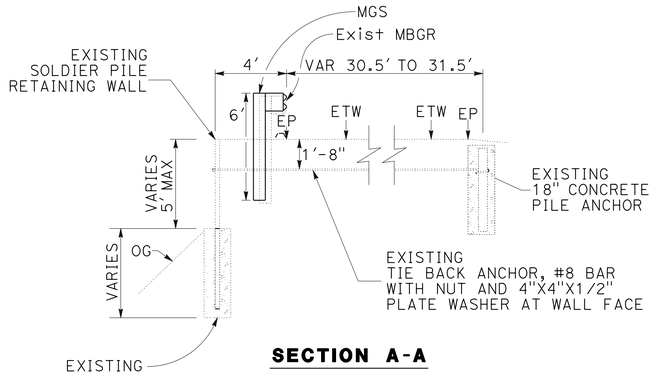

SECTION A-A

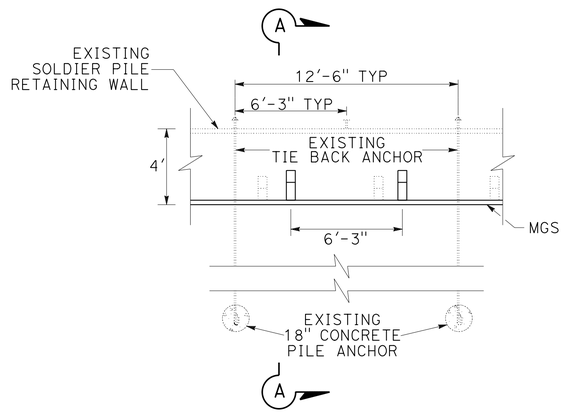

PLAN

LOCATION 388

YOL 16 PM 1.54 TO 1.68

CONSTRUCTION DETAILS

NO SCALE

C-105

LAST REVISION 01-21-14
DATE PLOTTED => 29-MAY-2014
TIME PLOTTED => 08:45

STATE OF CALIFORNIA - DEPARTMENT OF TRANSPORTATION
Caltrans® DESIGN

FUNCTIONAL SUPERVISOR: DEANN SPANGLER

CALCULATED-DESIGNED BY: GARY DEKENS
CHECKED BY: RAIMUND YAMBAO

REVISED BY | DATE REVISED

BORDER LAST REVISED 7/2/2010

USERNAME => s130875
DGN FILE => 0300020450ga105.dgn

RELATIVE BORDER SCALE IS IN INCHES 0 1 2 3

UNIT 0327

PROJECT NUMBER & PHASE 03000204501

Dist	COUNTY	ROUTE	POST MILES TOTAL PROJECT	SHEET No.	TOTAL SHEETS
03	But,Col,Gln Sut,Yol,Yub	16,32,45 70,113,162	Var	123	195

Stephen T. Wright 2-10-14
REGISTERED CIVIL ENGINEER DATE

2-10-14
PLANS APPROVAL DATE

REGISTERED PROFESSIONAL ENGINEER — STEPHEN T. WRIGHT — No. 52942 — Exp. 12-31-14 — CIVIL — STATE OF CALIFORNIA

THE STATE OF CALIFORNIA OR ITS OFFICERS OR AGENTS SHALL NOT BE RESPONSIBLE FOR THE ACCURACY OR COMPLETENESS OF SCANNED COPIES OF THIS PLAN SHEET.

LEGEND

ROCK SLOPE PROTECTION (No. 2, METHOD B)

MINOR HMA

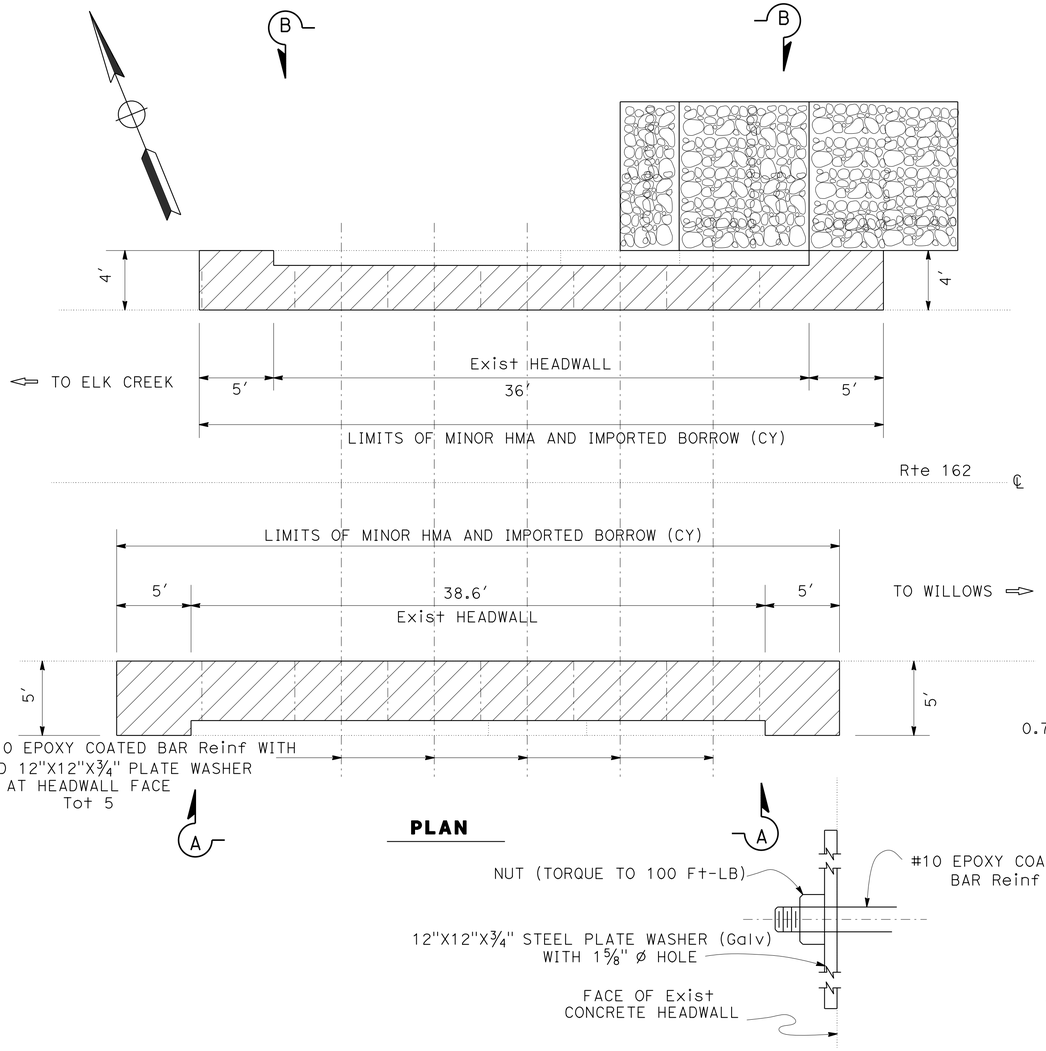

PLAN

PLATE WASHER DETAIL

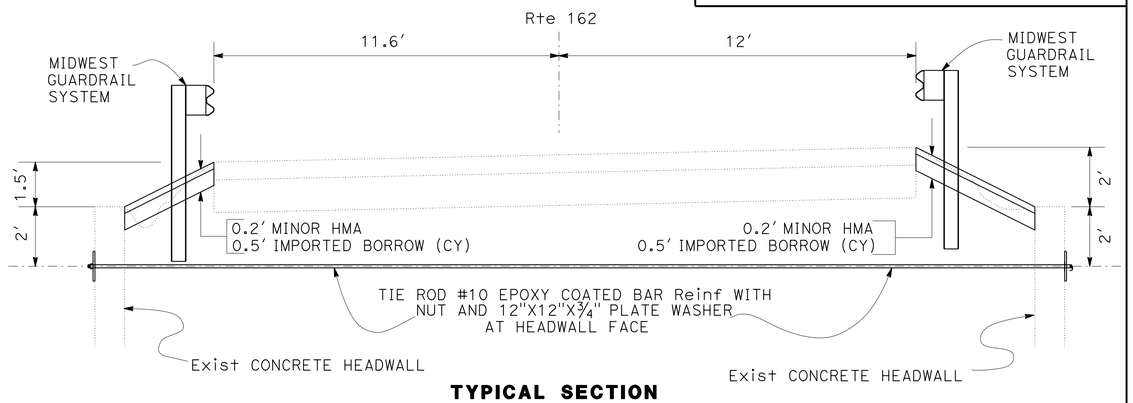

TYPICAL SECTION

NOTE: TIE RODS TO BE PLACED 90° TO HEADWALL FACE

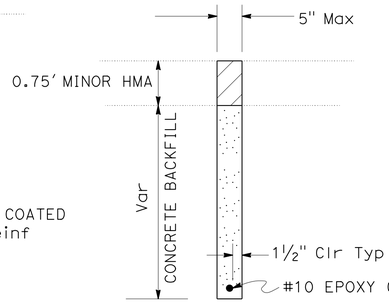

TIE ROD TRENCH DETAIL

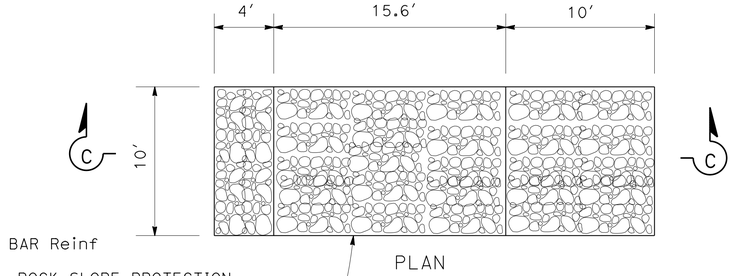

PLAN

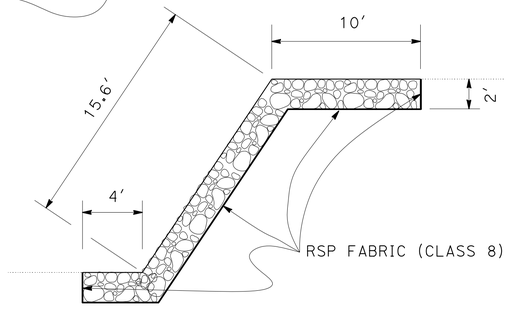

SECTION C-C

ROCK SLOPE PROTECTION DETAIL

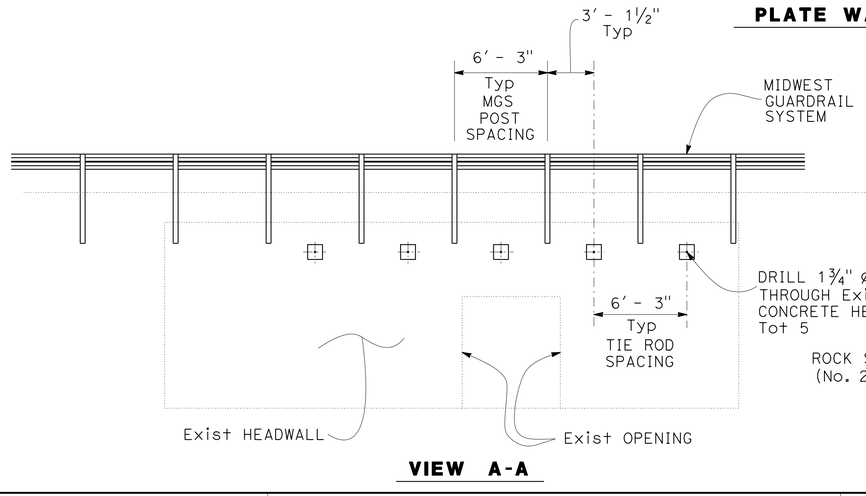

VIEW A-A

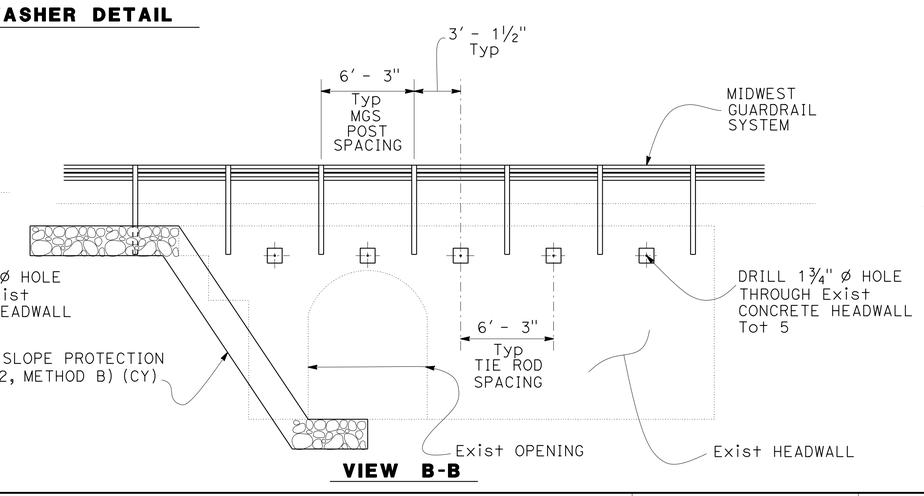

VIEW B-B

CONSTRUCTION DETAIL

ROUTE 162 (Gle) PM 49.93 TO 49.95
LOCATION 282 AND 336
NO SCALE

C-106

STATE OF CALIFORNIA - DEPARTMENT OF TRANSPORTATION
TRAFFIC
Caltrans®
FUNCTIONAL SUPERVISOR: STEPHEN WRIGHT
CALCULATED-DESIGNED BY: A. G. CHIN
CHECKED BY: STEPHEN WRIGHT
REVISED BY
DATE REVISED

LAST REVISION: DATE PLOTTED => 29-MAY-2014
10-31-13 TIME PLOTTED => 08:45

BORDER LAST REVISED 7/2/2010 | USERNAME => s130875 | DGN FILE => 0300020450ga106.dgn | RELATIVE BORDER SCALE IS IN INCHES 0 1 2 3 | UNIT 0399 | PROJECT NUMBER & PHASE 03000204501

NOTE:

1. EXISTING UTILITY FACILITIES HAVE NOT BEEN PLOTTED ON THESE PLANS.

Dist	COUNTY	ROUTE	POST MILES TOTAL PROJECT	SHEET No.	TOTAL SHEETS
03	But,Col,Gln Sut,Yol,Yub	16,32,45 70,113,162	Var	124	195

Raimund Yambao 2-10-14
REGISTERED CIVIL ENGINEER DATE

2-10-14
PLANS APPROVAL DATE

REGISTERED PROFESSIONAL ENGINEER
RAIMUND J. YAMBAO
No. 80379
Exp. 03-31-15
CIVIL
STATE OF CALIFORNIA

THE STATE OF CALIFORNIA OR ITS OFFICERS OR AGENTS SHALL NOT BE RESPONSIBLE FOR THE ACCURACY OR COMPLETENESS OF SCANNED COPIES OF THIS PLAN SHEET.

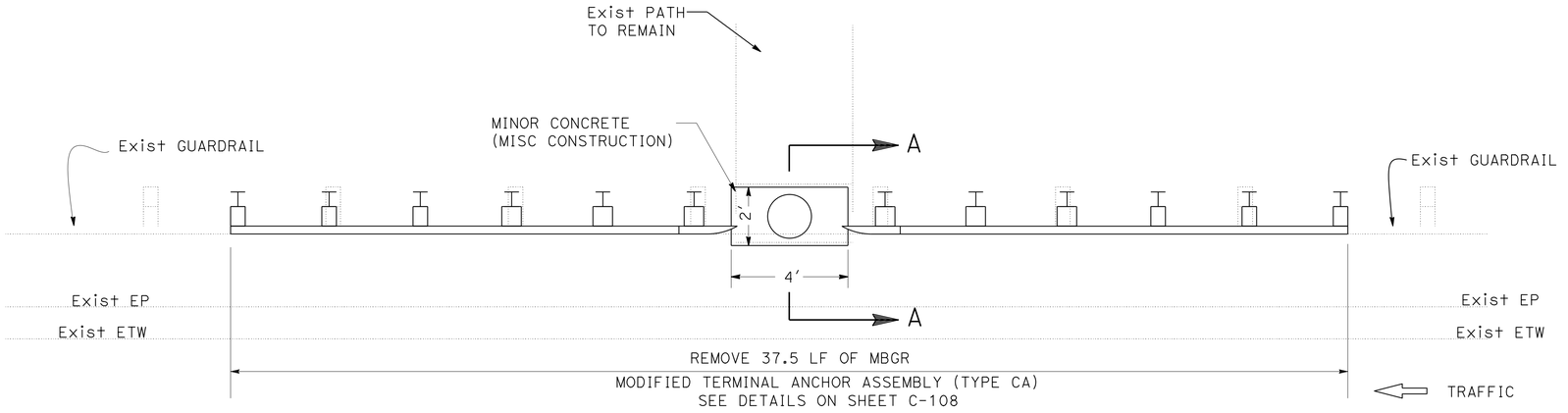

MODIFIED TERMINAL ANCHOR ASSEMBLY (TYPE CA) AT LOCATION 259/260 AND 269/270

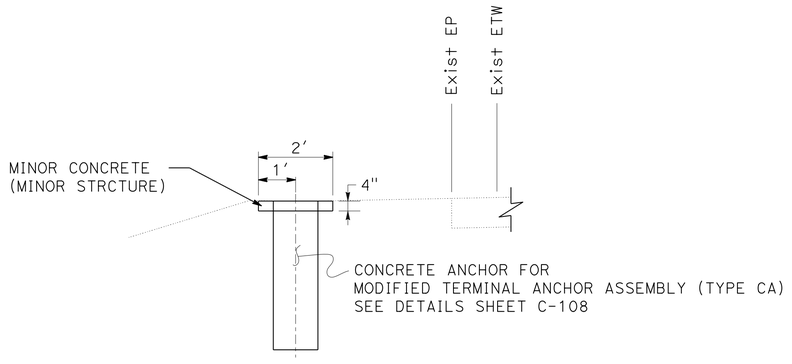

SECTION A-A

CONSTRUCTION DETAILS

NO SCALE

C-107

LAST REVISION 01-27-14
DATE PLOTTED => 29-MAY-2014
TIME PLOTTED => 08:45

STATE OF CALIFORNIA - DEPARTMENT OF TRANSPORTATION
DESIGN
FUNCTIONAL SUPERVISOR: DEANN SPANGLER
CALCULATED-DESIGNED BY: GARY DEKENS
CHECKED BY: RAIMUND YAMBAO
REVISED BY
DATE REVISED

NOTE

1. FOR DETAILS NOT SHOWN, SEE RSP A77T1
2. ALL ANCHOR CABLES, RODS AND ATTACHMENT PARTS ARE IDENTICAL.
3. LAP RAIL IN DIRECTION OF TRAFFIC
4. EXISTING UTILITY FACILITIES HAVE NOT BEEN PLOTTED ON THESE PLANS.

Dist	COUNTY	ROUTE	POST MILES TOTAL PROJECT	SHEET No.	TOTAL SHEETS
03	But,Col,Gln Sut,Yol,Yub	16,32,45 70,113,162	Var	125	195

Raimund Yambao 2-10-14
REGISTERED CIVIL ENGINEER DATE

2-10-14
PLANS APPROVAL DATE

REGISTERED PROFESSIONAL ENGINEER — RAIMUND J. YAMBAO No. 80379 Exp. 03-31-15 CIVIL — STATE OF CALIFORNIA

THE STATE OF CALIFORNIA OR ITS OFFICERS OR AGENTS SHALL NOT BE RESPONSIBLE FOR THE ACCURACY OR COMPLETENESS OF SCANNED COPIES OF THIS PLAN SHEET.

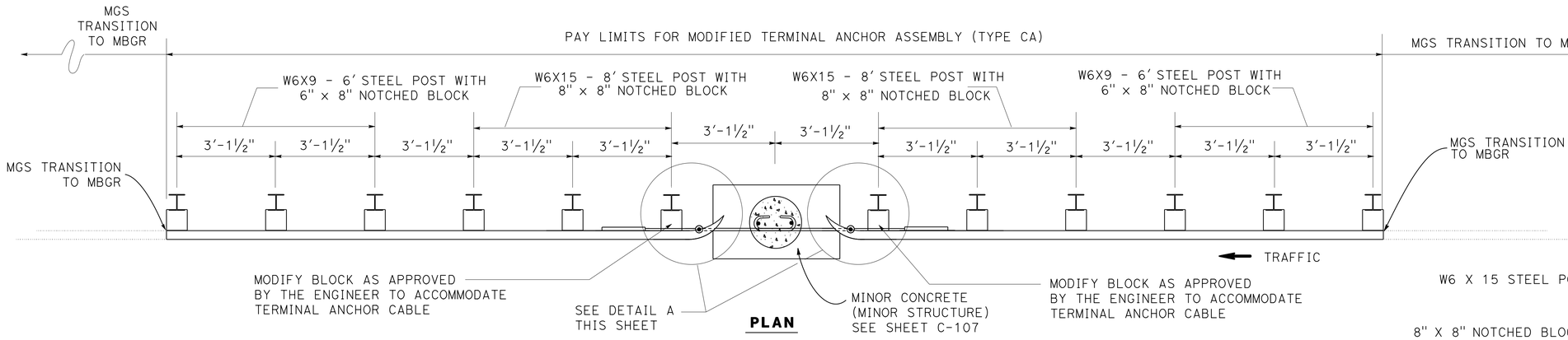

PLAN

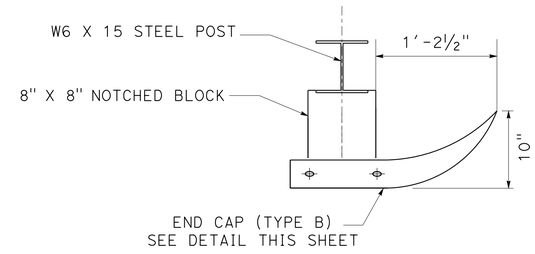

DETAIL A

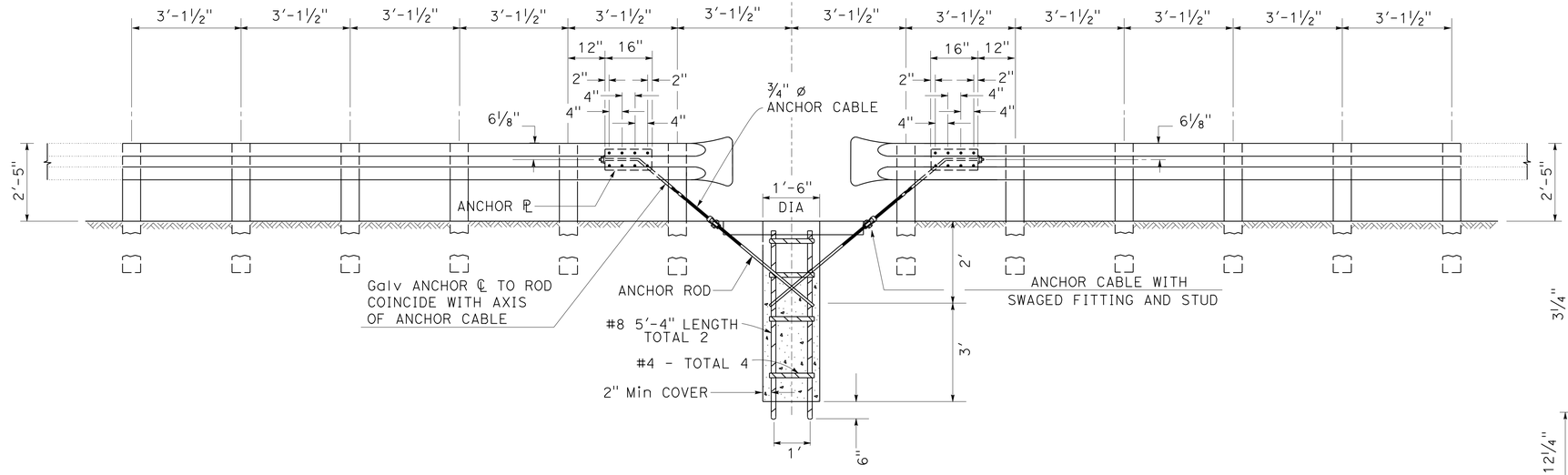

ELEVATION

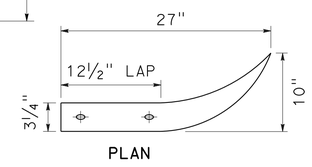

PLAN

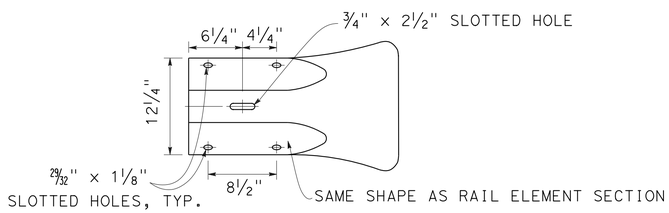

ELEVATION

END CAP (TYPE B)

MODIFIED TERMINAL ANCHOR ASSEMBLY (TYPE CA)
LOCATION 259/260 AND 269/270

CONSTRUCTION DETAILS

NO SCALE

C-108

STATE OF CALIFORNIA - DEPARTMENT OF TRANSPORTATION
Caltrans® DESIGN
FUNCTIONAL SUPERVISOR: DEANN SPANGLER
CALCULATED-DESIGNED BY: RAIMUND YAMBAO
CHECKED BY: GARY DEKENS
REVISED BY | DATE REVISED

LAST REVISION 01-27-14 | DATE PLOTTED => 29-MAY-2014 | TIME PLOTTED => 08:45

BORDER LAST REVISED 7/2/2010 | USERNAME => s130875 | DGN FILE => 0300020450ga108.dgn | RELATIVE BORDER SCALE IS IN INCHES 0 1 2 3 | UNIT 0327 | PROJECT NUMBER & PHASE 03000204501

Dist	COUNTY	ROUTE	POST MILES TOTAL PROJECT	SHEET No.	TOTAL SHEETS
03	But,Col,Gln Sut,Yol,Yub	16,32,45 70,113,162	Var	126	195

REGISTERED CIVIL ENGINEER — DATE 2-10-14

PLANS APPROVAL DATE 2-10-14

REGISTERED PROFESSIONAL ENGINEER — ERIC NORMAN SOUZA No. 75706 Exp. 06-30-14 CIVIL — STATE OF CALIFORNIA

THE STATE OF CALIFORNIA OR ITS OFFICERS OR AGENTS SHALL NOT BE RESPONSIBLE FOR THE ACCURACY OR COMPLETENESS OF SCANNED COPIES OF THIS PLAIN SHEET.

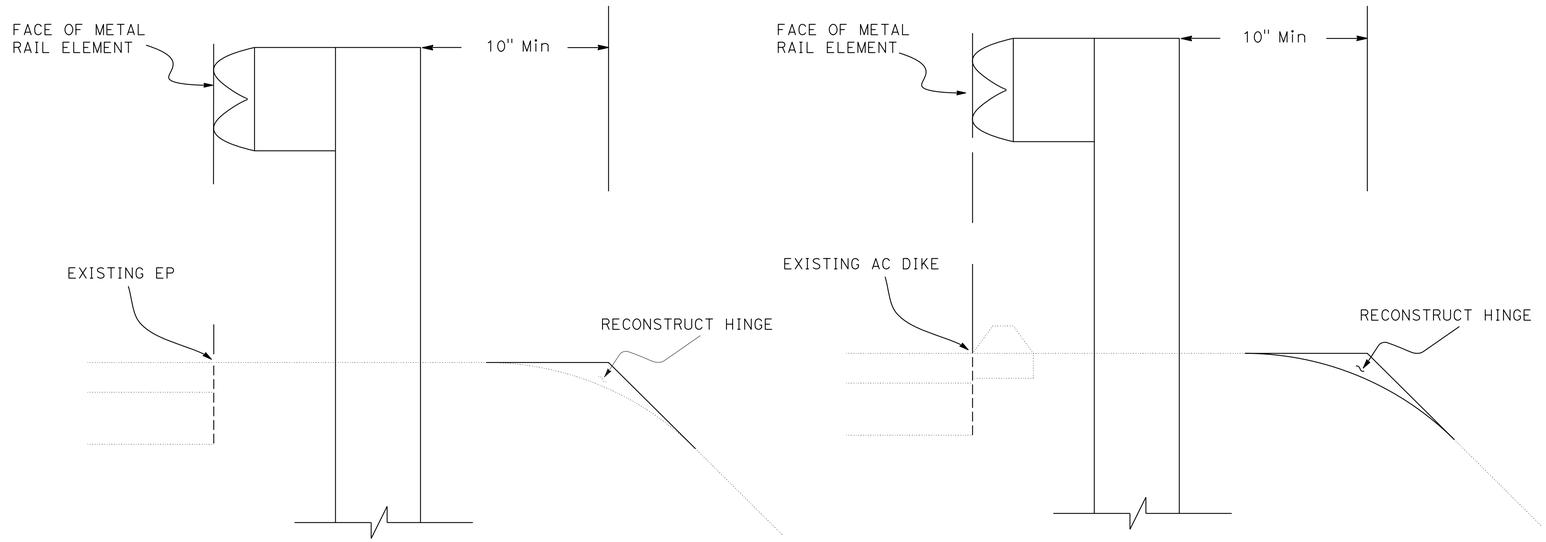

TYPICAL MGS PLACEMENT DETAILS
NARROW ROADWAY INSTALLATION ONLY

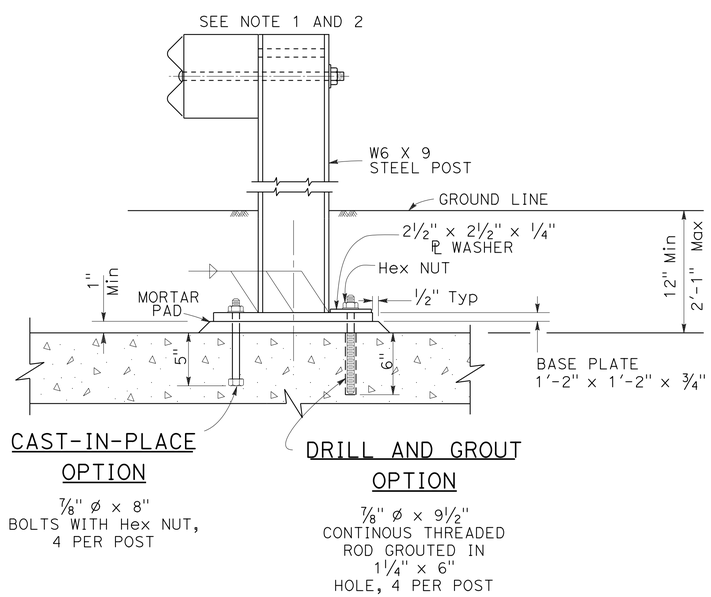

CAST-IN-PLACE OPTION

⅞" ø x 8" BOLTS WITH Hex NUT, 4 PER POST

DRILL AND GROUT OPTION

⅞" ø x 9½" CONTINOUS THREADED ROD GROUTED IN 1¼" x 6" HOLE, 4 PER POST

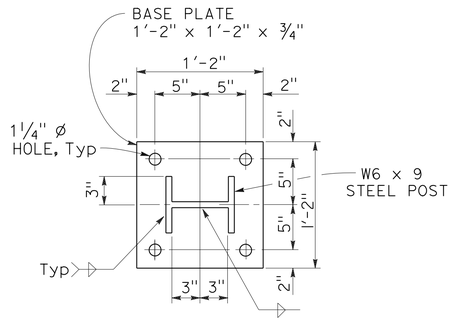

BASE PLATE PLAN

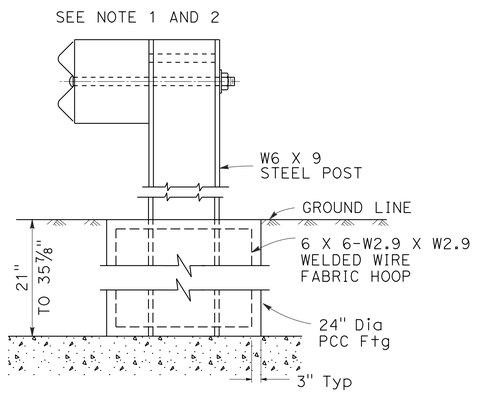

FORM SOCKET IN CONCRETE TO RECEIVE 6" X 8" POST OR PLACE CONCRETE AROUND 6" X 8" POST WRAPPED WITH ONE LAYER OF ½" THICK EXPANDED POLYSTYRENE FOAM SHEETING. DO NOT NAIL POLYSTYRENE TO POST. POST TO BE CENTERED IN CONCRETE FOOTING.

SPECIAL POST FOOTING DETAIL

1. USE THESE POST FOOTINGS ONLY WHERE STANDARD EMBEDMENT OF RAILING POST AS SHOWN IN DETAILS A AND B ON Std PLAN RSP A77N3 IS RESTRICTED BY UNDERGROUND CONCRETE FACILITIES SUCH AS FOOTING OF WALLS, COLUMNS, DRAINAGE FACILITIES, ETC.
2. DO NOT USE MORE THAN 3 SPECIAL POSTS IN SERIES UNLESS OTHERWISE DIRECTED BY THE ENGINEER

CONSTRUCTION DETAILS

NO SCALE

C-109

STATE OF CALIFORNIA - DEPARTMENT OF TRANSPORTATION — TRAFFIC

FUNCTIONAL SUPERVISOR: STEPHEN WRIGHT

CALCULATED-DESIGNED BY: AL G. CHIN

CHECKED BY: ERIC SOUZA

REVISED BY | DATE REVISED

LAST REVISION 00-00-00 | DATE PLOTTED => 29-MAY-2014 | TIME PLOTTED => 08:45

Dist	COUNTY	ROUTE	POST MILES TOTAL PROJECT	SHEET No.	TOTAL SHEETS
03	But,Col,Gln Sut,Yol,Yub	16,32,45 70,113,162	Var	127	195

Raimund Yambao 2-10-14
REGISTERED CIVIL ENGINEER DATE

2-10-14
PLANS APPROVAL DATE

REGISTERED PROFESSIONAL ENGINEER
RAIMUND J. YAMBAO
No. 80379
Exp. 3-31-15
CIVIL
STATE OF CALIFORNIA

THE STATE OF CALIFORNIA OR ITS OFFICERS OR AGENTS SHALL NOT BE RESPONSIBLE FOR THE ACCURACY OR COMPLETENESS OF SCANNED COPIES OF THIS PLAN SHEET.

NOTE:

1. EXISTING UTILITY FACILITIES HAVE NOT BEEN PLOTTED ON THESE PLANS.
2. PLACE TEMPORARY RAILING (TYPE K) ONE FOOT FROM FACE OF BRIDGE RAILING.
3. EXACT SIGN LOCATIONS TO BE DETERMINED BY THE ENGINEER.

LOCATION 421

HWY 16 YOL PM 13.59 TO 13.62

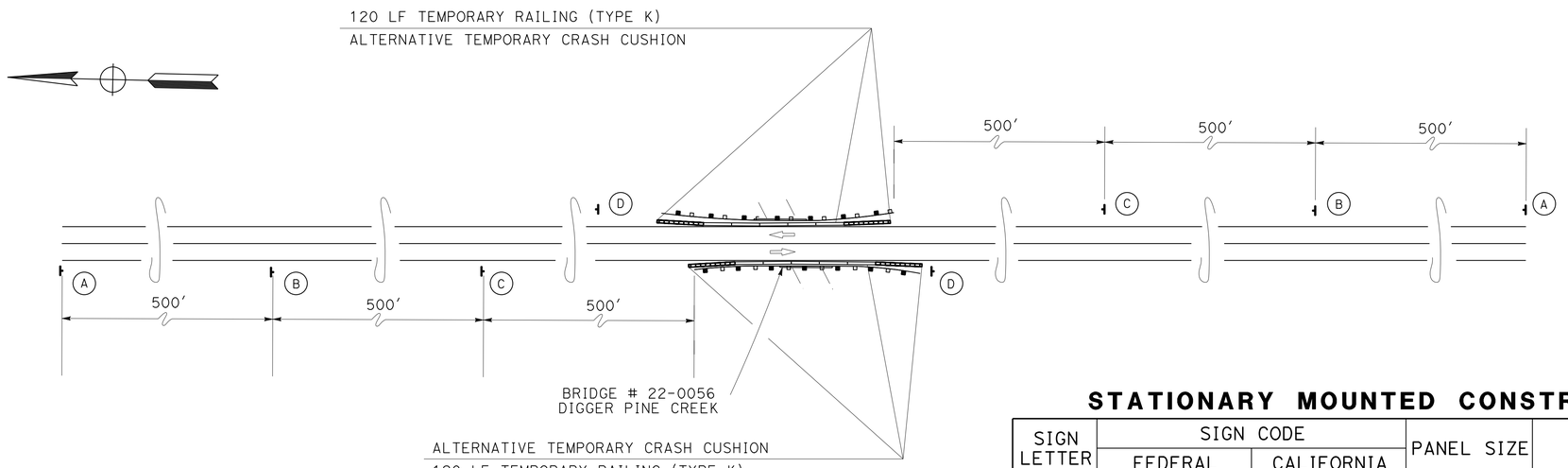

LOCATION 403

HWY 16 YOL PM 13.59 TO 13.62

STATIONARY MOUNTED CONSTRUCTION AREA SIGNS

SIGN LETTER	SIGN CODE FEDERAL	SIGN CODE CALIFORNIA	PANEL SIZE	SIGN MESSAGE	NUMBER OF POST AND SIZE	NUMBER OF SIGNS
(A)		C24	48" x 48"	SHOULDER WORK AHEAD	1 - 6" X 6"	4
(B)	W21-5bR (1000)		48" x 48"	RIGHT SHOULDER CLOSED 1000 FT	1 - 6" X 6"	4
(C)		W30A	48" x 48"	SHOULDER CLOSED	1 - 6" X 6"	4
(D)	G20-2	C14	36" x 18"	END ROAD WORK	1 - 4" X 4"	4

LOCATION 418

HWY 16 YOL PM 9.94 TO 9.97

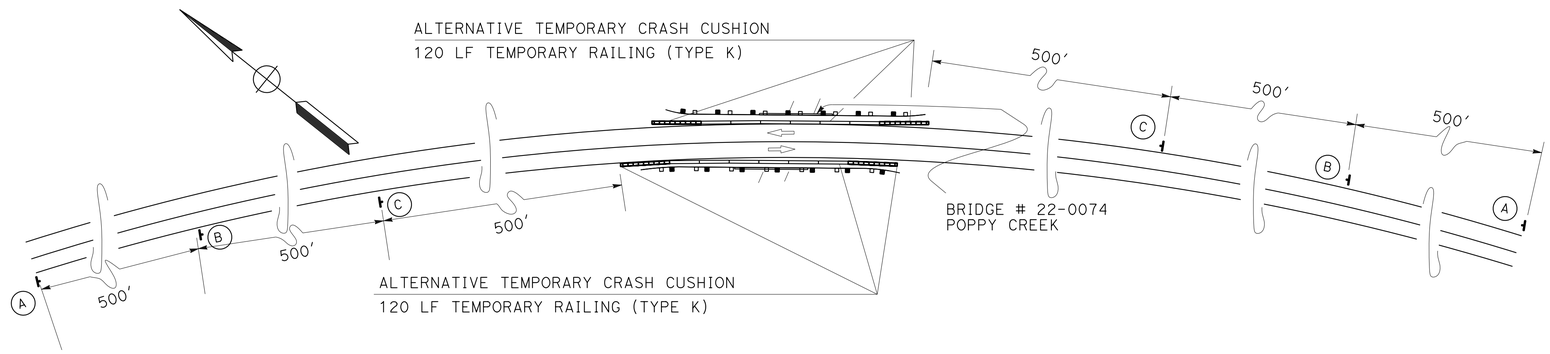

LOCATION 400

HWY 16 YOL PM 9.94 TO 9.97

CONSTRUCTION AREA SIGNS

NO SCALE

CS-1

REVISED BY	DATE REVISED

CALCULATED-DESIGNED BY: GARY DEKENS
CHECKED BY: RAIMUND YAMBAO
FUNCTIONAL SUPERVISOR: DEANN SPANGLER
STATE OF CALIFORNIA - DEPARTMENT OF TRANSPORTATION
Caltrans® DESIGN

LAST REVISION 01-27-14
DATE PLOTTED => 29-MAY-2014
TIME PLOTTED => 08:45

BORDER LAST REVISED 7/2/2010
USERNAME => s130875
DGN FILE => 03000204501a001.dgn
RELATIVE BORDER SCALE IS IN INCHES 0 1 2 3
UNIT 0327
PROJECT NUMBER & PHASE 03000204501

NOTES:

REMOVE UP TO 3 EXISTING POSTS

Dist	COUNTY	ROUTE	POST MILES TOTAL PROJECT	SHEET No.	TOTAL SHEETS
03	But,Col,Gln Sut,Yol,Yub	16,32,45 70,113,162	Var	128	195

REGISTERED CIVIL ENGINEER — 2-10-14 DATE

2-10-14
PLANS APPROVAL DATE

REGISTERED PROFESSIONAL ENGINEER
ERIC NORMAN SOUZA
No. 75706
Exp. 06-30-14
CIVIL
STATE OF CALIFORNIA

THE STATE OF CALIFORNIA OR ITS OFFICERS OR AGENTS SHALL NOT BE RESPONSIBLE FOR THE ACCURACY OR COMPLETENESS OF SCANNED COPIES OF THIS PLAN SHEET.

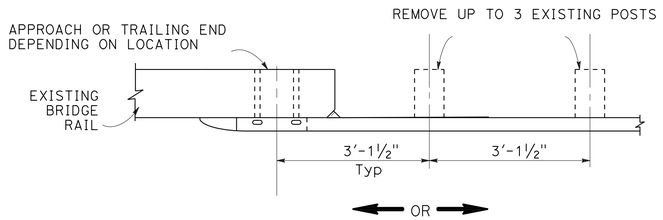

PLAN

STAGE 1

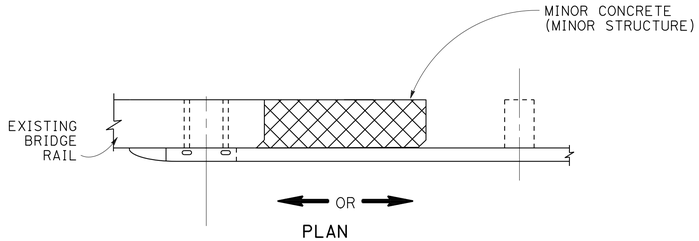

PLAN

STAGE 2

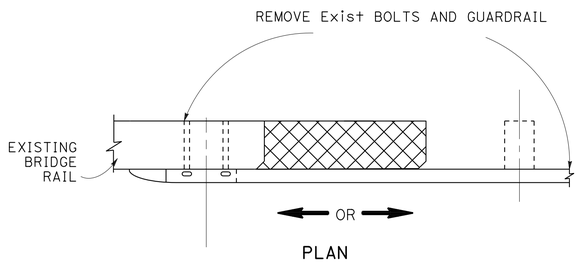

PLAN

STAGE 3

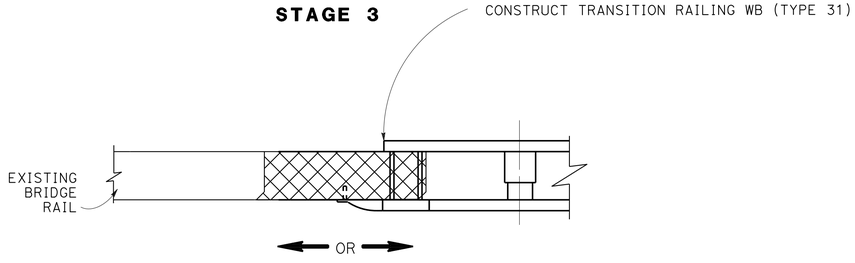

PLAN

STAGE 4

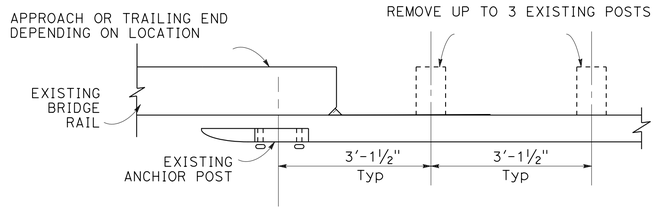

PLAN

STAGE 1

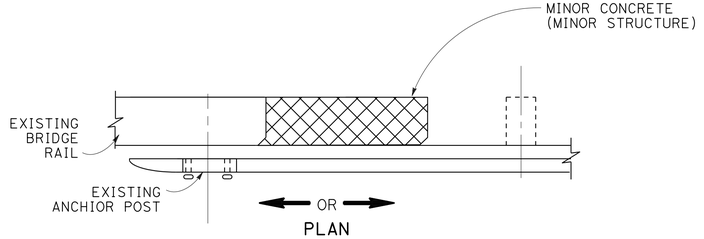

PLAN

STAGE 2

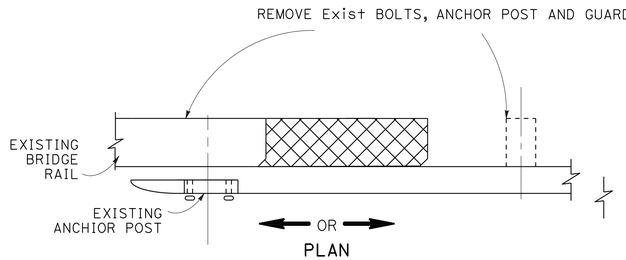

PLAN

STAGE 3

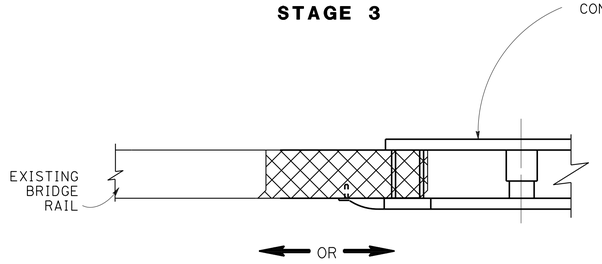

PLAN

STAGE 4

STAGE CONSTRUCTION PLAN

NO SCALE

SC-1

STATE OF CALIFORNIA - DEPARTMENT OF TRANSPORTATION
Caltrans®
TRAFFIC

FUNCTIONAL SUPERVISOR: STEPHEN WRIGHT

CALCULATED-DESIGNED BY: ERIC SOUZA
CHECKED BY: A.G. CHIN

REVISED BY | DATE REVISED

LAST REVISION 00-00-00
DATE PLOTTED => 29-MAY-2014
TIME PLOTTED => 08:45

Dist	COUNTY	ROUTE	POST MILES TOTAL PROJECT	SHEET No.	TOTAL SHEETS
03	But,Col,Gln Sut,Yol,Yub	16,32,45 70,113,162	Var	129	195

REGISTERED CIVIL ENGINEER — 2-10-14 DATE

ERIC NORMAN SOUZA No. 75706 Exp. 06-30-14 CIVIL — REGISTERED PROFESSIONAL ENGINEER — STATE OF CALIFORNIA

2-10-14
PLANS APPROVAL DATE

THE STATE OF CALIFORNIA OR ITS OFFICERS OR AGENTS SHALL NOT BE RESPONSIBLE FOR THE ACCURACY OR COMPLETENESS OF SCANNED COPIES OF THIS PLAN SHEET.

BUTTE 32

SHEET NUMBER	LOCATION	PM	TO	PM	DIRECTION	DESCRIPTION	MGS	MGS (STEEL POST)	MGS (8' STEEL POST)	REMOVE GR	(N) REMOVE CAA	AFTS	AILTS	(N) MGS BURIED POST ANCHOR	MGS END ANCHOR ASSEMBLY (TYPE SFT)	END CAP (¾ WRAP END SECTION)	* ALTERNATIVE CRASH CUSHION	(N) CONCRETE END BLOCK	MINOR CONCRETE (MINOR STRUCTURE)	TRANSITION RAILING (TYPE WB-31)	VEGETATION CONTROL (MINOR CONCRETE)	OBJECT MARKER (TYPE L-1)	(N) REMOVE Exist BURIED POST ANCHOR
							LF	LF	LF	LF	EA	EA	EA	EA	EA	EA	EA	EA	CY	EA	SQYD	EA	EA
C-1	1	0.08	TO	0.21	EB	SACRAMENTO RIVER BRIDGE (DEPARTURE)	650.0			675	1				1	1				1	378		
C-1	2	1.93	TO	1.94	EB	KUSHAL SLOUGH BRIDGE (APPROACH)				64	1	1						1	1.05	1	38	1	
C-1	3	1.98	TO	1.99	EB	KUSHAL SLOUGH BRIDGE (DEPARTURE)	37.5			64	1				1	1		1	1.05	1	38		
C-1	4	2.07	TO	2.08	EB	ROCK CREEK BRIDGE (APPROACH)				64	1	1						1	1.05	1	38	1	
C-1	5	2.12	TO	2.13	EB	ROCK CREEK BRIDGE (DEPARTURE)	37.5			64	1				1	1		1	1.05	1	38		
C-2	6	2.32	TO	2.33	EB	ROCK CREEK OVERFLOW BRIDGE (APPROACH)				62	1	1						1	1.05	1	38	1	
C-2	7	2.34	TO	2.35	EB	ROCK CREEK OVERFLOW BRIDGE (DEPARTURE)	37.5			62	1				1	1		1	1.05	1	38		
C-2	8	2.38	TO	2.39	EB	ROCK CREEK OVERFLOW BRIDGE (APPROACH)				62	1	1						1	1.05	1	38	1	
C-2	9	2.40	TO	2.41	EB	ROCK CREEK OVERFLOW BRIDGE (DEPARTURE)	37.5			62	1				1	1		1	1.05	1	38		
C-2	10	3.73	TO	3.74	EB	GABLE DRAW BRIDGE (APPROACH)				62	1	1						1	1.05	1	38	1	
C-2	11	3.75	TO	3.76	EB	GABLE DRAW BRIDGE (DEPARTURE)	37.5			62	1				1	1		1	1.05	1	38		
C-3	14	R23.59	TO	R23.71	EB	BETWEEN FOREST RANCH WAY & NOPEL AVE			600.0	638	2	1			1	1						1	
C-4	15	30.87	TO	30.90	EB	EAST OF PLATT MOUNTAIN RD		100.0		148	2		1		1	1							
C-4	16	30.93	TO	31.06	EB	WEST OF CARPENTER RIDGE RD		637.5		725	2	1	1									1	
C-4	17	31.15	TO	31.20	EB	WEST OF CARPENTER RIDGE RD		300.0		291				2								1	2
C-5	18	R33.70	TO	R33.73	EB	EAST OF CARPENTER RIDGE RD		412.5		450	2	1			1	1						1	
C-5	19	R33.89	TO	R34.13	EB	EAST OF CARPENTER RIDGE RD		1,225.0		1,262	2	1			1	1						1	
C-5	20	R36.44	TO	R36.50	EB	WEST OF HUMBOLDT RD		1,125.0		1,160	2	1			1	1						1	
C-5	21	R36.75	TO	R36.80	EB	WEST OF HUMBOLDT RD		825.0		860	2	1			1	1						1	
C-1	22	0.09	TO	0.26	WB	SACRAMENTO RIVER BRIDGE (DEPARTURE)	825.0			879	1	1								1		1	
C-1	23	1.92	TO	1.93	WB	KUSHAL SLOUGH BRIDGE (DEPARTURE)	37.5			64	1				1	1		1	1.05	1			
C-1	24	1.98	TO	1.99	WB	KUSHAL SLOUGH BRIDGE (APPROACH)				64	1	1						1	1.05	1		1	
C-1	25	2.07	TO	2.08	WB	ROCK CREEK BRIDGE (DEPARTURE)	37.5			64	1				1	1		1	1.05	1			
C-1	26	2.11	TO	2.12	WB	ROCK CREEK BRIDGE (APPROACH)				26	1						1		2.90				
C-2	27	2.32	TO	2.33	WB	ROCK CREEK OVERFLOW BRIDGE (DEPARTURE)	37.5			62	1				1	1		1	1.05	1			
C-2	28	2.34	TO	2.35	WB	ROCK CREEK OVERFLOW BRIDGE (APPROACH)				62	1	1						1	1.05	1		1	
C-2	29	2.37	TO	2.38	WB	ROCK CREEK OVERFLOW BRIDGE (DEPARTURE)	37.5			62	1				1	1		1	1.05	1			
C-2	30	2.38	TO	2.40	WB	ROCK CREEK OVERFLOW BRIDGE (APPROACH)				62	1	1						1	1.05	1		1	
C-2	31	3.73	TO	3.74	WB	GABLE DRAWBRIDGE (DEPARTURE)	37.5			62	1				1	1		1	1.05	1			
C-2	32	3.75	TO	3.76	WB	GABLE DRAWBRIDGE (APPROACH)				62	1	1						1	1.05	1		1	
C-3	35	R23.60	TO	R23.66	WB	BETWEEN FOREST RANCH WAY & NOPEL AVE			312.5	350	2	1			1	1						1	
C-3	36	30.25	TO	30.36	WB	EAST OF PLATT MOUNTAIN RD		537.5		575	2	1			1	1						1	
						SUBTOTAL	1,850.0	5,162.5	912.5	9,231	40	18	2	2	19	19	1	19	22.85	21	758	19	2

(N) - NOT A SEPARATE PAY ITEM, FOR INFORMATION ONLY

* ALLOWABLE ALTERNATIVE CRASH CUSHION NATIONAL COOPERATIVE HIGHWAY RESEARCH PROGRAM REPORT 350 (MININMUM TEST LEVEL 3)
UNIVERSAL TAU II BY BARRIER SYSTEMS, INC.
QUADGUARD BY ENERGY ABSORBTION SYSTEMS INC.
SCI-100GM BY SCI PRODUCTS INC.

SUMMARY OF QUANTITIES
Q-1

AL G. CHIN — CALCULATED-DESIGNED BY
ERIC SOUZA — CHECKED BY
REVISED BY — DATE REVISED
STEPHEN WRIGHT — FUNCTIONAL SUPERVISOR
STATE OF CALIFORNIA - DEPARTMENT OF TRANSPORTATION — TRAFFIC

LAST REVISION 10-29-13 — DATE PLOTTED => 29-MAY-2014 — TIME PLOTTED => 08:45

BORDER LAST REVISED 7/2/2010 | USERNAME => s130875 | DGN FILE => 0300020450pa001.dgn | RELATIVE BORDER SCALE IS IN INCHES 0 1 2 3 | UNIT 0399 | PROJECT NUMBER & PHASE 03000204501

Dist	COUNTY	ROUTE	POST MILES TOTAL PROJECT	SHEET No.	TOTAL SHEETS
03	But,Col,Gln Sut,Yol,Yub	16,32,45 70,113,162	Var	130	195

REGISTERED CIVIL ENGINEER — 2-10-14 DATE

ERIC NORMAN SOUZA No. 75706 Exp. 06-30-14 CIVIL — REGISTERED PROFESSIONAL ENGINEER — STATE OF CALIFORNIA

2-10-14
PLANS APPROVAL DATE

THE STATE OF CALIFORNIA OR ITS OFFICERS OR AGENTS SHALL NOT BE RESPONSIBLE FOR THE ACCURACY OR COMPLETENESS OF SCANNED COPIES OF THIS PLAN SHEET.

BUTTE 70

SHEET NUMBER	LOCATION	PM	TO	PM	DIRECTION	DESCRIPTION	MGS	MGS (STEEL POST)	MGS (8' STEEL POST)	REMOVE GR	(N) REMOVE CAA	(N) REMOVE ANCHOR POST	REMOVE CONCRETE	AFTS	AILTS	(N) MGS BURIED POST ANCHOR	MGS END ANCHOR ASSEMBLY (TYPE SFT)	END CAP (¾ WRAP END SECTION)	(N) CONCRETE END BLOCK	MINOR CONCRETE (MINOR STRUCTURE)	MINOR HMA	PLACE HMA (MISCELLANEOUS AREA)	TRANSITION RAILING (TYPE WB-31)	VEGETATION CONTROL (MINOR CONCRETE)	OBJECT MARKER (TYPE L-1)	(N) REMOVE Exist BURIED POST ANCHOR
							LF	LF	LF	LF	EA	EA	CY	EA	EA	EA	EA	EA	EA	CY	TON	SQYD	EA	SQYD	EA	EA
C-6	37	14.81	TO	14.83	EB	FEATHER RIVER BRIDGE (APPROACH)	37.5			100	1		0.3	1							1.4	2.2	1	81	1	
C-6	38	18.39	TO	18.41	EB	COTTONWOOD CREEK OC BRIDGE (APPROACH)	62.5			100	2			1			1							82	1	
C-6	39	18.48	TO	18.49	EB	DUDLEY CREEK BRIDGE (APPROACH)	25.0			76	1				1				1	1.07			1	70		
C-6	40	18.63	TO	18.65	EB	BETWEEN DUDLEY CREEK BRIDGE AND TABLE MOUNTAIN ROAD OC BRIDGE	62.5			100	2			1			1							74	1	
C-7	41	19.27	TO	19.29	EB	TABLE MOUNTAIN ROAD OC BRIDGE (APPROACH)	75.0			113	2			1			1							69	1	
C-7	42	19.60	TO	19.61	EB	CAMPBELL CREEK BRIDGE (APPROACH)				64	1			1					1	1.08			1	52	1	
C-7	43	19.78	TO	19.80	EB	CAMPBELL CREEK OVERFLOW (APPROACH)	37.5			100	1			1					1	1.13			1	81	1	
C-7	44	22.28	TO	22.45	EB	EAST OF JCT RTE 191			825.0	875	1				1	1										1
C-8	45	23.08	TO	23.20	EB	EAST OF JCT RTE 191		500.0		589	2				2											
C-8	46	23.76	TO	23.80	EB	EAST OF JCT RTE 191		100.0		200	2				2											
C-8	47	24.46	TO	24.65	EB	EAST OF FLAG CANYON CREEK BRIDGE		1,000.0		1,000	1					1	1	1							1	1
C-8	48	24.74	TO	24.78	EB	EAST OF FLAG CANYON CREEK BRIDGE		150.0		200	1				1	1									1	1
C-8	49	24.85	TO	24.92	EB	EAST OF FLAG CANYON CREEK BRIDGE		237.5		338	2				2											
C-9	50	25.07	TO	25.19	EB	EAST OF FLAG CANYON CREEK BRIDGE		587.5		625	2			1			1	1							1	
C-9	51	25.22	TO	25.36	EB	EAST OF FLAG CANYON CREEK BRIDGE			700.0	738	2			1			1	1							1	
C-9	52	25.48	TO	25.52	EB	EAST OF FLAG CANYON CREEK BRIDGE		212.5		213						2									1	2
C-9	53	25.60	TO	25.68	EB	EAST OF FLAG CANYON CREEK BRIDGE		437.5		438						2									1	2
C-10	54	25.77	TO	25.87	EB	EAST OF FLAG CANYON CREEK BRIDGE			550.0	550						2									1	2
C-10	55	25.98	TO	26.07	EB	EAST OF FLAG CANYON CREEK BRIDGE			475.0	475						2									1	2
C-10	56	26.19	TO	26.26	EB	WEST OF PENTZ RD		350.0		352	1					1	1								1	1
C-10	57	26.31	TO	26.69	EB	WEST OF PENTZ RD			1,962.5	2,013	1				1	1									1	1
C-12	59	30.55	TO	30.63	EB	WEST OF YANKEE HILL RD			437.5	438	1					1	1								1	1
C-12	60	30.92	TO	30.94	EB	WEST OF YANKEE HILL RD			100.0	138	2			1			1								1	
C-13	61	30.98	TO	31.20	EB	WEST OF YANKEE HILL RD			1,162.5	1,250	2			1	1										1	
C-13	62	31.69	TO	31.75	EB	EAST OF LUNT RD			300.0	375	2			2											1	
C-15	63	34.02	TO	34.21	EB	EAST OF PINKSTON CANYON RD		975.0		1,013	1			1		1									1	1
C-15	64	34.34	TO	34.56	EB	BETWEEN PINKSTON CANYON RD ADN BACKACHE RD		1,137.5		1,188	1				1	1									1	1
C-15	65	35.97	TO	36.03	EB	EAST OF DEADWOOD RD		275.0		313	2			1			1	1							1	
C-15	66	37.68	TO	37.82	EB	EAST OF DEADWOOD RD		712.5		750	1			1		1									1	1
C-15	67	37.85	TO	38.03	EB	BETWEEN DEADWOOD RD AND PULGA RD		925.0		925	1					1	1	1							1	1
C-16	68	38.06	TO	38.29	EB	BETWEEN DEADWOOD RD AND PULGA RD		1,187.5		1,250	1			1		1									1	1
C-16	69	38.81	TO	38.92	EB	BETWEEN DEADWOOD RD AND PULGA RD		612.5		613	1					1	1	1							1	1
C-16	70	39.16	TO	39.21	EB	BETWEEN DEADWOOD RD AND PULGA RD		275.0		313	2			1			1	1							1	
C-16	71	39.33	TO	39.48	EB	BETWEEN DEADWOOD RD AND PULGA RD		750.0		788		1				1			1	2.09			1		1	1
C-17	72	39.50	TO	39.53	EB	BETWEEN DEADWOOD RD AND PULGA RD		75.0		138		2							2	4.18			2			
C-17	73	39.55	TO	39.56	EB	BETWEEN DEADWOOD RD AND PULGA RD				63	1	1		1					1	2.09			1			
C-17	74	39.62	TO	39.63	EB	BETWEEN DEADWOOD RD AND PULGA RD				63	1	1		1					1	2.09			1		1	
						SUBTOTAL	300.0	10,500.0	6,512.5	18,877	44	5	0.3	19	12	21	13	7	8	13.73	1.4	2.2	9	509	30	21

(N) - NOT A SEPARATE PAY ITEM, FOR INFORMATION ONLY.

SUMMARY OF QUANTITIES
Q-2

LAST REVISION 11-12-13 | DATE PLOTTED => 29-MAY-2014 | TIME PLOTTED => 08:45

STATE OF CALIFORNIA - DEPARTMENT OF TRANSPORTATION — TRAFFIC — Caltrans

FUNCTIONAL SUPERVISOR: STEPHEN WRIGHT

CALCULATED-DESIGNED BY: AL G. CHIN

CHECKED BY: ERIC SOUZA

REVISED BY | DATE REVISED

BORDER LAST REVISED 7/2/2010

USERNAME => s130875
DGN FILE => 0300020450pa002.dgn

RELATIVE BORDER SCALE IS IN INCHES 0 1 2 3

UNIT 0399

PROJECT NUMBER & PHASE 03000204501

Dist	COUNTY	ROUTE	POST MILES TOTAL PROJECT	SHEET No.	TOTAL SHEETS
03	But,Col,Gln Sut,Yol,Yub	16,32,45 70,113,162	Var	131	195

REGISTERED CIVIL ENGINEER — DATE 2-10-14

PLANS APPROVAL DATE 2-10-14

REGISTERED PROFESSIONAL ENGINEER — ERIC NORMAN SOUZA — No. 75706 — Exp. 06-30-14 — CIVIL — STATE OF CALIFORNIA

THE STATE OF CALIFORNIA OR ITS OFFICERS OR AGENTS SHALL NOT BE RESPONSIBLE FOR THE ACCURACY OR COMPLETENESS OF SCANNED COPIES OF THIS PLAN SHEET.

BUTTE 70

SHEET NUMBER	LOCATION	PM	TO	PM	DIRECTION	DESCRIPTION	MGS	MGS (STEEL POST)	MGS (8' STEEL POST)	REMOVE GR	(N) REMOVE CAA	(N) REMOVE ANCHOR POST	AFTS	AILTS	REMOVE CONCRETE	(N) MGS BURIED POST ANCHOR	MGS END ANCHOR ASSEMBLY (TYPE SFT)	END CAP (¾ WRAP END SECTION)	(N) CONCRETE END BLOCK	MINOR CONCRETE (MINOR STRUCTURE)	MINOR HMA	PLACE HMA (MISCELLANEOUS AREA)	TRANSITION RAILING (TYPE WB-31)	VEGETATION CONTROL (MINOR CONCRETE)	OBJECT MARKER (TYPE L-1)	(N) REMOVE Exist BURIED POST ANCHOR
							LF	LF	LF	LF	EA	EA	EA	EA	CY	EA	EA	EA	EA	CY	TON	SQYD	EA	SQYD	EA	EA
C-17	75	39.64	TO	39.65	EB	BETWEEN DEADWOOD RD AND PULGA RD				63	1	1	1						1	2.09			1			
C-17	78	39.94	TO	39.95	EB	BETWEEN DEADWOOD RD AND PULGA RD				63	1	1	1						1	2.09			1		1	1
C-17	79	39.99	TO	40.05	EB	BETWEEN DEADWOOD RD AND PULGA RD			262.5	325		2							2	4.18			2			
C-17	80	40.22	TO	40.29	EB	BETWEEN DEADWOOD RD AND PULGA RD		350		350	1					1	1	1							1	1
C-18	81	40.45	TO	40.47	EB	BETWEEN DEADWOOD RD AND PULGA RD		50		75	1	1					1		1	2.43			1			
C-18	82	40.48	TO	40.50	EB	BETWEEN DEADWOOD RD AND PULGA RD		62.5		100		1				1			1	2.43			1			1
C-18	83	40.52	TO	40.53	EB	EAST OF PULGA RD		37.5		63		1				1			1	2.09			1		1	1
C-18	84	40.54	TO	40.62	EB	EAST OF PULGA RD			412.5	450						1			1	1.51			1			1
C-18	85	40.65	TO	40.68	EB	EAST OF PULGA RD			75	138		2							2	4.52			2			
C-18	86	40.73	TO	40.75	EB	EAST OF PULGA RD		37.5		100		2							2	4.52			2			
C-18	87	40.76	TO	40.79	EB	EAST OF PULGA RD		125		188		2							2	4.18			2			
C-18	88	40.84	TO	40.85	EB	EAST OF PULGA RD & NORTH FORK FEATHER RIVER BRIDGE				75	1	1							1	2.09			1			
C-21	89	44.42	TO	44.44	EB	PENSTOCK UC BRIDGE (APPROACH)				65	1		1						1	1.25			1		1	
C-21	90	44.45	TO	44.50	EB	PENSTOCK UC BRIDGE (DEPARTURE)		212.5		238						1			1	1.38			1			1
C-21	91	46.85	TO	46.87	EB	WEST OF ARCH ROCK TUNNEL		87.5		125	1		1			1									1	1
C-21	92	47.13	TO	47.15	EB	ARCH ROCK TUNNEL (APPROACH)		37.5		63						1			1	2.44			1		1	1
C-6	93	14.92	TO	14.94	WB	FEATHER RIVER BRIDGE (APPROACH)	25.0			88	1		1		0.3						1.4	2.2	1	52	1	
C-6	94	18.40	TO	18.42	WB	COTTONWOOD CREEK OC BRIDGE (APPROACH)	62.5			102	2		1				1							62	1	
C-6	95	18.51	TO	18.52	WB	DUDLEY CREEK BRIDGE (APPROACH)	25.0			76	1			1					1	1.09			1	81		
C-6	96	18.64	TO	18.66	WB	EAST OF DUDLEY CREEK BRIDGE (APPROACH)	62.5			100	2		1				1							86	1	
C-7	97	19.28	TO	19.30	WB	TABLE MOUNTAIN ROAD OC BRIDGE (APPROACH)	75.0			113	2		1				1							95	1	
C-7	98	19.60	TO	19.62	WB	CAMPBELL CREEK BRIDGE (APPROACH)	75.0			113	2		1				1							95	1	
C-7	99	22.28	TO	22.46	WB	EAST OF JCT RTE 191		875.0		925	1			1		1									1	1
C-8	100	23.09	TO	23.22	WB	EAST OF JCT RTE 191		575.0		665	2			2												
C-8	101	23.76	TO	23.80	WB	EAST OF JCT RTE 191		100.0		200	2			2												
C-8	102	24.47	TO	24.69	WB	EAST OF WHEELOCK RD		1,200.0		1,200						2									1	2
C-8	103	24.74	TO	24.94	WB	EAST OF WHEELOCK RD		1,062.5		1,063						2									1	2
C-9	104	25.05	TO	25.18	WB	BETWEEN WHEELOCK RD AND SMITH HILL LN		662.5		700	1		1			1									1	1
C-9	105	25.21	TO	25.37	WB	BETWEEN WHEELOCK RD AND SMITH HILL LN		862.5		863	1					1	1	1							1	1
C-9	106	25.49	TO	25.56	WB	BETWEEN WHEELOCK RD AND SMITH HILL LN		387.5		389						2									1	2
C-9	107	25.60	TO	25.69	WB	BETWEEN WHEELOCK RD AND SMITH HILL LN		512.5		512						2									1	2
C-10	108	25.77	TO	26.07	WB	WEST OF SMITH HILL LN			1,562.5	1,600	1		1			1									1	1
C-10	109	26.11	TO	26.15	WB	WEST OF SMITH HILL LN		187.5		225	1		1			1									1	1
C-10	110	26.19	TO	26.27	WB	WEST OF SMITH HILL LN		387.5		425	1		1			1									1	1
C-10	111	26.32	TO	26.46	WB	WEST OF PENTZ RD			1,375.0	1,463	2		1	1											1	
						SUBTOTAL	325.0	7,812.5	3,687.5	13,303	28	14	15	7	0.3	21	7	2	19	38.29	1.4	2.2	20	471	22	22

(N) - NOT A SEPARATE PAY ITEM, FOR INFORMATION ONLY.

SUMMARY OF QUANTITIES

Q-3

LAST REVISION 11-12-13 — DATE PLOTTED => 29-MAY-2014 — TIME PLOTTED => 08:45

STATE OF CALIFORNIA - DEPARTMENT OF TRANSPORTATION — Caltrans® — TRAFFIC

FUNCTIONAL SUPERVISOR: STEPHEN WRIGHT

CALCULATED-DESIGNED BY: AL G. CHIN

CHECKED BY: ERIC SOUZA

REVISED BY

DATE REVISED

BORDER LAST REVISED 7/2/2010

USERNAME => s130875

DGN FILE => 0300020450pa003.dgn

RELATIVE BORDER SCALE IS IN INCHES 0 1 2 3

UNIT 0399

PROJECT NUMBER & PHASE 03000204501

Dist	COUNTY	ROUTE	POST MILES TOTAL PROJECT	SHEET No.	TOTAL SHEETS
03	But,Col,Gln Sut,Yol,Yub	16,32,45 70,113,162	Var	132	195

REGISTERED CIVIL ENGINEER — DATE: 2-10-14

PLANS APPROVAL DATE: 2-10-14

REGISTERED PROFESSIONAL ENGINEER — ERIC NORMAN SOUZA — No. 75706 — Exp. 06-30-14 — CIVIL — STATE OF CALIFORNIA

THE STATE OF CALIFORNIA OR ITS OFFICERS OR AGENTS SHALL NOT BE RESPONSIBLE FOR THE ACCURACY OR COMPLETENESS OF SCANNED COPIES OF THIS PLAN SHEET.

BUTTE 70

	LOCATION	PM	TO	PM	DIRECTION	DESCRIPTION	MGS (STEEL POST)	MGS (8' STEEL POST)	REMOVE GUARDRAIL	(N) REMOVE CAA	(N) REMOVE ANCHOR POST	AFTS	AILTS	(N) MGS BURIED POST ANCHOR	MGS END ANCHOR ASSEMBLY (TYPE SFT)	(N) CONCRETE END BLOCK	MINOR CONCRETE (MINOR STRUCTURE)	TRANSITION RAILING (TYPE WB-31)	OBJECT MARKER (TYPE L-1)	(N) REMOVE Exist BURIED POST ANCHOR	END CAP (3/4 WRAP END SECTION)
							LF	LF	LF	EA	EA	EA	EA	EA	EA	EA	CY	EA	EA	EA	EA
C-10	112	26.47	TO	26.70	WB	WEST OF PENTZ RD		1,787.5	1,875	2		1	1						1		
C-11	115	29.34	TO	29.46	WB	WEST OF TRUEX RD	587.5		638	2			1		1						
C-11	116	29.94	TO	30.02	WB	WEST OF YANKEE HILL RD	375.0		413	2		1			1				1		
C-11	117	30.09	TO	30.28	WB	WEST OF YANKEE HILL RD	1,025.0		1,054	2		1			1				1		
C-12	118	30.37	TO	30.42	WB	WEST OF YANKEE HILL RD	175.0		225	2			1		1						
C-12	119	30.77	TO	30.83	WB	WEST OF YANKEE HILL RD	287.5		288	1				1	1				1	1	
C-13	120	31.36	TO	31.57	WB	BETWEEN YANKEE HILL RD AND LUNT RD	1,137.5		1,138	1				1	1				1	1	
C-13	121	31.62	TO	31.66	WB	WEST OF LUNT RD		275.0	325	2			1		1						
C-13	122	31.65	TO	32.00	WB	BETWEEN NORTH AND SOUTH LUNT RD		1,737.5	1,775	2		1			1				1		
C-14	123	32.16	TO	32.29	WB	BETWEEN LUNT RD AND YANKEE HILL RD		775.0	813	2		1			1				1		
C-14	124	32.67	TO	32.74	WB	BETWEEN LUNT RD AND YANKEE HILL RD	325.0		363	2		1			1						
C-14	125	32.95	TO	33.07	WB	BETWEEN YANKEE HILL RD AND MILLER FLAT RD	637.5		638	1				1	1				1	1	
C-15	126	34.38	TO	34.54	WB	WEST OF BACKACHE RD	850.0		888	1		1		1					1	1	
C-19	127	41.90	TO	41.95	WB	EAST OF 4 TREES RD	200.0		275	2		2							1		
C-19	128	42.41	TO	42.56	WB	WEST OF PG&E POWER DAM	775.0		813	1	6	1									1
C-19	129	42.57	TO	42.59	WB	EAST OF PG&E POWER DAM	25.0		64	1	2	1							1		1
C-19	130	42.63	TO	42.71	WB	EAST OF PG&E POWER DAM		375.0	440	2		2							1		
C-19	131	42.72	TO	42.74	WB	HISTORIC WALL (DEPARTURE)			65	1	1	1				1	2.09	1			
C-19	132	42.76	TO	42.80	WB	HISTORIC WALL (APPROACH)	145.0		213	1	1	1				1	2.43	1	1		
C-19	133	43.05	TO	43.07	WB	EAST OF PG&E POWER DAM	50.0		128	2		2							1		
C-19	134	43.38	TO	43.39	WB	HISTORIC WALL (DEPARTURE)			65	1	1	1				1	2.43	1			
C-19	135	43.40	TO	43.43	WB	HISTORIC WALL (APPROACH)	100.0		152		8					2	4.86	2			
C-20	136	43.48	TO	43.53	WB	HISTORIC WALL (DEPARTURE)	337.5		401		8					2	4.52	2			
C-20	137	43.57	TO	43.59	WB	HISTORIC WALL (DEPARTURE)	87.5		145		7					2	4.86	2			
C-20	138	43.61	TO	43.62	WB	HISTORIC WALL (APPROACH)			65	1	4	1				1	2.43	1	1		
C-20	139	43.71	TO	43.73	WB	HISTORIC WALL (DEPARTURE)			63	1	4	1				1	2.09	1			
C-20	140	43.81	TO	43.86	WB	HISTORIC WALL (APPROACH)		237.5	301	1	4	1				1	2.43	1	1		
C-20	141	43.99	TO	44.00	WB	HISTORIC WALL (DEPARTURE)			65	1		1				1	2.09	1			
C-20	142	44.07	TO	44.08	WB	HISTORIC WALL (APPROACH)			65	1		1				1	2.09	1	1		
C-21	143	44.36	TO	44.43	WB	PENSTOCK UC BRIDGE (DEPARTURE)	275.0		336	1		1				1	1.63	1			
C-21	144	44.44	TO	44.51	WB	PENSTOCK UC BRIDGE (APPROACH)	250.0		313	1		1				1	1.69	1	1		
C-21	145	46.90	TO	47.06	WB	WEST OF ARCH ROCK TUNNEL	750.0		838	2		1	1								
C-21	146	47.13	TO	47.15	WB	ARCH ROCK TUNNEL (DEPARTURE)	50.0		113	1		1				1	2.44	1			
C-21	147	47.19	TO	47.20	WB	ARCH ROCK TUNNEL (APPROACH)			64	1		1				1	2.44	1	1		
C-22	147A	47.62	TO	47.68	WB	RETAINING WALL	237.5		300	1		1				1	1.23	1			
C-22	148	47.73	TO	48.01	WB	RETAINING WALL	1,437.5		1,500	1		1				1	1.23	1	1		
						SUBTOTAL	10,120.0	5,187.5	17,217	46	46	28	5	4	11	20	42.98	20	20	4	2

(N) - NOT A SEPARATE PAY ITEM, FOR INFORMATION ONLY.

SUMMARY OF QUANTITIES

Q-4

CALCULATED-DESIGNED BY: AL G. CHIN
CHECKED BY: ERIC SOUZA
REVISED BY
DATE REVISED
FUNCTIONAL SUPERVISOR: STEPHEN WRIGHT
STATE OF CALIFORNIA - DEPARTMENT OF TRANSPORTATION
Caltrans®
TRAFFIC

LAST REVISION 00-00-00 — DATE PLOTTED => 29-MAY-2014 — TIME PLOTTED => 08:45

BORDER LAST REVISED 7/2/2010 | USERNAME => s130875 | DGN FILE => 0300020450pa004.dgn | RELATIVE BORDER SCALE IS IN INCHES 0 1 2 3 | UNIT 0399 | PROJECT NUMBER & PHASE 03000204501

Dist	COUNTY	ROUTE	POST MILES TOTAL PROJECT	SHEET No.	TOTAL SHEETS
03	But,Col,Gln Sut,Yol,Yub	16,32,45 70,113,162	Var	133	195

REGISTERED CIVIL ENGINEER — DATE 2-10-14

PLANS APPROVAL DATE 2-10-14

REGISTERED PROFESSIONAL ENGINEER — ERIC NORMAN SOUZA No. 75706 Exp. 06-30-14 CIVIL — STATE OF CALIFORNIA

THE STATE OF CALIFORNIA OR ITS OFFICERS OR AGENTS SHALL NOT BE RESPONSIBLE FOR THE ACCURACY OR COMPLETENESS OF SCANNED COPIES OF THIS PLAN SHEET.

CALCULATED-DESIGNED BY: AL G. CHIN
CHECKED BY: ERIC SOUZA
REVISED BY
DATE REVISED
FUNCTIONAL SUPERVISOR: STEPHEN WRIGHT

STATE OF CALIFORNIA - DEPARTMENT OF TRANSPORTATION
Caltrans®
TRAFFIC

BUTTE 162

SHEET NUMBER	LOCATION	PM	TO	PM	DIRECTION	DESCRIPTION	MGS	REMOVE GUARDRAIL	(N) REMOVE CAA	(N) REMOVE ANCHOR POST	AFTS	AILTS	(N) MGS BURIED POST ANCHOR	MGS END ANCHOR ASSEMBLY (TYPE SFT)	END CAP (¾ WRAP END SECTION)	(N) CONCRETE END BLOCK	MINOR CONCRETE (MINOR STRUCTURE)	MINOR HMA	PLACE HMA (MISCELLANEOUS AREA)	TRANSITION RAILING (TYPE WB-31)	VEGETATION CONTROL (MINOR CONCRETE)	OBJECT MARKER (TYPE L-1)	(N) REMOVE Exist BURIED POST ANCHOR
							LF	LF	EA	EA	EA	EA	EA	EA	EA	EA	CY	TON	SQYD	EA	SQYD	EA	EA
C-23	149	0.03	TO	0.04	EB	BIG BUTTE CREEK BRIDGE (DEPARTURE)	37.5	64	1	1				1	1	1	0.74			1	52		
C-23	154	1.32	TO	1.33	EB	DRY CREEK BRIDGE (APPROACH)		53	1		1					1	0.74			1	52	1	
C-23	156	8.10	TO	8.11	EB	BIGGS EXTENSION CANAL BRIDGE (DEPARTURE)	37.5	64	2			2									114		
C-24	157	R9.78	TO	R9.90	EB	OROVILLE DAM BLVD WEST	600.0	654	2	2		1		1	1						367		
C-24	158	R10.09	TO	R10.11	EB	THERMOLITO AFTERBAY BRIDGE (APPROACH)	62.5	127	1		1					1	1.09			1	100	1	
C-24	159	R10.25	TO	R10.27	EB	THERMOLITO AFTERBAY BRIDGE (DEPARTURE)	37.5	65	1					1	1	1	1.09			1	71		
C-26	160	20.23	TO	20.31	EB	BETWEEN TYME WAY AND OROVILLE QUINCY HWY	362.5	440	2		2											1	
C-26	161	21.78	TO	21.81	EB	BETWEEN QUINCY PL AND HERITAGE RD	187.5	205	2		1			1	1							1	
C-26	162	21.82	TO	21.85	EB	BETWEEN QUINCY PL AND HERITAGE RD	62.5	142	2		1	1										1	
C-26	163	21.92	TO	22.10	EB	HERITAGE RD	837.5	938	2			2											
C-27	164	23.15	TO	23.16	EB	EAST OF OLD OLIVE HWY	137.5	140	2					2	2								
C-27	165	26.86	TO	26.88	EB	MIDDLE FORK FEATHER RIVER BRIDGE (APPROACH)	50.0	75	1	2			1			1	1.55			1		1	1
C-27	166	27.21	TO	27.22	EB	MIDDLE FORK FEATHER RIVER BRIDGE (DEPARTURE)		77	1		1					1	1.15			1			
C-29	167	28.25	TO	28.27	EB	EAST OF SIMMONS RD	125.0	115	1				1	1								1	1
C-29	168	29.25	TO	29.27	EB	BETWEEN SIMMONS RD AND CANYON CREEK BRIDGE	125.0	125	1				1	1									1
C-30	169	29.94	TO	29.96	EB	CANYON CREEK BRIDGE (APPROACH)		64	1	1	1					1	1.24	1.4	2.2	1		1	
C-30	170	30.12	TO	30.13	EB	CANYON CREEK BRIDGE (DEPARTURE)		66	1		1					1	1.24	1.4	2.2	1			
C-30	171	30.23	TO	30.41	EB	EAST OF CANYON CREEK BRIDGE	1,062.5	1,150	2		1	1										1	
C-31	172	30.48	TO	30.72	EB	EAST OF RATCHEL MOUNTAIN DR	1,237.5	1,275	1		1		1									1	1
C-31	173	30.74	TO	30.94	EB	BETWEEN RATCHEL MOUNTAIN DR AND FOREMAN CREEK RD	987.5	1,063	2		2											1	
C-31	174	31.00	TO	31.09	EB	FOREMAN CREEK RD	425.0	500	2		2											1	
						SUBTOTAL	6,375.0	7,402	31	6	15	7	4	8	6	8	8.84	2.8	4.4	8	756	12	4

(N) - NOT A SEPARATE PAY ITEM, FOR INFORMATION ONLY

SUMMARY OF QUANTITIES

Q-5

LAST REVISION 11-13-13 | DATE PLOTTED => 29-MAY-2014 | TIME PLOTTED => 08:45

BORDER LAST REVISED 7/2/2010 | USERNAME => s130875 | DGN FILE => 0300020450pa005.dgn | RELATIVE BORDER SCALE IS IN INCHES 0 1 2 3 | UNIT 0399 | PROJECT NUMBER & PHASE 03000204501

Dist	COUNTY	ROUTE	POST MILES TOTAL PROJECT	SHEET No.	TOTAL SHEETS
03	But,Col,Gln Sut,Yol,Yub	16,32,45 70,113,162	Var	134	195

REGISTERED CIVIL ENGINEER — DATE: 2-10-14

PLANS APPROVAL DATE: 2-10-14

REGISTERED PROFESSIONAL ENGINEER — ERIC NORMAN SOUZA — No. 75706 — Exp. 06-30-14 — CIVIL — STATE OF CALIFORNIA

THE STATE OF CALIFORNIA OR ITS OFFICERS OR AGENTS SHALL NOT BE RESPONSIBLE FOR THE ACCURACY OR COMPLETENESS OF SCANNED COPIES OF THIS PLAIN SHEET.

BUTTE 162

SHEET NUMBER	LOCATION	PM	TO	PM	DIRECTION	DESCRIPTION	MGS	MGS (7' POST)	REMOVE GUARDRAIL	(N) REMOVE CAA	(N) REMOVE ANCHOR POST	AFTS	AILTS	(N) MGS BURIED POST ANCHOR	MGS END ANCHOR ASSEMBLY (TYPE SFT)	END CAP (¾ WRAP END SECTION)	(N) CONCRETE END BLOCK	MINOR CONCRETE (MINOR STRUCTURE)	MINOR HMA	PLACE HMA (MISCELLANEOUS AREA)	TRANSITION RAILING (TYPE WB-31)	VEGETATION CONTROL (MINOR CONCRETE)	OBJECT MARKER (TYPE L-1)	(N) REMOVE Exist BURIED POST ANCHOR
							LF	LF	LF	EA	EA	EA	EA	EA	EA	EA	EA	CY	TON	SQYD	EA	SQYD	EA	EA
C-23	175	0.03	TO	0.04	WB	BIG BUTTE CREEK BRIDGE (APPROACH)			66	1		1					1	0.74			1	52	1	
C-23	180	1.31	TO	1.32	WB	DRY CREEK BRIDGE (DEPARTURE)	37.5		63	1					1	1	1	0.74			1	52		
C-23	181	1.33	TO	1.34	WB	DRY CREEK BRIDGE (APPROACH)			50	1		1					1	0.74			1	52	1	
C-23	182	8.11	TO	8.13	WB	BIGGS EXTENSION CANAL BRIDGE (APPROACH)	37.5		64	2			2									82		
C-24	183	R9.91	TO	R10.11	WB	THERMALITO AFTERBAY BRIDGE (DEPARTURE)	987.5		1,025	1					1	1	1	1.09			1	565		
C-24	184	R10.25	TO	R10.54	WB	THERMALITO AFTERBAY BRIDGE (APPROACH)	1,462.5		1,525	1		1					1	1.09			1	850	1	
C-25	184A	15.82	TO	15.85	WB	JCT RTE 70	100.0		138	2		1			1	1							1	
C-25	185	16.99	TO	17.03	WB	BETWEEN RAILROAD TRACKS ADN LINCOLN ST	162.5		200	2		1			1	1							1	
C-25	186	19.26	TO	19.27	WB	WEST OF ARBOL AVE	112.5		100	2			1		1	1								
C-25	187	19.28	TO	19.29	WB	EAST OF ARBOL AVE	137.5		175	2			1		1	1								
C-26	188	21.49	TO	21.59	WB	BETWEEN RIDGEVIEW LN AND QUINCY PL	437.5		530	2		1	1										1	
C-27	189	23.14	TO	23.17	WB	EAST OF OLD OLIVE HWY	187.5		188	1				1	1	1							1	1
C-27	190	26.85	TO	26.87	WB	MIDDLE FORK FEATHER RIVER BRIDGE (DEPARTURE)			77				1				1	1.15			1			
C-27	191	27.21	TO	27.22	WB	MIDDLE FORK FEATHER RIVER BRIDGE (APPROACH)			63	1	1	1					1	1.15			1		1	
C-28	192	27.28	TO	27.34	WB	MIDDLE FORK FEATHER RIVER BRIDGE (APPROACH)		200.0	300	2			2											
C-28	193	27.45	TO	27.48	WB	EAST OF MIDDLE FORK FEATHER RIVER BRIDGE	125.0		200	2		2											1	
C-28	194	27.63	TO	27.78	WB	EAST OF MIDDLE FORK FEATHER RIVER BRIDGE	737.5		775	1		1		1									1	1
C-28	195	27.80	TO	27.92	WB	EAST OF MIDDLE FORK FEATHER RIVER BRIDGE	600.0		650	1			1	1									1	1
C-28	196	27.97	TO	28.08	WB	WEST OF SIMMONS RD	525.0		575	1			1	1										1
C-29	197	28.14	TO	28.79	WB	NEAR SIMMONS RD	3,437.5		3,538	2			2											
C-29	198	28.86	TO	29.00	WB	EAST OF SIMMONS RD	650.0		738	2		1	1										1	
C-29	199	29.03	TO	29.06	WB	BETWEEN SIMMONS RD AND CANYON CREEK BRIDGE	87.5		163	2		2											1	
C-29	200	29.09	TO	29.26	WB	BETWEEN SIMMONS RD AND CANYON CREEK BRIDGE	837.5		875	1		1		1									1	1
C-29	201	29.30	TO	29.67	WB	BETWEEN SIMMONS RD AND CANYON CREEK BRIDGE	1,975.0		1,975	1				1	1	1							1	1
C-30	202	29.69	TO	29.95	WB	CANYON CREEK BRIDGE (DEPARTURE)		1,362.5	1,388					1			1	1.24	1.4	2.2	1			1
C-30	203	30.12	TO	30.14	WB	CANYON CREEK BRIDGE (APPROACH)			64	1	1	1					1	1.24	1.4	2.2	1		1	
C-31	204	30.88	TO	30.92	WB	BETWEEN RATCHEL MOUNTAIN DRIVE AND FOREMAN CREEK RD	200.0		250	1			1	1									1	1
C-31	205	30.98	TO	31.02	WB	FOREMAN CREEK RD	262.5		266					2										2
						SUBTOTAL	13,100.0	1,562.5	16,021	36	2	15	14	10	8	8	9	9.18	2.8	4.4	9	1,653	17	10

(N) - NOT A SEPARATE PAY ITEM, FOR INFORMATION ONLY

SUMMARY OF QUANTITIES

Q-6

STATE OF CALIFORNIA - DEPARTMENT OF TRANSPORTATION — Caltrans® — TRAFFIC

FUNCTIONAL SUPERVISOR: STEPHEN WRIGHT

CALCULATED-DESIGNED BY: AL G. CHIN

CHECKED BY: ERIC SOUZA

REVISED BY

DATE REVISED

LAST REVISION: DATE PLOTTED => 29-MAY-2014; TIME PLOTTED => 08:45; 11-13-13

BORDER LAST REVISED 7/2/2010

USERNAME => s130875

DGN FILE => 0300020450pa006.dgn

RELATIVE BORDER SCALE IS IN INCHES 0 1 2 3

UNIT 0399

PROJECT NUMBER & PHASE 03000204501

Dist	COUNTY	ROUTE	POST MILES TOTAL PROJECT	SHEET No.	TOTAL SHEETS
03	But,Col,Gln Sut,Yol,Yub	16,32,45 70,113,162	Var	135	195

REGISTERED CIVIL ENGINEER — DATE 2-10-14

PLANS APPROVAL DATE 2-10-14

REGISTERED PROFESSIONAL ENGINEER — ERIC NORMAN SOUZA No. 75706 Exp. 06-30-14 CIVIL — STATE OF CALIFORNIA

THE STATE OF CALIFORNIA OR ITS OFFICERS OR AGENTS SHALL NOT BE RESPONSIBLE FOR THE ACCURACY OR COMPLETENESS OF SCANNED COPIES OF THIS PLAN SHEET.

COLUSA 16

SHEET NUMBER	LOCATION	PM	TO	PM	DIRECTION	DESCRIPTION	MGS	MGS (7' POST)	REMOVE GUARDRAIL	(N) REMOVE CAA	(N) REMOVE ANCHOR POST	AFTS	AILTS	(N) MGS BURIED POST ANCHOR	MGS END ANCHOR ASSEMBLY (TYPE SFT)	END CAP (¾ WRAP END SECTION)	(N) CONCRETE END BLOCK	MINOR CONCRETE (MINOR STRUCTURE)	MINOR HMA	PLACE HMA (MISCELLANEOUS AREA)	TRANSITION RAILING (TYPE WB-31)	OBJECT MARKER (TYPE L-1)	(N) REMOVE Exist BURIED POST ANCHOR
							LF	LF	LF	EA	EA	EA	EA	EA	EA	EA	EA	CY	TON	SQYD	EA	EA	EA
C-32	206	3.15	TO	R3.35	EB	BEAR CREEK (APPROACH)	975.0		1,040	1	1	1					1	1.37	2.1	2.2	1	1	
C-32	207	R3.36	TO	R3.37	EB	BEAR CREEK (DEPARTURE)	37.5		66					1			1	1.37	2.1	2.2	1		1
C-32	208	3.60	TO	3.67	EB	BETWEEN BEAR CREEK BRIDGE AND BEAR CREEK BRIDGE	337.5		340	1				1	1	1						1	1
C-33	209	R4.31	TO	R4.32	EB	BEAR CREEK BRIDGE (APPROACH)			69	1	1	1					1	1.37	2.1	2.2	1	1	
C-33	210	R4.39	TO	R4.40	EB	BEAR CREEK BRIDGE (DEPARTURE)	37.5		66	1					1	1	1	1.37	2.1	2.2	1		
C-34	211	4.74	TO	5.10	EB	BETWEEN BEAR CREEK BRIDGE AND YOLO COUNTY LINE	1,862.5		1,900	1		1		1								1	1
C-34	212	5.25	TO	5.84	EB	BETWEEN BEAR CREEK BRIDGE AND YOLO COUNTY LINE	3,075.0		3,112	2		1			1	1						1	
C-35	213	6.06	TO	6.32	EB	BETWEEN BEAR CREEK BRIDGE AND YOLO COUNTY LINE	1,325.0		1,413	2		1	1									1	
C-35	214	6.33	TO	6.37	EB	BETWEEN BEAR CREEK BRIDGE AND YOLO COUNTY LINE	175.0		228	1			1	1									1
C-35	215	6.56	TO	6.68	EB	BETWEEN BEAR CREEK BRIDGE AND YOLO COUNTY LINE	637.5		689	1			1	1								1	1
C-35	216	6.71	TO	6.90	EB	BETWEEN BEAR CREEK BRIDGE AND YOLO COUNTY LINE		975.0	1,013	2		1			1	1						1	
C-35	217	7.18	TO	7.26	EB	BETWEEN BEAR CREEK BRIDGE AND YOLO COUNTY LINE	350.0		403	1			1	1									1
C-32	218	R3.34	TO	R3.35	WB	BEAR CREEK BRIDGE (DEPARTURE)	37.5		66	1					1	1	1	1.37	2.1	2.2	1		
C-32	219	R3.36	TO	R3.50	WB	BEAR CREEK BRIDGE (APPROACH)	650.0		725	1	1	1					1	1.37	2.1	2.2	1	1	
C-32	220	R3.55	TO	3.69	WB	BETWEEN BEAR CREEK BRIDGE AND BEAR CREEK BRIDGE	712.5		740	2		1			1	1						1	
C-33	221	3.94	TO	4.21	WB	BETWEEN BEAR CREEK BRIDGE AND BEAR CREEK BRIDGE	1,462.5		1,463	1				1	1	1						1	1
C-33	222	R4.28	TO	R4.32	WB	BEAR CREEK BRIDGE (DEPARTURE)	187.5		214					1			1	1.37	2.1	2.2	1		1
C-33	223	R4.39	TO	R4.40	WB	BEAR CREEK BRIDGE (APPROACH)	37.5		66		1			1			1	1.37	2.1	2.2	1	1	1
						SUBTOTAL	11,900.0	975.0	13,613	19	4	8	4	9	7	7	8	10.96	16.8	17.6	8	12	9

(N) - NOT A SEPARATE PAY ITEM, FOR INFORMATION ONLY

SUMMARY OF QUANTITIES

Q-7

CALCULATED-DESIGNED BY: AL G. CHIN
CHECKED BY: ERIC SOUZA
FUNCTIONAL SUPERVISOR: STEPHEN WRIGHT
REVISED BY | DATE REVISED

STATE OF CALIFORNIA - DEPARTMENT OF TRANSPORTATION
Caltrans® TRAFFIC

LAST REVISION 11-13-13 | DATE PLOTTED => 29-MAY-2014 | TIME PLOTTED => 08:45

Dist	COUNTY	ROUTE	POST MILES TOTAL PROJECT	SHEET No.	TOTAL SHEETS
03	But,Col,Gln Sut,Yol,Yub	16,32,45 70,113,162	Var	136	195

2-10-14
REGISTERED CIVIL ENGINEER DATE

2-10-14
PLANS APPROVAL DATE

REGISTERED PROFESSIONAL ENGINEER
ERIC NORMAN SOUZA
No. 75706
Exp. 06-30-14
CIVIL
STATE OF CALIFORNIA

THE STATE OF CALIFORNIA OR ITS OFFICERS OR AGENTS SHALL NOT BE RESPONSIBLE FOR THE ACCURACY OR COMPLETENESS OF SCANNED COPIES OF THIS PLAN SHEET.

COLUSA 45

SHEET NUMBER	LOCATION	PM	TO	PM	DIRECTION	DESCRIPTION	MGS	MGS (7' POST)	REMOVE GUARDRAIL	(N) REMOVE CAA	AFTS	AILTS	MGS END ANCHOR ASSEMBLY (TYPE SFT)	END CAP (¾ WRAP END SCETION)	(N) CONCRETE END BLOCK	MINOR CONCRETE (MINOR STRUCTURE)	TRANSITION RAILING (TYPE WB-31)	OBJECT MARKER (TYPE L-1)
							LF	LF	LF	EA	EA	EA	EA	EA	EA	CY	EA	EA
C-36	224	4.03	TO	4.05	NB	HIGH DITCH BRIDGE (APPROACH)			65	1	1						1	1
C-36	226	6.83	TO	6.84	NB	WILKINS SLOUGH BRIDGE (APPROACH)			63	1	1						1	1
C-36	227	6.86	TO	6.87	NB	WILKINS SLOUGH BRIDGE (DEPARTURE)	37.5		64	1			1	1			1	
C-37	228	19.29	TO	19.32	NB	ELLIOT CREEK BRIDGE	100.0		150	2		1	1	1				
C-37	229	20.32	TO	20.34	NB	SOUTH OF NEVA AVE	50.0		76	2	1		1	1				1
C-37	230	20.42	TO	20.43	NB	BETWEEN NEVA AVE AND NORTH AVE	25.0		63	2	1		1	1				1
C-37	231	20.59	TO	20.61	NB	NORTH OF NORTH AVE	50.0		88	2		1	1	1				
C-38	232	21.32	TO	21.33	NB	NORTH OF BROWN RD	37.5		76	2	1		1	1				1
C-38	232A	25.00	TO	25.02	NB	NORTH OF MAXWELL RD	87.5		127	2	1		1	1				1
C-38	233	28.23	TO	28.24	NB	SOUTH OF PACKER RD	62.5		102	2	1		1	1				1
C-38	234	28.90	TO	28.91	NB	NORTH OF PACKER RD			65	1		1			1	2.35	1	
C-39	234A	30.24	TO	30.25	NB	SOUTH OF FERRY RD	50.0		92	2	1		1	1				
C-39	234B	30.67	TO	30.70	NB	NORTH OF FERRY RD		87.5	127	2	1		1	1				1
C-39	234C	31.23	TO	31.24	NB	SOUTH OF DODGE RD	100.0		92	2			2	2				
C-36	235	4.03	TO	4.05	SB	HIGH DITCH BRIDGE (DEPARTURE)	37.5		63	1			1	1			1	
C-36	236	4.06	TO	4.08	SB	HIGH DITCH BRIDGE (APPROACH)	87.5		113	1	1						1	1
C-36	237	6.83	TO	6.84	SB	WILKINS SLOUGH BRIDGE (DEPARTURE)	37.5		69	1			1	1			1	
C-36	238	6.86	TO	6.87	SB	WILKINS SLOUGH BRIDGE (APPROACH)			63	1	1						1	1
C-37	239	19.31	TO	19.34	SB	ELLIOT CREEK BRIDGE	87.5		129	2	1		1	1				1
C-37	240	20.33	TO	20.35	SB	SOUTH OF NEVA AVE	37.5		88	2		1	1	1				
C-37	240A	20.43	TO	20.44	SB	BETWEEN NEVA AVE AND NORTH AVE	50.0		40	2			2	2				
C-37	241	20.60	TO	20.61	SB	NORTH OF NORTH AVE	50.0		52	2			2	2				
C-38	242	R21.91	TO	R21.94	SB	SOUTH OF HARBISON RD		87.5	126	2	1		1	1				1
C-38	242A	25.00	TO	25.02	SB	NORTH OF MAXWELL RD		87.5	127	2	1		1	1				1
C-38	242B	28.23	TO	28.24	SB	SOUTH OF PACKER RD	87.5		90	2			2	2				
C-38	242C	28.90	TO	28.92	SB	NORTH OF PACKER RD		87.5	88	2			2	2				
C-39	242D	30.24	TO	30.25	SB	SOUTH OF FERRY RD		50.0	92	2	1		1	1				1
C-39	242E	30.67	TO	30.70	SB	NORTH OF FERRY RD		87.5	128	2	1		1	1				1
C-39	242F	31.23	TO	31.25	SB	SOUTH OF FERRY RD	62.5		92	2	1		1	1				1
						SUBTOTAL	1,137.5	400.0	2,610	50	17	4	29	29	1	2.35	8	16

(N) - NOT A SEPARATE PAY ITEM, FOR INFORMATION ONLY

SUMMARY OF QUANTITIES
Q-8

CALCULATED-DESIGNED BY: AL G. CHIN
CHECKED BY: ERIC SOUZA
REVISED BY
DATE REVISED
FUNCTIONAL SUPERVISOR: STEPHEN WRIGHT
STATE OF CALIFORNIA - DEPARTMENT OF TRANSPORTATION
Caltrans®
TRAFFIC

LAST REVISION 11-13-13
DATE PLOTTED => 29-MAY-2014
TIME PLOTTED => 08:45

BORDER LAST REVISED 7/2/2010
USERNAME => s130875
DGN FILE => 0300020450pa008.dgn
RELATIVE BORDER SCALE IS IN INCHES 0 1 2 3
UNIT 0399
PROJECT NUMBER & PHASE 03000204501

Dist	COUNTY	ROUTE	POST MILES TOTAL PROJECT	SHEET No.	TOTAL SHEETS
03	But,Col,Gln Sut,Yol,Yub	16,32,45 70,113,162	Var	137	195

REGISTERED CIVIL ENGINEER — DATE 2-10-14

PLANS APPROVAL DATE 2-10-14

REGISTERED PROFESSIONAL ENGINEER — ERIC NORMAN SOUZA — No. 75706 — Exp. 06-30-14 — CIVIL — STATE OF CALIFORNIA

THE STATE OF CALIFORNIA OR ITS OFFICERS OR AGENTS SHALL NOT BE RESPONSIBLE FOR THE ACCURACY OR COMPLETENESS OF SCANNED COPIES OF THIS PLAIN SHEET.

YUBA 70

SHEET NUMBER	LOCATION	PM	TO	PM	DIRECTION	DESCRIPTION	MGS	REMOVE GUARDRAIL	REMOVE CAA	AFTS	AILTS	MGS END ANCHOR ASSEMBLY (TYPE SFT)	END CAP (¾ WRAP END SECTION)	VEGETATION CONTROL (MINOR CONCRETE)	OBJECT MARKER (TYPE L-1)
							LF	LF	(N) EA	EA	EA	EA	EA	SQYD	EA
C-39	242G	25.75	TO	25.78	EB	PRIVATE ROAD	100.0	145	2		1	1	1	89	
C-39	242H	25.75	TO	25.79	WB	PRIVATE ROAD	125.0	165	2	1		1	1	96	1
						SUBTOTAL	225.0	310	4	1	1	2	2	185	1

(N) - FOR INFORMATION ONLY, NOT A SEPARATE PAY ITEM.

SUMMARY OF QUANTITIES

Q-9

STATE OF CALIFORNIA - DEPARTMENT OF TRANSPORTATION
Caltrans
TRAFFIC

FUNCTIONAL SUPERVISOR: STEPHEN WRIGHT

CALCULATED-DESIGNED BY: AL G. CHIN
CHECKED BY: ERIC SOUZA

REVISED BY	DATE REVISED

LAST REVISION 11-13-13 | DATE PLOTTED => 29-MAY-2014 | TIME PLOTTED => 08:45

Dist	COUNTY	ROUTE	POST MILES TOTAL PROJECT	SHEET No.	TOTAL SHEETS
03	But,Col,Gln Sut,Yol,Yub	16,32,45 70,113,162	Var	138	195

Raimund Yambao 2-10-14
REGISTERED CIVIL ENGINEER DATE

2-10-14
PLANS APPROVAL DATE

REGISTERED PROFESSIONAL ENGINEER
RAIMUND J. YAMBAO
No. 80379
Exp. 03-31-15
CIVIL
STATE OF CALIFORNIA

THE STATE OF CALIFORNIA OR ITS OFFICERS OR AGENTS SHALL NOT BE RESPONSIBLE FOR THE ACCURACY OR COMPLETENESS OF SCANNED COPIES OF THIS PLAN SHEET.

GLENN 32

SHEET NUMBER	LOCATION NUMBER	BEG PM	TO	END PM	DIRECTION	DESCRIPTION	MGS	REMOVE GUARDRAIL	AFTS	AILTS	MGS END ANCHOR ASSEMBLY (TYPE SFT)	END CAP (3/4 WRAP END SECTION)	CONCRETE END BLOCK (N)	MINOR CONCRETE (MINOR STRUCTURE)	TRANSITION RAILING (TYPE WB-31)	REMOVE CABLE ANCHOR ASSEMBLY (N)
							LF	LF	EA	EA	EA	EA	EA	CY	EA	EA
C-40	243	L0.00	TO	L0.01	EB	BRIDGE NO 11-0077 ROUTE 32/5 SEPARATION (APPROACH)		75		1			1	1.1	1	1
C-40	244	L0.03	TO	L0.05	EB	BRIDGE NO 11-0077 ROUTE 32/5 SEPARATION (DEPARTURE)				1			1	1.1	1	
C-40	245	2.23	TO	2.25	EB	BRIDGE NO 11-0095 TEHAMA-COLUSA CANAL BRIDGE (APPROACH)		63	1			1	1	1	1	1
C-40	246	2.26	TO	2.28	EB	BRIDGE NO 11-0095 TEHAMA-COLUSA CANAL BRIDGE (DEPARTURE)	37.5	63			1	1	1	1	1	1
C-40	247	R5.22	TO	R5.24	EB	BRIDGE NO 11-0029 STONY CREEK BRIDGE (APPROACH)		63	1				1	1.1	1	
C-40	248	R5.53	TO	R5.55	EB	BRIDGE NO 11-0029 STONY CREEK BRIDGE (DEPARTURE)		63	1				1	1.1	1	
C-40	249	9.56	TO	9.58	EB	BRIDGE NO 11-0028 GLENN-COLUSA CANAL BRIDGE (APPROACH)		38	1			1	1	1	1	1
C-40	250	L0.03	TO	L0.05	WB	BRIDGE NO 11-0077 ROUTE 32/5 SEPARATION (APPROACH)		75								1
C-40	251	2.23	TO	2.25	WB	BRIDGE NO 11-0095 TEHAMA-COLUSA CANAL BRIDGE (DEPARTURE)	37.5	63			1	1	1	1	1	1
C-40	252	2.26	TO	2.28	WB	BRIDGE NO 11-0095 TEHAMA-COLUSA CANAL BRIDGE (APPROACH)		63	1			1	1	1	1	1
C-40	253	R5.22	TO	R5.24	WB	BRIDGE NO 11-0029 STONY CREEK BRIDGE (DEPARTURE)		63	1				1	1.1	1	1
C-40	254	R5.53	TO	R5.55	WB	BRIDGE NO 11-0029 STONY CREEK BRIDGE (APPROACH)		63	1				1	1.1	1	1
C-40	255	9.56	TO	9.58	WB	BRIDGE NO 11-0028 GLENN-COLUSA CANAL BRIDGE (DEPARTURE)	12.5	38			1	1	1	1	1	1
						SUBTOTAL	87.5	725	7	2	3	6	12	12.6	12	10

(N) - NOT A SEPARATE PAY ITEM, FOR INFORMATION ONLY

SUMMARY OF QUANTITIES

NO SCALE

Q-10

STATE OF CALIFORNIA - DEPARTMENT OF TRANSPORTATION
Caltrans DESIGN

FUNCTIONAL SUPERVISOR: DEANN SPANGLER
CALCULATED-DESIGNED BY: GARY DEKENS
CHECKED BY: RAIMUND YAMBAO
REVISED BY
DATE REVISED

LAST REVISION 01-27-14
DATE PLOTTED => 29-MAY-2014
TIME PLOTTED => 08:45

BORDER LAST REVISED 7/2/2010
USERNAME => s130875
DGN FILE => 0300020450pa010.dgn
RELATIVE BORDER SCALE IS IN INCHES 0 1 2 3
UNIT 0327
PROJECT NUMBER & PHASE 03000204501

Dist	COUNTY	ROUTE	POST MILES TOTAL PROJECT	SHEET No.	TOTAL SHEETS
03	But,Col,Gln Sut,Yol,Yub	16,32,45 70,113,162	Var	139	195

Raimund Yambao 2-10-14
REGISTERED CIVIL ENGINEER DATE

2-10-14
PLANS APPROVAL DATE

RAIMUND J. YAMBAO No. 80379 Exp. 03-31-15 CIVIL — REGISTERED PROFESSIONAL ENGINEER — STATE OF CALIFORNIA

THE STATE OF CALIFORNIA OR ITS OFFICERS OR AGENTS SHALL NOT BE RESPONSIBLE FOR THE ACCURACY OR COMPLETENESS OF SCANNED COPIES OF THIS PLAN SHEET.

GLENN 45

SHEET	LOCATION	BEG PM	TO	END PM	DIRECTION	DESCRIPTION	MGS	REMOVE GUARDRAIL	AFTS	AILTS	MGS END ANCHOR ASSEMBLY (TYPE SFT)	MGS TERMINAL ANCHOR ASSEMBLY (Type CA)	END CAP (3/4 WRAP END SECTION)	ADJUST GUARDRAIL	CONCRETE END BLOCK (N)	MINOR CONCRETE (MINOR STRUCTURE)	TRANSITION RAILING (TYPE WB-31)	MGS (7' POSTS)	REMOVE CABLE ANCHOR ASSEMBLY (N)	MGS TRANSITION TO MBGR (N)
							LF	LF	EA	EA	EA	EA	EA	LF	EA	CY	EA	LF	EA	EA
C-41	256	0.63	TO	0.78	NB	SOUTH OF RD 66		815	2									740.0	2	
C-41	257	0.99	TO	1.03	NB	NORTH OF RD 66		250		2								150.0	2	
C-41	258	8.19	TO	8.21	NB	NORTH OF RD 52	25.0	125		2									2	
C-42	259	9.77	TO	9.83	NB	SOUTH OF SIDDS RD	300.0	375	1			1				0.35			1	1
C-42	260	9.83	TO	10.06	NB	SOUTH OF SIDDS RD	1075.0	1113	1										1	1
C-42	261	10.07	TO	10.14	NB	SOUTH OF SIDDS RD		413		2								312.5	2	
C-42	262	R20.63	TO	R20.65	NB	BRIDGE NO 11-0038 STONY CREEK (APPROACH)		63	1						1	1	1		1	
C-42	263	R20.75	TO	R20.77	NB	BRIDGE NO 11-0038 STONY CREEK (DEPARTURE)		63	1						1	1	1		1	
C-41	264	0.00	TO	0.02	SB	NORTH OF FERRY RD	12.5	63		1	1		1						2	
C-41	265	0.54	TO	0.58	SB	BRIDGE NO 11-0099 PUMPHOUSE INTAKE (DEPARTURE		63		1							1		1	
C-41	266	0.58	TO	0.60	SB	BRIDGE NO 11-0099 PUMPHOUSE INTAKE (APPROACH)		63		1							1		1	
C-41	267	2.38	TO	2.47	SB	SOUTH OF RD 62	400.0	500		2									2	
C-41	268	4.37	TO	4.39	SB	SOUTH OF WILLOW AVE		125		2								25.0	2	
C-42	269	9.79	TO	9.83	SB	SOUTH OF SIDDS RD		200		1		1				0.35		100.0	2	1
C-42	270	9.83	TO	9.88	SB	SOUTH OF SIDDS RD		313		1								275.0	2	1
C-42	271	10.07	TO	10.13	SB	SOUTH OF SIDDS RD		425			2		2	25				425.0	2	
C-42	272	R20.63	TO	R20.65	SB	BRIDGE NO 11-0038 STONY CREEK (DEPARTURE)		63	1						1	1	1		1	
C-42	273	R20.75	TO	R20.77	SB	BRIDGE NO 11-0038 STONY CREEK (APPROACH)		63	1						1	1	1		1	
						SUBTOTAL	1812.5	5091	8	15	3	2	3	25	4	4.7	6	2027.5	28	4

(N) - NOT A SEPARATE PAY ITEM, FOR INFORMATION ONLY

SUMMARY OF QUANTITIES

NO SCALE

Q-11

STATE OF CALIFORNIA - DEPARTMENT OF TRANSPORTATION
Caltrans®
DESIGN

FUNCTIONAL SUPERVISOR
DEANN SPANGLER

CALCULATED-DESIGNED BY
GARY DEKENS

CHECKED BY
RAIMUND YAMBAO

REVISED BY

DATE REVISED

LAST REVISION 01-27-14
DATE PLOTTED => 29-MAY-2014
TIME PLOTTED => 08:45

BORDER LAST REVISED 7/2/2010

USERNAME => s130875
DGN FILE => 0300020450pa011.dgn

RELATIVE BORDER SCALE IS IN INCHES 0 1 2 3

UNIT 0327

PROJECT NUMBER & PHASE 03000204501

Dist	COUNTY	ROUTE	POST MILES TOTAL PROJECT	SHEET No.	TOTAL SHEETS
03	But,Col,Gln Sut,Yol,Yub	16,32,45 70,113,162	Var	140	195

Raimund Yambao 2-10-14
REGISTERED CIVIL ENGINEER DATE

2-10-14
PLANS APPROVAL DATE

REGISTERED PROFESSIONAL ENGINEER
RAIMUND J. YAMBAO
No. 80379
Exp. 03-31-15
CIVIL
STATE OF CALIFORNIA

THE STATE OF CALIFORNIA OR ITS OFFICERS OR AGENTS SHALL NOT BE RESPONSIBLE FOR THE ACCURACY OR COMPLETENESS OF SCANNED COPIES OF THIS PLAN SHEET.

GLENN 162

SHEET NUMBER	LOCATION NUMBER	BEG PM	TO	END PM	DIRECTION	DESCRIPTION	MGS	REMOVE GUARDRAIL	AFTS	AILTS	MGS END ANCHOR ASSEMBLY (TYPE SFT)	END CAP (3/4 WRAP END SECTION)	MINOR CONCRETE (MINOR STRUCTURE)	TRANSITION RAILING (TYPE WB-31)	MGS (7' POST)	REMOVE CABLE ANCHOR ASSEMBLY (N)	MGS BURIED POST ANCHOR (N)	MGS TRANSITION TO MBGR (N)	REMOVE BURIED POST ANCHOR (N)
							LF	LF	EA	EA	EA	EA	CY	EA	LF	EA	EA	EA	EA
C-43	274	42.19	TO	42.21	EB	SOUTH OF RD 305	137.5	138								2	2		2
C-43	275	42.93	TO	42.95	EB	SOUTH OF RD 305	50.0	125	2							2			
C-43	276	44.30	TO	44.32	EB	SOUTH OF RD 305	50.0	125	2							2			
C-43	277	R45.09	TO	R45.10	EB	BRIDGE NO 11-0087 STONY CREEK BRIDGE (APPROACH)	37.5	75	1							1		1	
C-43	278	R45.19	TO	R45.21	EB	BRIDGE NO 11-0087 STONY CREEK BRIDGE (DEPARTURE)	57.8	88			1	1	1.1	1		1			
C-44	279	48.76	TO	48.79	EB	WEST OF RD 303	62.5	138	2										
C-44	280	48.95	TO	48.98	EB	WEST OF RD 303	50.0	125	2							2			
C-44	281	49.26	TO	49.30	EB	WEST OF RD 303	75.0	150	2							2			
C-44	282	49.93	TO	49.95	EB	WEST OF RD 303		125	1		1	1			75	2			
C-44	283	51.07	TO	51.10	EB	EAST OF RD 303		125	1		1	1			75	2			
C-44	284	51.68	TO	51.70	EB	BRIDGE NO 11-0088 NYE CREEK BRIDGE	75.0	125	1		1	1				2			
C-44	285	53.68	TO	53.70	EB	WEST OF BRIDGE NO 11-0096 TEHAMA-COLUSA CANAL		113		1					62.5	1	1		1
C-44	286	54.17	TO	54.20	EB	WEST OF BRIDGE NO 11-0096 TEHAMA-COLUSA CANAL	25.0	125		2						2			
C-44	289	61.94	TO	61.97	EB	WEST OF RD BB	25.0	125		2						2			
C-45	290	62.36	TO	62.37	EB	BRIDGE NO 11-0090 SOUTH FORK WILLOW CREEK (APPROACH)		63	1					1		1			
C-45	291	62.39	TO	62.41	EB	BRIDGE NO 11-0090 SOUTH FORK WILLOW CREEK (DEPARTURE)		63	1					1		1			
						SUBTOTAL	645.3	1926	16	5	4	4	1.1	3	212.5	27	3	1	3

(N) - NOT A SEPARATE PAY ITEM, FOR INFORMATION ONLY

SUMMARY OF QUANTITIES

NO SCALE

Q-12

STATE OF CALIFORNIA - DEPARTMENT OF TRANSPORTATION
Caltrans®
DESIGN
FUNCTIONAL SUPERVISOR: DEANN SPANGLER
CALCULATED-DESIGNED BY: GARY DEKENS
CHECKED BY: RAIMUND YAMBAO
REVISED BY
DATE REVISED

LAST REVISION 01-27-14
DATE PLOTTED => 29-MAY-2014
TIME PLOTTED => 08:45

BORDER LAST REVISED 7/2/2010
USERNAME => s130875
DGN FILE => 0300020450pa012.dgn
RELATIVE BORDER SCALE IS IN INCHES 0 1 2 3
UNIT 0327
PROJECT NUMBER & PHASE 03000204501

Dist	COUNTY	ROUTE	POST MILES TOTAL PROJECT	SHEET No.	TOTAL SHEETS
03	But,Col,Gln Sut,Yol,Yub	16,32,45 70,113,162	Var	141	195

Raimund Yambao 2-10-14
REGISTERED CIVIL ENGINEER DATE

2-10-14
PLANS APPROVAL DATE

REGISTERED PROFESSIONAL ENGINEER
RAIMUND J. YAMBAO
No. 80379
Exp. 03-31-15
CIVIL
STATE OF CALIFORNIA

THE STATE OF CALIFORNIA OR ITS OFFICERS OR AGENTS SHALL NOT BE RESPONSIBLE FOR THE ACCURACY OR COMPLETENESS OF SCANNED COPIES OF THIS PLAN SHEET.

GLENN 162

SHEET NUMBER	LOCATION NUMBER	BEG PM	TO	END PM	DIRECTION	DESCRIPTION	MGS	REMOVE GUARDRAIL	AFTS	AILTS	MGS END ANCHOR ASSEMBLY (TYPE SFT)	END CAP (3/4 WRAP END SECTION)	ADJUST GUARDRAIL	CONCRETE END BLOCK (N)	MINOR CONCRETE (MINOR STRUCTURE)	TRANSITION RAILING (TYPE WB-31)	MGS (7' POSTS)	REMOVE CABLE ANCHOR ASSEMBLY (N)
							LF	LF	EA	EA	EA	EA	LF	EA	CY	EA	LF	EA
C-45	292	67.19	TO	67.20	EB	BRIDGE NO 11-0009 CENTRAL IRRIGATION CANAL (APPROACH)	12.5	75	1					1	1.1	1		1
C-45	293	67.21	TO	67.23	EB	BRIDGE NO 11-0009 CENTRAL IRRIGATION CANAL (DEPARTURE)		63	1					1	1.1	1		1
C-45	294	68.14	TO	68.16	EB	BRIDGE NO 11-0011 WALKER CREEK (APPROACH)		88	1					1	1.1	1		1
C-45	295	68.18	TO	68.20	EB	BRIDGE NO 11-0011 WALKER CREEK (DEPARTURE)	37.5	63			1			1	1.1	1		1
C-46	296	70.58	TO	70.60	EB	BRIDGE NO 11-0012 QUINT CANAL (APPROACH)		63	1					1	1.1	1		1
C-46	297	70.61	TO	70.63	EB	BRIDGE NO 11-0012 QUINT CANAL (DEPARTURE)		63	1					1	1.1	1		1
C-46	298	73.54	TO	73.55	EB	BRIDGE NO 11-0013 BRUSH CANAL (APPROACH)		50	1					1	1.1	1		1
C-46	299	73.56	TO	73.58	EB	BRIDGE NO 11-0013 BRUSH CANAL (DEPARTURE)	25.0	63	1		1	1						2
C-46	300	74.51	TO	74.53	EB	BRIDGE NO 11 0061 BONDURANT SLOUGH (APPROACH)		63	1					1	1.1	1		1
C-46	301	74.53	TO	74.56	EB	BRIDGE NO 11-0061 BONDURANT SLOUGH (DEPARTURE)	112.5	163						2	2.2	2		
C-46	302	74.57	TO	74.58	EB	BRIDGE NO 11- 0059 COLUSA DRAIN CANAL (DEPARTURE)							25					
C-46	303	76.24	TO	76.25	EB	BRIDGE NO 11-0035 PRINCETON-CODORA CANAL (APPROACH)		50	1					1	1.1	1		1
C-47	304	76.70	TO	76.71	EB	BRIDGE NO 11-0017 SACRAMENTO RIVER (APPROACH)	25.0	38			1	1		1	1.2	1		1
C-47	305	77.55	TO	77.67	EB	SOUTH OF EUREKA ST		675	1	1							587.5	2
						SUBTOTAL	212.5	1516	10	1	3	2	25	12	13.3	12	587.5	14

(N) - NOT A SEPARATE PAY ITEM, FOR INFORMATION ONLY

SUMMARY OF QUANTITIES

NO SCALE

Q-13

STATE OF CALIFORNIA - DEPARTMENT OF TRANSPORTATION
Caltrans
DESIGN

FUNCTIONAL SUPERVISOR: DEANN SPANGLER

CALCULATED-DESIGNED BY: GARY DEKENS
CHECKED BY: RAIMUND YAMBAO

REVISED BY
DATE REVISED

LAST REVISION 01-28-14
DATE PLOTTED => 29-MAY-2014
TIME PLOTTED => 08:45

BORDER LAST REVISED 7/2/2010

USERNAME => s130875
DGN FILE => 0300020450pa013.dgn

RELATIVE BORDER SCALE IS IN INCHES 0 1 2 3

UNIT 0327

PROJECT NUMBER & PHASE 03000204501

Dist	COUNTY	ROUTE	POST MILES TOTAL PROJECT	SHEET No.	TOTAL SHEETS
03	But,Col,Gln Sut,Yol,Yub	16,32,45 70,113,162	Var	142	195

Raimund Yambao 2-10-14
REGISTERED CIVIL ENGINEER DATE

2-10-14
PLANS APPROVAL DATE

REGISTERED PROFESSIONAL ENGINEER
RAIMUND J. YAMBAO
No. 80379
Exp. 03-31-15
CIVIL
STATE OF CALIFORNIA

THE STATE OF CALIFORNIA OR ITS OFFICERS OR AGENTS SHALL NOT BE RESPONSIBLE FOR THE ACCURACY OR COMPLETENESS OF SCANNED COPIES OF THIS PLAIN SHEET.

GLENN 162

SHEET NUMBER	LOCATION NUMBER	BEG PM	TO	END PM	DIRECTION	DESCRIPTION	MGS	REMOVE GUARDRAIL	AFTS	MGS END ANCHOR ASSEMBLY (TYPE SFT)	END CAP (3/4 WRAP END SECTION)	CONCRETE END BLOCK (N)	MINOR CONCRETE (MINOR STRUCTURE)	TRANSITION RAILING (TYPE WB-31)	REMOVE BRIDGE APPROACH RAILING (TYPE 8)	REMOVE CABLE ANCHOR ASSEMBLY (N)
							LF	LF	EA	EA	EA	EA	CY	EA	LF	EA
C-48	306	79.06	TO	79.07	EB	BRIDGE NO 11-0018 SACRAMENTO RIVER OVERFLOW (APPROACH)		63	1			1	1.1	1		1
C-48	307	79.09	TO	79.10	EB	BRIDGE NO 11-0018 SACRAMENTO RIVER OVERFLOW (DEPARTURE)		63	1			1	1.1	1		1
C-48	308	79.54	TO	79.55	EB	BRIDGE NO 11-0019 SACRAMENTO RIVER OVERFLOW (APPROACH)			1			1	1.4	1	40	
C-48	309	79.57	TO	79.58	EB	BRIDGE NO 11-0019 SACRAMENTO RIVER OVERFLOW (APPROACH)			1			1	1.4	1	50	
C-48	310	79.95	TO	79.96	EB	BRIDGE NO 11-0020 SACRAMENTO RIVER OVERFLOW (APPROACH)	25.0	50		1	1	1	1	1		1
C-48	311	79.97	TO	79.99	EB	BRIDGE NO 11-0020 SACRAMENTO RIVER OVERFLOW (DEPARTURE)		63	1			1	1	1		1
C-48	312	80.01	TO	80.03	EB	BRIDGE NO 11-0021 SACRAMENTO RIVER OVERFLOW (APPROACH)		63	1			1	1	1		1
C-48	313	80.04	TO	80.06	EB	BRIDGE NO 11-0021 SACRAMENTO RIVER OVERFLOW (DEPARTURE)	37.5	63		1	1	1	1	1		1
C-49	314	80.71	TO	80.73	EB	BRIDGE NO 11-0022 ANGELS SLOUGH (APPROACH)		50	1			1	1	1		1
C-49	315	80.75	TO	80.77	EB	BRIDGE NO 11-0022 ANGELS SLOUGH (DEPARTURE)	37.5	63		1	1	1	1	1		1
C-49	316	81.61	TO	81.63	EB	BRIDGE NO 11-0023 SACRAMENTO RIVER OVERFLOW (APPROACH)		63	1			1	1.3	1		1
C-49	317	81.71	TO	81.73	EB	BRIDGE NO 11-0023 SACRAMENTO RIVER OVERFLOW (DEPARTURE)		63	1			1	1.3	1		1
C-49	318	81.84	TO	81.86	EB	BRIDGE NO 11-0031 SACRAMENTO RIVER OVERFLOW (APPROACH)		63	1			1	1	1		1
C-49	319	81.88	TO	81.90	EB	BRIDGE NO 11-0031 SACRAMENTO RIVER OVERFLOW (DEPARTURE)	37.5	63		1	1	1	1	1		1
C-49	320	81.99	TO	82.01	EB	BRIDGE NO 11-0024 CAMPBELL SLOUGH (APPROACH)		63	1			1	1.3	1		1
C-49	321	82.05	TO	82.07	EB	BRIDGE NO 11-0024 CAMPBELL SLOUGH (DEPARTURE)		63	1			1	1.3	1		1
C-50	322	83.65	TO	83.67	EB	BRIDGE NO 11-0032 BIG BUTTE CREEK OVERFLOW (APPROACH)		63	1			1	1.1	1		1
C-50	323	83.69	TO	83.71	EB	BRIDGE NO 11-0032 BIG BUTTE CREEK OVERFLOW (DEPARTURE)		63	1			1	1.1	1		1
						SUBTOTAL	137.5	982	14	4	4	18	20.4	18	90	16

(N) - NOT A SEPARATE PAY ITEM, FOR INFORMATION ONLY

SUMMARY OF QUANTITIES

NO SCALE

Q-14

STATE OF CALIFORNIA - DEPARTMENT OF TRANSPORTATION
Caltrans®
DESIGN

FUNCTIONAL SUPERVISOR
DEANN SPANGLER

CALCULATED-DESIGNED BY
GARY DEKENS

CHECKED BY
RAIMUND YAMBAO

REVISED BY

DATE REVISED

LAST REVISION 01-28-14
DATE PLOTTED => 29-MAY-2014
TIME PLOTTED => 08:45

BORDER LAST REVISED 7/2/2010

USERNAME => s130875
DGN FILE => 0300020450pa014.dgn

RELATIVE BORDER SCALE IS IN INCHES 0 1 2 3

UNIT 0327

PROJECT NUMBER & PHASE 03000204501

Dist	COUNTY	ROUTE	POST MILES TOTAL PROJECT	SHEET No.	TOTAL SHEETS
03	But,Col,Gln Sut,Yol,Yub	16,32,45 70,113,162	Var	143	195

Raimund Yambao 2-10-14
REGISTERED CIVIL ENGINEER DATE

2-10-14
PLANS APPROVAL DATE

RAIMUND J. YAMBAO No. 80379 Exp. 03-31-15 CIVIL — REGISTERED PROFESSIONAL ENGINEER — STATE OF CALIFORNIA

THE STATE OF CALIFORNIA OR ITS OFFICERS OR AGENTS SHALL NOT BE RESPONSIBLE FOR THE ACCURACY OR COMPLETENESS OF SCANNED COPIES OF THIS PLAN SHEET.

GLENN 162

SHEET NUMBER	LOCATION NUMBER	BEG PM	TO	END PM	DIRECTION	DESCRIPTION	MGS	REMOVE GUARDRAIL	AFTS	AILTS	MGS END ANCHOR ASSEMBLY (TYPE SFT)	END CAP (3/4 WRAP END SECTION)	CONCRETE END BLOCK (N)	MINOR CONCRETE (MINOR STRUCTURE)	TRANSITION RAILING (TYPE WB-31)	MGS (7' POST)	REMOVE CABLE ANCHOR ASSEMBLY (N)	MGS BURIED POST ANCHOR (N)	MGS TRANSITION TO MBGR (N)	REMOVE BURIED POST ANCHOR (N)
							LF	LF	EA	EA	EA	EA	EA	CY	EA	LF	EA	EA	EA	EA
C-50	324	83.78	TO	83.80	EB	BRIDGE NO 11-0033 BIG BUTTE CREEK OVERFLOW (APPROACH)		63	1				1	1.1	1		1			
C-50	325	83.84	TO	83.88	EB	BRIDGE NO 11-0033 BIG BUTTE CREEK OVERFLOW (DEPARTURE) & BRIDGE NO 11-0034 BIG BUTTE CREEK OVERFLOW (APPROACH)	150.0	200					2	1.1	2					
C-50	326	83.90	TO	83.92	EB	BRIDGE NO 11-0034 BIG BUTTE CREEK OVERFLOW (DEPARTURE)		63	1				1	1.1	1		1			
C-50	327	84.56	TO	84.57	EB	BRIDGE NO 11-0027 BIG BUTTE CREEK (APPROACH)		63	1				1		1		1			
C-50	328	84.58	TO	84.59	EB	BRIDGE NO 11-0027 BIG BUTTE CREEK (DEPARTURE)	37.5	63			1	1	1	1.1	1		1			
C-43	329	42.16	TO	42.22	WB	SOUTH OF RD 305	250.0	325	2								2			
C-43	330	42.93	TO	42.95	WB	SOUTH OF RD 305	50.0	125	2								2			
C-43	331	44.30	TO	44.32	WB	SOUTH OF RD 305	50.0	125	2								2			
C-43	332	45.02	TO	45.10	WB	BRIDGE NO 11-0087 STONY CREEK BRIDGE (DEPARTURE)	362.5	363			1	1					1		1	
C-43	333	R45.19	TO	R45.21	WB	BRIDGE NO 11-0087 STONY CREEK BRIDGE (APPROACH)		63		1					1		1			
C-44	334	48.95	TO	48.98	WB	WEST OF RD 303	50.0	125	2								2			
C-44	335	49.26	TO	49.30	WB	WEST OF RD 303	75.0	150	2								2			
C-44	336	49.93	TO	49.95	WB	WEST OF RD 303		125	1		1	1				75.0	2			
C-44	337	51.07	TO	51.10	WB	EAST OF RD 303	75.0	125	1		1	1					2			
C-44	338	51.68	TO	51.70	WB	BRIDGE NO 11-0088 NYE CREEK BRIDGE	75.0	125	1		1	1					2			
C-44	339	53.68	TO	53.70	WB	WEST OF BRIDGE NO 11-0096 TEHAMA-COLUSA CANAL	62.5	100	1								1	1		1
C-44	340	54.17	TO	54.20	WB	WEST OF BRIDGE NO 11-0096 TEHAMA-COLUSA CANAL	25.0	125		2							2			
C-44	343	61.94	TO	61.97	WB	WEST OF RD BB	25.0	125		2							2			
C-45	344	62.36	TO	62.37	WB	BRIDGE NO 11-0090 SOUTH FORK WILLOW CREEK (DEPARTURE)		63	1						1		1			
C-45	345	62.39	TO	62.41	WB	BRIDGE NO 11-0090 SOUTH FORK WILLOW CREEK (APPROACH)		63	1						1		1			
						SUBTOTAL	1287.5	2579	19	5	5	5	6	4.4	9	75.0	29	1	1	1

(N) - NOT A SEPARATE PAY ITEM, FOR INFORMATION ONLY

SUMMARY OF QUANTITIES

NO SCALE

Q-15

STATE OF CALIFORNIA - DEPARTMENT OF TRANSPORTATION
DESIGN
Caltrans®

FUNCTIONAL SUPERVISOR: DEANN SPANGLER
CALCULATED-DESIGNED BY: GARY DEKENS
CHECKED BY: RAIMUND YAMBAO
REVISED BY
DATE REVISED

LAST REVISION 01-28-14
DATE PLOTTED => 29-MAY-2014
TIME PLOTTED => 08:45

Dist	COUNTY	ROUTE	POST MILES TOTAL PROJECT	SHEET No.	TOTAL SHEETS
03	But,Col,Gln Sut,Yol,Yub	16,32,45 70,113,162	Var	144	195

Raimund Yambao 2-10-14
REGISTERED CIVIL ENGINEER DATE

2-10-14
PLANS APPROVAL DATE

REGISTERED PROFESSIONAL ENGINEER
RAIMUND J. YAMBAO
No. 80379
Exp. 03-31-15
CIVIL
STATE OF CALIFORNIA

THE STATE OF CALIFORNIA OR ITS OFFICERS OR AGENTS SHALL NOT BE RESPONSIBLE FOR THE ACCURACY OR COMPLETENESS OF SCANNED COPIES OF THIS PLAIN SHEET.

GLENN 162

SHEET NUMBER	LOCATION NUMBER	BEG PM	TO	END PM	DIRECTION	DESCRIPTION	MGS	REMOVE GUARDRAIL	AFTS	AILTS	MGS END ANCHOR ASSEMBLY (TYPE SFT)	END CAP (3/4 WRAP END SECTION)	CONCRETE END BLOCK (N)	MINOR CONCRETE (MINOR STRUCTURE)	TRANSITION RAILING (TYPE WB-31)	REMOVE BRIDGE APPROACH RAILING (TYPE 8)	REMOVE CABLE ANCHOR ASSEMBLY (N)
							LF	LF	EA	EA	EA	EA	EA	CY	EA	LF	EA
C-45	346	65.48	TO	65.50	WB	BRIDGE NO 11-0056 RTE 162/5 SEPARATION (DEPARTURE)	37.5	63			1	1	1	1.1	1		1
C-45	347	65.52	TO	65.55	WB	BRIDGE NO 11-0056 RTE 162/5 SEPARATION (APPROACH)	100.0	175		1			1	1.1	1		1
C-45	348	67.19	TO	67.20	WB	BRIDGE NO 11-0009 CENTRAL IRRIGATION CANAL (DEPARTURE)	12.5	75	1				1	1.2	1		1
C-45	349	67.21	TO	67.23	WB	BRIDGE NO 11-0009 CENTRAL IRRIGATION CANAL (APPROACH)		63	1				1	1.2	1		1
C-45	350	68.14	TO	68.16	WB	BRIDGE NO 11-0011 WALKER CREEK (DEPARTURE)		63	1				1	1.1	1		1
C-45	351	68.18	TO	68.20	WB	BRIDGE NO 11-0011 WALKER CREEK (APPROACH)		63	1				1	1.1	1		1
C-46	352	70.57	TO	70.59	WB	BRIDGE NO 11-0012 QUINT CANAL (DEPARTURE)		63	1				1	1.1	1		1
C-46	353	70.60	TO	70.62	WB	BRIDGE NO 11-0012 QUINT CANAL (APPROACH)		63	1				1	1.1	1		1
C-46	354	73.54	TO	73.55	WB	BRIDGE NO 11-0013 BRUSH CANAL BRIDGE (DEPARTURE)	25.0	50			1	1	1	1.1	1		1
C-46	355	73.56	TO	73.58	WB	BRIDGE NO 11-0013 BRUSH CANAL BRIDGE (APPROACH)	25.0	63	1		1	1					2
C-46	356	74.51	TO	74.53	WB	BRIDGE NO 11-0061 BONDURANT SLOUGH (DEPARTURE)	37.5	63			1	1	1	1.1	1		1
C-46	357	74.52	TO	74.56	WB	BRIDGE NO 11-0061 BONDURANT SLOUGH (APPROACH)	25.0	50			1	1	1	1.1	1		1
C-46	358	74.57	TO	74.58	WB	BRIDGE NO 11-0059 COLUSA DRAIN (DEPARTURE)	37.5	63			1	1	1	1.1	1		1
C-46	359	74.58	TO	74.59	WB	BRIDGE NO 11-0059 COLUSA DRAIN (APPROACH)		50	1				1	1.1	1		1
C-46	360	76.24	TO	76.25	WB	BRIDGE NO 11-0035 PRINCETON-CODORA CANAL (DEPARTURE)	62.5	38			1	1	1	1.1	1		1
C-47	361	76.70	TO	76.71	WB	BRIDGE NO 11-0017 SACRAMENTO RIVER (DEPARTURE)	37.5	63			1	1	1	1.2	1		1
C-48	362	79.06	TO	79.07	WB	BRIDGE NO 11-0018 SACRAMENTO RIVER OVERFLOW (DEPARTURE)		63	1				1	1.1	1		1
C-48	363	79.09	TO	79.10	WB	BRIDGE NO 11-0018 SACRAMENTO RIVER OVERFLOW (APPROACH)		63	1				1	1.1	1		1
C-48	364	79.54	TO	79.55	WB	BRIDGE NO 11-0019 SACRAMENTO RIVER OVERFLOW (DEPARTURE)			1				1	1.4	1	50	
C-48	365	79.57	TO	79.58	WB	BRIDGE NO 11-0019 SACRAMENTO RIVER OVERFLOW (APPROACH)			1				1	1.4	1	40	
C-48	366	79.95	TO	79.96	WB	BRIDGE NO 11-0020 SACRAMENTO RIVER OVERFLOW (DEPARTURE)	25.0	50			1	1	1	1	1		1
						SUBTOTAL	425.0	1244	12	1	9	9	20	22.8	20	90.0	20

(N) - NOT A SEPARATE PAY ITEM, FOR INFORMATION ONLY

SUMMARY OF QUANTITIES

NO SCALE

Q-16

STATE OF CALIFORNIA - DEPARTMENT OF TRANSPORTATION
DESIGN
Caltrans®

FUNCTIONAL SUPERVISOR: DEANN SPANGLER
CALCULATED-DESIGNED BY: GARY DEKENS
CHECKED BY: RAIMUND YAMBAO
REVISED BY
DATE REVISED

LAST REVISION 01-28-14
DATE PLOTTED => 29-MAY-2014
TIME PLOTTED => 08:45

Dist	COUNTY	ROUTE	POST MILES TOTAL PROJECT	SHEET No.	TOTAL SHEETS
03	But,Col,Gln Sut,Yol,Yub	16,32,45 70,113,162	Var	145	195

Raimund Yambao 2-10-14
REGISTERED CIVIL ENGINEER DATE

2-10-14
PLANS APPROVAL DATE

REGISTERED PROFESSIONAL ENGINEER
RAIMUND J. YAMBAO
No. 80379
Exp. 03-31-15
CIVIL
STATE OF CALIFORNIA

THE STATE OF CALIFORNIA OR ITS OFFICERS OR AGENTS SHALL NOT BE RESPONSIBLE FOR THE ACCURACY OR COMPLETENESS OF SCANNED COPIES OF THIS PLAIN SHEET.

GLENN 162

SHEET NUMBER	LOCATION NUMBER	BEG PM	TO	END PM	DIRECTION	DESCRIPTION	MGS	REMOVE GUARDRAIL	AFTS	MGS END ANCHOR ASSEMBLY (TYPE SFT)	END CAP (3/4 WRAP END SECTION)	CONCRETE END BLOCK (N)	MINOR CONCRETE (MINOR STRUCTURE)	TRANSITION RAILING (TYPE WB-31)	REMOVE CABLE ANCHOR ASSEMBLY (N)
							LF	LF	EA	EA	EA	EA	CY	EA	EA
C-48	367	79.97	TO	79.99	WB	BRIDGE NO 11-0020 SACRAMENTO RIVER OVERFLOW (APPROACH)		63	1			1	1	1	1
C-48	368	80.01	TO	80.03	WB	BRIDGE NO 11-0021 SACRAMENTO RIVER OVERFLOW (DEPARTURE)	37.5	63		1	1	1	1	1	1
C-48	369	80.04	TO	80.06	WB	BRIDGE NO 11-0021 SACRAMENTO RIVER OVERFLOW (APPROACH)		63	1			1	1	1	1
C-49	370	80.71	TO	80.73	WB	BRIDGE NO 11-0022 ANGELS SLOUGH (DEPARTURE)		63	1			1	1.1	1	1
C-49	371	80.75	TO	80.77	WB	BRIDGE NO 11-0022 ANGELS SLOUGH (APPROACH)		63	1			1	1	1	1
C-49	372	81.61	TO	81.63	WB	BRIDGE NO 11-0023 SACRAMENTO RIVER OVERFLOW (DEPARTURE)		63	1			1	1.3	1	1
C-49	373	81.71	TO	81.73	WB	BRIDGE NO 11-0023 SACRAMENTO RIVER OVERFLOW (APPROACH)		63	1			1	1.3	1	1
C-49	374	81.84	TO	81.86	WB	BRIDGE NO 11-0031 SACRAMENTO RIVER OVERFLOW (DEPARTURE)		63	1			1	1	1	1
C-49	375	81.88	TO	81.90	WB	BRIDGE NO 11-0031 SACRAMENTO RIVER OVERFLOW (APPROACH)		63	1			1	1	1	1
C-49	376	81.99	TO	82.01	WB	BRIDGE NO 11-0024 CAMPBELL SLOUGH (DEPARTURE)	37.5	63		1	1	1	1.3	1	1
C-49	377	82.05	TO	82.07	WB	BRIDGE NO 11-0024 CAMPBELL SLOUGH (APPROACH)		63	1			1	1.3	1	1
C-50	378	83.65	TO	83.67	WB	BRIDGE NO 11-0032 BIG BUTTE CREEK OVERFLOW (DEPARTURE)		63	1			1	1.1	1	1
C-50	379	83.69	TO	83.71	WB	BRIDGE NO 11-0032 BIG BUTTE CREEK OVERFLOW (APPROACH)		63	1			1	1.1	1	1
C-50	380	83.78	TO	83.80	WB	BRIDGE NO 11-0033 BIG BUTTE CREEK OVERFLOW (DEPARTURE)	37.5	63		1	1	1	1.1	1	1
C-50	381	83.84	TO	83.88	WB	BRIDGE NO 11-0033 BIG BUTTE CREEK OVERFLOW (APPROACH) & BRIDGE NO 11-0034 BIG BUTTE CREEK OVERFLOW (DEPARTURE)	150.0	200				2	1.1	2	
C-50	382	83.90	TO	83.92	WB	BRIDGE NO 11-0034 BIG BUTTE CREEK OVERFLOW (APPROACH)		63	1			1	1.1	1	1
C-50	383	84.58	TO	84.59	WB	BRIDGE NO 11-0027 BIG BUTTE CREEK (APPROACH)		63	1			1	1.1	1	1
						SUBTOTAL	262.5	1208	13	3	3	18	18.9	18	16

(N) - NOT A SEPARATE PAY ITEM, FOR INFORMATION ONLY

SUMMARY OF QUANTITIES

NO SCALE

Q-17

STATE OF CALIFORNIA - DEPARTMENT OF TRANSPORTATION
DESIGN

FUNCTIONAL SUPERVISOR: DEANN SPANGLER

CALCULATED-DESIGNED BY: GARY DEKENS
CHECKED BY: RAIMUND YAMBAO
REVISED BY
DATE REVISED

LAST REVISION 01-28-14
DATE PLOTTED => 29-MAY-2014
TIME PLOTTED => 08:45

BORDER LAST REVISED 7/2/2010
USERNAME => s130875
DGN FILE => 0300020450pa017.dgn
RELATIVE BORDER SCALE IS IN INCHES 0 1 2 3
UNIT 0327
PROJECT NUMBER & PHASE 03000204501

Dist	COUNTY	ROUTE	POST MILES TOTAL PROJECT	SHEET No.	TOTAL SHEETS
03	But,Col,Gln Sut,Yol,Yub	16,32,45 70,113,162	Var	146	195

Raimund Yambao 2-10-14
REGISTERED CIVIL ENGINEER DATE

2-10-14
PLANS APPROVAL DATE

REGISTERED PROFESSIONAL ENGINEER
RAIMUND J. YAMBAO
No. 80379
Exp. 03-31-15
CIVIL
STATE OF CALIFORNIA

THE STATE OF CALIFORNIA OR ITS OFFICERS OR AGENTS SHALL NOT BE RESPONSIBLE FOR THE ACCURACY OR COMPLETENESS OF SCANNED COPIES OF THIS PLAIN SHEET.

YOLO 16

SHEET NUMBER	LOCATION NUMBER	BEG PM	TO	END PM	DIRECTION	DESCRIPTION	MGS	MGS (STEEL POST)	REMOVE GUARDRAIL	AFTS	AILTS	MGS END ANCHOR ASSEMBLY (TYPE SFT)	END CAP (3/4 WRAP END SECTION)	SINGLE THRIE BEAM BARRIER (STEEL POST)	CONCRETE END BLOCK (N)	MINOR CONCRETE (MINOR STRUCTURE)	TRANSITION RAILING (TYPE WB-31)	MGS (8' STEEL POST)	REMOVE CABLE ANCHOR ASSEMBLY (N)	MGS BURIED POST ANCHOR (N)	REDUCER ELEMENT (TYPE C)	REMOVE BURIED POST ANCHOR (N)
							LF	LF	LF	EA	EA	EA	EA	LF	EA		EA	LF	EA	EA	EA	EA
C-51	386	0.04	TO	0.23	EB	WEST OF BRIDGE NO 22-0019 CACHE CREEK		950.0	1000		1								1	1		1
C-51	387	1.00	TO	1.06	EB	WEST OF BRIDGE NO 22-0019 CACHE CREEK		187.5	225	1									1	1		1
C-51	388	1.54	TO	1.68	EB	WEST OF BRIDGE NO 22-0019 CACHE CREEK		712.5	750	1									1	1		1
C-51	389	1.80	TO	1.93	EB	WEST OF BRIDGE NO 22-0019 CACHE CREEK		575.0	650	2									2			
C-52	390	2.02	TO	2.12	EB	WEST OF BRIDGE NO 22-0019 CACHE CREEK			550	1	1							462.5	2			
C-52	391	2.45	TO	2.56	EB	WEST OF BRIDGE NO 22-0019 CACHE CREEK			650	1	1							562.5	2			
C-53	392	2.77	TO	3.16	EB	WEST OF BRIDGE NO 22-0019 CACHE CREEK		1837.5	2075	2				137.5					2		4	
C-52	393	3.20	TO	3.28	EB	WEST OF BRIDGE NO 22-0019 CACHE CREEK		325.0	400	2									2			
C-54	394	3.87	TO	3.89	EB	BRIDGE NO 22-0019 CACHE CREEK (APPROACH)			75		1				1	1.3	1		1			
C-54	395	3.94	TO	3.96	EB	BRIDGE NO 22-0019 CACHE CREEK (DEPARTURE)		62.5	125	1					1	1.3	1		1			
C-54	396	5.44	TO	5.49	EB	WEST OF BRIDGE NO 22-0109 RUMSEY CANYON	175.0		250	2									2			
C-55	397	6.34	TO	6.36	EB	BRIDGE NO 22-0109 RUMSEY CANYON (APPROACH)			63		1				1	1.1	1		1			
C-55	398	6.37	TO	6.38	EB	BRIDGE NO 22-0109 RUMSEY CANYON (DEPARTURE)	37.5		63			1	1		1	1.1	1					
C-55	399	7.96	TO	7.98	EB	EAST OF ROAD 41	12.5			2												
C-55	400	9.94	TO	9.97	EB	BRIDGE NO 22-0074 POPPY CREEK	37.5		163	1		1	1		2	3.2	2		2			
C-56	401	11.45	TO	11.47	EB	BRIDGE NO 22-0023 HEATHER CREEK (APPROACH)			63	1					1	1.1	1		1			
C-56	402	11.48	TO	11.49	EB	BRIDGE NO 22-0023 HEATHER CREEK (DEPARTURE)	12.5		40			1	1		1	1.1	1					
C-56	403	13.59	TO	13.62	EB	BRIDGE NO 22-0056 DIGGER PINE CREEK	37.5		155	1		1	1		2	3.2			2			
C-56	404	14.99	TO	15.01	EB	BRIDGE NO 22-0087 BALL CREEK (APPROACH)			63	1					1	1.1	1		1			
C-56	405	15.02	TO	15.04	EB	BRIDGE NO 22-0087 BALL CREEK (DEPARTURE)	37.5		63			1	1		1	1.1	1		1			
C-56	406	16.25	TO	16.27	EB	BRIDGE NO 22-0088 WINTER CREEK	87.5		125	1		1	1						2			
C-57	407	17.99	TO	18.00	EB	BRIDGE NO 22-0090 MOSSY CREEK (APPROACH)	12.5		38			1	1		1	1.1	1		1			
C-57	408	18.01	TO	18.03	EB	BRIDGE NO 22-0090 MOSSY CREEK (DEPARTURE)	37.5		63			1	1		1	1.1	1		1			
C-57	409	20.11	TO	20.12	EB	BRIDGE NO 22-0024 TAYLOR CREEK (APPROACH)			63	1					1	1.1	1		1			
C-57	410	20.14	TO	20.15	EB	BRIDGE NO 22-0024 TAYLOR CREEK (DEPARTURE)	37.5		63			1	1		1	1.1	1		1			
C-54	411	3.87	TO	3.89	WB	BRIDGE NO 22-0019 CACHE CREEK (DEPARTURE)			75		1				1	1.3	1		1			
C-54	412	3.94	TO	3.96	WB	BRIDGE NO 22-0019 CACHE CREEK (APPROACH)		12.5	88		1				1	1.3	1		1			
						SUBTOTAL	525.0	4662.5	7939	21	7	9	9	137.5	18	22.6	16	1025.0	33	3	4	3

(N) - NOT A SEPARATE PAY ITEM, FOR INFORMATION ONLY

SUMMARY OF QUANTITIES

NO SCALE

Q-18

CALCULATED-DESIGNED BY: GARY DEKENS
CHECKED BY: RAIMUND YAMBAO
REVISED BY
DATE REVISED
FUNCTIONAL SUPERVISOR: DEANN SPANGLER
STATE OF CALIFORNIA - DEPARTMENT OF TRANSPORTATION
Caltrans® DESIGN

LAST REVISION 01-28-14
DATE PLOTTED => 29-MAY-2014
TIME PLOTTED => 08:45

BORDER LAST REVISED 7/2/2010
USERNAME => s130875
DGN FILE => 0300020450pa018.dgn
RELATIVE BORDER SCALE IS IN INCHES 0 1 2 3
UNIT 0327
PROJECT NUMBER & PHASE 03000204501

Dist	COUNTY	ROUTE	POST MILES TOTAL PROJECT	SHEET No.	TOTAL SHEETS
03	But,Col,Gln Sut,Yol,Yub	16,32,45 70,113,162	Var	147	195

Raimund Yambao 2-10-14
REGISTERED CIVIL ENGINEER DATE

2-10-14
PLANS APPROVAL DATE

REGISTERED PROFESSIONAL ENGINEER
RAIMUND J. YAMBAO
No. 80379
Exp. 03-31-15
CIVIL
STATE OF CALIFORNIA

THE STATE OF CALIFORNIA OR ITS OFFICERS OR AGENTS SHALL NOT BE RESPONSIBLE FOR THE ACCURACY OR COMPLETENESS OF SCANNED COPIES OF THIS PLAN SHEET.

YOLO 16

SHEET	LOCATION NUMBER	BEG PM	TO	END PM	DIRECTION	DESCRIPTION	REMOVE MGS	MGS (STEEL POST)	REMOVE GUARDRAIL	AFTS	AILTS	MGS END ANCHOR ASSEMBLY (TYPE SFT)	END CAP (3/4 WRAP END SECTION)	CONCRETE END BLOCK (N)	MINOR CONCRETE (MINOR STRUCTURE)	TRANSITION RAILING (TYPE WB-31)	REMOVE CABLE ANCHOR ASSEMBLY (N)
							LF	LF	LF	EA	EA	EA	EA	EA		EA	EA
C-54	413	4.04	TO	4.20	WB	WEST OF BRIDGE NO 22-0109 RUMSEY CANYON		812.5	850	1		1	1				2
C-55	414	4.56	TO	4.87	WB	WEST OF BRIDGE NO 22-0109 RUMSEY CANYON		1650.0	1700		1	1	1				2
C-55	415	6.34	TO	6.36	WB	BRIDGE NO 22-0109 RUMSEY CANYON (DEPARTURE)			63		1			1	1.1	1	1
C-55	416	6.37	TO	6.39	WB	BRIDGE NO 22-0109 RUMSEY CANYON (APPROACH)			63		1			1	1.1	1	1
C-55	417	7.96	TO	7.98	WB	EAST OF ROAD 41	100		63	1		1	1				2
C-55	418	9.94	TO	9.97	WB	BRIDGE NO. 22-0074 POPPY CREEK	37.5		175	1		1	1	2	4.0	2	2
C-56	419	11.45	TO	11.47	WB	BRIDGE NO 22-0023 HEATHER CREEK (DEPARTURE)	37.5		63			1	1	1	1.1	1	1
C-56	420	11.48	TO	11.50	WB	BRIDGE NO 22-0023 HEATHER CREEK (APPROACH)			63	1				1	1.1	1	1
C-56	421	13.59	TO	13.62	WB	BRIDGE NO. 22-0056 DIGGER PINE CREEK	37.5		163	1		1	1	2	3.3		2
C-56	422	14.99	TO	15.01	WB	BRIDGE NO 22-0087 BALL CREEK (DEPARTURE)	12.5		63			1	1	1	1.1	1	1
C-56	423	15.02	TO	15.04	WB	BRIDGE NO 22-0087 BALL CREEK (APPROACH)	75.0		100	1				1	1.1	1	1
C-56	424	16.25	TO	16.27	WB	BRIDGE NO 22-0088 WINTER CREEK (DEPARTURE)	37.5		63			1	1	1	1.1	1	1
C-56	425	16.28	TO	16.29	WB	BRIDGE NO 22-0088 WINTER CREEK (APPROACH)			63	1				1	1.1	1	1
C-56	426	16.30	TO	16.33	WB	EAST OF BRIDGE NO 22-0088 WINTER CREEK	75.0		125		1	1	1				
C-57	427	17.99	TO	18.00	WB	BRIDGE NO 22-0090 MOSSY CREEK (DEPARTURE)	37.5		63			1	1	1	1.1	1	1
C-57	428	18.01	TO	18.03	WB	BRIDGE NO 22-0090 MOSSY CREEK (APPROACH)			63	1				1	1.1	1	1
C-57	429	20.11	TO	20.12	WB	BRIDGE NO 22-0024 TAYLOR CREEK (DEPARTURE)	37.5		63			1	1	1	1.1	1	1
C-57	430	20.14	TO	20.15	WB	BRIDGE NO 22-0024 TAYLOR CREEK (APPROACH)			63	1				1	1.1	1	1
						SUBTOTAL	487.5	2462.5	3869	9	4	11	11	16	20.5	12	22

(N) - NOT A SEPARATE PAY ITEM, FOR INFORMATION ONLY

SUMMARY OF QUANTITIES

NO SCALE

Q-19

STATE OF CALIFORNIA - DEPARTMENT OF TRANSPORTATION
Caltrans® DESIGN

FUNCTIONAL SUPERVISOR: DEANN SPANGLER
CALCULATED-DESIGNED BY:
CHECKED BY: RAIMUND YAMBAO
DRAWN BY: GARY DEKENS
REVISED BY
DATE REVISED

LAST REVISION 01-28-14
DATE PLOTTED => 29-MAY-2014
TIME PLOTTED => 08:45

BORDER LAST REVISED 7/2/2010
USERNAME => s130875
DGN FILE => 0300020450pa019.dgn
RELATIVE BORDER SCALE IS IN INCHES 0 1 2 3
UNIT 0327
PROJECT NUMBER & PHASE 03000204501

Dist	COUNTY	ROUTE	POST MILES TOTAL PROJECT	SHEET No.	TOTAL SHEETS
03	But,Col,Gln Sut,Yol,Yub	16,32,45 70,113,162	Var	148	195

Raimund Yambao 2-10-14
REGISTERED CIVIL ENGINEER DATE

2-10-14
PLANS APPROVAL DATE

RAIMUND J. YAMBAO No. 80379 Exp. 03-31-15 CIVIL — REGISTERED PROFESSIONAL ENGINEER — STATE OF CALIFORNIA

THE STATE OF CALIFORNIA OR ITS OFFICERS OR AGENTS SHALL NOT BE RESPONSIBLE FOR THE ACCURACY OR COMPLETENESS OF SCANNED COPIES OF THIS PLAN SHEET.

YOLO 113

SHEET NUMBER	LOCATION NUMBER	BEG PM	TO	END PM	DIRECTION	DESCRIPTION	MGS	REMOVE GUARDRAIL	AFTS	AILTS	MGS END ANCHOR ASSEMBLY (TYPE SFT)	END CAP (3/4 WRAP END SECTION)	CONCRETE END BLOCK (N)	MINOR CONCRETE (MINOR STRUCTURE)	TRANSITION RAILING (TYPE WB-31)	REMOVE CABLE ANCHOR ASSEMBLY (N)
							LF	LF	EA	EA	EA	EA	EA		EA	EA
C-57	431	11.74	TO	11.76	NB	NORTH OF CHURCHILL DOWNS AVE	12.5	63		1	1	1				2
C-58	432	13.06	TO	13.07	NB	SOUTH OF BRIDGE NO 22-0038 CACHE CREEK	25.0	75		1	1	1				2
C-58	433	13.08	TO	13.09	NB	BRIDGE NO 22-0038 CACHE CREEK (APPROACH)	12.5	38			1	1	1	1.1	1	1
C-58	434	13.14	TO	13.16	NB	BRIDGE NO 22-0038 CACHE CREEK (DEPARTURE)		63		1			1	1.1	1	1
C-58	435	M21.24	TO	M21.26	NB	BRIDGE NO 22-0039 KNIGHTS LANDING RIDGE CUT (APPROACH)		75		1			1	1.1	1	1
C-58	436	R21.34	TO	R21.36	NB	BRIDGE NO 22-0039 KNIGHTS LANDING RIDGE CUT (DEPARTURE)		75		1			1	1.1	1	1
C-58	437	21.97	TO	21.98	NB	BRIDGE NO 22-0040 SACRAMENTO RIVER (APPROACH)		75	1			1				2
C-57	438	11.44	TO	11.48	SB	BRIDGE NO 22-0152 RTE 113/5 SEPARATION	137.5	175	1		1	1				2
C-57	439	11.70	TO	11.72	SB	NORTH OF CHURCHILL DOWNS AVE		90		2						2
C-57	440	11.78	TO	11.80	SB	NORTH OF CHURCHILL DOWNS AVE	50.0	63		1	1	1				2
C-58	441	13.07	TO	13.09	SB	BRIDGE NO 22-0038 CACHE CREEK (DEPARTURE)		63		1			1	1.1	1	1
C-58	442	13.14	TO	13.16	SB	BRIDGE NO 22-0038 CACHE CREEK (APPROACH)		63		1			1	1.1	1	1
C-58	443	M21.24	TO	M21.26	SB	BRIDGE NO 22-0039 KNIGHTS LANDING RIDGE CUT (DEPARTURE)		75		1			1	1.1	1	1
						SUBTOTAL	237.5	993	2	11	5	6	7	7.7	7	19

(N) - NOT A SEPARATE PAY ITEM, FOR INFORMATION ONLY

SUMMARY OF QUANTITIES

NO SCALE

Q-20

STATE OF CALIFORNIA - DEPARTMENT OF TRANSPORTATION
Caltrans® DESIGN

FUNCTIONAL SUPERVISOR: DEANN SPANGLER

CALCULATED-DESIGNED BY: GARY DEKENS
CHECKED BY: RAIMUND YAMBAO

REVISED BY	DATE REVISED

LAST REVISION 01-28-14
DATE PLOTTED => 29-MAY-2014
TIME PLOTTED => 08:45

BORDER LAST REVISED 7/2/2010

USERNAME => s130875
DGN FILE => 0300020450pa020.dgn

RELATIVE BORDER SCALE IS IN INCHES 0 1 2 3

UNIT 0327

PROJECT NUMBER & PHASE 03000204501

Dist	COUNTY	ROUTE	POST MILES TOTAL PROJECT	SHEET No.	TOTAL SHEETS
03	But,Col,Gln Sut,Yol,Yub	16,32,45 70,113,162	Var	149	195

Raimund Yambao 2-10-14
REGISTERED CIVIL ENGINEER DATE

2-10-14
PLANS APPROVAL DATE

REGISTERED PROFESSIONAL ENGINEER
RAIMUND J. YAMBAO
No. 80379
Exp. 03-31-15
CIVIL
STATE OF CALIFORNIA

THE STATE OF CALIFORNIA OR ITS OFFICERS OR AGENTS SHALL NOT BE RESPONSIBLE FOR THE ACCURACY OR COMPLETENESS OF SCANNED COPIES OF THIS PLAIN SHEET.

SUTTER 113

SHEET NUMBER	LOCATION NUMBER	BEG PM	TO	END PM	DIRECTION	DESCRIPTION	MGS	REMOVE GUARDRAIL	AILTS	MGS END ANCHOR ASSEMBLY (TYPE SFT)	END CAP (3/4 WRAP END SECTION)	CONCRETE END BLOCK (N)	MINOR CONCRETE (MINOR STRUCTURE)	TRANSITION RAILING (TYPE WB-31)
							LF	LF	EA	EA	EA	EA	CY	EA
C-58	384	4.94	TO	4.97	NB	BRIDGE NO 18-0012 ROBBINS CANAL (APPROACH)	37.5	115	1			1	1.1	1
C-58	385	5.00	TO	5.02	NB	BRIDGE NO 18-0012 ROBBINS CANAL (DEPARTURE)	50.0	75		1	1	1	1.1	1
						SUBTOTAL	87.5	190	1	1	1	2	2.2	2

(N) - NOT A SEPARATE PAY ITEM, FOR INFORMATION ONLY

SUMMARY OF QUANTITIES

NO SCALE

Q-21

CALCULATED-DESIGNED BY	GARY DEKENS	REVISED BY	
CHECKED BY	RAIMUND YAMBAO	DATE REVISED	

FUNCTIONAL SUPERVISOR: DEANN SPANGLER

STATE OF CALIFORNIA - DEPARTMENT OF TRANSPORTATION
Caltrans® DESIGN

LAST REVISION 01-28-14 | DATE PLOTTED => 29-MAY-2014 | TIME PLOTTED => 10:45

BORDER LAST REVISED 7/2/2010 | USERNAME => s130875 | DGN FILE => 0300020450pa021.dgn | RELATIVE BORDER SCALE IS IN INCHES 0 1 2 3 | UNIT 0327 | PROJECT NUMBER & PHASE 03000204501

Dist	COUNTY	ROUTE	POST MILES TOTAL PROJECT	SHEET No.	TOTAL SHEETS
03	But,Col,Gln Sut,Yol,Yub	16,32,45 70,113,162	Var	150	195

Raimund Yambao 2-10-14
REGISTERED CIVIL ENGINEER DATE

2-10-14
PLANS APPROVAL DATE

REGISTERED PROFESSIONAL ENGINEER
RAIMUND J. YAMBAO
No. 80379
Exp. 03-31-15
CIVIL
STATE OF CALIFORNIA

THE STATE OF CALIFORNIA OR ITS OFFICERS OR AGENTS SHALL NOT BE RESPONSIBLE FOR THE ACCURACY OR COMPLETENESS OF SCANNED COPIES OF THIS PLAN SHEET.

HOT MIX ASPHALT DIKE

LOCATION NUMBER	COUNTY/ROUTE	BEG PM	TO	END PM	DIRECTION	DESCRIPTION	REMOVE AC DIKE	PLACE HOT MIX ASPHALT DIKE (TYPE F)
							LF	LF
243	GLE 32	L0.00	TO	L0.01	EB	BRIDGE NO 11-0077 ROUTE 32/5 SEPARATION (APPROACH)	75	75
244	GLE 32	L0.03	TO	L0.05	EB	BRIDGE NO 11-0077 ROUTE 32/5 SEPARATION (DEPARTURE)	75	75
346	GLE 162	65.48	TO	65.50	WB	BRIDGE NO 11-0056 RTE 162/5 SEPARATION (DEPARTURE)		75
361	GLE 162	76.70	TO	76.71	WB	BRIDGE NO 11-0017 SACRAMENTO RIVER (DEPARTURE)		30
						SUBTOTAL	150	255

HOT MIX ASPHALT

LOCATION NUMBER	COUNTY/ROUTE	BEG PM	TO	END PM	DIRECTION	DESCRIPTION	MINOR HOT MIX ASPHALT	PLACE HOT MIX ASPHALT (MISCELLANEOUS AREA)
							TONS	SQYD
282 & 336	GLE 162	49.93	TO	49.95	EB/WB	WEST OF RD 303	8.0	45
304	GLE 162	76.70	TO	76.71	EB	BRIDGE NO 11-0017 SACRAMENTO RIVER (APPROACH), HMA RAMP	0.7	
361	GLE 162	76.70	TO	76.71	WB	BRIDGE NO 11-0017 SACRAMENTO RIVER (DEPARTURE), HMA RAMP	0.7	
394	YOL 16	3.87	TO	3.89	EB	BRIDGE NO 22-0019 CACHE CREEK (APPROACH), HMA RAMP	0.6	
395	YOL 16	3.94	TO	3.96	EB	BRIDGE NO 22-0019 CACHE CREEK (DEPARTURE), HMA RAMP	0.6	
411	YOL 16	3.87	TO	3.89	WB	BRIDGE NO 22-0019 CACHE CREEK (DEPARTURE), HMA RAMP	0.6	
412	YOL 16	3.67	TO	3.96	WB	BRIDGE NO 22-0019 CACHE CREEK (APPROACH), HMA RAMP	0.6	
HOT MIX ASPHALT DIKE (TYPE F)							0.7	
						SUBTOTAL	12.6	45

SUMMARY OF QUANTITIES

NO SCALE

Q-22

CALCULATED-DESIGNED BY: GARY DEKENS
CHECKED BY: RAIMUND YAMBAO
FUNCTIONAL SUPERVISOR: DEANN SPANGLER
REVISED BY
DATE REVISED

STATE OF CALIFORNIA - DEPARTMENT OF TRANSPORTATION
Caltrans® DESIGN

LAST REVISION 01-28-14
DATE PLOTTED => 29-MAY-2014
TIME PLOTTED => 08:45

Dist	COUNTY	ROUTE	POST MILES TOTAL PROJECT	SHEET No.	TOTAL SHEETS
03	But,Col,Gln Sut,Yol,Yub	16,32,45 70,113,162	Var	151	195

Raimund Yambao 2-10-14
REGISTERED CIVIL ENGINEER DATE

2-10-14
PLANS APPROVAL DATE

RAIMUND J. YAMBAO No. 80379 Exp. 03-31-15 CIVIL — REGISTERED PROFESSIONAL ENGINEER — STATE OF CALIFORNIA

THE STATE OF CALIFORNIA OR ITS OFFICERS OR AGENTS SHALL NOT BE RESPONSIBLE FOR THE ACCURACY OR COMPLETENESS OF SCANNED COPIES OF THIS PLAN SHEET.

OBJECT MARKERS

LOCATION NUMBER	COUNTY/ROUTE	BEG PM	TO	END PM	DIRECTION	DESCRIPTION	TYPE L-1
							EA
247	GLE 32	5.22	TO	5.24	EB	BRIDGE NO 11-0029 STONY CREEK BRIDGE (APPROACH)	1
254	GLE 32	5.53	TO	5.55	WB	BRIDGE NO 11-0029 STONY CREEK BRIDGE (APPROACH)	1
256	GLE 45	0.63	TO	0.78	NB	SOUTH OF RD 66	1
259	GLE 45	9.77	TO	9.83	NB	SOUTH OF SIDDS RD	1
262	GLE 45	20.63	TO	20.65	NB	BRIDGE NO 11-0038 STONY CREEK (APPROACH)	1
273	GLE 45	20.75	TO	20.77	SB	BRIDGE NO 11-0038 STONY CREEK (APPROACH)	1
275	GLE 162	42.93	TO	42.95	EB	SOUTH OF RD 305	1
276	GLE 162	44.30	TO	44.32	EB	SOUTH OF RD 305	1
277	GLE 162	45.10	TO	45.10	EB	BRIDGE NO 11-0087 STONY CREEK BRIDGE (APPROACH)	1
279	GLE 162	48.76	TO	48.79	EB	WEST OF RD 303	1
280	GLE 162	48.95	TO	48.98	EB	WEST OF RD 303	1
281	GLE 162	49.26	TO	49.30	EB	WEST OF RD 303	1
285	GLE 162	53.68	TO	53.70	EB	WEST OF BRIDGE NO 11-0096 TEHAMA-COLUSA CANAL	1
290	GLE 162	62.36	TO	62.37	EB	BRIDGE NO 11-0090 SOUTH FORK WILLOW CREEK (APPROACH)	1
292	GLE 162	67.19	TO	67.20	EB	BRIDGE NO 11-0009 CENTRAL IRRIGATION CANAL (APPROACH)	1
294	GLE 162	68.14	TO	68.16	EB	BRIDGE NO 11-0011 WALKER CREEK (APPROACH)	1
296	GLE 162	70.58	TO	70.60	EB	BRIDGE NO 11-0012 QUINT CANAL (APPROACH)	1
300	GLE 162	74.51	TO	74.53	EB	BRIDGE NO 11 0061 BONDURANT SLOUGH (APPROACH)	1
303	GLE 162	76.24	TO	76.25	EB	BRIDGE NO 11-0035 PRINCETON-CODORA CANAL (APPROACH)	1
305	GLE 162	77.55	TO	77.67	EB	SOUTH OF EUREKA ST	1
306	GLE 162	79.06	TO	79.07	EB	BRIDGE NO 11-0018 SACRAMENTO RIVER OVERFLOW (APPROACH)	1
308	GLE 162	79.54	TO	79.55	EB	BRIDGE NO 11-0019 SACRAMENTO RIVER OVERFLOW (APPROACH)	1
312	GLE 162	80.01	TO	80.03	EB	BRIDGE NO 11-0021 SACRAMENTO RIVER OVERFLOW (APPROACH)	1
314	GLE 162	80.71	TO	80.73	EB	BRIDGE NO 11-0022 ANGELS SLOUGH (APPROACH)	1
316	GLE 162	81.61	TO	81.63	EB	BRIDGE NO 11-0023 SACRAMENTO RIVER OVERFLOW (APPROACH)	1
318	GLE 162	81.84	TO	81.86	EB	BRIDGE NO 11-0031 SACRAMENTO RIVER OVERFLOW (APPROACH)	1
320	GLE 162	81.99	TO	82.01	EB	BRIDGE NO 11-0024 CAMPBELL SLOUGH (APPROACH)	1
322	GLE 162	83.65	TO	83.67	EB	BRIDGE NO 11-0032 BIG BUTTE CREEK OVERFLOW (APPROACH)	1
324	GLE 162	83.78	TO	83.80	EB	BRIDGE NO 11-0033 BIG BUTTE CREEK OVERFLOW (APPROACH)	1
329	GLE 162	42.16	TO	42.22	WB	SOUTH OF RD 305	1
330	GLE 162	42.93	TO	42.95	WB	SOUTH OF RD 305	1
331	GLE 162	44.30	TO	44.32	WB	SOUTH OF RD 305	1
334	GLE 162	48.95	TO	48.98	WB	WEST OF RD 303	1
335	GLE 162	49.26	TO	49.30	WB	WEST OF RD 303	1
339	GLE 162	53.68	TO	53.70	WB	WEST OF BRIDGE NO 11-0096 TEHAMA-COLUSA CANAL	1
345	GLE 162	62.39	TO	62.41	WB	BRIDGE NO 11-0090 SOUTH FORK WILLOW CREEK (APPROACH)	1
349	GLE 162	67.21	TO	67.23	WB	BRIDGE NO 11-0009 CENTRAL IRRIGATION CANAL (APPROACH)	1
351	GLE 162	68.18	TO	68.20	WB	BRIDGE NO 11-0011 WALKER CREEK (APPROACH)	1
353	GLE 162	70.60	TO	70.62	WB	BRIDGE NO 11-0012 QUINT CANAL (APPROACH)	1
355	GLE 162	73.56	TO	73.58	WB	BRIDGE NO 11-0013 BRUSH CANAL BRIDGE (APPROACH)	1
363	GLE 162	79.09	TO	79.10	WB	BRIDGE NO 11-0018 SACRAMENTO RIVER OVERFLOW (APPROACH)	1
365	GLE 162	79.57	TO	79.58	WB	BRIDGE NO 11-0019 SACRAMENTO RIVER OVERFLOW (APPROACH)	1
367	GLE 162	79.97	TO	79.99	WB	BRIDGE NO 11-0020 SACRAMENTO RIVER OVERFLOW (APPROACH)	1
369	GLE 162	80.04	TO	80.06	WB	BRIDGE NO 11-0021 SACRAMENTO RIVER OVERFLOW (APPROACH)	1
371	GLE 162	80.75	TO	80.77	WB	BRIDGE NO 11-0022 ANGELS SLOUGH (APPROACH)	1
373	GLE 162	81.71	TO	81.73	WB	BRIDGE NO 11-0023 SACRAMENTO RIVER OVERFLOW (APPROACH)	1
375	GLE 162	81.88	TO	81.90	WB	BRIDGE NO 11-0031 SACRAMENTO RIVER OVERFLOW (APPROACH)	1
377	GLE 162	82.05	TO	82.07	WB	BRIDGE NO 11-0024 CAMPBELL SLOUGH (APPROACH)	1
379	GLE 162	83.69	TO	83.71	WB	BRIDGE NO 11-0032 BIG BUTTE CREEK OVERFLOW (APPROACH)	1
382	GLE 162	83.90	TO	83.92	WB	BRIDGE NO 11-0034 BIG BUTTE CREEK OVERFLOW (APPROACH)	1
383	GLE 162	84.58	TO	84.59	WB	BRIDGE NO 11-0027 BIG BUTTE CREEK (APPROACH)	1

OBJECT MARKERS

LOCATION NUMBER	COUNTY/ROUTE	BEG PM	TO	END PM	DIRECTION	DESCRIPTION	TYPE L-1
							EA
386	YOL 16	0.04	TO	0.23	EB	WEST OF BRIDGE NO 22-0019 CACHE CREEK	2
387	YOL 16	1.00	TO	1.06	EB	WEST OF BRIDGE NO 22-0019 CACHE CREEK	1
388	YOL 16	1.54	TO	1.68	EB	WEST OF BRIDGE NO 22-0019 CACHE CREEK	2
389	YOL 16	1.80	TO	1.93	EB	WEST OF BRIDGE NO 22-0019 CACHE CREEK	1
390	YOL 16	2.02	TO	2.12	EB	WEST OF BRIDGE NO 22-0019 CACHE CREEK	1
391	YOL 16	2.45	TO	2.56	EB	WEST OF BRIDGE NO 22-0019 CACHE CREEK	1
392	YOL 16	2.77	TO	3.16	EB	WEST OF BRIDGE NO 22-0019 CACHE CREEK	1
393	YOL 16	3.20	TO	3.28	EB	WEST OF BRIDGE NO 22-0019 CACHE CREEK	1
396	YOL 16	5.44	TO	5.49	EB	WEST OF BRIDGE NO 22-0109 RUMSEY CANYON	1
399	YOL 16	7.96	TO	7.98	EB	EAST OF ROAD 41	1
438	YOL 113	11.44	TO	11.48	SB	BRIDGE NO 22-0152 RTE 113/5 SEPARATION	1
						SUBTOTAL	64

SEE Q-24 FOR TOTAL QUANTITY OF OBJECT MARKERS (TYPE L-1)

SUMMARY OF QUANTITIES

NO SCALE

Q-23

LAST REVISION 01-28-14 DATE PLOTTED => 29-MAY-2014 TIME PLOTTED => 10:45

REVISED BY | DATE REVISED

CALCULATED-DESIGNED BY: GARY DEKENS
CHECKED BY: RAIMUND YAMBAO

FUNCTIONAL SUPERVISOR: DEANN SPANGLER

STATE OF CALIFORNIA - DEPARTMENT OF TRANSPORTATION
Caltrans® DESIGN

BORDER LAST REVISED 7/2/2010

USERNAME => s130875
DGN FILE => 0300020450pa023.dgn

RELATIVE BORDER SCALE IS IN INCHES 0 1 2 3

UNIT 0327

PROJECT NUMBER & PHASE 03000204501

Dist	COUNTY	ROUTE	POST MILES TOTAL PROJECT	SHEET No.	TOTAL SHEETS
03	But,Col,Gln Sut,Yol,Yub	16,32,45 70,113,162	Var	152	195

2-10-14
REGISTERED CIVIL ENGINEER DATE

ERIC NORMAN SOUZA No. 75706 Exp. 06-30-14 CIVIL — REGISTERED PROFESSIONAL ENGINEER — STATE OF CALIFORNIA

2-10-14
PLANS APPROVAL DATE

THE STATE OF CALIFORNIA OR ITS OFFICERS OR AGENTS SHALL NOT BE RESPONSIBLE FOR THE ACCURACY OR COMPLETENESS OF SCANNED COPIES OF THIS PLAN SHEET.

HEADWALL

LOCATION NUMBER	PM	DIRECTION	DESCPRIPTION	RSP FABRIC (CLASS 8)	RSP (NO. 2, METHOD B)	IMPORTED BORROW	BAR REINFORCING STEEL (EPOXY COATED)	CONCRETE BACKFILL	MISCELLANEOUS IRON AND STEEL
				SQYD	CY	CY	LB	CY	LB
282 & 336	49.93 TO 49.95	EB/WB	WEST OF RD 303	55.0	22.00	7	731.5	9	305.6
			TOTAL	55.0	22.00	7	731.5	9	305.6

ENVIRONMENTAL

	TREATED WOOD WASTE
	LB
TOTAL	900,000

TEMPORARY QUANTITIES

LOCATIONS	Temp RAILING (TYPE K)	ALTERNATIVE Temp CRASH CUSHION
	LF	EA
400	120	2
403	120	2
418	120	2
421	120	2
TOTAL	480	8

QUANTITY SUMMARY

SHEET NO.	DESCRIPTION	MGS	MGS (STEEL POST)	MGS (7' POST)	MGS (8' STEEL POST)	REMOVE GUARDRAIL	(N) REMOVE CAA	(N) REMOVE ANCHOR POST	AFTS	AILTS	(N) MGS BURIED POST ANCHOR	MGS END ANCHOR ASSEMBLY (TYPE SFT)	ALTERNATIVE CRASH CUSHION	(N) CONCRETE END BLOCK	MINOR CONCRETE (MINOR STRUCTURE)	MINOR HMA	PLACE HMA (MISCELLANEOUS AREA)	TRANSITION RAILING (TYPE WB-31)	MGS TERMINAL ANCHOR ASSEMBLY (Type CA)	END CAP (3/4 WRAP END SECTION)	ADJUST GUARDRAIL	SINGLE THRIE BEAM (STEEL POST)	REMOVE BRIDGE APPROACH RAILING (TYPE 8)	VEGETATION CONTROL (MINOR CONCRETE)	OBJECT MARKER (TYPE L-1)	REMOVE AC DIKE	PLACE HMA DIKE (TYPE F)	REDUCER ELEMENT (TYPE C)	(N) REMOVE Exist BURIED POST ANCHOR	REMOVE CONCRETE	(N) MGS TRANSITION TO MBGR
		LF	LF	LF	LF	LF	EA	EA	EA	EA	EA	EA	EA	EA	CY	TON	SQYD	EA	EA	EA	LF	LF	LF	SQYD	EA	LF	LF	EA	EA	CY	EA
SHEET Q-1	BUTTE COUNTY ROUTE 32	1,850.0	5,162.5		912.5	9,231	40		18	2	2	19	1	19	22.85			21		19				758	19				2		
SHEET Q-2	BUTTE COUNTY ROUTE 70	300.0	10,500.0		6,512.5	18,877	44	5	19	12	21	13		8	13.73	1.4	2.2	9		7				509	30				21	0.3	
SHEET Q-3	BUTTE COUNTY ROUTE 70	325.0	7,812.5		3,687.5	13,303	28	14	15	7	21	7		19	38.29	1.4	2.2	20		2				471	22				22	0.3	
SHEET Q-4	BUTTE COUNTY ROUTE 70		10,120.0		5,187.5	17,217	46	46	28	5	4	11		20	42.98			20		2					20				4		
SHEET Q-5	BUTTE COUNTY ROUTE 162	6,375.0				7,402	31	6	15	7	4	8		8	8.84	2.8	4.4	8		6				756	12				4		
SHEET Q-6	BUTTE COUNTY ROUTE 162	13,100.0		1,562.5		16,021	36	2	15	14	10	8		9	9.18	2.8	4.4	9		8				1,653	17				10		
SHEET Q-7	COLUSA COUNTY ROUTE 16	11,900.0		975.0		13,613	19	4	8	4	9	7		8	10.96	16.8	17.6	8		7					12				9		
SHEET Q-8	COLUSA COUNTY ROUTE 45	1,137.5		400.0		2,610	50		17	4		29		1	2.35			8		29					16						
SHEET Q-9	YUBA COUNTY ROUTE 70	225.0				310	4		1	1		2								2				185	1						
SHEET Q-10	GLENN COUNTY ROUTE 32	87.5				725	10		7	2		3		12	12.6			12		6											
SHEET Q-11	GLENN COUNTY ROUTE 45	1,812.5		2,027.5		5,091	28		8	15		3		4	4.7			6	2	3	25									4	
SHEET Q-12	GLENN COUNTY ROUTE 162	645.3		212.5		1,926	27		16	5	3	4			1.1			3		4									3	1	
SHEET Q-13	GLENN COUNTY ROUTE 162	212.5		587.5		1,516	14		10	1		3		12	13.3			12		2	25										
SHEET Q-14	GLENN COUNTY ROUTE 162	137.5				982	16		14			4		18	20.4			18		4			90								
SHEET Q-15	GLENN COUNTY ROUTE 162	1,287.5		75.0		2,579	29		19	5	1	5		6	4.4			9		5									1		1
SHEET Q-16	GLENN COUNTY ROUTE 162	425.0				1,244	20		12	1		9		20	22.8			20		9			90								
SHEET Q-17	GLENN COUNTY ROUTE 162	262.5				1208	16		13			3		18	18.9			18		3											
SHEET Q-18	YOLO COUNTY ROUTE 16	525.0	4,662.5		1,025.0	7,939	33		21	7	3	9		18	22.6			16		9		137.5							4	3		
SHEET Q-19	YOLO COUNTY ROUTE 16	487.5	2,462.5			3,869	22		9	4		11		16	20.5			12		11											
SHEET Q-20	YOLO COUNTY ROUTE 113	237.5				993	19		2	11		5		7	7.7			7		6											
SHEET Q-21	SUTTER COUNTY ROUTE 113	87.5				190				1		1		2	2.2			2		1											
SHEET Q-22																12.6	45.0									150	255				
SHEET Q-23																									64						
TOTAL		41,420.3	40,720.0	5,840.0	17,325.0	126,846	532	77	267	108	78	164	1	225	300.38	37.8	75.8	238	2	145	50	137.5	180	4,332	213	150	255	4	79	0.6	6

(N) - NOT A SEPARATE PAY ITEM, FOR INFORMATION ONLY

CALCULATED-DESIGNED BY: AL G. CHIN
CHECKED BY: ERIC SOUZA
FUNCTIONAL SUPERVISOR: STEPHEN WRIGHT
REVISED BY
DATE REVISED

STATE OF CALIFORNIA - DEPARTMENT OF TRANSPORTATION
Caltrans®
TRAFFIC

LAST REVISION 10-29-13
DATE PLOTTED => 29-MAY-2014
TIME PLOTTED => 08:46

SUMMARY OF QUANTITIES
Q-24

M

Maint	MAINTENANCE
Max	MAXIMUM
MB	METAL BEAM
MBB	METAL BEAM BARRIER
MBGR	METAL BEAM GUARD RAILING
Med	MEDIAN
MGS	MIDWEST GUARDRAIL SYSTEM
MH	MANHOLE
Min	MINIMUM
Misc	MISCELLANEOUS
Misc I & S	MISCELLANEOUS IRON AND STEEL
Mkr	MARKER
Mod	MODIFIED, MODIFY
Mon	MONUMENT
MP	METAL PLATE
MPGR	METAL PLATE GUARD RAILING
MR	MOVEMENT RATING
MSE	MECHANICALLY STABILIZED EMBANKMENT
Mt	MOUNTAIN, MOUNT
Mtl	MATERIAL
MVP	MAINTENANCE VEHICLE PULLOUT

N

N	NORTH
NB	NORTHBOUND
No.	NUMBER (MUST HAVE PERIOD)
Nos.	NUMBERS (MUST HAVE PERIOD)
NPS	NOMINAL PIPE SIZE
NS	NEAR SIDE
NSP	NEW STANDARD PLAN
NTS	NOT TO SCALE

O

Oblr	OBLITERATE
OC	OVERCROSSING
OD	OUTSIDE DIAMETER
OF	OUTSIDE FACE
OG	ORIGINAL GROUND
OGAC	OPEN GRADED ASPHALT CONCRETE
OGFC	OPEN GRADED FRICTION COURSE
OH	OVERHEAD
OHWM	ORDINARY HIGH WATER MARK
O-O	OUT TO OUT
Opp	OPPOSITE
OSD	OVERSIDE DRAIN

P

P	PAGE
PAP	PERFORATED ALUMINUM PIPE
PB	PULL BOX
PC	POINT OF CURVATURE, PRECAST
PCC	POINT OF COMPOUND CURVE, PORTLAND CEMENT CONCRETE
PCMS	PORTABLE CHANGEABLE MESSAGE SIGN
PCP	PERFORATED CONCRETE PIPE, PRESTRESSED CONCRETE PIPE
PCVC	POINT OF COMPOUND VERTICAL CURVE
PEC	PERMIT TO ENTER AND CONSTRUCT
Ped	PEDESTRIAN
Ped OC	PEDESTRIAN OVERCROSSING
Ped UC	PEDESTRIAN UNDERCROSSING
Perm Mtl	PERMEABLE MATERIAL

P continued

PG	PROFILE GRADE
PI	POINT OF INTERSECTION
PJP	PARTIAL JOINT PENETRATION
Pkwy	PARKWAY
ℙ,PL	PLATE
P/L	PROPERTY LINE
PM	POST MILE, TIME FROM NOON TO MIDNIGHT
PN	PAVING NOTCH
POC	POINT OF HORIZONTAL CURVE
POT	POINT OF TANGENT
POVC	POINT OF VERTICAL CURVE
PP	PIPE PILE, PLASTIC PIPE, POWER POLE
PPL	PREFORMED PERMEABLE LINER
PPP	PERFORATED PLASTIC PIPE
PRC	POINT OF REVERSE CURVE
PRF	PAVEMENT REINFORCING FABRIC
PRVC	POINT OF REVERSE VERTICAL CURVE
PS&E	PLANS, SPECIFICATIONS AND ESTIMATES
PS, P/S	PRESTRESSED
PSP	PERFORATED STEEL PIPE
PT	POINT OF TANGENCY
PVC	POLYVINYL CHLORIDE
Pvmt	PAVEMENT

Q

Qty	QUANTITY

R

R	RADIUS
R & D	REMOVE AND DISPOSE
R & S	REMOVE AND SALVAGE
R/C	RATE OF CHANGE
RCA	REINFORCED CONCRETE ARCH
RCB	REINFORCED CONCRETE BOX
RCP	REINFORCED CONCRETE PIPE
RCPA	REINFORCED CONCRETE PIPE ARCH
Rd	ROAD
Reinf	REINFORCED, REINFORCEMENT, REINFORCING
Rel	RELOCATE
Repl	REPLACEMENT
Ret	RETAINING
Rev	REVISED, REVISION
Rdwy	ROADWAY
RHMA	RUBBERIZED HOT MIX ASPHALT
Riv	RIVER
RM	ROAD-MIXED
RP	RADIUS POINT, REFERENCE POINT
RR	RAILROAD
RSP	ROCK SLOPE PROTECTION, REVISED STANDARD PLAN
Rt	RIGHT
Rte	ROUTE
RW	REDWOOD, RETAINING WALL
R/W	RIGHT OF WAY
Rwy	RAILWAY

S

S	SOUTH, SUPPLEMENT
SAE	STRUCTURE APPROACH EMBANKMENT
Salv	SALVAGE
SAPP	STRUCTURAL ALUMINUM PLATE PIPE
SB	SOUTHBOUND
SC	SAND CUSHION
SCSP	SLOTTED CORRUGATED STEEL PIPE
SD	STORM DRAIN
Sec	SECOND, SECTION
Sep	SEPARATION
SG	SUBGRADE
Shld	SHOULDER
Sht	SHEET
Sim	SIMILAR
℄	STATION LINE
SM	SELECTED MATERIAL
Spec	SPECIAL, SPECIFICATIONS
SPP	SLOTTED PLASTIC PIPE
SS	SLOPE STAKE
SSBM	STRAP AND SADDLE BRACKET METHOD
SSD	STRUCTURAL SECTION DRAIN
SSPA	STRUCTURAL STEEL PLATE ARCH
SSPP	STRUCTURAL STEEL PLATE PIPE
SSPPA	STRUCTURAL STEEL PLATE PIPE ARCH
SSRP	STEEL SPIRAL RIB PIPE
St	STREET
Sta	STATION
STBB	SINGLE THRIE BEAM BARRIER
Std	STANDARD
Str	STRUCTURE
Surf	SURFACING
SW	SIDEWALK, SOUND WALL
Swr	SEWER
Sym	SYMMETRICAL
S4S	SURFACE 4 SIDES

T

T	SEMI-TANGENT
Tan	TANGENT
TBB	THRIE BEAM BARRIER
Tbr	TIMBER
TC	TOP OF CURB
TCB	TRAFFIC CONTROL BOX
TCE	TEMPORARY CONSTRUCTION EASEMENT
Tel	TELEPHONE
Temp	TEMPORARY
TG	TOP OF GRADE
Tot	TOTAL
TP	TELEPHONE POLE
TPB	TREATED PERMEABLE BASE
TPM	TREATED PERMEABLE MATERIAL
Trans	TRANSITION

T continued

TS	TRANSVERSE, TRAFFIC SIGNAL, TUBULAR STEEL
Typ	TYPICAL

U

UC	UNDERCROSSING
UD	UNDERDRAIN
UG	UNDERGROUND
UON	UNLESS OTHERWISE NOTED
UP	UNDERPASS

V

V	VALVE, DESIGN SPEED
Var	VARIABLE, VARIES
VC	VERTICAL CURVE
VCP	VITRIFIED CLAY PIPE
Vert	VERTICAL
Via	VIADUCT
Vol	VOLUME

W

W	WEST, WIDTH
WB	WESTBOUND
WH	WEEP HOLE
WM	WIRE MESH
WS	WATER SURFACE
WSP	WELDED STEEL PIPE
Wt	WEIGHT
WV	WATER VALVE
WW	WINGWALL
WWLOL	WINGWALL LAYOUT LINE

X

X Sec	CROSS SECTION
Xing	CROSSING

Y

Yr	YEAR
Yrs	YEARS

Dist	COUNTY	ROUTE	POST MILES TOTAL PROJECT	SHEET No.	TOTAL SHEETS
03	But,Col,Gln, Sut,Yol,Yub	16,32,45 70,113,162	Var	153	195

Grace M. Tsushima
REGISTERED CIVIL ENGINEER

July 19, 2013
PLANS APPROVAL DATE

REGISTERED PROFESSIONAL ENGINEER — Grace M. Tsushima — No. C49814 — Exp. 9-30-14 — CIVIL — STATE OF CALIFORNIA

THE STATE OF CALIFORNIA OR ITS OFFICERS OR AGENTS SHALL NOT BE RESPONSIBLE FOR THE ACCURACY OR COMPLETENESS OF SCANNED COPIES OF THIS PLAN SHEET.

TO ACCOMPANY PLANS DATED 2-10-14

UNIT OF MEASUREMENT SYMBOLS:

Some of the symbols used in the project plan quantity tables and in the Bid Item List are:

TABLE A

SYMBOL USED	DEFINITIONS
ACRE	ACRE
CF	CUBIC FOOT
CY	CUBIC YARD
EA	EACH
GAL	GALLON
LB	POUND
LF	LINEAR FOOT
SQFT	SQUARE FOOT
SQYD	SQUARE YARD
STA	100 FEET
TAB	TABLET
TON	2,000 POUNDS

Some of the symbols used in the plans other than in the project plan quantity tables are:

TABLE B

SYMBOL USED	DEFINITIONS
ksi	KIPS PER SQUARE INCH
ksf	KIPS PER SQUARE FOOT
psi	POUNDS PER SQUARE INCH
psf	POUNDS PER SQUARE FOOT
lb/ft^3, pcf	POUNDS PER CUBIC FOOT
tsf	TONS PER SQUARE FOOT
mph, MPH *	MILES PER HOUR
ø	NOMINAL DIAMETER
oz	OUNCE
lb	POUND
kip	1,000 POUNDS
cal	CALORIE
ft	FOOT OR FEET
gal	GALLON

* For use on a sign panel only

STATE OF CALIFORNIA
DEPARTMENT OF TRANSPORTATION

ABBREVIATIONS (SHEET 2 OF 2)

NO SCALE

RSP A10B DATED JULY 19, 2013 SUPERSEDES STANDARD PLAN A10B DATED MAY 20, 2011 - PAGE 2 OF THE STANDARD PLANS BOOK DATED 2010.

REVISED STANDARD PLAN RSP A10B

2010 REVISED STANDARD PLAN RSP A10B

6-7-13

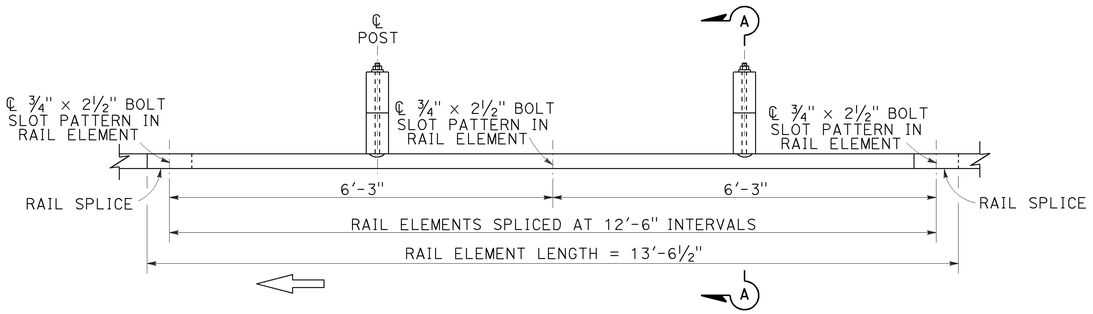

PLAN

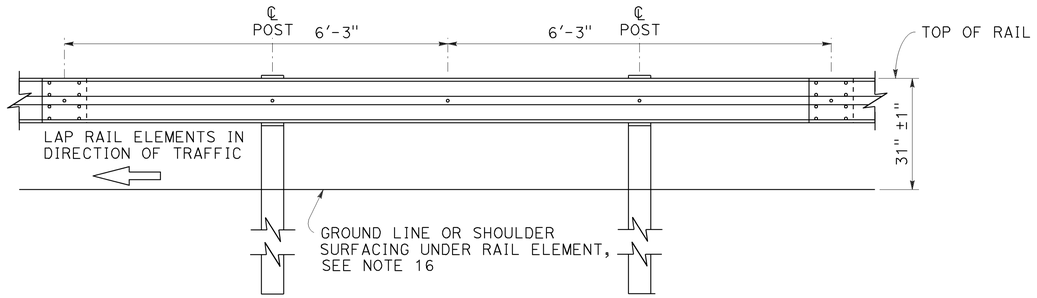

ELEVATION

MIDWEST GUARDRAIL SYSTEM WITH WOOD POST AND BLOCKS

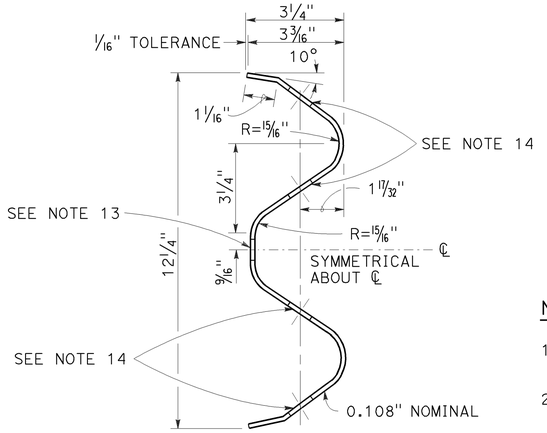

SECTION THRU RAIL ELEMENT

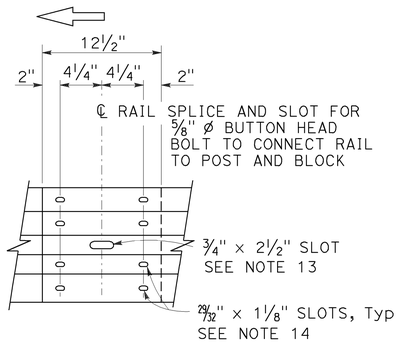

ELEVATION

RAIL ELEMENT SPLICE DETAIL

a) Connect the over lapped end of the rail elements with ⅝" ø x 1⅜" button head oval shoulder splice bolts inserted into the 29/32" x 1⅛" slots and bolted together with ⅝" ø recessed hex nuts. Recess of hex nut points toward rail element. A total of 8 bolts and nuts are to be used at each rail splice connection.

b) The ends of the rail elements are to be overlapped in the direction of traffic (see details).

c) Where end cap is to be attached to the end of a rail element, a total of 4 of the above described splice bolts and nuts are to be used.

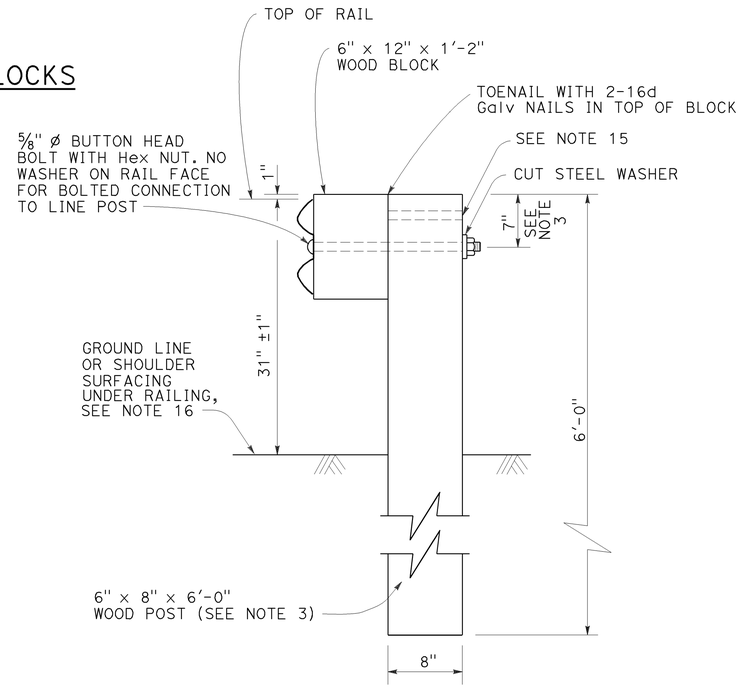

SECTION A-A

TYPICAL WOOD LINE POST INSTALLATION

See Note 4

NOTES:

1. For details of steel post installations, see Revised Standard Plan RSP A77L2.
2. For details of standard hardware used to construct MGS, see Revised Standard Plan RSP A77M1.
3. For details of wood posts and wood blocks used to construct MGS, see Revised Standard Plan RSP A77N1.
4. For additional installation details, see Revised Standard Plan RSP A77N3.
5. MGS post spacing to be 6'-3" center to center, except as otherwise noted.
6. For MGS typical layouts, see the A77P, A77Q and A77R Series of Standard Plans.
7. If railing is connected to terminal system end treatment, use 31" height terminal system end treatment.
8. For MGS end anchor details, see Revised Standard Plans RSP A77S1 and RSP A77T2.
9. For details of MGS transition to bridge railing, see Revised Standard Plan RSP A77U4.
10. For additional details of MSG connection to bridge railing, see Revised Standard Plans RSP A77U1, RSP A77U2 and RSP A77V1.
11. For MGS connection details to abutments and walls, see Revised Standard Plan RSP A77U3.
12. For typical MGS delineation and dike positioning details, see Revised Standard Plan RSP A77N4.
13. Slotted hole for bolted connection of rail element to block and post. See "Section Thru Rail Element".
14. Slotted holes for splice bolts to overlap ends of rail element. See "Section Thru Rail Element".
15. Additional hole in uppermost portion of line post is for potential future adjustments of railing height. See Revised Standard Plan RSP A77N1.
16. Install posts in soil.

Dist	COUNTY	ROUTE	POST MILES TOTAL PROJECT	SHEET No.	TOTAL SHEETS
03	But,Col,Gln, Sut,Yol,Yub	16,32,45 70,113,162	Var	154	195

Randell D. Hiatt
REGISTERED CIVIL ENGINEER

July 19, 2013
PLANS APPROVAL DATE

REGISTERED PROFESSIONAL ENGINEER — Randell D. Hiatt No. C50200 Exp. 6-30-15 CIVIL — STATE OF CALIFORNIA

THE STATE OF CALIFORNIA OR ITS OFFICERS OR AGENTS SHALL NOT BE RESPONSIBLE FOR THE ACCURACY OR COMPLETENESS OF SCANNED COPIES OF THIS PLAN SHEET.

TO ACCOMPANY PLANS DATED 2-10-14

STATE OF CALIFORNIA
DEPARTMENT OF TRANSPORTATION

MIDWEST GUARDRAIL SYSTEM STANDARD RAILING SECTION (WOOD POST WITH WOOD BLOCK)

NO SCALE

RSP A77L1 DATED JULY 19, 2013 SUPPLEMENTS STANDARD PLANS BOOK DATED 2010.

REVISED STANDARD PLAN RSP A77L1

2010 REVISED STANDARD PLAN RSP A77L1

7-3-13

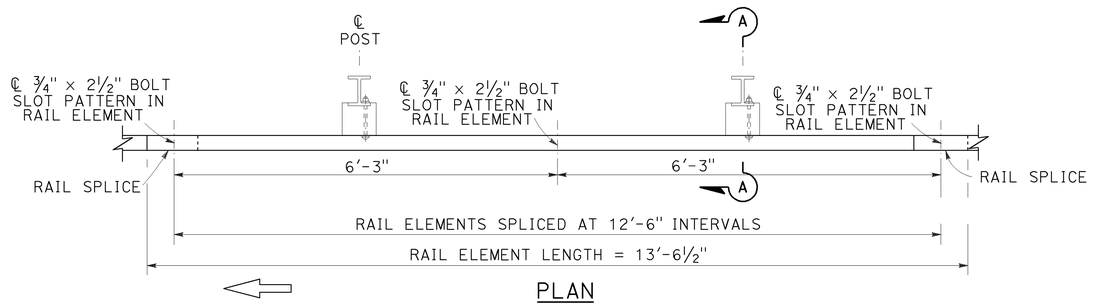

PLAN

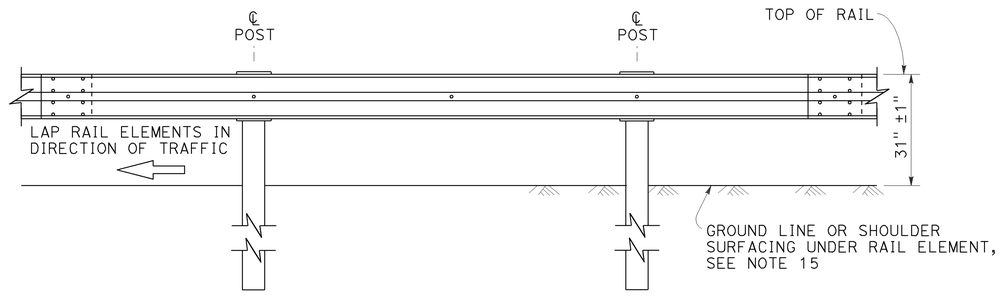

ELEVATION

MIDWEST GUARDRAIL SYSTEM WITH STEEL POSTS AND NOTCHED WOOD OR NOTCHED RECYCLED PLASTIC BLOCKS

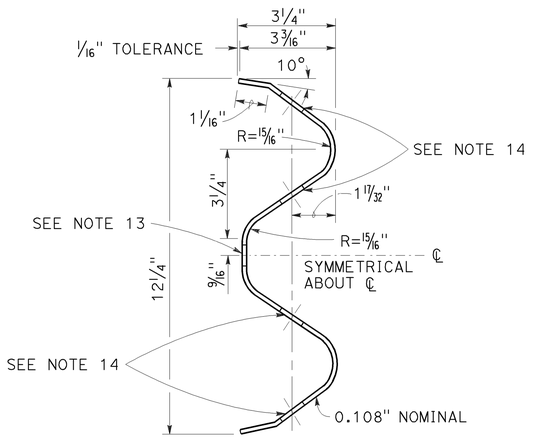

SECTION THRU RAIL ELEMENT

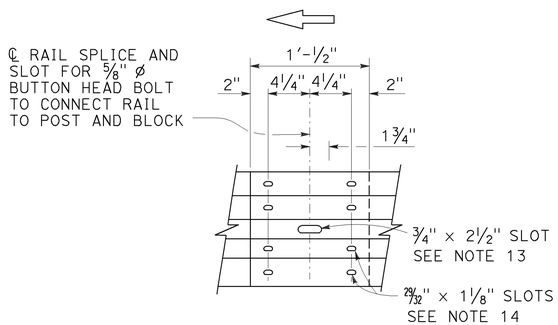

ELEVATION

RAIL ELEMENT SPLICE DETAIL

a) Connect the over lapped end of the rail elements with ⅝" ø x 1⅜" button head oval shoulder splice bolts inserted into the 29⁄32" x 1⅛" slots and bolted together with ⅝" ø recessed hex nuts. Recess of hex nut points toward rail element. A total of 8 bolts and nuts are to be used at each rail splice connection.

b) The ends of the rail elements are to be overlapped in the direction of traffic (see details).

c) Where end cap is to be attached to the end of a rail element, a total of 4 of the above described splice bolts and nuts are to be used.

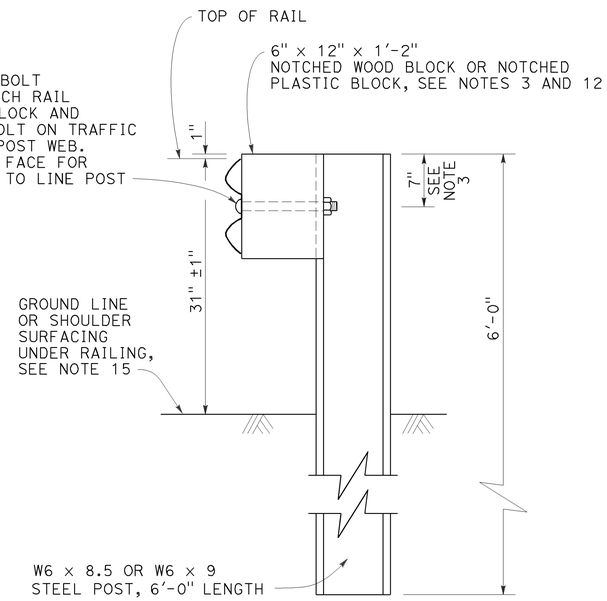

SECTION A-A

TYPICAL STEEL LINE POST INSTALLATION

See Note 4

Dist	COUNTY	ROUTE	POST MILES TOTAL PROJECT	SHEET No.	TOTAL SHEETS
03	But,Col,Gln, Sut,Yol,Yub	16,32,45 70,113,162	Var	155	195

Randell D. Hiatt
REGISTERED CIVIL ENGINEER

July 19, 2013
PLANS APPROVAL DATE

REGISTERED PROFESSIONAL ENGINEER — Randell D. Hiatt No. C50200 Exp. 6-30-15 CIVIL — STATE OF CALIFORNIA

THE STATE OF CALIFORNIA OR ITS OFFICERS OR AGENTS SHALL NOT BE RESPONSIBLE FOR THE ACCURACY OR COMPLETENESS OF SCANNED COPIES OF THIS PLAN SHEET.

TO ACCOMPANY PLANS DATED 2-10-14

NOTES:

1. For details of wood post installations, see Revised Standard Plan RSP A77L1.
2. For details of standard hardware used to construct MGS, see Revised Standard Plan RSP A77M1.
3. For details of steel posts and notched wood blocks used to construct MGS, see Revised Standard Plan RSP A77N2.
4. For additional installation details, see Revised Standard Plan RSP A77N3.
5. MGS post spacing to be 6'-3" center to center, except as otherwise noted.
6. For MGS typical layouts, see the A77P, A77Q and A77R Series of Standard Plans.
7. If railing is connected to terminal system end treatment, use 31" height terminal system end treatment.
8. For MGS end anchor details, see Revised Standard Plans RSP A77S1 and RSP A77T2.
9. For details of MGS transition to bridge railing, see Revised Standard Plan RSP A77U4.
10. For additional details of MGS connection to bridge railings, see Revised Standard Plans RSP A77U1, RSP A77U2 and RSP A77V1.
11. For dike positioning and MGS delineation details, see Revised Standard Plan RSP A77N4.
12. Notched face of block faces steel post.
13. Slotted hole for bolted connection of rail element to block and post. See "Section Thru Rail Element".
14. Slotted holes for splice bolts to overlap ends of rail element. See "Section Thru Rail Element".
15. Install posts in soil.

STATE OF CALIFORNIA
DEPARTMENT OF TRANSPORTATION

MIDWEST GUARDRAIL SYSTEM STANDARD RAILING SECTION (STEEL POST WITH NOTCHED WOOD OR NOTCHED RECYCLED PLASTIC BLOCK)

NO SCALE

RSP A77L2 DATED JULY 19, 2013 SUPPLEMENTS THE STANDARD PLANS BOOK DATED 2010.

REVISED STANDARD PLAN RSP A77L2

2010 REVISED STANDARD PLAN RSP A77L2

7-3-13

Dist	COUNTY	ROUTE	POST MILES TOTAL PROJECT	SHEET No.	TOTAL SHEETS
03	But,Col,Gln, Sut,Yol,Yub	16,32,45 70,113,162	Var	156	195

Randell D. Hiatt
REGISTERED CIVIL ENGINEER

July 19, 2013
PLANS APPROVAL DATE

REGISTERED PROFESSIONAL ENGINEER — Randell D. Hiatt — No. C50200 — Exp. 6-30-15 — CIVIL — STATE OF CALIFORNIA

THE STATE OF CALIFORNIA OR ITS OFFICERS OR AGENTS SHALL NOT BE RESPONSIBLE FOR THE ACCURACY OR COMPLETENESS OF SCANNED COPIES OF THIS PLAN SHEET.

TO ACCOMPANY PLANS DATED 2-10-14

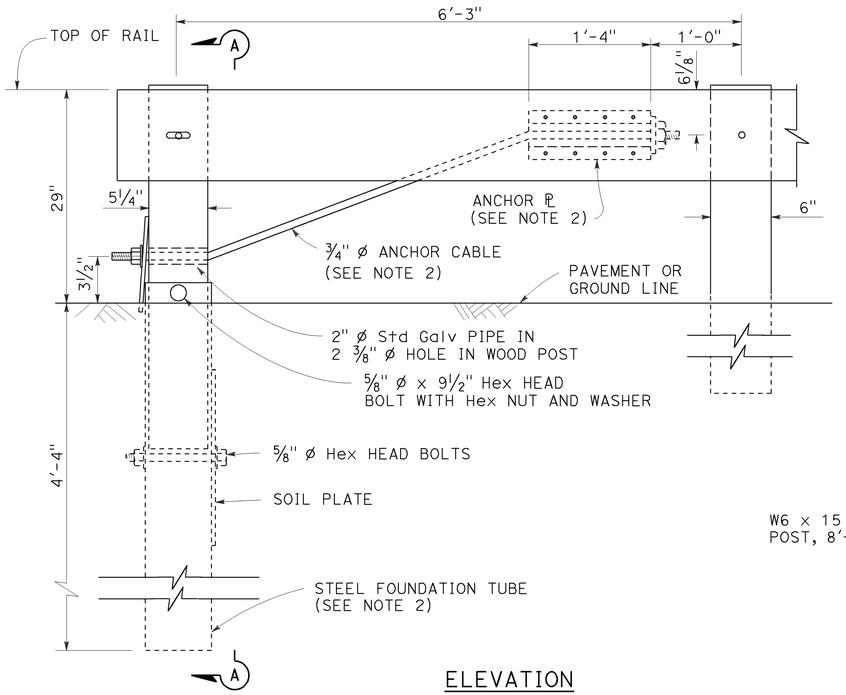

ELEVATION
END ANCHOR
ASSEMBLY (TYPE SFT)

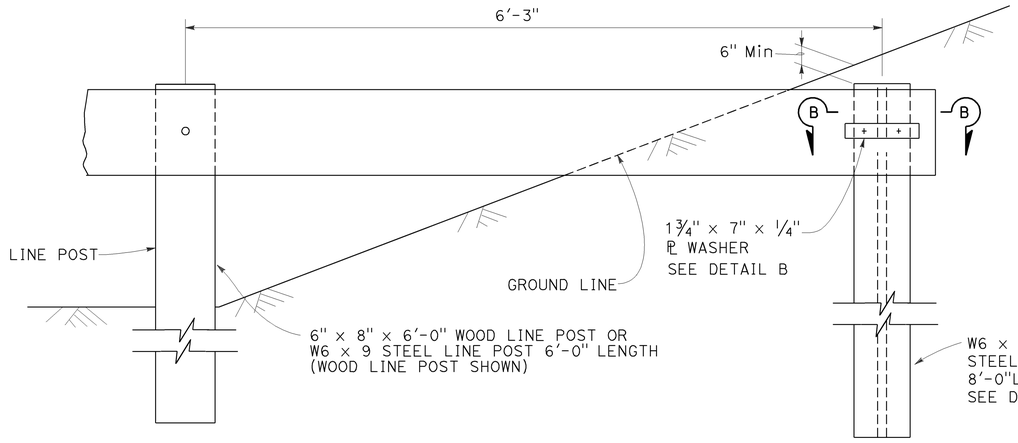

BURIED POST END ANCHOR

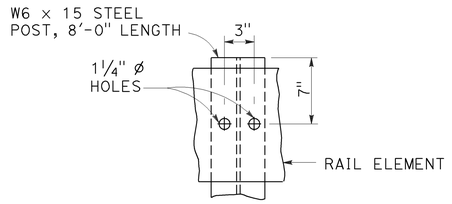

DETAIL A

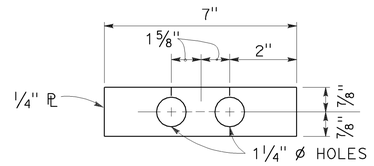

DETAIL B

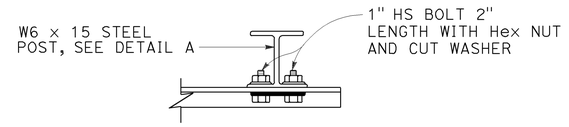

SECTION B-B

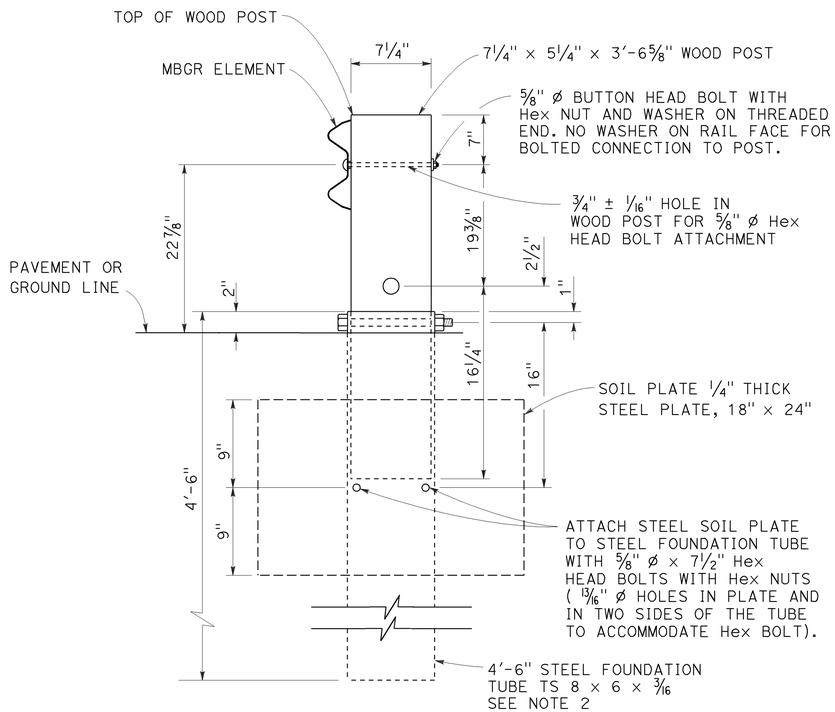

SECTION A-A

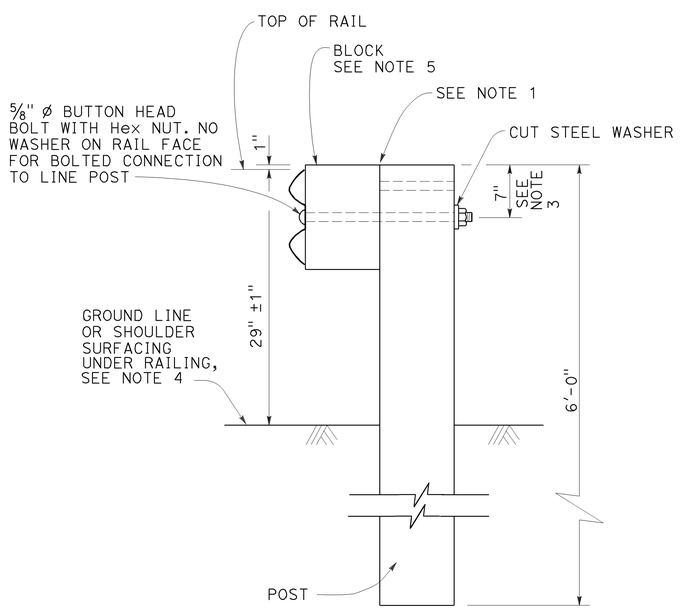

TYPICAL LINE
POST INSTALLATION

NOTES:

1. For wood post and wood block, toenail with 2-16d Galv nails in top of block. For steel post and notched wood or plastic block, notched face of block faces steel post.
2. A 6'-0" Length steel foundation tube, TS 8 x 6 x 3/16, without a soil plate, may be furnished and installed in place of the 4'-6" length steel foundation tube and soil plate shown, Minimum embadment of the 6'-0" length tube shall be 5'-9". A 5/8" Ø Hex head bolt and nut shall be installed in the hole in the 6'-0" length tube to keep the wood post from dropping into the tube.
3. To connect railing to 27" terminal system end treatment, transition the top of railing height at a ratio of 120:1 to terminal system end treatment height plus one 12'-6" standard railing section at the transitioned height for a horizontal connection to the end treatment.
4. Install posts in soil.
5. See Revised Standard Plans RSP A77N1 and RSP A77N2 for details.
6. Holes excavation in the slope to construct the buried post end anchor shall be backfilled with selected earth, placed in layers approximately 1'-0" thick. Each layer shall be moistened and thoroughly compacted.

STATE OF CALIFORNIA
DEPARTMENT OF TRANSPORTATION

METAL BEAM GUARD RAILING RECONSTRUCT INSTALLATION

NO SCALE

RSP A77L3 DATED JULY 19, 2013 SUPPLEMENTS THE STANDARD PLANS BOOK DATED 2010.

REVISED STANDARD PLAN RSP A77L3

7-16-13

Dist	COUNTY	ROUTE	POST MILES TOTAL PROJECT	SHEET No.	TOTAL SHEETS
03	But,Col,Gln, Sut,Yol,Yub	16,32,45 70,113,162	Var	157	195

Randell D. Hiatt
REGISTERED CIVIL ENGINEER

July 19, 2013
PLANS APPROVAL DATE

REGISTERED PROFESSIONAL ENGINEER
Randell D. Hiatt
No. C50200
Exp. 6-30-15
CIVIL
STATE OF CALIFORNIA

THE STATE OF CALIFORNIA OR ITS OFFICERS OR AGENTS SHALL NOT BE RESPONSIBLE FOR THE ACCURACY OR COMPLETENESS OF SCANNED COPIES OF THIS PLAN SHEET.

TO ACCOMPANY PLANS DATED 2-10-14

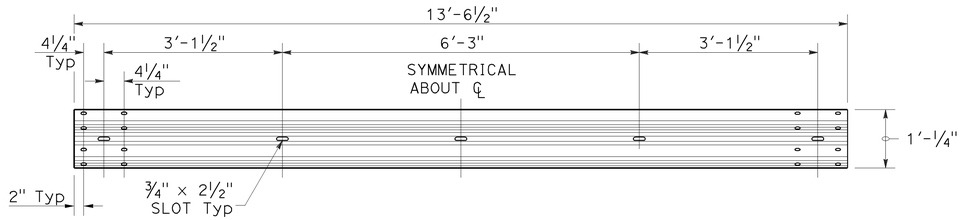

TYPICAL RAIL ELEMENT

NOTE:

1. Slotted holes for splice bolts to overlap ends of rail element.

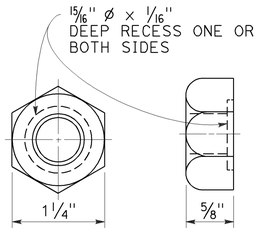

⅝" ø RECESS NUT

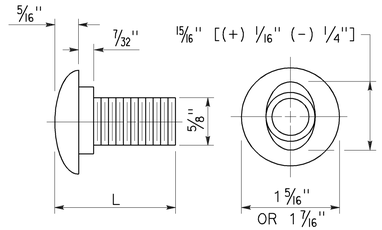

⅝" ø BUTTON HEAD BOLT

BUTTON HEAD BOLT

L	THREAD LENGTH
1⅜"	FULL THREAD LENGTH
2"	FULL THREAD LENGTH
10"	4" Min THREAD LENGTH
18"	4" Min THREAD LENGTH
20"	4" Min THREAD LENGTH
22"	4" Min THREAD LENGTH
26"	4" Min THREAD LENGTH
36"	4" Min THREAD LENGTH
** 2¾"	2" Min THREAD LENGTH
** 19"	4" Min THREAD LENGTH

** For nested rail applications.

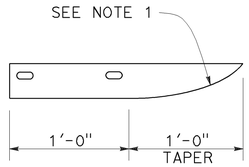

PLAN

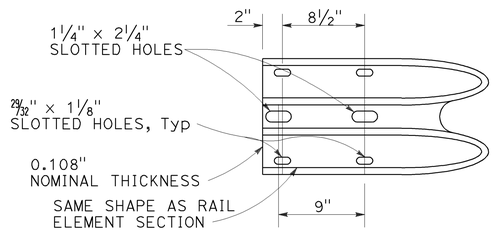

ELEVATION
END CAP
(TYPE A)

STATE OF CALIFORNIA
DEPARTMENT OF TRANSPORTATION

MIDWEST GUARDRAIL SYSTEM STANDARD HARDWARE

NO SCALE

RSP A77M1 DATED JULY 19, 2013 SUPPLEMENTS THE STANDARD PLANS BOOK DATED 2010.

REVISED STANDARD PLAN RSP A77M1

2010 REVISED STANDARD PLAN RSP A77M1

7-3-13

Dist	COUNTY	ROUTE	POST MILES TOTAL PROJECT	SHEET No.	TOTAL SHEETS
03	But,Col,Gln, Sut,Yol,Yub	16,32,45 70,113,162	Var	158	195

Randell D. Hiatt
REGISTERED CIVIL ENGINEER

July 19, 2013
PLANS APPROVAL DATE

REGISTERED PROFESSIONAL ENGINEER
Randell D. Hiatt
No. C50200
Exp. 6-30-15
CIVIL
STATE OF CALIFORNIA

THE STATE OF CALIFORNIA OR ITS OFFICERS OR AGENTS SHALL NOT BE RESPONSIBLE FOR THE ACCURACY OR COMPLETENESS OF SCANNED COPIES OF THIS PLAN SHEET.

TO ACCOMPANY PLANS DATED 2-10-14

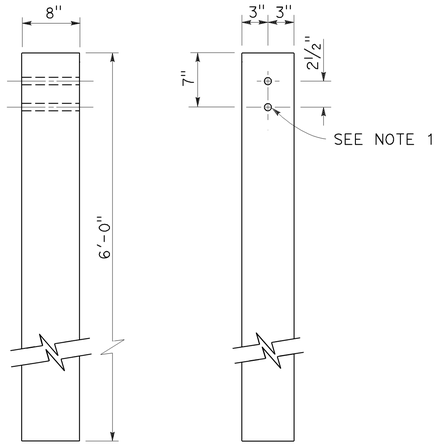

SIDE FRONT

6" x 8" WOOD POST
See Note 3

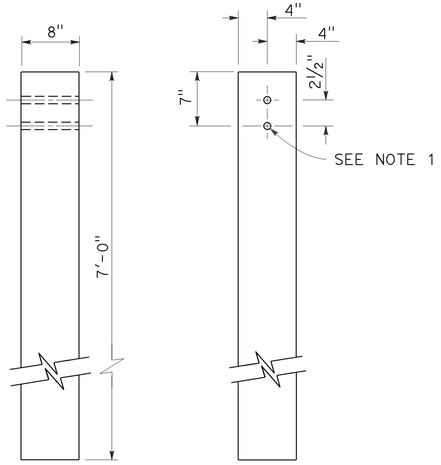

SIDE FRONT

8" x 8" WOOD POST
See Note 4

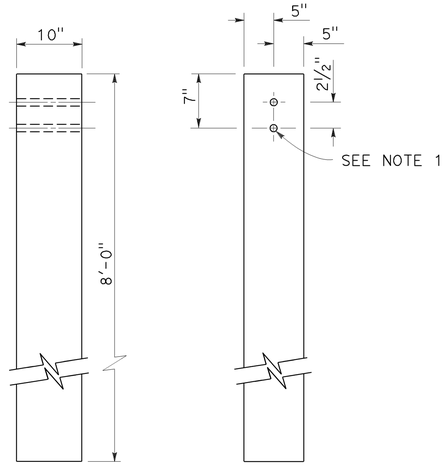

SIDE FRONT

10" x 10" WOOD POST
See Note 5

NOTES:

1. All holes in wood posts and blocks shall be ¾" Dia ± 1/16".
2. Dimensions shown for wood post are nominal.
3. This post and block combination used for standard line post sections of MGS.
4. This post and 8" x 12" block combination used for line post sections of MGS on narrow roadways.
5. This post and 8" x 12" block combination is typically used where strengthened line post sections of MGS are warranted to shield fixed objects.
6. See Revised Standard Plan RSP A77L3 for use of 6" x 8" and 8" x 8" wood blocks.

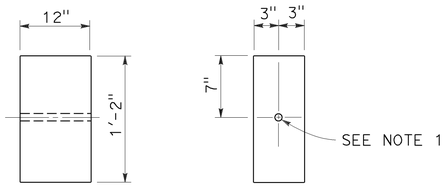

SIDE FRONT

6" x 12" WOOD BLOCK
See Note 3

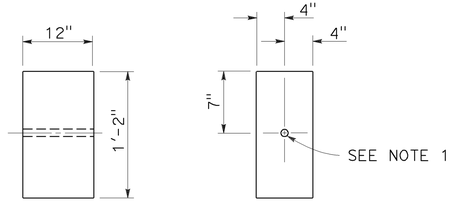

SIDE FRONT

8" x 12" WOOD BLOCK

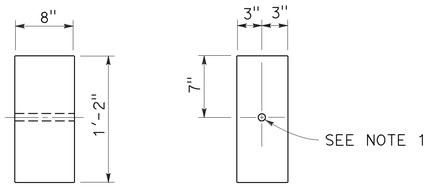

SIDE FRONT

6" x 8" WOOD BLOCK
Only for use with metal beam guard rail see Note 6

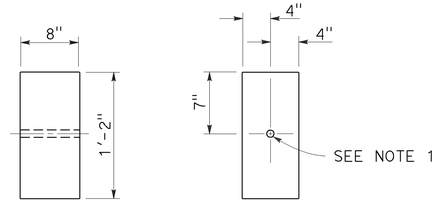

SIDE FRONT

8" x 8" WOOD BLOCK
Only for use with metal beam guard rail see Note 6

STATE OF CALIFORNIA
DEPARTMENT OF TRANSPORTATION

MIDWEST GUARDRAIL SYSTEM WOOD POST AND WOOD BLOCK DETAILS

NO SCALE

RSP A77N1 DATED JULY 19, 2013 SUPPLEMENTS THE STANDARD PLANS BOOK DATED 2010.

REVISED STANDARD PLAN RSP A77N1

2010 REVISED STANDARD PLAN RSP A77N1

7-3-13

Dist	COUNTY	ROUTE	POST MILES TOTAL PROJECT	SHEET No.	TOTAL SHEETS
03	But,Col,Gln, Sut,Yol,Yub	16,32,45 70,113,162	Var	159	195

Randell D. Hiatt
REGISTERED CIVIL ENGINEER

November 15, 2013
PLANS APPROVAL DATE

REGISTERED PROFESSIONAL ENGINEER — Randell D. Hiatt — No. C50200 — Exp. 6-30-15 — CIVIL — STATE OF CALIFORNIA

THE STATE OF CALIFORNIA OR ITS OFFICERS OR AGENTS SHALL NOT BE RESPONSIBLE FOR THE ACCURACY OR COMPLETENESS OF SCANNED COPIES OF THIS PLAN SHEET.

TO ACCOMPANY PLANS DATED 2-10-14

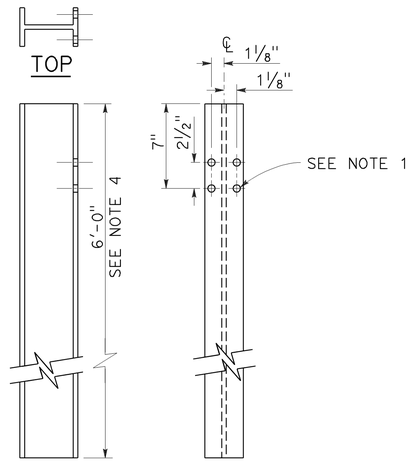

W6 x 9 OR W6 x 8.5
STEEL POST
See Note 4

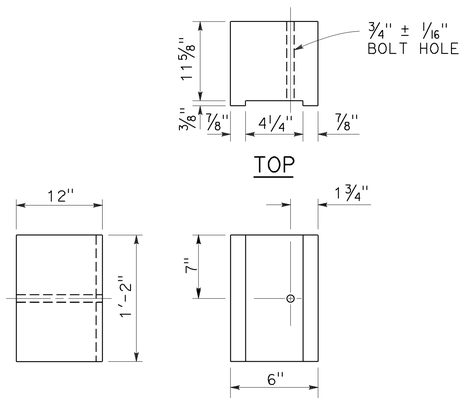

6" x 12"
NOTCHED WOOD BLOCK
See Notes 2 and 3

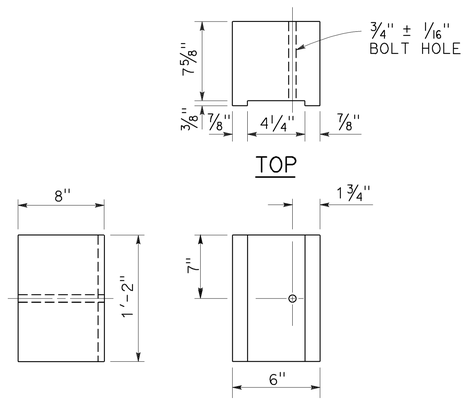

6" x 8"
NOTCHED WOOD BLOCK
Only for use with metal beam guard railing. See Note 5

NOTES:

1. All holes in steel post shall be 13/16" Dia maximum.
2. Dimensions shown for wood block are nominal.
3. Notched face of block faces steel post.
4. 6'-0" length posts to be used for typical roadway installation. See Revised Standard Plan RSP A77N3.
5. See Revised Standard Plan RSP A77L3 for use of 6" x 8" and 8" x 8" notched wood blocks.
6. This post and 8" x 12" block combination to be used for line post sections of MGS on narrow roadways and where strengthened line post sections of MGS are warranted to shield fixed objects.

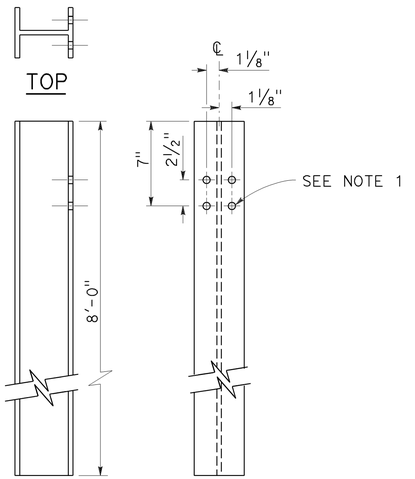

W6 x 15
STEEL POST
See Note 6

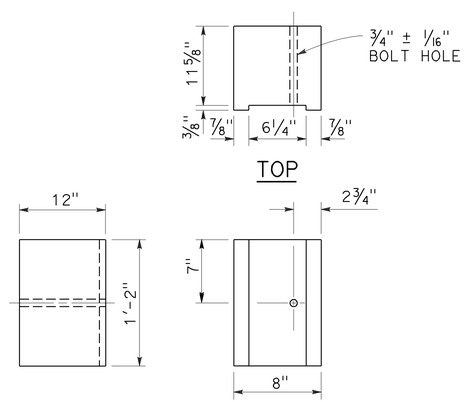

8" x 12"
NOTCHED WOOD BLOCK
See Notes 2 and 3

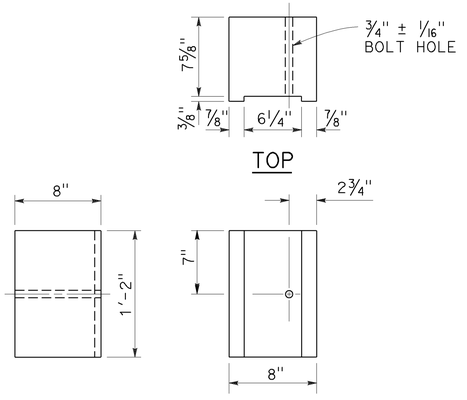

8" x 8"
NOTCHED WOOD BLOCK
Only for use with metal beam guard railing. See Note 5

STATE OF CALIFORNIA
DEPARTMENT OF TRANSPORTATION

MIDWEST GUARDRAIL SYSTEM STEEL POST AND NOTCHED WOOD BLOCK DETAILS

NO SCALE

RSP A77N2 DATED NOVEMBER 15, 2013 SUPERSEDES RSP A77N2
DATED JULY 19, 2013 THAT SUPPLEMENTS THE STANDARD PLANS BOOK DATED 2010.

REVISED STANDARD PLAN RSP A77N2

2010 REVISED STANDARD PLAN RSP A77N2

10-29-13

Dist	COUNTY	ROUTE	POST MILES TOTAL PROJECT	SHEET No.	TOTAL SHEETS
03	But,Col,Gln, Sut,Yol,Yub	16,32,45 70,113,162	Var	160	195

Randell D. Hiatt
REGISTERED CIVIL ENGINEER

November 15, 2013
PLANS APPROVAL DATE

REGISTERED PROFESSIONAL ENGINEER
Randell D. Hiatt
No. C50200
Exp. 6-30-15
CIVIL
STATE OF CALIFORNIA

THE STATE OF CALIFORNIA OR ITS OFFICERS OR AGENTS SHALL NOT BE RESPONSIBLE FOR THE ACCURACY OR COMPLETENESS OF SCANNED COPIES OF THIS PLAN SHEET.

TO ACCOMPANY PLANS DATED 2-10-14

2010 REVISED STANDARD PLAN RSP A77N3

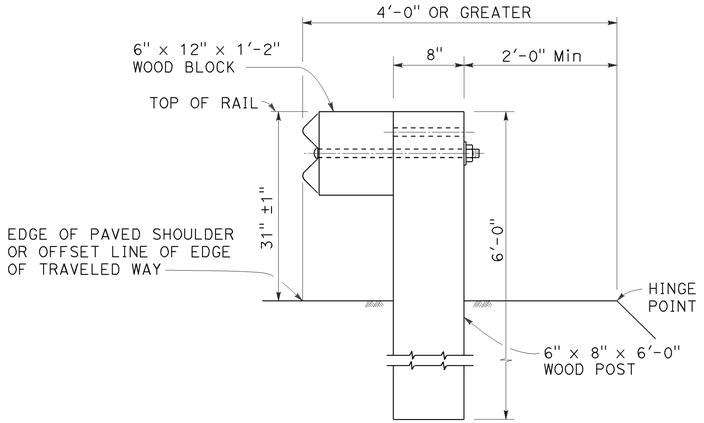

DETAIL A

TYPICAL ROADWAY INSTALLATION

See Note 1

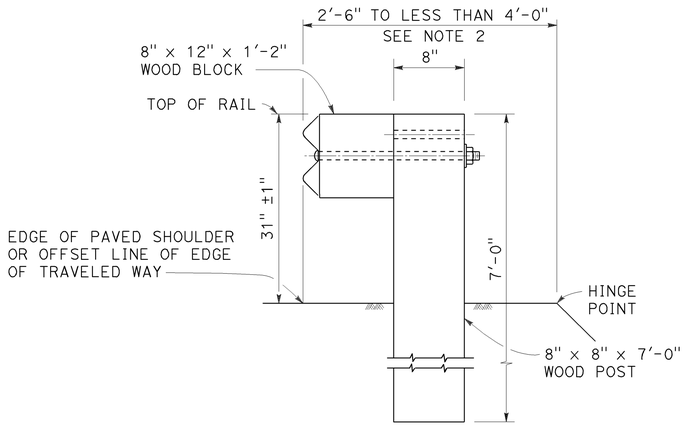

DETAIL B

NARROW ROADWAY INSTALLATION

See Note 1

POST EMBEDMENT

NOTES:

1. These installation details also applicable to steel line post installations. For Detail A, C, and D, where steel line post installations are constructed, W6 x 8.5 or W6 x 9 steel post, 6'-0" in length, with 6" x 12" x 1'-2" notched wood blocks or notched recycled plastic blocks are to be used in place of the size of wood post and wood block shown. For Detail B, where steel line post installations are constructed, W6 x 15 steel post, 8'-0" in length, with 8" x 12" x 1'-2" notched wood blocks or notched recycled plastic blocks are to be used in place of the size of wood post and wood block shown. For additional installation details, see Revised Standard Plan RSP A77L1 and RSP A77L2.
2. Where the distance between the face of the rail and the hinge point is less than 2'-6", see the Project Plans for special details.
3. For dike positioning with MGS installations, see Revised Standard Plan RSP A77N4.

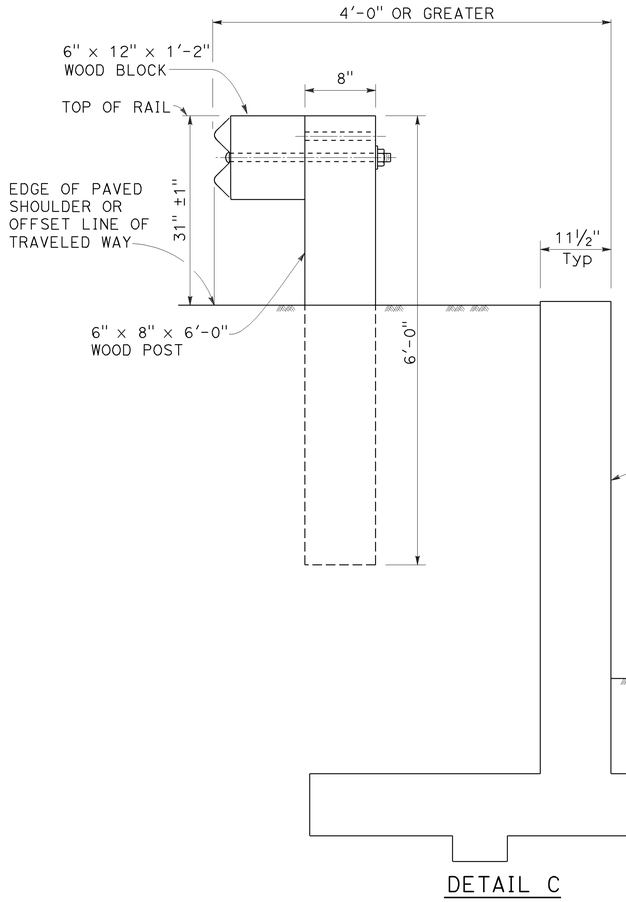

DETAIL C

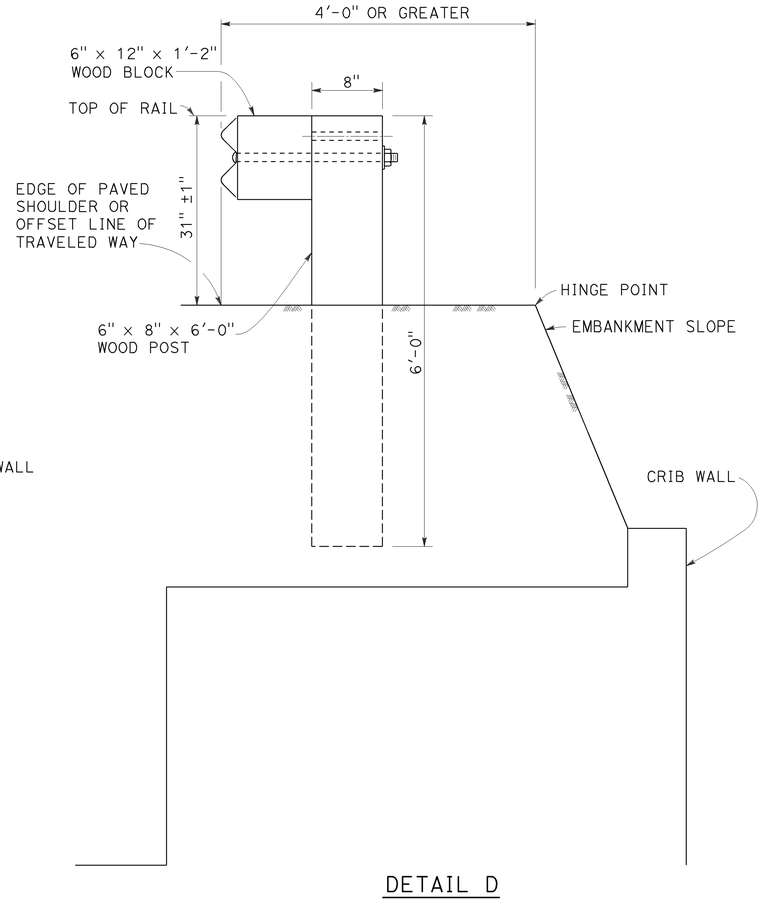

DETAIL D

INSTALLATION AT EARTH RETAINING WALLS

STATE OF CALIFORNIA
DEPARTMENT OF TRANSPORTATION

MIDWEST GUARDRAIL SYSTEM TYPICAL LINE POST EMBEDMENT AND HINGE POINT OFFSET DETAILS

NO SCALE

RSP A77N3 DATED NOVEMBER 15, 2013 SUPERSEDES RSP A77N3 DATED JULY 19, 2013 THAT SUPPLEMENTS THE STANDARD PLANS BOOK DATED 2010.

REVISED STANDARD PLAN RSP A77N3

10-29-13

Dist	COUNTY	ROUTE	POST MILES TOTAL PROJECT	SHEET No.	TOTAL SHEETS
03	But,Col,Gln, Sut,Yol,Yub	16,32,45 70,113,162	Var	161	195

Randell D. Hiatt
REGISTERED CIVIL ENGINEER

July 19, 2013
PLANS APPROVAL DATE

REGISTERED PROFESSIONAL ENGINEER
Randell D. Hiatt
No. C50200
Exp. 6-30-15
CIVIL
STATE OF CALIFORNIA

THE STATE OF CALIFORNIA OR ITS OFFICERS OR AGENTS SHALL NOT BE RESPONSIBLE FOR THE ACCURACY OR COMPLETENESS OF SCANNED COPIES OF THIS PLAN SHEET.

TO ACCOMPANY PLANS DATED 2-10-14

NOTES:

1. When necessary to place dike more than 7" in front of face of MGS, only Type C dike may be used. For dike details, see Revised Standard Plan RSP A87B.
2. For standard railing post embedment, see Revised Standard Plan RSP A77N3.
3. MGS delineation to be used where shown on the Project Plans.
4. When dike or curb is placed under MGS, the maximum height of the dike or curb shall be 6". Mountable dike should not be used. For dike and curb details, see Revised Standard Plans RSP A87A and RSP A87B.
5. For details of typical distance between the face of rail and hinge point, see Revised Standard Plan RSP A77N3.
6. For steel line posts, use 1/4 - 20 self-tapping screws in 0.22" diameter holes or 1/4" bolts in 9/32" diameter holes.

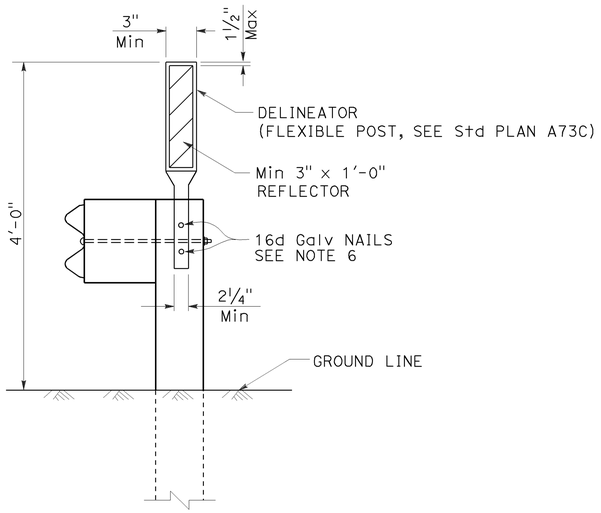

MGS DELINEATION
See Note 3

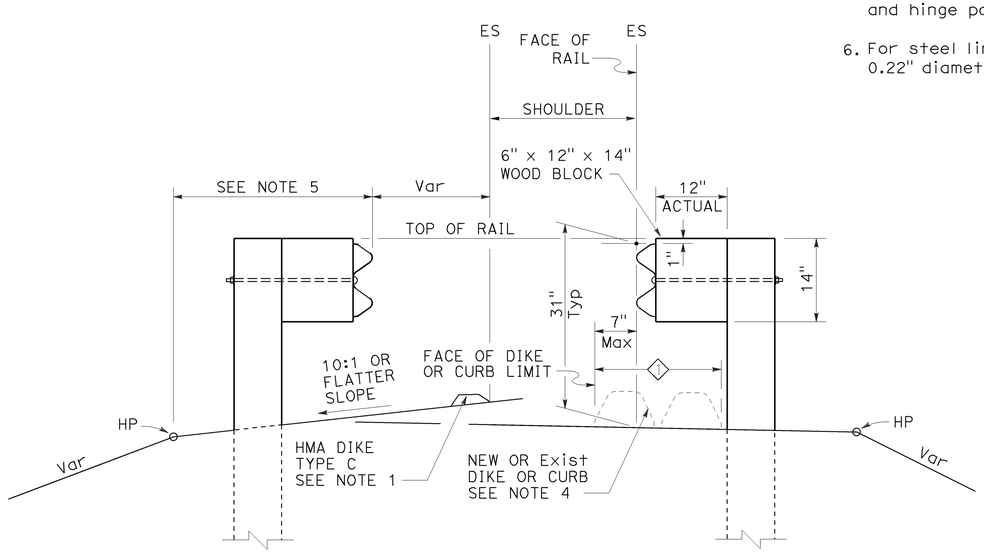

DIKE POSITIONING
See Note 1

◇1 PERMISSIBLE DIKE OR CURB PLACEMENT AREA

STATE OF CALIFORNIA
DEPARTMENT OF TRANSPORTATION

MIDWEST GUARDRAIL SYSTEM TYPICAL RAILING DELINEATION AND DIKE POSITIONING DETAILS

NO SCALE

RSP A77N4 DATED JULY 19, 2013 SUPPLEMENTS THE STANDARD PLANS BOOK DATED 2010.

REVISED STANDARD PLAN RSP A77N4

2010 REVISED STANDARD PLAN RSP A77N4

7-10-13

Dist	COUNTY	ROUTE	POST MILES TOTAL PROJECT	SHEET No.	TOTAL SHEETS
03	But,Col,Gln, Sut,Yol,Yub	16,32,45 70,113,162	Var	162	195

Randell D. Hiatt
REGISTERED CIVIL ENGINEER

July 19, 2013
PLANS APPROVAL DATE

REGISTERED PROFESSIONAL ENGINEER
Randell D. Hiatt
No. C50200
Exp. 6-30-15
CIVIL
STATE OF CALIFORNIA

THE STATE OF CALIFORNIA OR ITS OFFICERS OR AGENTS SHALL NOT BE RESPONSIBLE FOR THE ACCURACY OR COMPLETENESS OF SCANNED COPIES OF THIS PLAN SHEET.

TO ACCOMPANY PLANS DATED 2-10-14

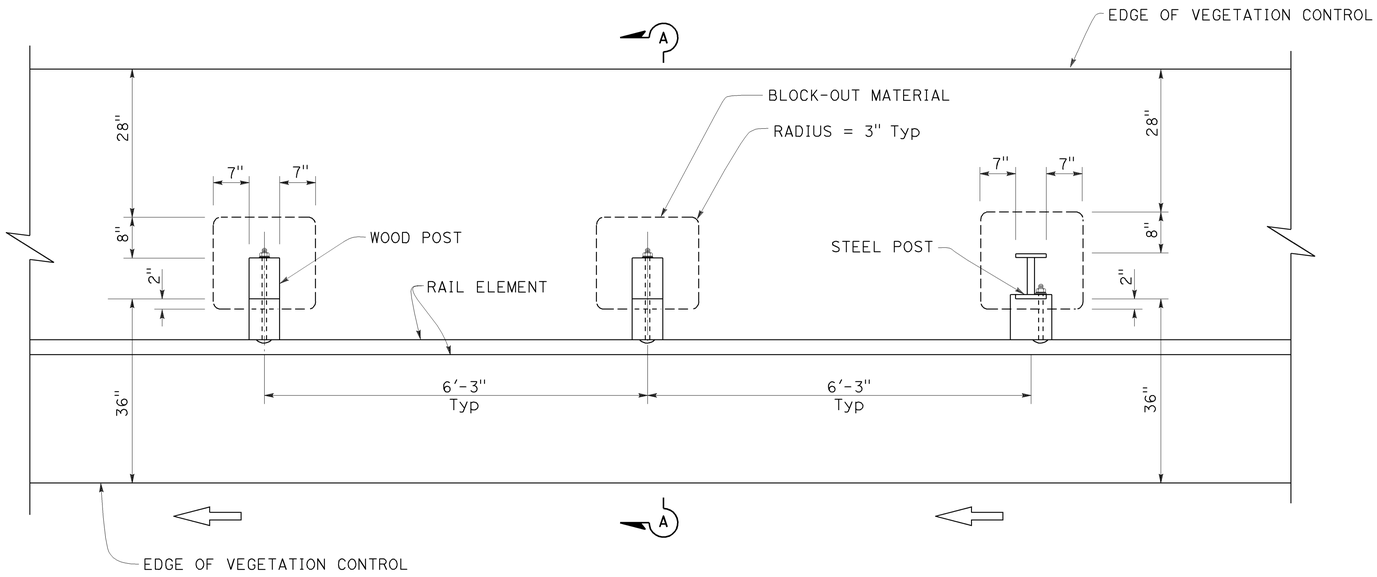

PLAN

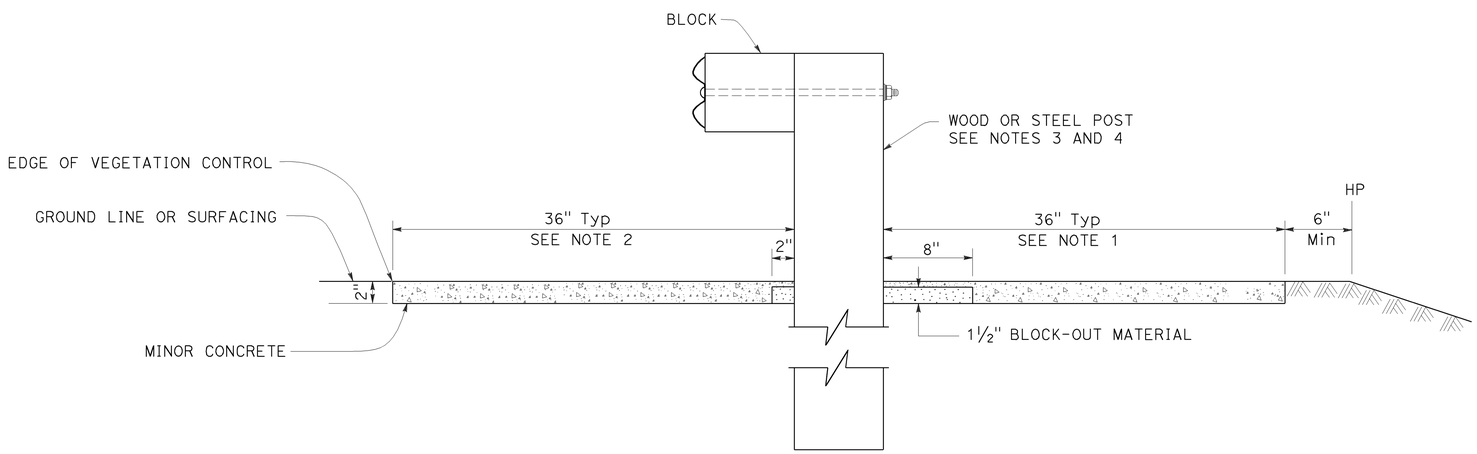

SECTION A-A

NOTES:

1. Where the distance between back of post and hinge point is less than 42", construct vegetation control to 6" from hinge point while maintaining the 8" block-out at back of post. If the 8" block-out at back of post can not be maintained, construct vegetation control flush with the back edge of post.
2. Where dike is constructed under railing, construct vegetation control to back edge of dike. Where paved shoulder is constructed within 36" in front of the post, construct vegetation control to the edge of paved shoulder.
3. For wood post sizes, see Revised Standard Plan RSP A77N1.
4. For steel post sizes, see Revised Standard Plan RSP A77N2.
5. For details not shown, see Revised Standard Plans RSP A77L1 and RSP A77L2.

STATE OF CALIFORNIA
DEPARTMENT OF TRANSPORTATION

MIDWEST GUARDRAIL SYSTEM
TYPICAL VEGETATION CONTROL
STANDARD RAILING SECTION

NO SCALE

RSP A77N5 DATED JULY 19, 2013 SUPPLEMENTS THE STANDARD PLANS BOOK DATED 2010.

REVISED STANDARD PLAN RSP A77N5

2010 REVISED STANDARD PLAN RSP A77N5

7-3-13

Dist	COUNTY	ROUTE	POST MILES TOTAL PROJECT	SHEET No.	TOTAL SHEETS
03	But,Col,Gln, Sut,Yol,Yub	16,32,45 70,113,162	Var	163	195

Randell D. Hiatt
REGISTERED CIVIL ENGINEER

July 19, 2013
PLANS APPROVAL DATE

REGISTERED PROFESSIONAL ENGINEER
Randell D. Hiatt
No. C50200
Exp. 6-30-15
CIVIL
STATE OF CALIFORNIA

THE STATE OF CALIFORNIA OR ITS OFFICERS OR AGENTS SHALL NOT BE RESPONSIBLE FOR THE ACCURACY OR COMPLETENESS OF SCANNED COPIES OF THIS PLAN SHEET.

TO ACCOMPANY PLANS DATED 2-10-14

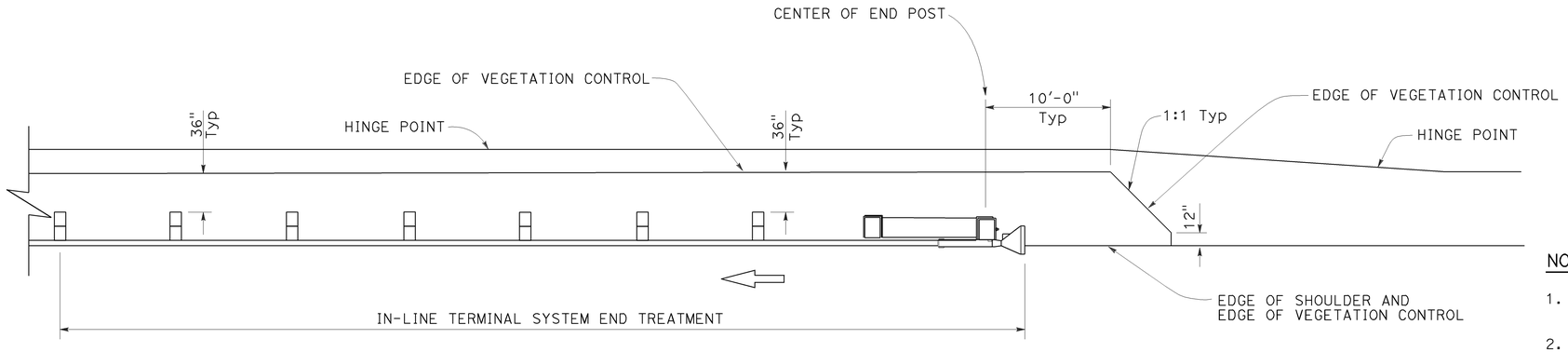

PLAN

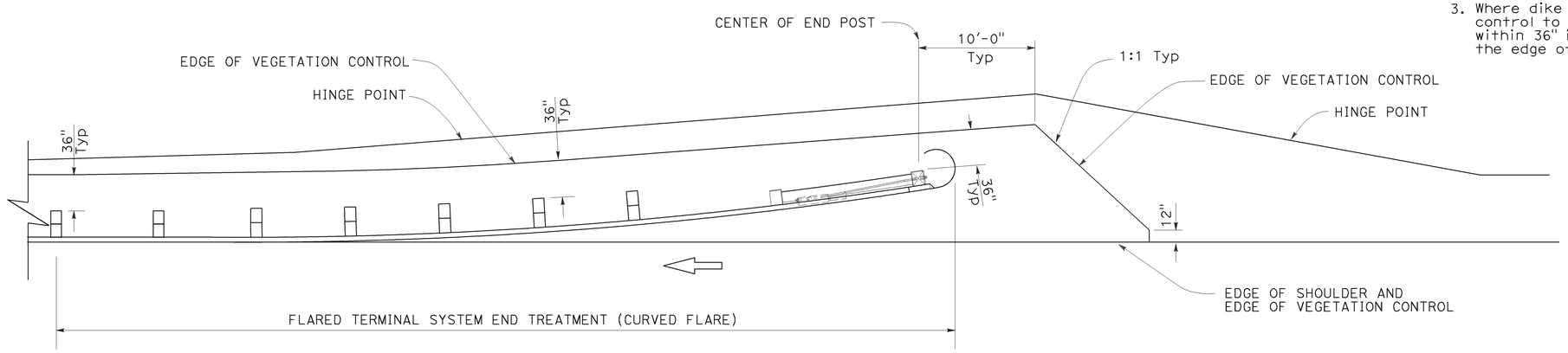

PLAN

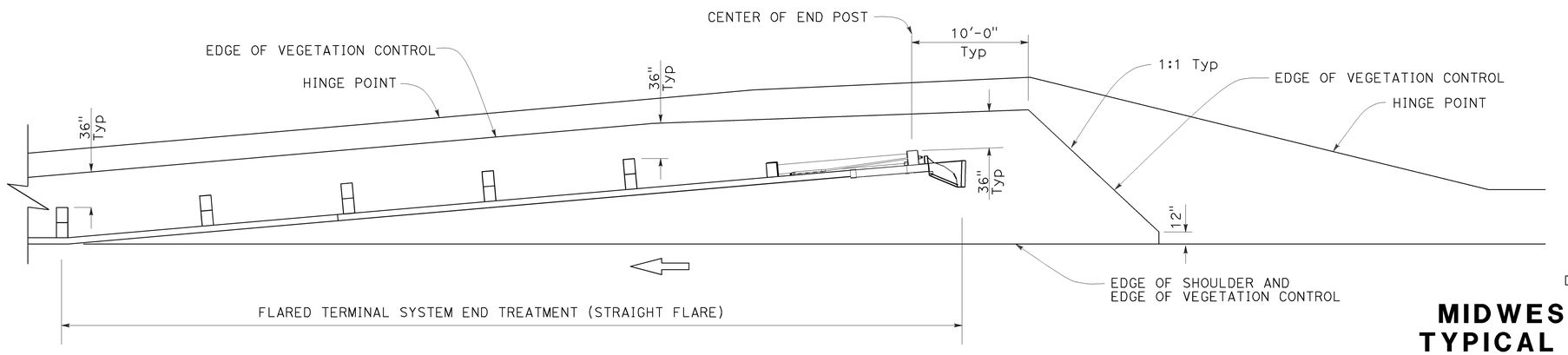

PLAN

NOTES:

1. See Revised Standard Plan RSP A77N5 for additional vegetation control details.
2. Where the distance between back of post and hinge point is less than 42", construct vegetation control to 6" from hinge point while maintaining the 8" block-out at back of post. If the 8" block-out at back of post can not be maintained, construct vegetation control flush with the back edge of post.
3. Where dike is constructed under railing, construct vegetation control to back edge of dike. Where paved shoulder is constructed within 36" in front of the post, construct vegetation control to the edge of paved shoulder.

STATE OF CALIFORNIA
DEPARTMENT OF TRANSPORTATION

MIDWEST GUARDRAIL SYSTEM TYPICAL VEGETATION CONTROL FOR TERMINAL SYSTEM END TREATMENTS

NO SCALE

RSP A77N6 DATED JULY 19, 2013 SUPPLEMENTS THE STANDARD PLANS BOOK DATED 2010.

REVISED STANDARD PLAN RSP A77N6

2010 REVISED STANDARD PLAN RSP A77N6

6-12-13

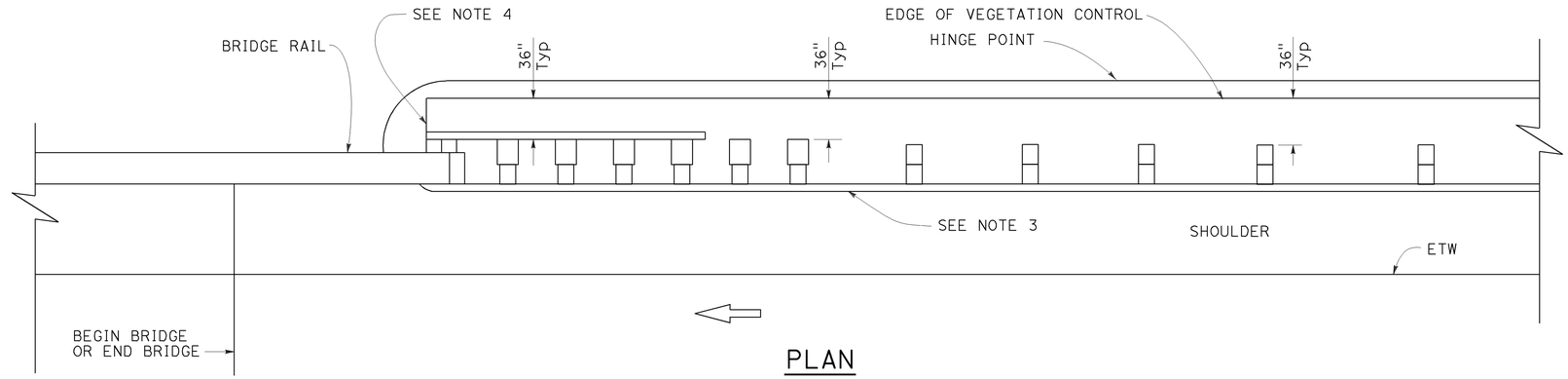

PLAN

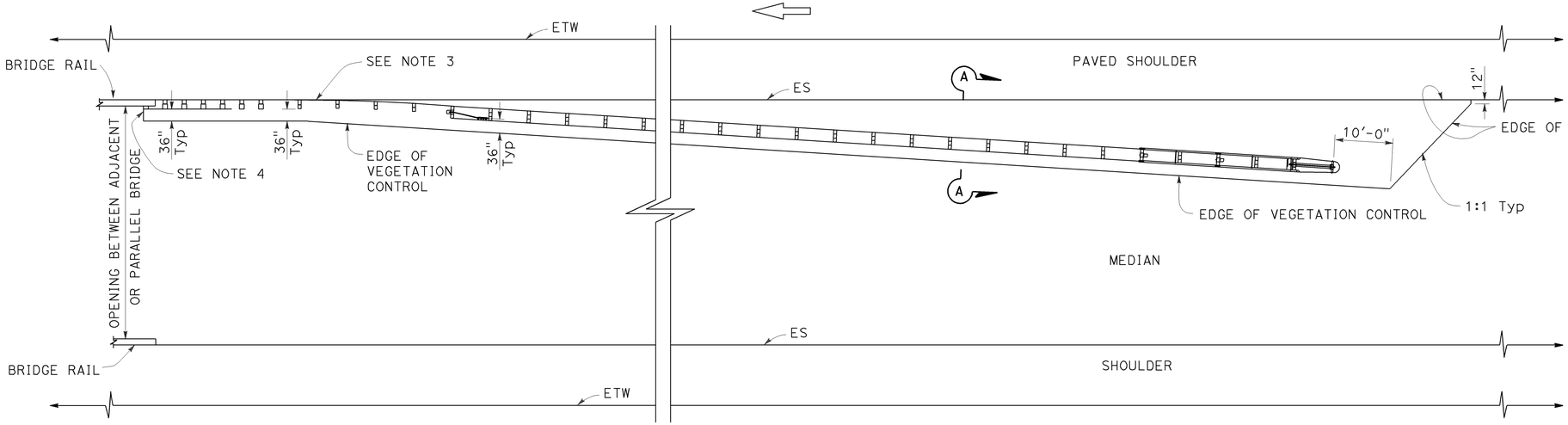

PLAN

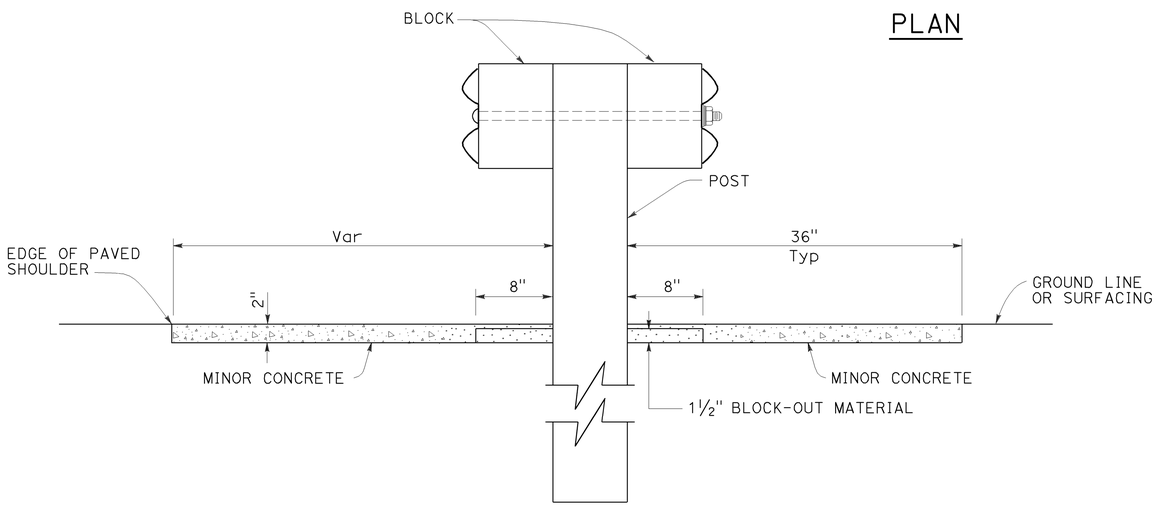

SECTION A-A

NOTES:

1. See Revised Standard Plan RSP A77N5 for additional vegetation control details.
2. Where the distance between back of post and hinge point is less than 42", construct vegetation control to 6" from hinge point while maintaining the 8" block-out at back of post. If the 8" block-out at back of post can not be maintained, construct vegetation control flush with the back edge of post.
3. Where dike is constructed under railing, construct vegetation control to back edge of dike. Where paved shoulder is constructed within 36" in front of the post, construct vegetation control to the edge of paved shoulder.
4. End vegetation control at end of backside rail element.

STATE OF CALIFORNIA
DEPARTMENT OF TRANSPORTATION

MIDWEST GUARDRAIL SYSTEM TYPICAL VEGETATION CONTROL AT STRUCTURE APPROACH

NO SCALE

RSP A77N7 DATED JULY 19, 2013 SUPPLEMENTS THE STANDARD PLANS BOOK DATED 2010.

REVISED STANDARD PLAN RSP A77N7

Dist	COUNTY	ROUTE	POST MILES TOTAL PROJECT	SHEET No.	TOTAL SHEETS
03	But,Col,Gln, Sut,Yol,Yub	16,32,45 70,113,162	Var	164	195

Randell D. Hiatt
REGISTERED CIVIL ENGINEER

July 19, 2013
PLANS APPROVAL DATE

REGISTERED PROFESSIONAL ENGINEER
Randell D. Hiatt
No. C50200
Exp. 6-30-15
CIVIL
STATE OF CALIFORNIA

THE STATE OF CALIFORNIA OR ITS OFFICERS OR AGENTS SHALL NOT BE RESPONSIBLE FOR THE ACCURACY OR COMPLETENESS OF SCANNED COPIES OF THIS PLAN SHEET.

TO ACCOMPANY PLANS DATED 2-10-14

2010 REVISED STANDARD PLAN RSP A77N7

6-12-13

Dist	COUNTY	ROUTE	POST MILES TOTAL PROJECT	SHEET No.	TOTAL SHEETS
03	But,Col,Gln, Sut,Yol,Yub	16,32,45 70,113,162	Var	165	195

Randell D. Hiatt
REGISTERED CIVIL ENGINEER

July 19, 2013
PLANS APPROVAL DATE

REGISTERED PROFESSIONAL ENGINEER
Randell D. Hiatt
No. C50200
Exp. 6-30-15
CIVIL
STATE OF CALIFORNIA

THE STATE OF CALIFORNIA OR ITS OFFICERS OR AGENTS SHALL NOT BE RESPONSIBLE FOR THE ACCURACY OR COMPLETENESS OF SCANNED COPIES OF THIS PLAN SHEET.

TO ACCOMPANY PLANS DATED 2-10-14

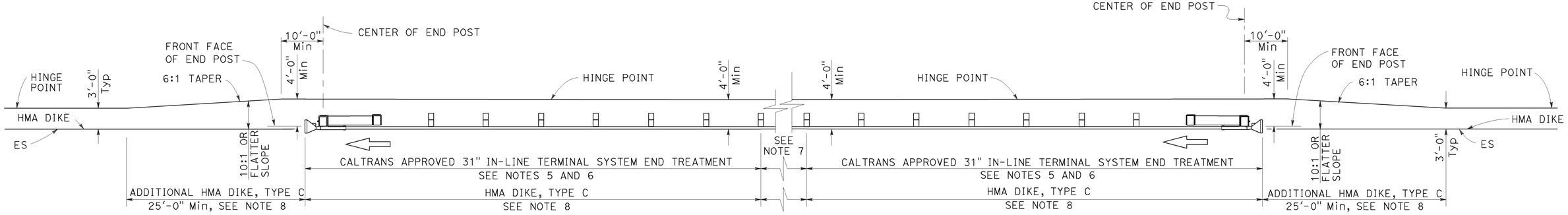

TYPE 11D LAYOUT

(Embankment MGS installation with
31" in-line end treatment at each end of railing)
See Note 4

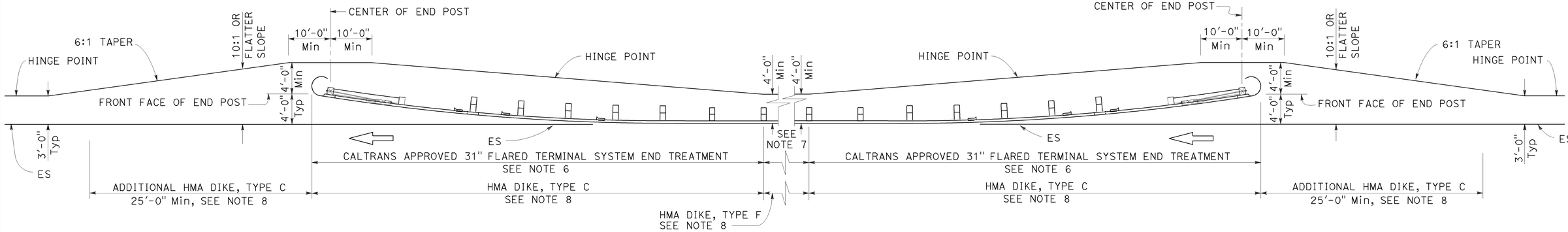

TYPE 11E LAYOUT

(Embankment MGS installation with
31" flared end treatment at each end of railing)
See Note 4

NOTES:

1. Line post, blocks and hardware to be used are shown on Revised Standard Plans RSP A77L1, RSP A77L2, RSP A77M1, RSP A77N1 and RSP A77N2.
2. MGS post spacing to be 6'-3" center to center, except as otherwise noted.
3. Except as noted, line posts are 6" x 8" x 6'-0" wood with 6" x 12" x 1'-2" wood blocks. W6 x 8.5 or W6 x 9 steel posts, 6'-0" in length, with 6" x 12" x 1'-2" notched wood blocks or plastic blocks may be used for 6" x 8" x 6'-0" wood post with 6" x 12" x 1'-2" wood blocks where applicable and when specified.
4. Layout Types 11D through 11L, shown on the A77P Series of Standard Plans, are typically used where MGS is recommended to shield embankment slopes and a crashworthy 31" end treatment is required for both directions of traffic.
5. 31" in-line terminal system end treatments are used where site conditions will not accommodate a flared end treatment.
6. The type of 31" terminal system end treatment to be used will be shown on the Project Plans.
7. Dependent on site conditions (embankment height and side slope), construction of additional MGS (length equal to multiples of 12'-6" with 6'-3" post spacing) may be advisable.
8. Where placement of dike is required with MGS installations, see Revised Standard Plan RSP A77N4 for dike positioning details.

STATE OF CALIFORNIA
DEPARTMENT OF TRANSPORTATION

MIDWEST GUARDRAIL SYSTEM TYPICAL LAYOUTS FOR EMBANKMENTS

NO SCALE

RSP A77P2 DATED JULY 19, 2013 SUPPLEMENTS THE STANDARD PLANS BOOK DATED 2010.

REVISED STANDARD PLAN RSP A77P2

2010 REVISED STANDARD PLAN RSP A77P2

6-19-13

Dist	COUNTY	ROUTE	POST MILES TOTAL PROJECT	SHEET No.	TOTAL SHEETS
03	But,Col,Gln, Sut,Yol,Yub	16,32,45 70,113,162	Var	166	195

Randell D. Hiatt
REGISTERED CIVIL ENGINEER

July 19, 2013
PLANS APPROVAL DATE

REGISTERED PROFESSIONAL ENGINEER
Randell D. Hiatt
No. C50200
Exp. 6-30-15
CIVIL
STATE OF CALIFORNIA

THE STATE OF CALIFORNIA OR ITS OFFICERS OR AGENTS SHALL NOT BE RESPONSIBLE FOR THE ACCURACY OR COMPLETENESS OF SCANNED COPIES OF THIS PLAN SHEET.

TO ACCOMPANY PLANS DATED 2-10-14

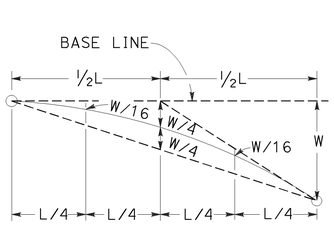

TYPICAL PARABOLIC LAYOUT

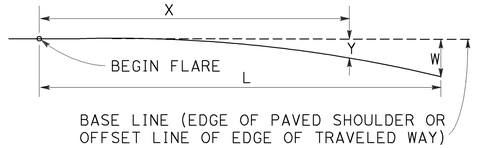

$$Y = \frac{WX^2}{L^2}$$

Y = OFFSET FROM BASE LINE
W = MAXIMUM OFFSET
X = DISTANCE ALONG BASE LINE
L = LENGTH OF FLARE

PARABOLIC FLARE OFFSETS

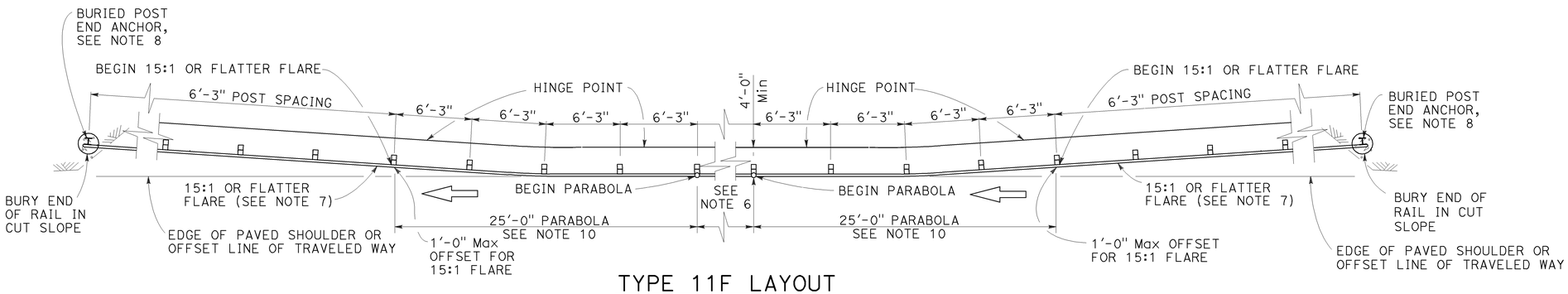

TYPE 11F LAYOUT

(Embankment MGS installation with a buried end anchor treatment at each end of railing)
See Notes 4 and 9

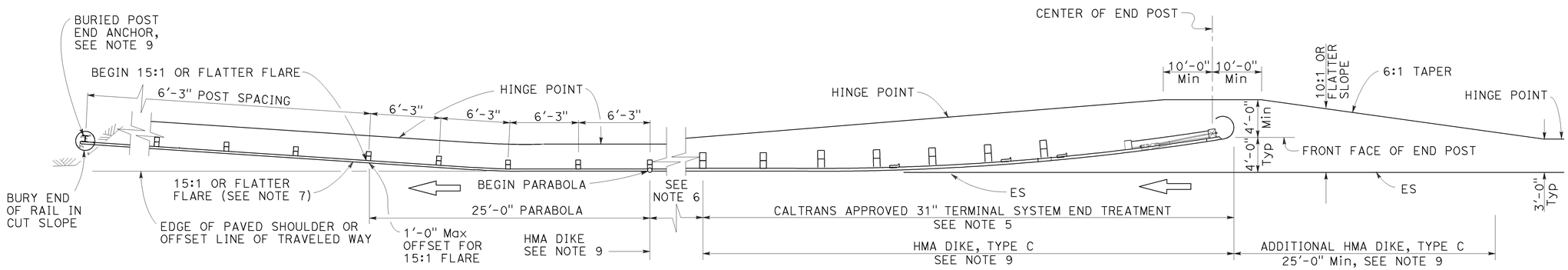

TYPE 11G LAYOUT

(Embankment MGS installation with 31" flared end treatment and a buried end anchor treatment at the ends of railing)
See Notes 4 and 9

NOTES:

1. Line post, blocks and hardware to be used are shown on Revised Standard Plans RSP A77L1, RSP A77L2, RSP A77M1, RSP A77N1 and RSP A77N2.
2. MGS post spacing to be 6'-3" center to center, except as otherwise noted.
3. Except as noted, line posts are 6" x 8" x 6'-0" wood with 6" x 12" x 1'-2" wood blocks. W6 x 8.5 or W6 x 9 steel posts, 6'-0" in length, with 6" x 12" x 1'-2" notched wood blocks or plastic blocks may be used for 6" x 8" x 6'-0" wood post with 6" x 12" x 1'-2" wood blocks where applicable and when specified.
4. Layout Types 11D through 11L, shown on the A77P Series of Standard Plans, are typically used where MGS is recommended to shield embankment slopes and a crashworthy 31" end treatment is required for both directions of traffic.
5. The type of 31" terminal system end treatment to be used will be shown on the Project Plans.
6. Dependent on site conditions (embankment height and side slope), construction of additional MGS (length equal to multiples of 12'-6" with 6'-3" post spacing) may be advisable.
7. The 15:1 or flatter flare used with buried end anchors is based on the edge of the paved shoulder or offset line of edge of the traveled way. The length of MGS within the 15:1 or flatter flare is based on site conditions and should be a length equal to multiples of 12'-6".
8. For details of the buried post end anchor used with Type 11F and 11G Layouts, see Revised Standard Plan RSP A77T2.
9. Where placement of dike is required with MGS installations, see Revised Standard Plan RSP A77N4 for dike positioning details.
10. For typical flare offsets for 25'-0" length parabola with maximum offset of 1'-0", see Revised Standard Plan RSP A77P1.

STATE OF CALIFORNIA
DEPARTMENT OF TRANSPORTATION

MIDWEST GUARDRAIL SYSTEM TYPICAL LAYOUTS FOR EMBANKMENTS

NO SCALE

RSP A77P3 DATED JULY 19, 2013 SUPPLEMENTS THE STANDARD PLANS BOOK DATED 2010.

REVISED STANDARD PLAN RSP A77P3

2010 REVISED STANDARD PLAN RSP A77P3

6-19-13

Dist	COUNTY	ROUTE	POST MILES TOTAL PROJECT	SHEET No.	TOTAL SHEETS
03	But,Col,Gln, Sut,Yol,Yub	16,32,45 70,113,162	Var	167	195

Randell D. Hiatt
REGISTERED CIVIL ENGINEER

July 19, 2013
PLANS APPROVAL DATE

REGISTERED PROFESSIONAL ENGINEER
Randell D. Hiatt
No. C50200
Exp. 6-30-15
CIVIL
STATE OF CALIFORNIA

THE STATE OF CALIFORNIA OR ITS OFFICERS OR AGENTS SHALL NOT BE RESPONSIBLE FOR THE ACCURACY OR COMPLETENESS OF SCANNED COPIES OF THIS PLAN SHEET.

TO ACCOMPANY PLANS DATED 2-10-14

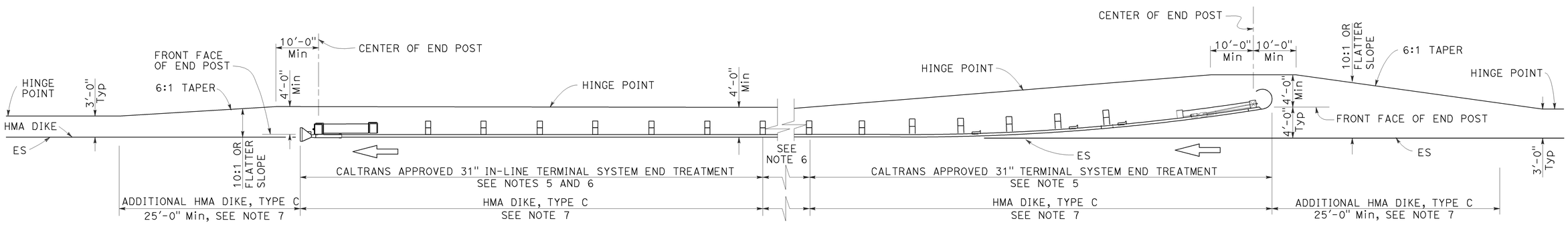

TYPE 11H LAYOUT

(Embankment MGS installation with 31" flared end treatment
and 31" in-line treatment at the ends of railing)
See Notes 4 and 7

NOTES:

1. Line post, blocks and hardware to be used are shown on Revised Standard Plans RSP A77L1, RSP A77L2, RSP A77M1, RSP A77N1 and RSP A77N2.
2. MGS post spacing to be 6'-3" center to center, except as otherwise noted.
3. Except as noted, line posts are 6" x 8" x 6'-0" wood with 6" x 12" x 1'-2" wood blocks. W6 x 8.5 or W6 x 9 steel posts, 6'-0" in length, with 6" x 12" x 1'-2" notched wood blocks or plastic blocks may be used for 6" x 8" x 6'-0" wood post with 6" x 12" x 1'-2" wood blocks where applicable and when specified.
4. Layout Types 11D through 11L, shown on the A77P Series of Standard Plans, are typically used where MGS is recommended to shield embankment slopes and a crashworthy 31" end treatment is required for both directions of traffic.
5. The type of 31" terminal system end treatment to be used will be shown on the Project Plans.
6. Dependent on site conditions (embankment height and side slope), construction of additional MGS (length equal to multiples of 12'-6" with 6'-3" post spacing) may be advisable.
7. Where placement of dike is required with MGS installations, see Revised Standard Plan RSP A77N4 for dike positioning details.

STATE OF CALIFORNIA
DEPARTMENT OF TRANSPORTATION

MIDWEST GUARDRAIL SYSTEM TYPICAL LAYOUTS FOR EMBANKMENTS

NO SCALE

RSP A77P4 DATED JULY 19, 2013 SUPPLEMENTS THE STANDARD PLANS BOOK DATED 2010.

REVISED STANDARD PLAN RSP A77P4

2010 REVISED STANDARD PLAN RSP A77P4

6-19-13

Dist	COUNTY	ROUTE	POST MILES TOTAL PROJECT	SHEET No.	TOTAL SHEETS
03	But,Col,Gln, Sut,Yol,Yub	16,32,45 70,113,162	Var	168	195

Randell D. Hiatt
REGISTERED CIVIL ENGINEER

July 19, 2013
PLANS APPROVAL DATE

REGISTERED PROFESSIONAL ENGINEER — Randell D. Hiatt, No. C50200, Exp. 6-30-15, CIVIL, STATE OF CALIFORNIA

THE STATE OF CALIFORNIA OR ITS OFFICERS OR AGENTS SHALL NOT BE RESPONSIBLE FOR THE ACCURACY OR COMPLETENESS OF SCANNED COPIES OF THIS PLAN SHEET.

TO ACCOMPANY PLANS DATED 2-10-14

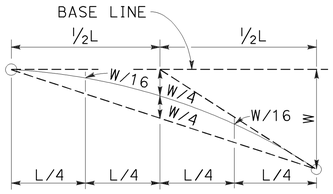

TYPICAL PARABOLIC LAYOUT

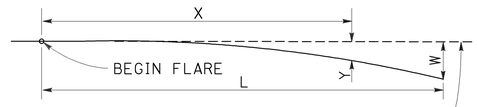

BASE LINE (EDGE OF PAVED SHOULDER OR OFFSET LINE OF EDGE OF TRAVELED WAY)

$$Y = \frac{WX^2}{L^2}$$

Y = OFFSET FROM BASE LINE
W = MAXIMUM OFFSET
X = DISTANCE ALONG BASE LINE
L = LENGTH OF FLARE

PARABOLIC FLARE OFFSETS

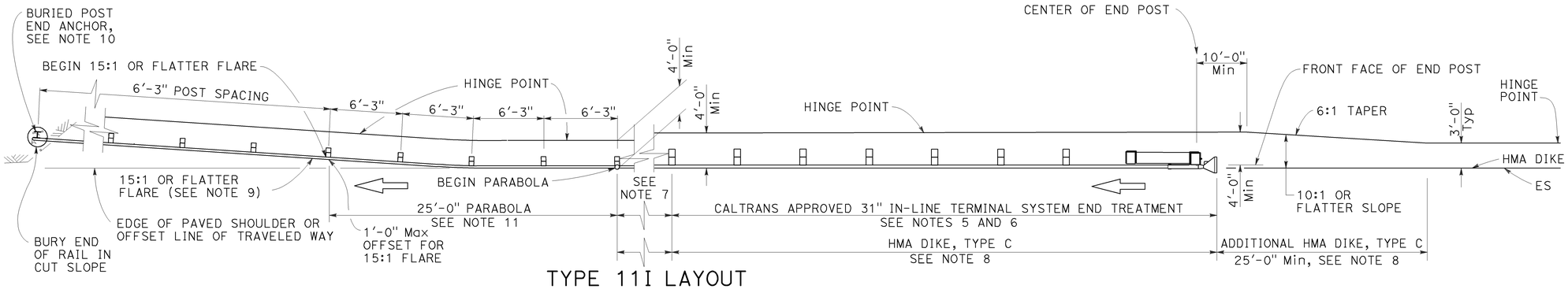

TYPE 11I LAYOUT

(Embankment MGS installation with 31" in-line end treatment and a buried end anchor treatment at the ends of railing)
See Note 4

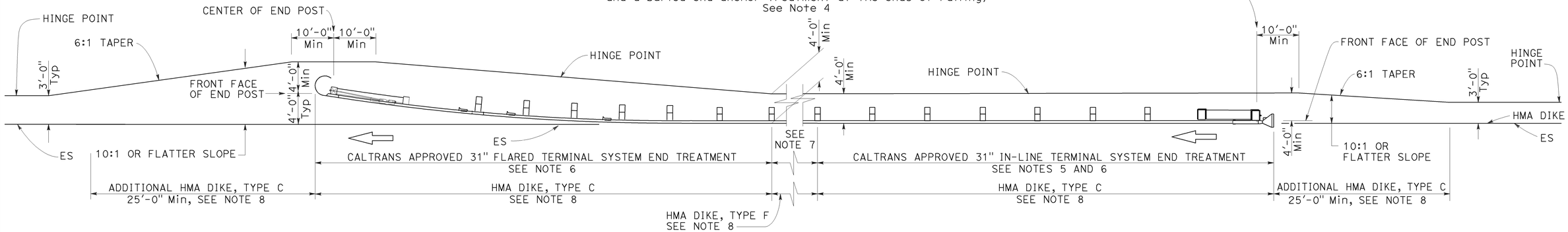

TYPE 11J LAYOUT

(Embankment MGS installation with 31" in-line end treatment and 31" flared end treatment at the ends of railing)
See Note 4

NOTES:

1. Line post, blocks and hardware to be used are shown on Revised Standard Plans RSP A77L1, RSP A77L2, RSP A77M1, RSP A77N1 and RSP A77N2.
2. MGS post spacing to be 6'-3" center to center, except as otherwise noted.
3. Except as noted, line posts are 6" x 8" x 6'-0" wood with 6" x 12" x 1'-2" wood blocks. W6 x 8.5 or W6 x 9 steel posts, 6'-0" in length, with 6" x 12" x 1'-2" notched wood blocks or plastic blocks may be used for 6" x 8" x 6'-0" wood post with 6" x 12" x 1'-2" wood blocks where applicable and when specified.
4. Layout Types 11D through 11L, shown on the A77P Series of Standard Plans, are typically used where MGS is recommended to shield embamkment slopes and a crashworthy 31" end treatment is required for both directions of traffic.
5. 31" in-line terminal system end treatments are used where site conditions will not accommodate a 31" flared end treatment.
6. The type of 31" terminal system end treatment to be used will be shown on the Project Plans.
7. Dependent on site conditions (embankment height and side slope), construction of additional MGS (length equal to multiples of 12'-6" with 6'-3" post spacing) may be advisable.
8. Where placement of dike is required with MGS installations, see Revised Standard Plan RSP A77N4 for dike positioning details.
9. The 15:1 or flatter flare used with buried end anchors is based on the edge of the paved shoulder or offset line of edge of the traveled way. The length of MGS within the 15:1 or flatter flare is based on site conditions and should be a length equal to multiples of 12'-6".
10. For details of the buried post end anchor used with Type 11I Layout, see Revised Standard Plan RSP A77T2.
11. For typical flare offsets for 25'-0" length parabola with maximum offset of 1'-0", see Revised Standard Plan RSP A77P1.

STATE OF CALIFORNIA
DEPARTMENT OF TRANSPORTATION

MIDWEST GUARDRAIL SYSTEM TYPICAL LAYOUTS FOR EMBANKMENTS

NO SCALE

RSP A77P5 DATED JULY 19, 2013 SUPPLEMENTS THE STANDARD PLANS BOOK DATED 2010.

REVISED STANDARD PLAN RSP A77P5

2010 REVISED STANDARD PLAN RSP A77P5

6-19-13

Dist	COUNTY	ROUTE	POST MILES TOTAL PROJECT	SHEET No.	TOTAL SHEETS
03	But,Col,Gln, Sut,Yol,Yub	16,32,45 70,113,162	Var	169	195

Randell D. Hiatt
REGISTERED CIVIL ENGINEER

July 19, 2013
PLANS APPROVAL DATE

REGISTERED PROFESSIONAL ENGINEER — Randell D. Hiatt No. C50200 Exp. 6-30-15 CIVIL — STATE OF CALIFORNIA

THE STATE OF CALIFORNIA OR ITS OFFICERS OR AGENTS SHALL NOT BE RESPONSIBLE FOR THE ACCURACY OR COMPLETENESS OF SCANNED COPIES OF THIS PLAN SHEET.

TO ACCOMPANY PLANS DATED 2-10-14

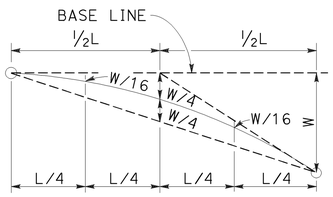

TYPICAL PARABOLIC LAYOUT

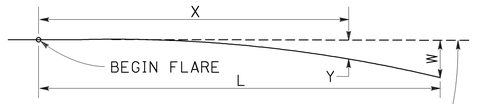

BASE LINE (EDGE OF PAVED SHOULDER OR OFFSET LINE OF EDGE OF TRAVELED WAY)

$$Y = \frac{WX^2}{L^2}$$

Y = OFFSET FROM BASE LINE
W = MAXIMUM OFFSET
X = DISTANCE ALONG BASE LINE
L = LENGTH OF FLARE

PARABOLIC FLARE OFFSETS

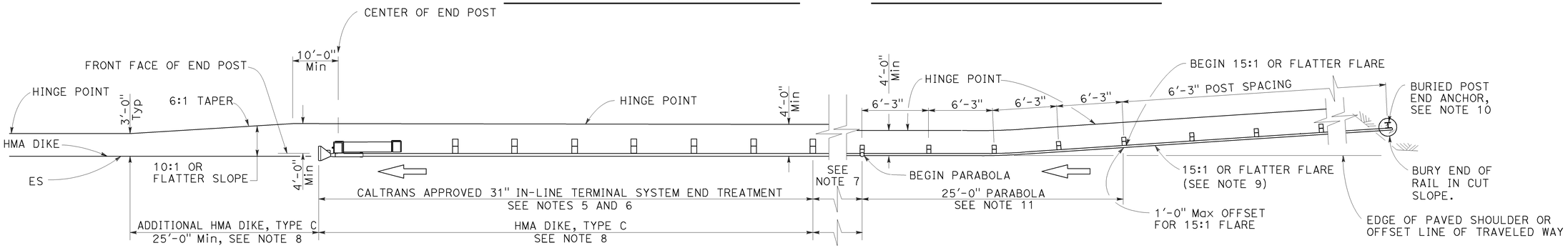

TYPE 11K LAYOUT

(Embankment MGS installation with a buried end anchor treatment and a 31" in-line end treatment at the ends of railing)
See Note 4

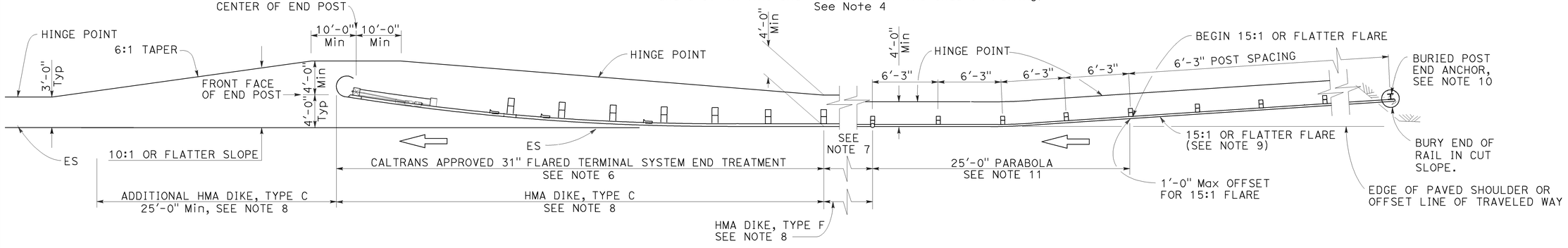

TYPE 11L LAYOUT

(Embankment MGS installation with a buried end anchor treatment and a 31" flared end treatment at the ends of railing)
See Note 4

NOTES:

1. Line post, blocks and hardware to be used are shown on Revised Standard Plans RSP A77L1, RSP A77L2, RSP A77M1, RSP A77N1 and RSP A77N2.
2. MGS post spacing to be 6'-3" center to center, except as otherwise noted.
3. Except as noted, line posts are 6" x 8" x 6'-0" wood with 6" x 12" x 1'-2" wood blocks. W6 x 8.5 or W6 x 9 steel posts, 6'-0" in length, with 6" x 12" x 1'-2" notched wood blocks or plastic blocks may be used for 6" x 8" x 6'-0" wood post with 6" x 12" x 1'-2" wood blocks where applicable and when specified.
4. Layout Types 11D through 11L, shown on the A77P Series of Standard Plans, are typically used where MGS is recommended to shield embamkment slopes and a crashworthy 31" end treatment is required for both directions of traffic.
5. 31" in-line terminal system end treatments are used where site conditions will not accommodate a 31" flared end treatment.
6. The type of 31" terminal system end treatment to be used will be shown on the Project Plans.
7. Dependent on site conditions (embankment height and side slope), construction of additional MGS (length equal to multiples of 12'-6" with 6'-3" post spacing) may be advisable.
8. Where placement of dike is required with MGS installations, see Revised Standard Plan RSP A77N4 for dike positioning details.
9. The 15:1 or flatter flare used with buried end anchors is based on the edge of the paved shoulder or offset line of edge of the traveled way. The length of MGS within the 15:1 or flatter flare is based on site conditions and should be a length equal to multiples of 12'-6".
10. For details of the buried post end anchor used with Type 11K and 11L Layouts, see Revised Standard Plan RSP A77T2.
11. For typical flare offsets for 25'-0" length parabola with maximum offset of 1'-0", see Revised Standard Plan RSP A77P1.

STATE OF CALIFORNIA
DEPARTMENT OF TRANSPORTATION

MIDWEST GUARDRAIL SYSTEM TYPICAL LAYOUTS FOR EMBANKMENTS

NO SCALE

RSP A77P6 DATED JULY 19, 2013 SUPPLEMENTS THE STANDARD PLANS BOOK DATED 2010.

REVISED STANDARD PLAN RSP A77P6

2010 REVISED STANDARD PLAN RSP A77P6

6-19-13

Dist	COUNTY	ROUTE	POST MILES TOTAL PROJECT	SHEET No.	TOTAL SHEETS
03	But,Col,Gln, Sut,Yol,Yub	16,32,45 70,113,162	Var	170	195

Randell D. Hiatt
REGISTERED CIVIL ENGINEER

July 19, 2013
PLANS APPROVAL DATE

REGISTERED PROFESSIONAL ENGINEER
Randell D. Hiatt
No. C50200
Exp. 6-30-15
CIVIL
STATE OF CALIFORNIA

THE STATE OF CALIFORNIA OR ITS OFFICERS OR AGENTS SHALL NOT BE RESPONSIBLE FOR THE ACCURACY OR COMPLETENESS OF SCANNED COPIES OF THIS PLAN SHEET.

TO ACCOMPANY PLANS DATED 2-10-14

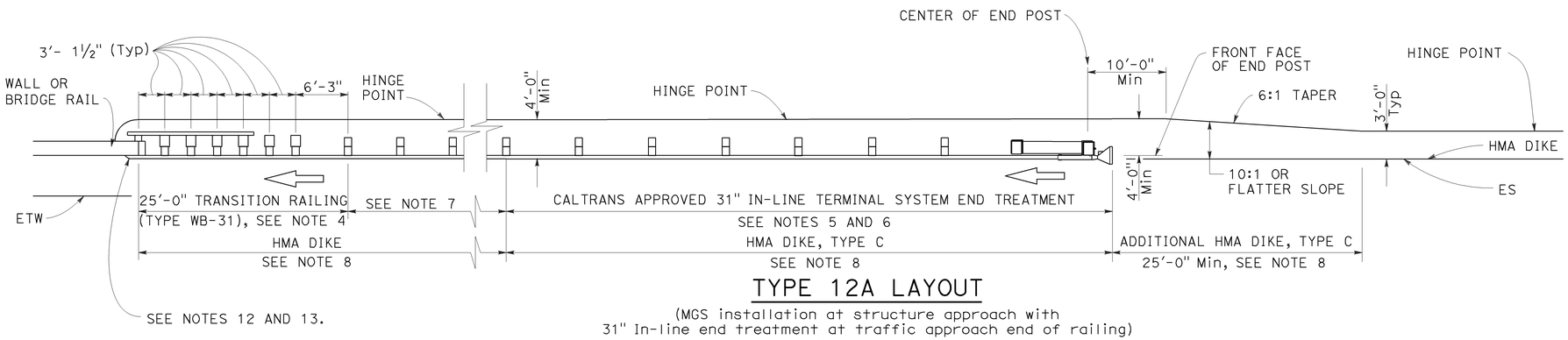

TYPE 12A LAYOUT

(MGS installation at structure approach with
31" In-line end treatment at traffic approach end of railing)
See Notes 9

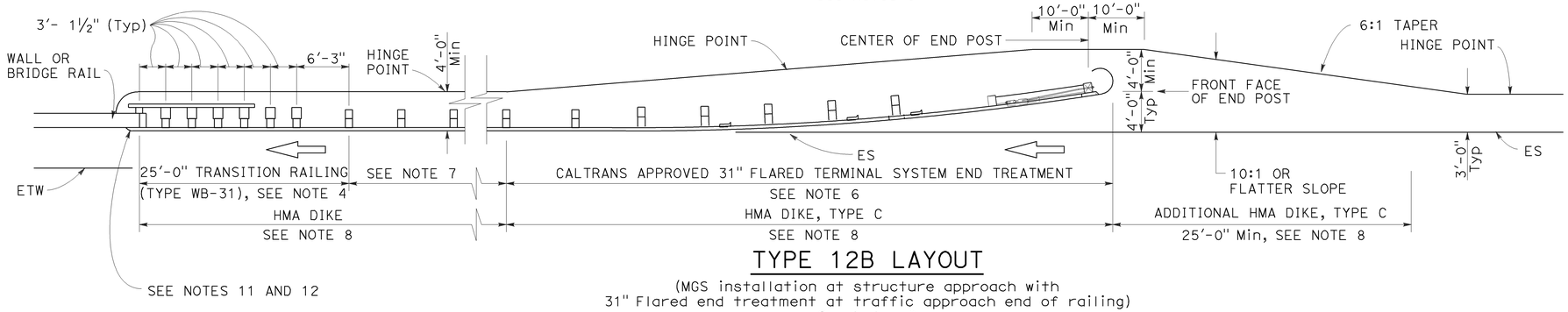

TYPE 12B LAYOUT

(MGS installation at structure approach with
31" Flared end treatment at traffic approach end of railing)
See Notes 9

NOTES:

1. Line post, blocks and hardware to be used are shown on Revised Standard Plans RSP A77L1, RSP A77L2, RSP A77M1, RSP A77N1 and RSP A77N2.
2. MGS post spacing to be 6'-3" center to center, except as otherwise noted.
3. Except as noted, line posts are 6" x 8" x 6'-0" wood with 6" x 12" x 1'-2" wood blocks. W6 x 8.5 or W6 x 9 steel posts, 6'-0" in length, with 6" x 12" x 1'-2" notched wood blocks or plastic blocks may be used for 6" x 8" x 6'-0" wood posts with 6" x 12" x 1'-2" wood blocks where applicable and when specified.
4. For Transition Railing (Type WB-31) details for Types 12A and 12B Layouts, see Revised Standard Plan RSP A77U4.
5. 31" in-line terminal system end treatments are used where site conditions will not accommodate a 31" flared end treatment.
6. The type 31" of terminal system end treatment to be used will be shown on the Project Plans.
7. Dependent on site conditions (embankment height, side slopes, or other fixed objects), it may be advisable to construct additional guard railing (a length equal to multiples of 12'-6" with 6'-3" post spacing) between the transition railing and end treatment. A 12.5 degree angle of departure can be drawn on the Project Plans from the edge of traveled way through the outer most point of the fixed object to determine the additional length of railing needed.
8. Where placement of dike is required with guard railing installations, see Revised Standard Plan RSP A77N4 for dike positioning details.
9. Type 12A or Type 12B Layouts are typically used:
   a. To the right of approaching traffic, at the end of a structure, on two-lane conventional highway where the roadbed width across the structure is less than 40 feet.
   b. To the left of approaching traffic, at the end of a structure, on two-lane conventional highway where the roadbed width across the structure is less than 40 feet.
   c. To the right of approaching traffic at the end of each structure on multilane freeways or expressways with separate adjacent or parallel bridges.
   d. To the right of approaching traffic at the end of the structure on multilane freeways or expressways with decked median on the bridge.
10. See Revised Standard Plan RSP A77Q3 for typical layout used left of approaching traffic at the ends of each structure on multilane freeways or expressways with separate adjacent or parallel bridges.
11. For additional details of typical connections to bridge rail, see Connection Detail AA on Revised Standard Plans RSP A77U1 and RSP A77U2 and Connection Detail FF on Revised Standard Plans RSP A77V1 and RSP A77V2.
12. For additional details of a typical connection to walls or abutments, see Revised Standard Plan RSP A77U3.

STATE OF CALIFORNIA
DEPARTMENT OF TRANSPORTATION

MIDWEST GUARDRAIL SYSTEM TYPICAL LAYOUTS FOR STRUCTURE APPROACH

NO SCALE

RSP A77Q1 DATED JULY 19, 2013 SUPPLEMENTS THE STANDARD PLANS BOOK DATED 2010.

REVISED STANDARD PLAN RSP A77Q1

2010 REVISED STANDARD PLAN RSP A77Q1

6-19-13

Dist	COUNTY	ROUTE	POST MILES TOTAL PROJECT	SHEET No.	TOTAL SHEETS
03	But,Col,Gln, Sut,Yol,Yub	16,32,45 70,113,162	Var	171	195

Randell D. Hiatt
REGISTERED CIVIL ENGINEER

REGISTERED PROFESSIONAL ENGINEER — Randell D. Hiatt, No. C50200, Exp. 6-30-15, CIVIL, STATE OF CALIFORNIA

July 19, 2013
PLANS APPROVAL DATE

THE STATE OF CALIFORNIA OR ITS OFFICERS OR AGENTS SHALL NOT BE RESPONSIBLE FOR THE ACCURACY OR COMPLETENESS OF SCANNED COPIES OF THIS PLAN SHEET.

TO ACCOMPANY PLANS DATED 2-10-14

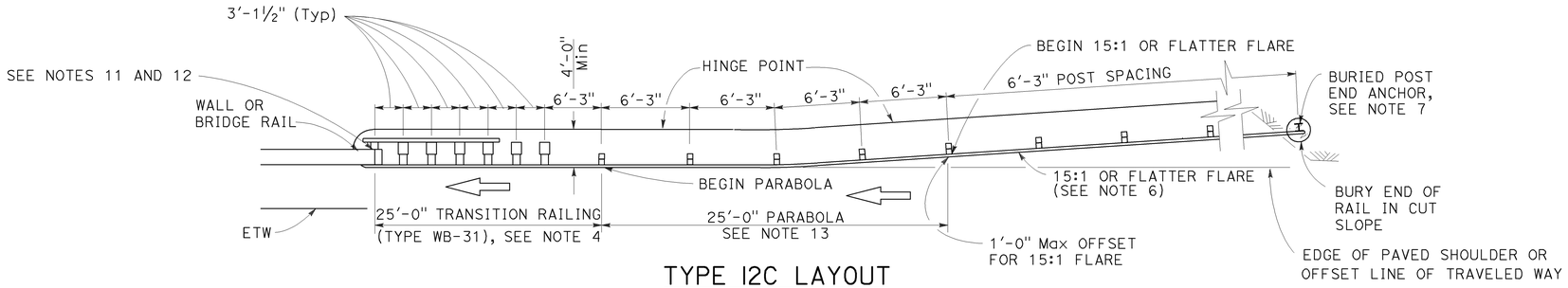

TYPE 12C LAYOUT

(MGS installation at structure approach with a Buried end anchor treatment at traffic approach end of railing)
See Notes 8 and 9

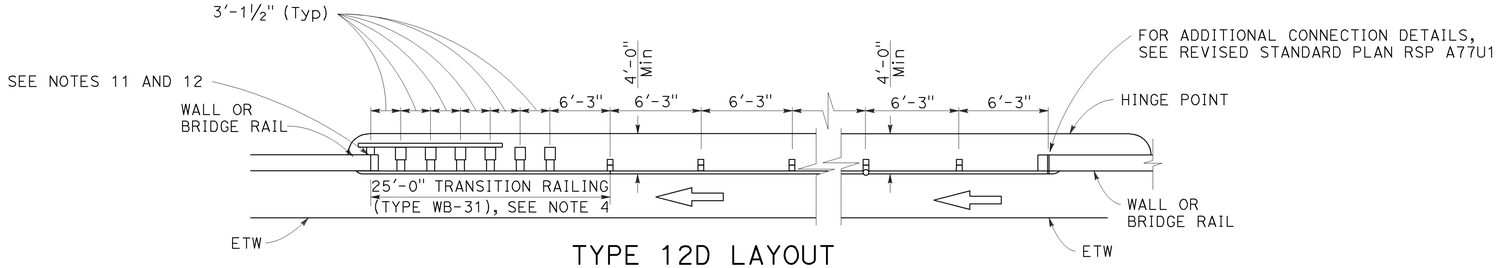

TYPE 12D LAYOUT

(Continuous MGS installation between structures)
See Notes 5 and 9

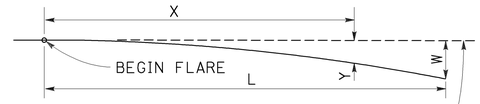

$$Y = \frac{WX^2}{L^2}$$

Y = OFFSET FROM BASE LINE
W = MAXIMUM OFFSET
X = DISTANCE ALONG BASE LINE
L = LENGTH OF FLARE

PARABOLIC FLARE OFFSETS

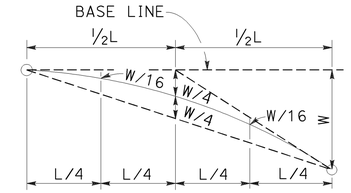

TYPICAL PARABOLIC LAYOUT

NOTES:

1. Line post, blocks and hardware to be used are shown on Revised Standard Plans RSP A77L1, RSP A77L2, RSP A77M1, RSP A77N1 and RSP A77N2.
2. MGS post spacing to be 6'-3" center to center, except as otherwise noted.
3. Except as noted, line posts are 6" x 8" x 6'-0" m wood with 6" x 12" x 1'-2" wood blocks. W6 x 8.5 or W6 x 9 steel posts, 6'-0" in length, with 6" x 12" x 1'-2" notched wood blocks or plastic blocks may be used for 6" x 8" x 6'-0" wood posts with 6" x 12" x 1'-2" wood blocks where applicable and when specified.
4. For Transition Railing (Type WB-31) details for Types 12C and 12D Layouts, see Revised Standard Plan RSP A77U4.
5. Type 12D layout is typically used where continous MGS is recommended between structures.
6. The 15:1 or flatter flare for Type 12C Layout is based on the edge of the paved shoulder or offset line of edge of the traveled way. The length of MGS with the 15:1 or flatter flare is based on site conditions and should be a length equal to multiples of 12'-6".
7. For details of the buried post end anchor used with Type 12C Layout, see Revised Standard Plan RSP A77T2.
8. Where placement of dike is required with MGS installations, see Revised Standard Plan RSP A77N4 for dike positioning details.
9. Type 12C Layout is typically used:
   a. To the right of approaching traffic, at the end of the structure, on two-lane conventional highway where the roadbed width across the structure is less than 40 feet.
   b. To the left of approaching traffic, at each of a structure, on two-lane conventional highway where the roadbed width across the structure is less than 40 feet.
   c. To the right of approaching traffic at the end of each structure on multilane freeways or expressways with separate adjacent or parallel bridges.
   d. To the right of approaching traffic at the end of the structure on multilane freeways or expressways with decked median on the bridge.
10. See Revised Standard Plan RSP A77Q3 for typical layout used left of approaching traffic at the ends of each structure on multilane freeways or expressways with separate adjacent or parallel bridges.
11. For additional details of typical connections to bridge rail, see Connection Detail AA on Revised Standard Plans RSP A77U1 and RSP A77U2 and Connection Detail FF on Revised Standard Plans RSP A77V1 and RSP A77V2.
12. For additional details of a typical connection to walls or abutments, see Revised Standard Plan RSP A77U3.
13. For typical flare offsets for 25'-0" length parabola with maximum offset of 1'-0", see Revised Standard Plan RSP A77P1.

STATE OF CALIFORNIA
DEPARTMENT OF TRANSPORTATION

MIDWEST GUARDRAIL SYSTEM TYPICAL LAYOUTS FOR STRUCTURE APPROACH AND BETWEEN STRUCTURES

NO SCALE

RSP A77Q2 DATED JULY 19, 2013 SUPPLEMENTS THE STANDARD PLANS BOOK DATED 2010.

REVISED STANDARD PLAN RSP A77Q2

2010 REVISED STANDARD PLAN RSP A77Q2

7-8-13

Dist	COUNTY	ROUTE	POST MILES TOTAL PROJECT	SHEET No.	TOTAL SHEETS
03	But,Col,Gln, Sut,Yol,Yub	16,32,45 70,113,162	Var	172	195

Randell D. Hiatt
REGISTERED CIVIL ENGINEER

July 19, 2013
PLANS APPROVAL DATE

REGISTERED PROFESSIONAL ENGINEER — Randell D. Hiatt No. C50200 Exp. 6-30-15 CIVIL — STATE OF CALIFORNIA

THE STATE OF CALIFORNIA OR ITS OFFICERS OR AGENTS SHALL NOT BE RESPONSIBLE FOR THE ACCURACY OR COMPLETENESS OF SCANNED COPIES OF THIS PLAN SHEET.

TO ACCOMPANY PLANS DATED 2-10-14

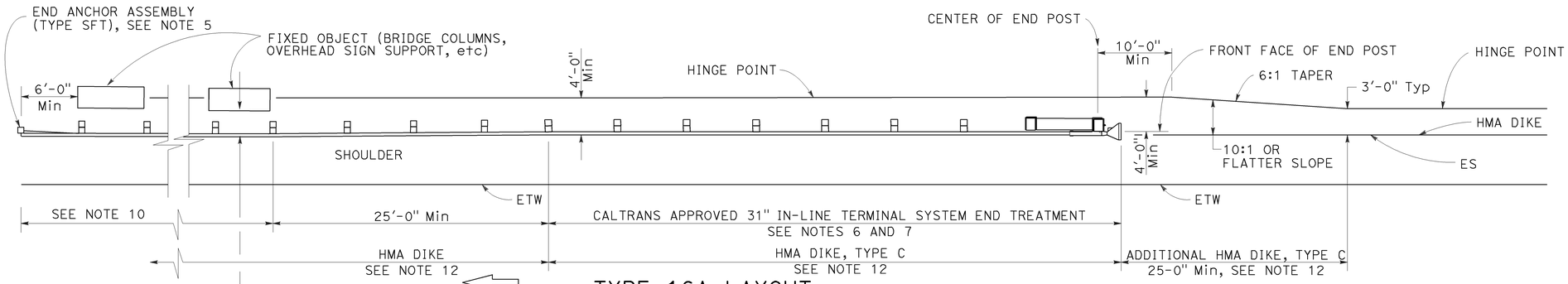

TYPE 16A LAYOUT

(MGS installation at roadside fixed object or objects with 31" in-line end treatment at traffic approach end of railing)
See Notes 11 and 12

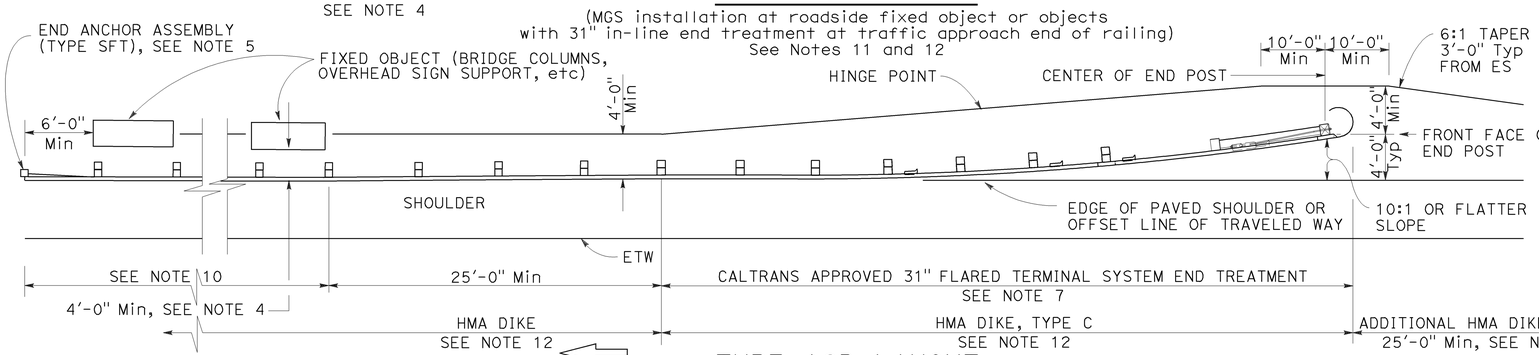

TYPE 16B LAYOUT

(MGS installation at roadside fixed object or objects with 31' flared end treatment at traffic approach end of railing)
See Notes 11 and 12

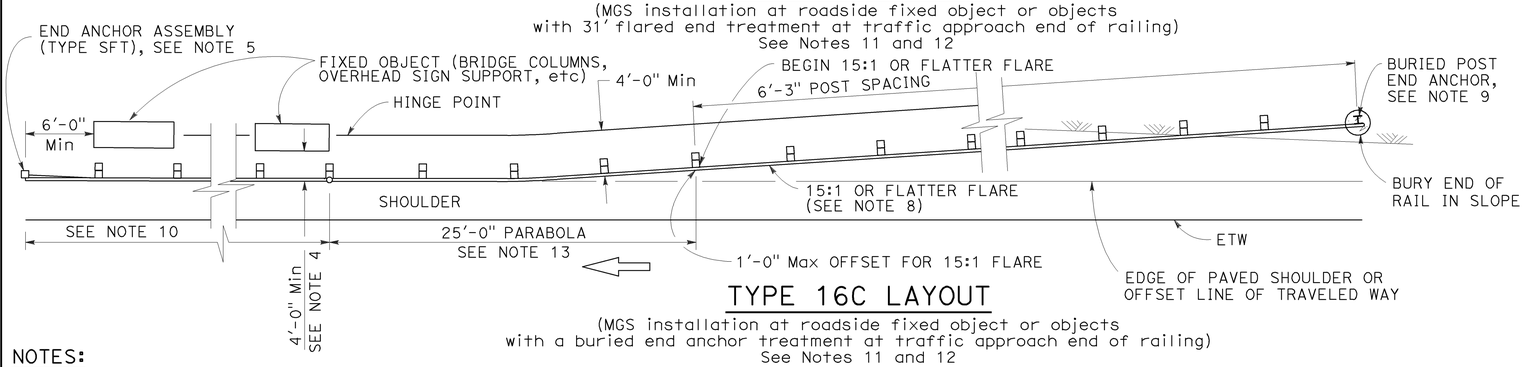

TYPE 16C LAYOUT

(MGS installation at roadside fixed object or objects with a buried end anchor treatment at traffic approach end of railing)
See Notes 11 and 12

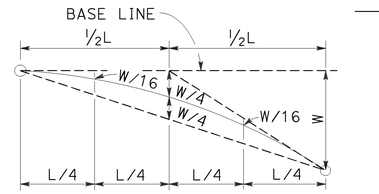

TYPICAL PARABOLIC LAYOUT

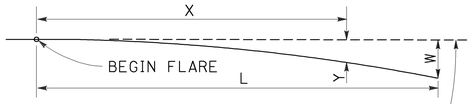

BASE LINE (EDGE OF PAVED SHOULDER OR OFFSET LINE OF EDGE OF TRAVELED WAY)

$$Y = \frac{WX^2}{L^2}$$

Y = OFFSET FROM BASE LINE
W = MAXIMUM OFFSET
X = DISTANCE ALONG BASE LINE
L = LENGTH OF FLARE

PARABOLIC FLARE OFFSETS

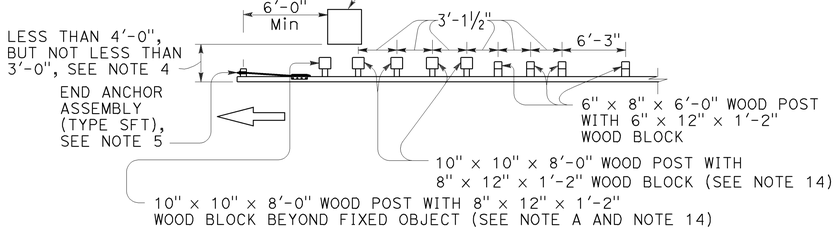

NOTE A: For a series of fixed objects (bridge columns, overhead sign supports, etc.) additional 10" x 10" x 8'-0" wood post with 8" x 12" x 1'-2" wood blocks at 3'-1½" center to center spacing are to be used between fixed objects.

STRENGTHENED MIDWEST GUARDRAIL SYSTEM SECTIONS FOR FIXED OBJECT

Use strengthened MGS sections with Types 16A, 16B or 16C layouts where minimum clearance between the face of the railing and fixed object(s) is less than 4'-0", but not less than 3'-0". See Note 4

NOTES:

1. Line post, blocks and hardware to be used are shown on Revised Standard Plans RSP A77L1, RSP A77L2, RSP A77M1, RSP A77N1 and RSP A77N2.
2. MGS post spacing to be 6'-3" center to center, except as otherwise noted.
3. Except as noted, line posts are 6" x 8" x 6'-0" wood with 6" x 12" x 1'-2" wood blocks. W6 x 8.5 or W6 x 9 steel posts, 6'-0" in length, with 6" x 12" x 1'-2" notched wood blocks or notched recycled plastic blocks may be used for 6" x 8" x 6'-0" wood line posts with 6" x 12" x 1'-2" wood blocks where applicable and when specified.
4. A 4'-0" minimum clearance is required between the face of the railing and the face of a fixed object located directly behind MGS sections with post spacing of 6'-3". Construct MGS as shown in the detail "Strengthened Midwest Guardrail System Sections for Fixed Object" on this plan, where the clearance between the face of the railing and the face of a fixed object is less than 4'-0", but not less than 3'-0". Where the clearance is less than 3'-0", a concrete wall or barrier should be constructed to shield the fixed object(s).
5. For End Anchor Assembly (Type SFT) details, see Revised Standard Plan RSP A77S1.
6. 31" in-line terminal system end treatments are used where site conditions will not accommodate a 31" flared end treatment.
7. The type of 31" terminal system to be used will be shown on the Project Plans.
8. The 15:1 or flatter flare used with Type 16C Layout is based on the edge of the paved shoulder or offset line of edge of the traveled way. The length of MGS within the 15:1 or flatter flare is based on site conditions and should be a length equal to multiples of 12'-6".
9. For details of the Buried Post End Anchor used with Type 16C Layout, see Revised Standard Plan RSP A77T2.
10. As site conditions dictate, construct additional MGS to shield fixed object(s). Additional MGS length equal to multiples of 12'-6". Post spacing at 6'-3" except as specified in Note 4.
11. Layout Types 16A, 16B or 16C are typically used where MGS is recommended to shield roadside fixed object(s) and a crashworthy 31" end treatment is required for only one direction of traffic.
12. Where placement of dike is required with MGS, see Revised Standard Plan RSP A77N4 for dike positioning details.
13. For typical flare offsets for 25'-0" length parabola with maximum offset of 1'-0", see Revised Standard Plan RSP A77P1.
14. W6 x 15 steel post, 8'-0" in length, with 8" x 12" x 1'-2" notched wood block or notched recycled plastic blocks may be used in place of the 10" x 10" x 8'-0" wood post with 8" x 12" x 1'-2" wood block shown in the detail "Strengthened Midwest Guardrail System Sections for Fixed Object".

STATE OF CALIFORNIA
DEPARTMENT OF TRANSPORTATION

MIDWEST GUARDRAIL SYSTEM TYPICAL LAYOUTS FOR ROADSIDE FIXED OBJECTS

NO SCALE

RSP A77R3 DATED JULY 19, 2013 SUPPLEMENTS THE STANDARD PLANS BOOK DATED 2010.

REVISED STANDARD PLAN RSP A77R3

2010 REVISED STANDARD PLAN RSP A77R3

6-20-13

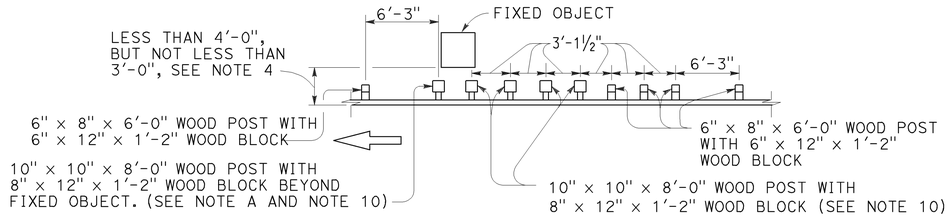

NOTE A: For a series of fixed objects (bridge columns, overhead sign supports, etc.) additional 10" x 10" x 8'-0" wood post with 8" x 12" x 1'-2" wood blocks at 3'-1½" center to center spacing are to be used between fixed object(s).

Dist	COUNTY	ROUTE	POST MILES TOTAL PROJECT	SHEET No.	TOTAL SHEETS
03	But,Col,Gln, Sut,Yol,Yub	16,32,45 70,113,162	Var	173	195

Randell D. Hiatt
REGISTERED CIVIL ENGINEER

July 19, 2013
PLANS APPROVAL DATE

REGISTERED PROFESSIONAL ENGINEER — Randell D. Hiatt No. C50200 Exp. 6-30-15 CIVIL — STATE OF CALIFORNIA

THE STATE OF CALIFORNIA OR ITS OFFICERS OR AGENTS SHALL NOT BE RESPONSIBLE FOR THE ACCURACY OR COMPLETENESS OF SCANNED COPIES OF THIS PLAN SHEET.

TO ACCOMPANY PLANS DATED 2-10-14

STRENGTHENED MIDWEST GUARDRAIL SYSTEM SECTIONS FOR FIXED OBJECT

Use strengthened MGS sections with layout Types 16D or 16E where minimum clearance between the face of the MGS and fixed object(s) is less than 4'-0", but not less than 3'-0". See Note 4.

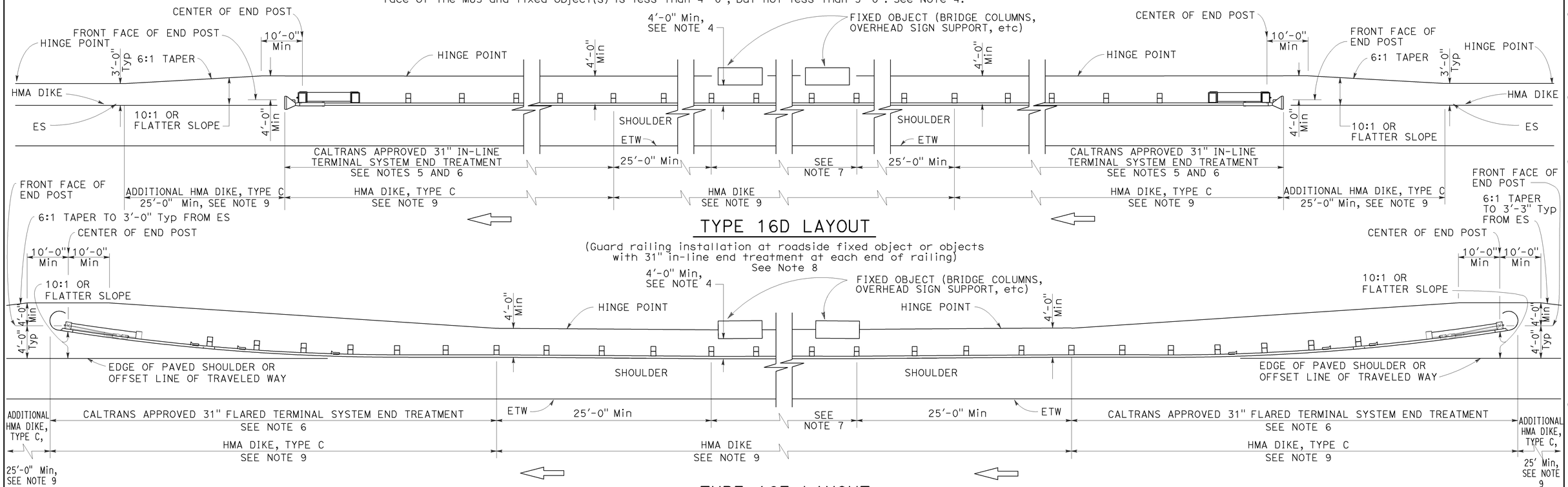

TYPE 16D LAYOUT

(Guard railing installation at roadside fixed object or objects with 31" in-line end treatment at each end of railing) See Note 8

TYPE 16E LAYOUT

(MGS installation at roadside fixed object or objects with 31" flared end treatment at each end of railing) See Note 8

NOTES:

1. Line post, blocks and hardware to be used are shown on Revised Standard Plans RSP A77L1, RSP A77L2, RSP A77M1, RSP A77N1 and RSP A77N2.
2. MGS post spacing to be 6'-3" center to center, except as otherwise noted.
3. Except as noted, line posts are 6" x 8" x 6'-0" wood with 6" x 12" x 1'-2" wood blocks. W6 x 8.5 or W6 x 9 steel posts, 6'-0" in length, with 6" x 12" x 1'-2" notched wood blocks or notched recycled plastic blocks may be used for 6" x 8" x 6'-0" wood line posts with 6" x 12" x 1'-2" wood blocks where applicable and when specified.
4. A 4'-0" minimum clearance is required between the face of the railing and the face of a fixed object located directly behind MGS sections with post spacing at 6'-3". Construct MGS as shown in the detail "Strengthened Midwest Guardrail System Sections for Fixed Object". on this plan, where the clearance between the face of the railing and the face of a fixed object is less than 4'-0", but not less than 3'-0". Where the clearance is less than 3'-0", a concrete wall or barrier should be constructed to shield the fixed object(s).
5. 31" in-line terminal system end treatments are used where site conditions will not accommodate a 31" flared end treatment.
6. The type of 31" terminal system to be used will be shown on the Project Plans.
7. As site conditions dictate, construct additional MGS to shield fixed object(s). Additional MGS length equal to multiples of 12'-6". Post spacing at 6'-3", except as specified in Note 4.
8. Layout Types 16D through 16L, shown on the A77R Series of Standard Plans, are typically used where MGS is recommended to shield roadside fixed object(s) and a crashworthy 31" end treatment is required for both directions of traffic.
9. Where placement of dike is required with MGS, see Revised Standard Plan RSP A77N4 for dike positioning details.
10. W6 x 15 steel post, 8'-0" in length, with 8" x 12" x 1'-2" notched wood block or notched recycled plastic block may be used in place of the 10" x 10" x 8'-0" wood post with 8" x 12" x 1'-2" wood block shown in the detail "Strengthened Midwest Guardrail System Sections for Fixed Object".

STATE OF CALIFORNIA
DEPARTMENT OF TRANSPORTATION

MIDWEST GUARDRAIL SYSTEM TYPICAL LAYOUTS FOR ROADSIDE FIXED OBJECTS

NO SCALE

RSP A77R4 DATED JULY 19, 2013 SUPPLEMENTS THE STANDARD PLANS BOOK DATED 2010.

REVISED STANDARD PLAN RSP A77R4

2010 REVISED STANDARD PLAN RSP A77R4

6-12-13

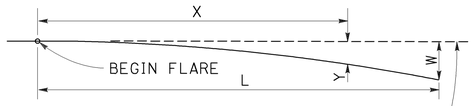

BASE LINE (EDGE OF PAVED SHOULDER OR OFFSET LINE OF EDGE OF TRAVELED WAY)

$Y = \frac{WX^2}{L^2}$

Y = OFFSET FROM BASE LINE
W = MAXIMUM OFFSET
X = DISTANCE ALONG BASE LINE
L = LENGTH OF FLARE

PARABOLIC FLARE OFFSETS

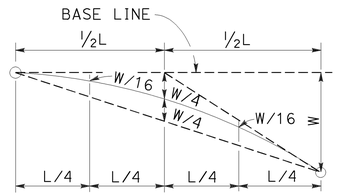

TYPICAL PARABOLIC LAYOUT

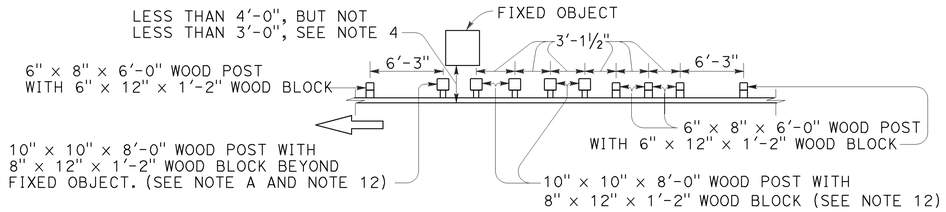

NOTE A: For a series of fixed objects (bridge columns, overhead sign supports, etc) additional 10" x 10" x 8'-0" wood post with 8" x 12" x 1'-2" wood blocks at 3'-1½" center to center spacing are to be used between fixed object(s).

Dist	COUNTY	ROUTE	POST MILES TOTAL PROJECT	SHEET No.	TOTAL SHEETS
03	But,Col,Gln, Sut,Yol,Yub	16,32,45 70,113,162	Var	174	195

Randell D. Hiatt
REGISTERED CIVIL ENGINEER

July 19, 2013
PLANS APPROVAL DATE

REGISTERED PROFESSIONAL ENGINEER — Randell D. Hiatt — No. C50200 — Exp. 6-30-15 — CIVIL — STATE OF CALIFORNIA

THE STATE OF CALIFORNIA OR ITS OFFICERS OR AGENTS SHALL NOT BE RESPONSIBLE FOR THE ACCURACY OR COMPLETENESS OF SCANNED COPIES OF THIS PLAN SHEET.

TO ACCOMPANY PLANS DATED 2-10-14

STRENGTHENED MIDWEST GUARDRAIL SYSTEM SECTIONS FOR FIXED OBJECT

Use strengthened MGS sections with layout Types 16F or 16G where minimum clearance between the face of the MGS and fixed object(s) is less than 4'-0", but not less than 3'-0". See Note 4.

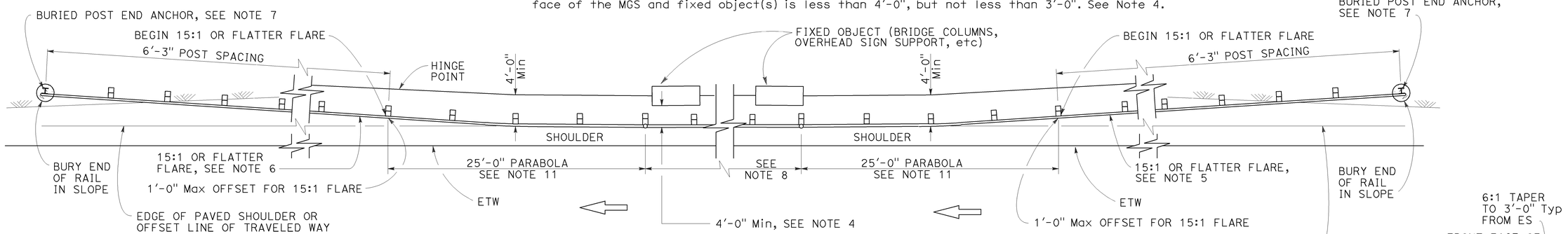

TYPE 16F LAYOUT

(MGS installation at roadside fixed object or objects
With a buried end anchor treatment at each end of railing)
See Notes 9 and 10

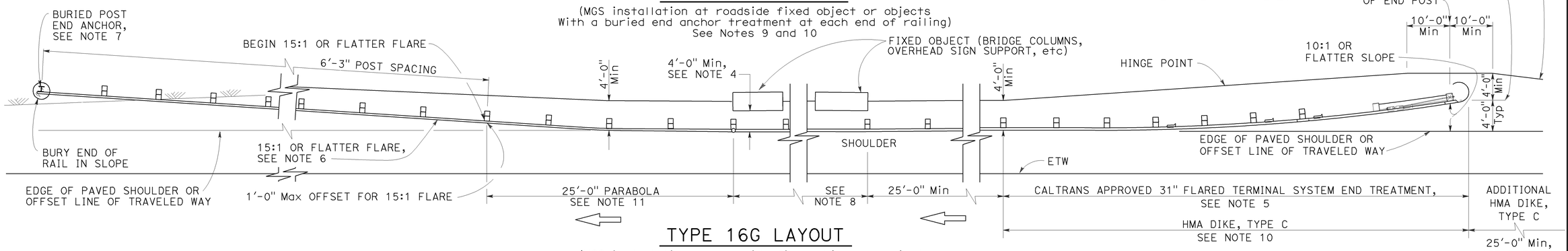

TYPE 16G LAYOUT

(MGS installation at roadside fixed object or objects
with 31" flared end treatment and a buried end anchor treatment at the ends of railing)
See Notes 9 and 10

NOTES:

1. Line post, blocks and hardware to be used are shown on Revised Standard Plans RSP A77L1, RSP A77L2, RSP A77M1, RSP A77N1 and RSP A77N2.
2. MGS post spacing to be 6'-3" center to center, except as otherwise noted.
3. Except as noted, line posts are 6" x 8" x 6'-0" wood with 6" x 12" x 1'-2" wood blocks. W6 x 8.5 or W6 x 9 steel posts, 6'-0" in length, with 8" x 12" x 1'-2" notched wood blocks or notched recycled plastic blocks may be used for 6" x 8" x 6'-0" wood posts with 6" x 12" x 1'-2" wood blocks where applicable and when specified.
4. A 4'-0" minimum clearance is required between the face of the railing and the face of a fixed object located directly behind MGS sections with post spacing at 6'-3". Construct MGS as shown in the detail "Strengthened Midwest Guardrail System Sections for Fixed Objects" on this plan, where the clearance between the face of the railing and the face of a fixed object is less than 4'-0", but not less than 3'-0". Where the clearance is less than 3'-0", a concrete wall or barrier should be constructed to shield the fixed object(s).
5. The type of 31" terminal system to be used will be shown on the Project Plans.
6. The 15:1 or flatter flare for the buried post anchor is based on the edge of the paved shoulder or offset line of edge of the traveled way. The length of MGS within the 15:1 or flatter flare is based on site conditions and should be a length equal to multiples of 12'-6".
7. For details of the Buried Post End Anchor, see Revised Standard Plan RSP A77T2.
8. As site conditions dictate, construct additional MGS to shield fixed object(s). Additional MGS length equal to multiples of 12'-6". Post spacing at 6'-3", except as specified in Note 4.
9. Layout Types 16D through 16L, shown on the A77R Series of Standard Plans, are typically used on highways where MGS is recommended to shield roadside fixed object(s) and a crashworthy 31" end treatment is required for both directions of traffic.
10. Where placement of dike is required with MGS, see Revised Standard Plan RSP A77N4 for dike positioning details.
11. For typical flare offsets for 25'-0" length parabola with maximum offset of 1'-0", see Revised Standard Plan RSP A77P1.
12. W6 x 15 steel post, 8'-0" in length, with 8" x 12" x 1'-2" notched wood block or notched recycled plastic blocks may be used in place of the 10" x 10" x 8'-0" wood post with 8" x 12" x 1'-2" wood block shown in the detail "Strengthened Midwest Guardrail System Sections for Fixed Object".

STATE OF CALIFORNIA
DEPARTMENT OF TRANSPORTATION

MIDWEST GUARDRAIL SYSTEM TYPICAL LAYOUTS FOR ROADSIDE FIXED OBJECTS

NO SCALE

RSP A77R5 DATED JULY 19, 2013 SUPPLEMENTS THE STANDARD PLANS BOOK DATED 2010.

REVISED STANDARD PLAN RSP A77R5

2010 REVISED STANDARD PLAN RSP A77R5

6-12-13

Dist	COUNTY	ROUTE	POST MILES TOTAL PROJECT	SHEET No.	TOTAL SHEETS
03	But,Col,Gln, Sut,Yol,Yub	16,32,45 70,113,162	Var	175	195

Randell D. Hiatt
REGISTERED CIVIL ENGINEER

July 19, 2013
PLANS APPROVAL DATE

REGISTERED PROFESSIONAL ENGINEER — Randell D. Hiatt No. C50200 Exp. 6-30-15 CIVIL — STATE OF CALIFORNIA

THE STATE OF CALIFORNIA OR ITS OFFICERS OR AGENTS SHALL NOT BE RESPONSIBLE FOR THE ACCURACY OR COMPLETENESS OF SCANNED COPIES OF THIS PLAN SHEET.

TO ACCOMPANY PLANS DATED 2-10-14

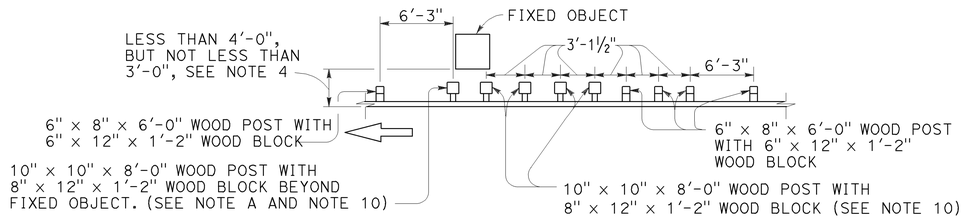

NOTE A: For a series of fixed objects (bridge columns, overhead sign supports, etc.) additional 10" x 10" x 8'-0" wood post with 8" x 12" x 1'-2" wood blocks at 3'-1½" center to center spacing are to be used between fixed object(s).

STRENGTHENED MIDWEST GUARDRAIL SYSTEM SECTIONS FOR FIXED OBJECT

Use strengthened MGS sections with layout Type 16H where minimum clearance between the face of the MGS and fixed object(s) is less than 4'-0", but not less than 3'-0". See Note 4.

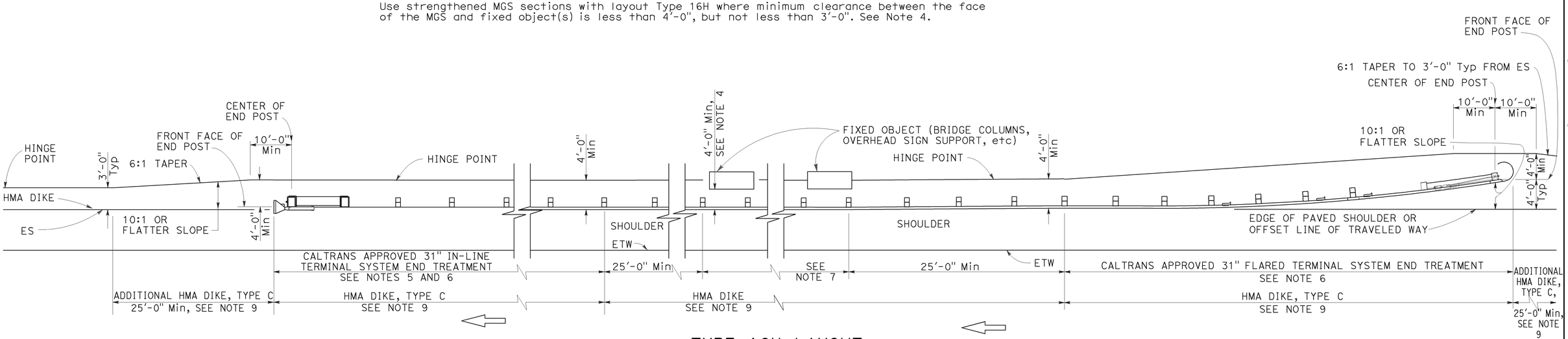

TYPE 16H LAYOUT

(MGS installation at roadside fixed object or objects with 31" flared end treatment and 31" in-line end treatment at the ends of railing)
See Note 8

NOTES:

1. Line post, blocks and hardware to be used are shown on Revised Standard Plans RSP A77L1, RSP A77L2, RSP A77M1, RSP A77N1 and RSP A77N2.
2. MGS post spacing to be 6'-3" center to center, except as otherwise noted.
3. Except as noted, line posts are 6" x 8" x 6'-0" wood with 6" x 12" x 1'-2" wood blocks. W6 x 8.5 or W6 x 9 steel posts, 6'-0" in length, with 6" x 12" x 1'-2" notched wood blocks or notched recycled plastic blocks may be used for 6" x 8" x 6'-0" wood posts with 6" x 12" x 1'-2" wood blocks where applicable and when specified.
4. A 4'-0" minimum clearance is required between the face of the railing and the face of a fixed object located directly behind MGS sections with post spacing at 6'-3". Construct MGS as shown in the detail "Strengthened Midwest Guardrail System Sections for Fixed Objects" on this plan, where the clearance between the face of the railing and the face of a fixed object is less than 4'-0", but not less than 3'-0". Where the clearance is less than 3'-0", a concrete wall or barrier should be constructed to shield the fixed object(s).
5. 31" in-line terminal system end treatments are used where site conditions will not accommodate a 31" flared end treatment.
6. The type of 31" terminal system to be used will be shown on the Project Plans.
7. As site conditions dictate, construct additional MGS to shield fixed object(s). Additional MGS length equal to multiples of 12'-6". Post spacing at 6'-3", except as specified in Note 4.
8. Layout Types 16D through 16L, shown on the A77R Series of Standard PLans, typically used where MGS is recommended to shield roadside fixed object(s) and a crashworthy 31" end treatment is required for both directions of traffic.
9. Where placement of dike is required with MGS, see Revised Standard Plan RSP A77N4 for dike positioning details.
10. W6 x 15 steel post, 8'-0" in length, with 8" x 12" x 1'-2" notched wood block or notched recycled plastic blocks may be used in place of the 10" x 10" x 8'-0" wood post with 8" x 12" x 1'-2" wood block shown in the detail "Strengthened Midwest Guardrail System Sections for Fixed Object".

STATE OF CALIFORNIA
DEPARTMENT OF TRANSPORTATION

MIDWEST GUARDRAIL SYSTEM TYPICAL LAYOUTS FOR ROADSIDE FIXED OBJECTS

NO SCALE

RSP A77R6 DATED JULY 19, 2013 SUPPLEMENTS THE STANDARD PLANS BOOK DATED 2010.

REVISED STANDARD PLAN RSP A77R6

2010 REVISED STANDARD PLAN RSP A77R6

6-19-13

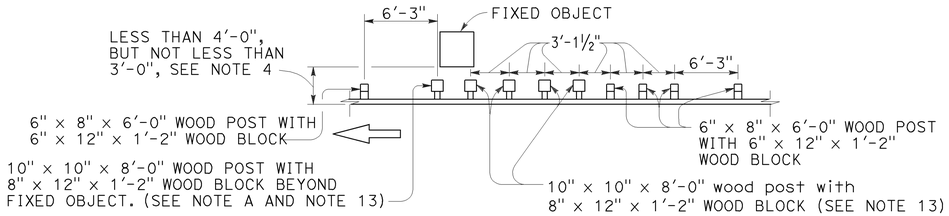

NOTE A: For a series of fixed objects (bridge columns, overhead sign supports, etc.) additional 10" x 10" x 8'-0" wood post with 8" x 12" x 1'-2" wood blocks at 3'-1½" center to center spacing are to be used between fixed object(s).

STRENGTHENED MIDWEST GUARDRAIL SYSTEM SECTIONS FOR FIXED OBJECT

Use strengthened MGS sections with layout Types 16I or 16J Layouts where minimum clearance between the face of the MGS and fixed object(s) is less than 4'-0", but not less than 3'-0". See Note 4.

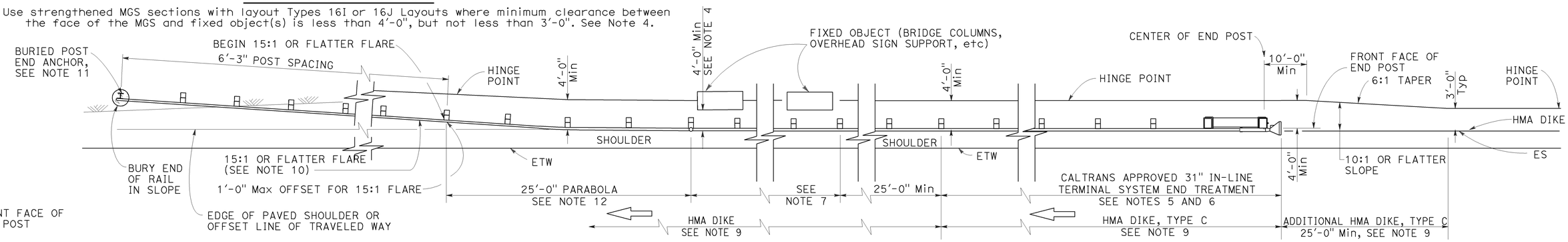

TYPE 16I LAYOUT

(MGS installation at roadside fixed object or objects with 31" in-line end treatment and a buried end anchor treatment at the ends of railing) See Note 8

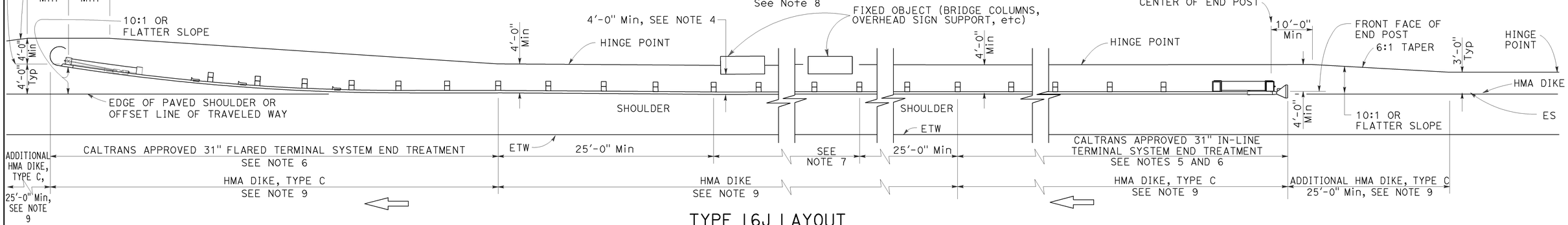

TYPE 16J LAYOUT

(MGS installation at roadside fixed object or objects With a 31" in-line end treatment and a 31" flared end treatment at the ends of railing) See Note 8

PARABOLIC FLARE OFFSETS

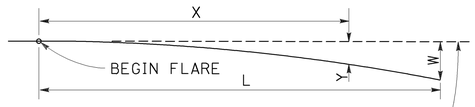

BASE LINE (EDGE OF PAVED SHOULDER OR OFFSET LINE OF EDGE OF TRAVELED WAY)

$$Y = \frac{WX^2}{L^2}$$

Y = OFFSET FROM BASE LINE
W = MAXIMUM OFFSET
X = DISTANCE ALONG BASE LINE
L = LENGTH OF FLARE

TYPICAL PARABOLIC LAYOUT

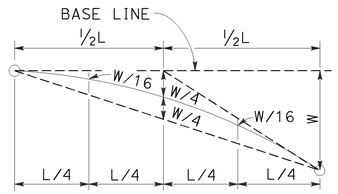

Dist	COUNTY	ROUTE	POST MILES TOTAL PROJECT	SHEET No.	TOTAL SHEETS
03	But,Col,Gln, Sut,Yol,Yub	16,32,45 70,113,162	Var	176	195

Randell D. Hiatt
REGISTERED CIVIL ENGINEER

July 19, 2013
PLANS APPROVAL DATE

REGISTERED PROFESSIONAL ENGINEER — Randell D. Hiatt No. C50200 Exp. 6-30-15 CIVIL — STATE OF CALIFORNIA

THE STATE OF CALIFORNIA OR ITS OFFICERS OR AGENTS SHALL NOT BE RESPONSIBLE FOR THE ACCURACY OR COMPLETENESS OF SCANNED COPIES OF THIS PLAN SHEET.

TO ACCOMPANY PLANS DATED 2-10-14

NOTES:

1. Line post, blocks and hardware to be used are shown on Revised Standard Plans RSP A77L1, RSP A77L2, RSP A77M1, RSP A77N1 and RSP A77N2.
2. MGS post spacing to be 6'-3" center to center, except as otherwise noted.
3. Except as noted, line posts are 6" x 8" x 6'-0" wood with 6" x 12" x 1'-2" wood blocks. W6 x 8.5 or W6 x 9 steel posts, 6'-0" in length, with 6" x 12" x 1'-2" notched wood blocks or notched recycled plastic blocks may be used for 6" x 8" x 6'-0" wood posts with 6" x 12" x 1'-2" wood blocks where applicable and when specified.
4. A 4'-0" minimum clearance is required between the face of the railing and the face of a fixed object located directly behind MGS sections with post spacing at 6'-3". Construct MGS as shown in the detail "Strengthened Midwest Guardrail System Sections for Fixed Objects" on this plan, where the clearance between the face of the railing and the face of a fixed object is less than 4'-0", but not less than 3'-0". Where the clearance is less than 3'-0", a concrete wall or barrier should be constructed to shield the fixed object(s).
5. 31" in-line terminal system end treatments are used where site conditions will not accommodate a 31" flared end treatment.
6. The type of 31" terminal system to be used will be shown on the Project Plans.
7. As site conditions dictate, construct additional MGS to shield fixed object(s). Additional MGS length equal to multiples of 12'-6". Post spacing at 6'-3", except as specified in Note 4.
8. Layout Types 16D through 16L, shown on the A77R Series of Standard Plans, are typically used where MGS is recommended to shield roadside fixed object(s) and a crashworthy 31" end treatment is required for both directions of traffic.
9. Where placement of dike is required with guard railing, see Revised Standard Plan RSP A77N4 for dike positioning details.
10. The 15:1 or flatter flare for the buried post anchor is based on the edge of the paved shoulder or offset line of edge of the traveled way. The length of MGS within the 15:1 or flatter flare is based on site conditions and should be a length equal to multiples of 12'-6".
11. For details of Buried Post End Anchor, see Revised Standard Plan RSP A77T2.
12. For typical flare offsets for 25'-0" length parabola with maximum offset of 1'-0", see Revised Standard Plan RSP A77P1.
13. W6 x 15 steel post, 8'-0" in length, with 8" x 12" x 1'-2" notched wood block or notched recycled plastic blocks may be used in place of the 10" x 10" x 8'-0" wood post with 8" x 12" x 1'-2" wood block shown in the detail "Strengthened Midwest Guardrail System Sections for Fixed Object".

STATE OF CALIFORNIA
DEPARTMENT OF TRANSPORTATION

MIDWEST GUARDRAIL SYSTEM TYPICAL LAYOUTS FOR ROADSIDE FIXED OBJECTS

NO SCALE

RSP A77R7 DATED JULY 19, 2013 SUPPLEMENTS THE STANDARD PLANS BOOK DATED 2010.

REVISED STANDARD PLAN RSP A77R7

2010 REVISED STANDARD PLAN RSP A77R7

6-19-13

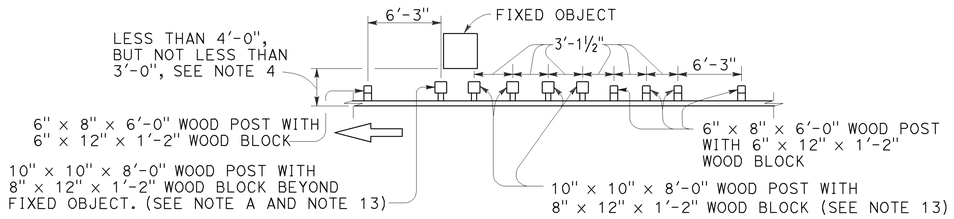

NOTE A: For a series of fixed objects (bridge columns, overhead sign supports, etc.) additional 10" x 10" x 8'-0" wood post with 8" x 12" x 1'-2" wood blocks at 3'-1½" center to center spacing are to be used between fixed object(s).

STRENGTHENED MIDWEST GUARDRAIL SYSTEM SECTIONS FOR FIXED OBJECT

Use strengthened MGS sections with layout Types 16K or 16L layouts where minimum clearance between the face of the MGS and fixed object(s) is less than 4'-0", but not less than 3'-0". See Note 4.

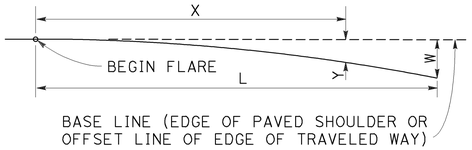

$$Y = \frac{WX^2}{L^2}$$

Y = OFFSET FROM BASE LINE
W = MAXIMUM OFFSET
X = DISTANCE ALONG BASE LINE
L = LENGTH OF FLARE

PARABOLIC FLARE OFFSETS

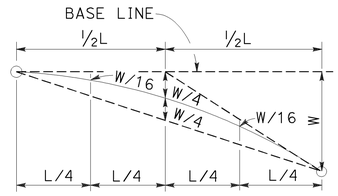

TYPICAL PARABOLIC LAYOUT

Dist	COUNTY	ROUTE	POST MILES TOTAL PROJECT	SHEET No.	TOTAL SHEETS
03	But,Col,Gln, Sut,Yol,Yub	16,32,45 70,113,162	Var	177	195

Randell D. Hiatt
REGISTERED CIVIL ENGINEER

July 19, 2013
PLANS APPROVAL DATE

REGISTERED PROFESSIONAL ENGINEER — Randell D. Hiatt No. C50200 Exp. 6-30-15 CIVIL — STATE OF CALIFORNIA

THE STATE OF CALIFORNIA OR ITS OFFICERS OR AGENTS SHALL NOT BE RESPONSIBLE FOR THE ACCURACY OR COMPLETENESS OF SCANNED COPIES OF THIS PLAN SHEET.

TO ACCOMPANY PLANS DATED 2-10-14

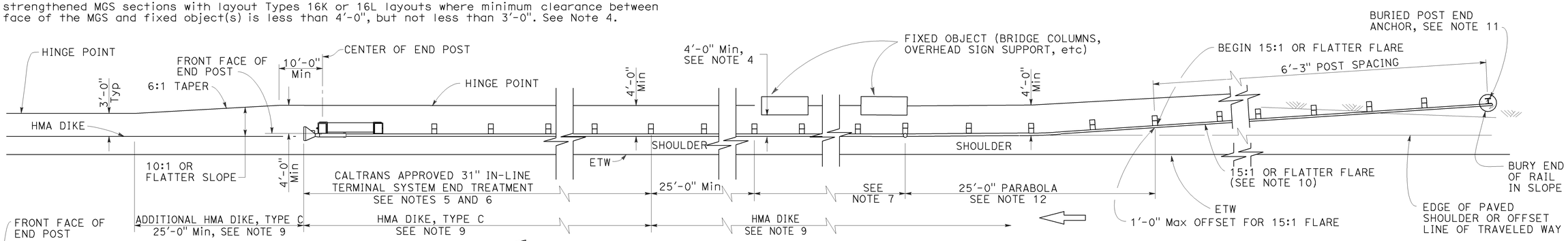

TYPE 16K LAYOUT

(MGS installation at roadside fixed object or objects with a buried end anchor treatment and a 31" in-line end treatment at the ends of railing) See Note 8

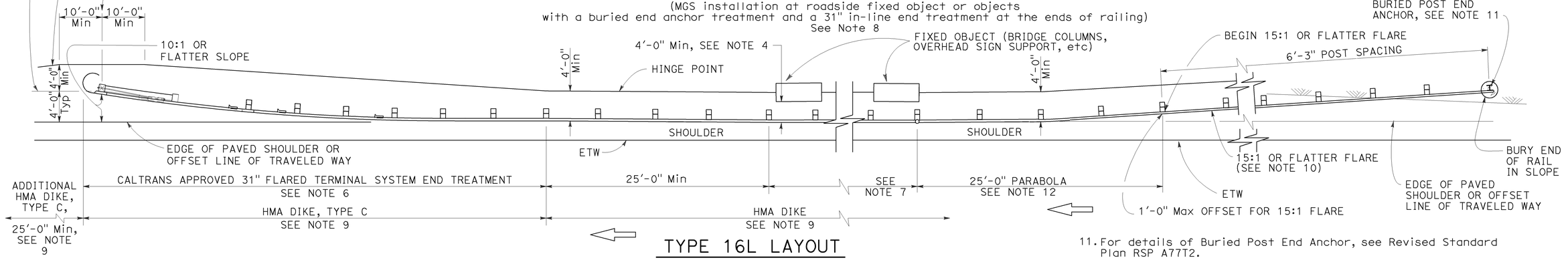

TYPE 16L LAYOUT

(MGS installation at roadside fixed object or objects with a buried end anchor treatment and a 31" flared end treatment at the ends of railing) See Note 8

NOTES:

1. Line post, blocks and hardware to be used are shown on Revised Standard Plans RSP A77L1, RSP A77L2, RSP A77M1, RSP A77N1 and RSP A77N2.
2. MGS post spacing to be 6'-3" center to center, except as otherwise noted.
3. Except as noted, line posts are 6" x 8" x 6'-0" wood with 6" x 12" x 1'-2" wood blocks. W6 x 8.5 or W6 x 9 steel posts, 6'-0" in length, with 6" x 12" x 1'-2" notched wood blocks or notched recycled plastic blocks may be used for 6" x 8" x 6'-0" wood posts with 6" x 12" x 1'-2" wood blocks where applicable and when specified.
4. A 4'-0" minimum clearance is required between the face of the railing and the face of a fixed object located directly behind MGS sections with post spacing at 6'-3". Construct MGS as shown in the detail "Strengthened Midwest Guardrail System Sections for Fixed Objects" on this plan, where the clearance between the face of the railing and the face of a fixed object is less than 4'-0", but not less than 3'-0". Where the clearance is less than 3'-0", a concrete wall or barrier should be constructed to shield the fixed object(s).
5. 31" in-line terminal system end treatments are used where site conditions will not accommodate a 31" flared end treatment.
6. The type of 31" terminal system to be used will be shown on the Project Plans.
7. As site conditions dictate, construct additional MGS to shield fixed object(s). Additional MGS length equal to multiples of 12'-6". Post spacing at 6'-3", except as specified in Note 4.
8. Layout Types 16D through 16L, shown on the A77R Series of Standard Plans are typically used where MGS is recommended to shield roadside fixed object(s) and a crashworthy 31" end treatment is required for both directions of traffic.
9. Where placement of dike is required with MGS, see Revised Standard Plan RSP A77N4 for dike positioning details.
10. The 15:1 or flatter flare for the buried post anchor is based on the edge of the paved shoulder or offset line of edge of the traveled way. The length of MGS within the 15:1 or flatter flare is based on site conditions and should be a length equal to multiples of 12'-6".
11. For details of Buried Post End Anchor, see Revised Standard Plan RSP A77T2.
12. For typical flare offsets for 25'-0" length parabola with maximum offset of 1'-0", see Revised Standard Plan RSP A77P1.
13. W6 x 15 steel post, 8'-0" in length, with 8" x 12" x 1'-2" notched wood block or notched recycled plastic blocks may be used in place of the 10" x 10" x 8'-0" wood post with 8" x 12" x 1'-2" wood block shown in the detail "Strengthened Midwest Guardrail System Sections for Fixed Object".

STATE OF CALIFORNIA
DEPARTMENT OF TRANSPORTATION

MIDWEST GUARDRAIL SYSTEM TYPICAL LAYOUTS FOR ROADSIDE FIXED OBJECTS

NO SCALE

RSP A77R8 DATED JULY 19, 2013 SUPPLEMENTS THE STANDARD PLANS BOOK DATED 2010.

REVISED STANDARD PLAN RSP A77R8

2010 REVISED STANDARD PLAN RSP A77R8

6-19-13

Dist	COUNTY	ROUTE	POST MILES TOTAL PROJECT	SHEET No.	TOTAL SHEETS
03	But,Col,Gln, Sut,Yol,Yub	16,32,45 70,113,162	Var	178	195

Randell D. Hiatt
REGISTERED CIVIL ENGINEER

November 15, 2013
PLANS APPROVAL DATE

REGISTERED PROFESSIONAL ENGINEER
Randell D. Hiatt
No. C50200
Exp. 6-30-15
CIVIL
STATE OF CALIFORNIA

THE STATE OF CALIFORNIA OR ITS OFFICERS OR AGENTS SHALL NOT BE RESPONSIBLE FOR THE ACCURACY OR COMPLETENESS OF SCANNED COPIES OF THIS PLAN SHEET.

TO ACCOMPANY PLANS DATED 2-10-14

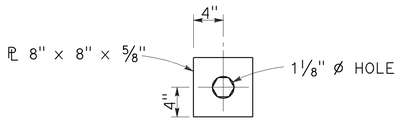

DETAIL "A"
CABLE CONNECTION
END PLATE

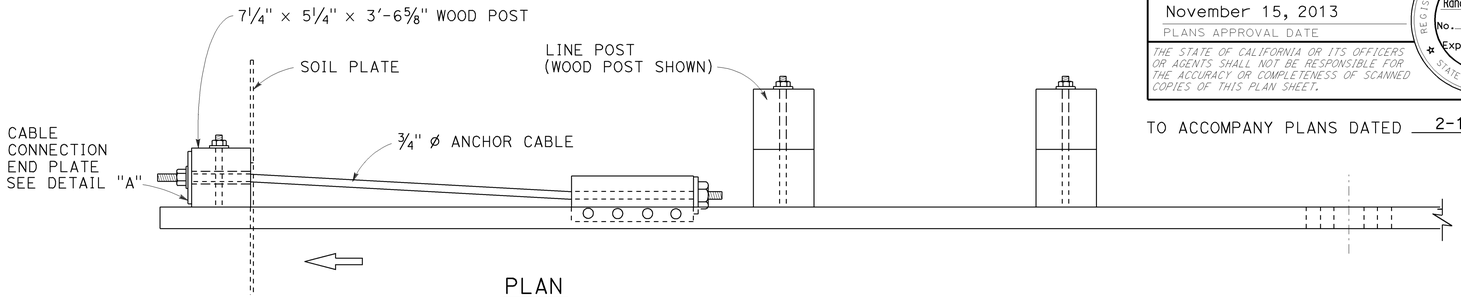

PLAN

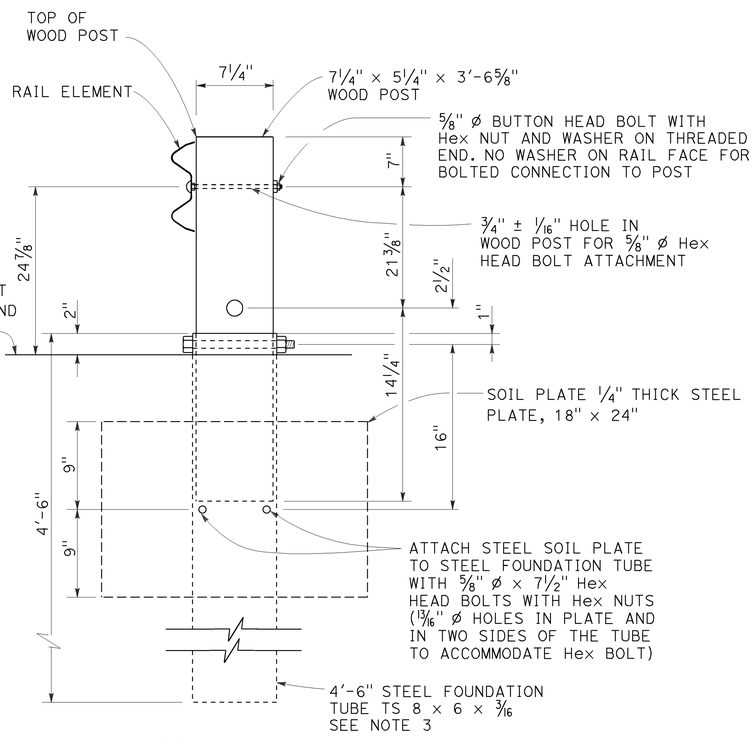

SECTION A-A

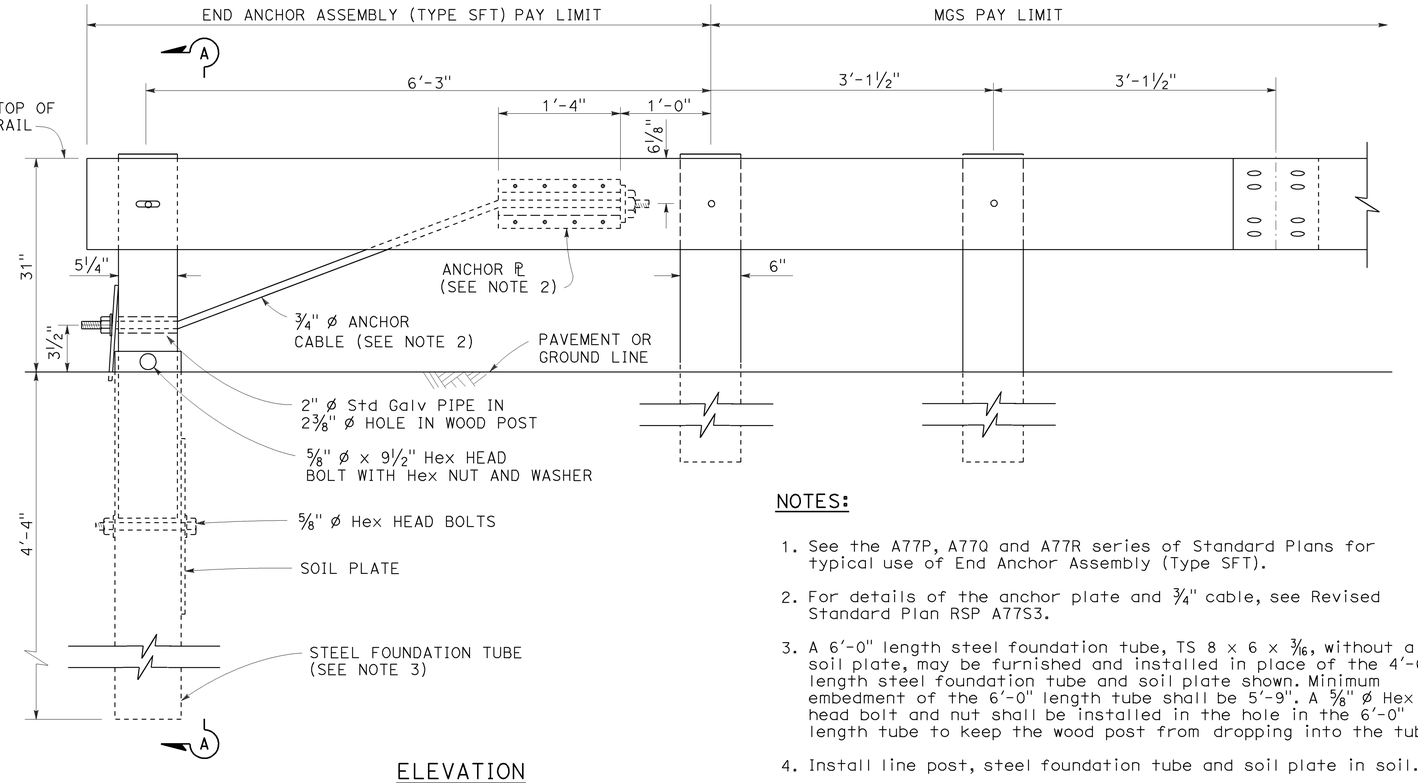

ELEVATION

END ANCHOR
ASSEMBLY (TYPE SFT)
See Note 1

NOTES:

1. See the A77P, A77Q and A77R series of Standard Plans for typical use of End Anchor Assembly (Type SFT).
2. For details of the anchor plate and 3/4" cable, see Revised Standard Plan RSP A77S3.
3. A 6'-0" length steel foundation tube, TS 8 x 6 x 3/16, without a soil plate, may be furnished and installed in place of the 4'-6" length steel foundation tube and soil plate shown. Minimum embedment of the 6'-0" length tube shall be 5'-9". A 5/8" ø Hex head bolt and nut shall be installed in the hole in the 6'-0" length tube to keep the wood post from dropping into the tube.
4. Install line post, steel foundation tube and soil plate in soil.

STATE OF CALIFORNIA
DEPARTMENT OF TRANSPORTATION

MIDWEST GUARDRAIL SYSTEM
END ANCHOR ASSEMBLY
(TYPE SFT)

NO SCALE

RSP A77S1 DATED NOVEMBER 15, 2013 SUPERSEDES RSP A77S1
DATED JULY 19, 2013 THAT SUPPLEMENTS THE STANDARD PLANS BOOK DATED 2010.

REVISED STANDARD PLAN RSP A77S1

2010 REVISED STANDARD PLAN RSP A77S1

10-4-13

Dist	COUNTY	ROUTE	POST MILES TOTAL PROJECT	SHEET No.	TOTAL SHEETS
03	But,Col,Gln, Sut,Yol,Yub	16,32,45 70,113,162	Var	179	195

Randell D. Hiatt
REGISTERED CIVIL ENGINEER

July 19, 2013
PLANS APPROVAL DATE

REGISTERED PROFESSIONAL ENGINEER
Randell D. Hiatt
No. C50200
Exp. 6-30-15
CIVIL
STATE OF CALIFORNIA

THE STATE OF CALIFORNIA OR ITS OFFICERS OR AGENTS SHALL NOT BE RESPONSIBLE FOR THE ACCURACY OR COMPLETENESS OF SCANNED COPIES OF THIS PLAN SHEET.

TO ACCOMPANY PLANS DATED 2-10-14

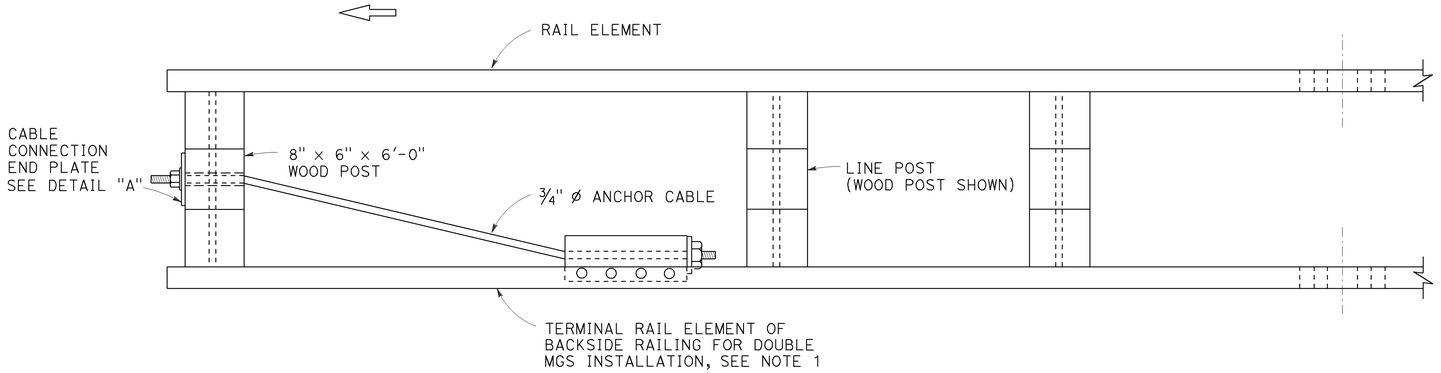

PLAN

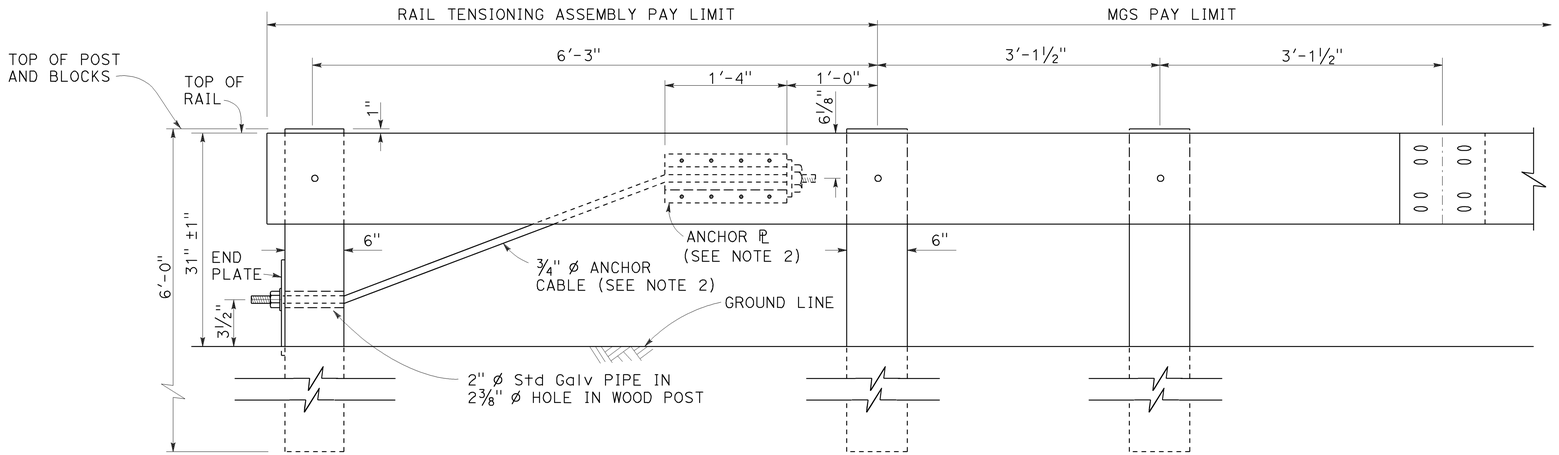

ELEVATION
RAIL TENSIONING ASSEMBLY
See Note 1

NOTES:

1. See Revised Standard Plans RSP A77Q3 and RSP A77R1 for typical use of rail tensioning assembly.
2. For details of the anchor plate and ¾" cable, see Revised Standard Plan RSP A77S3.

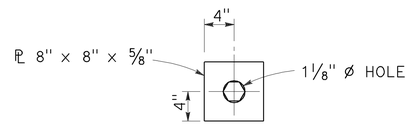

DETAIL "A"
CABLE CONNECTION END PLATE

STATE OF CALIFORNIA
DEPARTMENT OF TRANSPORTATION

MIDWEST GUARDRAIL SYSTEM
RAIL TENSIONING ASSEMBLY

NO SCALE

RSP A77S2 DATED JULY 19, 2013 SUPPLEMENTS THE STANDARD PLANS BOOK DATED 2010.

REVISED STANDARD PLAN RSP A77S2

2010 REVISED STANDARD PLAN RSP A77S2

7-3-13

NOTE:

See Revised Standard Plans RSP A77S1, RSP A77S2 and RSP A77T1 for typical use of anchor cable and anchor plate.

Dist	COUNTY	ROUTE	POST MILES TOTAL PROJECT	SHEET No.	TOTAL SHEETS
03	But,Col,Gln, Sut,Yol,Yub	16,32,45 70,113,162	Var	180	195

Randell D. Hiatt
REGISTERED CIVIL ENGINEER

November 15, 2013
PLANS APPROVAL DATE

REGISTERED PROFESSIONAL ENGINEER
Randell D. Hiatt
No. C50200
Exp. 6-30-15
CIVIL
STATE OF CALIFORNIA

THE STATE OF CALIFORNIA OR ITS OFFICERS OR AGENTS SHALL NOT BE RESPONSIBLE FOR THE ACCURACY OR COMPLETENESS OF SCANNED COPIES OF THIS PLAN SHEET.

TO ACCOMPANY PLANS DATED 2-10-14

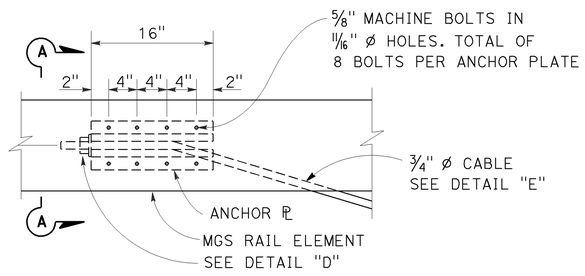

ANCHOR PLATE DETAIL
(MGS shown, TBB similar)

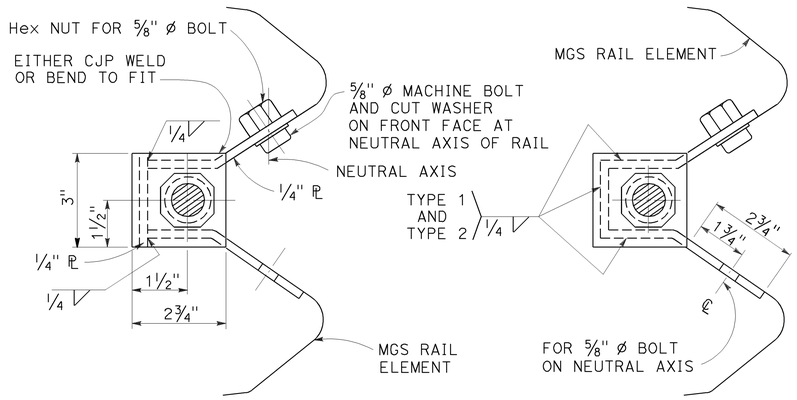

NOTE:
Dimensioning applies to both types.

SECTION A-A
(ALTERNATIVE TYPE 1)

SECTION A-A
(ALTERNATIVE TYPE 2)

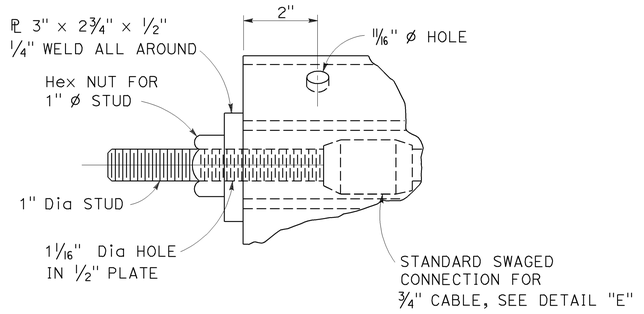

DETAIL "D"

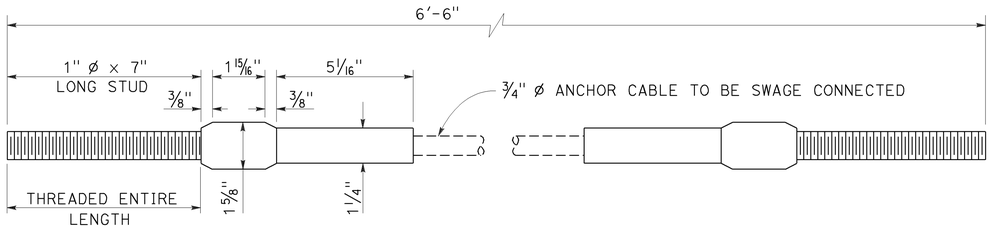

ANCHOR CABLE WITH SWAGED FITTING AND STUD
DETAIL "E"

STATE OF CALIFORNIA
DEPARTMENT OF TRANSPORTATION

METAL RAILING ANCHOR CABLE AND ANCHOR PLATE DETAILS

NO SCALE

RSP A77S3 DATED NOVEMBER 15, 2013 SUPERSEDES RSP A77S3 DATED JULY 19, 2013 THAT SUPPLEMENTS THE STANDARD PLANS BOOK DATED 2010.

REVISED STANDARD PLAN RSP A77S3

2010 REVISED STANDARD PLAN RSP A77S3

10-4-13

Dist	COUNTY	ROUTE	POST MILES TOTAL PROJECT	SHEET No.	TOTAL SHEETS
03	But,Col,Gln, Sut,Yol,Yub	16,32,45 70,113,162	Var	181	195

Randell D. Hiatt
REGISTERED CIVIL ENGINEER

November 15, 2013
PLANS APPROVAL DATE

REGISTERED PROFESSIONAL ENGINEER
Randell D. Hiatt
No. C50200
Exp. 6-30-15
CIVIL
STATE OF CALIFORNIA

THE STATE OF CALIFORNIA OR ITS OFFICERS OR AGENTS SHALL NOT BE RESPONSIBLE FOR THE ACCURACY OR COMPLETENESS OF SCANNED COPIES OF THIS PLAN SHEET.

TO ACCOMPANY PLANS DATED 2-10-14

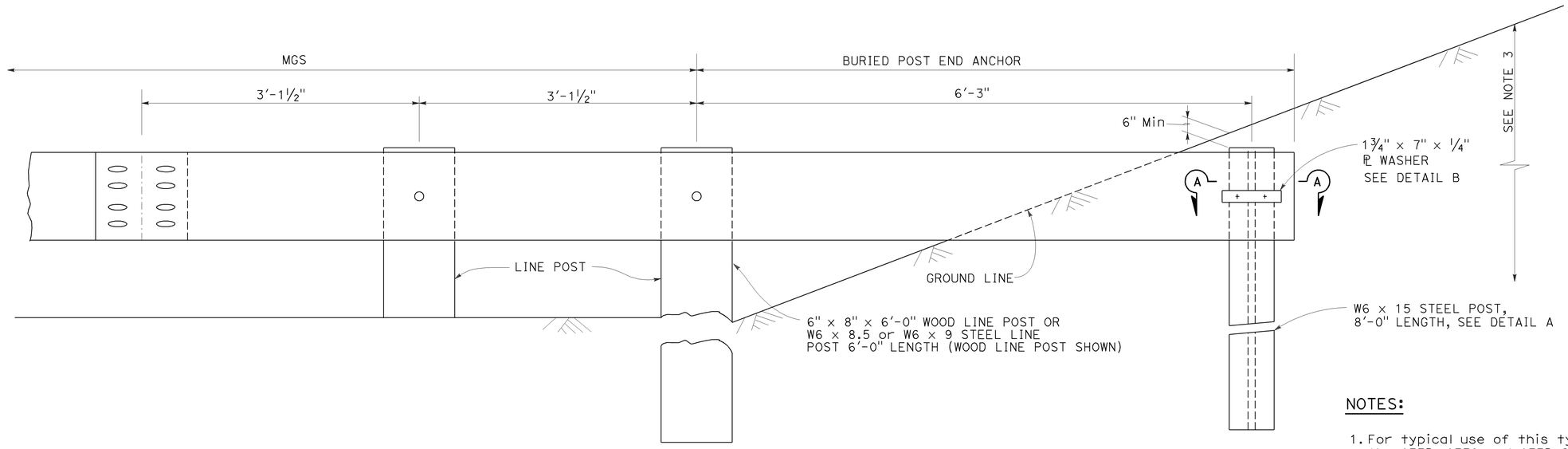

BURIED POST END ANCHOR

See Note 3

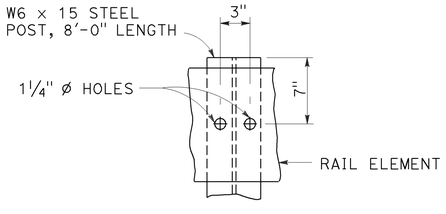

DETAIL A

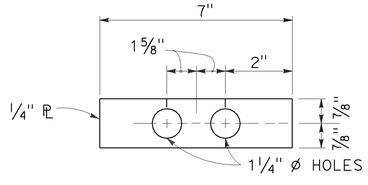

DETAIL B

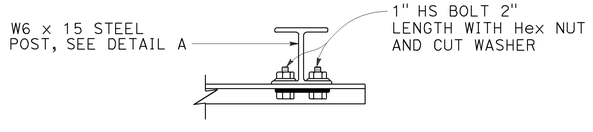

SECTION A-A

NOTES:

1. For typical use of this type of end anchor with MGS see the A77P, A77Q and A77R Series of the Standard Plans.
2. Holes excavation in the slope to construct the buried post end anchor shall be backfilled with selected earth, placed in layers approximately 1'-0" thick. Each layer shall be moistened and thoroughly compacted.
3. The buried post end anchor shall only be constructed at those locations where the slope perpendicular to the roadway is non-traversable.

STATE OF CALIFORNIA
DEPARTMENT OF TRANSPORTATION

MIDWEST GUARDRAIL SYSTEM BURIED POST END ANCHOR

NO SCALE

RSP A77T2 DATED NOVEMBER 15, 2013 SUPERSEDES RSP A77T2
DATED JULY 19, 2013 THAT SUPPLEMENTS THE STANDARD PLANS BOOK DATED 2010.

REVISED STANDARD PLAN RSP A77T2

2010 REVISED STANDARD PLAN RSP A77T2

10-4-13

Dist	COUNTY	ROUTE	POST MILES TOTAL PROJECT	SHEET No.	TOTAL SHEETS
03	But,Col,Gln, Sut,Yol,Yub	16,32,45 70,113,162	Var	182	195

Randell D. Hiatt
REGISTERED CIVIL ENGINEER

July 19, 2013
PLANS APPROVAL DATE

REGISTERED PROFESSIONAL ENGINEER
Randell D. Hiatt
No. C50200
Exp. 6-30-15
CIVIL
STATE OF CALIFORNIA

THE STATE OF CALIFORNIA OR ITS OFFICERS OR AGENTS SHALL NOT BE RESPONSIBLE FOR THE ACCURACY OR COMPLETENESS OF SCANNED COPIES OF THIS PLAN SHEET.

TO ACCOMPANY PLANS DATED 2-10-14

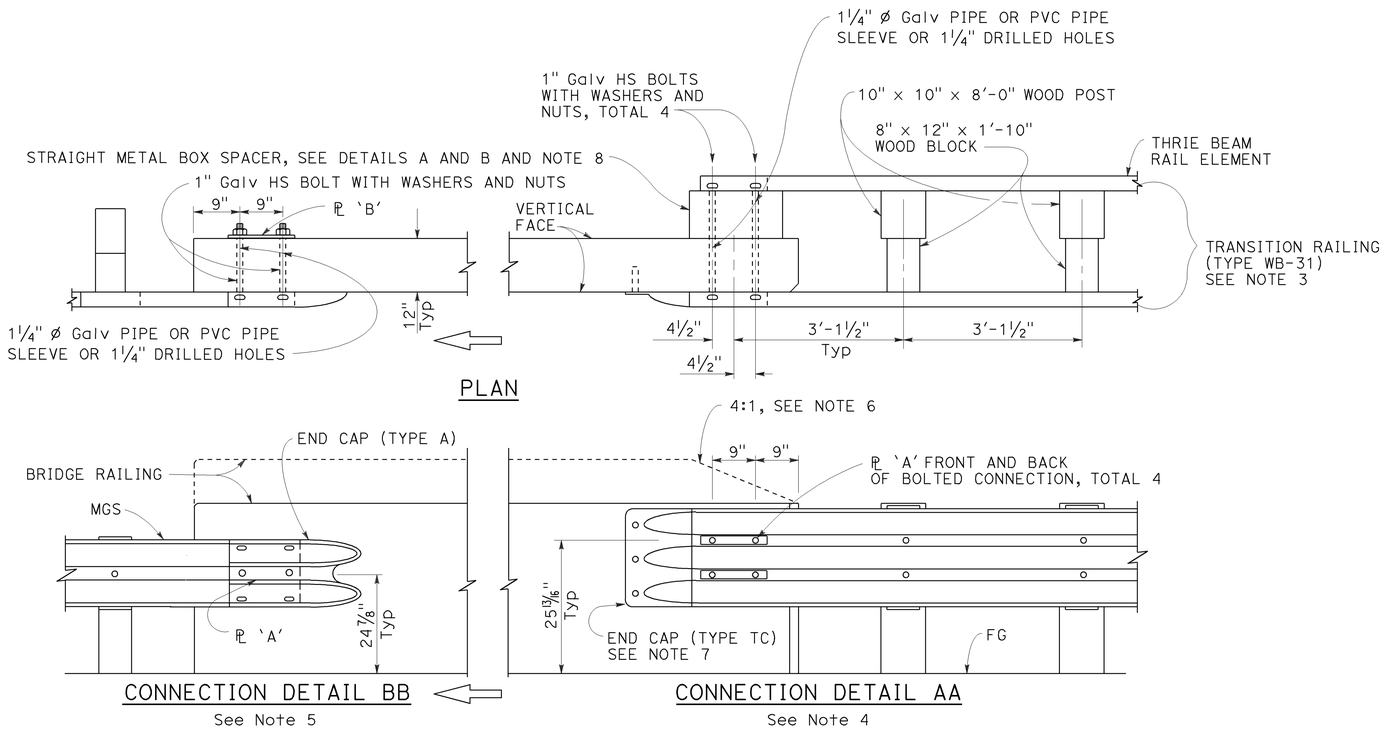

MIDWEST GUARDRAIL SYSTEM CONNECTION TO BRIDGE RAILING WITHOUT SIDEWALK

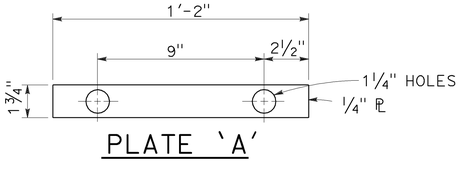

PLATE 'A'

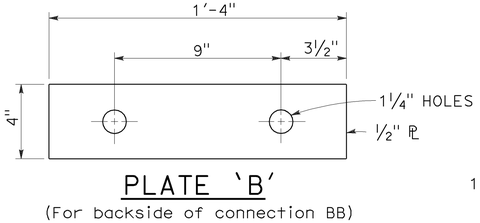

PLATE 'B'
(For backside of connection BB)

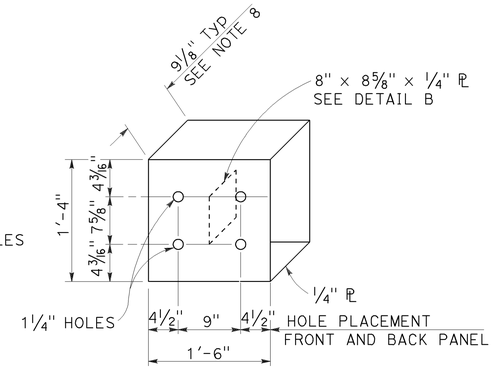

DETAIL A

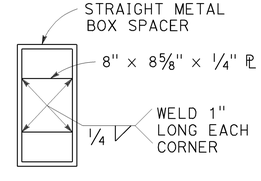

DETAIL B

STRAIGHT METAL BOX SPACER

NOTES:

1. See Revised Standard Plan RSP A77U2 for additional connection details to bridges without sidewalks.
2. Additional details of posts, blocks and hardware are shown on Revised Standard Plans RSP A77M1, RSP A77N1 and RSP A77N2.
3. For additional details of Transition Railing (Type WB-31), see Revised Standard Plan RSP A77U4. Transition Railing (Type WB-31) transitions the 12 gauge MGS railing section to a heavier gage nested thrie beam railing section which is connected to the concrete bridge railing.
4. For typical use of Connection Detail AA, see Layout Types 12A and 12B on Revised Standard Plan RSP A77Q1, Layout Types 12C and 12D on Revised Standard Plan RSP A77Q2, and Layout Type 12E on Revised Standard Plan RSP A77Q3.
5. For typical use of Connection Detail BB, see Layout Type 12D (structure departure railing connection) on Revised Standard Plan RSP A77Q2 and Layout Type 12DD on Revised Standard Plan RSP A77Q5.
6. Where the height of the bridge railing exceeds the height of the thrie beam railing by more than 1" at Connection Detail AA, taper the top of the end of the bridge railing at 4:1 to match the top elevation of the thrie beam rail.
7. For details of End Cap (Type TC), see Revised Standard Plan RSP A77U4.
8. See Revised Standard Plan RSP A77U4 for additional details regarding depth dimension for straight metal box spacer.

STATE OF CALIFORNIA
DEPARTMENT OF TRANSPORTATION

MIDWEST GUARDRAIL SYSTEM CONNECTIONS TO BRIDGE RAILINGS WITHOUT SIDEWALKS DETAILS No. 1

NO SCALE

RSP A77U1 DATED JULY 19, 2013 SUPPLEMENTS THE STANDARD PLANS BOOK DATED 2010.

REVISED STANDARD PLAN RSP A77U1

2010 REVISED STANDARD PLAN RSP A77U1

7-8-13

Dist	COUNTY	ROUTE	POST MILES TOTAL PROJECT	SHEET No.	TOTAL SHEETS
03	But,Col,Gln, Sut,Yol,Yub	16,32,45 70,113,162	Var	183	195

Randell D. Hiatt
REGISTERED CIVIL ENGINEER

July 19, 2013
PLANS APPROVAL DATE

REGISTERED PROFESSIONAL ENGINEER — Randell D. Hiatt No. C50200 Exp. 6-30-15 CIVIL — STATE OF CALIFORNIA

THE STATE OF CALIFORNIA OR ITS OFFICERS OR AGENTS SHALL NOT BE RESPONSIBLE FOR THE ACCURACY OR COMPLETENESS OF SCANNED COPIES OF THIS PLAN SHEET.

TO ACCOMPANY PLANS DATED 2-10-14

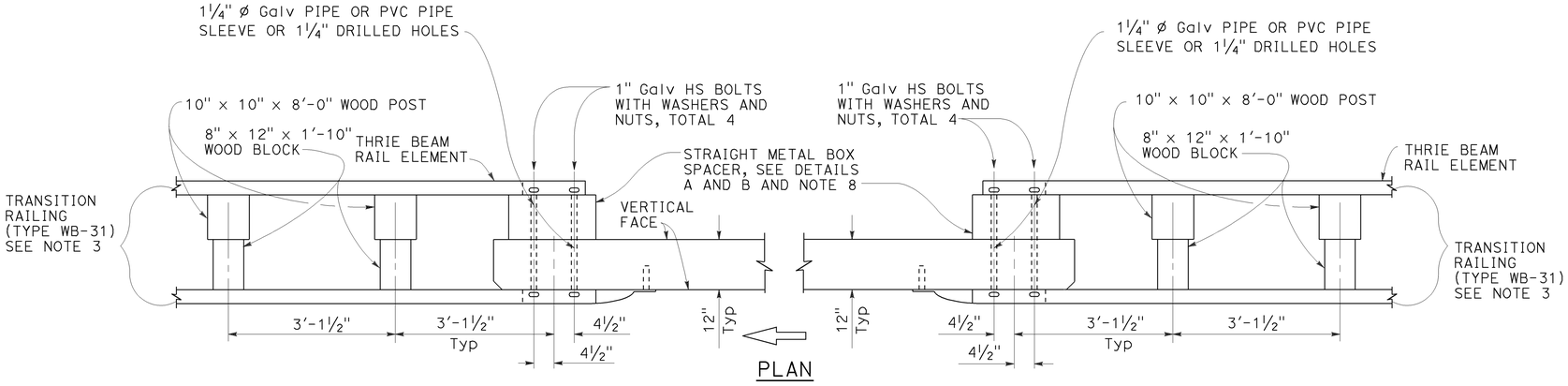

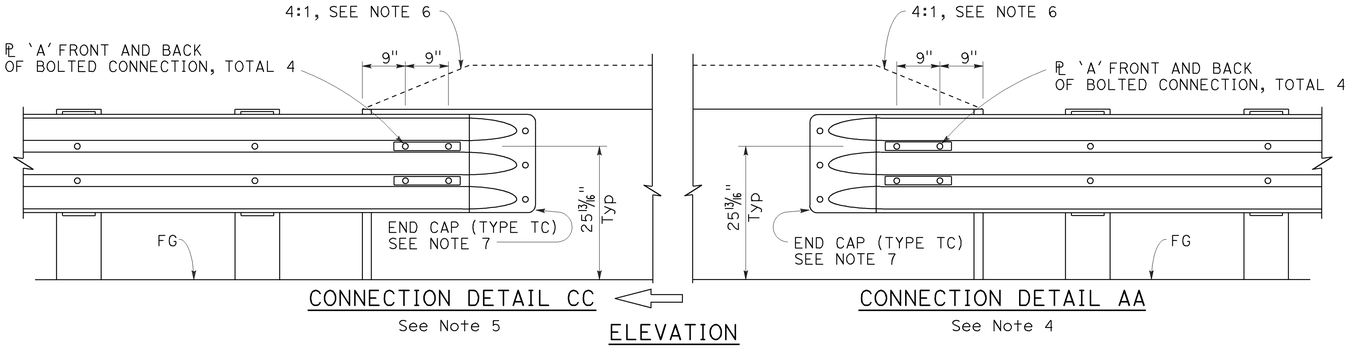

MIDWEST GUARDRAIL SYSTEM CONNECTION TO BRIDGE RAILING WITHOUT SIDEWALK

NOTES:

1. See Revised Standard Plan RSP A77U1 for additional connection details to bridges without sidewalks.
2. Additional details of posts, blocks and hardware are shown on Revised Standard Plans RSP A77M1, RSP A77N1 and RSP A77N2.
3. For additional details of Transition Railing (Type WB-31), see Revised Standard Plan RSP A77U4. Transition Railing (Type WB-31) transitions the 12 gauge MGS railing section to a heavier gage nested thrie beam railing section which is connected to the concrete bridge railing.
4. For typical use of Connection Detail AA, see Layout Types 12A and 12B on Revised Standard Plan RSP A77Q1, Layout Types 12C and 12D on Revised Standard Plan RSP A77Q2, and Layout Type 12E on Revised Standard Plan RSP A77Q3.
5. For typical use of Connection Detail CC, see Layout Types 12AA and 12BB on Revised Standard Plan RSP A77Q4 and Layout Type 12CC on Revised Standard Plan RSP A77Q5.
6. Where the height of the bridge railing exceeds the height of the thrie beam railing by more than 1" at Connection Detail AA and connection Detail CC, taper the top of the end of the bridge railing at 4:1 to match the top elevation of the thrie beam railing.
7. For details of End Cap (Type TC), see Revised Standard Plan RSP A77U4.
8. See Revised Standard Plan RSP A77U4 for additional details regarding depth dimension for straight metal box spacer.

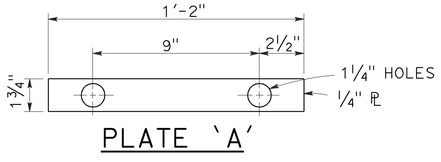

PLATE 'A'

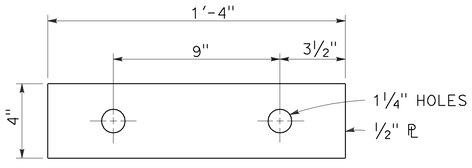

PLATE 'B'
(For backside of connection BB)

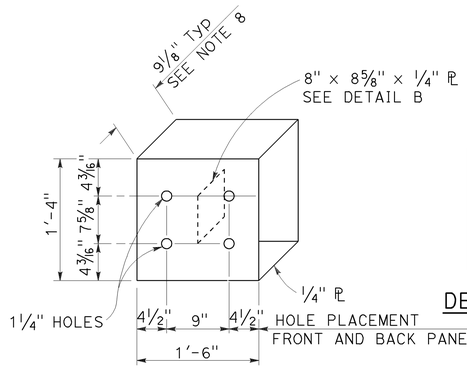

DETAIL A

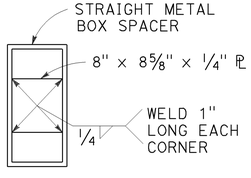

DETAIL B

STRAIGHT METAL BOX SPACER

STATE OF CALIFORNIA
DEPARTMENT OF TRANSPORTATION

MIDWEST GUARDRAIL SYSTEM CONNECTIONS TO BRIDGE RAILINGS WITHOUT SIDEWALKS DETAILS No. 2

NO SCALE

RSP A77U2 DATED JULY 19, 2013 SUPPLEMENTS THE STANDARD PLANS BOOK DATED 2010.

REVISED STANDARD PLAN RSP A77U2

2010 REVISED STANDARD PLAN RSP A77U2

6-20-13

Dist	COUNTY	ROUTE	POST MILES TOTAL PROJECT	SHEET No.	TOTAL SHEETS
03	But,Col,Gln, Sut,Yol,Yub	16,32,45 70,113,162	Var	184	195

Randell D. Hiatt
REGISTERED CIVIL ENGINEER

July 19, 2013
PLANS APPROVAL DATE

REGISTERED PROFESSIONAL ENGINEER
Randell D. Hiatt
No. C50200
Exp. 6-30-15
CIVIL
STATE OF CALIFORNIA

THE STATE OF CALIFORNIA OR ITS OFFICERS OR AGENTS SHALL NOT BE RESPONSIBLE FOR THE ACCURACY OR COMPLETENESS OF SCANNED COPIES OF THIS PLAN SHEET.

TO ACCOMPANY PLANS DATED 2-10-14

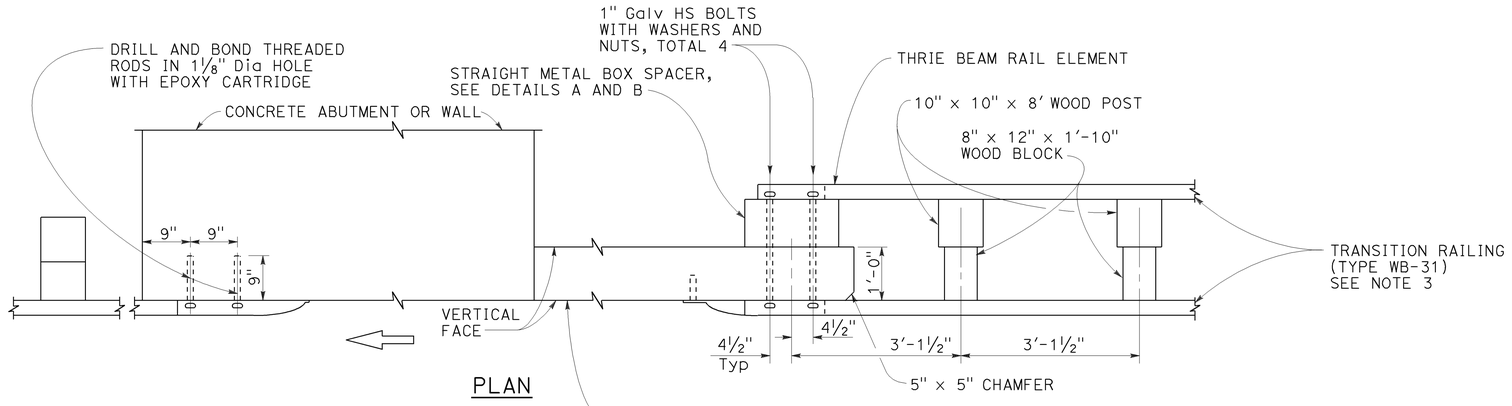

MIDWEST GUARDRAIL SYSTEM CONNECTION TO ABUTMENT OR WALL

NOTES:

1. These connection details apply to abutments and walls.
2. Additional details of posts, blocks and hardware are shown on Revised Standard Plans RSP A77M1, RSP A77N1 and RSP A77N2.
3. For additional details of Transition Railing (Type WB-31), see Revised Standard Plan RSP A77U4. Transition Railing (Type WB-31) transitions the 12 gauge MGS railing section to a heavier gage nested thrie beam railingsection which is connected to the concrete anchor block.
4. For typical use of Connection Details DD, see Layout Types 12A and 12B on Revised Standard Plan RSP A77Q1 and Layout Types 12C and 12D on Revised Standard Plan RSP A77Q2.
5. For typical use of Connection Detail EE, see Layout Type 12D on Revised Standard Plan RSP A77Q2 and Layout Type 12DD on Revised Standard Plan RSP A77Q5.

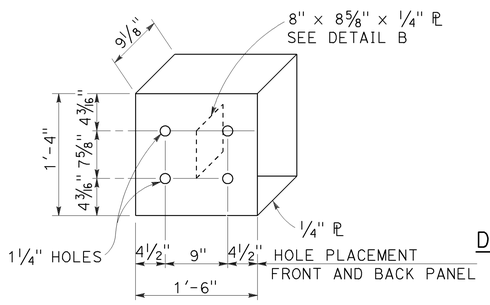

DETAIL A

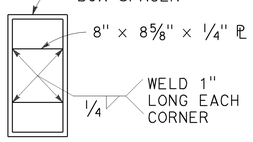

DETAIL B

STRAIGHT METAL BOX SPACER

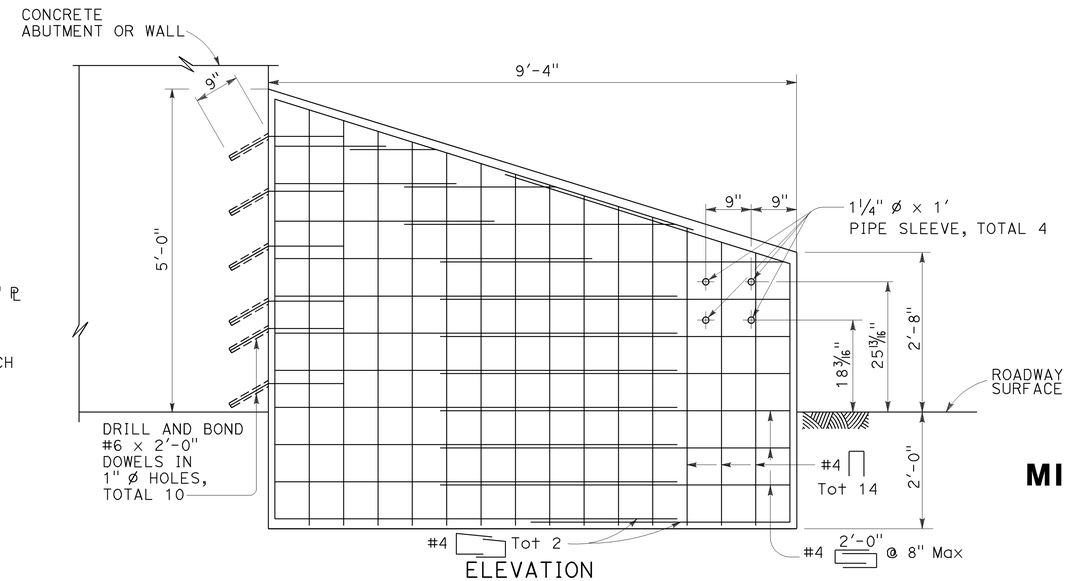

ELEVATION

ANCHOR BLOCK FOR TRANSITION RAILING CONNECTION

DETAIL C

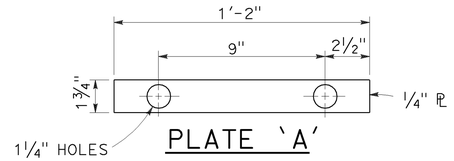

PLATE 'A'

STATE OF CALIFORNIA
DEPARTMENT OF TRANSPORTATION

MIDWEST GUARDRAIL SYSTEM CONNECTIONS TO ABUTMENTS AND WALLS

NO SCALE

RSP A77U3 DATED JULY 19, 2013 SUPPLEMENTS THE STANDARD PLANS BOOK DATED 2010.

REVISED STANDARD PLAN RSP A77U3

2010 REVISED STANDARD PLAN RSP A77U3

7-8-13

Dist	COUNTY	ROUTE	POST MILES TOTAL PROJECT	SHEET No.	TOTAL SHEETS
03	But,Col,Gln, Sut,Yol,Yub	16,32,45 70,113,162	Var	185	195

Randell D. Hiatt
REGISTERED CIVIL ENGINEER

November 15, 2013
PLANS APPROVAL DATE

REGISTERED PROFESSIONAL ENGINEER — Randell D. Hiatt No. C50200 Exp. 6-30-15 CIVIL — STATE OF CALIFORNIA

THE STATE OF CALIFORNIA OR ITS OFFICERS OR AGENTS SHALL NOT BE RESPONSIBLE FOR THE ACCURACY OR COMPLETENESS OF SCANNED COPIES OF THIS PLAN SHEET.

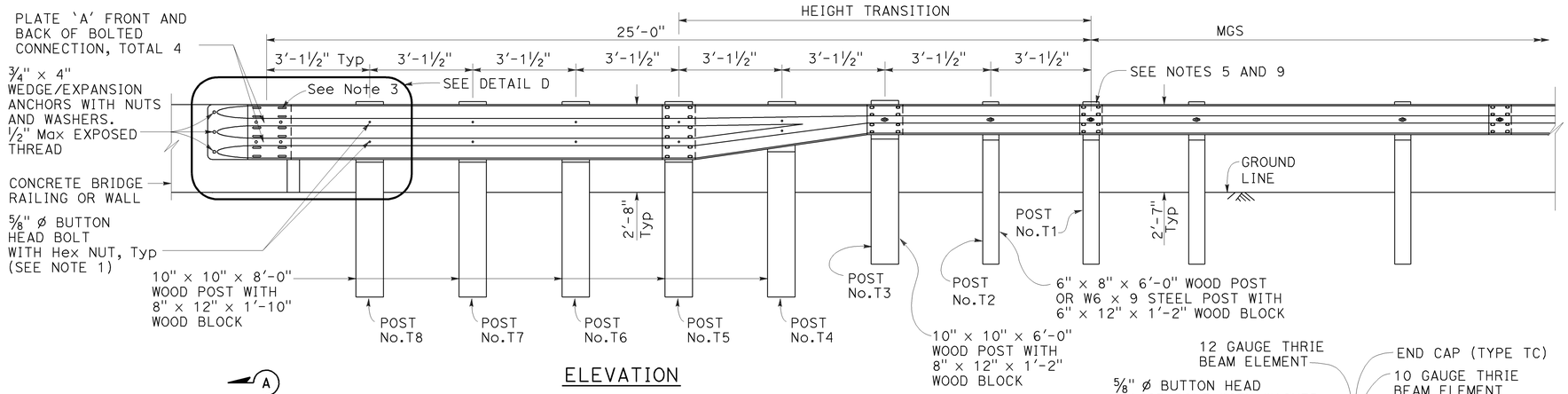

ELEVATION

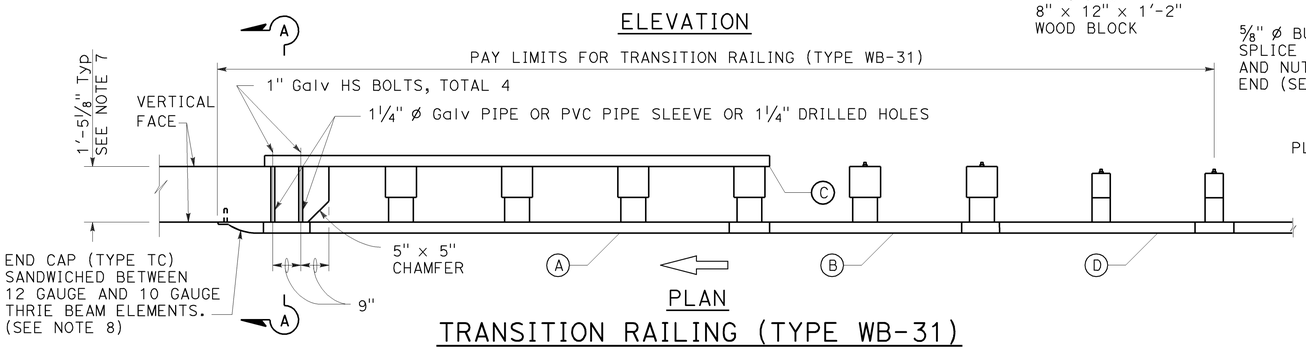

PLAN

TRANSITION RAILING (TYPE WB-31)

(No Blockout Attachment)

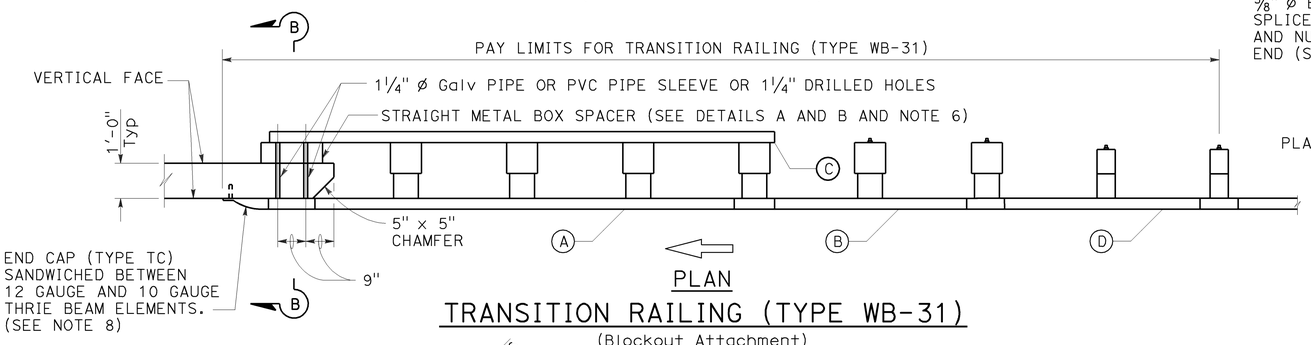

PLAN

TRANSITION RAILING (TYPE WB-31)

(Blockout Attachment)

LEGEND:

- (A) NESTED THRIE BEAM ELEMENTS (ONE 12 GAUGE ELEMENT NESTED OVER ONE 10 GAUGE ELEMENT).
- (B) ONE ASYMMETRICAL 10 GAUGE "W" BEAM TO THRIE BEAM ELEMENT.
- (C) ONE 12 GAUGE THRIE BEAM ELEMENT.
- (D) ONE 10 GAUGE "W" BEAM RAIL ELEMENT (7'-3½"LENGTH)

10 GAUGE = 0.138" THICK
12 GAUGE = 0.108" THICK

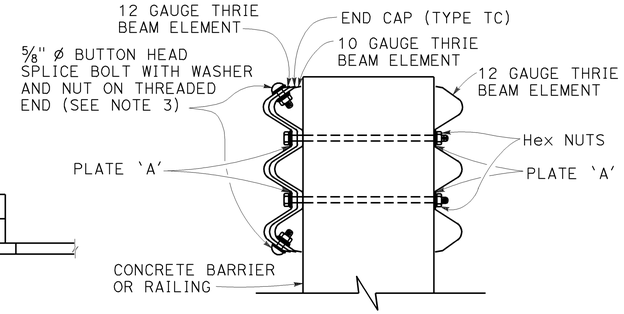

SECTION A-A

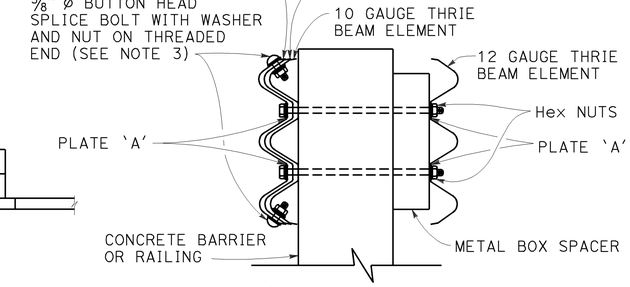

SECTION B-B

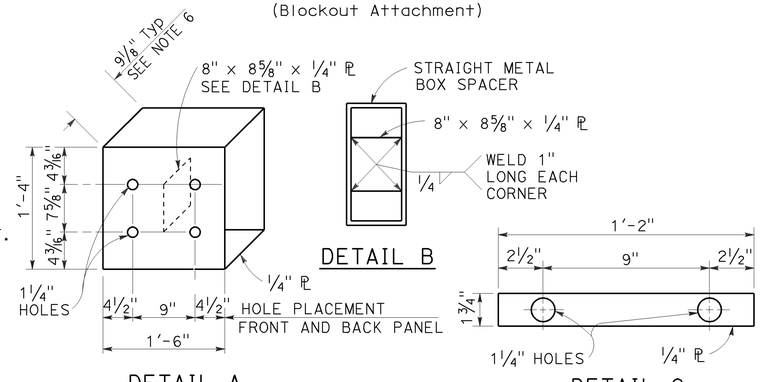

STRAIGHT METAL BOX SPACER

PLATE 'A'

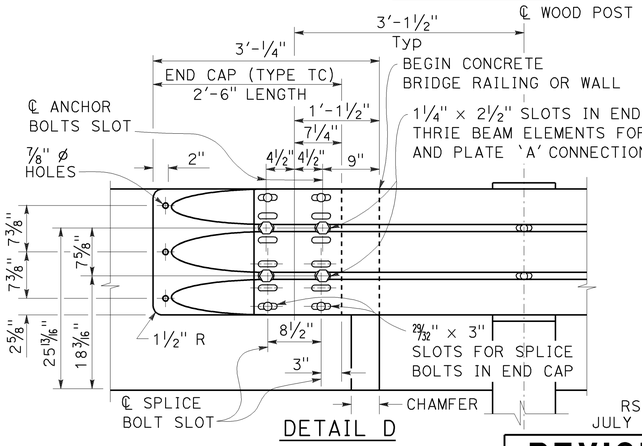

NOTES: TO ACCOMPANY PLANS DATED 2-10-14

1. Use ⅝" ø Button head bolts and hex nuts for connections to posts. No washer on rail face for bolted connections to post.
2. The nested rail elements, end cap, and 'W' beam to thrie beam element may be spliced together prior to bolting the elements to the wood post and concrete barrier or railing.
3. Exterior splice bolt holes for rail element splices at Post No. T5 and the connection to the concrete barrier or railing shall be the standard $^{29}/_{32}$" x 1⅛" slot size. Interior splice bolt holes at these locations may be increased up to 1¼" ø. Only the top 4 and the bottom 4 splice bolts with washers and nuts are required for rail splices at Post No. T5 and the connection to the concrete barrier or railing.
4. The top elevation of Posts No. T2 through No. T7 shall not project more than 1" above the top elevation of the rail element.
5. Typically, the railing connected to Transition Railing (Type WB-31) will be either standard railing section of MGS with height transition ratio of 150:1 or a Caltrans approved 31" end treatment attached to Post No. T1.
6. The depth of the metal box spacer varies from the 9⅛" to 1½" and is dependent on the width of the concrete railing or wall. The combined dimension for the depth of the metal box spacer plus the width of railing or wall is typically 21⅛". Where the space between the backside of the concrete railing or wall and the rear thrie beam element is less than 1½", metal plates similar to Plate 'A' are to be used as spacers.
7. Where the width of the concrete railing or wall is greater than 17⅛", wood blocks are to be used to fill the space created between the backside of Posts No. T5 through No. T8 and the rear thrie beam element. These wood blocks shall be 8" in width and 1'-2" in length. The dimension between the front thrie beam element and the rear thrie beam element is to match the width of the concrete railing or wall.
8. End cap may be installed over 12 gauge and 10 gauge thrie beam elements where transition railing is installed on the departure end of bridge railing.
9. Conform standard railing section height to 31" at Post No. T1 using height transition ratio of 150:1.

STATE OF CALIFORNIA
DEPARTMENT OF TRANSPORTATION

MIDWEST GUARDRAIL SYSTEM TRANSITION RAILING (TYPE WB-31)

NO SCALE

RSP A77U4 DATED NOVEMBER 15, 2013 SUPERSEDES RSP A77U4 DATED JULY 19, 2013 THAT SUPPLEMENTS THE STANDARD PLANS BOOK DATED 2010.

REVISED STANDARD PLAN RSP A77U4

2010 REVISED STANDARD PLAN RSP A77U4

10-4-13

Dist	COUNTY	ROUTE	POST MILES TOTAL PROJECT	SHEET No.	TOTAL SHEETS
03	But,Col,Gln, Sut,Yol,Yub	16,32,45 70,113,162	Var	186	195

Randell D. Hiatt
REGISTERED CIVIL ENGINEER

July 19, 2013
PLANS APPROVAL DATE

REGISTERED PROFESSIONAL ENGINEER
Randell D. Hiatt
No. C50200
Exp. 6-30-15
CIVIL
STATE OF CALIFORNIA

THE STATE OF CALIFORNIA OR ITS OFFICERS OR AGENTS SHALL NOT BE RESPONSIBLE FOR THE ACCURACY OR COMPLETENESS OF SCANNED COPIES OF THIS PLAN SHEET.

TO ACCOMPANY PLANS DATED 2-10-14

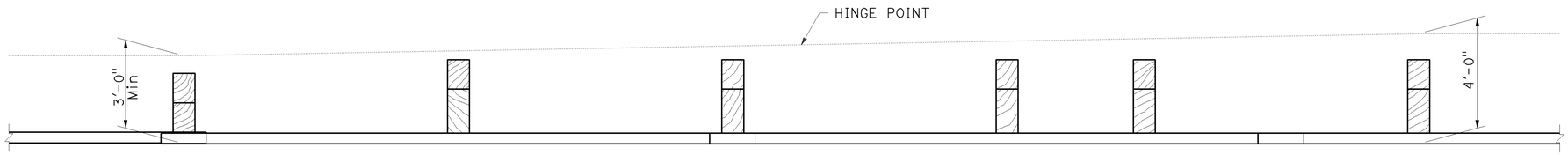

PLAN

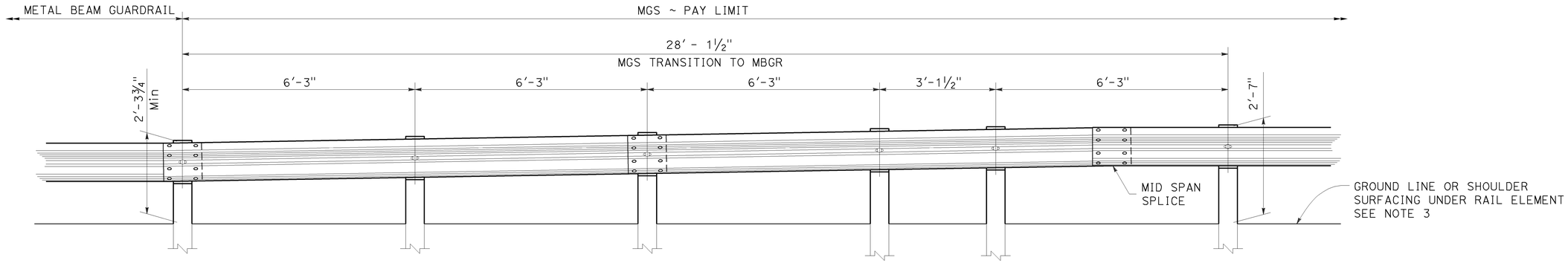

ELEVATION

NOTES:

1. Refer to Revised Standard Plans RSP A77L1 and RSP A77L2 for component details for MGS not shown on this plan.
2. All posts for any standard barrier run shall be of the same type: Wood or Steel.
3. Install posts in soil.

STATE OF CALIFORNIA
DEPARTMENT OF TRANSPORTATION

MIDWEST GUARDRAIL SYSTEM TRANSITION TO METAL BEAM GUARDRAIL

NO SCALE

RSP A77U5 DATED JULY 19, 2013 SUPPLEMENTS THE STANDARD PLANS BOOK DATED 2010.

REVISED STANDARD PLAN RSP A77U5

2010 REVISED STANDARD PLAN RSP A77U5

6-20-13

Dist	COUNTY	ROUTE	POST MILES TOTAL PROJECT	SHEET No.	TOTAL SHEETS
03	But,Col,Gln, Sut,Yol,Yub	16,32,45 70,113,162	Var	187	195

Randell D. Hiatt
REGISTERED CIVIL ENGINEER

July 19, 2013
PLANS APPROVAL DATE

REGISTERED PROFESSIONAL ENGINEER
Randell D. Hiatt
No. C50200
Exp. 6-30-15
CIVIL
STATE OF CALIFORNIA

THE STATE OF CALIFORNIA OR ITS OFFICERS OR AGENTS SHALL NOT BE RESPONSIBLE FOR THE ACCURACY OR COMPLETENESS OF SCANNED COPIES OF THIS PLAN SHEET.

TO ACCOMPANY PLANS DATED 2-10-14

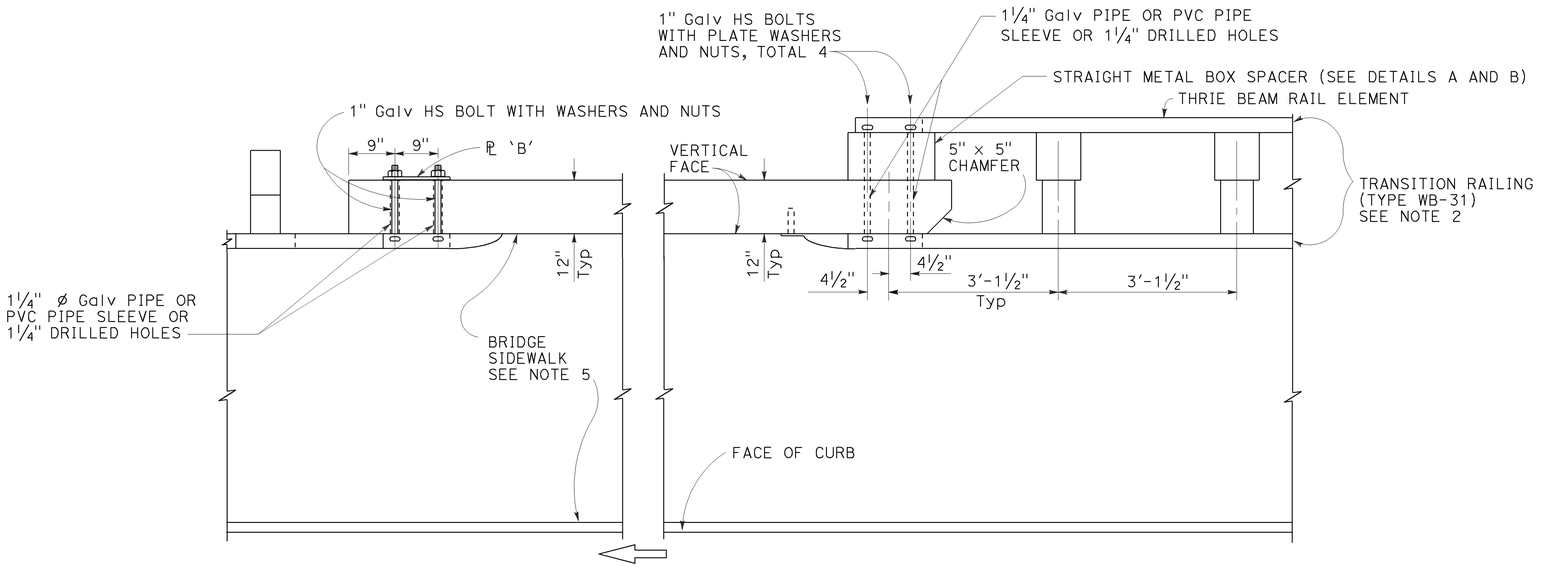

PLAN

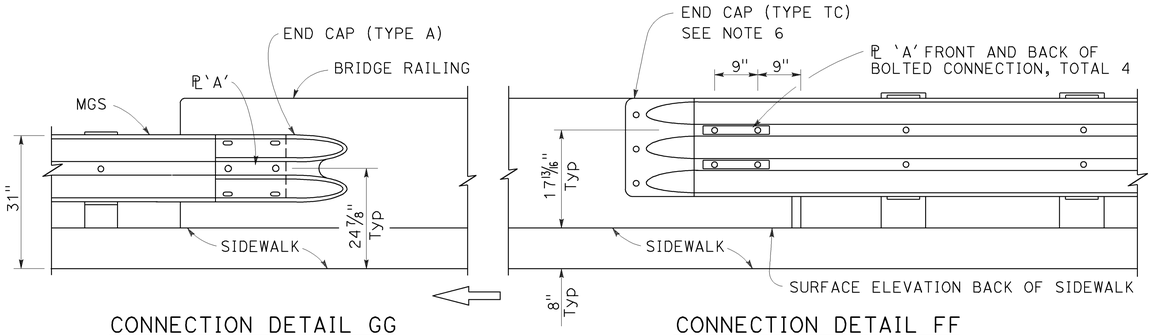

CONNECTION DETAIL GG
See Notes 4

ELEVATION

CONNECTION DETAIL FF
See Notes 3

MIDWEST GUARDRAIL SYSTEM CONNECTION TO BRIDGE RAILING WITH SIDEWALKS

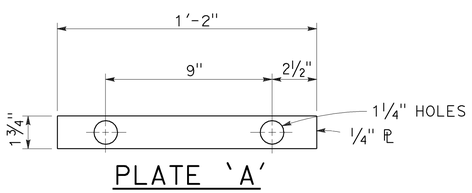

PLATE 'A'

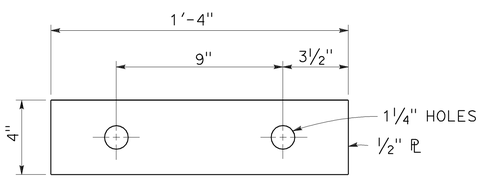

PLATE 'B'
(For backside of connection SB)

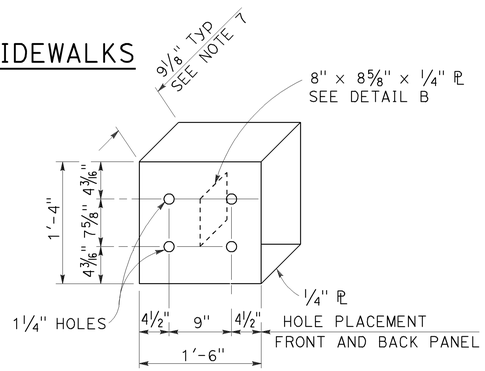

DETAIL A

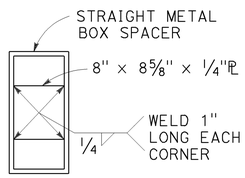

DETAIL B

STRAIGHT METAL BOX SPACER

NOTES:

1. See Revised Standard Plan RSP A77V2 for additional connection details to bridges with sidewalks.
2. For additional details of Transition Railing (Type WB-31), see Revised Standard Plan RSP A77U4. Transition Railing (Type WB-31) transitions the 12 gauge MGS railing section to a heavier gage nested thrie beam railing section which is connected to the concrete bridge railing.
3. For typical use of Connection Detail FF, see Layout Types 12A and 12B on Revised Standard Plan RSP A77Q1.
4. For typical use of Connection Detail GG, see Layout Type 12D on Revised Standard Plan RSP A77Q2 and Layout Type 12DD on Revised Standard Plan RSP A77Q5.
5. Where the bridge sidewalk is not continued beyond the end of the bridge railing, the portion of the sidewalk beyond each end of the bridge railing shall be transitioned down from the top elevation of the sidewalk, for its entire width, to the finished grade of the adjacent roadbed. The longitudinal slope of each sidewalk elevation transition shall not exceed 8.33 percent.
6. For details of End Cap (Type TC), see Revised Standard Plan RSP A77U4.
7. See Revised Standard Plan RSP A77U4 for additional details regarding depth dimension for straight metal box spacer.

STATE OF CALIFORNIA
DEPARTMENT OF TRANSPORTATION

MIDWEST GUARDRAIL SYSTEM CONNECTIONS TO BRIDGE RAILINGS WITH SIDEWALKS DETAILS No. 1

NO SCALE

RSP A77V1 DATED JULY 19, 2013 SUPPLEMENTS THE STANDARD PLANS BOOK DATED 2010.

REVISED STANDARD PLAN RSP A77V1

2010 REVISED STANDARD PLAN RSP A77V1

7-8-13

Dist	COUNTY	ROUTE	POST MILES TOTAL PROJECT	SHEET No.	TOTAL SHEETS
03	But,Col,Gln, Sut,Yol,Yub	16,32,45 70,113,162	Var	188	195

Randell D. Hiatt
REGISTERED CIVIL ENGINEER

July 19, 2013
PLANS APPROVAL DATE

REGISTERED PROFESSIONAL ENGINEER — Randell D. Hiatt No. C50200 Exp. 6-30-15 CIVIL — STATE OF CALIFORNIA

THE STATE OF CALIFORNIA OR ITS OFFICERS OR AGENTS SHALL NOT BE RESPONSIBLE FOR THE ACCURACY OR COMPLETENESS OF SCANNED COPIES OF THIS PLAN SHEET.

TO ACCOMPANY PLANS DATED 2-10-14

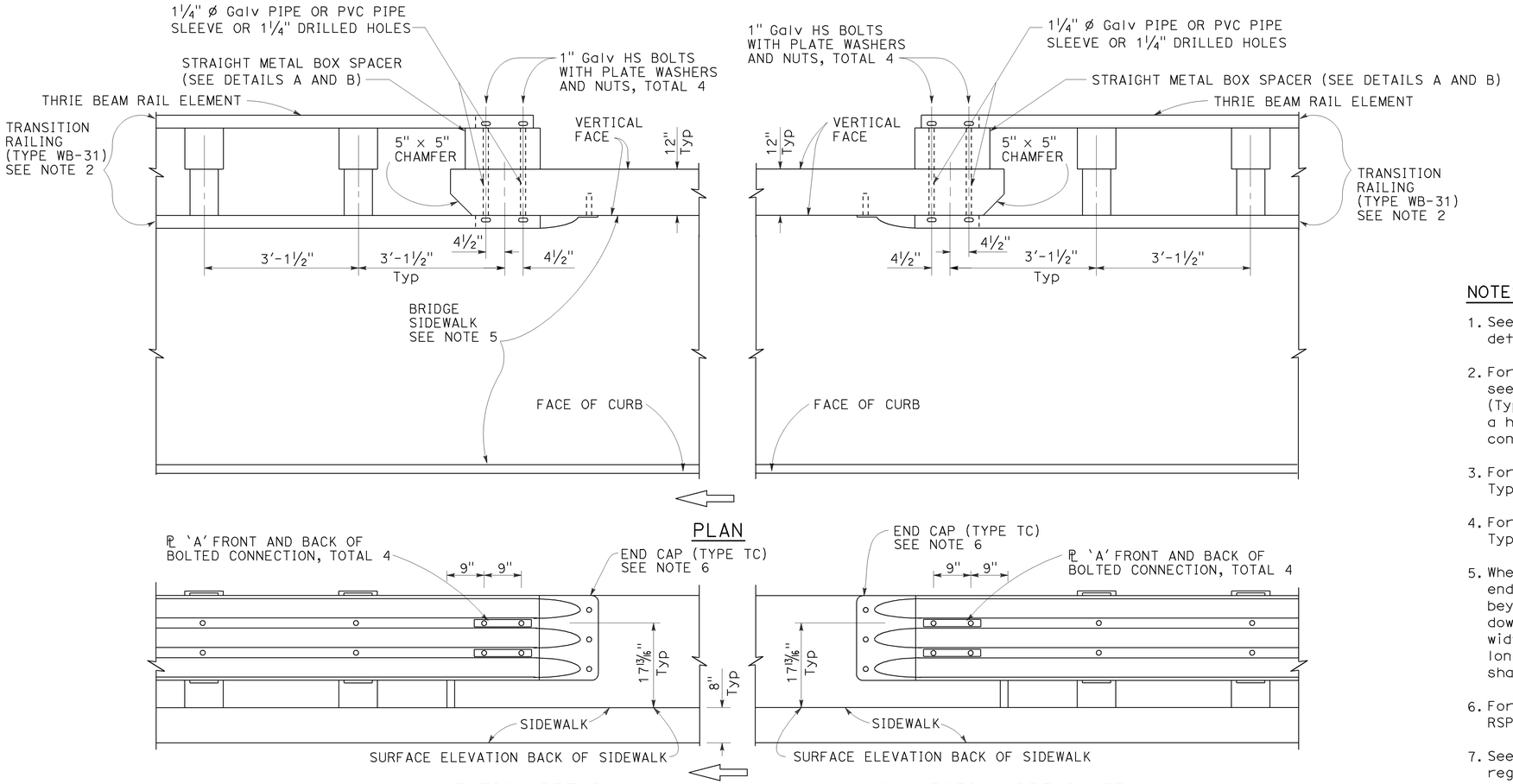

MIDWEST GUARDRAIL SYSTEM CONNECTION TO BRIDGE RAILING WITH SIDEWALKS

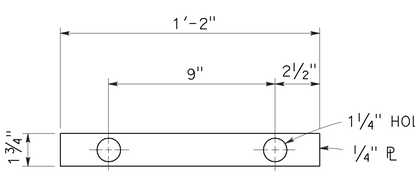

PLATE 'A'

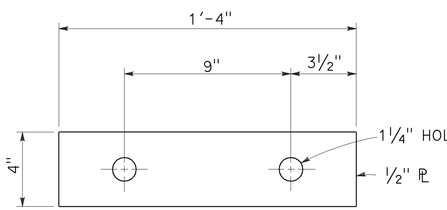

PLATE 'B'
(For backside of connection SB)

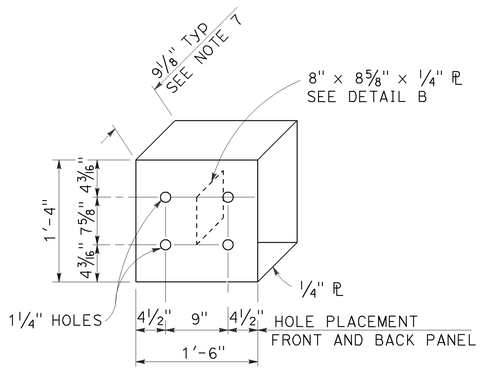

DETAIL A

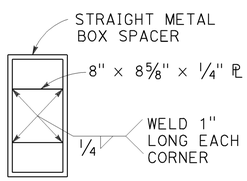

DETAIL B

STRAIGHT METAL BOX SPACER

NOTES:

1. See Revised Standard Plan RSP A77V1 for additional connection details to bridges with sidewalks.
2. For additional details of Transition Railing (Type WB-31), see Revised Standard Plan RSP A77U4. Transition Railing (Type WB-31) transitions the 12 gauge MGS railing section to a heavier gage nested thrie beam railing section which is connected to the concrete bridge railing.
3. For typical use of Connection Detail FF, see Layout Types 12A and 12B on Revised Standard Plan RSP A77Q1.
4. For typical use of Connection Detail HH, see Layout Types 12AA and 12BB on Revised Standard Plan RSP A77Q4.
5. Where the bridge sidewalk is not continued beyond the end of the bridge railing, the portion of the sidewalk beyond each end of the bridge railing shall be transitioned down from the top elevation of the sidewalk, for its entire width, to the finished grade of the adjacent roadbed. The longitudinal slope of each sidewalk elevation transition shall not exceed 8.33 percent.
6. For details of End Cap (Type TC), see Revised Standard Plan RSP A77U4.
7. See Revised Standard Plan RSP A77U4 for additional details regarding depth dimension for straight metal box spacer.

STATE OF CALIFORNIA
DEPARTMENT OF TRANSPORTATION

MIDWEST GUARDRAIL SYSTEM CONNECTIONS TO BRIDGE RAILINGS WITH SIDEWALKS DETAILS No. 2

NO SCALE

RSP A77V2 DATED JULY 19, 2013 SUPPLEMENTS THE STANDARD PLANS BOOK DATED 2010.

REVISED STANDARD PLAN RSP A77V2

2010 REVISED STANDARD PLAN RSP A77V2

6-20-13

Dist	COUNTY	ROUTE	POST MILES TOTAL PROJECT	SHEET No.	TOTAL SHEETS
03	But,Col,Gln, Sut,Yol,Yub	16,32,45 70,113,162	Var	189	195

Randell D. Hiatt
REGISTERED CIVIL ENGINEER

July 19, 2013
PLANS APPROVAL DATE

REGISTERED PROFESSIONAL ENGINEER — Randell D. Hiatt No. C50200 Exp. 6-30-15 CIVIL — STATE OF CALIFORNIA

THE STATE OF CALIFORNIA OR ITS OFFICERS OR AGENTS SHALL NOT BE RESPONSIBLE FOR THE ACCURACY OR COMPLETENESS OF SCANNED COPIES OF THIS PLAN SHEET.

TO ACCOMPANY PLANS DATED 2-10-14

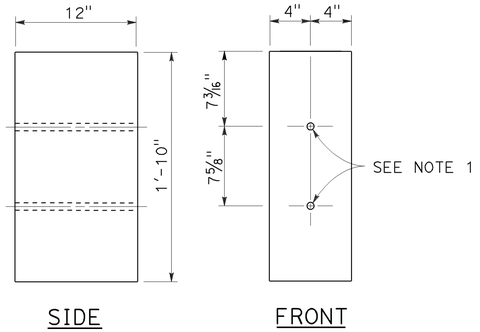

8" x 12"
WOOD BLOCK

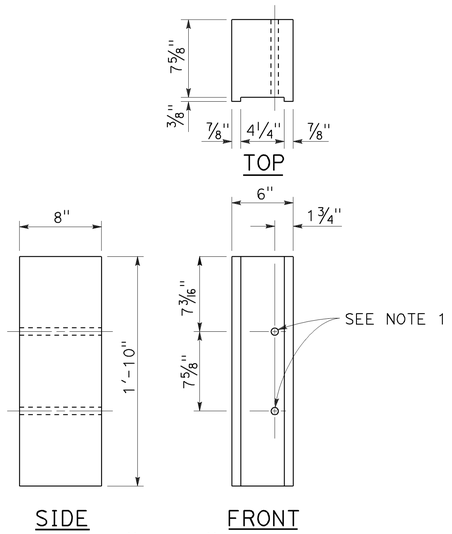

6" x 8"
NOTCHED WOOD BLOCK
See Notes 3 and 5

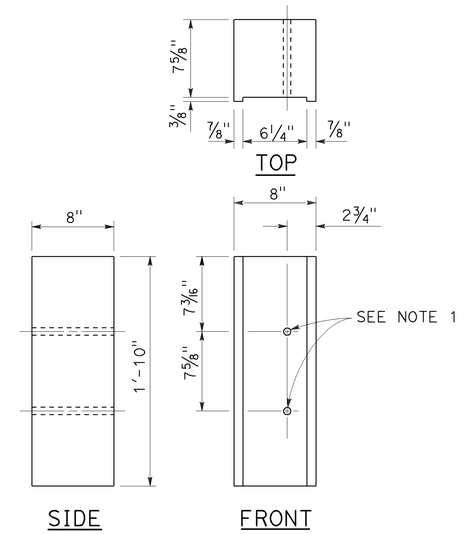

8" x 8"
NOTCHED WOOD BLOCK
See Notes 4 and 5

NOTES:

1. All holes in steel post to be 13/16" Dia maximum. Holes in wood posts and wood blocks to be 3/4" Dia ±1/16".
2. Dimensions shown for wood post are nominal.
3. For use with W6 x 8.5 or W6 x 9 steel post.
4. For use with W6 x 15 steel post.
5. Notched face of block faces steel post.

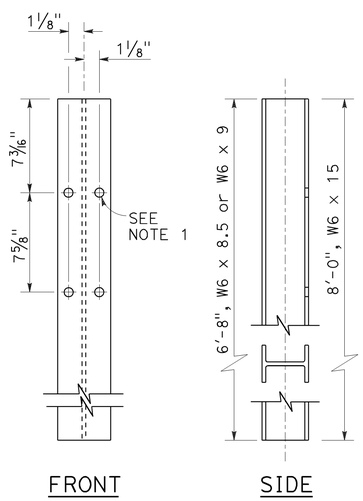

STEEL POST
W6 x 9 or W6 x 8.5 and W6 x 15

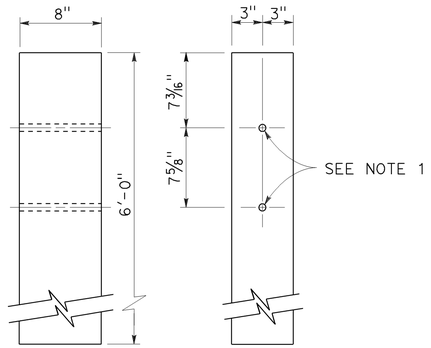

6" x 8"
WOOD POST

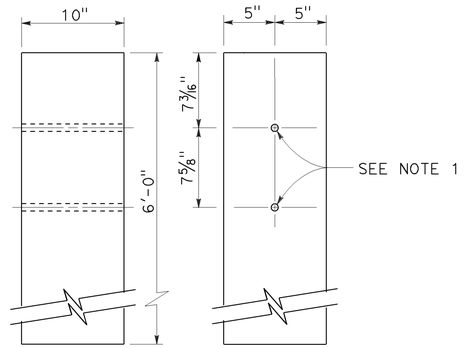

10" x 10"
WOOD POST

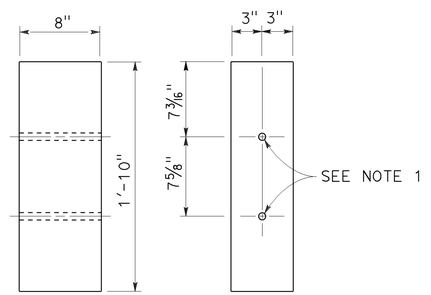

6" x 8"
WOOD BLOCK

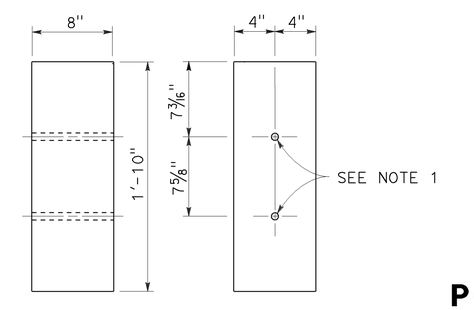

8" x 8"
WOOD BLOCK

STATE OF CALIFORNIA
DEPARTMENT OF TRANSPORTATION

THRIE BEAM BARRIER POST AND BLOCK DETAILS

NO SCALE

RSP A78C2 DATED JULY 19, 2013 SUPERSEDES STANDARD PLAN A78C2 DATED MAY 20, 2011 - PAGE 92 OF THE STANDARD PLANS BOOK DATED 2010.

REVISED STANDARD PLAN RSP A78C2

2010 REVISED STANDARD PLAN RSP A78C2

7-3-13

Dist	COUNTY	ROUTE	POST MILES TOTAL PROJECT	SHEET No.	TOTAL SHEETS
03	But,Col,Gln, Sut,Yol,Yub	16,32,45 70,113,162	Var	190	195

REGISTERED CIVIL ENGINEER

Michael Janzen
No. 44788
Exp. 03-31-14
CIVIL
REGISTERED PROFESSIONAL ENGINEER
STATE OF CALIFORNIA

July 19, 2013
PLANS APPROVAL DATE

THE STATE OF CALIFORNIA OR ITS OFFICERS OR AGENTS SHALL NOT BE RESPONSIBLE FOR THE ACCURACY OR COMPLETENESS OF SCANNED COPIES OF THIS PLAN SHEET.

TO ACCOMPANY PLANS DATED 2-10-14

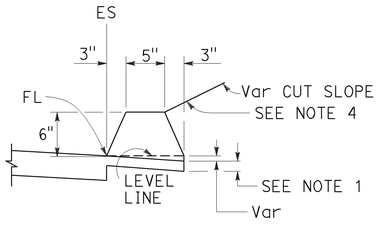

TYPE A
See Note 3

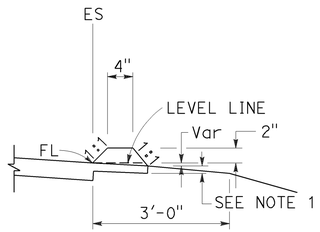

TYPE C

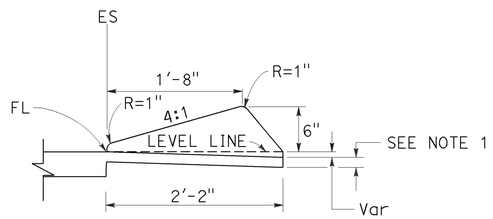

TYPE D

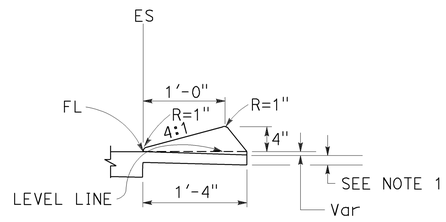

TYPE E

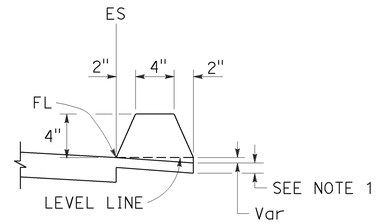

TYPE F
See Note 5

DIKES

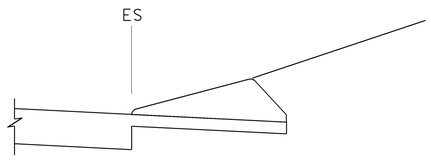

CASE C-1
Cut Slope

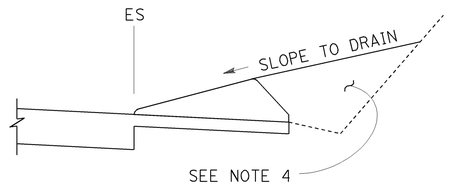

CASE C-2
Cut Slope

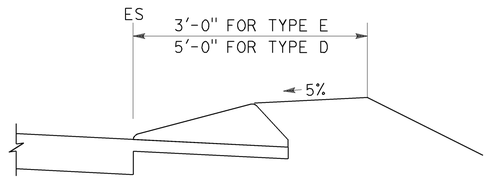

CASE F

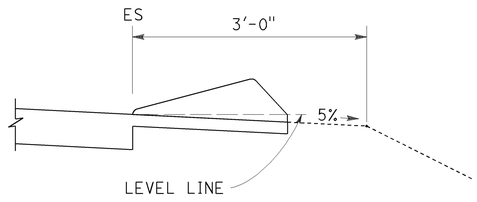

CASE R
See Note 2

TYPE D AND E BACKFILL DETAILS

NOTES:

1. For HMA shoulders only, extend top layer of HMA placed on the shoulder under dike with no joint at the ES. For projects with OGFC shoulders, do not extend OGFC under dike. See project plans for modified dike detail.
2. Case R applies to retrofit only projects where restrictive conditions do not provide enough width for Case F backfill.
3. Type A dike only to be used where restrictive slope conditions do not provide enough width to use Type D or Type E dike.
4. Fill and compact with excavated material to top of dike.
5. Use Type F dike, where dike is required with guard railing installations. See Revised Standard Plan RSP A77N4 for dike positioning details.

DIKE QUANTITIES

TYPE	CUBIC YARDS PER LINEAR FOOT
A	0.0135
C	0.0038
D	0.0293
E	0.0130
F	0.0066

Quantities based on 5% cross slope.

STATE OF CALIFORNIA
DEPARTMENT OF TRANSPORTATION

HOT MIX ASPHALT DIKES

NO SCALE

RSP A87B DATED JULY 19, 2013 SUPERSEDES STANDARD PLAN A87B
DATED MAY 20, 2011 - PAGE 120 OF THE STANDARD PLANS BOOK DATED 2010.

REVISED STANDARD PLAN RSP A87B

2010 REVISED STANDARD PLAN RSP A87B

6-27-13

Dist	COUNTY	ROUTE	POST MILES TOTAL PROJECT	SHEET No.	TOTAL SHEETS
03	But,Col,Gln, Sut,Yol,Yub	16,32,45 70,113,162	Var	191	195

REGISTERED CIVIL ENGINEER

July 19, 2013
PLANS APPROVAL DATE

REGISTERED PROFESSIONAL ENGINEER
Gurinderpal Bhullar
No. C48815
Exp. 9-30-14
CIVIL
STATE OF CALIFORNIA

THE STATE OF CALIFORNIA OR ITS OFFICERS OR AGENTS SHALL NOT BE RESPONSIBLE FOR THE ACCURACY OR COMPLETENESS OF SCANNED COPIES OF THIS PLAN SHEET.

TO ACCOMPANY PLANS DATED 2-10-14

2010 REVISED STANDARD PLAN RSP T9

TABLE 1

TAPER LENGTH CRITERIA AND CHANNELIZING DEVICE SPACING

SPEED (S)	MINIMUM TAPER LENGTH * FOR WIDTH OF OFFSET 12 FEET (W)				MAXIMUM CHANNELIZING DEVICE SPACING		
					X	Y	Z **
	TANGENT 2L	MERGING L	SHIFTING L/2	SHOULDER L/3	TAPER	TANGENT	CONFLICT
mph	ft	ft	ft	ft	ft	ft	ft
20	160	80	40	27	20	40	10
25	250	125	63	42	25	50	12
30	360	180	90	60	30	60	15
35	490	245	123	82	35	70	17
40	640	320	160	107	40	80	20
45	1080	540	270	180	45	90	22
50	1200	600	300	200	50	100	25
55	1320	660	330	220	55	110	27
60	1440	720	360	240	60	120	30
65	1560	780	390	260	65	130	32
70	1680	840	420	280	70	140	35

* - For other offsets, use the following merging taper length formula for L:
For speed of 40 mph or less, $L = WS^2/60$
For speed of 45 mph or more, $L = WS$

Where: L = Taper length in feet
W = Width of offset in feet
S = Posted speed limit, off-peak 85th-percentile speed prior to work starting, or the anticipated operating speed in mph

** - Use for taper and tangent sections where there are no pavement markings or where there is a conflict between existing pavement markings and channelizers (CA).

TABLE 2

LONGITUDINAL BUFFER SPACE AND FLAGGER STATION SPACING

SPEED *	Min D **	DOWNGRADE Min D ***		
		-3%	-6%	-9%
mph	ft	ft	ft	ft
20	115	116	120	126
25	155	158	165	173
30	200	205	215	227
35	250	257	271	287
40	305	315	333	354
45	360	378	400	427
50	425	446	474	507
55	495	520	553	593
60	570	598	638	686
65	645	682	728	785
70	730	771	825	891

* - Speed is posted speed limit, off-peak 85th-percentile speed prior to work starting, or the anticipated operating speed in mph

** - Longitudinal buffer space or flagger station spacing

*** - Use on sustained downgrade steeper than -3 percent and longer than 1 mile.

TABLE 3

ADVANCE WARNING SIGN SPACING

ROAD TYPE	DISTANCE BETWEEN SIGNS *		
	A	B	C
	ft	ft	ft
URBAN - 25 mph OR LESS	100	100	100
URBAN - MORE THAN 25 mph TO 40 mph	250	250	250
URBAN - MORE THAN 40 mph	350	350	350
RURAL	500	500	500
EXPRESSWAY / FREEWAY	1000	1500	2640

* - The distances are approximate, are intended for guidance purposes only, and should be applied with engineering judgment. These distances should be adjusted by the Engineer for field conditions, if necessary, by increasing or decreasing the recommmended distances.

STATE OF CALIFORNIA
DEPARTMENT OF TRANSPORTATION

TRAFFIC CONTROL SYSTEM TABLES FOR LANE AND RAMP CLOSURES

NO SCALE

RSP T9 DATED JULY 19, 2013 SUPERSEDES RSP T9 DATED APRIL 19, 2013 THAT SUPPLEMENTS THE STANDARD PLANS BOOK DATED 2010.

REVISED STANDARD PLAN RSP T9

4-30-13

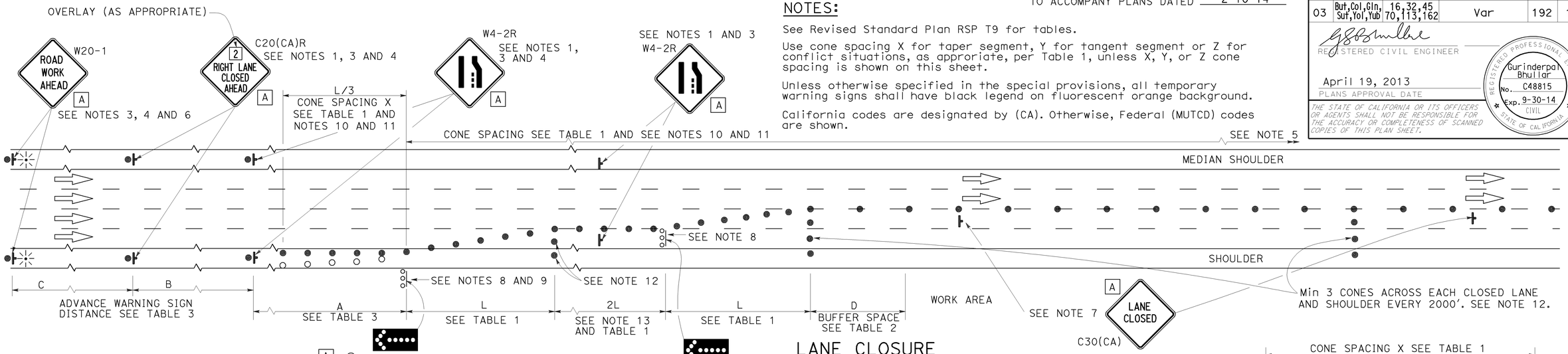

NOTES:

See Revised Standard Plan RSP T9 for tables.

Use cone spacing X for taper segment, Y for tangent segment or Z for conflict situations, as approriate, per Table 1, unless X, Y, or Z cone spacing is shown on this sheet.

Unless otherwise specified in the special provisions, all temporary warning signs shall have black legend on fluorescent orange background.

California codes are designated by (CA). Otherwise, Federal (MUTCD) codes are shown.

TO ACCOMPANY PLANS DATED 2-10-14

Dist	COUNTY	ROUTE	POST MILES TOTAL PROJECT	SHEET No.	TOTAL SHEETS
03	But,Col,Gln, Sut,Yol,Yub	16,32,45 70,113,162	Var	192	195

REGISTERED CIVIL ENGINEER

April 19, 2013
PLANS APPROVAL DATE

REGISTERED PROFESSIONAL ENGINEER
Gurinderpa Bhullar
No. C48815
Exp. 9-30-14
CIVIL
STATE OF CALIFORNIA

THE STATE OF CALIFORNIA OR ITS OFFICERS OR AGENTS SHALL NOT BE RESPONSIBLE FOR THE ACCURACY OR COMPLETENESS OF SCANNED COPIES OF THIS PLAN SHEET.

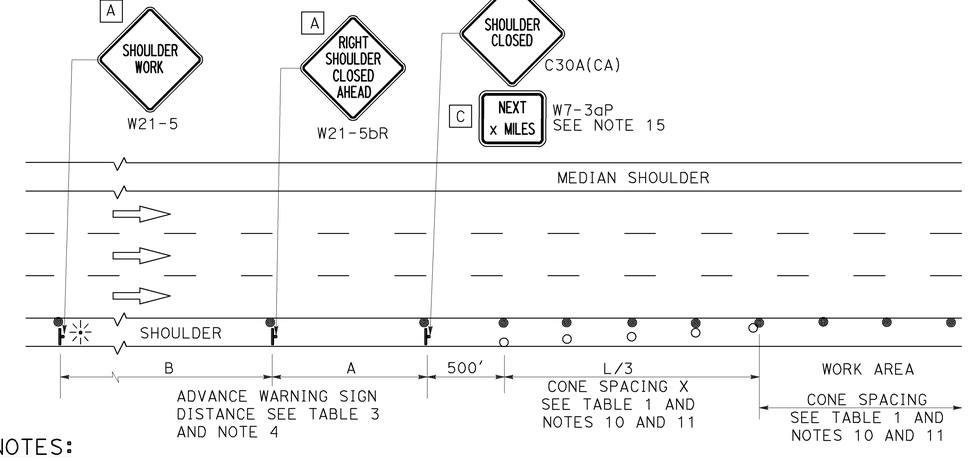

SHOULDER CLOSURE

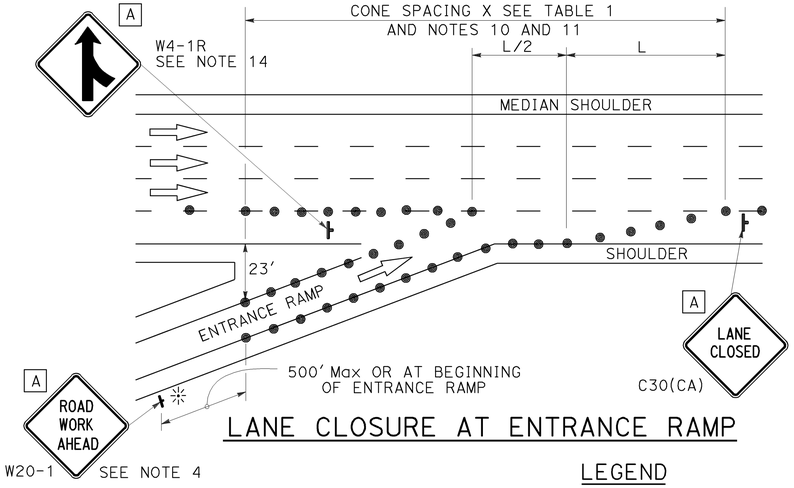

LANE CLOSURE AT ENTRANCE RAMP

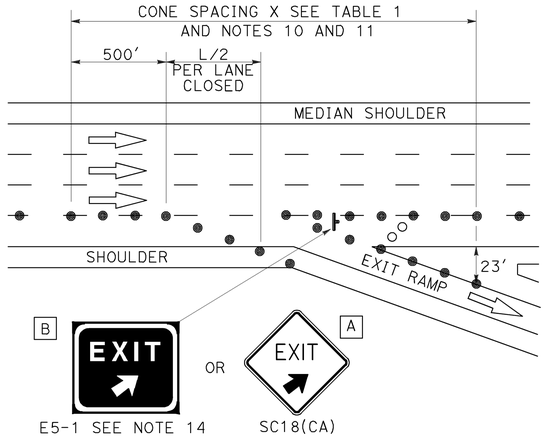

LANE CLOSURE AT EXIT RAMP

NOTES:

1. Median lane closures shall conform to the details as shown except that C20(CA)L and W4-2L signs shall be used.
2. At least one person shall be assigned to provide full time maintenance of traffic control devices for lane closures.
3. Duplicate sign installations are not required:
   a) On opposite shoulder if at least one-half of the available lanes remain open to traffic.
   b) In the median if the width of the median shoulder is less than 8' and the outside lanes are to be closed.
4. Each advance warning sign on each side of the roadway shall be equipped with at least two flags for daytime closure. Each flag shall be at least 16" x 16" in size and shall be orange or fluorescent red-orange in color. Flashing beacons shall be placed at the locations indicated for lane closure during hours of darkness.
5. A G20-2 "END ROAD WORK" sign, with minimum size of 48" x 24" as appropriate, shall be placed at the end of the lane closure unless the end of work area is obvious or ends within a larger project's limits.
6. If the W20-1 sign would follow within 2000' of a stationary W20-1 or G20-1 "ROAD WORK NEXT _____ MILES", use a C20(CA) sign for the first advance warning sign.
7. Place a C30(CA) sign every 2000' throughout length of lane closure.
8. One flashing arrow sign for each lane closed. The flashing arrow signs shall be Type I.
9. A minimum 1500' of sight distance shall be provided where possible for vehicles approaching the first flashing arrow sign. Lane closures shall not begin at top of crest vertical curve or on a horizontal curve.
10. All cones used for lane closures during the hours of darkness shall be fitted with retroreflective bands (or sleeves) as specified in the specifications.
11. Portable delineators, placed at one-half the spacing indicated for traffic cones may be used instead of cones for daytime closures only.
12. Unless otherwise specified in the special provisions, a minimum of 3 cones shall be placed transversely across each closed lane and shoulder at each location where a taper across a traffic lane ends and every 2000' as shown on the "Lane Closure" detail. Two Type II barricades may be used instead of the 3 cones. The transverse alignment of the cones or barricades on the closed shoulder may be shifted from the transverse alignment to provide access to the work.
13. Unless otherwise specified in the special provisions, the 2L tangent shown along lane lines shall be used between the L tapers required for each closed traffic lane.
14. Unless otherwise specified in the special provisions, the E5-1 or SC18(CA) and W4-1 signs shall be used as shown.
15. A W7-3aP "NEXT___MILES" plaque must be used if theshoulder closure extends beyond the distance that can be perceived by road users.

LEGEND

- TRAFFIC CONE
- TRAFFIC CONE (OPTIONAL TAPER)
- TEMPORARY TRAFFIC CONTROL SIGN
- FLASHING ARROW SIGN (FAS)
- FAS SUPPORT OR TRAILER
- PORTABLE FLASHING BEACON

SIGN PANEL SIZE (Min)

A	48" x 48"
B	72" x 60"
C	36" x 30"

STATE OF CALIFORNIA
DEPARTMENT OF TRANSPORTATION

TRAFFIC CONTROL SYSTEM FOR LANE CLOSURE ON FREEWAYS AND EXPRESSWAYS

NO SCALE

RSP T10 DATED APRIL 19, 2013 SUPERSEDES STANDARD PLAN T10 DATED MAY 20, 2011 - PAGE 237 OF THE STANDARD PLANS BOOK DATED 2010.

REVISED STANDARD PLAN RSP T10

2010 REVISED STANDARD PLAN RSP T10

12-18-12

TO ACCOMPANY PLANS DATED 2-10-14

Dist	COUNTY	ROUTE	POST MILES TOTAL PROJECT	SHEET No.	TOTAL SHEETS
03	But,Col,Gln, Sut,Yol,Yub	16,32,45 70,113,162	Var	193	195

REGISTERED CIVIL ENGINEER

April 19, 2013
PLANS APPROVAL DATE

REGISTERED PROFESSIONAL ENGINEER — Gurinderpa Bhullar — No. C48815 — Exp. 9-30-14 CIVIL — STATE OF CALIFORNIA

THE STATE OF CALIFORNIA OR ITS OFFICERS OR AGENTS SHALL NOT BE RESPONSIBLE FOR THE ACCURACY OR COMPLETENESS OF SCANNED COPIES OF THIS PLAN SHEET.

NOTES: See Revised Standard Plan RSP T9 for tables.

Use cone spacing X for taper segment, Y for tangent segment or Z for conflict situations, as approriate, per Table 1, unless X, Y, or Z cone spacing is shown on this sheet.

Unless otherwise specified in the special provisions, all temporary warning signs shall have black legend on fluorescent orange background.

California codes are designated by (CA). Otherwise, Federal (MUTCD) codes are shown.

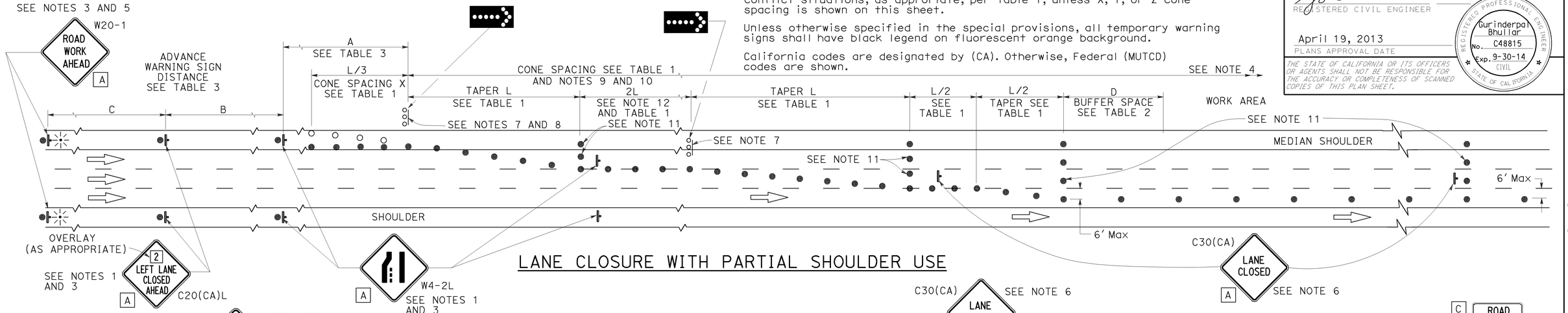

LANE CLOSURE WITH PARTIAL SHOULDER USE

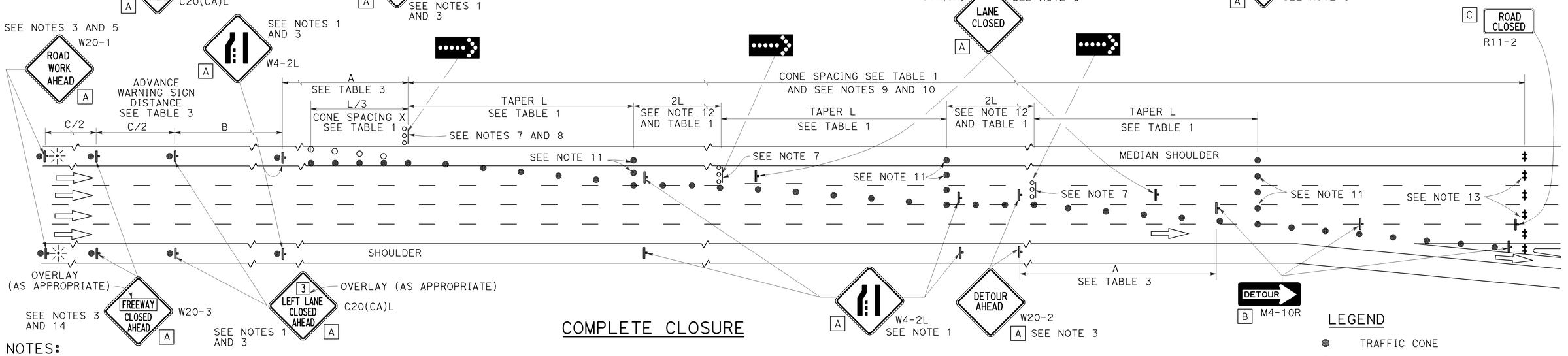

COMPLETE CLOSURE

NOTES:

1. Lane closures on the right side using partial median shoulder as a traffic lane shall conform to the details as shown except that C20(CA)R and W4-2R signs shall be used.
2. At least one person shall be assigned to provide full time maintenance of traffic control devices for lane closures.
3. Each advance warning sign on each side of the roadway shall be equipped with at least two flags for daytime closure. Each flag shall be at least 16" X 16" in size and shall be orange or fluorescent red-orange in color. Flashing beacons shall be placed at the locations indicated for lane closure during hours of darkness.
4. A G20-2 "END ROAD WORK" sign, with minimum size of 48" x 24" as appropriate, shall be placed at the end of the lane closure unless the end of work area is obvious or ends within a larger project's limits.
5. If the W20-1 sign would follow within 2000' of a stationary W20-1 or G20-1 "ROAD WORK NEXT ___ MILES", use a C20(CA) sign for the first advance warning sign.
6. Place a C30(CA) sign every 2000' throughout length of lane closure.
7. One flashing arrow sign for each lane closed. The flashing arrow signs shall be Type I.
8. A minimum 1500' of sight distance shall be provided where possible for vehicles approaching the first flashing arrow sign. Lane closures shall not begin at the top of crest vertical curve or on a horizontal curve.
9. All cones used for lane closures during the hours of darkness shall be fitted with retroreflective bands (or sleeves) as specified in the specifications.
10. Portable delineators, placed at one-half the spacing indicated for traffic cones, may be used instead of cones for daytime closures only.
11. Unless otherwise specified in the special provisions, a minimum of 3 cones shall be placed transversely across each closed lane and shoulder at each location where a taper across a traffic lane ends and every 2000' as shown on the "Lane Closure With Partial Shoulder Use" detail. Two Type II barricades may be used instead of the 3 cones. The transverse alignment of the cones or barricades on the closed shoulder may be shifted from the transverse alignment to provide access to the work.
12. Unless otherwise specified in the special provisions, the 2L tangent shown along lane lines shall be used between the L tapers required for each closed traffic lane.
13. A minimum of Two Type II or III barricades shall be placed across each closed lane and shoulder at the location shown and every 2000' within the complete closure area. Within the complete closure area, the transverse alignment of the barricades on the closed shoulder may be shifted from the transverse alignment to provide access to the work.
14. When specified in the special provisions, a W20-2 "DETOUR AHEAD" sign is to be used in place of the W20-3 "FREEWAY CLOSED AHEAD" sign.

SIGN PANEL SIZE (Min)

- A 48" x 48"
- B 48" x 18"
- C 48" x 30"

LEGEND

- TRAFFIC CONE
- TRAFFIC CONE (OPTIONAL TAPER)
- TEMPORARY TRAFFIC CONTROL SIGN
- FLASHING ARROW SIGN (FAS)
- FAS SUPPORT OR TRAILER
- PORTABLE FLASHING BEACON

STATE OF CALIFORNIA
DEPARTMENT OF TRANSPORTATION

TRAFFIC CONTROL SYSTEM FOR LANE CLOSURES ON FREEWAYS AND EXPRESSWAYS

NO SCALE

RSP T10A DATED APRIL 19, 2013 SUPERSEDES STANDARD PLAN T10A DATED MAY 20, 2011 - PAGE 238 OF THE STANDARD PLANS BOOK DATED 2010.

REVISED STANDARD PLAN RSP T10A

2010 REVISED STANDARD PLAN RSP T10A

12-18-12

Dist	COUNTY	ROUTE	POST MILES TOTAL PROJECT	SHEET No.	TOTAL SHEETS
03	But,Col,Gln, Sut,Yol,Yub	16,32,45 70,113,162	Var	194	195

REGISTERED CIVIL ENGINEER

April 19, 2013
PLANS APPROVAL DATE

REGISTERED PROFESSIONAL ENGINEER
Gurinderpa Bhullar
No. C48815
Exp. 9-30-14
CIVIL
STATE OF CALIFORNIA

THE STATE OF CALIFORNIA OR ITS OFFICERS OR AGENTS SHALL NOT BE RESPONSIBLE FOR THE ACCURACY OR COMPLETENESS OF SCANNED COPIES OF THIS PLAN SHEET.

TO ACCOMPANY PLANS DATED 2-10-14

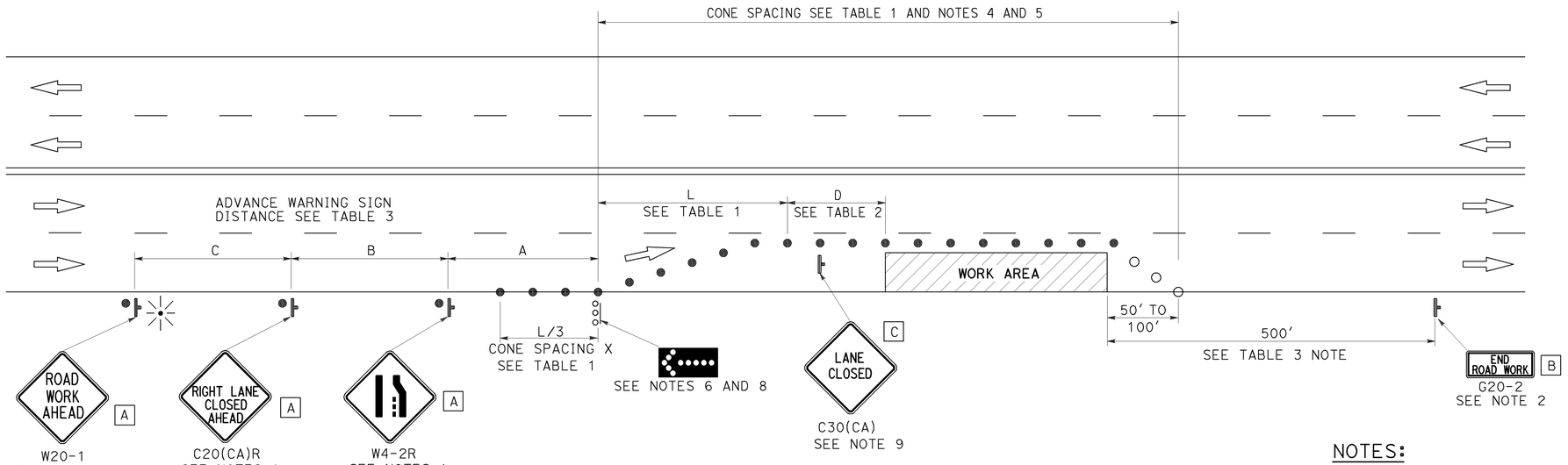

TYPICAL LANE CLOSURE

NOTES:

1. Each advance warning sign shall be equipped with at least two flags for daytime closure. Each flag shall be at least 16" x 16" in size and shall be orange or fluorescent red-orange in color. Flashing beacons shall be placed at the locations indicated for lane closure during hours of darkness.
2. A G20-2 "END ROAD WORK" sign, as appropriate, shall be placed at the end of the lane closure unless the end of work area is obvious, or ends within a larger project's limits.
3. If the W20-1 sign would follow within 2000' of a stationary W20-1 or G20-1 "ROAD WORK NEXT _____ MILES", use a C20(CA) sign for the first advance warning sign.
4. All cones used for lane closures during the hours of darkness shall be fitted with retroreflective bands (or sleeves) as specified in the specifications.
5. Portable delineators, placed at one-half the spacing indicated for traffic cones, may be used instead of cones for daytime closures only.
6. Flashing arrow sign shall be either Type I or Type II.
7. For approach speeds over 50 mph, use the "Traffic Control System for Lane Closure On Freeways And Expressways" plan for lane closure details and requirements.
8. A minimum 1500' of sight distance shall be provided where possible for vehicles approaching the first flashing arrow sign. Lane closures shall not begin at the top of crest vertical curve or on a horizontal curve.
9. Place a C30(CA) sign every 2000' throughout length of lane closure.
10. Median lane closures shall conform to the details as shown except that C20(CA)L and W4-2L signs shall be used.
11. At least one person shall be assigned to provide full time maintenance of traffic control devices for lane closure unless, otherwise directed by the Engineer.

NOTES:

See Revised Standard Plan RSP T9 for tables.

Use cone spacing X for taper segment, Y for tangent segment or Z for conflict situations, as approriate, per Table 1, unless X, Y, or Z cone spacing is shown on this sheet.

Unless otherwise specified in the special provisions, all temporary warning signs shall have black legend on fluorescent orange background.

California codes are designated by (CA). Otherwise, Federal (MUTCD) codes are shown.

LEGEND

- TRAFFIC CONE
- TRAFFIC CONE (OPTIONAL TAPER)
- TEMPORARY TRAFFIC CONTROL SIGN
- FLASHING ARROW SIGN (FAS)
- FAS SUPPORT OR TRAILER
- PORTABLE FLASHING BEACON

SIGN PANEL SIZE (Min)

A	48" x 48"
B	36" x 18"
C	30" x 30"

STATE OF CALIFORNIA
DEPARTMENT OF TRANSPORTATION

TRAFFIC CONTROL SYSTEM FOR LANE CLOSURE ON MULTILANE CONVENTIONAL HIGHWAYS

NO SCALE

RSP T11 DATED APRIL 19, 2013 SUPERSEDES STANDARD PLAN T11 DATED MAY 20, 2011 - PAGE 239 OF THE STANDARD PLANS BOOK DATED 2010.

REVISED STANDARD PLAN RSP T11

2010 REVISED STANDARD PLAN RSP T11

4-2-13

Dist	COUNTY	ROUTE	POST MILES TOTAL PROJECT	SHEET No.	TOTAL SHEETS
03	But,Col,Gln, Sut,Yol,Yub	16,32,45 70,113,162	Var	195	195

REGISTERED CIVIL ENGINEER

April 19, 2013
PLANS APPROVAL DATE

REGISTERED PROFESSIONAL ENGINEER
Gurinderpal Bhullar
No. C48815
Exp. 9-30-14
CIVIL
STATE OF CALIFORNIA

THE STATE OF CALIFORNIA OR ITS OFFICERS OR AGENTS SHALL NOT BE RESPONSIBLE FOR THE ACCURACY OR COMPLETENESS OF SCANNED COPIES OF THIS PLAN SHEET.

TO ACCOMPANY PLANS DATED 2-10-14

NOTES:

See Revised Standard Plan RSP T9 for tables.

Use cone spacing X for taper segment, Y for tangent segment or Z for conflict situations, as approriate, per Table 1, unless X, Y, or Z cone spacing is shown on this sheet.

Unless otherwise specified in the special provisions, all temporary warning signs shall have black legend on fluorescent orange background.

California codes are designated by (CA). Otherwise, Federal (MUTCD) codes are shown.

TYPICAL LANE CLOSURE WITH REVERSIBLE CONTROL

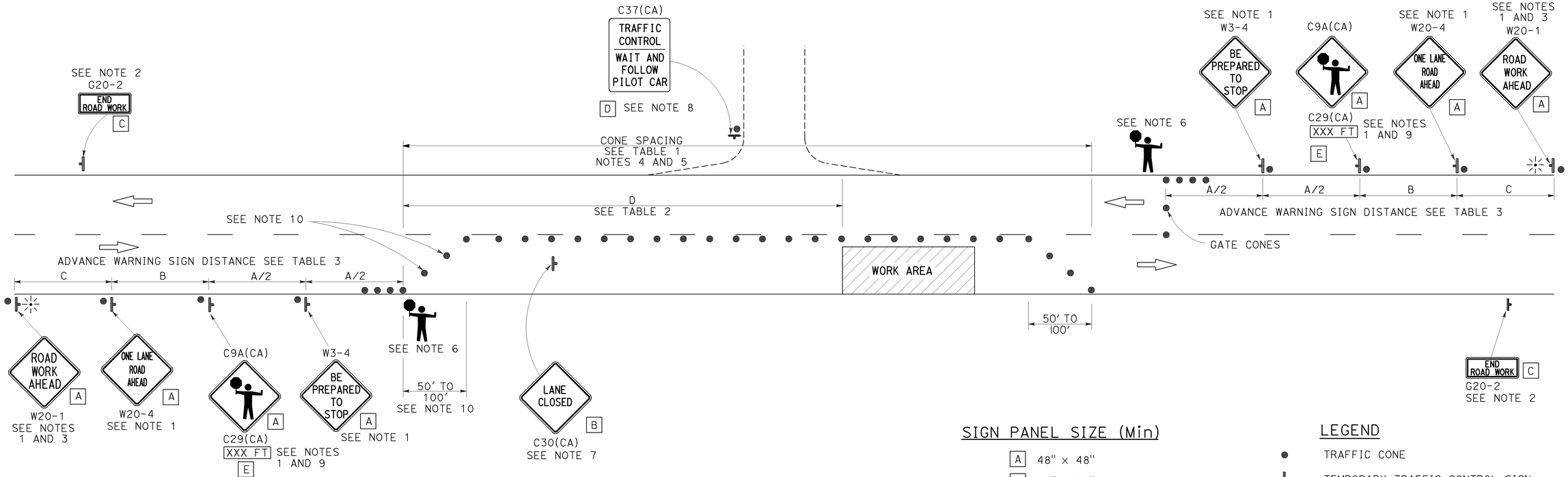

SIGN PANEL SIZE (Min)

A	48" × 48"
B	30" × 30"
C	36" × 18"
D	36" × 42"
E	20" × 7"

LEGEND

- TRAFFIC CONE
- TEMPORARY TRAFFIC CONTROL SIGN
- PORTABLE FLASHING BEACON
- FLAGGER

NOTES:

1. Each advance warning sign in each direction of travel shall be equipped with at least two flags for daytime closure. Each flag shall be at least 16" x 16" in size and shall be orange or fluorescent red-orange in color. Flashing beacons shall be placed at the locations indicated for lane closure during hours of darkness.
2. A G20-2 "END ROAD WORK" sign, as appropriate, shall be placed at the end of the lane control unless the end of work area is obvious, or ends within a larger project's limits.
3. If the W20-1 sign would follow within 2000' of a stationary W20-1 or G20-1 "ROAD WORK NEXT _____ MILES", use a W20-4 sign for the first advance warning sign.
4. All cones used for lane closures during the hours of darkness shall be fitted with retroreflective bands (or sleeves) as specified in the specifications.
5. Portable delineators, placed at one-half the spacing indicated for traffic cones, may be used instead of cones for daytime closures only.
6. Additional advance flaggers may be required. Flagger should stand in a conspicuous place, be visible to approaching traffic as well as approaching vehicles after the first vehicle has stopped. During the hours of darkness, the flagging-station and flagger shall be illuminated and clearly visible to approaching traffic. The illumination footprint of the lighting on the ground shall be at least 20' in diameter. Place a minimum of four cones at 50' intervals in advance of flagger station as shown.
7. Place C30(CA) "LANE CLOSED" sign at 500' to 1000' intervals throughout extended work areas. They are optional if the work area is visible from the flagger station.
8. When a pilot car is used, place a C37(CA) "TRAFFIC CONTROL-WAIT AND FOLLOW PILOT CAR" sign with black legend on white background at all intersections, driveways and alleys without a flagger within traffic control area. Signs shall be clean and visible at all times. Where traffic can not be effectively self-regulated, at least one flagger shall be used at each intersection within traffic control area.
9. An optional C29(CA) sign may be placed below the C9A(CA) sign.
10. Either traffic cones or barricades shall be placed on the taper. Barricades shall be Type I, II, or III.

STATE OF CALIFORNIA
DEPARTMENT OF TRANSPORTATION

TRAFFIC CONTROL SYSTEM FOR LANE CLOSURE ON TWO LANE CONVENTIONAL HIGHWAYS

NO SCALE

RSP T13 DATED APRIL 19, 2013 SUPERSEDES STANDARD PLAN T13 DATED MAY 20, 2011 - PAGE 241 OF THE STANDARD PLANS BOOK DATED 2010.

REVISED STANDARD PLAN RSP T13

2010 REVISED STANDARD PLAN RSP T13

4-2-13