Dist	COUNTY	ROUTE	POST MILES TOTAL PROJECT	SHEET No.	TOTAL SHEETS
03	Yol	5	0.3/R14.0	3	37

REGISTERED CIVIL ENGINEER 6-16-11 DATE

8-15-11
PLANS APPROVAL DATE

REGISTERED PROFESSIONAL ENGINEER JOSE LOPEZ No. 64619 Exp. 6-30-13 CIVIL STATE OF CALIFORNIA

THE STATE OF CALIFORNIA OR ITS OFFICERS OR AGENTS SHALL NOT BE RESPONSIBLE FOR THE ACCURACY OR COMPLETENESS OF SCANNED COPIES OF THIS PLAN SHEET.

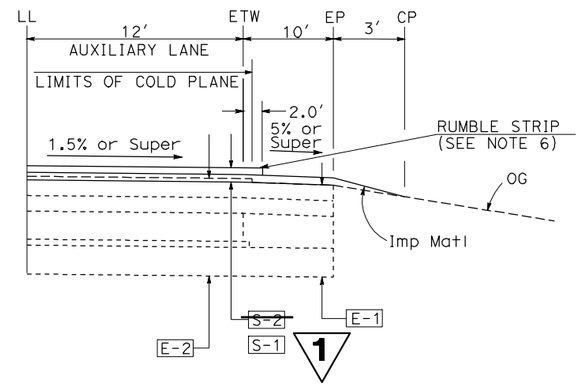

NORTHBOUND
PM 7.5 To 7.9

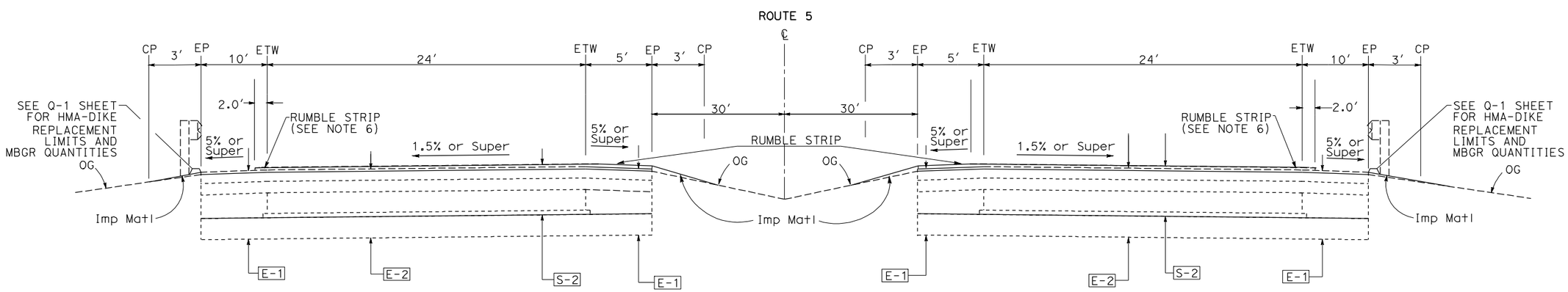

SOUTHBOUND
PM 6.6 To 6.7

ROUTE 5

NORTHBOUND
PM 6.5 To 6.6

STATE OF CALIFORNIA - DEPARTMENT OF TRANSPORTATION
Caltrans® NORTH REGION OFFICE OF ADVANCE PLANNING

FUNCTIONAL SUPERVISOR: NESAR FORMOLI

CALCULATED-DESIGNED BY: J. LOPEZ
CHECKED BY: J. LOPEZ

REVISED BY / DATE REVISED

1 **REVISED PER ADDENDUM No. 1 DATED NOVEMBER 2, 2011**

TYPICAL CROSS SECTIONS

NO SCALE

X-2

LAST REVISION 00-00-00 | DATE PLOTTED => 02-NOV-2011 | TIME PLOTTED => 08:09