Dist	COUNTY	ROUTE	POST MILES TOTAL PROJECT	SHEET No.	TOTAL SHEETS
03	Sac	80,244	12.5/18.0 0.0/1.1	1	32

INDEX OF PLANS

SHEET No.	DESCRIPTION
1	TITLE AND LOCATION MAP
2-3	TYPICAL CROSS SECTIONS
4-9	CONSTRUCTION DETAILS
10-11	CONSTRUCTION AREA SIGNS
11A-11O	DETOUR PLANS
12	PAVEMENT DELINEATION QUANTITIES
13-14	SUMMARY OF QUANTITIES
15-22	ELECTRICAL PLANS
23-32	REVISED STANDARD PLANS

4

THE STANDARD PLANS LIST APPLICABLE TO THIS CONTRACT IS INCLUDED IN THE NOTICE TO BIDDERS AND SPECIAL PROVISIONS BOOK.

STATE OF CALIFORNIA

DEPARTMENT OF TRANSPORTATION

IM-0803(241)E

PROJECT PLANS FOR CONSTRUCTION ON

STATE HIGHWAY

IN SACRAMENTO COUNTY IN AND NEAR CITRUS HEIGHTS ON ROUTE 80 BETWEEN MADISON AVENUE OVERCROSSING AND 0.3 MILES WEST OF SOUTH ROSEVILLE OVERCROSSING AND ON ROUTE 244 BETWEEN WATT AVENUE OVERCROSSING AND AUBURN BOULEVARD

TO BE SUPPLEMENTED BY STANDARD PLANS DATED MAY 2006

LOCATION MAP

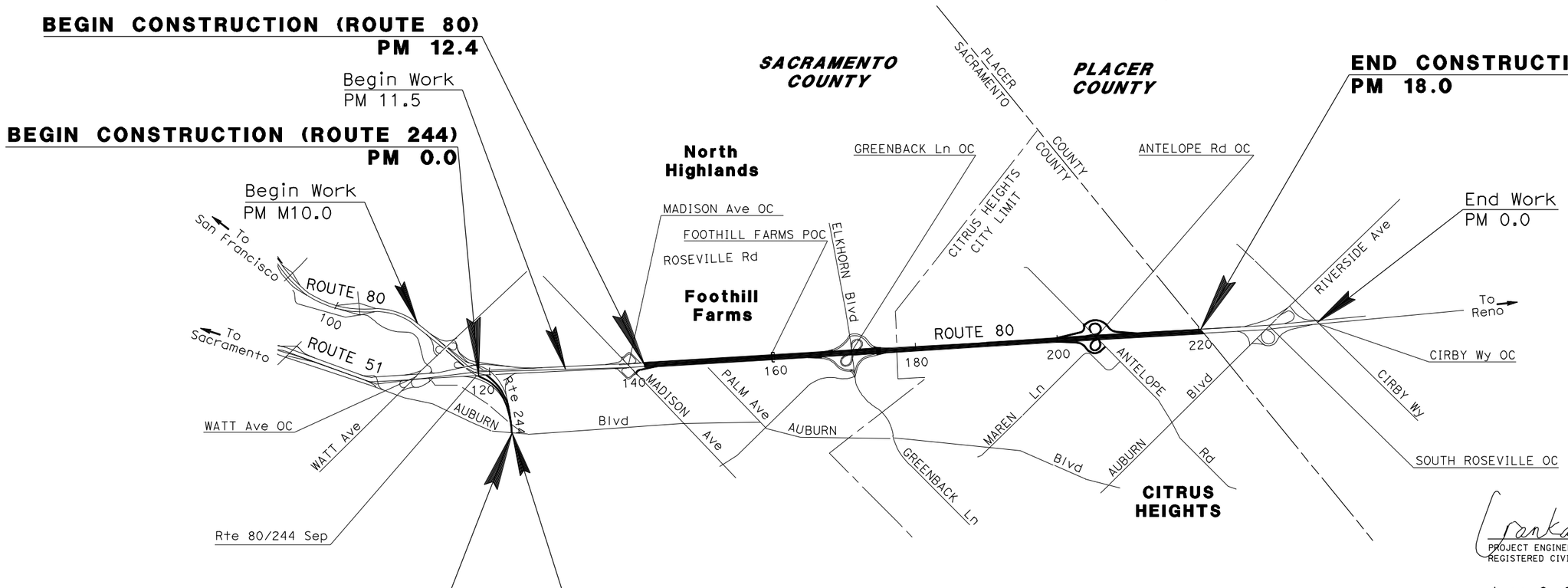

4 ADDED PER ADDENDUM No. 4 DATED NOVEMBER 16, 2011

NO SCALE

THE CONTRACTOR SHALL POSSESS THE CLASS (OR CLASSES) OF LICENSE AS SPECIFIED IN THE "NOTICE TO BIDDERS."

PROJECT MANAGER: SUKHWIDNER BAJWA

DESIGN ENGINEER: LAURIE LAMMERT

PROJECT ENGINEER / REGISTERED CIVIL ENGINEER — DATE: 6-6-11

REGISTERED PROFESSIONAL ENGINEER — AI K. TRAN — No. 64269 — Exp. 6-30-13 — CIVIL — STATE OF CALIFORNIA

June 6, 2011
PLANS APPROVAL DATE

THE STATE OF CALIFORNIA OR ITS OFFICERS OR AGENTS SHALL NOT BE RESPONSIBLE FOR THE ACCURACY OR COMPLETENESS OF SCANNED COPIES OF THIS PLAN SHEET.

CONTRACT No.	03-2F0404
PROJECT ID	0300020451

DATE PLOTTED => 15-NOV-2011
TIME PLOTTED => 14:23

LAST REVISION 00-00-00

BORdER LAST REVISED 7/2/2010 | CALTRANS WEB SITE IS: HTTP//WWW.DOT.CA.GOV/ | RELATIVE BORdER SCALE IS IN INCHES 0 1 2 3 | USERNAME => s134507 DGN FILE => 0300020451ab001.dgn | UNIT 0399 | PROJECT NUMBER & PHASE 03000204511

Dist	COUNTY	ROUTE	POST MILES TOTAL PROJECT	SHEET No.	TOTAL SHEETS
03	Sac	80,244	12.5/18.0 0.0/1.1	3	32

REGISTERED CIVIL ENGINEER — 6-6-11 DATE

6-6-11
PLANS APPROVAL DATE

REGISTERED PROFESSIONAL ENGINEER — AI K. TRAN No. 64269 Exp. 6-30-13 CIVIL — STATE OF CALIFORNIA

THE STATE OF CALIFORNIA OR ITS OFFICERS OR AGENTS SHALL NOT BE RESPONSIBLE FOR THE ACCURACY OR COMPLETENESS OF SCANNED COPIES OF THIS PLAN SHEET.

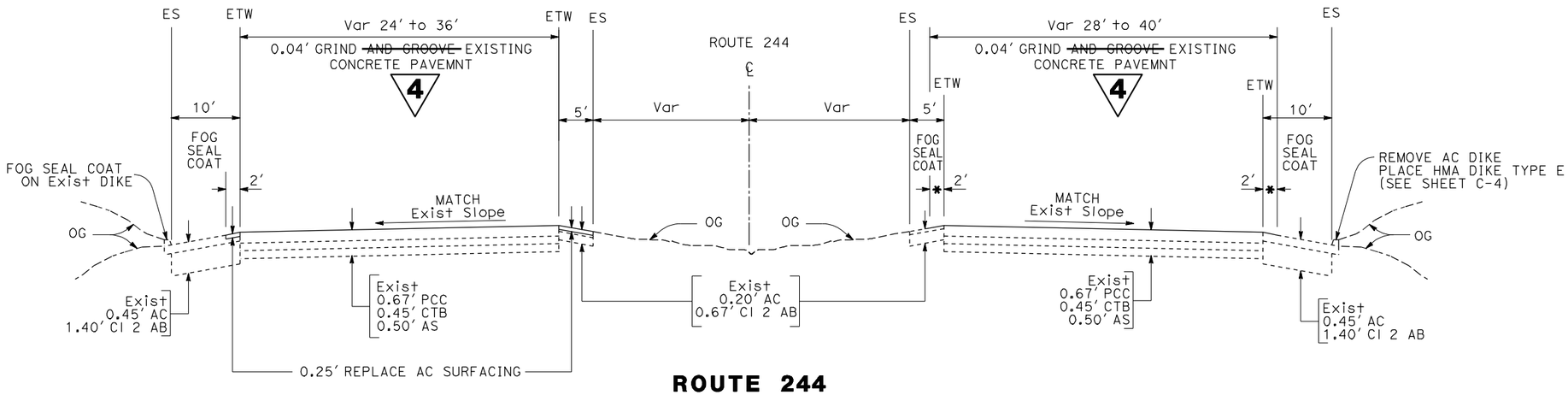

ROUTE 244
PM 0.0 TO 1.08

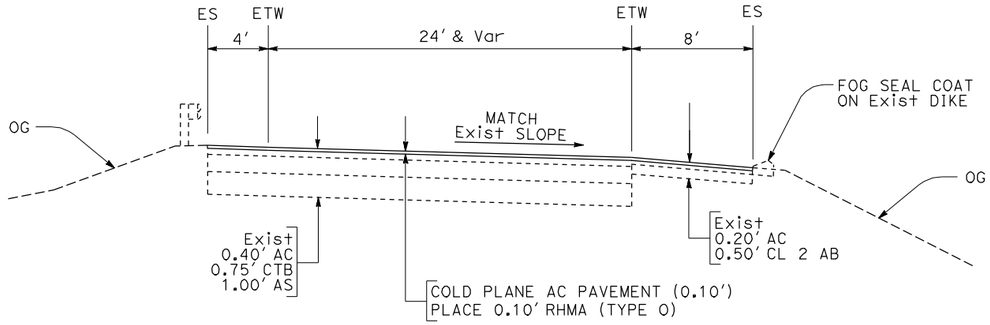

ANTELOPE ROAD WESTBOUND ON RAMP
ANTELOPE ROAD WESTBOUND LOOP ON RAMP

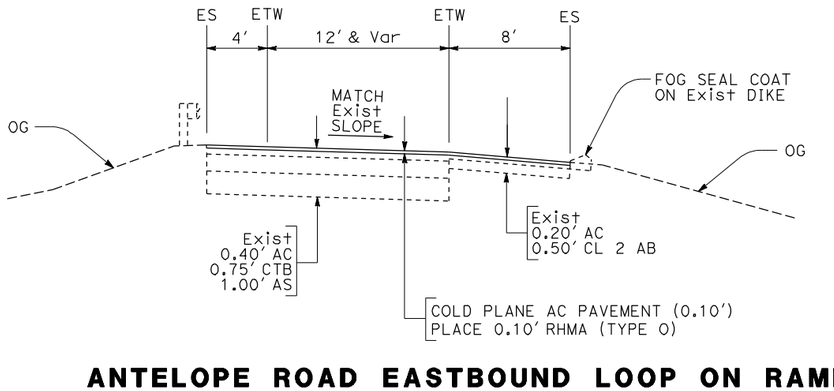

ANTELOPE ROAD EASTBOUND LOOP ON RAMP

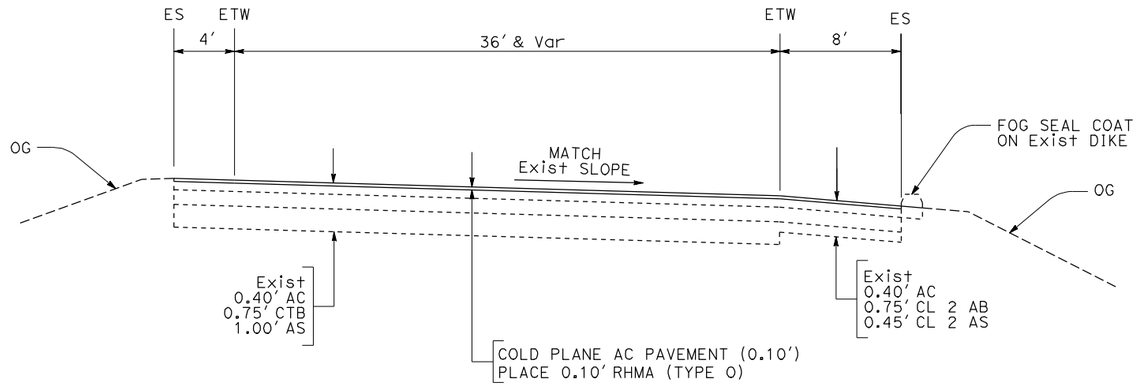

ANTELOPE ROAD EASTBOUND OFF RAMP
ANTELOPE ROAD WESTBOUND OFF RAMP

4 ADDED PER ADDENDUM No. 4 DATED NOVEMBER 16, 2011

TYPICAL CROSS SECTIONS
NO SCALE

X-2

REVISED BY | DATE REVISED
AI K. TRAN | 00-00-00

CALCULATED-DESIGNED BY | CHECKED BY

FUNCTIONAL SUPERVISOR: LAURIE LAMMERT

STATE OF CALIFORNIA - DEPARTMENT OF TRANSPORTATION
Caltrans® TRAFFIC DESIGN

LAST REVISION 00-00-00 | DATE PLOTTED => 15-NOV-2011 | TIME PLOTTED => 14:23

BORDER LAST REVISED 7/2/2010 | USERNAME => s134507 | DGN FILE => 0300020451ca002.dgn | RELATIVE BORDER SCALE IS IN INCHES 0 1 2 3 | UNIT 0399 | PROJECT NUMBER & PHASE 03000204511

Dist	COUNTY	ROUTE	POST MILES TOTAL PROJECT	SHEET No.	TOTAL SHEETS
03	Sac	80,244	12.5/18.0 0.0/1.1	4	32

REGISTERED CIVIL ENGINEER 6-6-11 DATE

6-6-11
PLANS APPROVAL DATE

REGISTERED PROFESSIONAL ENGINEER AI K. TRAN No. 64269 Exp. 6-30-13 CIVIL STATE OF CALIFORNIA

THE STATE OF CALIFORNIA OR ITS OFFICERS OR AGENTS SHALL NOT BE RESPONSIBLE FOR THE ACCURACY OR COMPLETENESS OF SCANNED COPIES OF THIS PLAN SHEET.

4

NOTES:

1. EXISTING UTILITY FACILITIES HAVE NOT BEEN PLOTTED ON THESE PLANS.
2. CONFORM LOCATIONS AS SHOWN ON THE PLANS OR AS DIRECTED BY THE ENGINEER.

LEGEND:

- COLD PLANE ASPHALT CONCRETE PAVEMENT (0.10') 0.10' RHMA (TYPE G)
- COLD PLANE ASPHALT CONCRETE PAVEMENT (0.10') 0.10' RHMA (TYPE O)
- CRACK TREATMENT
- 0.04' GRIND EXISTING CONCRETE PAVEMENT
- REPLACE CONCRETE PAVEMENT (RAPID STRENGTH CONCRETE)

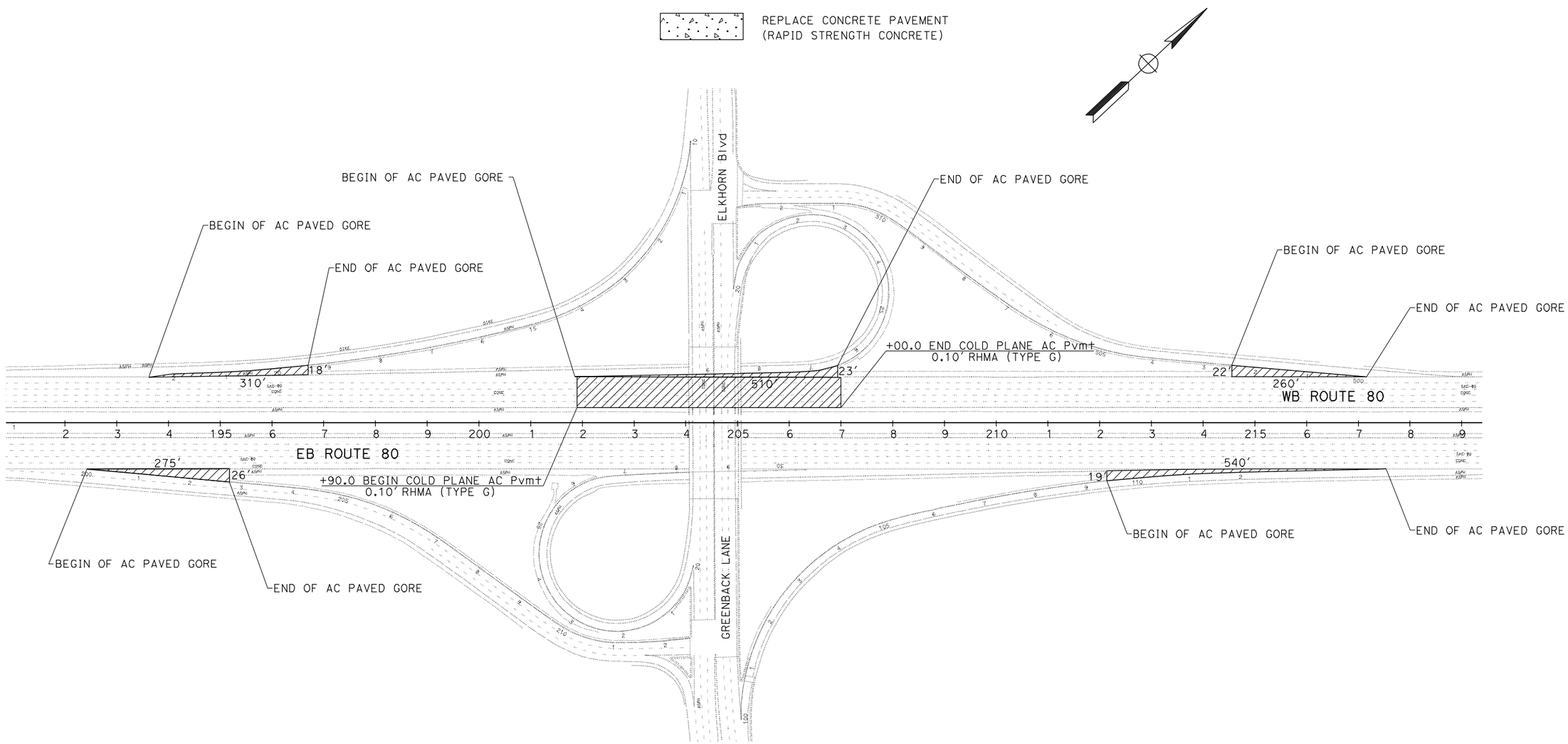

ROUTE 80 AND GREENBACK LANE INTERCHANGE

4 **ADDED PER ADDENDUM No. 4 DATED NOVEMBER 16, 2011**

CONSTRUCTION DETAILS

NO SCALE

C-1

STATE OF CALIFORNIA - DEPARTMENT OF TRANSPORTATION
Caltrans
TRAFFIC DESIGN

FUNCTIONAL SUPERVISOR: LAURIE LAMMERT
CALCULATED-DESIGNED BY: AI K. TRAN
CHECKED BY
REVISED BY
DATE REVISED

LAST REVISION 00-00-00
DATE PLOTTED => 15-NOV-2011
TIME PLOTTED => 14:24

Dist	COUNTY	ROUTE	POST MILES TOTAL PROJECT	SHEET No.	TOTAL SHEETS
03	Sac	80,244	12.5/18.0 0.0/1.1	6	32

6-6-11
REGISTERED CIVIL ENGINEER DATE

6-6-11
PLANS APPROVAL DATE

REGISTERED PROFESSIONAL ENGINEER
AI K. TRAN
No. 64269
Exp. 6-30-13
CIVIL
STATE OF CALIFORNIA

THE STATE OF CALIFORNIA OR ITS OFFICERS OR AGENTS SHALL NOT BE RESPONSIBLE FOR THE ACCURACY OR COMPLETENESS OF SCANNED COPIES OF THIS PLAN SHEET.

4

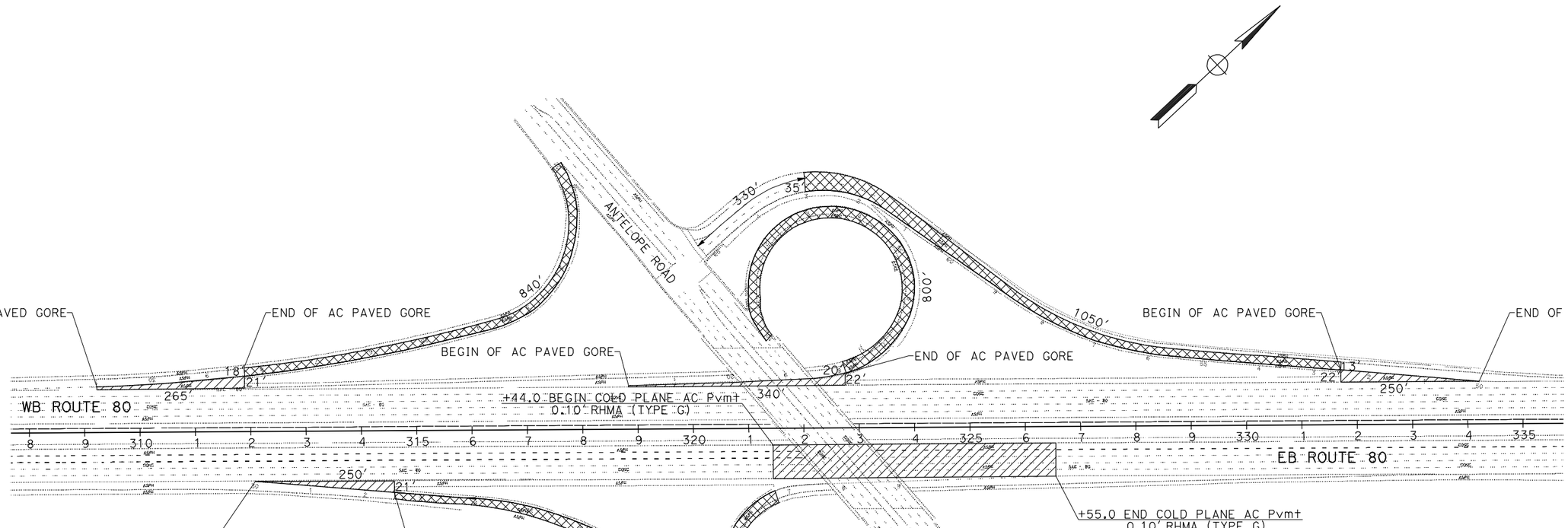

ROUTE 80/ANTELOPE ROAD INTERCHANGE

4 **ADDED PER ADDENDUM No. 4 DATED NOVEMBER 16, 2011**

CONSTRUCTION DETAILS

NO SCALE

C-3

CALCULATED-DESIGNED BY
CHECKED BY

AI K. TRAN
REVISED BY
DATE REVISED

FUNCTIONAL SUPERVISOR
LAURIE LAMMERT

STATE OF CALIFORNIA - DEPARTMENT OF TRANSPORTATION
Caltrans®
TRAFFIC DESIGN

LAST REVISION 00-00-00
DATE PLOTTED => 15-NOV-2011
TIME PLOTTED => 14:24

BORDER LAST REVISED 7/2/2010

USERNAME => s134507
DGN FILE => 03000204511ga003.dgn

RELATIVE BORDER SCALE IS IN INCHES 0 1 2 3

UNIT 0399

PROJECT NUMBER & PHASE 03000204511

Dist	COUNTY	ROUTE	POST MILES TOTAL PROJECT	SHEET No.	TOTAL SHEETS
03	Sac	80,244	12.5/18.0 0.0/1.1	8	32

REGISTERED CIVIL ENGINEER — DATE 6-6-11

AI K. TRAN No. 64269 Exp. 6-30-13 CIVIL — REGISTERED PROFESSIONAL ENGINEER — STATE OF CALIFORNIA

6-6-11
PLANS APPROVAL DATE

THE STATE OF CALIFORNIA OR ITS OFFICERS OR AGENTS SHALL NOT BE RESPONSIBLE FOR THE ACCURACY OR COMPLETENESS OF SCANNED COPIES OF THIS PLAN SHEET.

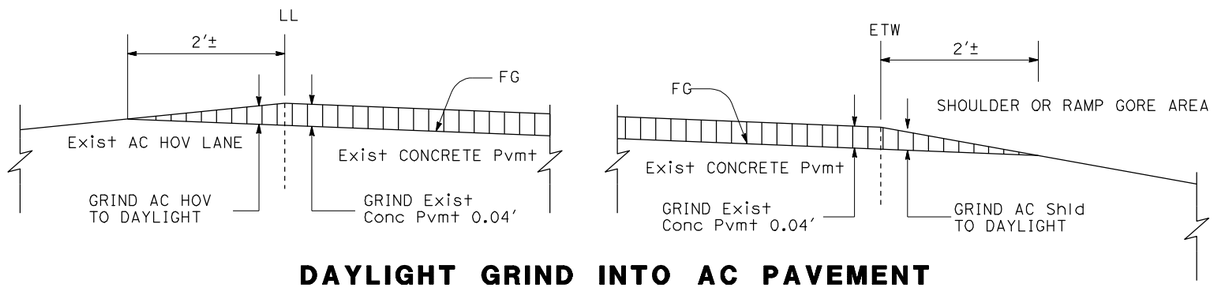

DAYLIGHT GRIND INTO AC PAVEMENT

(EASTBOUND SHOWN - WESTBOUND SIMILAR)

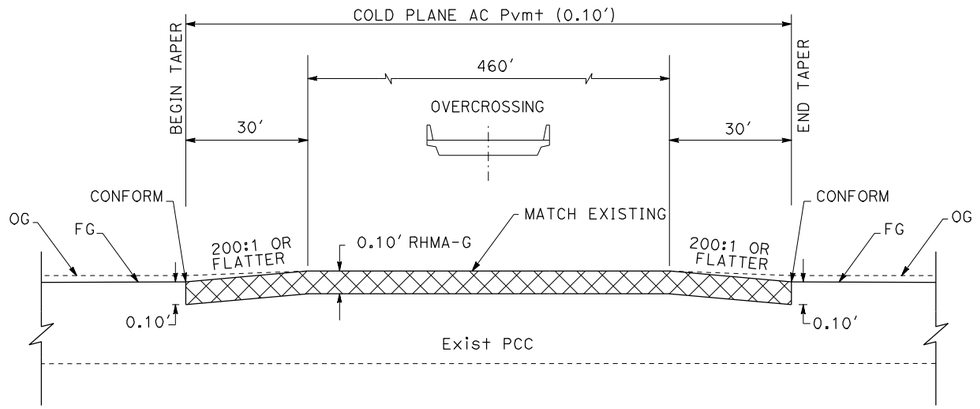

CONFORM AT GREENBACK LANE AND ANTELOPE ROAD OVERCROSSING

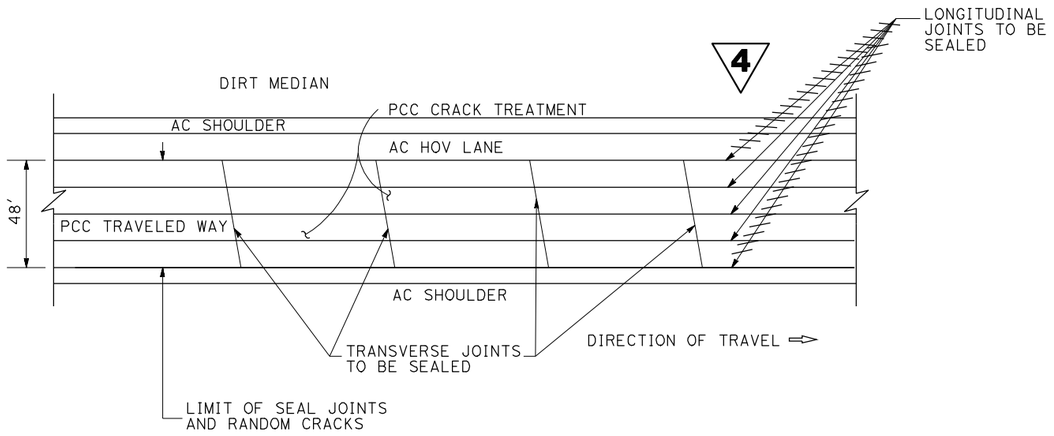

PLAN

SEAL JOINT AND RANDOM CRACK DETAIL

4 ADDED PER ADDENDUM No. 4 DATED NOVEMBER 16, 2011

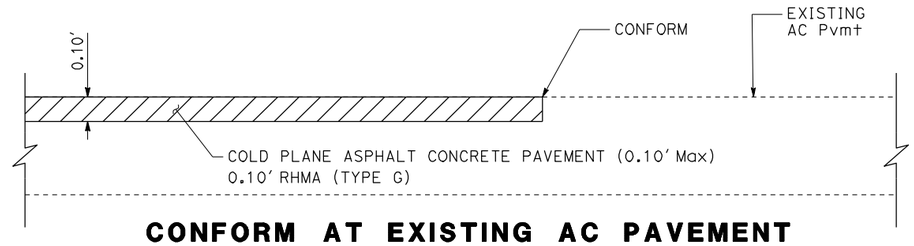

CONFORM AT EXISTING AC PAVEMENT

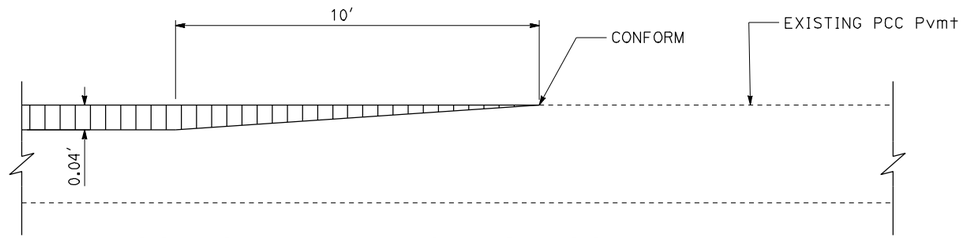

CONFORM AT EXISTING PCC PAVEMENT

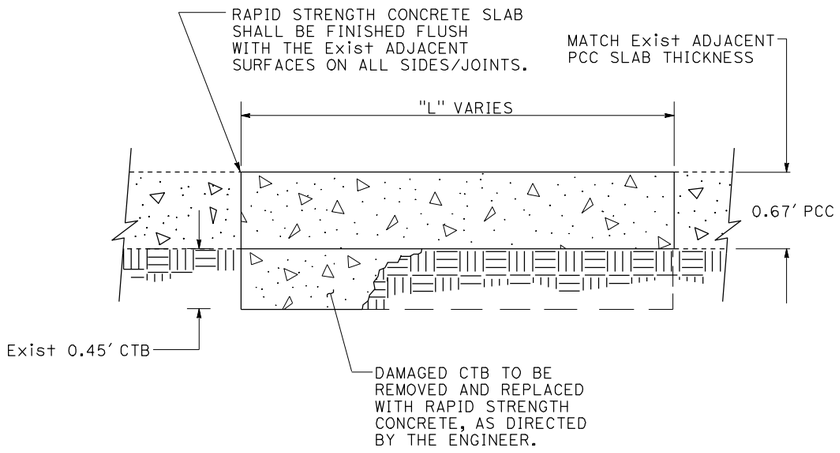

TYPICAL PCC SLAB REPLACEMENT DETAIL

CONSTRUCTION DETAILS

NO SCALE

C-5

REVISED BY | DATE REVISED
AI K. TRAN | CALCULATED-DESIGNED BY | CHECKED BY
FUNCTIONAL SUPERVISOR: LAURIE LAMMERT
STATE OF CALIFORNIA - DEPARTMENT OF TRANSPORTATION
Caltrans® TRAFFIC DESIGN

LAST REVISION 00-00-00 | DATE PLOTTED => 15-NOV-2011 | TIME PLOTTED => 14:24

BORDER LAST REVISED 7/2/2010 | USERNAME => s134507 | DGN FILE => 0300020451ga005.dgn | RELATIVE BORDER SCALE IS IN INCHES 0 1 2 3 | UNIT 0399 | PROJECT NUMBER & PHASE 03000204511

Dist	COUNTY	ROUTE	POST MILES TOTAL PROJECT	SHEET No.	TOTAL SHEETS
03	Sac	80,244	12.5/18.0 0.0/1.1	11A	32

REGISTERED CIVIL ENGINEER — 10-24-11 DATE

6-6-11
PLANS APPROVAL DATE

REGISTERED PROFESSIONAL ENGINEER
AI K. TRAN
No. 64269
Exp. 6-30-13
CIVIL
STATE OF CALIFORNIA

THE STATE OF CALIFORNIA OR ITS OFFICERS OR AGENTS SHALL NOT BE RESPONSIBLE FOR THE ACCURACY OR COMPLETENESS OF SCANNED COPIES OF THIS PLAN SHEET.

Notes:

1. Exact sign locations, including PCMS signs, to be determined by the Engineer.
2. All sign codes shown are Federal Sign Codes unless otherwise designated as California Sign Codes.
3. Number of sign panels required per detour shown does not include signs shown on Standard Plans.
4. This plan accurate for detour traffic handling only.

LEGEND

PCMS	Portable Changeable Message Sign
<CA>	California Sign Code
↑	Sign - Single Post
⇨	Direction of Travel

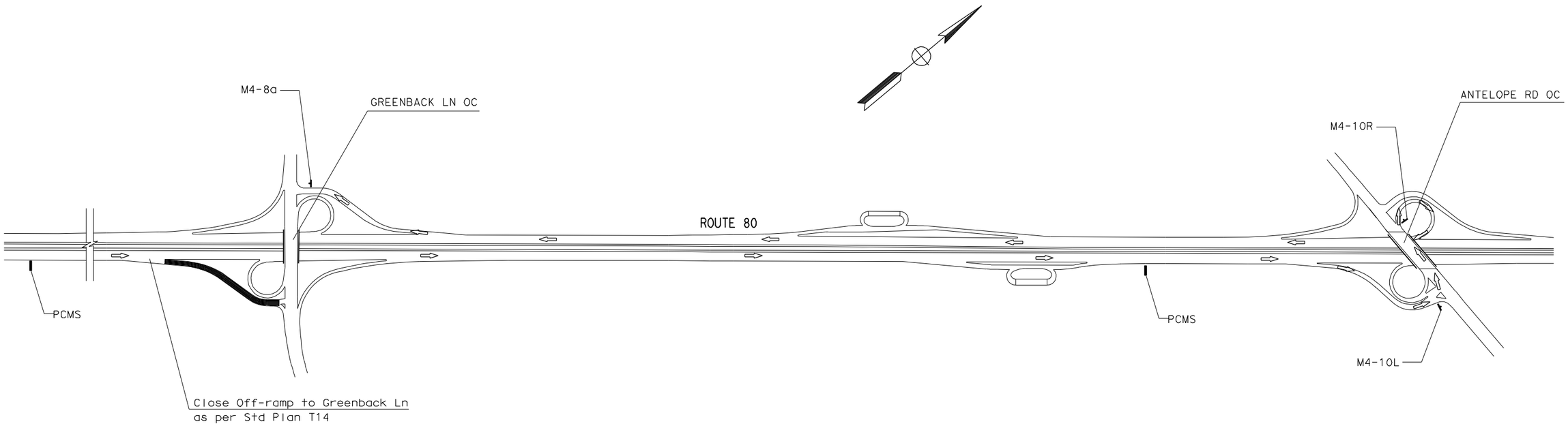

TRAFFIC DETOUR PLAN:

1. CLOSE EB OFF-RAMP TO GREENBACK LANE
2. GO STRAIGHT EB ROUTE 80
3. TAKE EB OFF-RAMP TO ANTELOPE ROAD
4. TAKE WB ON-RAMP ROUTE 80
5. TAKE WB OFF-RAMP TO GREENBACK LANE

Sign Code		Sign Panel Size (Minimum)	Number of Sign Panels Required
Federal	California		
M4-10L	C5 (Lt)	48" X 18"	1
M4-10R	C5 (Rt)	48" X 18"	1
M4-8a	C7	24" X 18"	1

4 ADDED PER ADDENDUM No. 4 DATED NOVEMBER 16, 2011

DETOUR PLAN

NO SCALE

DE-1

REVISED BY | DATE REVISED
AI K. TRAN |
CALCULATED-DESIGNED BY | CHECKED BY
FUNCTIONAL SUPERVISOR: LAURIE LAMMERT
STATE OF CALIFORNIA - DEPARTMENT OF TRANSPORTATION
Caltrans® TRAFFIC DESIGN

LAST REVISION 00-00-00 | DATE PLOTTED => 15-NOV-2011 | TIME PLOTTED => 14:24

Dist	COUNTY	ROUTE	POST MILES TOTAL PROJECT	SHEET No.	TOTAL SHEETS
03	Sac	80,244	12.5/18.0 0.0/1.1	11B	32

REGISTERED CIVIL ENGINEER — 10-24-11 DATE

6-6-11
PLANS APPROVAL DATE

REGISTERED PROFESSIONAL ENGINEER
AI K. TRAN
No. 64269
Exp. 6-30-13
CIVIL
STATE OF CALIFORNIA

THE STATE OF CALIFORNIA OR ITS OFFICERS OR AGENTS SHALL NOT BE RESPONSIBLE FOR THE ACCURACY OR COMPLETENESS OF SCANNED COPIES OF THIS PLAN SHEET.

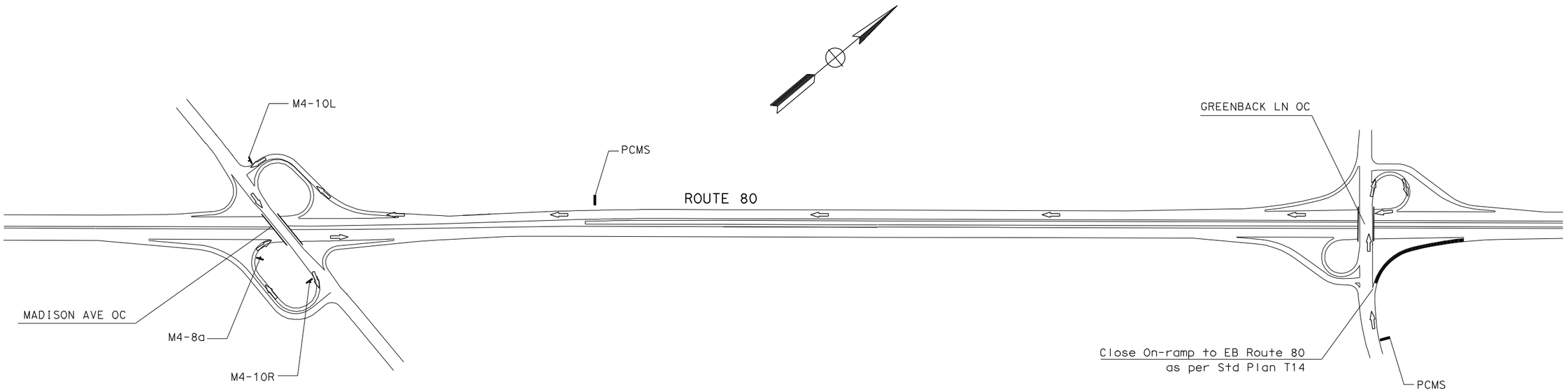

TRAFFIC DETOUR PLAN:

1. CLOSE NB GREENBACK LANE ON-RAMP TO EB ROUTE 80
2. GO STRAIGHT NB GREENBACK LANE
3. TAKE ON-RAMP LOOP TO WB ROUTE 80
4. TAKE WB OFF-RAMP TO MADISON AVE
5. TAKE LEFT ONTO MADISON AVE
6. TAKE ON-RAMP LOOP TO EB ROUTE 80

Sign Code		Sign Panel Size (Minimum)	Number of Sign Panels Required
Federal	California		
M4-10L	C5 (Lt)	48" X 18"	1
M4-10R	C5 (Rt)	48" X 18"	1
M4-8a	C7	24" X 18"	1

4 **ADDED PER ADDENDUM No. 4 DATED NOVEMBER 16, 2011**

DETOUR PLAN

NO SCALE

DE-2

STATE OF CALIFORNIA - DEPARTMENT OF TRANSPORTATION
Caltrans® **TRAFFIC DESIGN**

FUNCTIONAL SUPERVISOR: LAURIE LAMMERT

CALCULATED-DESIGNED BY: AI K. TRAN
CHECKED BY:

REVISED BY
DATE REVISED

LAST REVISION
DATE PLOTTED => 15-NOV-2011
TIME PLOTTED => 14:24
00-00-00

BORDER LAST REVISED 7/2/2010

USERNAME => s134507
DGN FILE => 0300020451mg002.dgn

RELATIVE BORDER SCALE IS IN INCHES 0 1 2 3

UNIT 0399

PROJECT NUMBER & PHASE 03000204511

Dist	COUNTY	ROUTE	POST MILES TOTAL PROJECT	SHEET No.	TOTAL SHEETS
03	Sac	80,244	12.5/18.0 0.0/1.1	11C	32

REGISTERED CIVIL ENGINEER — 10-24-11 DATE

6-6-11
PLANS APPROVAL DATE

REGISTERED PROFESSIONAL ENGINEER
AI K. TRAN
No. 64269
Exp. 6-30-13
CIVIL
STATE OF CALIFORNIA

THE STATE OF CALIFORNIA OR ITS OFFICERS OR AGENTS SHALL NOT BE RESPONSIBLE FOR THE ACCURACY OR COMPLETENESS OF SCANNED COPIES OF THIS PLAN SHEET.

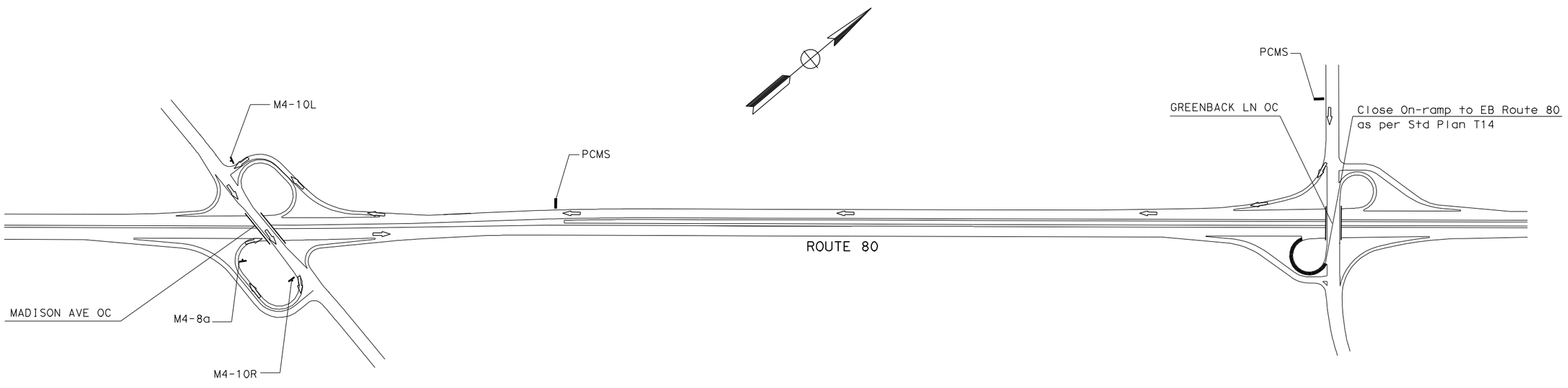

TRAFFIC DETOUR PLAN:

1. CLOSE ON-RAMP LOOP FROM GREENBACK LANE TO EB ROUTE 80
2. TAKE ON-RAMP SPLIT TO WB ROUTE 80
3. TAKE WB OFF-RAMP TO MADISON AVENUE
4. TAKE LEFT TURN ONTO MADISON AVENUE
5. TAKE ON-RAMP LOOP TO EB ROUTE 80

Sign Code		Sign Panel Size (Minimum)	Number of Sign Panels Required
Federal	California		
M4-10L	C5 (L†)	48" X 18"	1
M4-10R	C5 (R†)	48" X 18"	1
M4-8a	C7	24" X 18"	1

4 ADDED PER ADDENDUM No. 4 DATED NOVEMBER 16, 2011

DETOUR PLAN

NO SCALE

DE-3

STATE OF CALIFORNIA - DEPARTMENT OF TRANSPORTATION
TRAFFIC DESIGN
FUNCTIONAL SUPERVISOR: LAURIE LAMMERT
CALCULATED-DESIGNED BY: AI K. TRAN
CHECKED BY:
REVISED BY
DATE REVISED

LAST REVISION DATE PLOTTED => 15-NOV-2011
00-00-00 TIME PLOTTED => 14:24

BORDER LAST REVISED 7/2/2010 | USERNAME => s134507 | DGN FILE => 0300020451mg003.dgn | RELATIVE BORDER SCALE IS IN INCHES 0 1 2 3 | UNIT 0399 | PROJECT NUMBER & PHASE 03000204511

Dist	COUNTY	ROUTE	POST MILES TOTAL PROJECT	SHEET No.	TOTAL SHEETS
03	Sac	80,244	12.5/18.0 0.0/1.1	11D	32

REGISTERED CIVIL ENGINEER — 10-24-11 DATE

6-6-11
PLANS APPROVAL DATE

REGISTERED PROFESSIONAL ENGINEER
AI K. TRAN
No. 64269
Exp. 6-30-13
CIVIL
STATE OF CALIFORNIA

THE STATE OF CALIFORNIA OR ITS OFFICERS OR AGENTS SHALL NOT BE RESPONSIBLE FOR THE ACCURACY OR COMPLETENESS OF SCANNED COPIES OF THIS PLAN SHEET.

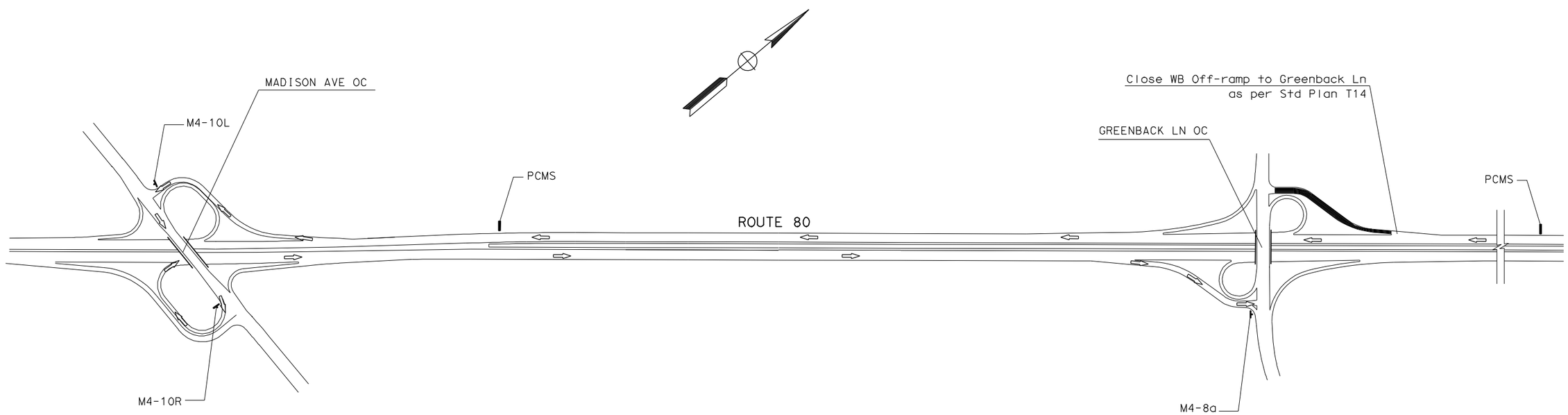

TRAFFIC DETOUR PLAN:

1. CLOSE WB OFF-RAMP TO GREENBACK LANE
2. GO STRAIGHT WB ROUTE 80
3. TAKE WB OFF-RAMP TO MADISON AVENUE
4. TURN LEFT ONTO MADISON AVENUE
5. TAKE ON-RAMP LOOP TO EB ROUTE 80
6. TAKE EB OFF-RAMP TO GREENBACK LANE

Sign Code		Sign Panel Size (Minimum)	Number of Sign Panels Required
Federal	California		
M4-10L	C5 (L†)	48" X 18"	1
M4-10R	C5 (R†)	48" X 18"	1
M4-8a	C7	24" X 18"	1

4 **ADDED PER ADDENDUM No. 4 DATED NOVEMBER 16, 2011**

DETOUR PLAN

NO SCALE

DE-4

REVISED BY | DATE REVISED
AI K. TRAN | CALCULATED-DESIGNED BY | CHECKED BY
FUNCTIONAL SUPERVISOR: LAURIE LAMMERT
STATE OF CALIFORNIA - DEPARTMENT OF TRANSPORTATION
Caltrans® TRAFFIC DESIGN

LAST REVISION 00-00-00 | DATE PLOTTED => 15-NOV-2011 | TIME PLOTTED => 14:24

BORDER LAST REVISED 7/2/2010 | USERNAME => s134507 | DGN FILE => 0300020451mg004.dgn | RELATIVE BORDER SCALE IS IN INCHES 0 1 2 3 | UNIT 0399 | PROJECT NUMBER & PHASE 03000204511

Dist	COUNTY	ROUTE	POST MILES TOTAL PROJECT	SHEET No.	TOTAL SHEETS
03	Sac	80,244	12.5/18.0 0.0/1.1	11E	32

REGISTERED CIVIL ENGINEER — 10-24-11 DATE

6-6-11
PLANS APPROVAL DATE

REGISTERED PROFESSIONAL ENGINEER
AI K. TRAN
No. 64269
Exp. 6-30-13
CIVIL
STATE OF CALIFORNIA

THE STATE OF CALIFORNIA OR ITS OFFICERS OR AGENTS SHALL NOT BE RESPONSIBLE FOR THE ACCURACY OR COMPLETENESS OF SCANNED COPIES OF THIS PLAN SHEET.

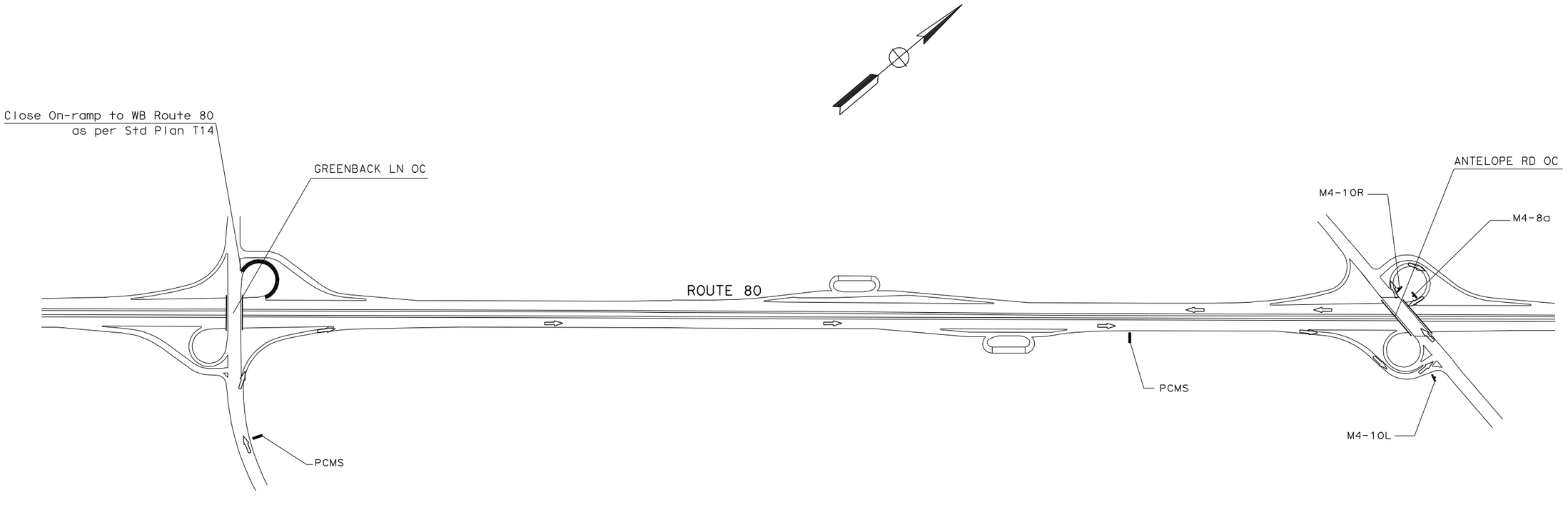

TRAFFIC DETOUR PLAN:

1. CLOSE ON-RAMP LOOP FROM NB GREENBACK LANE TO WB ROUTE 80
2. TAKE NB ON-RAMP SPLIT FROM GREENBACK LANE TO EB ROUTE 80
3. TAKE EB OFF-RAMP TO ANTELOPE ROAD
4. TURN LEFT ONTO ANTELOPE ROAD
5. TAKE ON-RAMP LOOP TO WB ROUTE 80

Sign Code		Sign Panel Size (Minimum)	Number of Sign Panels Required
Federal	California		
M4-10L	C5 (Lt)	48" X 18"	1
M4-10R	C5 (Rt)	48" X 18"	1
M4-8a	C7	24" X 18"	1

4 ADDED PER ADDENDUM No. 4 DATED NOVEMBER 16, 2011

DETOUR PLAN

NO SCALE

DE-5

REVISED BY | DATE REVISED
AI K. TRAN | CALCULATED-DESIGNED BY
CHECKED BY
FUNCTIONAL SUPERVISOR: LAURIE LAMMERT

STATE OF CALIFORNIA - DEPARTMENT OF TRANSPORTATION
Caltrans® TRAFFIC DESIGN

LAST REVISION 00-00-00 | DATE PLOTTED => 15-NOV-2011 | TIME PLOTTED => 14:24

BORDER LAST REVISED 7/2/2010 | USERNAME => s134507 | DGN FILE => 0300020451mg005.dgn | RELATIVE BORDER SCALE IS IN INCHES 0 1 2 3 | UNIT 0399 | PROJECT NUMBER & PHASE 03000204511

Dist	COUNTY	ROUTE	POST MILES TOTAL PROJECT	SHEET No.	TOTAL SHEETS
03	Sac	80,244	12.5/18.0 0.0/1.1	11F	32

REGISTERED CIVIL ENGINEER — 10-24-11 DATE

6-6-11
PLANS APPROVAL DATE

REGISTERED PROFESSIONAL ENGINEER
AI K. TRAN
No. 64269
Exp. 6-30-13
CIVIL
STATE OF CALIFORNIA

THE STATE OF CALIFORNIA OR ITS OFFICERS OR AGENTS SHALL NOT BE RESPONSIBLE FOR THE ACCURACY OR COMPLETENESS OF SCANNED COPIES OF THIS PLAN SHEET.

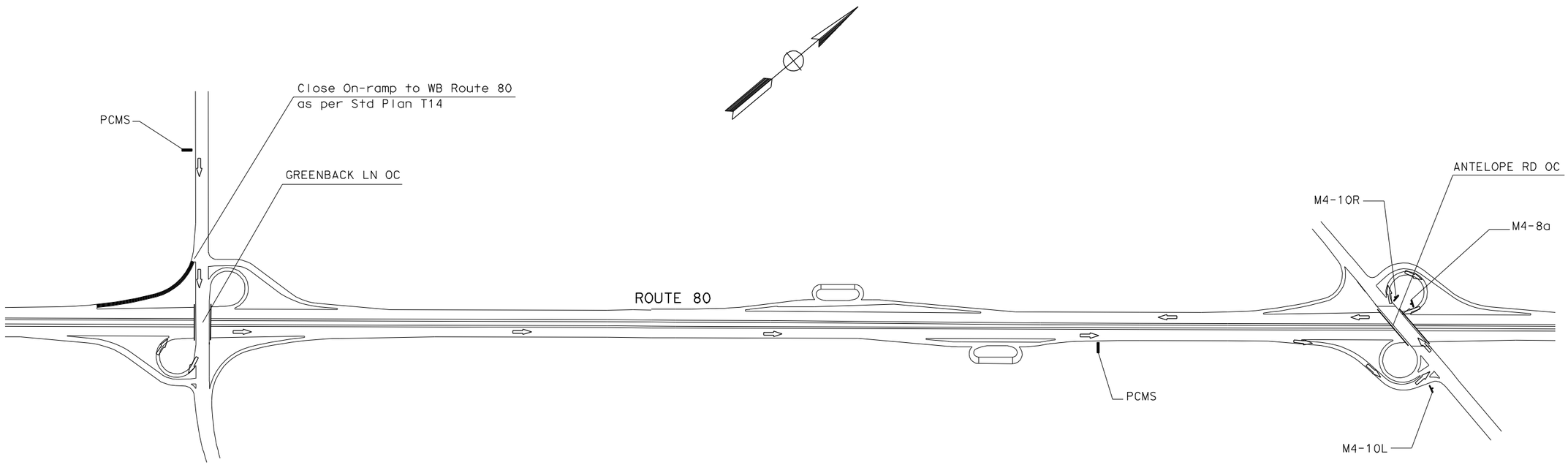

TRAFFIC DETOUR PLAN:

1. CLOSE ON-RAMP FROM SB GREENBACK LANE TO WB ROUTE 80
2. GO STRAIGHT SB GREENBACK LANE
3. TAKE ON-RAMP LOOP TO EB ROUTE 80
4. TAKE EB OFF-RAMP TO ANTELOPE ROAD
5. TURN LEFT ONTO ANTELOPE ROAD
6. TAKE ON-RAMP LOOP TO WB ROUTE 80

Sign Code		Sign Panel Size (Minimum)	Number of Sign Panels Required
Federal	California		
M4-10L	C5 (Lt)	48" X 18"	1
M4-10R	C5 (Rt)	48" X 18"	1
M4-8a	C7	24" X 18"	1

4 ADDED PER ADDENDUM No. 4 DATED NOVEMBER 16, 2011

DETOUR PLAN

NO SCALE

DE-6

STATE OF CALIFORNIA - DEPARTMENT OF TRANSPORTATION
Caltrans® TRAFFIC DESIGN

FUNCTIONAL SUPERVISOR: LAURIE LAMMERT
CALCULATED-DESIGNED BY: AI K. TRAN
CHECKED BY:
REVISED BY:
DATE REVISED:

LAST REVISION 00-00-00
DATE PLOTTED => 15-NOV-2011
TIME PLOTTED => 14:24

BORDER LAST REVISED 7/2/2010
USERNAME => s134507
DGN FILE => 0300020451mg006.dgn
RELATIVE BORDER SCALE IS IN INCHES 0 1 2 3
UNIT 0399
PROJECT NUMBER & PHASE 03000204511

Dist	COUNTY	ROUTE	POST MILES TOTAL PROJECT	SHEET No.	TOTAL SHEETS
03	Sac	80,244	12.5/18.0 0.0/1.1	11G	32

REGISTERED CIVIL ENGINEER — 10-24-11 DATE

6-6-11
PLANS APPROVAL DATE

AI K. TRAN
No. 64269
Exp. 6-30-13
CIVIL
REGISTERED PROFESSIONAL ENGINEER
STATE OF CALIFORNIA

THE STATE OF CALIFORNIA OR ITS OFFICERS OR AGENTS SHALL NOT BE RESPONSIBLE FOR THE ACCURACY OR COMPLETENESS OF SCANNED COPIES OF THIS PLAN SHEET.

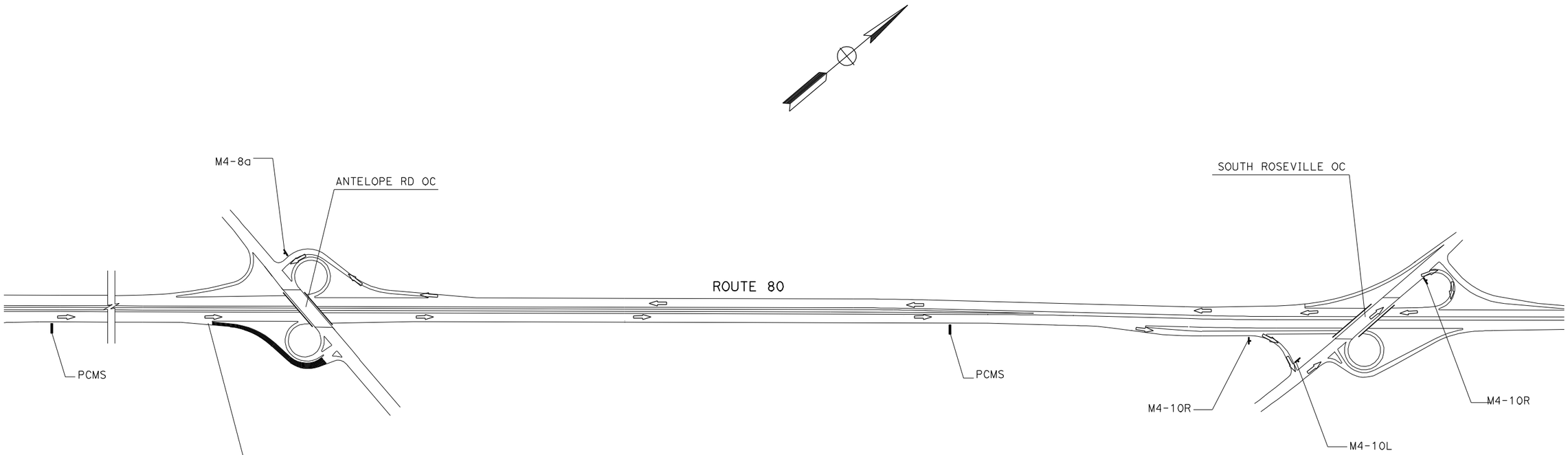

TRAFFIC DETOUR PLAN:

1. CLOSE EB OFF-RAMP TO ANTELOPE ROAD
2. GO STRAIGHT EB ROUTE 80
3. TAKE EB OFF-RAMP TO SOUTH ROSEVILLE
4. TAKE RIGHT LANE TO SOUTH ROSEVILLE
5. TURN LEFT ONTO SOUTH ROSEVILLE
6. TAKE ON-RAMP TO WB ROUTE 80
7. TAKE WB OFF-RAMP TO ANTELOPE ROAD

Sign Code		Sign Panel Size (Minimum)	Number of Sign Panels Required
Federal	California		
M4-10L	C5 (Lt)	48" X 18"	1
M4-10R	C5 (Rt)	48" X 18"	2
M4-8a	C7	24" X 18"	1

4 **ADDED PER ADDENDUM No. 4 DATED NOVEMBER 16, 2011**

DETOUR PLAN

NO SCALE

DE-7

STATE OF CALIFORNIA - DEPARTMENT OF TRANSPORTATION
Caltrans® **TRAFFIC DESIGN**

FUNCTIONAL SUPERVISOR: LAURIE LAMMERT

CALCULATED-DESIGNED BY: AI K. TRAN
CHECKED BY:

REVISED BY
DATE REVISED

LAST REVISION 00-00-00
DATE PLOTTED => 15-NOV-2011
TIME PLOTTED => 14:24

BORDER LAST REVISED 7/2/2010

USERNAME => s134507
DGN FILE => 0300020451mg007.dgn

RELATIVE BORDER SCALE IS IN INCHES 0 1 2 3

UNIT 0399

PROJECT NUMBER & PHASE 03000204511

Dist	COUNTY	ROUTE	POST MILES TOTAL PROJECT	SHEET No.	TOTAL SHEETS
03	Sac	80,244	12.5/18.0 0.0/1.1	11H	32

REGISTERED CIVIL ENGINEER — 10-24-11 DATE

6-6-11
PLANS APPROVAL DATE

REGISTERED PROFESSIONAL ENGINEER
AI K. TRAN
No. 64269
Exp. 6-30-13
CIVIL
STATE OF CALIFORNIA

THE STATE OF CALIFORNIA OR ITS OFFICERS OR AGENTS SHALL NOT BE RESPONSIBLE FOR THE ACCURACY OR COMPLETENESS OF SCANNED COPIES OF THIS PLAN SHEET.

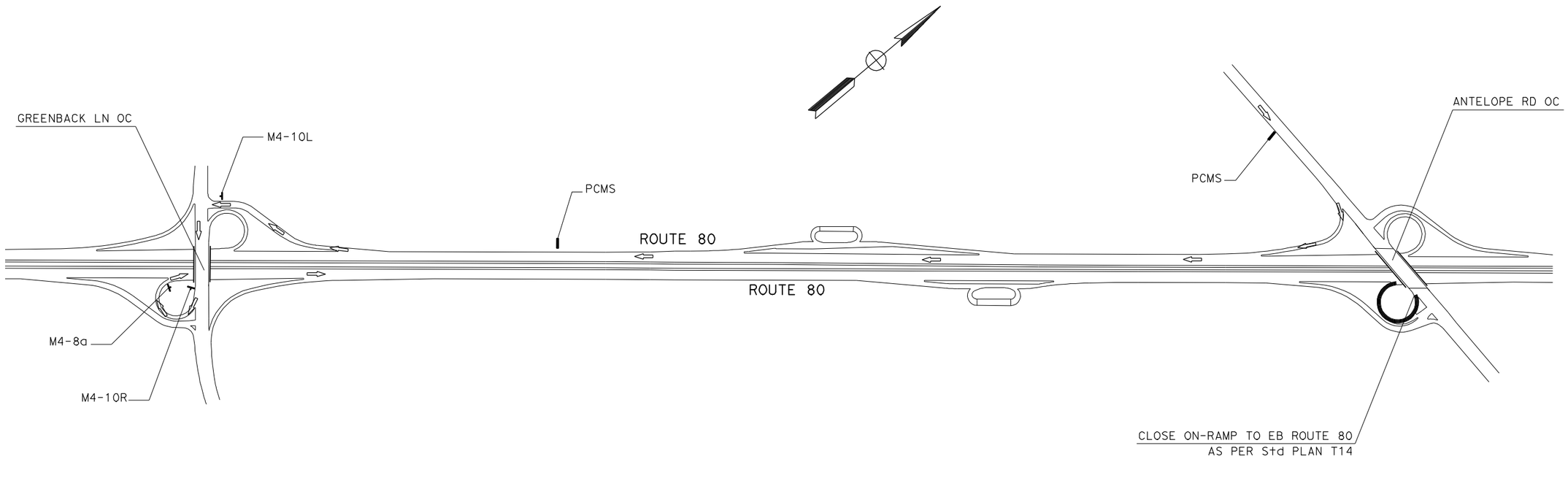

TRAFFIC DETOUR PLAN:

1. CLOSE ON-RAMP LOOP FROM SB ANTELOPE TO EB ROUTE 80
2. TAKE ON-RAMP SPLIT TO WB ROUTE 80
3. TAKE WB OFF-RAMP TO GREENBACK LANE
4. TURN LEFT ONTO GREENBACK LANE
5. TAKE ON-RAMP LOOP TO EB ROUTE 80

Sign Code		Sign Panel Size (Minimum)	Number of Sign Panels Required
Federal	California		
M4-10L	C5 (Lt)	48" X 18"	1
M4-10R	C5 (Rt)	48" X 18"	1
M4-8a	C7	24" X 18"	1

4 ADDED PER ADDENDUM No. 4 DATED NOVEMBER 16, 2011

DETOUR PLAN

NO SCALE

DE-8

STATE OF CALIFORNIA - DEPARTMENT OF TRANSPORTATION
Caltrans
TRAFFIC DESIGN

FUNCTIONAL SUPERVISOR: LAURIE LAMMERT
CALCULATED-DESIGNED BY: AI K. TRAN
CHECKED BY:
REVISED BY:
DATE REVISED:

LAST REVISION DATE PLOTTED => 15-NOV-2011
00-00-00 TIME PLOTTED => 14:24

BORDER LAST REVISED 7/2/2010
USERNAME => s134507
DGN FILE => 0300020451mg008.dgn
RELATIVE BORDER SCALE IS IN INCHES 0 1 2 3
UNIT 0399
PROJECT NUMBER & PHASE 03000204511

Dist	COUNTY	ROUTE	POST MILES TOTAL PROJECT	SHEET No.	TOTAL SHEETS
03	Sac	80,244	12.5/18.0 0.0/1.1	11I	32

REGISTERED CIVIL ENGINEER — 10-24-11 DATE

6-6-11
PLANS APPROVAL DATE

REGISTERED PROFESSIONAL ENGINEER
AI K. TRAN
No. 64269
Exp. 6-30-13
CIVIL
STATE OF CALIFORNIA

THE STATE OF CALIFORNIA OR ITS OFFICERS OR AGENTS SHALL NOT BE RESPONSIBLE FOR THE ACCURACY OR COMPLETENESS OF SCANNED COPIES OF THIS PLAN SHEET.

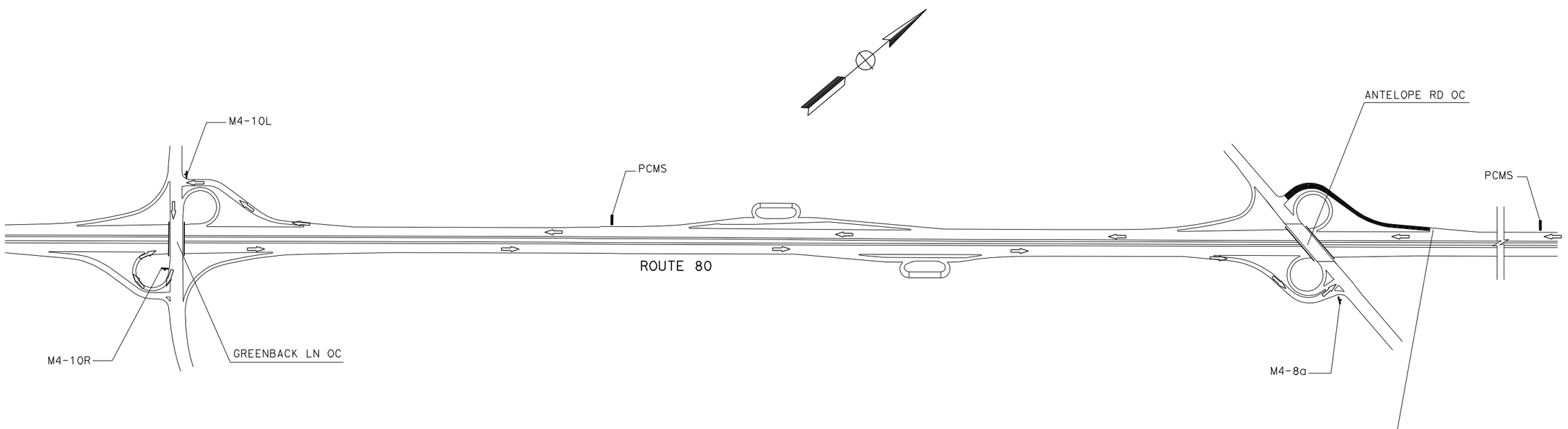

TRAFFIC DETOUR PLAN:

1. CLOSE WB OFF-RAMP TO ANTELOPE ROAD
2. GO STRAIGHT WB ROUTE 80
3. TAKE WB OFF-RAMP TO GREENBACK LANE
4. TURN LEFT ONTO GREENBACK LANE
5. TAKE ON-RAMP LOOP TO EB ROUTE 80
6. TAKE WB OFF-RAMP TO ANTELOPE ROAD

SIGN CODE		SIGN PANEL SIZE (MINIMUM)	NUMBER OF SIGN PANELS REQUIRED
FEDERAL	CALIFORNIA		
M4-10L	C5 (Lt)	48" X 18"	1
M4-10R	C5 (Rt)	48" X 18"	1
M4-8a	C7	24" X 18"	1

4 ADDED PER ADDENDUM No. 4 DATED NOVEMBER 16, 2011

DETOUR PLAN

NO SCALE

DE-9

REVISED BY | DATE REVISED
AI K. TRAN | CALCULATED-DESIGNED BY
CHECKED BY
FUNCTIONAL SUPERVISOR: LAURIE LAMMERT
STATE OF CALIFORNIA - DEPARTMENT OF TRANSPORTATION
Caltrans® TRAFFIC DESIGN

LAST REVISION 00-00-00 | DATE PLOTTED => 15-NOV-2011 | TIME PLOTTED => 14:24

BORDER LAST REVISED 7/2/2010 | USERNAME => s134507 | DGN FILE => 0300020451mg009.dgn | RELATIVE BORDER SCALE IS IN INCHES 0 1 2 3 | UNIT 0399 | PROJECT NUMBER & PHASE 03000204511

Dist	COUNTY	ROUTE	POST MILES TOTAL PROJECT	SHEET No.	TOTAL SHEETS
03	Sac	80,244	12.5/18.0 0.0/1.1	11J	32

REGISTERED CIVIL ENGINEER — DATE: 10-24-11

6-6-11
PLANS APPROVAL DATE

REGISTERED PROFESSIONAL ENGINEER
AI K. TRAN
No. 64269
Exp. 6-30-13
CIVIL
STATE OF CALIFORNIA

THE STATE OF CALIFORNIA OR ITS OFFICERS OR AGENTS SHALL NOT BE RESPONSIBLE FOR THE ACCURACY OR COMPLETENESS OF SCANNED COPIES OF THIS PLAN SHEET.

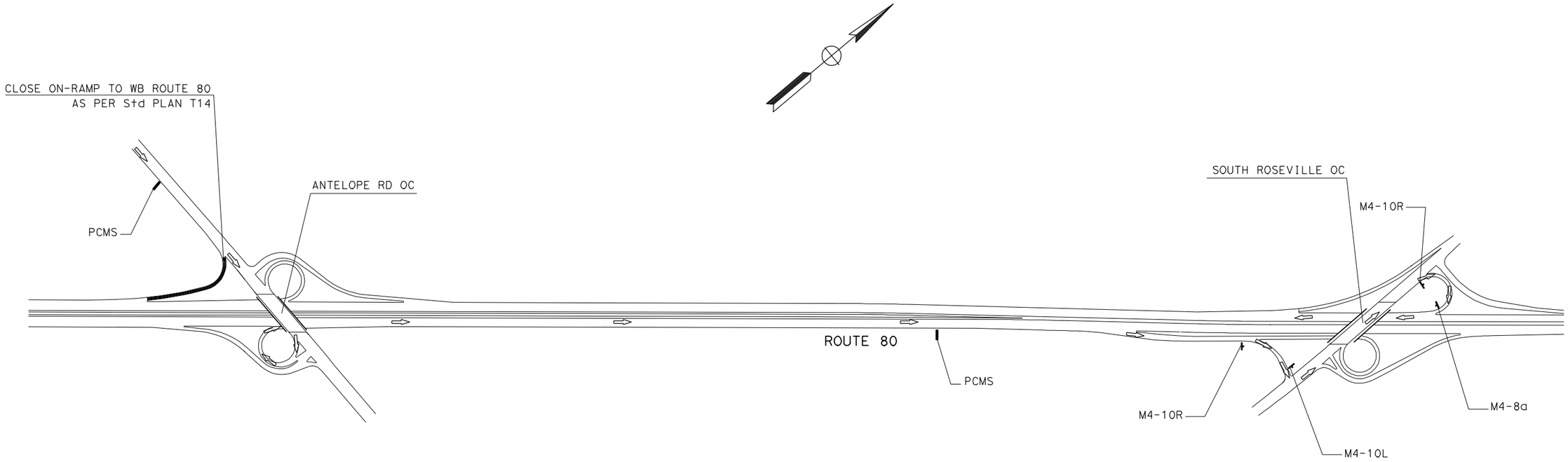

TRAFFIC DETOUR PLAN:

1. CLOSE ON-RAMP FROM SB ANTELOPE ROAD TO WB ROUTE 80
2. GO STRAIGHT SB ANTELOPE ROAD
3. TAKE ON-RAMP LOOP TO EB ROUTE 80
4. TAKE EB OFF-RAMP TO SOUTH ROSEVILLE
5. TAKE RIGHT LANE TO SOUTH ROSEVILLE
6. TURN LEFT ONTO SOUTH ROSEVILLE
7. TAKE ON-RAMP TO WB ROUTE 80

SIGN CODE		SIGN PANEL SIZE (MINIMUM)	NUMBER OF SIGN PANELS REQUIRED
FEDERAL	CALIFORNIA		
M4-10L	C5 (L†)	48" X 18"	1
M4-10R	C5 (R†)	48" X 18"	2
M4-8a	C7	24" X 18"	1

4 ADDED PER ADDENDUM No. 4 DATED NOVEMBER 16, 2011

DETOUR PLAN

NO SCALE

DE-10

REVISED BY | DATE REVISED
AI K. TRAN | CALCULATED-DESIGNED BY | CHECKED BY
FUNCTIONAL SUPERVISOR: LAURIE LAMMERT
STATE OF CALIFORNIA - DEPARTMENT OF TRANSPORTATION
Caltrans® TRAFFIC DESIGN

LAST REVISION | DATE PLOTTED => 15-NOV-2011
00-00-00 | TIME PLOTTED => 14:24

BORDER LAST REVISED 7/2/2010 | USERNAME => s134507 | DGN FILE => 0300020451mg010.dgn | RELATIVE BORDER SCALE IS IN INCHES 0 1 2 3 | UNIT 0399 | PROJECT NUMBER & PHASE 03000204511

Dist	COUNTY	ROUTE	POST MILES TOTAL PROJECT	SHEET No.	TOTAL SHEETS
03	Sac	80,244	12.5/18.0 0.0/1.1	11K	32

REGISTERED CIVIL ENGINEER — 10-24-11 DATE

6-6-11
PLANS APPROVAL DATE

REGISTERED PROFESSIONAL ENGINEER
AI K. TRAN
No. 64269
Exp. 6-30-13
CIVIL
STATE OF CALIFORNIA

THE STATE OF CALIFORNIA OR ITS OFFICERS OR AGENTS SHALL NOT BE RESPONSIBLE FOR THE ACCURACY OR COMPLETENESS OF SCANNED COPIES OF THIS PLAN SHEET.

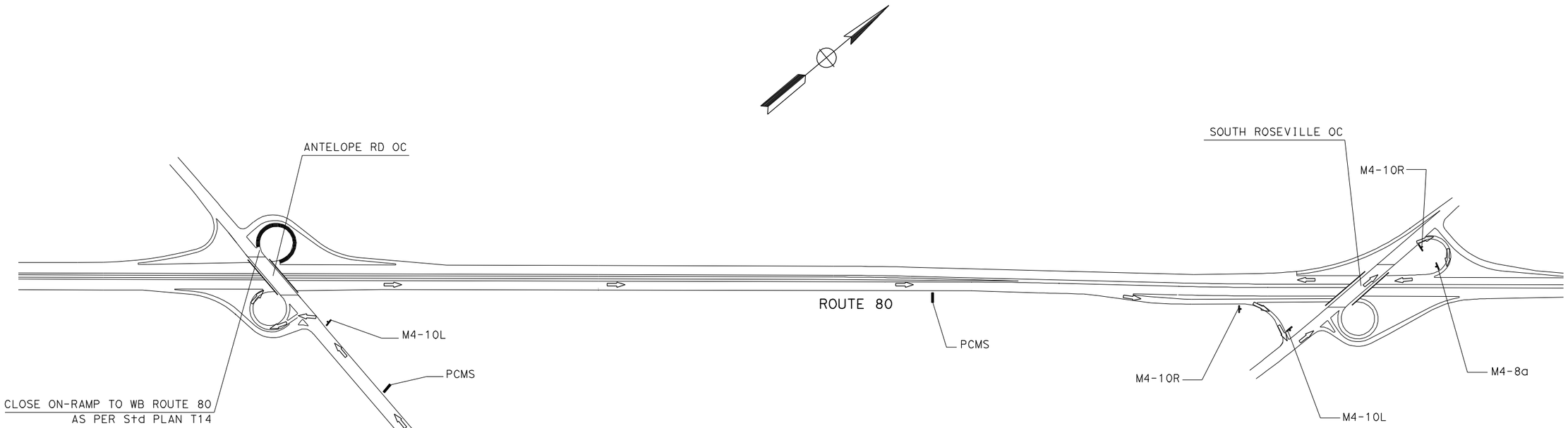

TRAFFIC DETOUR PLAN:

1. CLOSE ON-RAMP FROM NB ANTELOPE ROAD TO WB ROUTE 80
2. TURN LEFT ONTO EB ON-RAMP LOOP ROUTE 80
3. TAKE EB OFF-RAMP TO SOUTH ROSEVILLE
4. TAKE RIGHT LANE TO SOUTH ROSEVILLE
5. TURN LEFT ONTO SOUTH ROSEVILLE
6. TAKE ON-RAMP TO WB ROUTE 80

SIGN CODE		SIGN PANEL SIZE (MINIMUM)	NUMBER OF SIGN PANELS REQUIRED
FEDERAL	CALIFORNIA		
M4-10L	C5 (L†)	48" X 18"	2
M4-10R	C5 (R†)	48" X 18"	2
M4-8a	C7	24" X 18"	1

4 **ADDED PER ADDENDUM No. 4 DATED NOVEMBER 16, 2011**

DETOUR PLAN

NO SCALE

DE-11

STATE OF CALIFORNIA - DEPARTMENT OF TRANSPORTATION
Caltrans® **TRAFFIC DESIGN**

FUNCTIONAL SUPERVISOR: LAURIE LAMMERT

CALCULATED-DESIGNED BY: AI K. TRAN
CHECKED BY:

REVISED BY
DATE REVISED

LAST REVISION
DATE PLOTTED => 15-NOV-2011
TIME PLOTTED => 14:24
00-00-00

BORDER LAST REVISED 7/2/2010
USERNAME => s134507
DGN FILE => 0300020451mg011.dgn
RELATIVE BORDER SCALE IS IN INCHES 0 1 2 3
UNIT 0399
PROJECT NUMBER & PHASE 03000204511

Dist	COUNTY	ROUTE	POST MILES TOTAL PROJECT	SHEET No.	TOTAL SHEETS
03	Sac	80,244	12.5/18.0 0.0/1.1	11L	32

REGISTERED CIVIL ENGINEER — DATE 10-24-11

PLANS APPROVAL DATE 6-6-11

REGISTERED PROFESSIONAL ENGINEER — AI K. TRAN — No. 64269 — Exp. 6-30-11 — CIVIL — STATE OF CALIFORNIA

THE STATE OF CALIFORNIA OR ITS OFFICERS OR AGENTS SHALL NOT BE RESPONSIBLE FOR THE ACCURACY OR COMPLETENESS OF SCANNED COPIES OF THIS PLAN SHEET.

Sign Code		Sign Panel Size (Minimum)	Number of Sign Panels Required
Federal	California		
	SC3	48" X 18"	1
M4-10R	C5 (Rt)	48" X 18"	1
M4-8a	C7	24" X 18"	3

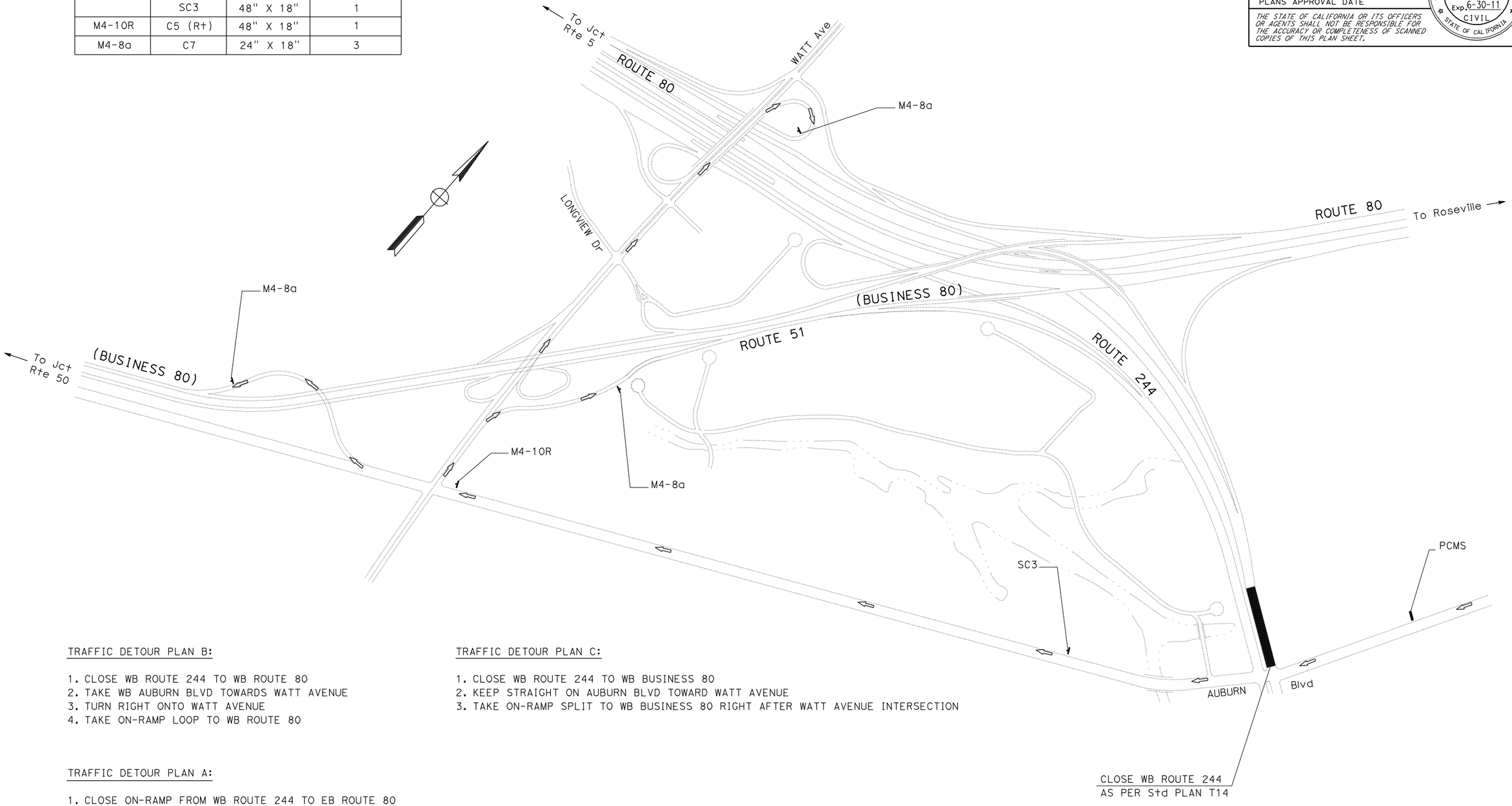

TRAFFIC DETOUR PLAN B:

1. CLOSE WB ROUTE 244 TO WB ROUTE 80
2. TAKE WB AUBURN BLVD TOWARDS WATT AVENUE
3. TURN RIGHT ONTO WATT AVENUE
4. TAKE ON-RAMP LOOP TO WB ROUTE 80

TRAFFIC DETOUR PLAN C:

1. CLOSE WB ROUTE 244 TO WB BUSINESS 80
2. KEEP STRAIGHT ON AUBURN BLVD TOWARD WATT AVENUE
3. TAKE ON-RAMP SPLIT TO WB BUSINESS 80 RIGHT AFTER WATT AVENUE INTERSECTION

TRAFFIC DETOUR PLAN A:

1. CLOSE ON-RAMP FROM WB ROUTE 244 TO EB ROUTE 80
2. TAKE WB AUBURN BLVD TOWARDS WATT AVENUE
3. TURN RIGHT ONTO WATT AVENUE
4. TAKE SPLIT ON-RAMP TO EB ROUTE 80

CLOSE WESTBOUND ROUTE 244 (SHEET 1 OF 2)

4 ADDED PER ADDENDUM No. 4 DATED NOVEMBER 16, 2011

DETOUR PLAN

NO SCALE

DE-12

STATE OF CALIFORNIA - DEPARTMENT OF TRANSPORTATION
Caltrans® TRAFFIC DESIGN
FUNCTIONAL SUPERVISOR: LAURIE LAMMERT
CALCULATED-DESIGNED BY: AI K. TRAN
CHECKED BY:
REVISED BY
DATE REVISED

LAST REVISION 00-00-00
DATE PLOTTED => 15-NOV-2011
TIME PLOTTED => 14:24

BORDER LAST REVISED 7/2/2010
USERNAME => s134507
DGN FILE => 0300020451mg012.dgn
RELATIVE BORDER SCALE IS IN INCHES 0 1 2 3
UNIT 0399
PROJECT NUMBER & PHASE 03000204511

Dist	COUNTY	ROUTE	POST MILES TOTAL PROJECT	SHEET No.	TOTAL SHEETS
03	Sac	80,244	12.5/18.0 0.0/1.1	11M	32

REGISTERED CIVIL ENGINEER — 10-24-11 DATE

6-6-11
PLANS APPROVAL DATE

REGISTERED PROFESSIONAL ENGINEER
AI K. TRAN
No. 64269
Exp. 6-30-11
CIVIL
STATE OF CALIFORNIA

THE STATE OF CALIFORNIA OR ITS OFFICERS OR AGENTS SHALL NOT BE RESPONSIBLE FOR THE ACCURACY OR COMPLETENESS OF SCANNED COPIES OF THIS PLAN SHEET.

TRAFFIC DETOUR PLAN A:

1. CLOSE ON-RAMP FROM WB ROUTE 244 TO EB ROUTE 80
2. TAKE AUBURN BLVD TO COLLEGE OAK DRIVE
3. TURN LEFT ONTO COLLEGE OAK DRIVE
4. TURN LEFT ONTO MADISON AVENUE
5. TAKE ON-RAMP LOOP TO EB ROUTE 80

TRAFFIC DETOUR PLAN B:

1. CLOSE ON-RAMP FROM WB ROUTE 244 TO WB ROUTE 80 AND WB BUSINESS 80
2. TAKE AUBURN BLVD TO COLLEGE OAK DRIVE
3. TURN LEFT ONTO COLLEGE OAK DRIVE
4. TURN LEFT ONTO MADISON AVENUE
5. TAKE ON-RAMP LOOP TO WB ROUTE 80

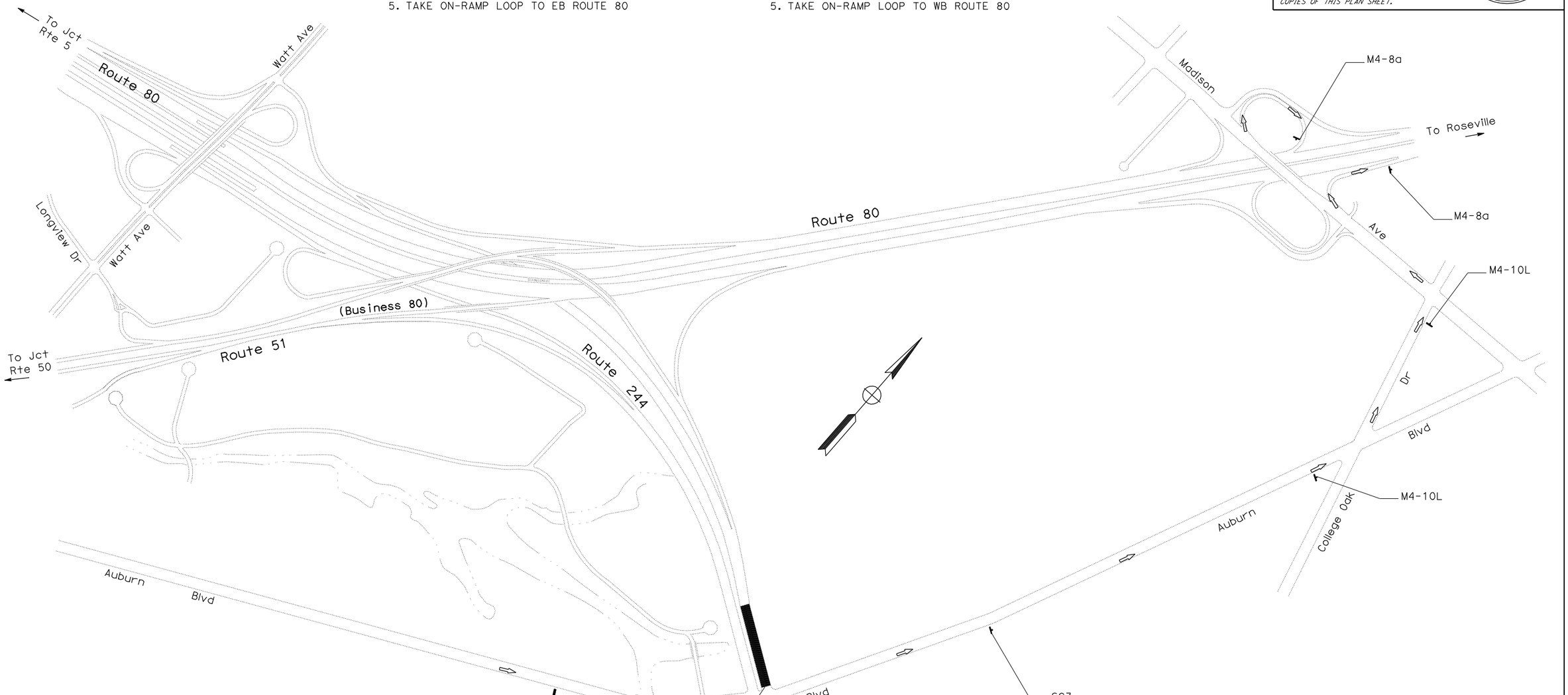

Sign Code		Sign Panel Size (Minimum)	Number of Sign Panels Required
Federal	California		
	SC3	48" X 18"	1
M4-10L	C5 (Lt)	48" X 18"	2
M4-8a	C7	24" X 18"	2

CLOSE WESTBOUND ROUTE 244 (SHEET 2 OF 2)

4 ADDED PER ADDENDUM No. 4 DATED NOVEMBER 16, 2011

DETOUR PLAN

NO SCALE

DE-13

STATE OF CALIFORNIA - DEPARTMENT OF TRANSPORTATION
Caltrans® TRAFFIC DESIGN
FUNCTIONAL SUPERVISOR: LAURIE LAMMERT
CALCULATED-DESIGNED BY: AI K. TRAN
CHECKED BY
REVISED BY
DATE REVISED

LAST REVISION DATE PLOTTED => 15-NOV-2011
TIME PLOTTED => 14:24
00-00-00

BORDER LAST REVISED 7/2/2010
USERNAME => s134507
DGN FILE => 0300020451mg013.dgn
RELATIVE BORDER SCALE IS IN INCHES 0 1 2 3
UNIT 0399
PROJECT NUMBER & PHASE 03000204511

Dist	COUNTY	ROUTE	POST MILES TOTAL PROJECT	SHEET No.	TOTAL SHEETS
03	Sac	80,244	12.5/18.0 0.0/1.1	11N	32

REGISTERED CIVIL ENGINEER — 10-24-11 DATE

6-6-11
PLANS APPROVAL DATE

REGISTERED PROFESSIONAL ENGINEER — AI K. TRAN — No. 64269 — Exp. 6-30-11 — CIVIL — STATE OF CALIFORNIA

THE STATE OF CALIFORNIA OR ITS OFFICERS OR AGENTS SHALL NOT BE RESPONSIBLE FOR THE ACCURACY OR COMPLETENESS OF SCANNED COPIES OF THIS PLAN SHEET.

Sign Code		Sign Panel Size (Minimum)	Number of Sign Panels Required
Federal	California		
M4-10R	C5 (Rt)	48" X 18"	1
M4-8a	C7	24" X 18"	1

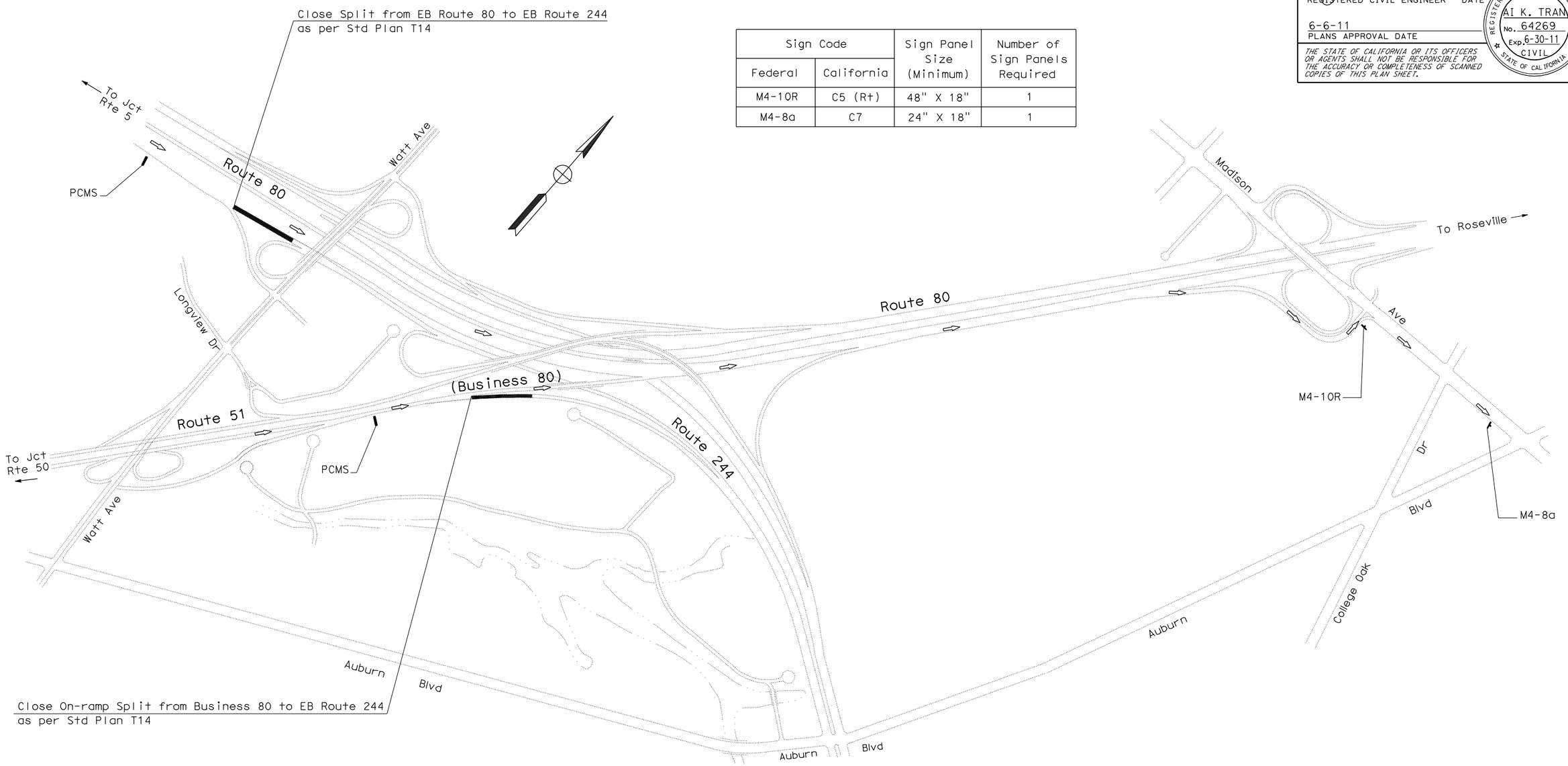

TRAFFIC DETOUR PLAN A:

1. CLOSE ON-RAMP SPLIT FROM EB ROUTE 51 TO EB ROUTE 244
2. TAKE EB ROUTE 80 TO MADISON AVENUE
3. TAKE OFF-RAMP TO MADISON AVENUE
4. TURN RIGHT ONTO MADISON AVENUE
5. KEEP ON MADISON AVENUE TO AUBURN BLVD

TRAFFIC DETOUR PLAN B:

1. CLOSE SPLIT RAMP FROM EB ROUTE 80 TO EB ROUTE 244
2. TAKE EB ROUTE 80 TO MADISON AVENUE
3. TAKE OFF-RAMP TO MADISON AVENUE
4. TURN RIGHT ONTO MADISON AVENUE
5. KEEP ON MADISON AVENUE TO AUBURN BLVD

CLOSE EASTBOUND ROUTE 244 (SHEET 1 OF 2)

4 ADDED PER ADDENDUM No. 4 DATED NOVEMBER 16, 2011

DETOUR PLAN

NO SCALE

DE-14

REVISED BY | DATE REVISED
AI K. TRAN | CALCULATED-DESIGNED BY
CHECKED BY
FUNCTIONAL SUPERVISOR: LAURIE LAMMERT
STATE OF CALIFORNIA - DEPARTMENT OF TRANSPORTATION
Caltrans® TRAFFIC DESIGN

LAST REVISION 00-00-00 | DATE PLOTTED => 15-NOV-2011 | TIME PLOTTED => 14:24

BORDER LAST REVISED 7/2/2010 | USERNAME => s134507 | DGN FILE => 0300020451mg014.dgn | RELATIVE BORDER SCALE IS IN INCHES 0 1 2 3 | UNIT 0399 | PROJECT NUMBER & PHASE 03000204511

Dist	COUNTY	ROUTE	POST MILES TOTAL PROJECT	SHEET No.	TOTAL SHEETS
03	Sac	80,244	12.5/18.0 0.0/1.1	110	32

REGISTERED CIVIL ENGINEER — 10-24-11 DATE

6-6-11
PLANS APPROVAL DATE

AI K. TRAN
No. 64269
Exp. 6-30-11
CIVIL
REGISTERED PROFESSIONAL ENGINEER
STATE OF CALIFORNIA

THE STATE OF CALIFORNIA OR ITS OFFICERS OR AGENTS SHALL NOT BE RESPONSIBLE FOR THE ACCURACY OR COMPLETENESS OF SCANNED COPIES OF THIS PLAN SHEET.

TRAFFIC DETOUR PLAN A:

1. CLOSE ON-RAMP FROM SB WATT AVENUE TO EB ROUTE 244
2. GO STRAIGHT ON WATT AVENUE TO AUBURN BLVD

TRAFFIC DETOUR PLAN B:

1. CLOSE ON-RAMP SPLIT FROM BUSINESS 80 TO EB ROUTE 244
2. TAKE WB OFF-RAMP TO WATT AVENUE
3. TURN LEFT ONTO WATT AVENUE
5. KEEP ON WATT AVENUE TO AUBURN BLVD

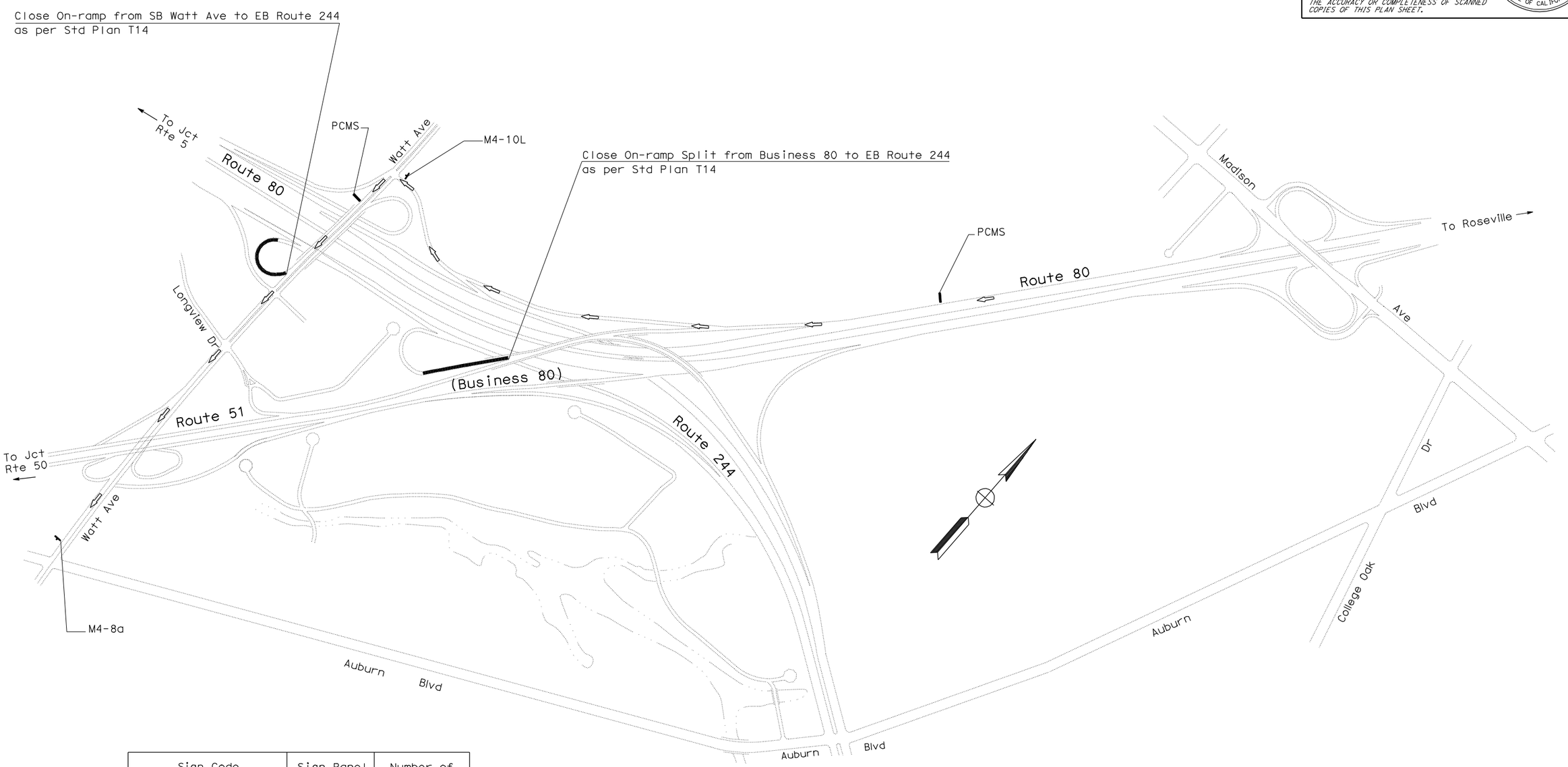

Sign Code		Sign Panel Size (Minimum)	Number of Sign Panels Required
Federal	California		
M4-10L	C5 (Lt)	48" X 18"	1
M4-8a	C7	24" X 18"	1

CLOSE EASTBOUND ROUTE 244 (SHEET 2 OF 2)

4 ADDED PER ADDENDUM No. 4 DATED NOVEMBER 16, 2011

DETOUR PLAN
NO SCALE
DE-15

STATE OF CALIFORNIA - DEPARTMENT OF TRANSPORTATION
TRAFFIC DESIGN
FUNCTIONAL SUPERVISOR: LAURIE LAMMERT
CALCULATED-DESIGNED BY: AI K. TRAN
CHECKED BY
REVISED BY
DATE REVISED

LAST REVISION 00-00-00
DATE PLOTTED => 15-NOV-2011
TIME PLOTTED => 14:24

BORDER LAST REVISED 7/2/2010
USERNAME => s134507
DGN FILE => 0300020451mg015.dgn
RELATIVE BORDER SCALE IS IN INCHES 0 1 2 3
UNIT 0399
PROJECT NUMBER & PHASE 03000204511

Dist	COUNTY	ROUTE	POST MILES TOTAL PROJECT	SHEET No.	TOTAL SHEETS
03	Sac	80,244	12.5/18.0 0.0/1.1	13	32

4

10-24-11
REGISTERED CIVIL ENGINEER DATE

6-6-11
PLANS APPROVAL DATE

REGISTERED PROFESSIONAL ENGINEER
AI K. TRAN
No. 64269
Exp. 6-30-13
CIVIL
STATE OF CALIFORNIA

THE STATE OF CALIFORNIA OR ITS OFFICERS OR AGENTS SHALL NOT BE RESPONSIBLE FOR THE ACCURACY OR COMPLETENESS OF SCANNED COPIES OF THIS PLAN SHEET.

ROADWAY QUANTITIES

ROUTE	NB or SB	PM	DESCRIPTION	COLD PLANE ASPHALT CONCRETE PAVEMENT (SQYD)	ASPHALTIC EMULSION (FOG SEAL COAT) (TON)	CRACK TREATMENT (LNMI)	REPLACE ASPHALT CONCRETE SURFACING (CY)	RUBBERIZED HOT MIX ASPHALT (OPEN GRADED) (TON)	MINOR HOT MIX ASPHALT (TON)	RUBBERIZED HOT MIX ASPHALT (TYPE G) (TON)	TACK COAT (TON)	SEAL JOINT (EXISTING CONCRETE PAVEMENT) (LF)	GRIND EXISTING CONCRETE PAVEMENT (SQYD)	GRIND AND GROOVE EXISTING CONCRETE PAVEMENT (SQYD)	REMOVE ASPHALT CONCRETE DIKE (LF)	PLACE ASPHALT CONCRETE DIKE (TYPE E) (LF)
80	EB	12.79 TO 17.56	MAINLINE		17.5	20.0	470					161,840 ~~102,910~~	5,600	135,600 ~~86,300~~		
	WB	12.91 TO 18.00	MAINLINE		18.5	20.0 ~~13.0~~	500					166,260 ~~64,150~~	6,000	143,800~~141,050~~		
	EB	16.71 TO 16.81	COLD-PLANE AC PAVEMENT ON MAINLINE	3400 ~~2830~~						230	1.2					
	WB	14.41 TO 14.51	COLD-PLANE AC PAVEMENT ON MAINLINE	3400 ~~2830~~						230	1.2					
	EB	12.79 TO 17.56	COLD-PLANE AC ON GORES AND AUXILIARY LANES	11,140						755	4.6					
	WB	12.91 TO 18.00	COLD-PLANE AC ON GORES AND AUXILIARY LANES	12,340						835	5.1					
	EB	16.49 TO 16.86	EASTBOUND ON/OFF RAMPS	6620				445			2.8					
	WB	16.49 TO 16.86	WESTBOUND ON/OFF RAMPS	5120				345			2.2					
244	EB	0.00 TO 1.10	MAINLINE	560	3.5	3.0				40	0.2	21,025 ~~14,640~~	15,870 ~~1,670~~	~~14,200~~		
	WB	0.00 TO 1.10	MAINLINE	5450	1.5	2.0	380		20	370 ~~390~~	2.3	13,630 ~~9490~~	21,960	~~21,960~~	750	750
TOTAL				48,030 ~~46,890~~	41.0	45.0 ~~38.0~~	1,350	790	20	2,460 ~~2,400~~	19.6	362,755 ~~191,190~~	49,430 ~~13,270~~	279,400~~263,510~~	750	750

4 ADDED PER ADDENDUM No. 4 DATED NOVEMBER 16, 2011

SUMMARY OF QUANTITIES

Q-1

AI K. TRAN | REVISED BY | DATE REVISED
CALCULATED-DESIGNED BY | CHECKED BY
FUNCTIONAL SUPERVISOR: LAURIE LAMMERT
STATE OF CALIFORNIA - DEPARTMENT OF TRANSPORTATION
Caltrans® TRAFFIC DESIGN

LAST REVISION 00-00-00 | DATE PLOTTED => 15-NOV-2011 | TIME PLOTTED => 14:24

BORDER LAST REVISED 7/2/2010 | USERNAME => s134507 | DGN FILE => 0300020451pa001.dgn | RELATIVE BORDER SCALE IS IN INCHES 0 1 2 3 | UNIT 0399 | PROJECT NUMBER & PHASE 03000204511