Dist	COUNTY	ROUTE	POST MILES TOTAL PROJECT	SHEET No.	TOTAL SHEETS
03	Pla	65	R15.1/R19.9	2	189

Leobardo Morales 9-1-11
REGISTERED CIVIL ENGINEER DATE

9-26-11
PLANS APPROVAL DATE

REGISTERED PROFESSIONAL ENGINEER LEOBARDO MORALES No. C72023 Exp. 6-30-12 CIVIL STATE OF CALIFORNIA

THE STATE OF CALIFORNIA OR ITS OFFICERS OR AGENTS SHALL NOT BE RESPONSIBLE FOR THE ACCURACY OR COMPLETENESS OF SCANNED COPIES OF THIS PLAN SHEET.

LEGEND:

(No.) SEE NOTE

NOTES:

1. DIMENSIONS OF THE PAVEMENT STRUCTURES (STRUCTURAL SECTIONS) ARE SUBJECT TO TOLERANCES SPECIFIED IN THE STANDARD SPECIFICATIONS.
2. SUPERELEVATION AS SHOWN ON THE SUPERELEVATION DIAGRAMS.
3. FOR R/W LOCATION, SEE LAYOUT PLAN.
4. FOR MBGR, SEE LAYOUT PLAN.
5. EXISTING CENTERLINE RUMBLE STRIP.
6. EXISTING SHOULDER RUMBLE STRIP.
7. SHOULDER RUMBLE STRIP GROUND IN (FOR LOCATION, SEE LAYOUT PLAN).
8. CENTERLINE RUMBLE STRIP (FOR LOCATION, SEE LAYOUT PLAN).
9. SEE TYPICAL SECTION "D13L2" 881+25 TO 888+50.

TYPICAL PAVEMENT STRUCTURAL SECTIONS

1 — Exist
0.20' RAC, (TYPE G)
0.45' AC (TYPE A)
1.05' CLASS 2 AB
1.40' CLASS 2 AS

2 — Exist
1.65' CLASS 2 AB
1.40' CLASS 2 AS

3 — 0.10' RHMA-O
0.20' RHMA-G
0.45' HMA-A
2.45' CLASS 2 AB

4 — IMPORTED MATERIAL-(SHOULDER BACKING)
VARIES 0.5' TO 0.0'

5 — COLD PLANE 0.20' RAC (TYPE G)
0.10' RHMA-O
0.20' RHMA-G

6 — COLD PLANE 0.20' RAC (TYPE G)
0.20' RHMA-G

7 — Exist
1.0' CLASS 2 AB
TYPE B WOVEN RSP FABRIC
0.75' BACKING No. 3 RSP (METHOD B)
1/4T RSP (METHOD B), SEE NOTE 9

8 — 1.0' CLASS 2 AB
RSP FABRIC
0.75' RSP (BACKING No. 3, METHOD B)
5.0' 1/4T RSP (METHOD B)

ABBREVIATIONS:

RHMA-O	RUBBERIZED HOT MIX ASPHALT (OPEN GRADED)
RAC	RUBBERIZED ASPHALT CONCRETE
RHMA-G	RUBBERIZED HOT MIX ASPHALT (GAP GRADED)

ROUTE 65 DESIGN DESIGNATION

ADT (2015)	42,900	D	58%
ADT (2035)	75,900	T	5%
		V	80 mph
		TI_{20}	13.0

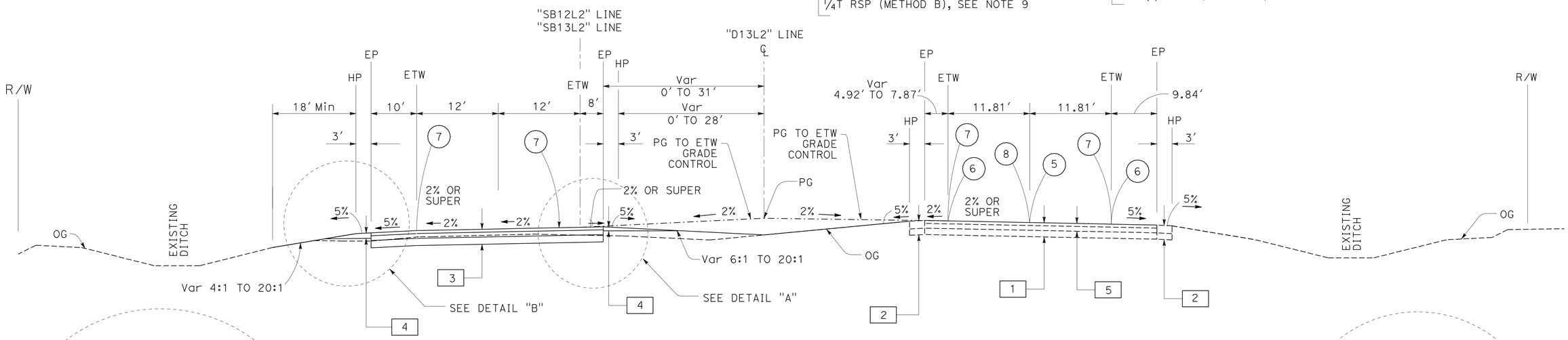

SOUTHBOUND

"SB12L2" 830+25.734 TO "SB12L2" 849+59.376
"D13L2" 849+49.784 TO "D13L2" 883+65.590
"D13L2" 885+97.470 TO "D13L2" 933+62.860
"D13L2" 934+12.070 TO "D13L2" 1001+90.088
"SB13L2" 1001+90.088 TO "SB13L2" 1026+57.340

NORTHBOUND

"D13L2" 821+90.013 TO "D13L2" 882+97.057
"D13L2" 885+64.851 TO "D13L2" 933+62.670
"D13L2" 934+11.882 TO "D13L2" 1026+75.820

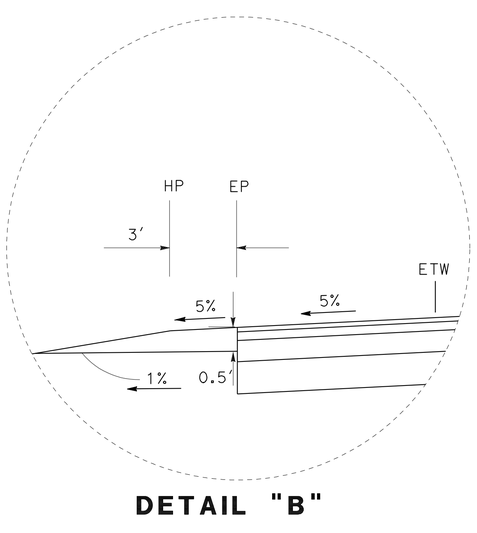

DETAIL "B"

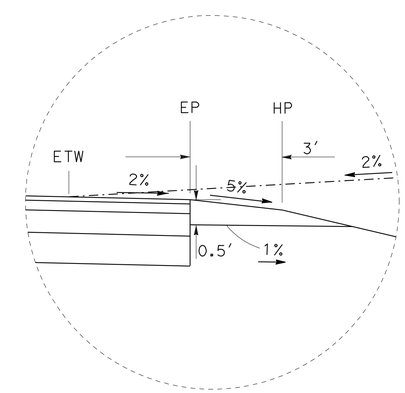

DETAIL "A"

ROUTE 65

TYPICAL CROSS SECTIONS
NO SCALE

1 REVISED PER ADDENDUM No. 1 DATED MARCH 21, 2012

X-1

STATE OF CALIFORNIA - DEPARTMENT OF TRANSPORTATION
Caltrans® NORTH REGION DIVISION OF ENGINEERING

FUNCTIONAL SUPERVISOR: NESAR FORMOLI
CALCULATED-DESIGNED BY: L. MORALES
CHECKED BY: N. FORMOLI
REVISED BY
DATE REVISED

LAST REVISION 06-01-11
DATE PLOTTED => 20-MAR-2012
TIME PLOTTED => 10:14

Dist	COUNTY	ROUTE	POST MILES TOTAL PROJECT	SHEET No.	TOTAL SHEETS
03	Pla	65	R15.1/R19.9	3	189

1

Leobardo Morales 9-1-11
REGISTERED CIVIL ENGINEER DATE

9-26-11
PLANS APPROVAL DATE

REGISTERED PROFESSIONAL ENGINEER
LEOBARDO MORALES
No. C72023
Exp. 6-30-12
CIVIL
STATE OF CALIFORNIA

THE STATE OF CALIFORNIA OR ITS OFFICERS OR AGENTS SHALL NOT BE RESPONSIBLE FOR THE ACCURACY OR COMPLETENESS OF SCANNED COPIES OF THIS PLAN SHEET.

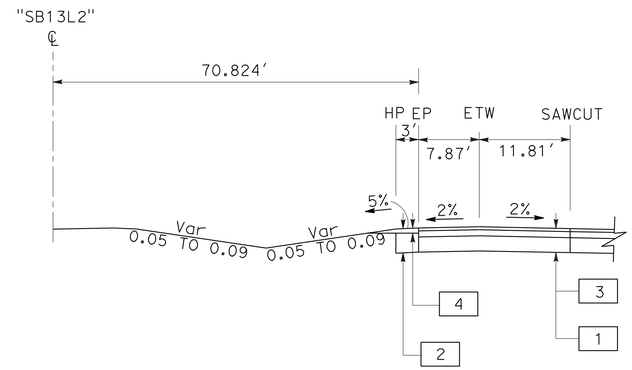

"SB13L2" 1001+90.09 TO "SB13L2" 1013+94.52

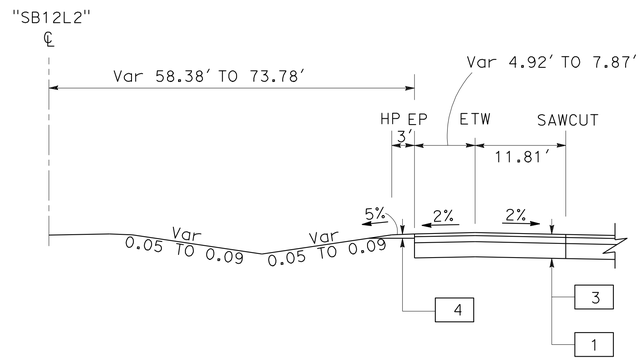

"SB12L2" 832+92.08 TO "SB12L2" 849+59.38

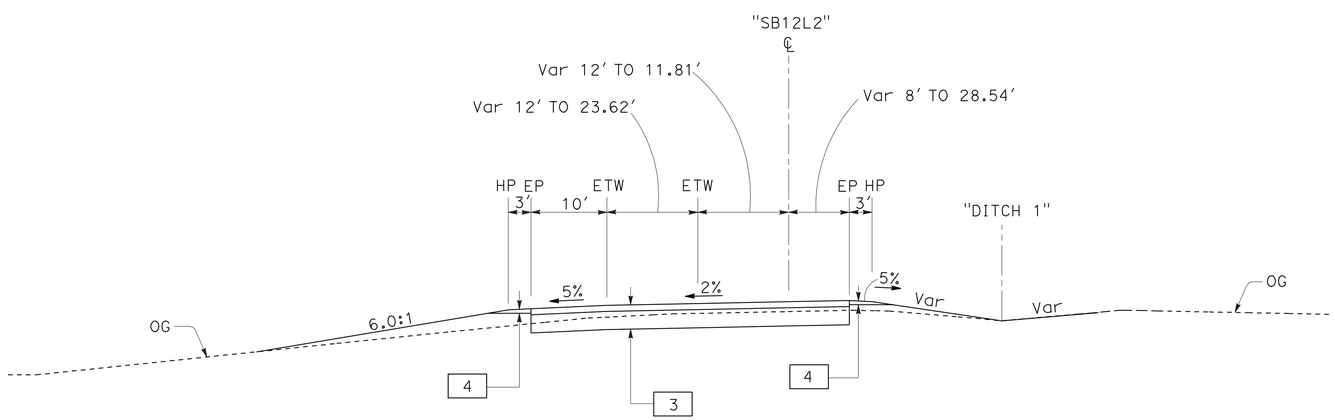

"SB12L2" 826+77.000 TO "SB12L2" 830+25.734

ROUTE 65

TYPICAL CROSS SECTIONS
NO SCALE

1 **REVISED PER ADDENDUM No. 1 DATED MARCH 21, 2012**

X-2

STATE OF CALIFORNIA - DEPARTMENT OF TRANSPORTATION
Caltrans® NORTH REGION DIVISION OF ENGINEERING

FUNCTIONAL SUPERVISOR: NESAR FORMOLI
CALCULATED-DESIGNED BY: L. MORALES
CHECKED BY: N. FORMOLI
REVISED BY
DATE REVISED

LAST REVISION 06-01-11 | DATE PLOTTED => 20-MAR-2012 | TIME PLOTTED => 10:14

Dist	COUNTY	ROUTE	POST MILES TOTAL PROJECT	SHEET No.	TOTAL SHEETS
03	Pla	65	R15.1/R19.9	4A	189

1

Leobardo Morales 9-1-11
REGISTERED CIVIL ENGINEER DATE

9-26-11
PLANS APPROVAL DATE

REGISTERED PROFESSIONAL ENGINEER
LEOBARDO MORALES
No. C72023
Exp. 6-30-12
CIVIL
STATE OF CALIFORNIA

THE STATE OF CALIFORNIA OR ITS OFFICERS OR AGENTS SHALL NOT BE RESPONSIBLE FOR THE ACCURACY OR COMPLETENESS OF SCANNED COPIES OF THIS PLAN SHEET.

NOTES:

1. EXISTING THICKNESS VARIES FROM 0.0' TO 5.0'.
2. FOR R/W LOCATION, SEE LAYOUT PLAN.

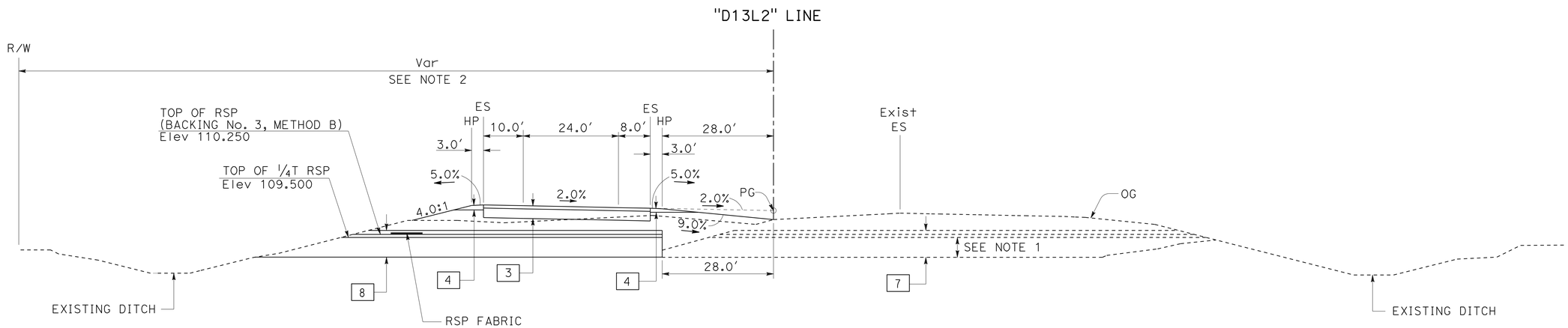

"D13L2" 881+25 TO 883+25
"D13L2" 886+50 TO 888+50

1 ADDED PER ADDENDUM No. 1 DATED MARCH 21, 2012

TYPICAL CROSS SECTIONS

NO SCALE

X-4

STATE OF CALIFORNIA - DEPARTMENT OF TRANSPORTATION
Caltrans NORTH REGION DIVISION OF ENGINEERING

FUNCTIONAL SUPERVISOR: NESAR FORMOLI
CALCULATED-DESIGNED BY: L. MORALES
CHECKED BY: N. FORMOLI
REVISED BY
DATE REVISED

LAST REVISION DATE PLOTTED => 20-MAR-2012
06-01-11 TIME PLOTTED => 10:14

Dist	COUNTY	ROUTE	POST MILES TOTAL PROJECT	SHEET No.	TOTAL SHEETS
03	Pla	65	R15.1/R19.9	13	189

Leobardo Morales 9-1-11
REGISTERED CIVIL ENGINEER DATE

9-26-11
PLANS APPROVAL DATE

REGISTERED PROFESSIONAL ENGINEER
LEOBARDO MORALES
No. C72023
Exp. 6-30-12
CIVIL
STATE OF CALIFORNIA

THE STATE OF CALIFORNIA OR ITS OFFICERS OR AGENTS SHALL NOT BE RESPONSIBLE FOR THE ACCURACY OR COMPLETENESS OF SCANNED COPIES OF THIS PLAN SHEET.

NOTE:

FOR ACCURATE RIGHT OF WAY DATA, CONTACT RIGHT OF WAY ENGINEERING AT THE DISTRICT OFFICE.

CURVE DATA

No. ③	R	Δ	T	L
3	5000′	88°34′07″	4876.61′	7729.06′

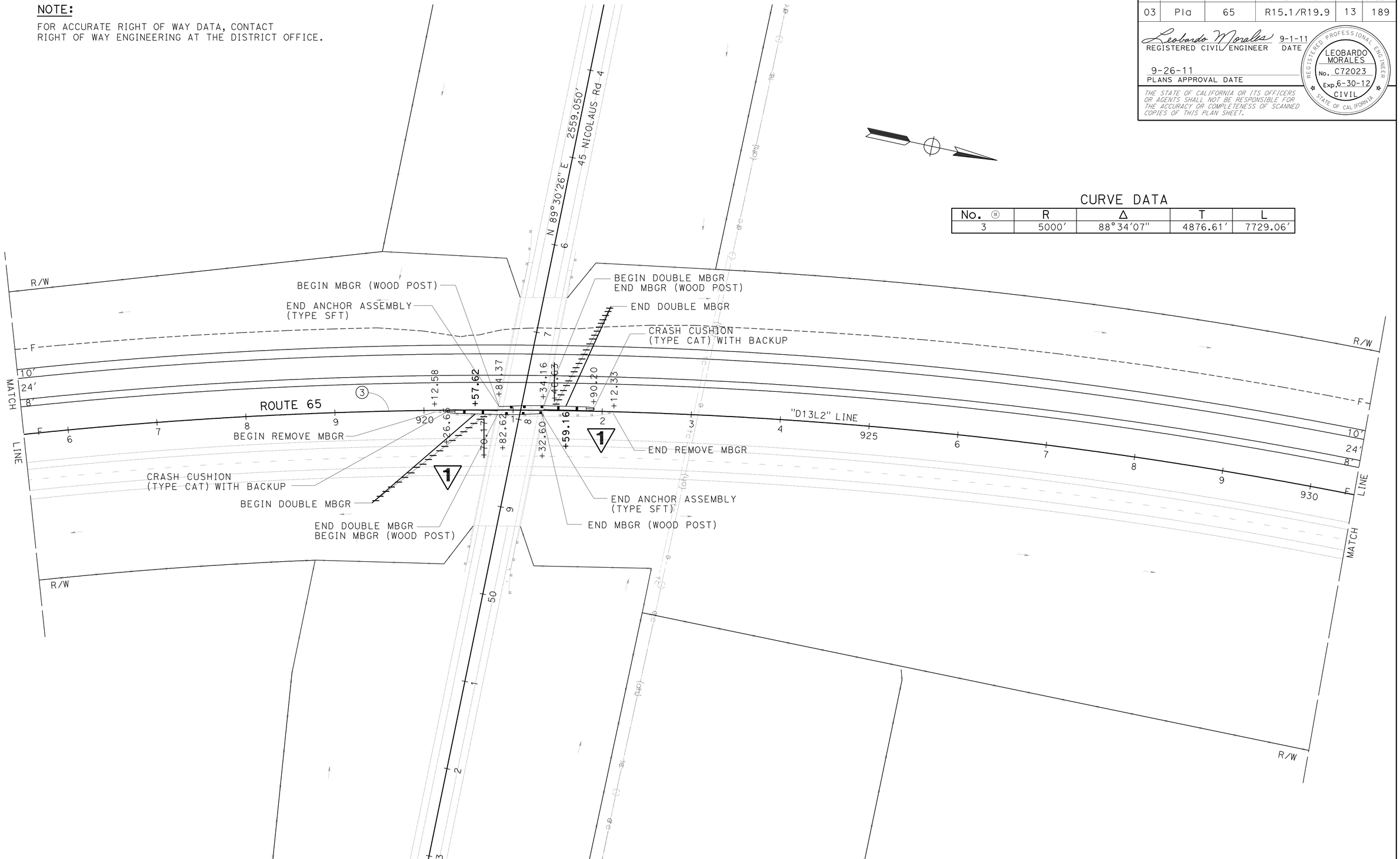

LAYOUT
SCALE: 1″ = 50′

1 REVISED PER ADDENDUM No. 1 DATED MARCH 21, 2012

L-9

STATE OF CALIFORNIA - DEPARTMENT OF TRANSPORTATION
Caltrans NORTH REGION DIVISION OF ENGINEERING

FUNCTIONAL SUPERVISOR: NESAR FORMOLI
CALCULATED-DESIGNED BY: L. MORALES
CHECKED BY: N. FORMOLI
REVISED BY
DATE REVISED

LAST REVISION 06-01-11
DATE PLOTTED => 20-MAR-2012
TIME PLOTTED => 10:14

Dist	COUNTY	ROUTE	POST MILES TOTAL PROJECT	SHEET No.	TOTAL SHEETS
03	Pla	65	R15.1/R19.9	19	189

Leobardo Morales 9-1-11
REGISTERED CIVIL ENGINEER DATE

9-26-11
PLANS APPROVAL DATE

REGISTERED PROFESSIONAL ENGINEER LEOBARDO MORALES No. C72023 Exp. 6-30-12 CIVIL STATE OF CALIFORNIA

THE STATE OF CALIFORNIA OR ITS OFFICERS OR AGENTS SHALL NOT BE RESPONSIBLE FOR THE ACCURACY OR COMPLETENESS OF SCANNED COPIES OF THIS PLAN SHEET.

1

NOTE:

FOR ACCURATE RIGHT OF WAY DATA, CONTACT RIGHT OF WAY ENGINEERING AT THE DISTRICT OFFICE.

CURVE DATA

No. ⊕	R	Δ	T	L
4	10000′	2°51′53″	250.05′	500.00′

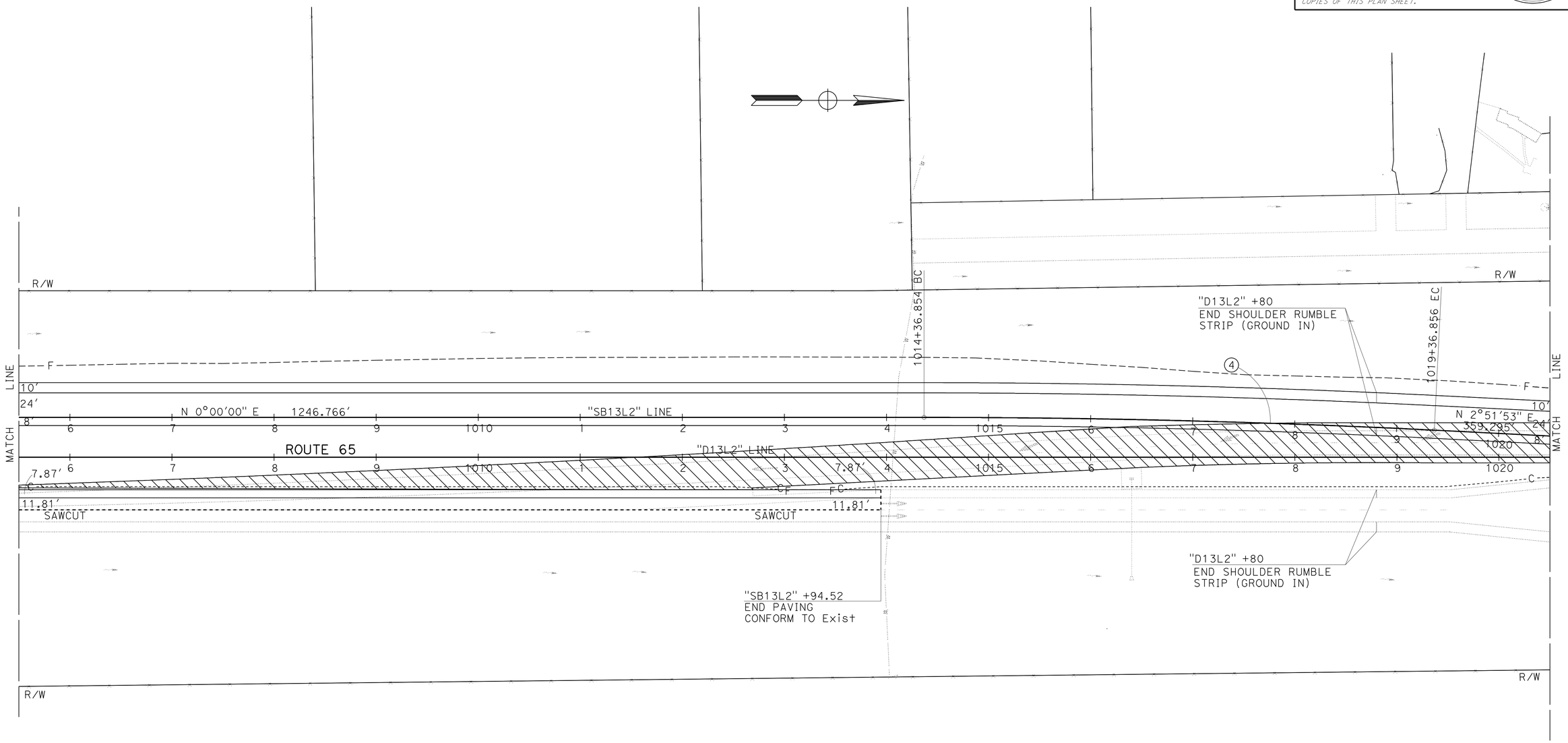

1 **REVISED PER ADDENDUM No. 1 DATED MARCH 21, 2012**

LAYOUT
SCALE: 1" = 50′

L-15

STATE OF CALIFORNIA - DEPARTMENT OF TRANSPORTATION
Caltrans NORTH REGION DIVISION OF ENGINEERING

FUNCTIONAL SUPERVISOR: NESAR FORMOLI

CALCULATED-DESIGNED BY: L. MORALES
CHECKED BY: N. FORMOLI

REVISED BY
DATE REVISED

LAST REVISION 06-01-11 | DATE PLOTTED => 20-MAR-2012 | TIME PLOTTED => 10:14

Dist	COUNTY	ROUTE	POST MILES TOTAL PROJECT	SHEET No.	TOTAL SHEETS
03	Pla	65	R15.1/R19.9	49A	189

1

Leobardo Morales 9-1-11
REGISTERED CIVIL ENGINEER DATE

9-26-11
PLANS APPROVAL DATE

REGISTERED PROFESSIONAL ENGINEER
LEOBARDO MORALES
No. C72023
Exp. 6-30-12
CIVIL
STATE OF CALIFORNIA

THE STATE OF CALIFORNIA OR ITS OFFICERS OR AGENTS SHALL NOT BE RESPONSIBLE FOR THE ACCURACY OR COMPLETENESS OF SCANNED COPIES OF THIS PLAN SHEET.

NOTES:

1. SEE EROSION CONTROL DETAILS SHEETS (ECD-3 AND ECD-4) FOR TEMPORARY SILT FENCE LOCATION ALONG NICOLAUS ACCESS ROAD.

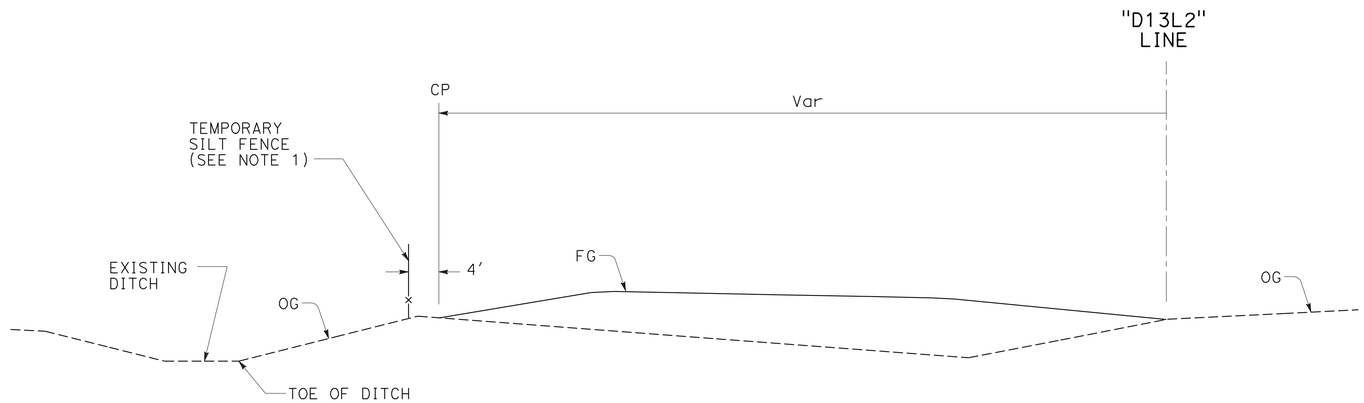

NICOLAUS Rd ACCESS
TEMPORARY SILT FENCE TYPICAL SECTION

"D13L2" STA 888+00.00 TO "D13L2" STA 933+60.00

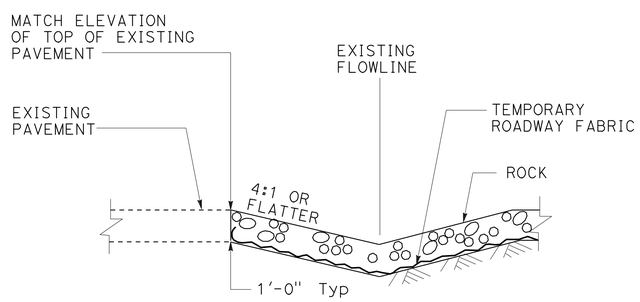

SECTION
CONFORM DETAIL

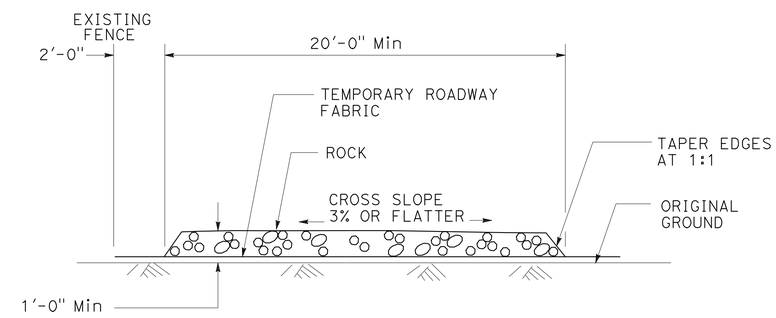

SECTION
TEMPORARY CONSTRUCTION ROADWAY

1 ADDED PER ADDENDUM No. 1 DATED MARCH 21, 2012

APPROVED FOR EROSION CONTROL WORK ONLY

EROSION CONTROL DETAILS
NO SCALE

ECD-2

STATE OF CALIFORNIA - DEPARTMENT OF TRANSPORTATION
Caltrans® NORTH REGION DIVISION OF ENGINEERING

FUNCTIONAL SUPERVISOR: NESAR FORMOLI
CALCULATED-DESIGNED BY: L. MORALES
CHECKED BY: N. FORMOLI
REVISED BY
DATE REVISED

LAST REVISION 03-01-12
DATE PLOTTED => 20-MAR-2012
TIME PLOTTED => 10:14

Dist	COUNTY	ROUTE	POST MILES TOTAL PROJECT	SHEET No.	TOTAL SHEETS
03	Pla	65	R15.1/R19.9	49B	189

Leobardo Morales 9-1-11
REGISTERED CIVIL ENGINEER DATE

9-26-11
PLANS APPROVAL DATE

REGISTERED PROFESSIONAL ENGINEER
LEOBARDO MORALES
No. C72023
Exp. 6-30-12
CIVIL
STATE OF CALIFORNIA

THE STATE OF CALIFORNIA OR ITS OFFICERS OR AGENTS SHALL NOT BE RESPONSIBLE FOR THE ACCURACY OR COMPLETENESS OF SCANNED COPIES OF THIS PLAN SHEET.

1

LEGEND:

—xx——TSF——xx— TEMPORARY SILT FENCE

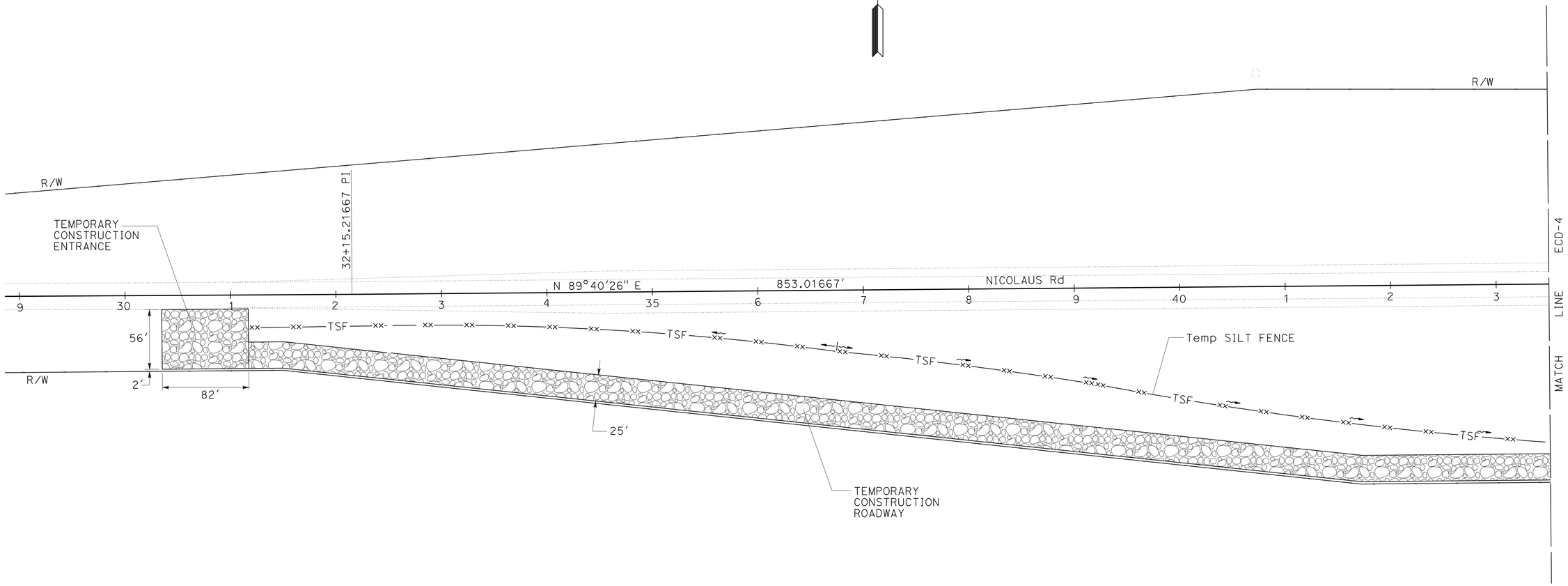

1 **ADDED PER ADDENDUM No. 1 DATED MARCH 21, 2012**

APPROVED FOR EROSION CONTROL WORK ONLY

NICOLAUS Rd ACCESS

EROSION CONTROL DETAILS

NO SCALE

ECD-3

STATE OF CALIFORNIA - DEPARTMENT OF TRANSPORTATION
Caltrans
NORTH REGION
DIVISION OF ENGINEERING

FUNCTIONAL SUPERVISOR: NESAR FORMOLI

CALCULATED-DESIGNED BY: L. MORALES
CHECKED BY: N. FORMOLI

REVISED BY
DATE REVISED

LAST REVISION 03-05-12
DATE PLOTTED => 20-MAR-2012
TIME PLOTTED => 10:15

Dist	COUNTY	ROUTE	POST MILES TOTAL PROJECT	SHEET No.	TOTAL SHEETS
03	Pla	65	R15.1/R19.9	49C	189

Leobardo Morales 9-1-11
REGISTERED CIVIL ENGINEER DATE

9-26-11
PLANS APPROVAL DATE

REGISTERED PROFESSIONAL ENGINEER
LEOBARDO MORALES
No. C72023
Exp. 6-30-12
CIVIL
STATE OF CALIFORNIA

THE STATE OF CALIFORNIA OR ITS OFFICERS OR AGENTS SHALL NOT BE RESPONSIBLE FOR THE ACCURACY OR COMPLETENESS OF SCANNED COPIES OF THIS PLAN SHEET.

1

NOTES:

1. SEE EROSION CONTROL DETAILS SHEET ECD-2 FOR TEMPORARY SILT FENCE LIMITS ALONG "D13L2" LINE.
2. FENCE TO BE REPLACED WHEN WORK IS COMPLETE.

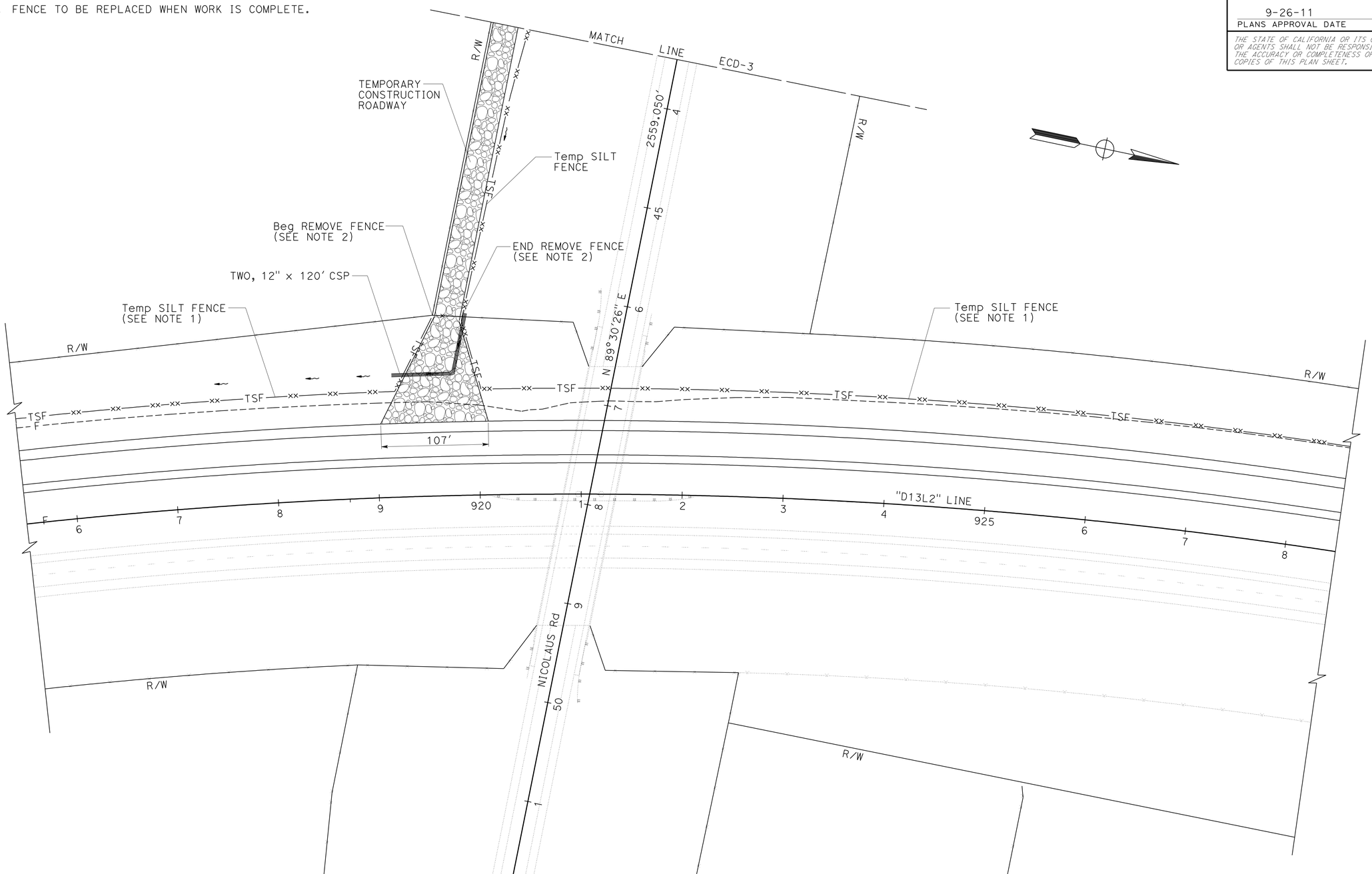

NICOLAUS Rd ACCESS
EROSION CONTROL DETAILS

NO SCALE

ECD-4

1 REVISED PER ADDENDUM No. 1 DATED MARCH 21, 2012

APPROVED FOR EROSION CONTROL WORK ONLY

STATE OF CALIFORNIA - DEPARTMENT OF TRANSPORTATION
Caltrans NORTH REGION DIVISION OF ENGINEERING

FUNCTIONAL SUPERVISOR: NESAR FORMOLI
CALCULATED-DESIGNED BY: L. MORALES
CHECKED BY: N. FORMOLI
REVISED BY
DATE REVISED

LAST REVISION 03-05-12
DATE PLOTTED => 20-MAR-2012
TIME PLOTTED => 10:15

Dist	COUNTY	ROUTE	POST MILES TOTAL PROJECT	SHEET No.	TOTAL SHEETS
03	Pla	65	R15.1/R19.9	67	189

Leobardo Morales 9-1-11
REGISTERED CIVIL ENGINEER DATE

9-26-11
PLANS APPROVAL DATE

REGISTERED PROFESSIONAL ENGINEER LEOBARDO MORALES No. C72023 Exp. 6-30-12 CIVIL STATE OF CALIFORNIA

THE STATE OF CALIFORNIA OR ITS OFFICERS OR AGENTS SHALL NOT BE RESPONSIBLE FOR THE ACCURACY OR COMPLETENESS OF SCANNED COPIES OF THIS PLAN SHEET.

NOTES:

1. FOR ALLOWABLE ALTERNATIVES FOR APC, SEE DRAINAGE DETAILS.
2. ALL JOINTS ARE STANDARD JOINT TYPE.

DRAINAGE QUANTITIES

DRAINAGE SHEET No.	DRAINAGE SYSTEM No. ⬡	DRAINAGE UNIT ○	REMOVE CONCRETE Misc, PCC APRON	ABANDON CULVERT	REMOVE CULVERT	REMOVE INLET	MARKER (CULVERT)	24" ALTERNATIVE PIPE CULVERT	24" REINFORCED CONCRETE PIPE	24" CONCRETE FES	MISCELLANEOUS IRON AND STEEL	MINOR CONCRETE (MINOR STRUCTURE)	MINOR CONCRETE (BACKFILL)	(N) HEIGHT OF INLET	(N) HEIGHT OF COVER	DESCRIPTION	STATION	DRAINAGE SHEET No.	DRAINAGE SYSTEM No. ⬡	DRAINAGE UNIT ○
			CY	LF	LF	EA	EA	LF	LF	EA	LB	CY	CY	FT	FT					
D-2	1	a	5.3													REMOVE PCC APRON	"SB12L2" 837+39.70	D-2	1	a
		b				1										REMOVE INLET				b
		c		74												ABANDON CULVERT				c
D-2	2	a									634	2.15		4.64		Mod GDO DI, GRATE TYPE 24-12	"SB12L2" 843+84.93	D-2	2	a
		b			2.95											REMOVE CULVERT				b
		c										5.5				PCC APRON (TYPE J)				c
		d											1.5			MINOR CONCRETE (BACKFILL)				d
D-4	3	a										5.5				PCC APRON (TYPE J)	"D13L2" 875+15.00	D-4	3	a
		b									634	2.10		4.50		Mod GDO DI, GRATE TYPE 24-12				b
		c					1		127.0							24" x 127.0' RCP				c
		d								1						24" CONCRETE FES				d
D-5	4	a									634	2.52		5.80		Mod GDO DI, GRATE TYPE 24-12	"D13L2" 913+49.32	D-5	4	a
		b			2.95											REMOVE CULVERT				b
		c										5.5				PCC APRON (TYPE J)				c
D-6	5	a										5.5				PCC APRON (TYPE J)	"D13L2" 932+50.00	D-6	5	a
		b									634	2.10		4.50		Mod GDO DI, GRATE TYPE 24-12				b
		c					1		120.0							24" x 120.0' RCP				c
		d								1						24" CONCRETE FES				d
D-6	6	a									634	2.11		4.52		Mod GDO DI, GRATE TYPE 24-12	"D13L2" 941+92.72	D-6	6	a
		b			2.95											REMOVE CULVERT				b
		c										5.5				PCC APRON (TYPE J)				c
		d											7.9			MINOR CONCRETE (BACKFILL)				d
D-7	7	a										5.5				PCC APRON (TYPE J)	"D13L2" 958+00.00	D-7	7	a
		b									634	2.10		4.50		Mod GDO DI, GRATE TYPE 24-12				b
		c					1		102.0							24" x 102.0' RCP				c
		d								1						24" CONCRETE FES				d
		e											1.5			MINOR CONCRETE (BACKFILL)				e
D-8	8	a										5.5				PCC APRON (TYPE J)	"D13L2" 984+00.00	D-8	8	a
		b									634	2.10		4.50		Mod GDO DI, GRATE TYPE 24-12				b
		c					1		120.0							24" x 120.0' RCP				c
		d								1						24" CONCRETE FES				d
D-10	9	a	5.3													REMOVE PCC APRON	"SB13L2" 1016+40.44	D-10	9	a
		b				1										REMOVE EXISTING INLET				b
		c						21.0								24" x 21.0' APC				c
		d									634	1.80		3.52		Mod GDO DI, GRATE TYPE 24-12				d
		e										5.5				PCC APRON (TYPE J)				e
			10.6	74	8.9	2	4	21.0	469	4	5072	61.0	10.9			TOTAL				

(N) - NOT A SEPARATE PAY ITEM, FOR INFORMATION ONLY

ROCK SLOPE PROTECTION 1

STATION	ROCK SLOPE PROTECTION (BACKING No. 3, METHOD B)	ROCK SLOPE PROTECTION (1/4 TON, METHOD B)	ROCK SLOPE PROTECTION FABRIC
	CY	CY	SQYD
"D13L2" 881+50 TO 884+60		1325	1590
"D13L2" 885+50 TO 888+46		1105	1326
"D13L2" 881+25 TO 883+25	447	3417	1889
"D13L2" 886+50 TO 888+50	473	3580	1889
TOTAL	920	9427	6694

1 REVISED PER ADDENDUM No. 1 DATED MARCH 21, 2012

DRAINAGE QUANTITIES DQ-1

STATE OF CALIFORNIA - DEPARTMENT OF TRANSPORTATION
Caltrans NORTH REGION DIVISION OF ENGINEERING

FUNCTIONAL SUPERVISOR: NESAR FORMOLI
CALCULATED-DESIGNED BY: L. MORALES
CHECKED BY: N. FORMOLI
REVISED BY
DATE REVISED

LAST REVISION 06-01-11
DATE PLOTTED => 20-MAR-2012
TIME PLOTTED => 10:15

Dist	COUNTY	ROUTE	POST MILES TOTAL PROJECT	SHEET No.	TOTAL SHEETS
03	Pla	65	R15.1/R19.9	69	189

Leobardo Morales 9-1-11
REGISTERED CIVIL ENGINEER DATE

9-26-11
PLANS APPROVAL DATE

REGISTERED PROFESSIONAL ENGINEER LEOBARDO MORALES No. C72023 Exp. 6-30-12 CIVIL STATE OF CALIFORNIA

THE STATE OF CALIFORNIA OR ITS OFFICERS OR AGENTS SHALL NOT BE RESPONSIBLE FOR THE ACCURACY OR COMPLETENESS OF SCANNED COPIES OF THIS PLAN SHEET.

LEGEND:

- CONSTRUCT THIS STAGE
- LIMIT OF STRIPING PATTERN
- DIRECTION OF TRAFFIC
- TYPE III BARRICADE
- CHANNELIZER (SURFACE MOUNTED)

NOTES:

1. INDEX NOTES DO NOT REPRESENT AN ORDER OF WORK AS INDICATED.
2. SAW CUTTING OF EXISTING PAVEMENT MAY NEED TO BE COMPLETED PRIOR TO PLACEMENT OF TEMPORARY RAILING (TYPE K).
3. LOCATIONS WITH NO IMPACT TO THE EXISTING TRAFFIC MUST BE COMPLETED FIRST.
4. CONTRACTOR SHALL PROVIDE TEMPORARY PUBLIC ACCESS TO DRIVEWAYS AND ROADWAY CONNECTIONS THROUGH WORK AT ALL TIMES.
5. TEMPORARY RAILING (TYPE K) END TAPER 10:1 OR FLATTER. EXPOSED END OF TEMPORARY RAILING (TYPE K) SHOWN BELOW IS 15 FEET MINIMUM FROM APPROACH ETW.
6. EXCEPTION: AS DETERMINED BY THE RESIDENT ENGINEER, EMBANKMENT CAN BE CONSTRUCTED ANYTIME UP TO SUBGRADE OF AB OR EXISTING HINGE POINT ELEVATION (WHICHEVER IS LOWER) AND GRADED SO THAT STORM WATER SHEETS AWAY FROM TRAFFIC.
7. ALL CHANNELZIERS (SURFACE MOUNTED) SHALL BE INSTALLED ON 50 FEET CENTERS UNLESS OTHERWISE SHOWN.
8. FOR ADDITIONAL CONSTRUCTION AREA SIGNS, SEE SHEETS CS-1 AND TRAFFIC HANDLING PLANS.
9. ALL SIGN CODES SHOWN ARE FEDERAL SIGN CODES UNLESS OTHERWISE DESIGNATED AS CALIFORNIA CODES.

MAJOR WORK CATEGORIES STAGE 1

DRAINAGE
"SB12L2" LINE CONSTRUCTION
"D13L2" LINE CONSTRUCTION
"SB13L2" LINE CONSTRUCTION

STAGE 1

THE INTENT OF THIS STAGE IS TO CONSTRUCT THE SOUTHBOUND LANES AND TWO BRIDGES WITH NO IMPACT TO EXISTING TRAFFIC CONDITIONS, CONSTRUCT "SB12L2" LINE, "D13L2" LINE, AND "SB13L2".

STAGE 1 CONSTRUCTION (WORK TO BE PERFORMED):

1 (A1) CONSTRUCT BMPS NECESSARY FOR SITE ACCESS FROM NICOLAUS ROAD.

1 (A2) BEGIN CONSTRUCTION OF SOUTHBOUND LANES, FROM STA. "D13L2" 875+00 TO STA. "D13L2" 938+00, INCLUDING DRAINAGE SYSTEMS 3 TO 5.

(A3) CONSTRUCT MARKHAM RAVINE BRIDGE Br No. 19-0192L.

(A4) CONSTRUCT LINCOLN AIRPORT CREEK BRIDGE Br No. 19-0194L.

1 (A5) WHEN ALLOWED BY THE SPECIAL PROVISIONS, BEGIN CONSTRUCTION OF SOUTHBOUND LANES FROM STA. "SB12L2" 835+45.6 TO STA. "SB12L2" 849+59.376 AND FROM STA. "D13L2" 849+49.784 TO STA. "D13L2" 875+00 AND FROM STA. "D13L2" 938+00 TO STA. "D13L2" 1001+90.088 AND FROM STA. "SB13L2" 1001+90.088 TO STA. "SB13L2" 1014+65.3., INCLUDING DRAINAGE SYSTEMS 1, 2, 6, 7, AND 8.

1 (A6) CONSTRUCT MBGR.

MAJOR WORK CATEGORIES STAGE 2

DRAINAGE
"SB12L2" LINE CONSTRUCTION
"SB13L2" LINE CONSTRUCTION

STAGE 2

THE INTENT OF THIS STAGE IS TO CONSTRUCT THE REMAINING PORTION OF THE SOUTHBOUND LANES AND CONFORM TO THE EXISTING HIGHWAY.

STAGE 2 CONSTRUCTION (WORK TO BE PERFORMED):

(B1) PLACE TEMPORARY RAILING (TYPE K), AND TEMPORARY CRASH CUSHIONS (ABSORB 350).

(B2) PLACE CHANNELIZERS (SURFACE MOUNTED).

(B3) REMOVE BASE AND SURFACING OF EXISTING ROADWAY.

(B4) CONTINUE CONSTRUCTION OF SOUTHBOUND LANES, FROM STATION "SB12L2" 826+77.00 TO "SB12L2" 835+45.6 AND FROM "SB13L2" 1014+65.3 TO "SB13L2" 1026+57.34

(B5) CONSTRUCT ALL UNITS OF DRAINAGE SYSTEM 9.

MAJOR WORK CATEGORIES STAGE 3

OPEN THE SOUTHBOUND LANES TO TRAFFIC

CONSTRUCT PAVING OF THE NORTHBOUND INSIDE SHOULDER AND No. 1 LANE

COLD PLANE THE NORTHBOUND LANES TO REMOVE CENTERLINE AND SHOULDER RUMBLE STRIP

PLACE FINAL STRIPING AND PAVEMENT DELINEATION

STAGE 3

THE INTENT OF THIS STAGE IS TO GRIND THE FULL PRISM OF THE NORTHBOUND LANES AND OVERLAY WITH RUBBERIZED HOT MIX ASPHALT. ADDITIONAL WORK INCLUDES CONSTRUCT PAVING IN THE NORTHBOUND LANES.
ALL WORK IN THIS STAGE SHOULD BE PERFORMED UNDER STANDARD TRAFFIC CONTROL.

STAGE 3 CONSTRUCTION (WORK TO BE PERFORMED):

(C1) COLD PLANE THE NORTHBOUND LANES TO REMOVE CENTERLINE AND SHOULDER RUMBLE STRIP
SEE STAGE CONSTRUCTION DETAILS SCD-1
SEE X-1 TYPICAL SHEET FOR STATION LIMITS

(C2) CONSTRUCT PAVING OF THE NORTHBOUND INSIDE SHOULDER AND No. 1 LANE FROM "SB12L2" 832+92.08 TO "SB12L2" 849+49.784 AND FROM "SB13L2" 1001+90.09 TO "SB13L2" 1013+94.52. THIS WORK SHOULD BE DONE IN STAGE 3 PHASE 2.
SEE STAGE CONSTRUCTION DETAILS SCD-1.

(C3) COLD PLANE ALL AREAS WITH TEMPORARY PAVEMENT GRINDING FROM TEMPORARY TRAFFIC STRIPE AND MARKERS
SEE X-3 TYPICAL SHEET FOR STATION LIMITS

(C4) PLACE RHMA-OPEN GRADED OVER RHMA-GAP GRADED
SEE X-1 TYPICAL SHEET FOR STATION LIMITS

(C5) PLACE FINAL STRIPING FROM PAVEMENT DELINEATION PLANS

STAGE CONSTRUCTION AND TRAFFIC HANDLING PLAN

1 **REVISED PER ADDENDUM No. 1 DATED MARCH 21, 2012**

THIS PLAN ACCURATE FOR STAGE CONSTRUCTION AND TRAFFIC HANDLING ONLY

SC-1

STATE OF CALIFORNIA - DEPARTMENT OF TRANSPORTATION
Caltrans® NORTH REGION DIVISION OF ENGINEERING

FUNCTIONAL SUPERVISOR: NESAR FORMOLI
CALCULATED-DESIGNED BY: L. MORALES
CHECKED BY: N. FORMOLI
REVISED BY / DATE REVISED

LAST REVISION 06-01-11 | DATE PLOTTED => 20-MAR-2012 | TIME PLOTTED => 10:15

Dist	COUNTY	ROUTE	POST MILES TOTAL PROJECT	SHEET No.	TOTAL SHEETS
03	Pla	65	R15.1/R19.9	102	189

Leobardo Morales 9-1-11
REGISTERED CIVIL ENGINEER DATE

9-26-11
PLANS APPROVAL DATE

REGISTERED PROFESSIONAL ENGINEER LEOBARDO MORALES No. C72023 Exp. 6-30-12 CIVIL STATE OF CALIFORNIA

THE STATE OF CALIFORNIA OR ITS OFFICERS OR AGENTS SHALL NOT BE RESPONSIBLE FOR THE ACCURACY OR COMPLETENESS OF SCANNED COPIES OF THIS PLAN SHEET.

ROADWAY SUMMARY

STATION LIMITS	DIRECTION	RUBBERIZED HOT MIX ASPHALT (OPEN GRADED)	RUBBERIZED HOT MIX ASPHALT (GAP GRADED)	HOT MIX ASPHALT (TYPE A)	CLASS 2 AGGREGATE BASE	TACK COAT	COLD PLANE AC PAVEMENT	IMPORTED MATERIAL (SHOULDER BACKING)
		TON	TON	TON	CY	TON	SQYD	TON
"SB12L2" 826+77.000 TO "SB12L2" 830+25.734	SB	161.69	323.38	727.6	2,023.70	1.0		45.22
"SB12L2" 830+25.734 TO "SB12L2" 849+59.376	SB	588.79	1,177.59	2,649.57	7,369.32	3.8		250.75
"D13L2" 849+49.784 TO "D13L2" 883+65.590	SB	1,040.11	2,080.23	4,680.51	13,018.02	6.6		442.94
"D13L2" 885+97.470 TO "D13L2" 933+62.860	SB	1,451.06	2,902.12	6,529.78	18,161.43	9.3		617.95
"D13L2" 934+12.070 TO "D13L2" 1001+90.088	SB	2,063.91	4,127.81	9,287.58	25,831.78	13.2		878.94
"SB13L2" 1001+90.088 TO "SB13L2" 1026+57.34	SB	751.28	1,502.56	3,380.75	9,402.97	4.8		319.94
"D13L2" 821+90.013 TO "D13L2" 882+97.057	NB	1,830.37	3,660.75			5.8	28,051.69	
"D13L2" 885+64.851 TO "D13L2" 933+62.670	NB	1,437.98	2,875.96			4.6	22,037.98	
"D13L2" 934+11.882 TO "D13L2" 1026+75.820	NB	2776.54	5,553.08			8.9	42,552.36	
"SB12L2" 832+92.080 TO "SB12L2" 849+59.376	NB	202.23	404.46	910.04	2,531.11	1.3		216.21
"SB13L2" 1001+90.090 TO "SB13L2" 1013+94.520	NB	171.85	343.70	773.32	2,150.84	1.1		156.18
"D13L2" 800+30.000 TO "D13L2" 819+91.313	NB		1091.66			2.4	11,373.00	
"D13L2" 821+55.340 TO "D13L2" 826+68.281	SB		534.39			0.9	4,094.98	
"D13L2" 1028+20.176 TO "D13L2" 1037+33.970	NB		547.76			0.9	4,197.36	
"D13L2" 1028+20.176 TO "D13L2" 1049+76.000	SB		1292.27			2.9	13,692.00	
"D13L2" 881+25.000 TO "D13L2" 883+25.000	SB				569.91			
"D13L2" 886+50.000 TO "D13L2" 888+50.000	SB				605.09			
TOTAL		12,475.81	28,417.72	28,939.15	81,664.17	67.5	125,999.4	2,928.14

1 1

EARTHWORK SUMMARY 1

ALIGNMENT	STATION LIMITS	ROADWAY EXCAVATION	(N) EMBANKMENT	IMPORTED BORROW
		CY	CY	CY
"SB12L2"	826+77.00 TO 849+59.37	11,573.57	5,735.07	
"SB13L2"	1001+90.09 TO 1025+46.15	12,654.17	6,200.48	
"D13L2"	849+49.78 TO 883+65.59	13,404.08	5,430.01	
"D13L2"	885+97.47 TO 933+62.86	12,311.11	10,895.34	
"D13L2"	934+12.07 TO 1001+90.09	4,804.59	43,223.14	
	STAGE CONSTRUCTION QUANTITIES	97.53		
	SUBTOTAL	54,845.05	71,484.04	16,638.99
	TOTAL	54,845.05		16,638.99

(N) NOT A SEPARATE PAY ITEM, FOR INFORMATION ONLY

RUMBLE STRIP QUANTITIES

STATION LIMITS	DIRECTION	TYPE	RUMBLE STRIP
			STA
"D13L2" 830+30.00 TO 882+60.00	SB	SHOULDER	105
"D13L2" 888+20.00 TO 932+93.00	SB	SHOULDER	89
"D13L2" 935+02.00 TO 1018+80.00	SB	SHOULDER	168
"D13L2" 829+60.00 TO 880+75.00	NB	SHOULDER	102
"D13L2" 886+75.00 TO 932+70.00	NB	SHOULDER	92
"D13L2" 935+02.00 TO 1018+80.00	NB	SHOULDER	168
"D13L2" 1047+05.00 TO 1049+76.00	NB	CENTERLINE	3
TOTAL			726

1 REVISED PER ADDENDUM No. 1 DATED MARCH 21, 2012

SUMMARY OF QUANTITIES
Q-1

REVISED BY | DATE REVISED
L. MORALES | N. FORMOLI
CALCULATED-DESIGNED BY | CHECKED BY
FUNCTIONAL SUPERVISOR
NESAR FORMOLI

STATE OF CALIFORNIA - DEPARTMENT OF TRANSPORTATION
Caltrans NORTH REGION DIVISION OF ENGINEERING

LAST REVISION 06-01-11 | DATE PLOTTED => 20-MAR-2012 TIME PLOTTED => 10:15

Dist	COUNTY	ROUTE	POST MILES TOTAL PROJECT	SHEET No.	TOTAL SHEETS
03	Pla	65	R15.1/R19.9	103	189

Leobardo Morales 9-1-11
REGISTERED CIVIL ENGINEER DATE

9-26-11
PLANS APPROVAL DATE

REGISTERED PROFESSIONAL ENGINEER LEOBARDO MORALES No. C72023 Exp. 6-30-12 CIVIL STATE OF CALIFORNIA

THE STATE OF CALIFORNIA OR ITS OFFICERS OR AGENTS SHALL NOT BE RESPONSIBLE FOR THE ACCURACY OR COMPLETENESS OF SCANNED COPIES OF THIS PLAN SHEET.

METAL BEAM GUARD RAILING SUMMARY

LOCATION	STATION LIMITS	DIRECTION	SIDE	LAYOUT TYPE	TRANSITION RAILING (TYPE WB)	METAL BEAM GUARD RAILING (WOOD POST)	DOUBLE MBGR (WOOD POST)	CRASH CUSHION (TYPE CAT)	CRASH CUSHION (TYPE CAT) BACKUP	ALTERNATIVE FLARED TERMINAL SYSTEM	END ANCHOR ASSEMBLY (TYPE SFT)	END CAP (TYPE A)	(N) END CAP (TYPE TC)	REMOVE METAL BEAM GUARD RAILING
					EA	LF	LF	EA	EA	EA	EA	EA	EA	LF
MARKHAM RAVINE BRIDGE LEFT	"D13L2" 883+28.14 TO "D13L2" 883+81.58	SB	L+	12DD		37.5					1	1		
MARKHAM RAVINE BRIDGE LEFT	"D13L2" 886+53.74 TO "D13L2" 887+14.67	SB	L+	12B	1					1			1	
MARKHAM RAVINE BRIDGE LEFT	"D13L2" 886+21.23 TO "D13L2" 888+10.47	SB	R+	12E	1	25	110.32	1	1				1	
MARKHAM RAVINE BRIDGE RIGHT	"D13L2" 880+75.36 TO "D13L2" 882+31.27	NB	L+	12E	1	25	124.38	1	1				1	
MARKHAM RAVINE BRIDGE RIGHT	"D13L2" 882+43.84 TO "D13L2" 882+81.58	NB	L+											37.5
MARKHAM RAVINE BRIDGE RIGHT	"D13L2" 885+66.76 TO "D13L2" 886+29.54	NB	L+											62.7
NICOLAUS OVERCROSSING COLUMN	"D13L2" 920+26.65 TO "D13L2" 921+90.20	MID		14A		100	50.0 ~~33.3~~	2	2		2	2		
NICOLAUS OVERCROSSING COLUMN	"D13L2" 920+12.58 TO "D13L2" 922+12.33	MID												123.5
AIRPORT CREEK BRIDGE LEFT	"D13L2" 933+10.61 TO "D13L2" 933+48.11	SB	L+	12DD		37.5					1	1		
AIRPORT CREEK BRIDGE LEFT	"D13L2" 934+26.82 TO "D13L2" 934+89.26	SB	L+	12B	1					1			1	
AIRPORT CREEK BRIDGE LEFT	"D13L2" 934+26.82 TO "D13L2" 936+92.08	SB	R+	12E	1	25	177.00	1	1				1	
AIRPORT CREEK BRIDGE RIGHT	"D13L2" 930+82.59 TO "D13L2" 933+47.51	NB	L+	12E	1	25	180.50	1	1				1	
AIRPORT CREEK BRIDGE RIGHT	"D13L2" 933+10.03 TO "D13L2" 933+47.51	NB	L+											37.5
AIRPORT CREEK BRIDGE RIGHT	"D13L2" 934+27.04 TO "D13L2" 934+89.47	NB	L+											62.7
							642.2							
SUBTOTAL					6	275.0	~~625.5~~	6	6	2	4	4	6	323.9
TOTAL					6	275.0	~~625.5~~ 642.2	6	6	2	4	4		323.9

(N) - NOT A SEPARATE PAY ITEM, FOR INFORMATION ONLY

1

TEMPORARY WATER POLLUTION CONTROL ITEMS 1

	TEMPORARY TACKED STRAW	TEMPORARY COVER	TEMPORARY CONSTRUCTION ENTRANCE	TEMPORARY CONSTRUCTION ROADWAY	TEMPORARY SLOPE DRAINS	TEMPORARY FIBER ROLL	TEMPORARY CHECK DAM	TEMPORARY HYDRAULIC MULCH (POLYMER STABILIZED FIBER MATRIX)	TEMPORARY SILT FENCE	TEMPORARY INLET PROTECTION	TEMPORARY EROSION CONTROL BLANKET	TEMPORARY GRAVEL BAG BERM	MOVE-IN/MOVE OUT (TEMPORARY EROSION CONTROL)	12" CORRUGATED STEEL PIPE
	SQYD	SQYD	EA	CY	LF	LF	LF	SQYD	LF	EA	SQYD	LF	EA	LF
TOTAL	84,500	6,000	17	1780	500	20,000	2412	84,500	26,200	8	1,000	600	10	240

1 REVISED PER ADDENDUM No. 1 DATED MARCH 21, 2012

SUMMARY OF QUANTITIES
Q-2

STATE OF CALIFORNIA - DEPARTMENT OF TRANSPORTATION
Caltrans NORTH REGION DIVISION OF ENGINEERING

FUNCTIONAL SUPERVISOR: NESAR FORMOLI
CALCULATED-DESIGNED BY: L. MORALES
CHECKED BY: N. FORMOLI
REVISED BY
DATE REVISED

LAST REVISION 06-01-11
DATE PLOTTED => 20-MAR-2012
TIME PLOTTED => 10:29