Dist	COUNTY	ROUTE	POST MILES TOTAL PROJECT	SHEET No.	TOTAL SHEETS
03	Yol,Sac	80	R10.9/R11.7, M0.0/M10.4	2	1012

REGISTERED CIVIL ENGINEER 6-15-10 DATE

9-7-10
PLANS APPROVAL DATE

REGISTERED PROFESSIONAL ENGINEER A. Y. FONG No. 64343 Exp. 6-30-11 CIVIL STATE OF CALIFORNIA

THE STATE OF CALIFORNIA OR ITS OFFICERS OR AGENTS SHALL NOT BE RESPONSIBLE FOR THE ACCURACY OR COMPLETENESS OF SCANNED COPIES OF THIS PLAN SHEET.

DESIGN DESIGNATIONS

T = 6%	V = 70 MPH		
D(EB) = 55-57%	D(WB) = 53-64%		
YOLO/SACRAMENTO COUNTY LINE	AADT(2005) = 81,000	AADT(2034) = 115,000	DDHV = 4,175
WEST EL CAMINO AVENUE	AADT(2005) = 84,000	AADT(2034) = 119,000	DDHV = 4,329
ROUTE 5/80 SEPARATION	AADT(2005) = 144,000	AADT(2034) = 204,000	DDHV = 6,769
NORTHGATE BOULEVARD	AADT(2005) = 138,000	AADT(2034) = 196,000	DDHV = 5,737
NORWOOD AVENUE	AADT(2005) = 146,000	AADT(2034) = 207,000	DDHV = 6,070
RALEY BOULEVARD	AADT(2005) = 144,000	AADT(2034) = 204,000	DDHV = 6,455
WINTERS STREET	AADT(2005) = 141,000	AADT(2034) = 200,000	DDHV = 5,732
ROUTE 80 (MAIN LINE)	TI = 15	"R" VALUE = 50	
AUXILIARY LANES	TI = 14.5	"R" VALUE = 50	
ROUTE 80 HOV LANES	TI = 12.5	"R" VALUE = 50	

ABBREVIATIONS

LTS	LIME TREATED SOIL
SUPER	SUPERELEVATION
TI	TRAFFIC INDEX
EOC	EDGE OF CONCRETE
GB	GRADE BREAK
LL	LANE LINE
CP	CATCH POINT
HOV	HIGH OCCUPANCY VEHICLE
RSC	RAPID STRENGTH CONCRETE
RHMA-O	RUBBERIZED HOT MIX ASPHALT (TYPE O)
FOB	FACE OF BARRIER
S/C	SAWCUT
TOB	TOP OF BARRIER

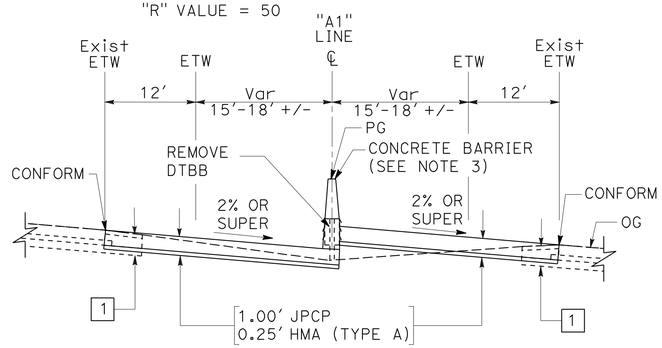

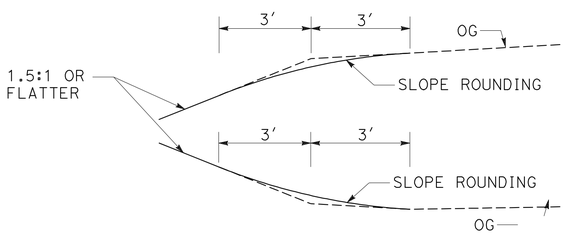

TYPICAL SLOPE ROUNDING DETAIL

ROUTE 80
MEDIAN
TYPICAL SUPERELEVATION CROSS SECTION

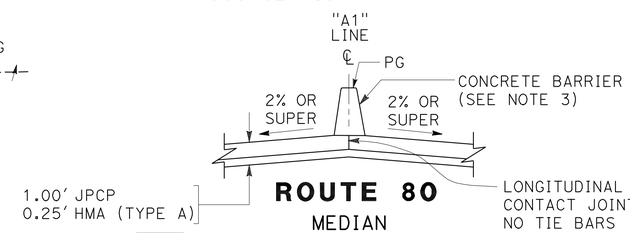

ROUTE 80
MEDIAN

2 TYPICAL LONGITUDINAL JOINT CROSS SECTION

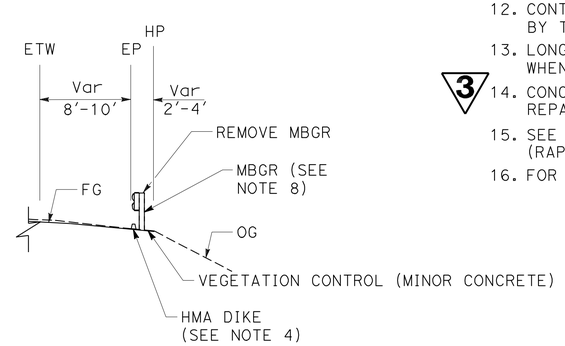

TYPICAL MBGR AND HMA DIKE CROSS SECTION

2 **REVISED PER ADDENDUM No. 2 DATED MAY 12, 2011**

3 **REVISED PER ADDENDUM No. 3 DATED MAY 19, 2011**

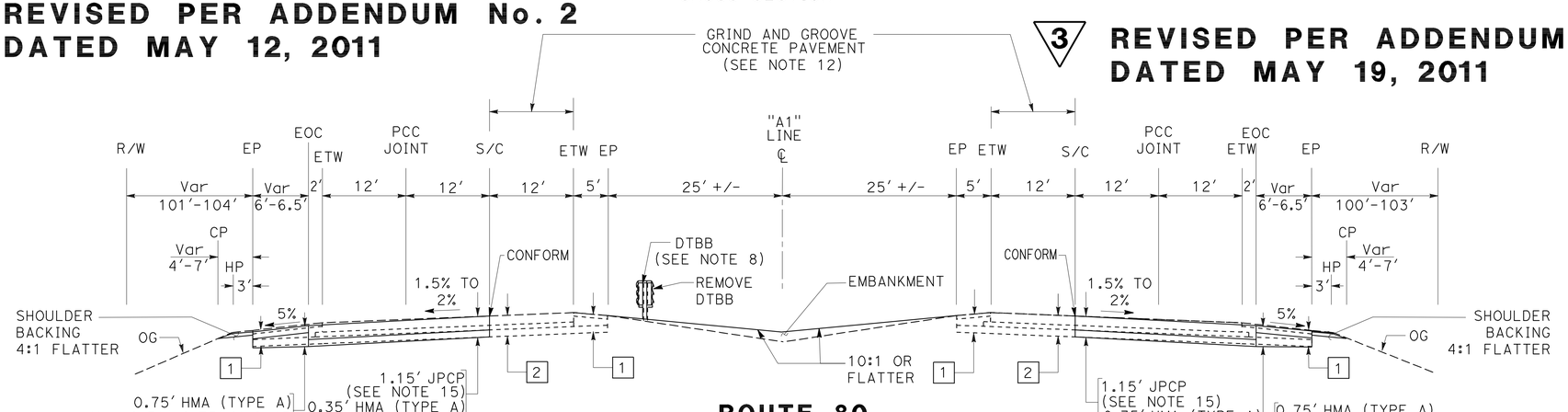

ROUTE 80

WESTBOUND
"A1" 239+22.5 TO 239+50

EASTBOUND
"A1" 239+22.5 TO 239+50

NOTES:

1. DIMENSIONS OF THE STRUCTURAL SECTIONS ARE SUBJECT TO TOLERANCES SPECIFIED IN THE STANDARD SPECIFICATIONS.
2. SUPERELEVATION AS SHOWN OR AS DIRECTED BY THE ENGINEER.
3. FOR BARRIER LOCATION AND TYPE, SEE LAYOUT SHEETS.
4. FOR HMA DIKE AND CURB LOCATION AND TYPE, SEE LAYOUT SHEETS.
5. EXISTING PAVEMENT SECTIONS SHOWN ARE BASED ON AS-BUILT INFORMATION AND ARE SUBJECT TO VARIATION DUE TO CONSTRUCTION TOLERANCES AND INTERIM ROADWAY MAINTENANCE ACTIVITIES.
6. FOR LOCATION OF EDGE DRAINS, SEE DRAINAGE PLANS.
7. SEE STRUCTURE PLANS FOR ADDITIONAL INFORMATION AND STRUCTURE QUANTITIES.
8. FOR MBGR/DTBB LOCATION, SEE LAYOUT SHEETS.
9. SEE LAYOUT AND CONSTRUCTION DETAILS FOR LOCATION OF TAPERS AND CONFIGURATION.
10. FOR ACCURATE RIGHT OF WAY AND ACCESS DATA, CONTACT RIGHT OF WAY ENGINEERING AT THE DISTRICT OFFICE.
11. SEE SUMMARY OF QUANTITIES FOR LOCATIONS AND LIMITS OF GRIND AND GROOVE CONCRETE PAVEMENT.
12. CONTINUOUS OR INDIVIDUAL SLABS TO BE REPLACED AS DETERMINED BY THE ENGINEER.
13. LONGITUDINAL FORMS SHALL BE USED TO PROVIDE CORRECT CROSS SLOPE WHEN REQUESTED BY ENGINEER.
14. (3) CONCRETE PAVEMENT SHALL BE ~~GROUND AND~~ GROOVED AFTER REPAIR/REPLACEMENT OF CONCRETE PAVEMENT.
15. SEE QUANTITY SHEETS FOR LIMITS OF CONCRETE PAVEMENT (RAPID STRENGTH CONCRETE).
16. FOR GUTTER LOCATIONS, SEE LAYOUT SHEETS.

TYPICAL STRUCTURAL SECTIONS

EXISTING

1	0.25′ HMA Var AB 0.50′ LTS
2	0.67′ PCC 0.33′ CTB 0.50′ LTS
3	0.35′ HMA 0.65′ CTB 0.50′ LTS
4	0.35′ HMA Var AB 0.50′ LTS
5	0.06′ HMA (OPEN GRADED) 0.50′ HMA 0.25′ ATPB 0.90′ CI AB 1.10′ CI AS
6	0.10′ RHMA-O 0.30′ HMA 0.50′ ACB 0.75′ AS
7	0.15′ RHMA-O 0.50′ HMA 1.87′ AB

TYPICAL CROSS SECTIONS

NO SCALE

X-1

STATE OF CALIFORNIA - DEPARTMENT OF TRANSPORTATION
Caltrans®
NORTH REGION
OFFICE OF DESIGN SOUTH
DESIGN BRANCH S7

FUNCTIONAL SUPERVISOR: CYRUS HUI
CALCULATED-DESIGNED BY: A. RANDHAWA
CHECKED BY: A. FONG
REVISED BY
DATE REVISED

LAST REVISION 00-00-00
DATE PLOTTED => 18-MAY-2011
TIME PLOTTED => 13:03

Dist	COUNTY	ROUTE	POST MILES TOTAL PROJECT	SHEET No.	TOTAL SHEETS
03	Yol,Sac	80	R10.9/R11.7, M0.0/M10.4	45	1012

REGISTERED CIVIL ENGINEER 6-15-10 DATE

9-7-10
PLANS APPROVAL DATE

REGISTERED PROFESSIONAL ENGINEER A. Y. FONG No. 64343 Exp 6-30-11 CIVIL STATE OF CALIFORNIA

THE STATE OF CALIFORNIA OR ITS OFFICERS OR AGENTS SHALL NOT BE RESPONSIBLE FOR THE ACCURACY OR COMPLETENESS OF SCANNED COPIES OF THIS PLAN SHEET.

NOTE:

FOR ACCURATE RIGHT OF WAY AND ACCESS DATA, CONTACT RIGHT OF WAY ENGINEERING AT THE DISTRICT OFFICE.

CURVE DATA

No.	R	Δ	T	L
9	4500.00′	42°10′17"	1735.11′	3312.13′
10	1800.00′	42°50′04"	706.03′	1345.68′
11	1809.00′	27°57′08"	450.24′	882.54′
12	1868.00′	7°11′53"	117.49′	234.68′
13	1799.00′	31°45′19"	511.70′	997.07′
14	1200.00′	29°05′44"	311.41′	609.37′
15	3000.00′	3°11′29"	83.57′	167.10′

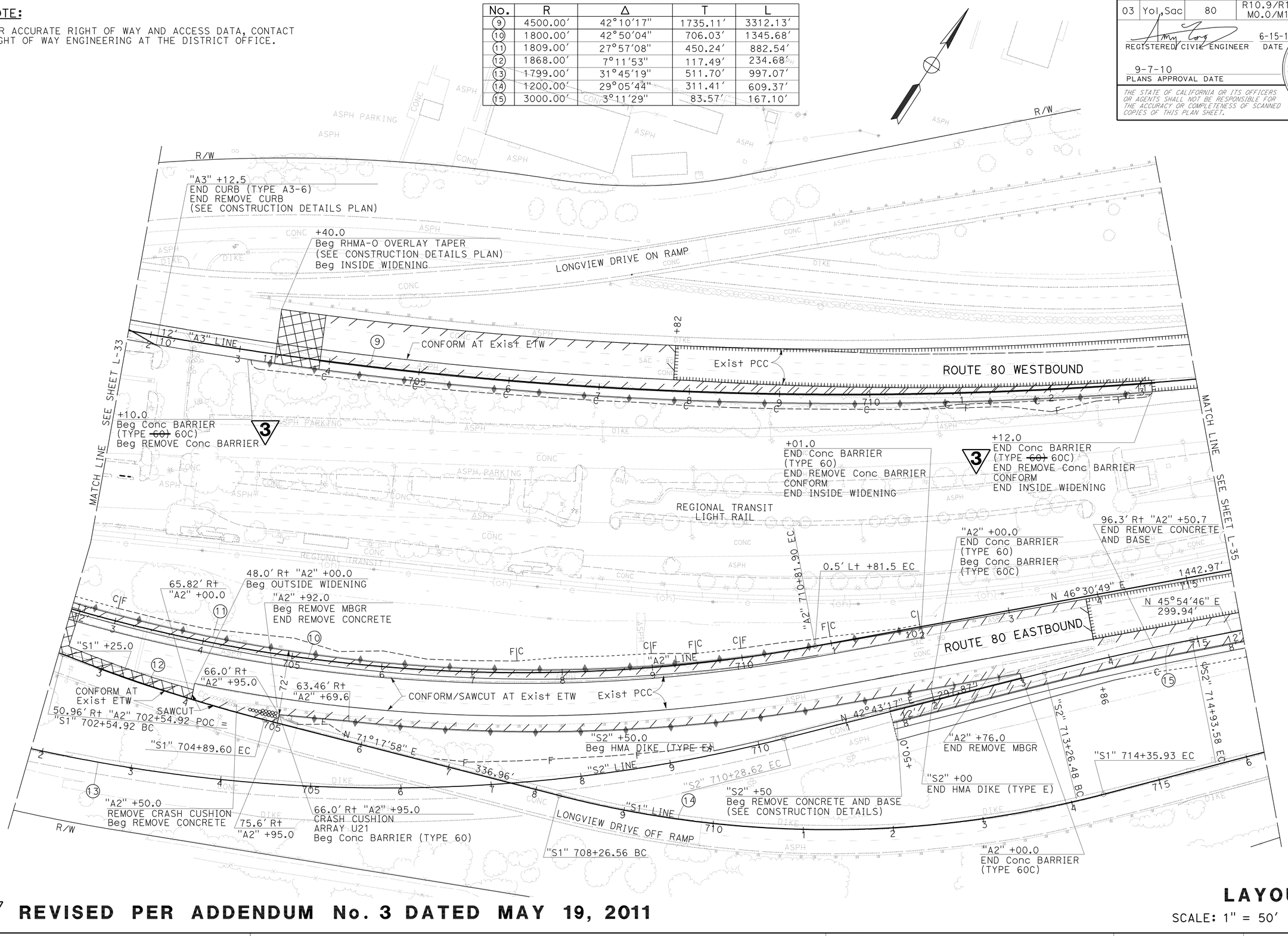

3 REVISED PER ADDENDUM No. 3 DATED MAY 19, 2011

LAYOUT

SCALE: 1" = 50′

L-34

STATE OF CALIFORNIA - DEPARTMENT OF TRANSPORTATION
Caltrans
NORTH REGION
OFFICE OF DESIGN SOUTH
DESIGN BRANCH S7

FUNCTIONAL SUPERVISOR: CYRUS HUI
CALCULATED-DESIGNED BY: A. RANDHAWA
CHECKED BY: A. FONG
REVISED BY
DATE REVISED

LAST REVISION 00-00-00
DATE PLOTTED => 18-MAY-2011
TIME PLOTTED => 13:03

Dist	COUNTY	ROUTE	POST MILES TOTAL PROJECT	SHEET No.	TOTAL SHEETS
03	Yol,Sac	80	R10.9/R11.7, M0.0/M10.4	91	1012

REGISTERED CIVIL ENGINEER 6-15-10 DATE

9-7-10
PLANS APPROVAL DATE

REGISTERED PROFESSIONAL ENGINEER A. Y. FONG No. 64343 Exp 6-30-11 CIVIL STATE OF CALIFORNIA

THE STATE OF CALIFORNIA OR ITS OFFICERS OR AGENTS SHALL NOT BE RESPONSIBLE FOR THE ACCURACY OR COMPLETENESS OF SCANNED COPIES OF THIS PLAN SHEET.

ABBREVIATION

TBAR - TOP OF BARRIER

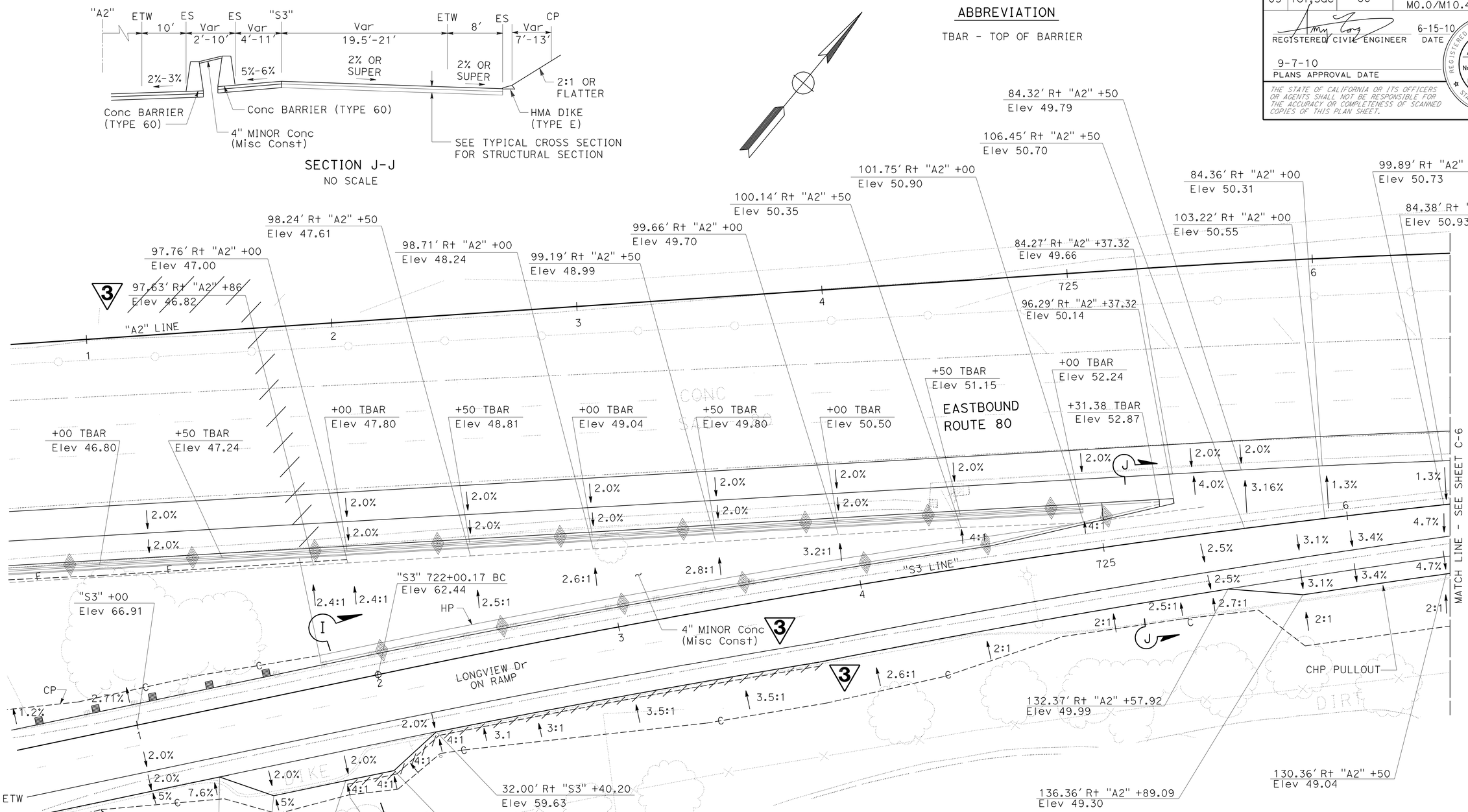

LONGVIEW DRIVE EASTBOUND ON RAMP

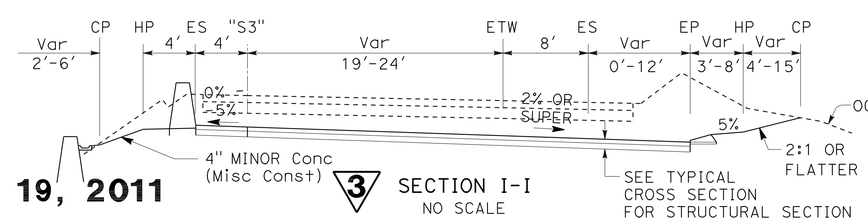

SECTION I-I
NO SCALE

REVISED PER ADDENDUM No. 3 DATED MAY 19, 2011

CONSTRUCTION DETAILS

SCALE: 1" = 20'

C-5

STATE OF CALIFORNIA - DEPARTMENT OF TRANSPORTATION
NORTH REGION
OFFICE OF DESIGN SOUTH
DESIGN BRANCH S7

FUNCTIONAL SUPERVISOR: CYRUS HUI
CALCULATED-DESIGNED BY: AMY FONG
CHECKED BY: W.D. ROBERTS
REVISED BY
DATE REVISED

LAST REVISION 00-00-00
DATE PLOTTED => 18-MAY-2011
TIME PLOTTED => 13:03

Dist	COUNTY	ROUTE	POST MILES TOTAL PROJECT	SHEET No.	TOTAL SHEETS
03	Yol,Sac	80	R10.9/R11.7, M0.0/M10.4	94	1012

REGISTERED CIVIL ENGINEER 6-15-10 DATE

9-7-10
PLANS APPROVAL DATE

REGISTERED PROFESSIONAL ENGINEER A. Y. FONG No. 64343 Exp 6-30-11 CIVIL STATE OF CALIFORNIA

THE STATE OF CALIFORNIA OR ITS OFFICERS OR AGENTS SHALL NOT BE RESPONSIBLE FOR THE ACCURACY OR COMPLETENESS OF SCANNED COPIES OF THIS PLAN SHEET.

3

NOTES:

1. DIMENSIONS OF THE STRUCTURAL SECTIONS ARE SUBJECT TO TOLERANCES SPECIFIED IN THE STANDARD SPECIFICATIONS.
2. MATCH EXISTING CROSS SLOPE OR SUPERELEVATION OR AS DIRECTED BY THE ENGINEER.
3. THE OUTLINE OF THE CONCRETE TO BE REMOVED SHALL BE SAWCUT FULL DEPTH. ALIGN WITH EXISTING SAWCUT PATTERN.
4. CONCRETE PAVEMENT SHALL BE REMOVED BY NON-IMPACT METHODS.
5. LOCATION AND LENGTH OF REPLACE CONCRETE PAVEMENT (RAPID STRENGTH CONCRETE) SHALL BE DETERMINED BY ENGINEER.
6. FOR DETAILS NOT SHOWN, SEE Std PLAN P8.
7. SEE STANDARD PLANS FOR PLACEMENT OF DOWEL BARS.

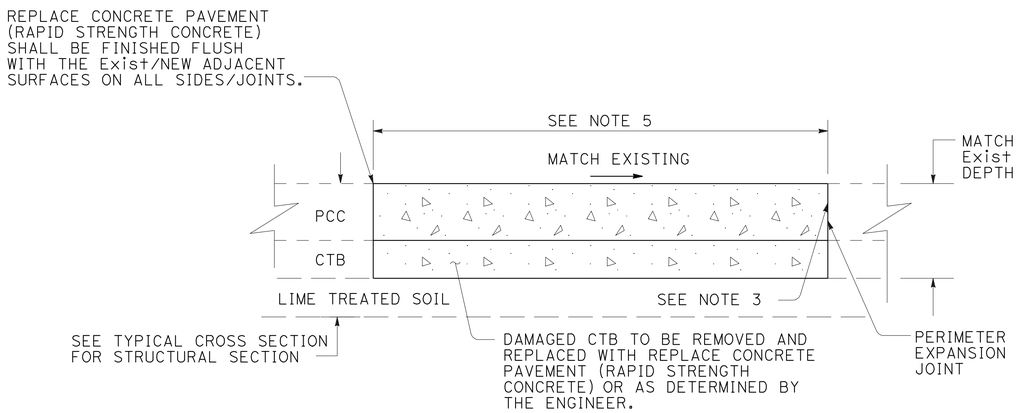

ELEVATION

REPLACE CONCRETE PAVEMENT (RAPID STRENGTH CONCRETE)

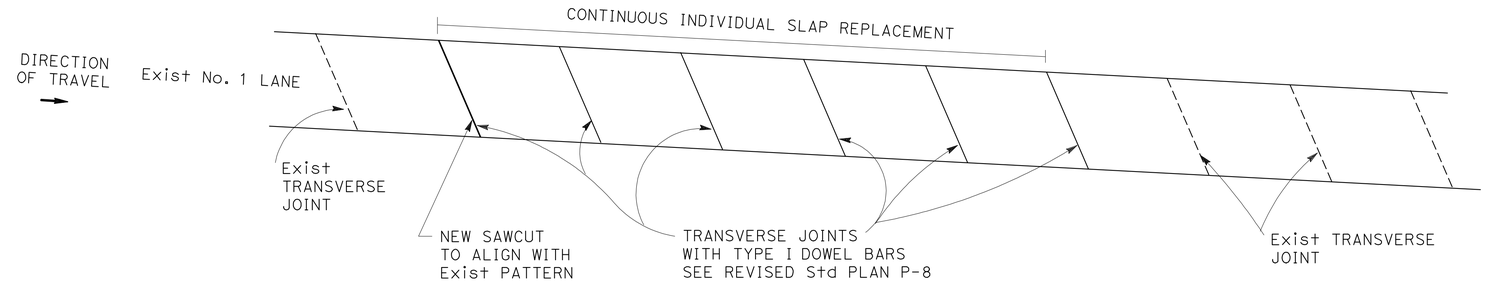

PLAN

CASE 1: FOR SEQUENCE OF INDIVIDUAL SLAB REPLACEMENT GREATER THAN 70 FEET IN LENGTH

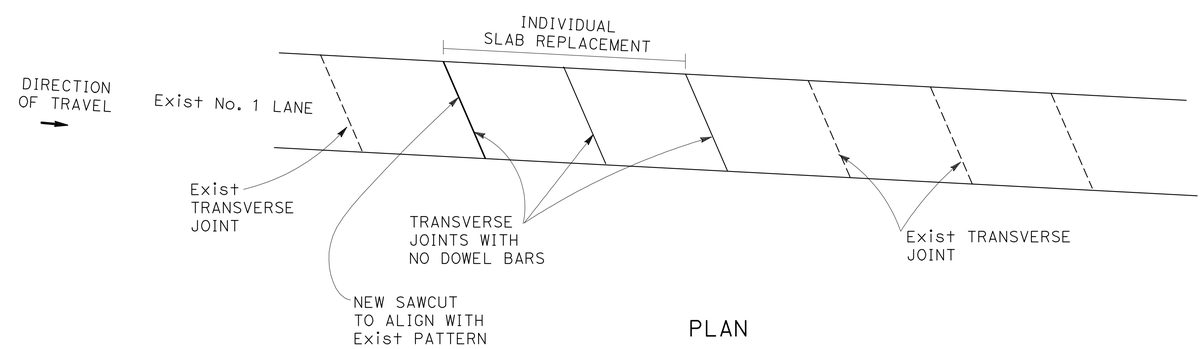

PLAN

CASE 2: FOR SEQUENCE OF INDIVIDUAL SLAB REPLACEMENT LESS THAN 70 FEET IN LENGTH

3 **REVISED PER ADDENDUM No. 3 DATED MAY 19, 2011**

CONSTRUCTION DETAILS
NO SCALE
C-8

REVISED BY | DATE REVISED
A.S.RANDHAWA | AMY FONG
CALCULATED-DESIGNED BY | CHECKED BY
FUNCTIONAL SUPERVISOR
CYRUS HUI

STATE OF CALIFORNIA - DEPARTMENT OF TRANSPORTATION
Caltrans
NORTH REGION
OFFICE OF DESIGN SOUTH
DESIGN BRANCH S7

LAST REVISION 00-00-00 | DATE PLOTTED => 19-MAY-2011 | TIME PLOTTED => 06:39

Dist	COUNTY	ROUTE	POST MILES TOTAL PROJECT	SHEET No.	TOTAL SHEETS
03	Yol, Sac	80	R10.9/R11.7, M0.0/M10.4	97	1012

REGISTERED CIVIL ENGINEER 6-15-10 DATE

9-7-10
PLANS APPROVAL DATE

REGISTERED PROFESSIONAL ENGINEER A. Y. FONG No. 64343 Exp 6-30-11 CIVIL STATE OF CALIFORNIA

THE STATE OF CALIFORNIA OR ITS OFFICERS OR AGENTS SHALL NOT BE RESPONSIBLE FOR THE ACCURACY OR COMPLETENESS OF SCANNED COPIES OF THIS PLAN SHEET.

3

LEGEND:

RHMA-O RUBBERIZED HOT MIX ASPHALT (TYPE-O)

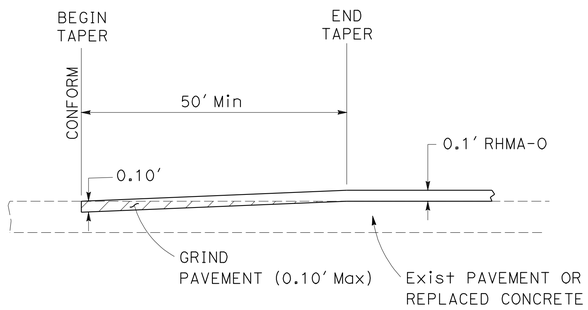

RHMA-O OVERLAY TAPER

SEE LAYOUT SHEETS FOR LOCATIONS

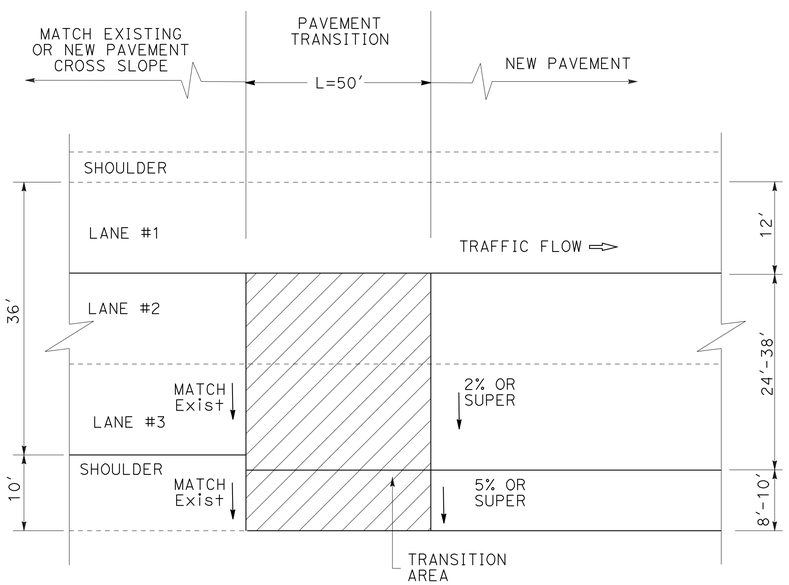

PAVEMENT TRANSITION

SEE LAYOUT SHEETS FOR LOCATIONS

NOTE:

1. LANE NUMBERS INCREASE FROM LEFT TO RIGHT IN DIRECTION OF TRAVEL.

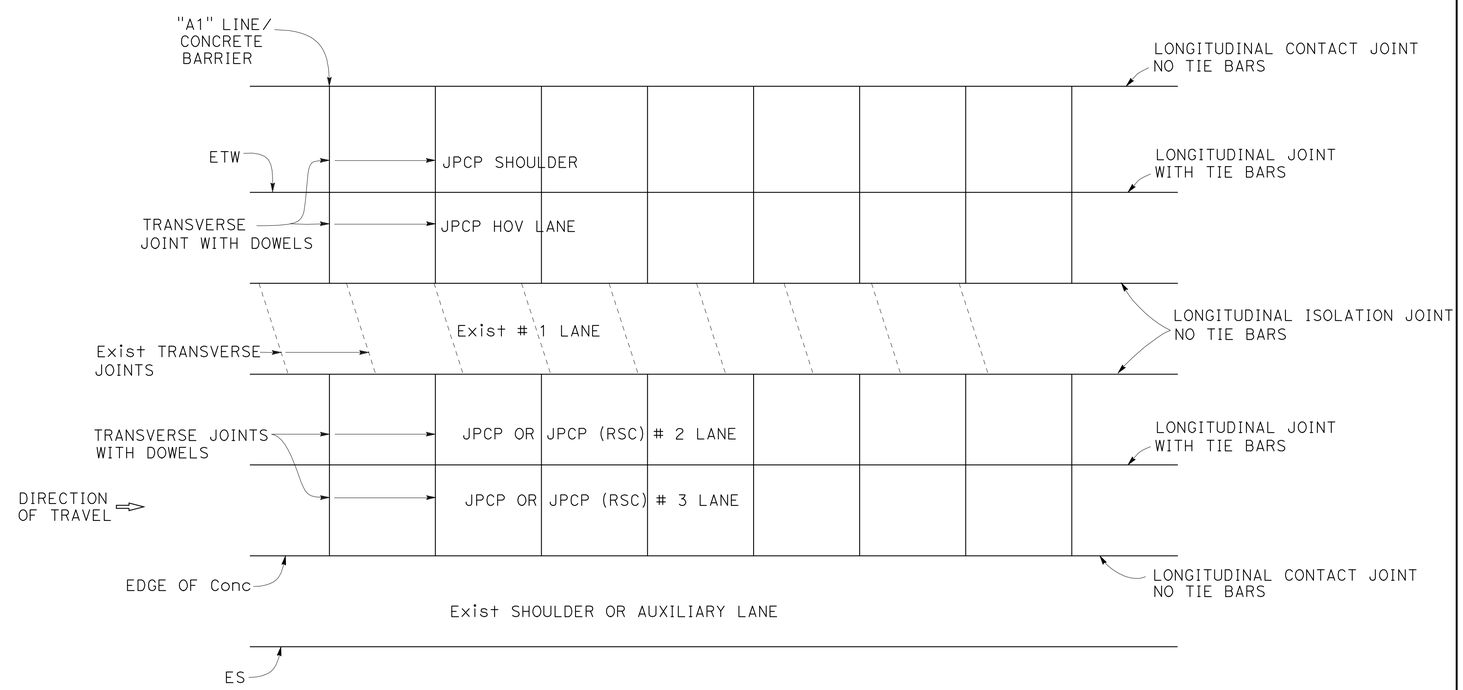

NOTE:

FOR DETAILS NOT SHOWN, SEE REVISED Std PLANS P1, P2, P8, P10, P12, P17, P18, P20, P30, P33, P45

CONCRETE PAVEMENT LANE SCHEMATICS AND JOINT DETAIL

3 **REVISED PER ADDENDUM No. 3 DATED MAY 19, 2011**

CONSTRUCTION DETAILS

NO SCALE

C-11

REVISED BY | DATE REVISED

A.S.RANDHAWA | AMY FONG

CALCULATED-DESIGNED BY | CHECKED BY

FUNCTIONAL SUPERVISOR: CYRUS HUI

STATE OF CALIFORNIA - DEPARTMENT OF TRANSPORTATION
Caltrans
NORTH REGION
OFFICE OF DESIGN SOUTH
DESIGN BRANCH S7

LAST REVISION 00-00-00 | DATE PLOTTED => 19-MAY-2011 | TIME PLOTTED => 06:39

Dist	COUNTY	ROUTE	POST MILES TOTAL PROJECT	SHEET No.	TOTAL SHEETS
03	Yol,Sac	80	R10.9/R11.7, M0.0/M10.4	238	1012

REGISTERED CIVIL ENGINEER 6-15-10 DATE

9-7-10
PLANS APPROVAL DATE

REGISTERED PROFESSIONAL ENGINEER A.Y. FONG No. 64343 Exp. 6-30-11 CIVIL STATE OF CALIFORNIA

THE STATE OF CALIFORNIA OR ITS OFFICERS OR AGENTS SHALL NOT BE RESPONSIBLE FOR THE ACCURACY OR COMPLETENESS OF SCANNED COPIES OF THIS PLAN SHEET.

LEGEND AND ABBREVIATIONS

- MEDIAN WIDENING CONSTRUCTION THIS STAGE
- (No.) CONSTRUCTION ITEM THIS STAGE
- DIRECTION OF TRAVEL ARROW
- CONCRETE PAVEMENT (RAPID STRENGTH CONCRETE) THIS STAGE
- TEMPORARY RAILING (TYPE K)
- (No. / X) TRAFFIC STRIPING DETAIL X = P (PAINT), M (MARKER) OR T (TAPE)
- CHANGE OF PAVEMENT DELINEATION DETAILS
- [No.] ROADSIDE SIGN/CONSTRUCTION AREA SIGN NUMBER
- (A) ADDITIONAL STATIONARY MOUNTED CONSTRUCTION AREA SIGN
- CONCRETE PAVEMENT CONSTRUCTION THIS STAGE
- OUTSIDE WIDENING THIS STAGE
- RAMP CONSTRUCTION THIS STAGE
- CONCRETE PAVEMENT CONSTRUCTION WITH RAMP CLOSURE THIS STAGE
- SHOULDER RECONSTRUCTION
- END TRAFFIC STRIPE PATTERN OR REMOVAL LIMIT
- CHANNELIZER (SURFACE MOUNTED)
- REMOVE ROADSIDE SIGN (SEE SIGN PLAN)
- RELOCATE ROADSIDE SIGN
- LL LANE LINE
- TRAFFIC PLASTIC DRUM
- PCMS
- RESET ROADSIDE SIGN (SEE SIGN PLAN)
- ROADSIDE SIGN (BARRIER MOUNTED) (SEE SIGN PLAN)
- TYPE VI ARROW
- COVER ROADSIDE SIGN
- REMOVE ROADSIDE SIGN (SEE SIGN PLAN)

NOTES:

3
1. INDEX NOTES DO NOT REPRESENT AN ORDER OF WORK AS INDICATED.
2. OGRHMA LIFT, ~~GROOVING, GRINDING~~ AND FINAL STRIPING IS THE FINAL ORDER OF WORK.
3. WORK NOT NECESSARY FOR STAGING OPERATION CAN BE DONE AT ANY STAGE AND IS NOT SHOWN.
4. LOCATION OF CONSTRUCTION AREA SIGNS SHOWN ARE APPROXIMATE. EXACT LOCATIONS TO BE DETERMINED BY THE ENGINEER.
5. FOR EXISTING SIGNS NOT SHOWN FOR REMOVAL, REMAIN, OR RELOCATION, SEE SIGN PLANS.
6. FOR LANE CLOSURES, SEE "TRAFFIC CONTROL" IN THE SPECIAL PROVISIONS.
7. PLACE TEMPORARY TRAFFIC SCREENS ON ALL TEMPORARY RAILING (TYPE K).
8. ALL SIGN CODES SHOWN ARE FEDERAL SIGN CODES UNLESS OTHERWISE DESIGNATED AS CALIFORNIA SIGN CODES.
9. CONSTRUCTION AREA SIGNS SHOWN ARE FOR STAGE CONSTRUCTION AND ARE IN ADDITION TO THOSE SHOWN ON SHEET CS-1.
10. REFER TO DRAINAGE PLANS FOR DRAINAGE WORK.
11. REFER TO SUMMARY OF QUANTITIES FOR LIMITS OF CONCRETE PAVEMENT (RAPID STRENGTH CONCRETE).
12. EXACT LOCATION OF TEMPORARY RAILING(TYPE K) OPENING TO BE DETERMINED BY THE ENGINEER.
13. REFER TO PHASE ~~3~~ 2 AND 3 CROSSOVER LOCATIONS AND DETOUR FOR MEDIAN CONCRETE BARRIER AND DTBB OPENINGS.

1

3 **REVISED PER ADDENDUM No. 3 DATED MAY 19, 2011**

1 **REVISED PER ADDENDUM No. 1 DATED MARCH 24, 2011**

THIS PLAN ACCURATE FOR STAGE CONSTRUCTION WORK ONLY.

STAGE CONSTRUCTION PLAN
(LEGEND AND NOTES)
NO SCALE

SC-1

STATE OF CALIFORNIA - DEPARTMENT OF TRANSPORTATION
Caltrans
NORTH REGION
OFFICE OF DESIGN SOUTH
DESIGN BRANCH S7

FUNCTIONAL SUPERVISOR: CYRUS HUI
CALCULATED-DESIGNED BY: A. FONG
CHECKED BY: M. SCHMUCKI
REVISED BY
DATE REVISED

LAST REVISION 00-00-00
DATE PLOTTED => 19-MAY-2011
TIME PLOTTED => 06:40

Dist	COUNTY	ROUTE	POST MILES TOTAL PROJECT	SHEET No.	TOTAL SHEETS
03	Yol,Sac	80	R10.9/R11.7, M0.0/M10.4	570	1012

REGISTERED CIVIL ENGINEER 6-15-10 DATE

9-7-10
PLANS APPROVAL DATE

REGISTERED PROFESSIONAL ENGINEER A. Y. FONG No. 64343 Exp 6-30-11 CIVIL STATE OF CALIFORNIA

THE STATE OF CALIFORNIA OR ITS OFFICERS OR AGENTS SHALL NOT BE RESPONSIBLE FOR THE ACCURACY OR COMPLETENESS OF SCANNED COPIES OF THIS PLAN SHEET.

3

ROADWAY AND EARTHWORK QUANTITIES (CONTINUED)

PHASE	STAGE	LOCATION	STATION LIMITS	DIRECTION	JPCP	JPCP (RSC)	HMA (TYPE A)	CLASS 2 AGGREGATE BASE	REMOVE CONCRETE PAVEMENT AND BASE	EMBANKMENT (N)	ROADWAY EXCAVATION
					CY	CY	TON	CY	CY	CY	CY
2	1	#2 LANE	"A1" 381+00.0 TO "A1" 384+50.0	EASTBOUND		178.9	109.5		233.3		
		#2 LANE	"A1" 384+50.0 TO "A1" 400+15.0	EASTBOUND		799.9	489.7		1,043.3		
		#2 LANE	"A1" 400+15.0 TO "A1" 411+20.0	EASTBOUND	564.8		345.8		736.7		
		#2 LANE	"A1" 411+20.0 TO "A1" 437+52.0	EASTBOUND		1,345.2	823.6		1,754.7		
		#2 LANE	"A1" 437+52.0 TO "A1" 473+35.0	EASTBOUND	1,831.3		1,121.1		2,388.7		
		#2 LANE	"A1" 473+35.0 TO "A1" 489+00.0	EASTBOUND	799.9		489.7		1,043.3		
		#2 LANE	"A1" 489+00.0 TO "A1" 494+89.8	EASTBOUND	301.5		184.5		393.2		
		#2 LANE	"A1" 503+31.8 TO "A1" 547+85.0	EASTBOUND	2,276.1		1,393.4		2,968.8		
		#2 LANE	"A1" 547+85.0 TO "A1" 567+73.1	EASTBOUND	1,016.1		622.1		1,325.4		
		#2 LANE	"A1" 570+48.7 TO "A1" 677+26.4	EASTBOUND	5,457.5		3,341.1		7,118.5		
		#2 LANE	"A1" 679+32.1 TO "A1" 688+54.5	EASTBOUND		471.4	288.6		614.9		
		#3 LANE	"A1" 239+22.5 TO "A1" 251+00.0	EASTBOUND		702.1	429.8		785.0		
		#3 LANE	"A1" 251+00.0 TO "A1" 275+80.0	EASTBOUND	1,478.8		905.3		1,653.3		
		#3 LANE	"A1" 275+80.0 TO "A1" 280+00.0	EASTBOUND		250.4	153.3		280.0		
		#3 LANE	"A1" 280+00.0 TO "A1" 291+00.0	EASTBOUND	655.9		401.6		733.3		
		#3 LANE	"A1" 291+00.0 TO "A1" 309+95.0	EASTBOUND		968.6	592.9		1,263.3		
		#3 LANE	"A1" 309+95.0 TO "A1" 329+56.0	EASTBOUND	1,002.3		613.6		1,307.3		
		#3 LANE	"A1" 329+56.0 TO "A1" 334+86.0	EASTBOUND		270.9	165.8		353.3		
		#3 LANE	"A1" 334+86.0 TO "A1" 359+50.0	EASTBOUND	1,469.3		899.5		1,642.7		
		#3 LANE	"A1" 359+50.0 TO "A1" 381+00.0	EASTBOUND		1,282.0	784.9		1,433.3		
		#3,4 LANE	"A1" 381+00.0 TO "A1" 384+50.0	EASTBOUND	55.9	387.6	271.5		539.6		
		#3,4 LANE	"A1" 384+50.0 TO "A1" 400+00.0	EASTBOUND		1,716.5	1,061.0		2,066.7		
		#3 LANE	"A1" 400+00.0 TO "A1" 411+20.0	EASTBOUND	667.9		403.4		746.7		
		#3 LANE	"A1" 411+20.0 TO "A1" 437+52.0	EASTBOUND		1,345.2	823.6		1,754.7		
		#3 LANE	"A1" 437+52.0 TO "A1" 473+35.0	EASTBOUND	1,831.3		1,121.1		2,388.7		
		#3 LANE	"A1" 473+35.0 TO "A1" 489+00.0	EASTBOUND	933.2		571.3		1,043.3		
		#3 LANE	"A1" 489+00.0 TO "A1" 494+89.8	EASTBOUND	351.7		215.3		393.2		
		#3 LANE	"A1" 503+31.8 TO "A1" 547+85.0	EASTBOUND	2,655.4		1,625.6		2,968.8		
		#3 LANE	"A1" 547+85.0 TO "A1" 567+73.1	EASTBOUND	1,185.5		725.8		1,325.4		
		#3 LANE	"A1" 570+48.7 TO "A1" 677+26.4	EASTBOUND	6,367.1		3,897.9		7,118.5		
		#3 LANE	"A1" 679+32.1 TO "A1" 688+54.5	EASTBOUND		550.0	336.7		614.9		
		AUX LANE	"A1" 296+55.0	EASTBOUND		799.0	489.2				
		AUX LANE	"A1" 309+95.0 TO "A1" 329+56.0	EASTBOUND	1,169.3		715.9				
		AUX LANE	"A1" 329+56.0 TO "A1" 333+22.5	EASTBOUND		218.5	133.7				
		Shld	"A1" 239+22.5 TO "A1" 276+16.5	EASTBOUND			1,645.7	818.2			
		Shld	"A1" 296+62.0 TO "A1" 308+79.6	EASTBOUND			1,247.5	620.2			
		Shld	"A1" 308+79.6 TO "A1" 332+22.5	EASTBOUND			1,092.0	542.9			
		Shld	"A1" 337+22.5 TO "A1" 359+50.0	EASTBOUND			995.7	495.0			
		Shld	"A1" 381+00.0 TO "A1" 393+30.0	EASTBOUND			549.8	273.3			
		Shld	"A1" 402+17.0 TO "A1" 409+42.0	EASTBOUND			324.1	161.1			
		Shld	"A1" 473+35.0 TO "A1" 479+45.0	EASTBOUND			272.7	135.6			
		Shld	"A1" 515+50.0 TO "A1" 528+12.0	EASTBOUND			564.1	280.4			
		Shld	"A1" 534+05.0 TO "A1" 542+40.0	EASTBOUND			373.2	185.6			
		RAMP	"A1" 296+62.0 TO "A1" 308+79.6	EASTBOUND			1,247.5	620.2			
			"A1" 239+22.5 TO "A1" 542+40.0	EASTBOUND						3,642.0	9,057.0
PHASE 2 STAGE 1 SUBTOTAL (Q-2)					32,070.8	11,286.2	34,860.1	4,132.5	50,032.8	3,642.0	9,057.0
PHASE 2 STAGE 1 TOTAL					39,251.0	14,441.1	41,186.9	4,132.5	63,513.0	3,642.0	9,057.0
TOTAL Q-2					32,070.8	11,286.2	34,860.1	4,132.5	50,032.8	3,642.0	9,057.0

(N) NOT A SEPARATE PAY ITEM, FOR INFORMATION ONLY.

3 REVISED PER ADDENDUM No. 3 DATED MAY 19, 2011

SUMMARY OF QUANTITIES

Q-2

STATE OF CALIFORNIA - DEPARTMENT OF TRANSPORTATION
Caltrans
NORTH REGION
OFFICE OF DESIGN SOUTH
DESIGN BRANCH S7

FUNCTIONAL SUPERVISOR: CYRUS HUI
CALCULATED-DESIGNED BY: A. RANDHAWA
CHECKED BY: A. FONG
REVISED BY
DATE REVISED

LAST REVISION 00-00-00 | DATE PLOTTED => 19-MAY-2011 | TIME PLOTTED => 06:40

Dist	COUNTY	ROUTE	POST MILES TOTAL PROJECT	SHEET No.	TOTAL SHEETS
03	Yol,Sac	80	R10.9/R11.7, M0.0/M10.4	572	1012

REGISTERED CIVIL ENGINEER 6-15-10 DATE

9-7-10
PLANS APPROVAL DATE

REGISTERED PROFESSIONAL ENGINEER A. Y. FONG No. 64343 Exp 6-30-11 CIVIL STATE OF CALIFORNIA

THE STATE OF CALIFORNIA OR ITS OFFICERS OR AGENTS SHALL NOT BE RESPONSIBLE FOR THE ACCURACY OR COMPLETENESS OF SCANNED COPIES OF THIS PLAN SHEET.

3

ROADWAY AND EARTHWORK QUANTITIES (CONTINUED)

PHASE	STAGE	LOCATION	STATION LIMITS	DIRECTION	JPCP	JPCP (RSC)	HMA (TYPE A)	CLASS 2 AGGREGATE BASE	REMOVE CONCRETE PAVEMENT AND BASE	EMBANKMENT (N)	ROADWAY EXCAVATION
					CY	CY	TON	CY	CY	CY	CY
3	1	#3 LANE	"A1" 388+50.0 TO "A1" 398+50.0	WESTBOUND		1,107.4	678.0		1,333.3		
		#3 LANE	"A1" 398+50.0 TO "A1" 403+25.0	WESTBOUND	242.8		148.6		316.7		
		#3 LANE	"A1" 403+25.0 TO "A1" 413+00.0	WESTBOUND		498.3	305.1		650.0		
		#3 LANE	"A1" 413+00.0 TO "A1" 414+95.0	WESTBOUND	99.7		61.0		130.0		
		#3 LANE	"A1" 414+95.0 TO "A1" 425+30.0	WESTBOUND	617.2		377.8		690.0		
		#3 LANE	"A1" 425+30.0 TO "A1" 427+00.0	WESTBOUND	86.9		53.2		113.3		
		#3 LANE	"A1" 427+00.0 TO "A1" 432+00.0	WESTBOUND		255.6	156.5		333.3		
		#3 LANE	"A1" 432+00.0 TO "A1" 475+75.0	WESTBOUND	2,220.8		1,359.6		2,896.7		
		#3 LANE	"A1" 475+75.0 TO "A1" 481+67.0	WESTBOUND	370.9		227.1		414.7		
		#3 LANE	"A1" 481+67.0 TO "A1" 494+89.8	WESTBOUND	788.8		482.9		881.9		
		#3 LANE	"A1" 503+31.8 TO "A1" 550+12.0	WESTBOUND	2,790.8		1,708.5		3,120.1		
		#3 LANE	"A1" 550+12.0 TO "A1" 567+85.7	WESTBOUND	1,057.7		647.5		1,182.5		
		#3 LANE	"A1" 570+67.3 TO "A1" 677+26.4	WESTBOUND	6,356.0		3,891.1		7,106.1		
		#3 LANE	"A1" 679+32.1 TO "A1" 689+39.8	WESTBOUND		600.9	367.9		671.8		
		AUX LANE	"A1" 304+25.0	WESTBOUND		223.6	136.9				
		AUX LANE	"A1" 308+00.0 TO "A1" 334+00.0	WESTBOUND	1550.4		949.1				
		AUX LANE	"A1" 334+00.0 TO "A1" 337+90.0	WESTBOUND		232.6	142.4				
		Shld	"A1" 239+22.5 TO "A1" 271+25.5	WESTBOUND			1,426.3	709.1			
		Shld	"A1" 304+25.0 TO "A1" 337+90.0	WESTBOUND			1,504.2	747.8			
		Shld	"A1" 359+00.0 TO "A1" 371+40.0	WESTBOUND			554.3	275.6			
		Shld	"A1" 414+95.0 TO "A1" 425+30.0	WESTBOUND			462.6	230.0			
		Shld	"A1" 486+47.0 TO "A1" 492+93.0	WESTBOUND			288.8	143.6			
		Shld	"A1" 515+50.0 TO "A1" 522+84.0	WESTBOUND			328.1	163.1			
		Shld	"A1" 536+32.0 TO "A1" 542+40.0	WESTBOUND			271.8	135.1			
			"A1" 239+22.5 TO "A1" 542+40.0	WESTBOUND						3,642.0	9,057.0
PHASE 3 STAGE 1 SUBTOTAL (Q-4)					16,182.0	2,918.4	16,529.3	2,404.3	19,840.4	3,642.0	9,057.0
PHASE 3 STAGE 1 TOTAL					41,475.8	12,041.1	37,598.4	2,404.3	63,531.3	3,642.0	9,057.0
SUBTOTAL SHEET Q-1					98,836.1	3,154.9	60,910.5	5,482.7	13,637.5	18,169.0	69,951.0
SUBTOTAL SHEET Q-2					32,070.8	11,286.2	34,860.1	4,132.5	50,032.8	3,642.0	9,057.0
SUBTOTAL SHEET Q-3					25,293.8	9,122.7	21,069.1	0.0	43,690.9	0.0	0.0
TOTAL					172,382.7	26,482.2	133,369.0	12,019.5	127,201.6	25,453.0	88,065.0

(N) NOT A SEPARATE PAY ITEM, FOR INFORMATION ONLY.

HOT MIX ASPHALT (HMA) SUMMARY

DESCRIPTION	TON
HMA DIKE (FROM Q-8)	348.8
OVERSIDE DRAIN (FROM Q-8)	10.0
HMA (TYPE A) (FROM Q-4)	133,369.0
TOTAL	133,727.8

3 REVISED PER ADDENDUM No. 3 DATED MAY 19, 2011

SUMMARY OF QUANTITIES

Q-4

REVISED BY | DATE REVISED
A. RANDHAWA | A. FONG
CALCULATED-DESIGNED BY | CHECKED BY
FUNCTIONAL SUPERVISOR: CYRUS HUI

STATE OF CALIFORNIA - DEPARTMENT OF TRANSPORTATION
Caltrans
NORTH REGION
OFFICE OF DESIGN SOUTH
DESIGN BRANCH S7

LAST REVISION 00-00-00 | DATE PLOTTED => 19-MAY-2011 | TIME PLOTTED => 06:40

Dist	COUNTY	ROUTE	POST MILES TOTAL PROJECT	SHEET No.	TOTAL SHEETS
03	Yol, Sac	80	R10.9/R11.7, M0.0/M10.4	575	1012

REGISTERED CIVIL ENGINEER 6-15-10 DATE

9-7-10
PLANS APPROVAL DATE

REGISTERED PROFESSIONAL ENGINEER A. Y. FONG No. 64343 Exp. 6-30-11 CIVIL STATE OF CALIFORNIA

THE STATE OF CALIFORNIA OR ITS OFFICERS OR AGENTS SHALL NOT BE RESPONSIBLE FOR THE ACCURACY OR COMPLETENESS OF SCANNED COPIES OF THIS PLAN SHEET.

CONCRETE BARRIER (CONTINUED) 3

STATION LIMITS	LOCATION	TYPE 60	TYPE 60C	TYPE 60E	TYPE 60E Mod	TYPE 60G
		LF	LF	LF	LF	LF
"A1" 543+53.0 TO "A1" 568+10.2	MEDIAN	2,457.2				
"A1" 570+27.7 TO "A1" 571+00.0	MEDIAN		72.3			
"A1" 571+00.0 TO "A1" 583+43.0	MEDIAN	1,243.0				
"A1" 583+43.0 TO "A1" 584+57.0	MEDIAN			114.0		
"A1" 584+57.0 TO "A1" 595+56.0	MEDIAN	1,099.0				
"A1" 595+56.0 TO "A1" 596+92.0	MEDIAN				136.0	
"A1" 596+92.0 TO "A1" 622+20.0	MEDIAN	2,528.0				
"A1" 622+20.0 TO "A1" 623+71.0	MEDIAN				151.0	
"A1" 623+71.0 TO "A1" 638+50.0	MEDIAN	1,479.0				
"A1" 638+50.0 TO "A1" 640+50.0	MEDIAN		200.0			
"A1" 640+50.0 TO "A1" 644+36.0	MEDIAN	386.0				
"A1" 644+36.0 TO "A1" 646+61.0	MEDIAN				225.0	
"A1" 646+61.0 TO "A1" 652+40.0	MEDIAN	579.0				
"A1" 652+40.0 TO "A1" 654+14.0	MEDIAN				174.0	
"A1" 654+14.0 TO "A1" 676+00.0	MEDIAN	2,186.0				
"A1" 676+00.0 TO "A1" 677+00.0	MEDIAN		100.0			
"A1" 677+00.0 TO "A1" 677+56.4	MEDIAN	56.4				
"A1" 679+02.1 TO "A1" 689+24.3	MEDIAN/L†	1022.2				
"A2" 701+95.2 TO "A2" 712+01.0	L†	1,021.5				
"A2" 704+79.5 TO "A2" 712+00.0	R†	705.0				
"A2" 712+00.0 TO "A2" 713+00.0	R†		100.0			
"A2" 718+47.0 TO "A2" 720+36.4	R†					
"A2" 720+36.4 TO "S3" 725+37.3	R†	500.9				
"S3" 720+00.0 TO "A3" 725+37.3	R†	537.3				
"A3" 703+10.0 TO "A3" 713+12.0	R†		1002.0			
	SUBTOTAL	15,800.5	1,474.3	114.0	686.0	0.0
	SHEET Q-6 SUBTOTAL	19,904.8	3,311.0	901.0	1,224.0	3,903.2
	TOTAL	35,705.3	4,785.5	1015.0	1,910.0	3,903.2

MINOR CONCRETE (MINOR STRUCTURE)

LOCATION	MINOR CONCRETE (MINOR STRUCTURE)
	CY
SACRAMENTO RIVER BOH	1.6
NATOMAS EAST CANNAL BOH	3.2
RIO LINDA Blvd UC	3.2
WINTERS St UC	2.8
FROM DRAINAGE PLANS	379.8
TOTAL	390.6

6" PLASTIC PIPE

LOCATION	PLASTIC PIPE
	LF
"A2" 720+36.0 R†	8
TOTAL	8

CHAIN LINK FENCE (TYPE CL-6)

STATION LIMITS	LOCATION	LENGTH
	L†/R†	LF
"A1" 502+36.7 TO "A1" 502+45.0	L†/R†	148
"A1" 568+50.6 TO "A1" 568+57.7	L†/R†	149
"A2" 689+76.0 TO "A3" 690+52.0	L†/R†	124
	SUBTOTAL	421
	FROM SOUNDWALL QUANTITIES	15
	TOTAL	436

REMOVE CONCRETE

LOCATION	REMOVE CONCRETE
	CY
SACRAMENTO RIVER BOH	0.8
NATOMAS EAST CANNAL BOH	1.6
RIO LINDA Blvd UC	1.6
WINTERS St UC	1.6
LONGVIEW Dr OFF RAMP	6.0
TOTAL	11.6

REMOVE CONCRETE CURB

LOCATION	REMOVE CONCRETE CURB
	LF
FROM SOUNDWALL PLAN	850
"A3" 701+43.3 TO "A3" 702+12.5	64
TOTAL	914

REMOVE FENCE

STATION LIMITS	LOCATION	LENGTH
	L†/R†	LF
"A1" 495+24.2 TO "A1" 495+25.7	L†/R†	43
"A1" 502+36.7 TO "A1" 502+45.0	L†/R†	148
"A1" 568+50.6 TO "A1" 568+57.7	L†/R†	149
"A1" 570+23.7 TO "A1" 570+31.7	L†/R†	45
"A1" 677+57.5 TO "A1" 677+57.5	L†/R†	44
"A1" 679+01.0 TO "A1" 679+01.0	L†/R†	44
"A2" 689+76.0 TO "A3" 690+52.0	L†/R†	124
	SUBTOTAL	597
	FROM SOUNDWALL QUANTITIES	13,023
	TOTAL	13,620

TEMPORARY FENCE (TYPE ESA)

STATION LIMITS	LOCATION	LENGTH
		LF
"A1" 329+48.0 TO "A1" 331+38.0	R†	198.00
"A1" 330+78.0 TO "A1" 332+53.0	L†	182.00
"A1" 415+20.0 TO "A1" 415+70.0	L†	157.00
"A1" 482+49.0 TO "A1" 487+18.5	R†	1,599.00
"A1" 495+60.0 TO "A1" 496+18.3	L†	149.00
"A1" 495+59.4 TO "A1" 496+18.3	R†	323.00
"A1" 496+78.34	R†	317.00
"A1" 496+78.34 TO "A1" 499+32.0	L†	1,110.00
	TOTAL	4,035.00

3 REVISED PER ADDENDUM No. 3 DATED MAY 19, 2011

SUMMARY OF QUANTITIES

Q-7

REVISED BY | DATE REVISED
A. RANDHAWA | A. FONG
CALCULATED-DESIGNED BY | CHECKED BY
FUNCTIONAL SUPERVISOR: CYRUS HUI

STATE OF CALIFORNIA - DEPARTMENT OF TRANSPORTATION
Caltrans
NORTH REGION
OFFICE OF DESIGN SOUTH
DESIGN BRANCH S7

LAST REVISION 00-00-00 | DATE PLOTTED => 19-MAY-2011 | TIME PLOTTED => 06:40