DIST	COUNTY	ROUTE	POST MILES TOTAL PROJECT	SHEET No	TOTAL SHEETS
03	But	99	R32.4/R33.3	348	473

D. Mossman 2/11/10
REGISTERED CIVIL ENGINEER DATE

6-7-10
PLANS APPROVAL DATE

REGISTERED PROFESSIONAL ENGINEER Danny J Mossman No. C70850 Exp. 06/30/10 CIVIL STATE OF CALIFORNIA

The State of California or its officers or agents shall not be responsible for the accuracy or completeness of electronic copies of this plan sheet.

QUINCY ENGINEERING, INC
3247 Ramos Circle
Sacramento, CA 95827 - 2501

BUTTE COUNTY ASSOCIATION OF GOVERNMENTS
2580 SIERRA SUNRISE TERRACE, SUITE 100
CHICO, CA 95928

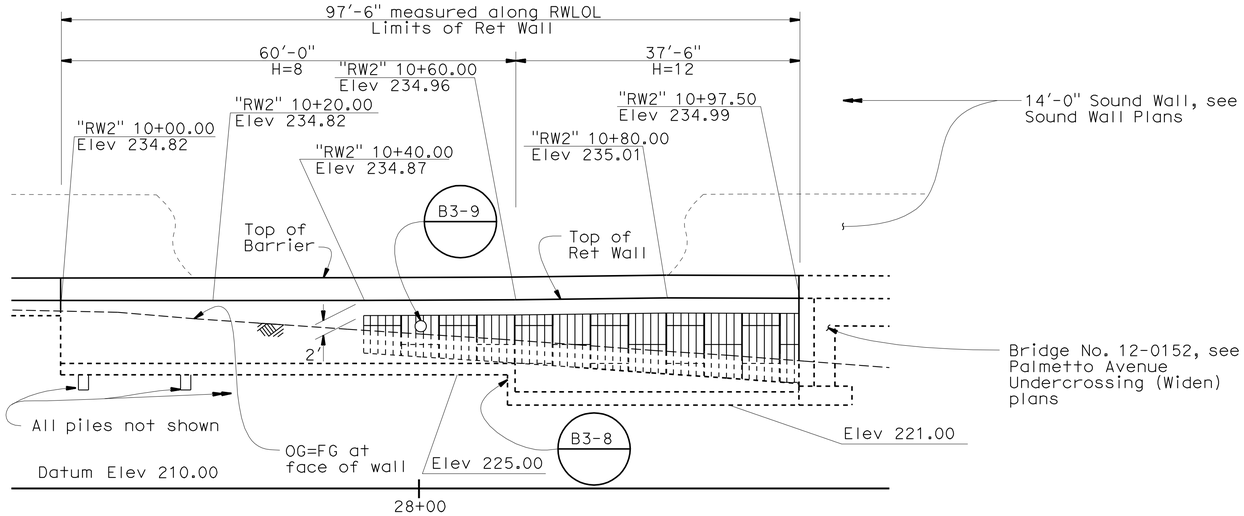

DEVELOPED ELEVATION

1"=10'

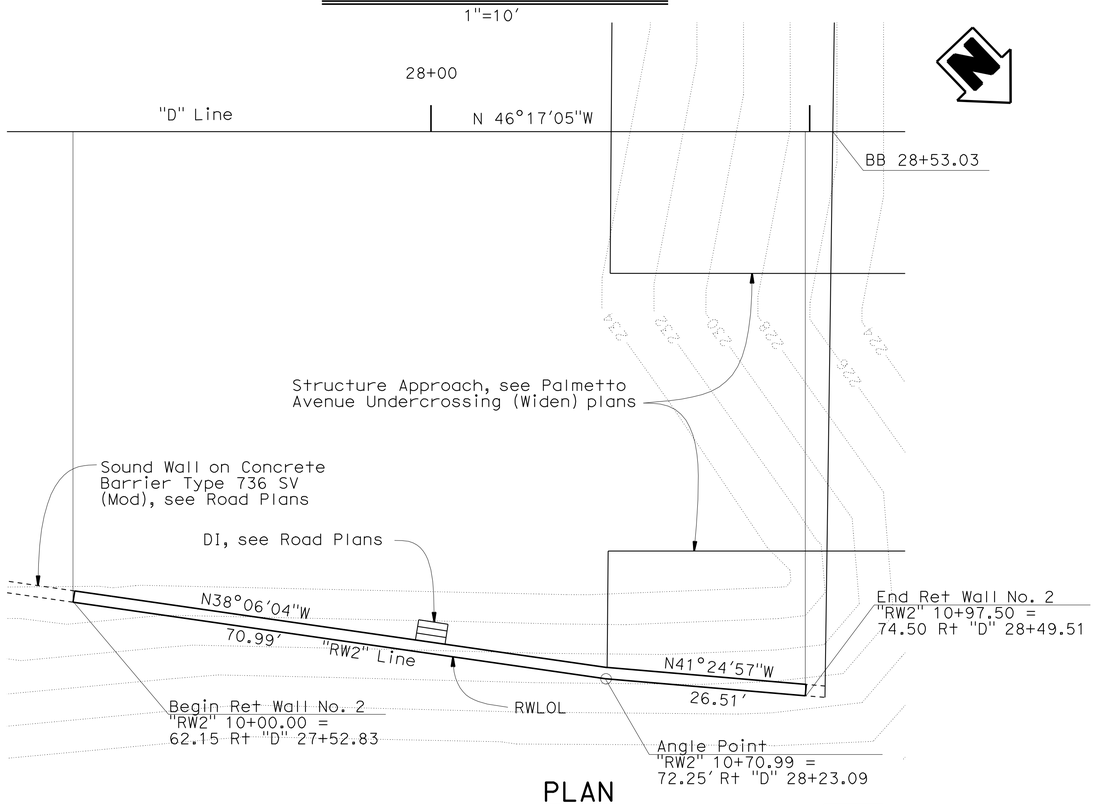

PLAN

1"=10'

RETAINING WALL No. 2 Br No. 2E0003

QUANTITIES:

STRUCTURE EXCAVATION (RETAINING WALL)	226	CY
STRUCTURE BACKFILL (RETAINING WALL)	244	CY
FURNISH STEEL PILING (HP 14 X 89)	519	LF
DRIVE STEEL PILE (HP 14 X 89)	19	EA
STRUCTURAL CONCRETE, RETAINING WALL	92	CY
ARCHITECTURAL SURFACE (FRACTURED RIB TEXTURE)	362	SQFT
BAR REINFORCING STEEL (RETAINING WALL)	13,685	LB
CONCRETE BARRIER (TYPE 736A MODIFIED)	98	LF

1

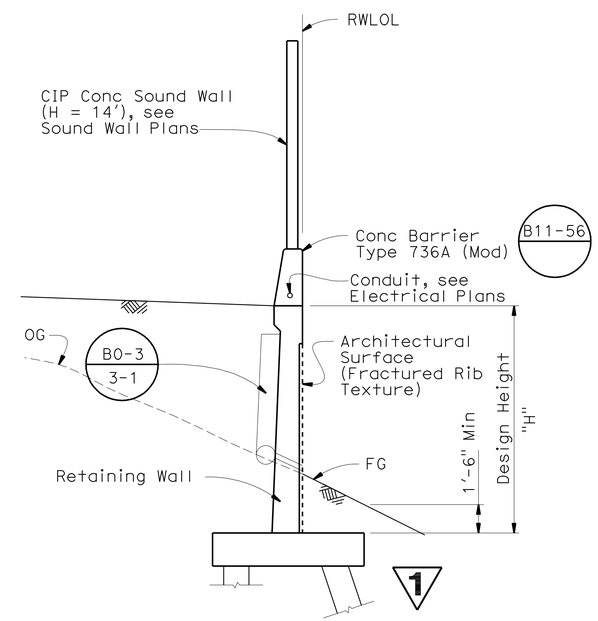

TYPICAL SECTION

No Scale

NOTES:

1. For Soundwall details, see Sound Wall Plans.
2. Top of wall elevations provided are approximate and for information only. Actual top of wall elevations shall match new roadway widening grades.

1 **REVISED PER ADDENDUM No. 1 DATED APRIL 21, 2011**

Eric D. Fredrickson
DESIGN OVERSIGHT Eric D. Fredrickson
4-13-11
SIGN OFF DATE

	BY	CHECKED
DESIGN	D. Mossman	E. Dahl
DETAILS	D. Mossman/J. Bland	E. Dahl
QUANTITIES	D. Mossman	E. Dahl

LOAD FACTOR DESIGN
LAYOUT BY D. Mossman CHECKED E. Dahl
SPECIFICATIONS BY T. Osterkamp PLANS AND SPECS COMPARED J. Quincy

PREPARED FOR THE STATE OF CALIFORNIA DEPARTMENT OF TRANSPORTATION

Tim Osterkamp
PROJECT ENGINEER

BRIDGE NO. 12E0003
POST MILES 33.0

RETAINING WALL No. 2
GENERAL PLAN

DESIGN GENERAL PLAN SHEET (ENGLISH) (REV. 06-01-09)

ORIGINAL SCALE IN INCHES FOR REDUCED PLANS 0 1 2 3

CU 03-199
EA 3A0421

DISREGARD PRINTS BEARING EARLIER REVISION DATES

REVISION DATES (PRELIMINARY STAGE ONLY) 11/16/09 1/7/09 1/20/10 2/1/10 2/11/10

SHEET 8 OF 29

FILE => 12-0003-a-gp01.add

USERNAME => trmikesl DATE PLOTTED => 20-APR-2011 TIME PLOTTED => 14:09

DIST	COUNTY	ROUTE	POST MILES TOTAL PROJECT	SHEET No	TOTAL SHEETS
03	But	99	R32.4/R33.3	349	473

D. Mossman 2/11/10
REGISTERED CIVIL ENGINEER DATE

6-7-10
PLANS APPROVAL DATE

REGISTERED PROFESSIONAL ENGINEER
Danny J Mossman
No. C70850
Exp. 06/30/11
CIVIL
STATE OF CALIFORNIA

The State of California or its officers or agents shall not be responsible for the accuracy or completeness of scanned copies of this plan sheet.

QUINCY ENGINEERING, INC
3247 Ramos Circle
Sacramento, CA 95827 - 2501

BUTTE COUNTY ASSOCIATION OF GOVERNMENTS
2580 SIERRA SUNRISE TERRACE, SUITE 100
CHICO, CA 95928

LEGEND:

Indicates Vertical pile

Indicates 1:3 Battered pile

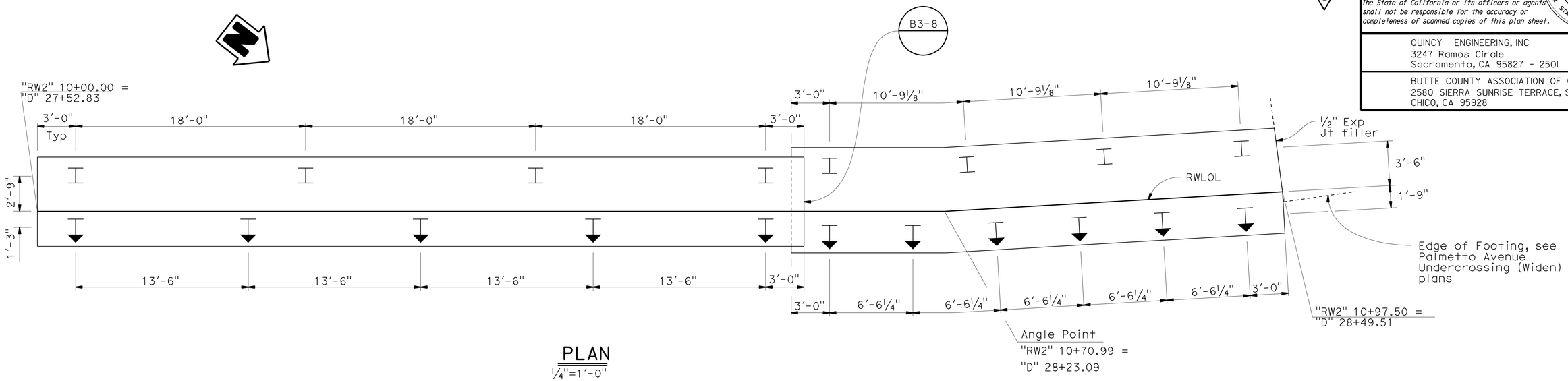

PLAN

1/4"=1'-0"

PILE DATA TABLE

LOCATION	PILE TYPE	DESIGN LOADING (LFD)	NOMINAL RESISTANCE		DESIGN TIP ELEVATION	SPECIFIED TIP ELEVATION
			COMPRESSION	TENSION		
10+00.00-10+60.00	HP 14 x 89	123 kips	164 kips	35 kips	199.0 (1), 215.0 (2) 200.0 (3)	199.5
10+60.00-10+97.50	HP 14 x 89	105 kips	140 kips	43 kips	194.5 (1), 207.5 (2) 195.0 (3)	194.5

NOTE: Design Tip Elevation is controlled by the following demands:
(1) Compression, (2) Tension, (3) Lateral Loads.

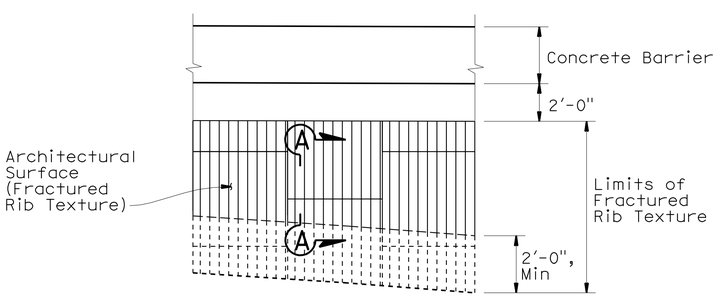

ARCHITECTURAL SURFACE DETAIL

No Scale

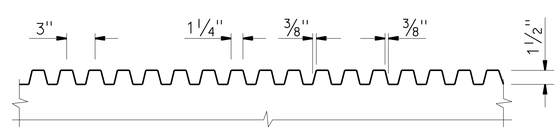

FRACTURED RIB TEXTURE DETAIL

No Scale

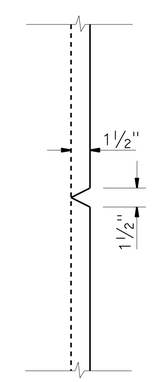

SECTION A-A

NO SCALE

1 REVISED PER ADDENDUM No. 1 DATED APRIL 21, 2011

Eric D. Fredrickson
DESIGN OVERSIGHT Eric D. Fredrickson
4-13-11
SIGN OFF DATE

	BY	CHECKED
DESIGN	D. Mossman	E. Dahl
DETAILS	J. Bland	E. Dahl
QUANTITIES	D. Mossman	E. Dahl

PREPARED FOR THE
STATE OF CALIFORNIA
DEPARTMENT OF TRANSPORTATION

Tim Osterkamp
PROJECT ENGINEER

BRIDGE NO. 12E0003
POST MILE 33.0

RETAINING WALL No. 2
DETAILS No. 1

DESIGN DETAIL SHEET (ENGLISH) (REV. 06-01-09)

ORIGINAL SCALE IN INCHES FOR REDUCED PLANS 0 1 2 3

CU 03-199
EA 3A0421

DISREGARD PRINTS BEARING EARLIER REVISION DATES

REVISION DATES (PRELIMINARY STAGE ONLY) 11/16/09 1/7/09 1/20/10 2/1/10 2/11/10

SHEET 9 OF 29

FILE => 12-0003-g-rwdt01.add

USERNAME => trmikesl DATE PLOTTED => 20-APR-2011 TIME PLOTTED => 14:09

DIST	COUNTY	ROUTE	POST MILES TOTAL PROJECT	SHEET No	TOTAL SHEETS
03	But	99	R32.4/R33.3	350	473

D. Mossman 2/11/10
REGISTERED CIVIL ENGINEER DATE

6-7-10
PLANS APPROVAL DATE

REGISTERED PROFESSIONAL ENGINEER
Danny J Mossman
No. C70850
Exp. 06/30/11
CIVIL
STATE OF CALIFORNIA

The State of California or its officers or agents shall not be responsible for the accuracy or completeness of scanned copies of this plan sheet.

QUINCY ENGINEERING, INC
3247 Ramos Circle
Sacramento, CA 95827 - 2501

BUTTE COUNTY ASSOCIATION OF GOVERNMENTS
2580 SIERRA SUNRISE TERRACE, SUITE 100
CHICO, CA 95928

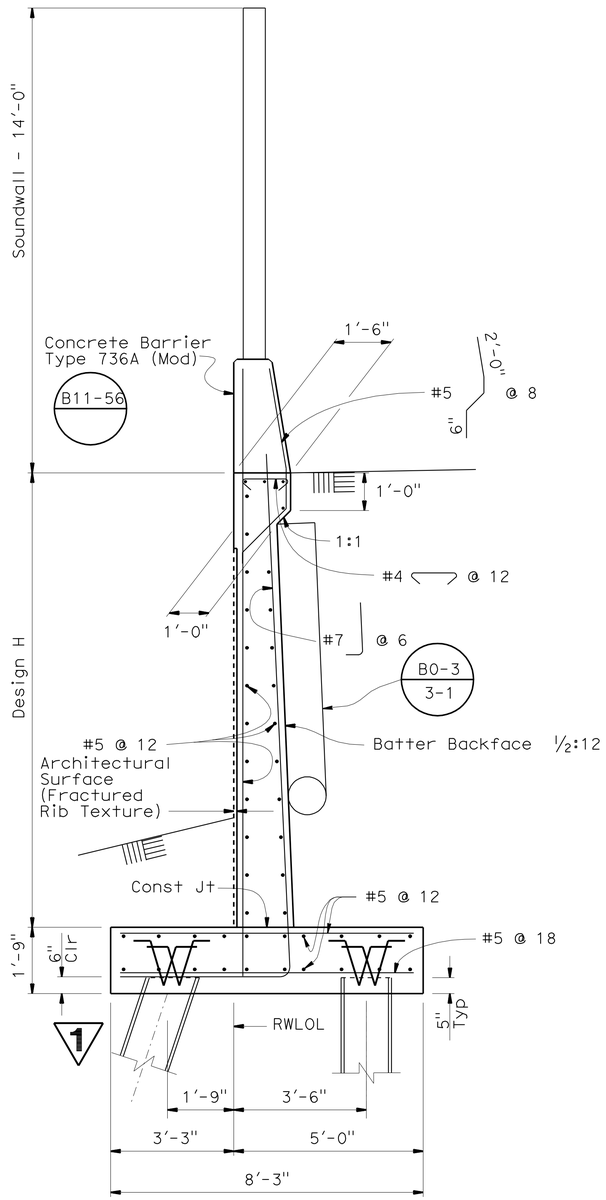

RET WALL SECTION (H=12)
1/2"=1'-0"

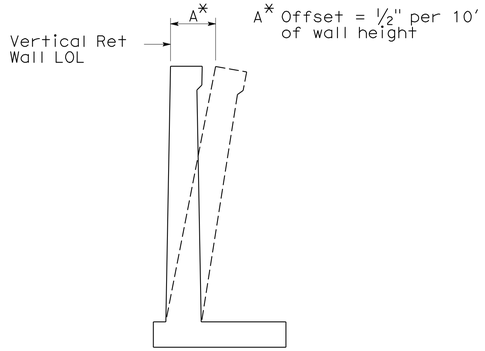

WALL OFFSET
NO SCALE
Values for offsetting forms to be determined by the engineer

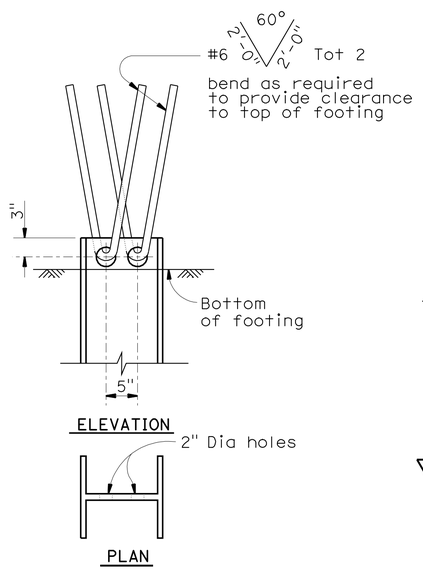

PILE ANCHOR
NO SCALE

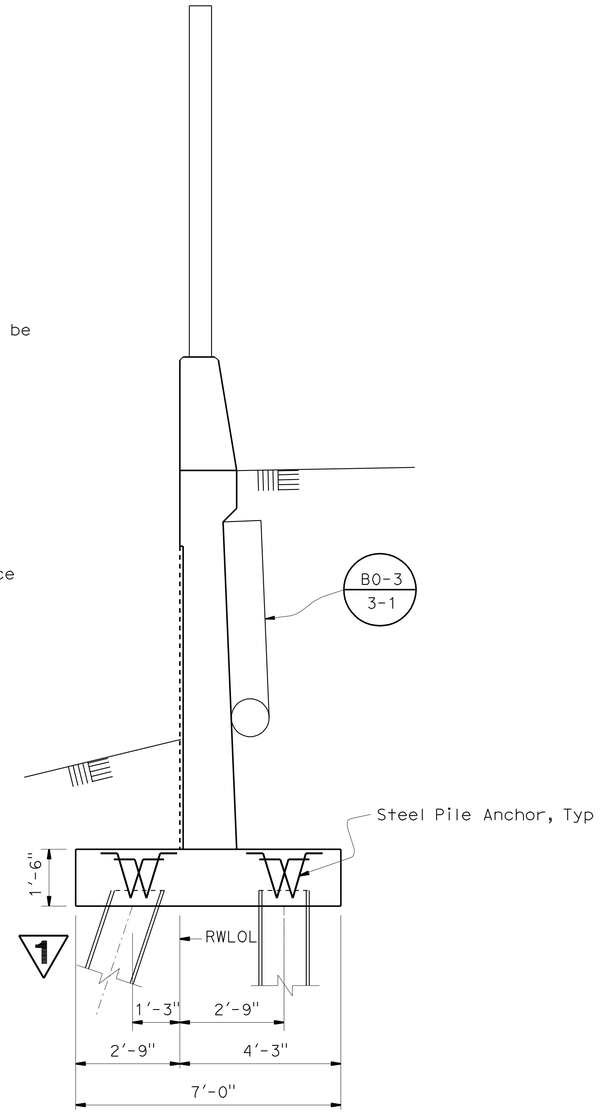

RET WALL SECTION (H=8)
1/2"=1'-0"

Design Data:

Design: Load Factor Design (LFD)

Concrete:
Reinforced Concrete, f'c = 3,600 psi
fy = 60,000 psi

Loading Case:
Level Ground with 240 psf live load surcharge and 14' CIP sound wall.
Seismic Load = 0.57 Dead Load
Wind Load = 33 psf
Dead Load of Soundwall = 1,100 lb/lf
Dead Load of Barrier = 560 lb/lf

Seismic Load: Soil
Kh = 0.3g
Kv = 0.0
Kae : Mononobe-Okabe Method

Soil: ø = 34° γ = 125 pcf

Load Combinations:
Group A: BD + 1.7E + 1.7SC
Group B: BD + 1.7E + 1.3W
Group C: BD + 1.3E + 1.0EQE
Group D: BD + 1.3E + 1.0EQD
Group E: BD + 1.1E + 0.85(EQE+EQD)
Where: B = 0.9 or 1.2 whichever controls design
D = Dead Load
E = Lateral Earth Pressure
SC = Live Load Surcharge
W = Wind Load
EQE = Seismic Earth Load
EQD = Seismic Dead Load

GENERAL NOTES:

1. 14" H-Piles are used for the design.
2. Minimum Distance between center pile and edge of footing is 1'-6".
3. Reduction Factors: ø= 0.90.
4. Lateral Resistance of each pile is 17 kips.
5. For sound wall and architectural treatment, see Sound Wall Plans.
6. Footing cover, 1'-6" minimum.
7. For sound wall and barrier reinforcement, see Sound Wall Plans and Standard Plans.

For details and reinforcement not shown see "Ret Wall Section (H=12)"

1 REVISED PER ADDENDUM No. 1 DATED APRIL 21, 2011

Eric D. Fredrickson
DESIGN OVERSIGHT Eric D. Fredrickson
4-13-11
SIGN OFF DATE

	BY	CHECKED
DESIGN	D. Mossman	E. Dahl
DETAILS	J. Bland	E. Dahl
QUANTITIES	D. Mossman	E. Dahl

PREPARED FOR THE STATE OF CALIFORNIA DEPARTMENT OF TRANSPORTATION

Tim Osterkamp
PROJECT ENGINEER

BRIDGE NO. 12E0003
POST MILE 33.0

RETAINING WALL No. 2
DETAILS No. 2

DESIGN DETAIL SHEET (ENGLISH) (REV. 06-01-09)

ORIGINAL SCALE IN INCHES FOR REDUCED PLANS 0 1 2 3

CU 03-199
EA 3A0421

DISREGARD PRINTS BEARING EARLIER REVISION DATES

REVISION DATES (PRELIMINARY STAGE ONLY) 11/16/09 1/7/09 1/20/10 2/11/10 2/11/10

SHEET 10 OF 29

FILE => 12-0003-g-rwdt02.add

USERNAME => trmikesl DATE PLOTTED => 20-APR-2011 TIME PLOTTED => 14:10

DIST	COUNTY	ROUTE	POST MILES TOTAL PROJECT	SHEET No	TOTAL SHEETS
03	But	99	R32.4/R33.3	372	473

REGISTERED CIVIL ENGINEER 2/11/10 DATE

6-7-10
PLANS APPROVAL DATE

REGISTERED PROFESSIONAL ENGINEER Tim Osterkamp No. 46783 Exp. 06/30/11 CIVIL STATE OF CALIFORNIA

The State of California or its officers or agents shall not be responsible for the accuracy or completeness of scanned copies of this plan sheet.

QUINCY ENGINEERING, INC
3247 Ramos Circle
Sacramento, CA 95827 - 2501

BUTTE COUNTY ASSOCIATION OF GOVERNMENTS
2580 SIERRA SUNRISE TERRACE, SUITE 100
CHICO, CA 95928

1 BIDWELL PARK VIADUCT (WIDEN) Br No. 12-0151

QUANTITIES:

PREPARE CONCRETE BRIDGE DECK SURFACE	102,853	SQFT
ACCESS OPENING, SOFFIT	18	EA
ACCESS OPENING, SOFFIT EXTENSION	18	EA
STRUCTURE EXCAVATION (BRIDGE)	2,383	CY
STRUCTURE EXCAVATION (TYPE D)	942	CY
STRUCTURE BACKFILL (BRIDGE)	2,334	CY
FURNISH STEEL PILING (HP 14 X 89)	2,034	LF
DRIVE STEEL PILE (HP 14 X 89)	60	EA
STRUCTURAL CONCRETE, BRIDGE FOOTING	916	CY
STRUCTURAL CONCRETE, BRIDGE	3,661	CY
STRUCTURAL CONCRETE, APPROACH SLAB (TYPE N)	168	CY
DIAPHRAGM BOLSTER	18	EA
ARCHITECTURAL SURFACE (FRACTURED RIB TEXTURE)	134	SQFT
DRILL AND BOND DOWEL	921	LF
CLEAN EXPANSION JOINT	375	LF
FURNISH POLYESTER CONCRETE OVERLAY	7,715	CF
PLACE POLYESTER CONCRETE OVERLAY	102,853	SQFT
CORE CONCRETE (6")	198	LF
CORE CONCRETE (9")	5	LF
JOINT SEAL (MR 1 1/2 ")	703	LF
BAR REINFORCING STEEL (BRIDGE)	1,437,820	LB
MISCELLANEOUS METAL(RESTRAINER - PIPE TYPE)	6,765	LB
MISCELLANEOUS METAL(RESTRAINER - CABLE TYPE)	45,838	LB
MISCELLANEOUS METAL (BRIDGE)	621	LB
BRIDGE DECK DRAINAGE SYSTEM	11,316	LB
CONCRETE BARRIER (TYPE 60A MODIFIED)	762	LF
CONCRETE BARRIER (TYPE 736 MODIFIED)	1,526	LF

GENERAL NOTES
LOAD AND RESISTANCE FACTOR DESIGN

DESIGN: AASHTO LRFD Bridge Design Specifications 4rd Edition with Interims through 2008 and the Caltrans Admendments V.4; except that abutments, Standard Plans dated May 2006, Revised Standard Plans dated October 2007,and Standard Bridge Details XS sheets are designed using Bridge Design Specifications (1996 AASHTO w/ Revisions by Caltrans).

DEAD LOAD: Includes 35 psf for future wearing surface

SEISMIC DESIGN: Caltrans Seismic Design Criteria (SDC), Version 1.4 June 2006

LIVE LOADING: HL93 and permit design load

SEISMIC LOADING: Soil profile Type D
Magnitude 6.5 ± 0.25
Peak Rock Acceleration = 0.2 g

REINFORCED CONCRETE: f_y = 60 ksi
f'_c = 3.6 ksi
n = 8

FOOTING PRESSURE: See "Foundation Plan No. 2" sheet

SOUND WALL: The sound wall dead load is distributed to the left and right structures of the bridge with 100% of the moment and 100% of the shear forces to the new exterior girders.

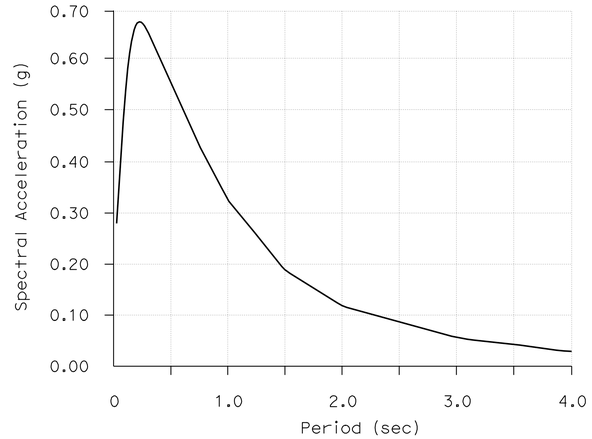

ACCELERATION RESPONSE SPECTRA CURVE
NO SCALE

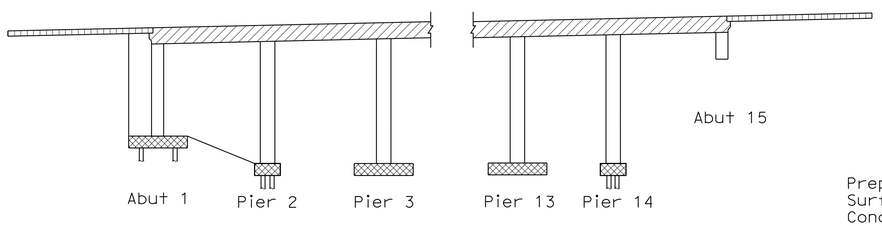

CONCRETE STRENGTH AND TYPE LIMITS
NO SCALE

- Structural Concrete, Bridge (f'c = 4.5 ksi at 28 days)
- Structural Concrete, Bridge
- Structural Concrete, Bridge Footing
- Structural Concrete, Approach Slab

STANDARD PLANS DATED MAY 2006

A10A	Acronyms and Abbreviations (Sheet 1 of 2)
A10B	Acronyms and Abbreviations (Sheet 2 of 2)
A10C	Symbols (Sheet 1 of 2)
A10D	Symbols (Sheet 2 of 2)
A62C	Limits of Payment for Excavation and Backfill- Bridge
B0-1	Bridge Details
B0-3	Bridge Details
B0-5	Bridge Details
B0-13	Bridge Details
B3-8	Retaining Wall Details No. 1
B7-1	Box Girder Details
B7-6	Deck Drains - Types D-1 and D-2
B7-8	Deck Drainage Details
B7-10	Utility Opening - Box Girder
B11-56	Concrete Barrier Type 736
B14-5	Water Supply Line (Details)
S2	Overhead Signs - Truss, Single Post Type - Post Types II through Type IX
S3	Overhead Signs - Truss, Single Post Type - Base Plate and Anchorage Details

REVISED STANDARD PLANS OCTOBER 2007

RSP A76A	Concrete Barrier Type 60
RSP B6-21	Joint Seals (Maximum Movement Rating = 2")
RSP ES-9C	Electrical Systems (Electrical Details, Structure Installations)

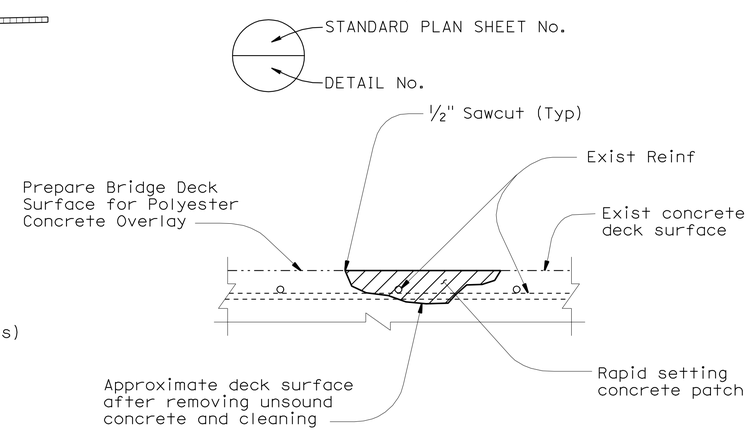

DECK REPAIR DETAIL
NO SCALE

Locations to be determined by the Engineer. Reinforcement may be encountered during deck concrete removal.

1 **REVISED PER ADDENDUM No. 1 DATED APRIL 21, 2011**

DESIGN OVERSIGHT Eric D. Fredrickson
4-13-11
SIGN OFF DATE

	BY	CHECKED
DESIGN	M. Katt	V. Doctolero/ E. Dahl
DETAILS	J. Bland	M. Quest
QUANTITIES	M. Katt	M. O'Hagan

PREPARED FOR THE STATE OF CALIFORNIA DEPARTMENT OF TRANSPORTATION

Tim Osterkamp
PROJECT ENGINEER

BRIDGE NO. 12-0151
POST MILE 32.6

BIDWELL PARK VIADUCT (WIDEN)
GENERAL NOTES

DESIGN DETAIL SHEET (ENGLISH) (REV. 06-01-09)

ORIGINAL SCALE IN INCHES FOR REDUCED PLANS 0 1 2 3

CU 03-199
EA 3A0421

DISREGARD PRINTS BEARING EARLIER REVISION DATES

REVISION DATES (PRELIMINARY STAGE ONLY) 9/19/08 9/17/09 11/18/09 1/20/10 2/4/10 2/11/10

SHEET 3 OF 75

FILE => 12-0151rl-b-gnote.add

USERNAME => trmikes1 DATE PLOTTED => 20-APR-2011 TIME PLOTTED => 14:10

NOTES:

1. For Left Structure, deck thickness is 7⅛" for span 1 through span 6 and 10" for span 7 though span 10. For Left Structure, soffit thickness is 6" for span 1 through span 5 and 6¼" for span 6 through span 10.
2. For Right Structure, deck thickness is 7⅛" for span 1 through span 5, 7¾" for span 6 and 10" for span 7 through span 10. For Right Structure, soffit thickness is 6" for span 1 through span 6 and 6¼" for span 7 through span 10.
3. Deck thickness of middle bay of Median Structure is 9⅛" along entire length of Median Structure.
4. Fillets are 2" for span 7 through span 10 of Left Structure and Right Structure.
5. Deck cross slope of Median Structure varies. Median Structure deck cross slope is straight line between edge of existing bridge decks and profile grade.
6. Polyester Concrete Overlay not shown. Prepare Concrete Bridge Deck Surface and overlay full deck width (new and existing structures including approach slabs) with 3/4 " minimum and varies Polyester Concrete. For limits, see "Construction Sequence No. 3" sheet.
7. For existing barrier and bridge removal details, see "Pier 2 Layout" sheet.
8. Concrete Barrier Type 736 (Mod) has modified concrete dimensions and additional reinforcement at soundwall locations.

1

LEGEND:

-·-·-·- Indicates existing bridge

DIST	COUNTY	ROUTE	POST MILES TOTAL PROJECT	SHEET No	TOTAL SHEETS
03	But	99	R32.4/R33.3	398	473

REGISTERED CIVIL ENGINEER 2/11/10 DATE

6-7-10
PLANS APPROVAL DATE

The State of California or its officers or agents shall not be responsible for the accuracy or completeness of scanned copies of this plan sheet.

REGISTERED PROFESSIONAL ENGINEER Tim Osterkamp No. 46783 Exp. 06/30/11 CIVIL STATE OF CALIFORNIA

QUINCY ENGINEERING, INC
3247 Ramos Circle
Sacramento, CA 95827 - 2501

BUTTE COUNTY ASSOCIATION OF GOVERNMENTS
2580 SIERRA SUNRISE TERRACE, SUITE 100
CHICO, CA 95928

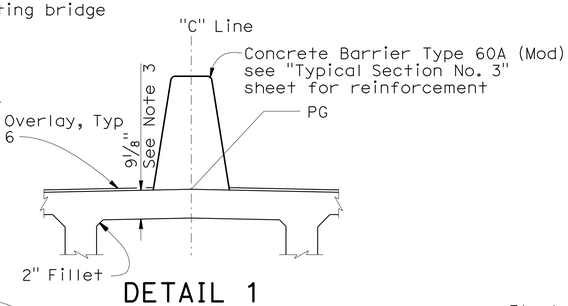

DETAIL 1
No Scale

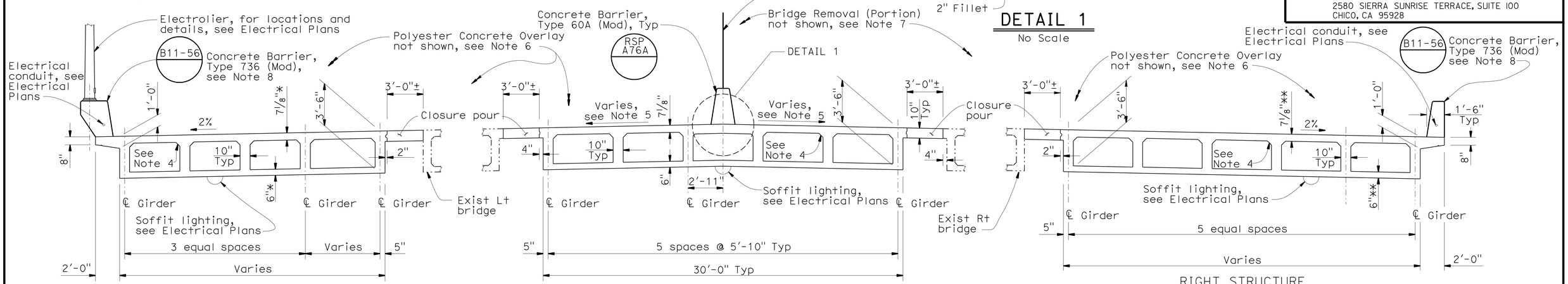

LEFT STRUCTURE
* See Note 1

MEDIAN STRUCTURE

RIGHT STRUCTURE
** See Note 2

TYPICAL SECTION AT CENTERLINE SPAN 1 (B0-5 / B7-1)
¼"=1'-0"

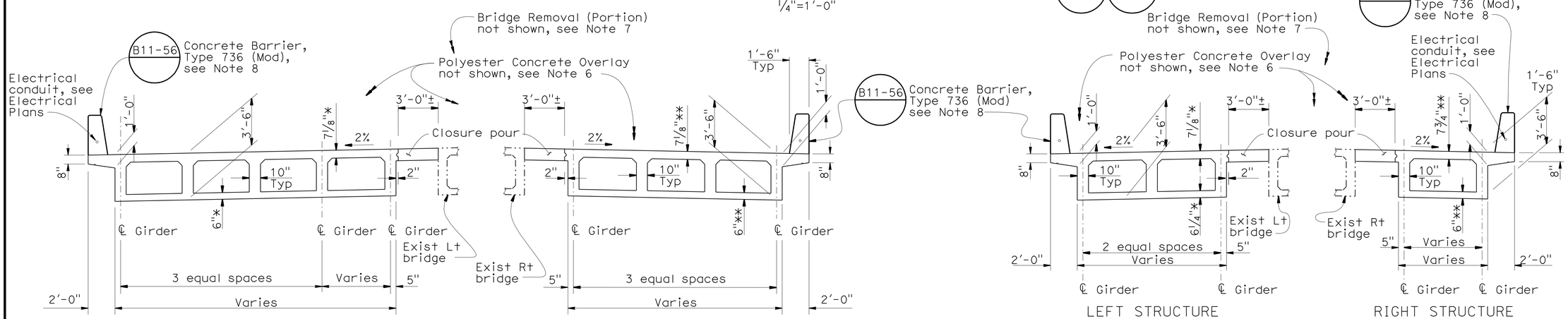

LEFT STRUCTURE
* See Note 1

RIGHT STRUCTURE
** See Note 2

TYPICAL SECTION AT CENTERLINE SPAN 4 (B0-5 / B7-1)
¼"=1'-0"

TYPICAL SECTION AT CENTERLINE SPAN 6 (B0-5 / B7-1)
¼"=1'-0"

Note:
The Contractor shall verify all controlling field dimensions before ordering or fabricating any material.

1 **REVISED PER ADDENDUM No. 1 DATED APRIL 21, 2011**

Eric D. Fredrickson
DESIGN OVERSIGHT Eric D. Fredrickson
4-13-11
SIGN OFF DATE

	BY	CHECKED
DESIGN	M. Katt	V. Doctolero/ E. Dahl
DETAILS	J. Bland	M. Quest
QUANTITIES	M. Katt	M. O'Hagan

PREPARED FOR THE STATE OF CALIFORNIA DEPARTMENT OF TRANSPORTATION

Tim Osterkamp
PROJECT ENGINEER

BRIDGE NO. 12-0151
POST MILE 32.6

BIDWELL PARK VIADUCT (WIDEN)
TYPICAL SECTION No. 1

DESIGN DETAIL SHEET (ENGLISH) (REV. 06-01-09)

ORIGINAL SCALE IN INCHES FOR REDUCED PLANS 0 1 2 3

CU 03-199
EA 3A0421

DISREGARD PRINTS BEARING EARLIER REVISION DATES

REVISION DATES (PRELIMINARY STAGE ONLY) 9/19/08 8/27/09 11/18/09 1/20/10 2/1/10 2/11/10

SHEET 29 OF 75

FILE => 12-0151rl-k-ts01.dgn

USERNAME => trmikes! DATE PLOTTED => 20-APR-2011 TIME PLOTTED => 14:10

DIST	COUNTY	ROUTE	POST MILES TOTAL PROJECT	SHEET No	TOTAL SHEETS
03	But	99	R32.4/R33.3	399	473

REGISTERED CIVIL ENGINEER 2/11/10 DATE

6-7-10
PLANS APPROVAL DATE

REGISTERED PROFESSIONAL ENGINEER Tim Osterkamp No. 46783 Exp. 06/30/11 CIVIL STATE OF CALIFORNIA

The State of California or its officers or agents shall not be responsible for the accuracy or completeness of scanned copies of this plan sheet.

QUINCY ENGINEERING, INC
3247 Ramos Circle
Sacramento, CA 95827 - 2501

BUTTE COUNTY ASSOCIATION OF GOVERNMENTS
2580 SIERRA SUNRISE TERRACE, SUITE 100
CHICO, CA 95928

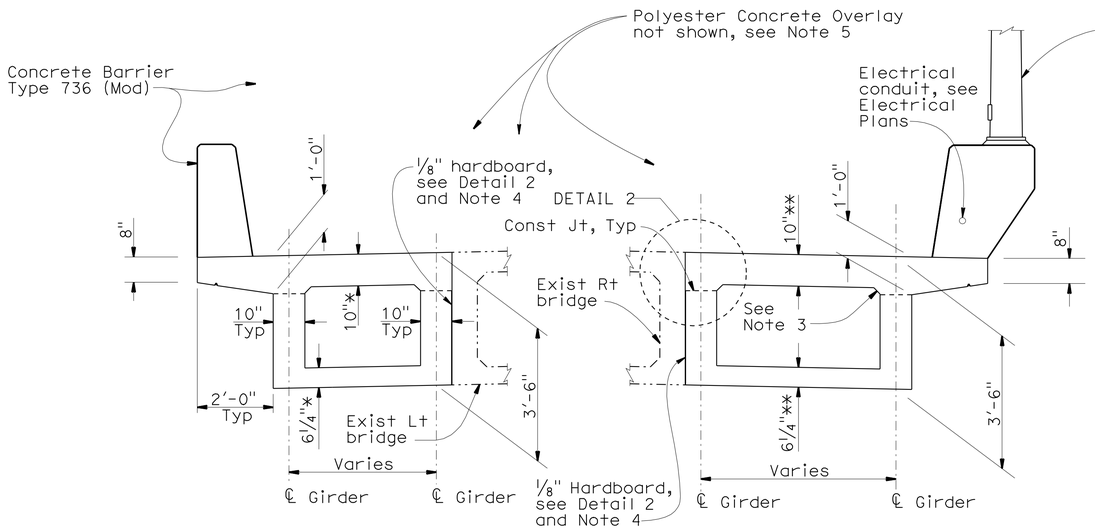

LEFT STRUCTURE
* See Note 1

RIGHT STRUCTURE
** See Note 2

TYPICAL SECTION AT CENTERLINE SPAN 8

1/2"=1'-0"

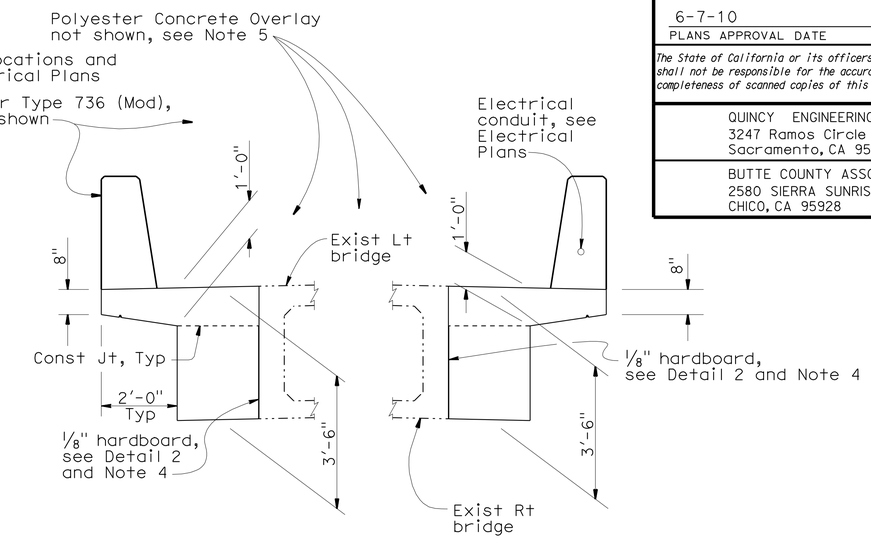

LEFT STRUCTURE

RIGHT STRUCTURE

TYPICAL SECTION AT CENTERLINE SPAN 13

1/2"=1'-0"

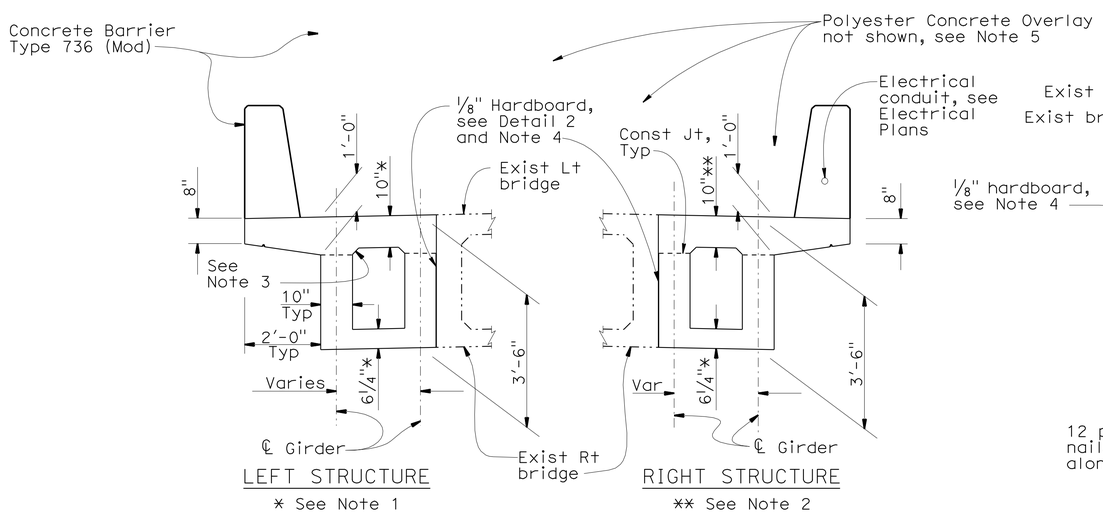

LEFT STRUCTURE
* See Note 1

RIGHT STRUCTURE
** See Note 2

TYPICAL SECTION AT CENTERLINE SPAN 10

1/2"=1'-0"

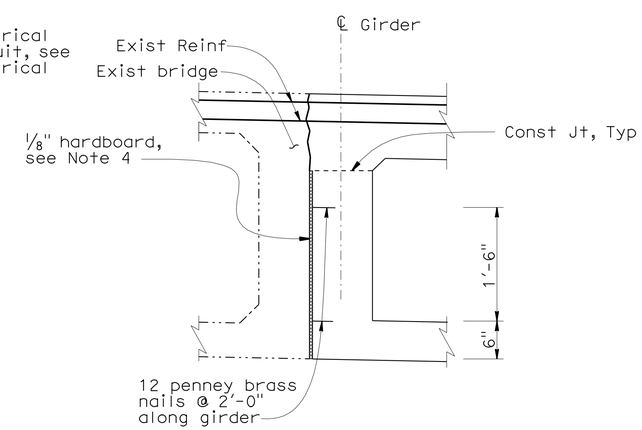

DETAIL 2

No Scale

LEGEND:

—··—·· Indicates existing bridge

NOTES:

1. For Left Structure, deck thickness is 7 1/8" for span 1 through span 6, and 10" for span 7 though span 10. For Left Structure, soffit thickness is 6" for span 1 through span 5 and 6 1/4" for span 6 through span 10.
2. For Right Structure, deck thickness is 7 1/8" for span 1 through span 5, 7 3/4" for span 6, and 10" for span 7 through span 10. For Right Structure, soffit thickness is 6" for span 1 through span 6 and 6 1/4" for span 7 through span 10.
3. Fillets are 2" for span 7 through span 10 of Left Structure and Right Structure. All other fillets are 4".
4. For Left and Right Structures, place 1/8" hardboard between existing exterior girder and new girder vertical faces. Hardboard to extend from soffit to construction joint between stem and deck.
5. (1) Polyester Concrete Overlay not shown. Prepare Concrete Bridge Deck Surface and overlay full deck width (new and existing structures including approach slabs) with 3/4" minimum and varies Polyester Concrete. For limits, see "Constuction Sequence No. 3" sheet.

Note:
The Contractor shall verify all controlling field dimensions before ordering or fabricating any material.

(1) **REVISED PER ADDENDUM No. 1 DATED APRIL 21, 2011**

Eric D. Fredrickson
DESIGN OVERSIGHT Eric D. Fredrickson
4-13-11
SIGN OFF DATE

	BY	CHECKED
DESIGN	M. Katt	V. Doctolero/ E. Dahl
DETAILS	J. Bland	M. Quest
QUANTITIES	M. Katt	M. O'Hagan

PREPARED FOR THE STATE OF CALIFORNIA DEPARTMENT OF TRANSPORTATION

Tim Osterkamp
PROJECT ENGINEER

BRIDGE NO. 12-0151
POST MILE 32.6

BIDWELL PARK VIADUCT (WIDEN)
TYPICAL SECTION No. 2

DESIGN DETAIL SHEET (ENGLISH) (REV. 06-01-09)

ORIGINAL SCALE IN INCHES FOR REDUCED PLANS 0 1 2 3

CU 03-199
EA 3A0421

DISREGARD PRINTS BEARING EARLIER REVISION DATES

REVISION DATES (PRELIMINARY STAGE ONLY): 9/18/08 8/27/09 11/18/09 1/28/10 2/1/10 2/11/10

SHEET 30 OF 75

FILE => 12-0151rl-k-ts02.add

USERNAME => trmikesl DATE PLOTTED => 20-APR-2011 TIME PLOTTED => 14:10

DIST	COUNTY	ROUTE	POST MILES TOTAL PROJECT	SHEET No	TOTAL SHEETS
03	But	99	R32.4/R33.3	400	473

REGISTERED CIVIL ENGINEER 2/11/10 DATE

6-7-10
PLANS APPROVAL DATE

REGISTERED PROFESSIONAL ENGINEER Tim Osterkamp No. 46783 Exp. 06/30/11 CIVIL STATE OF CALIFORNIA

The State of California or its officers or agents shall not be responsible for the accuracy or completeness of scanned copies of this plan sheet.

QUINCY ENGINEERING, INC
3247 Ramos Circle
Sacramento, CA 95827 - 2501

BUTTE COUNTY ASSOCIATION OF GOVERNMENTS
2580 SIERRA SUNRISE TERRACE, SUITE 100
CHICO, CA 95928

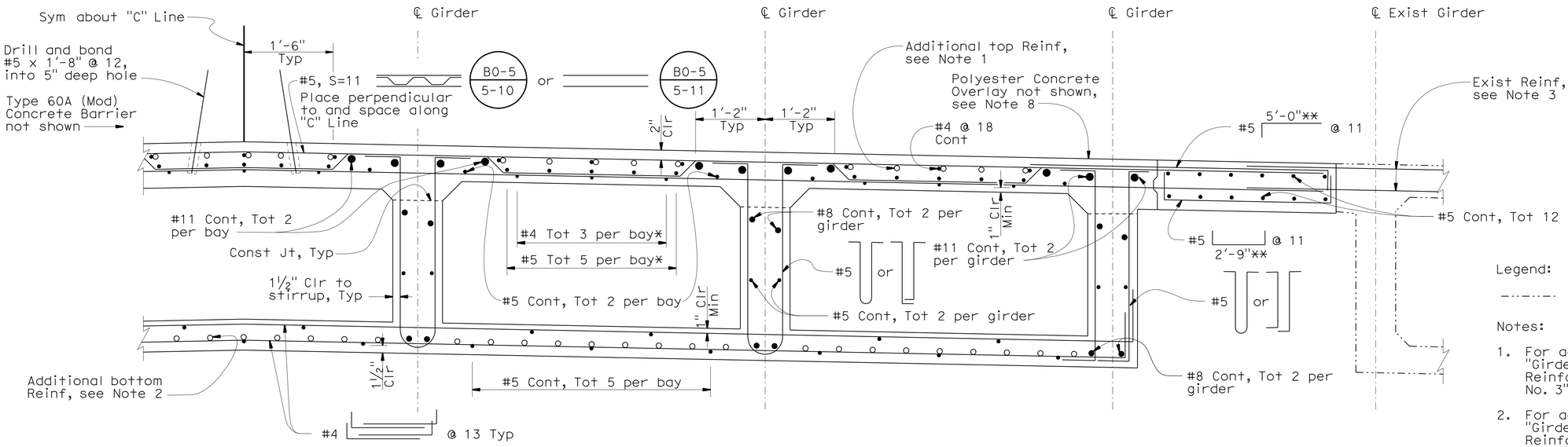

* Distribution Reinf

** Tie with deck Reinf

PART TYPICAL SECTION AT MEDIAN

B0-5 / B7-1

1"=1'-0"

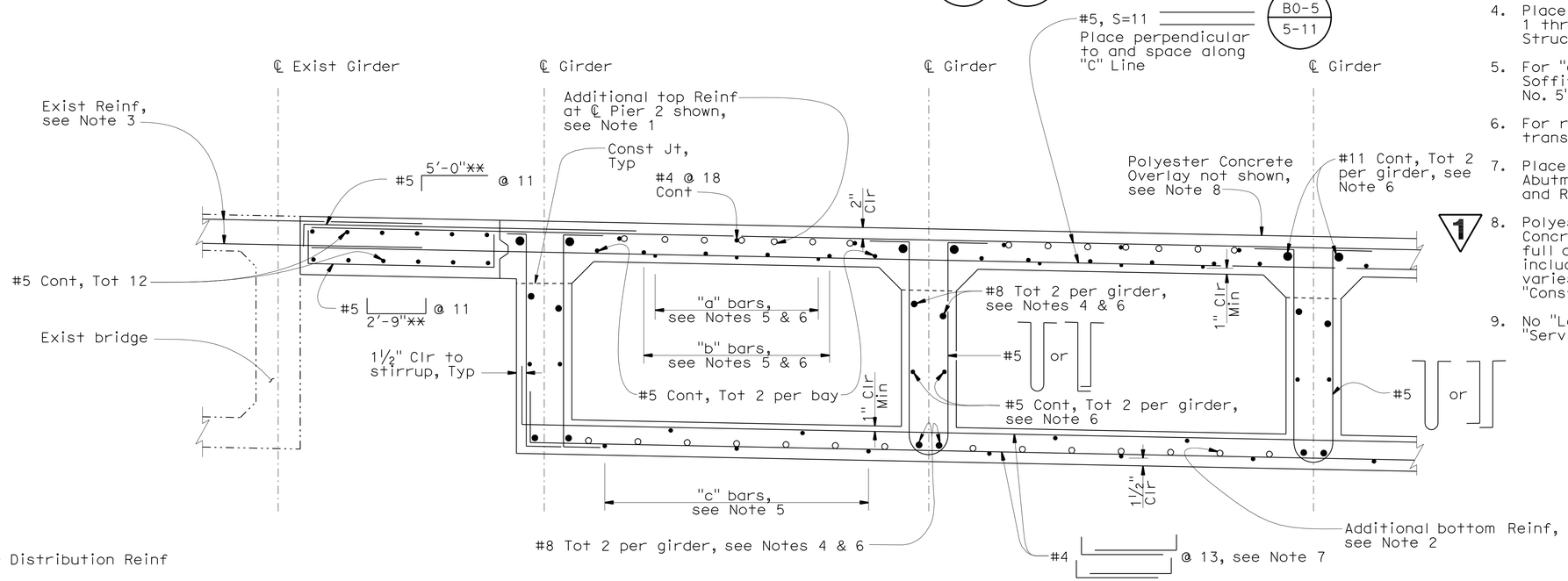

* Distribution Reinf

** Tie with deck Reinf

PART TYPICAL SECTION AT CENTERLINE SPAN 1 RIGHT

B0-5 / B7-1

1"=1'-0"

Right Structure Shown, Left Structure Similar

1 REVISED PER ADDENDUM No. 1 DATED APRIL 21, 2011

Legend:

Indicates existing bridge

Notes:

1. For additional top reinforcement, see "Girder Reinforcement No. 1", "Girder Reinforcement No. 2", "Girder Reinforcement No. 3", and "Girder Reinforcement No. 4" sheets.
2. For additional bottom reinforcement, see "Girder Reinforcement No. 5", "Girder Reinforcement No. 6", "Girder Reinforcement No. 7", and "Girder Reinforcement No. 8" sheets.
3. Existing transverse reinforcement in overhang removal portion to remain.
4. Place #8 continuous, total 2 per girder for span 1 through span 6 on Left Structure and Right Structure.
5. For "a", "b", and "c" bars, see Deck and Soffit Reinforcement Table on "Typical Section No. 5" sheet.
6. For reinforcement details at locations of girder transitions, see "Typical Section No. 6" sheet.
7. Place #4 transverse soffit reinforcement from Abutment 1 to Pier 11 of both Left Structure and Right Structure.
8. Polyester Concrete Overlay not shown. Prepare Concrete Bridge Deck Surface and overlay full deck width (new and existing structures including approach slabs) with ¾" minimum and varies Polyester Concrete. For limits, see "Construction Sequence No. 3" sheet.
9. No "Lap" splices for #8 reinforcement or larger. "Service" splices only.

Note:
The Contractor shall verify all controlling field dimensions before ordering or fabricating any material.

Eric D. Fredrickson
DESIGN OVERSIGHT Eric D. Fredrickson
4-13-11
SIGN OFF DATE

	BY	CHECKED
DESIGN	M. Katt	V. Doctolero/ E. Dahl
DETAILS	J. Bland	M. Quest
QUANTITIES	M. Katt	M. O'Hagan

PREPARED FOR THE STATE OF CALIFORNIA DEPARTMENT OF TRANSPORTATION

Tim Osterkamp
PROJECT ENGINEER

BRIDGE NO. 12-0151
POST MILE 32.6

BIDWELL PARK VIADUCT (WIDEN)
TYPICAL SECTION No. 3

DESIGN DETAIL SHEET (ENGLISH) (REV. 06-01-09)

ORIGINAL SCALE IN INCHES FOR REDUCED PLANS 0 1 2 3

CU 03-199
EA 3A0421

DISREGARD PRINTS BEARING EARLIER REVISION DATES

REVISION DATES (PRELIMINARY STAGE ONLY): 9/19/08 9/17/09 11/18/09 1/20/10 2/3/10 2/11/10

SHEET 31 OF 75

FILE => 12-0151rl-k-ts03.add

USERNAME => trmikest DATE PLOTTED => 20-APR-2011 TIME PLOTTED => 14:10

DIST	COUNTY	ROUTE	POST MILES TOTAL PROJECT	SHEET No	TOTAL SHEETS
03	But	99	R32.4/R33.3	401	473

REGISTERED CIVIL ENGINEER 2/11/10 DATE

6-7-10
PLANS APPROVAL DATE

REGISTERED PROFESSIONAL ENGINEER Tim Osterkamp No. 46783 Exp. 06/30/11 CIVIL STATE OF CALIFORNIA

The State of California or its officers or agents shall not be responsible for the accuracy or completeness of scanned copies of this plan sheet.

QUINCY ENGINEERING, INC
3247 Ramos Circle
Sacramento, CA 95827 - 2501

BUTTE COUNTY ASSOCIATION OF GOVERNMENTS
2580 SIERRA SUNRISE TERRACE, SUITE 100
CHICO, CA 95928

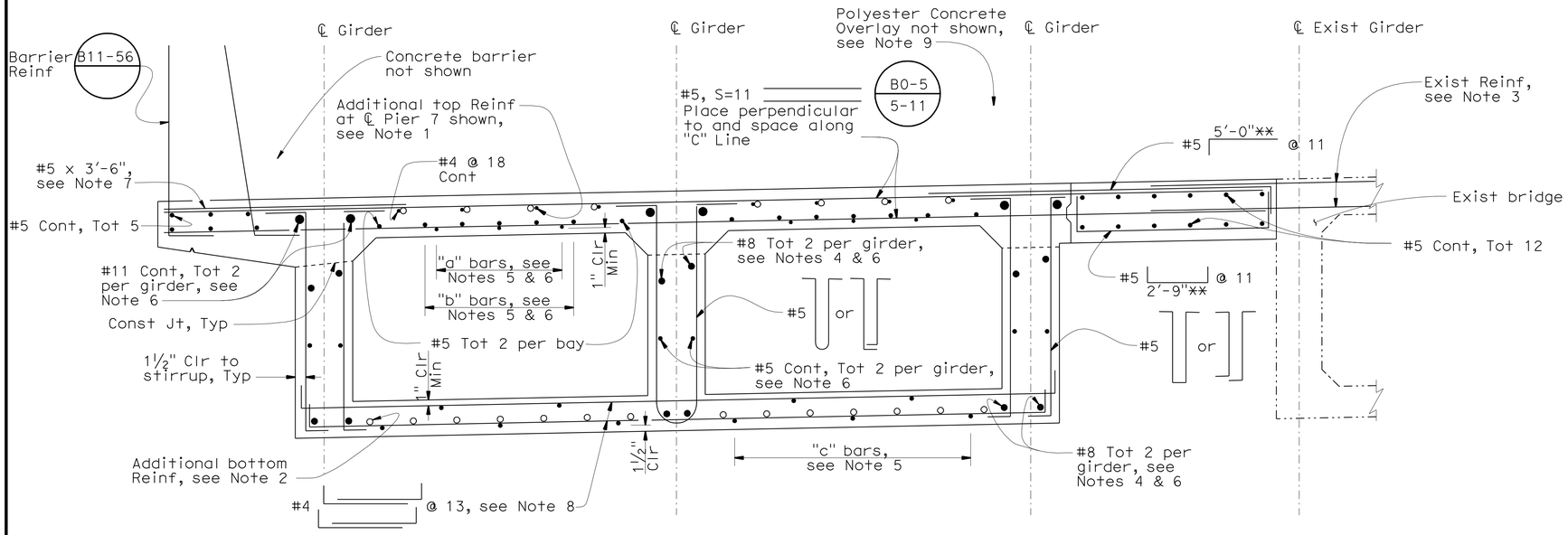

** Tie with deck Reinf

TYPICAL SECTION AT CENTERLINE SPAN 6 LEFT

1"=1'-0"

B0-5 B7-1

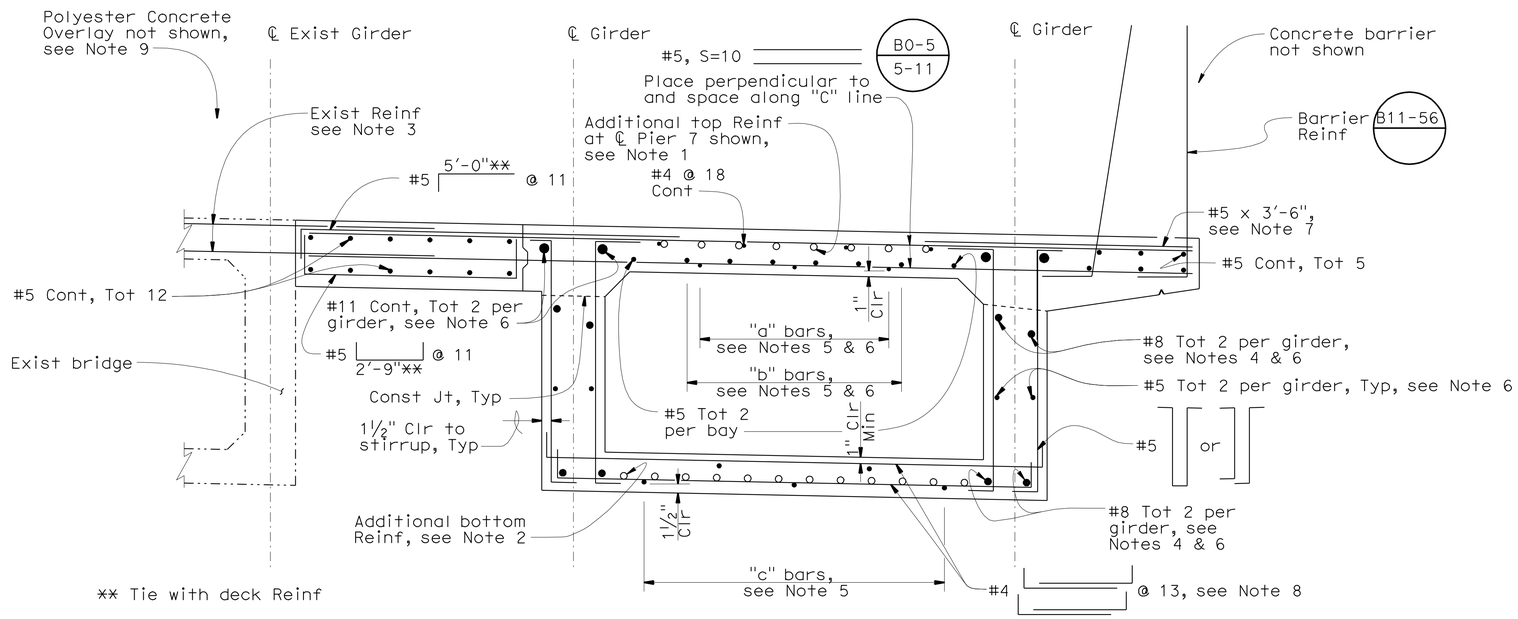

** Tie with deck Reinf

TYPICAL SECTION AT CENTERLINE SPAN 6 RIGHT

1"=1'-0"

B0-5 B7-1

Legend:

-·-·-·- Indicates existing bridge

Notes:

1. For additional top reinforcement see, "Girder Reinforcement No. 1", "Girder Reinforcement No. 2", "Girder Reinforcement No. 3", and "Girder Reinforcement No. 4" sheets.
2. For additional bottom reinforcement see, "Girder Reinforcement No. 5", "Girder Reinforcement No. 6", "Girder Reinforcement No. 7", and "Girder Reinforcement No. 8" sheets.
3. Existing transverse reinforcement in overhang removal portion to remain.
4. Place #8 continuous, total 2 per girder for span 1 through span 6 on Left Structure and Right Structure.
5. For "a", "b", and "c" bars, see Deck and Soffit Reinforcement Table on "Typical Section No. 5" sheet.
6. For reinforcement details at locations of girder transitions, see "Typical Section No. 6" sheet.
7. Bundle additional #5 bar onto every other top transverse bar in overhang for a distance of five feet on each side of an expansion joint in barrier and at ends of barrier.
8. Place #4 transverse soffit reinforcement from Abutment 1 to Pier 11 of both Left Structure and Right Structure.
9. Polyester Concrete Overlay not shown. Prepare Concrete Bridge Deck Surface and overlay full deck width (new and existing structures including approach slabs) with 3/4" minimum and varies Polyester Concrete. For limits, see "Constuction Sequence No. 3" sheet. 1
10. No "Lap" splices for #8 reinforcement or larger. "Service" splices only.

Note:
The Contractor shall verify all controlling field dimensions before ordering or fabricating any material.

1 **REVISED PER ADDENDUM No. 1 DATED APRIL 21, 2011**

DESIGN OVERSIGHT Eric D. Fredrickson
4-13-11
SIGN OFF DATE

	BY	CHECKED
DESIGN	M. Katt	V. Doctolero/ E. Dahl
DETAILS	J. Bland	M. Quest
QUANTITIES	M. Katt	M. O'Hagan

PREPARED FOR THE STATE OF CALIFORNIA DEPARTMENT OF TRANSPORTATION

Tim Osterkamp
PROJECT ENGINEER

BRIDGE NO. 12-0151
POST MILE 32.6

BIDWELL PARK VIADUCT (WIDEN)
TYPICAL SECTION No. 4

DESIGN DETAIL SHEET (ENGLISH) (REV. 06-01-09)

ORIGINAL SCALE IN INCHES FOR REDUCED PLANS 0 1 2 3

CU 03-199
EA 3A0421

DISREGARD PRINTS BEARING EARLIER REVISION DATES

REVISION DATES (PRELIMINARY STAGE ONLY) 9/13/08 8/27/09 11/18/09 1/20/10 2/2/10 2/11/10

SHEET 32 OF 75

FILE => 12-0151rl-k-ts04.add

USERNAME => trmikest DATE PLOTTED => 20-APR-2011 TIME PLOTTED => 14:10

DIST	COUNTY	ROUTE	POST MILES TOTAL PROJECT	SHEET No	TOTAL SHEETS
03	But	99	R32.4/R33.3	431	473

REGISTERED CIVIL ENGINEER 2/11/10 DATE

6-7-10
PLANS APPROVAL DATE

REGISTERED PROFESSIONAL ENGINEER Tim Osterkamp No. 46783 Exp. 06/30/11 CIVIL STATE OF CALIFORNIA

The State of California or its officers or agents shall not be responsible for the accuracy or completeness of scanned copies of this plan sheet.

QUINCY ENGINEERING, INC
3247 Ramos Circle
Sacramento, CA 95827 - 2501

BUTTE COUNTY ASSOCIATION OF GOVERNMENTS
2580 SIERRA SUNRISE TERRACE, SUITE 100
CHICO, CA 95928

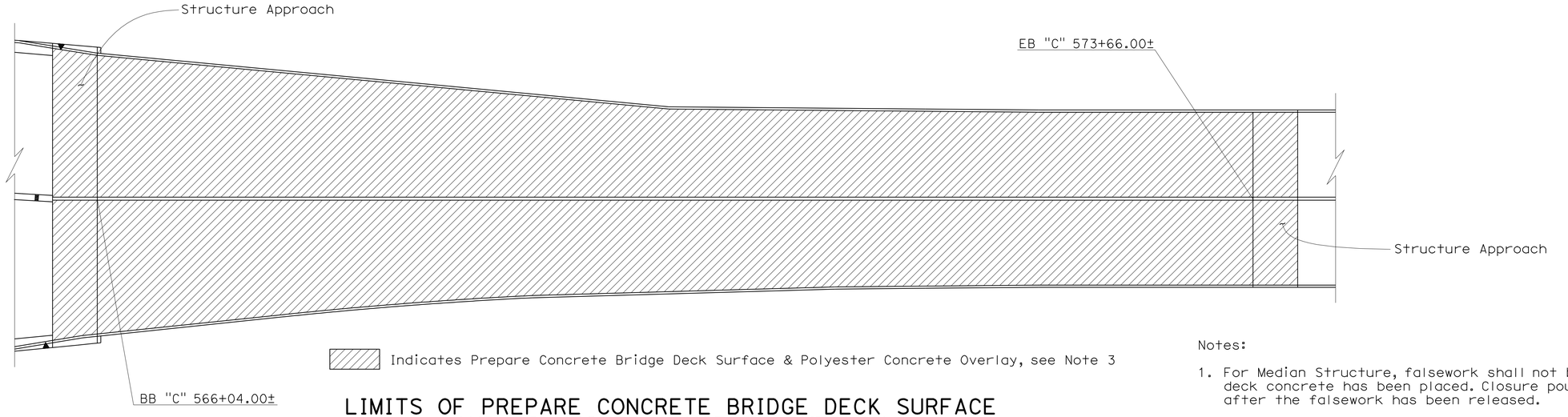

LIMITS OF PREPARE CONCRETE BRIDGE DECK SURFACE AND POLYESTER CONCRETE OVERLAY

No Scale

Notes:

1. For Median Structure, falsework shall not be released less than 28 days after the deck concrete has been placed. Closure pour shall not be placed sooner than 14 days after the falsework has been released.
2. For Left and Right Structures, falsework shall not be released less than 28 days after first deck pour has been placed. The second deck pour and closure pour shall not be placed sooner than 14 days after the falsework has been released.
3. (1) Prepare Concrete Bridge Deck Surface and place Polyester Concrete Overlay (3/4" mininum and varies thickness) on full width of structure, barrier to barrier, including approach slabs. Place Polyester Concrete Overlay after completing all bridge barriers.

(1) REVISED PER ADDENDUM No. 1 DATED APRIL 21, 2011

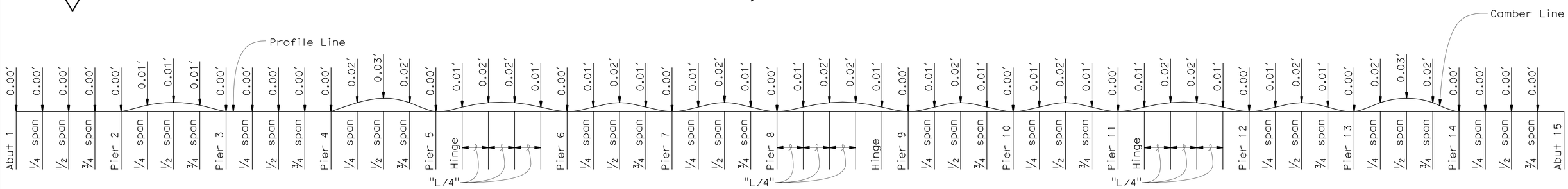

Note: "L" is the distance between ℄ hinge and ℄ of pier furthest from the hinge. Camber values do not include settlement. For falsework release, see Note 1

MEDIAN STRUCTURE CAMBER DIAGRAM

No Scale

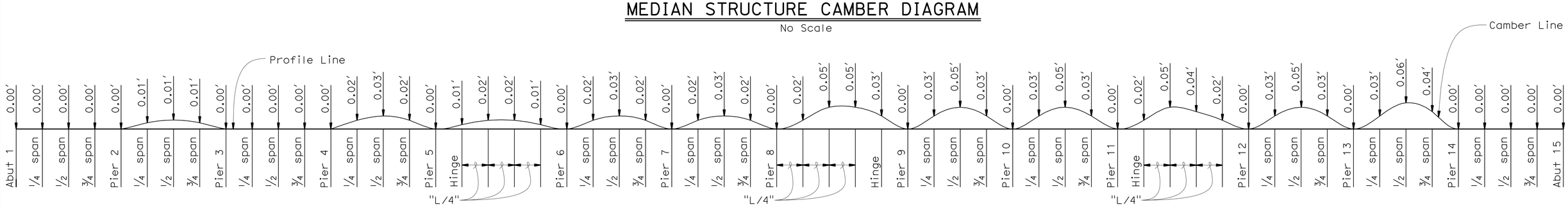

Note: "L" is the distance between ℄ hinge and ℄ of pier furthest from the hinge. Camber values do not include settlement. For falsework release, see Note 2

LEFT & RIGHT STRUCTURE CAMBER DIAGRAM

No Scale

DESIGN OVERSIGHT Eric D. Fredrickson
4-13-11
SIGN OFF DATE

	BY	CHECKED
DESIGN	M. Katt	V. Doctolero/ E. Dahl
DETAILS	J. Bland	M. Quest
QUANTITIES	M. Katt	M. O'Hagan

PREPARED FOR THE STATE OF CALIFORNIA DEPARTMENT OF TRANSPORTATION

Tim Osterkamp
PROJECT ENGINEER

BRIDGE NO. 12-0151
POST MILE 32.6

BIDWELL PARK VIADUCT (WIDEN)
CONSTRUCTION SEQUENCE NO. 3

DESIGN DETAIL SHEET (ENGLISH) (REV. 06-01-09)

ORIGINAL SCALE IN INCHES FOR REDUCED PLANS 0 1 2 3

CU 03-199
EA 3A0421

DISREGARD PRINTS BEARING EARLIER REVISION DATES

REVISION DATES (PRELIMINARY STAGE ONLY): 9/19/08 9/17/09 11/18/09 1/20/10 2/3/10 2/11/10

SHEET 62 OF 75

FILE => 12-0151rl-q-cs03.add

USERNAME => trmikest DATE PLOTTED => 20-APR-2011 TIME PLOTTED => 14:11