Dist	COUNTY	ROUTE	POST MILES TOTAL PROJECT	SHEET No.	TOTAL SHEETS
03	ED	50	32.3/39.3	1	67

NH-P050(123)E

STATE OF CALIFORNIA
DEPARTMENT OF TRANSPORTATION

PROJECT PLANS FOR CONSTRUCTION ON
STATE HIGHWAY
IN EL DORADO COUNTY
AT VARIOUS LOCATIONS
FROM 1.0 MILE EAST OF SLY PARK ROAD UNDERCROSSING TO 0.4 MILE WEST OF SOUTH FORK AMERICAN RIVER BRIDGE

TO BE SUPPLEMENTED BY STANDARD PLANS DATED MAY 2006

INDEX OF PLANS

SHEET No.	DESCRIPTION
1	TITLE AND LOCATION MAP
2	TYPICAL CROSS SECTIONS
3-47	DRAINAGE PLANS, PROFILES, DETAILS AND QUANTITIES
48	CONSTRUCTION AREA SIGNS
49	SUMMARY OF QUANTITIES
50-67	REVISED AND NEW STANDARD PLANS

THE STANDARD PLANS LIST APPLICABLE TO THIS CONTRACT IS INCLUDED IN THE NOTICE TO BIDDERS AND SPECIAL PROVISIONS BOOK.

LOCATION MAP

CULVERT LOCATIONS

LISTED BY PM

1 32.28	9 33.27	17 34.54	25 35.39	33 37.90
2 32.57	10 33.41	18 34.76	26 DELETED	34 38.05
3 32.74	11 33.51	19 34.77	27 36.33	35 38.23
4 32.93	12 33.65	20 34.87	28 36.93	36 38.45
5 33.00	13 33.70	21 34.90	29 37.13	37 38.50
6 33.01	14 33.81	22 35.07	30 37.20	38 38.82
7 33.08	15 34.30	23 DELETED	31 37.43	39 38.90
8 33.20	16 34.38	24 35.15	32 37.50	40 39.25

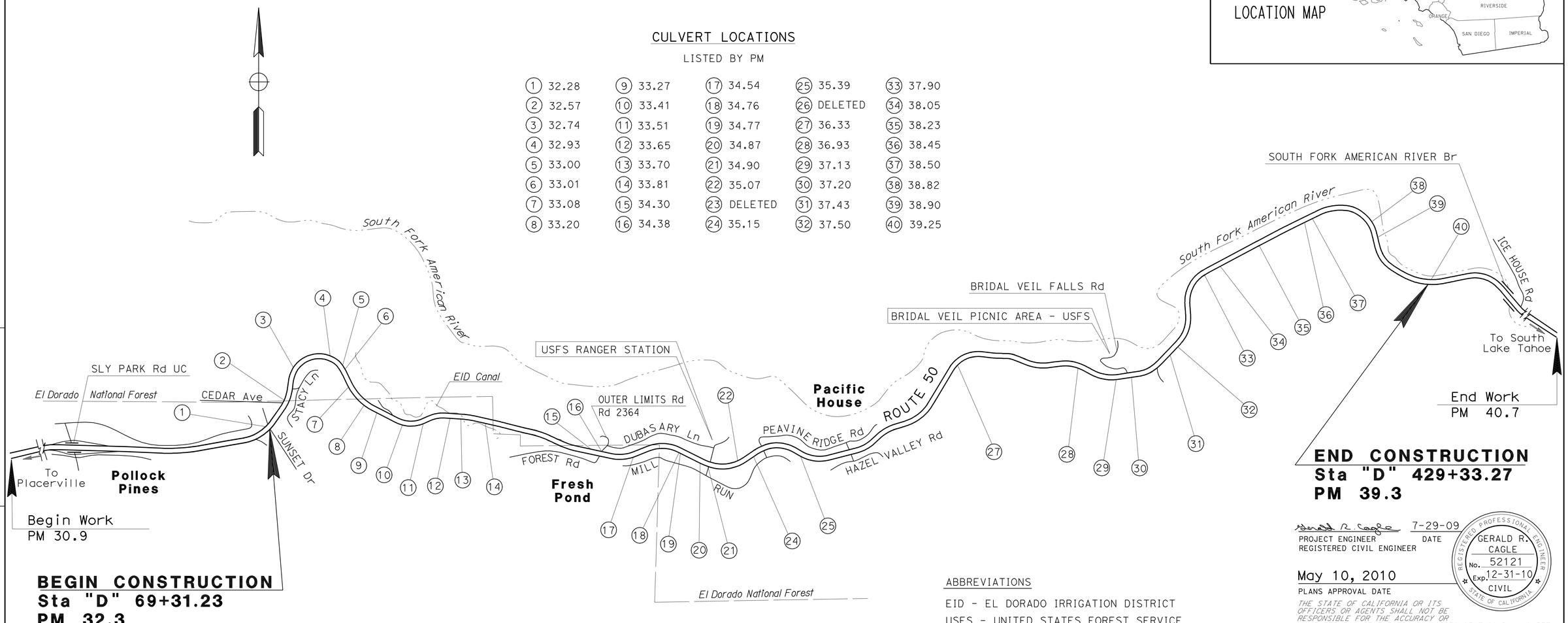

ABBREVIATIONS

EID - EL DORADO IRRIGATION DISTRICT
USFS - UNITED STATES FOREST SERVICE

NO SCALE

THE CONTRACTOR SHALL POSSESS THE CLASS (OR CLASSES) OF LICENSE AS SPECIFIED IN THE "NOTICE TO BIDDERS."

PROJECT MANAGER CLARK PERI
DESIGN ENGINEER JERRY CAGLE

PROJECT ENGINEER REGISTERED CIVIL ENGINEER — DATE 7-29-09

GERALD R. CAGLE No. 52121 Exp. 12-31-10 CIVIL — REGISTERED PROFESSIONAL ENGINEER — STATE OF CALIFORNIA

May 10, 2010
PLANS APPROVAL DATE

THE STATE OF CALIFORNIA OR ITS OFFICERS OR AGENTS SHALL NOT BE RESPONSIBLE FOR THE ACCURACY OR COMPLETENESS OF ELECTRONIC COPIES OF THIS PLAN SHEET.

DATE PLOTTED => 05-AUG-2010
TIME PLOTTED => 09:40

CONTRACT No.	03-3C7604
PROJECT ID	0300000461

LAST REVISION 00-00-00

Dist	COUNTY	ROUTE	POST MILES TOTAL PROJECT	SHEET No.	TOTAL SHEETS
03	ED	50	32.3/39.3	2	67

REGISTERED CIVIL ENGINEER 7-29-09 DATE

5-10-10
PLANS APPROVAL DATE

REGISTERED PROFESSIONAL ENGINEER GERALD R. CAGLE No. 52121 Exp. 12-31-10 CIVIL STATE OF CALIFORNIA

THE STATE OF CALIFORNIA OR ITS OFFICERS OR AGENTS SHALL NOT BE RESPONSIBLE FOR THE ACCURACY OR COMPLETENESS OF SCANNED COPIES OF THIS PLAN SHEET.

NOTE:
DIMENSIONS OF THE PAVEMENT STRUCTURES (STRUCTURAL SECTIONS) ARE SUBJECT TO TOLERANCES SPECIFIED IN THE STANDARD SPECIFICATIONS.
SUPERELEVATION AS SHOWN OR AS DIRECTED BY THE ENGINEER.

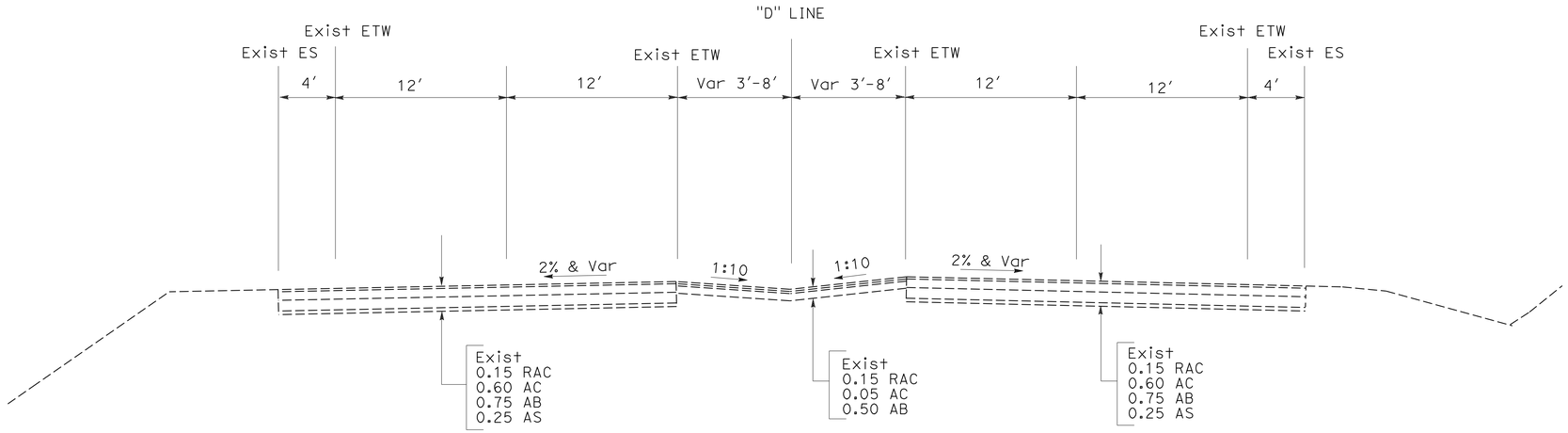

"D" 163+15 TO 430+00

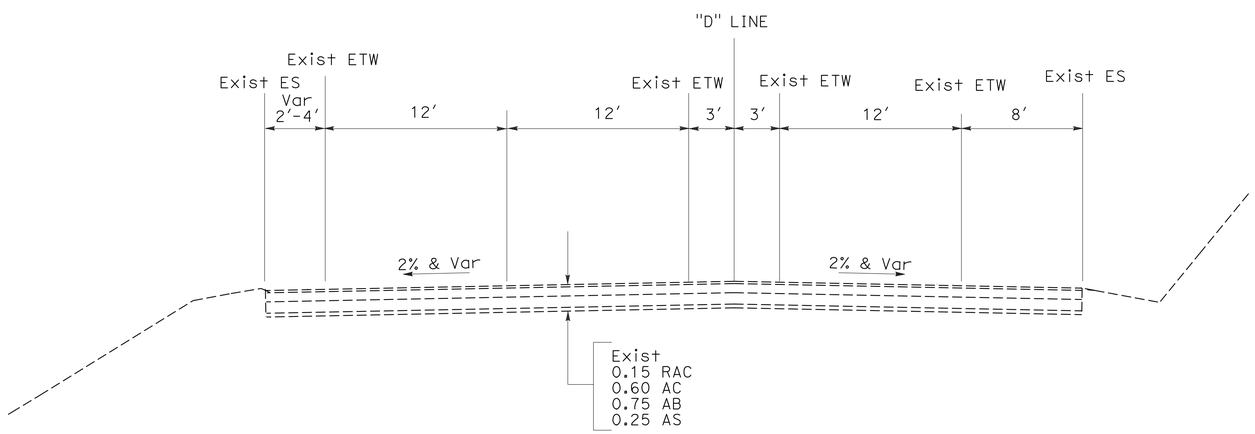

"D" 69+00 TO 163+15

TYPICAL CROSS SECTIONS

NO SCALE

X-1

STATE OF CALIFORNIA - DEPARTMENT OF TRANSPORTATION
NORTH REGION
OFFICE OF DESIGN WEST
DESIGN BRANCH S5

FUNCTIONAL SUPERVISOR: GILBERT OGAZ
CALCULATED-DESIGNED BY: JERRY CAGLE
CHECKED BY: MYHOA TON
REVISED BY
DATE REVISED

LAST REVISION 00-00-00
DATE PLOTTED => 10-MAY-2010
TIME PLOTTED => 10:27

NOTE: FOR COMPLETE RIGHT OF WAY AND ACCURATE ACCESS DATA, SEE RIGHT OF WAY RECORD MAPS AT DISTRICT OFFICE.

Dist	COUNTY	ROUTE	POST MILES TOTAL PROJECT	SHEET No.	TOTAL SHEETS
03	ED	50	32.3/39.3	3	67

REGISTERED CIVIL ENGINEER 7-29-09 DATE

5-10-10
PLANS APPROVAL DATE

REGISTERED PROFESSIONAL ENGINEER GERALD R. CAGLE No. 52121 Exp. 12-31-10 CIVIL STATE OF CALIFORNIA

THE STATE OF CALIFORNIA OR ITS OFFICERS OR AGENTS SHALL NOT BE RESPONSIBLE FOR THE ACCURACY OR COMPLETENESS OF SCANNED COPIES OF THIS PLAN SHEET.

LEGEND:

- No. — DRAINAGE SYSTEM NUMBER
- X — DRAINAGE UNIT
- RSP (SEE DRAINAGE PROFILES AND DETAILS SHEETS FOR LIMITS)
- ESA
- TEMPORARY FENCE (TYPE ESA)
- BREAK LINE

ABBREVIATIONS:

CIPP - CURED-IN-PLACE PIPELINER
APL - ALTERNATIVE PIPELINER
TCE - TEMPORARY CONSTRUCTION EASEMENT
RAC - RUBBERIZED ASPHALT CONCRETE

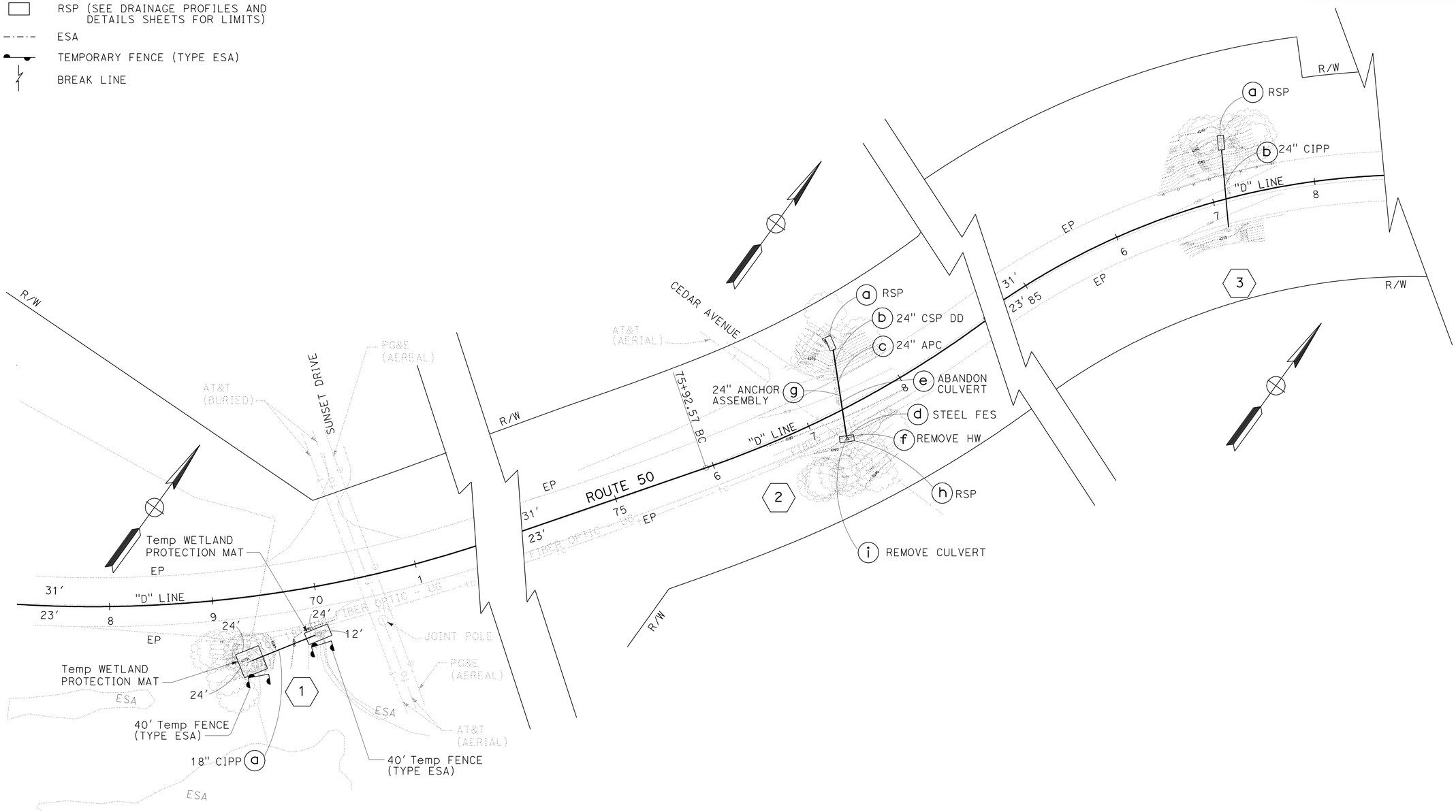

DRAINAGE PLAN

SCALE: 1" = 50'

D-1

THIS PLAN ACCURATE FOR DRAINAGE WORK ONLY.

STATE OF CALIFORNIA - DEPARTMENT OF TRANSPORTATION
NORTH REGION
OFFICE OF DESIGN SOUTH
DESIGN BRANCH S2

FUNCTIONAL SUPERVISOR: GILBERT OGAZ
CALCULATED-DESIGNED BY: JERRY CAGLE
CHECKED BY: MYHOA TON
REVISED BY
DATE REVISED

LAST REVISION 00-00-00
DATE PLOTTED => 10-MAY-2010
TIME PLOTTED => 10:27

NOTE: FOR COMPLETE RIGHT OF WAY AND ACCURATE ACCESS DATA,
SEE RIGHT OF WAY RECORD MAPS AT DISTRICT OFFICE.

Dist	COUNTY	ROUTE	POST MILES TOTAL PROJECT	SHEET No.	TOTAL SHEETS
03	ED	50	32.3/39.3	4	67

REGISTERED CIVIL ENGINEER 7-29-09 DATE

5-10-10
PLANS APPROVAL DATE

REGISTERED PROFESSIONAL ENGINEER
GERALD R. CAGLE
No. 52121
Exp. 12-31-10
CIVIL
STATE OF CALIFORNIA

THE STATE OF CALIFORNIA OR ITS OFFICERS OR AGENTS SHALL NOT BE RESPONSIBLE FOR THE ACCURACY OR COMPLETENESS OF SCANNED COPIES OF THIS PLAN SHEET.

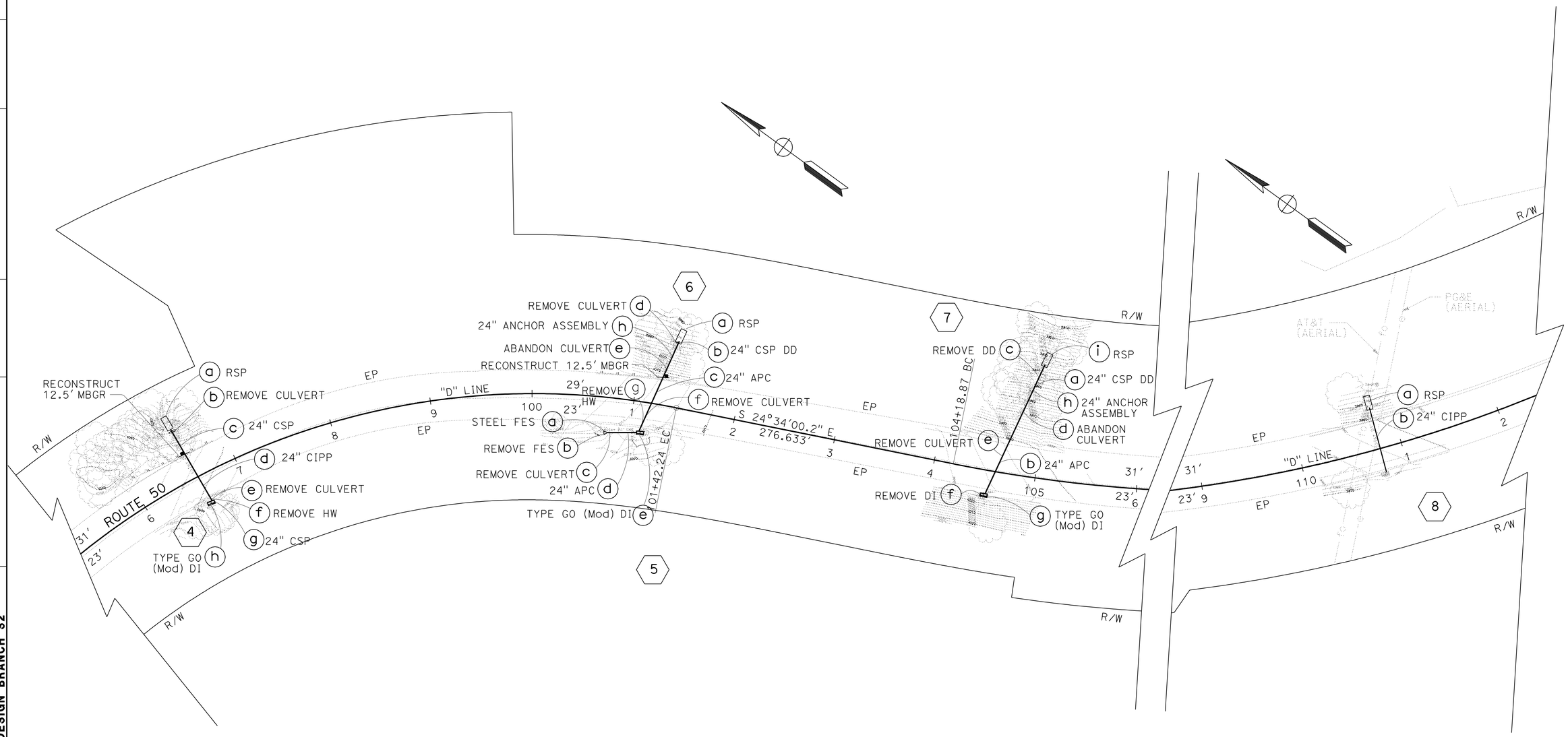

DRAINAGE PLAN

SCALE: 1" = 50'

D-2

THIS PLAN ACCURATE FOR DRAINAGE WORK ONLY.

STATE OF CALIFORNIA - DEPARTMENT OF TRANSPORTATION
NORTH REGION
OFFICE OF DESIGN SOUTH
DESIGN BRANCH S2

FUNCTIONAL SUPERVISOR: GILBERT OGAZ

CALCULATED-DESIGNED BY: JERRY CAGLE
CHECKED BY: MYHOA TON

REVISED BY
DATE REVISED

LAST REVISION 00-00-00
DATE PLOTTED => 10-MAY-2010
TIME PLOTTED => 10:27

NOTE: FOR COMPLETE RIGHT OF WAY AND ACCURATE ACCESS DATA, SEE RIGHT OF WAY RECORD MAPS AT DISTRICT OFFICE.

Dist	COUNTY	ROUTE	POST MILES TOTAL PROJECT	SHEET No.	TOTAL SHEETS
03	ED	50	32.3/39.3	5	67

REGISTERED CIVIL ENGINEER 7-29-09 DATE

5-10-10
PLANS APPROVAL DATE

REGISTERED PROFESSIONAL ENGINEER GERALD R. CAGLE No. 52121 Exp. 12-31-10 CIVIL STATE OF CALIFORNIA

THE STATE OF CALIFORNIA OR ITS OFFICERS OR AGENTS SHALL NOT BE RESPONSIBLE FOR THE ACCURACY OR COMPLETENESS OF SCANNED COPIES OF THIS PLAN SHEET.

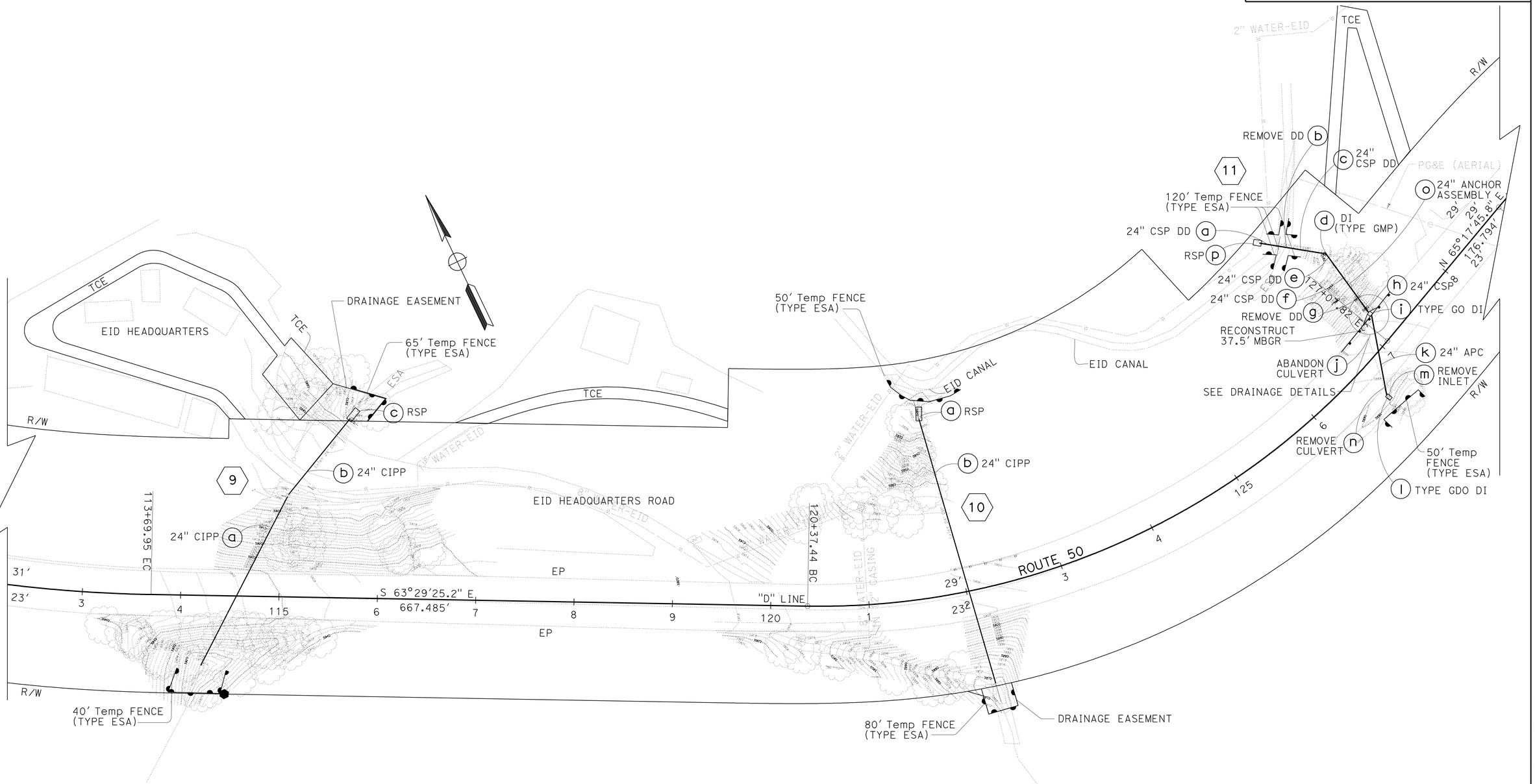

DRAINAGE PLAN

SCALE: 1" = 50'

D-3

THIS PLAN ACCURATE FOR DRAINAGE WORK ONLY.

STATE OF CALIFORNIA - DEPARTMENT OF TRANSPORTATION
NORTH REGION
OFFICE OF DESIGN SOUTH
DESIGN BRANCH S2

FUNCTIONAL SUPERVISOR: GILBERT OGAZ
JERRY CAGLE
MYHOA TON
CALCULATED-DESIGNED BY
CHECKED BY
REVISED BY
DATE REVISED

LAST REVISION 00-00-00
DATE PLOTTED => 10-MAY-2010
TIME PLOTTED => 11:19

NOTE: FOR COMPLETE RIGHT OF WAY AND ACCURATE ACCESS DATA, SEE RIGHT OF WAY RECORD MAPS AT DISTRICT OFFICE.

Dist	COUNTY	ROUTE	POST MILES TOTAL PROJECT	SHEET No.	TOTAL SHEETS
03	ED	50	32.3/39.3	6	67

REGISTERED CIVIL ENGINEER 7-29-09 DATE

5-10-10
PLANS APPROVAL DATE

REGISTERED PROFESSIONAL ENGINEER GERALD R. CAGLE No. 52121 Exp. 12-31-10 CIVIL STATE OF CALIFORNIA

THE STATE OF CALIFORNIA OR ITS OFFICERS OR AGENTS SHALL NOT BE RESPONSIBLE FOR THE ACCURACY OR COMPLETENESS OF SCANNED COPIES OF THIS PLAN SHEET.

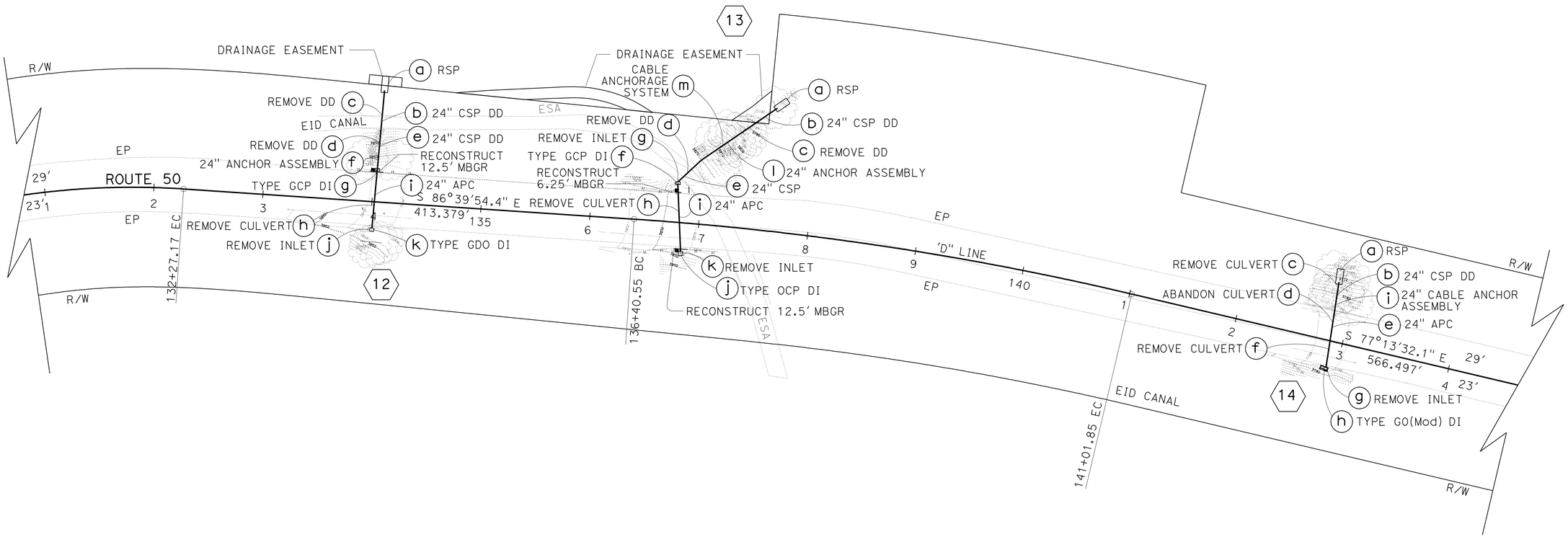

THIS PLAN ACCURATE FOR DRAINAGE WORK ONLY.

DRAINAGE PLAN

SCALE: 1" = 50'

D-4

STATE OF CALIFORNIA - DEPARTMENT OF TRANSPORTATION
NORTH REGION
OFFICE OF DESIGN SOUTH
DESIGN BRANCH S2

FUNCTIONAL SUPERVISOR: GILBERT OGAZ
CALCULATED-DESIGNED BY: JERRY CAGLE
CHECKED BY: MYHOA TON
REVISED BY
DATE REVISED

LAST REVISION 00-00-00
DATE PLOTTED => 10-MAY-2010
TIME PLOTTED => 10:27

BORDER LAST REVISED 4/11/2008
RELATIVE BORDER SCALE IS IN INCHES 0 1 2 3
USERNAME => trstrk
DGN FILE => 33c760ia004.dgn
CU 03252
EA 3C7601

NOTE: FOR COMPLETE RIGHT OF WAY AND ACCURATE ACCESS DATA, SEE RIGHT OF WAY RECORD MAPS AT DISTRICT OFFICE.

Dist	COUNTY	ROUTE	POST MILES TOTAL PROJECT	SHEET No.	TOTAL SHEETS
03	ED	50	32.3/39.3	7	67

REGISTERED CIVIL ENGINEER 7-29-09 DATE

5-10-10
PLANS APPROVAL DATE

REGISTERED PROFESSIONAL ENGINEER GERALD R. CAGLE No. 52121 Exp. 12-31-10 CIVIL STATE OF CALIFORNIA

THE STATE OF CALIFORNIA OR ITS OFFICERS OR AGENTS SHALL NOT BE RESPONSIBLE FOR THE ACCURACY OR COMPLETENESS OF SCANNED COPIES OF THIS PLAN SHEET.

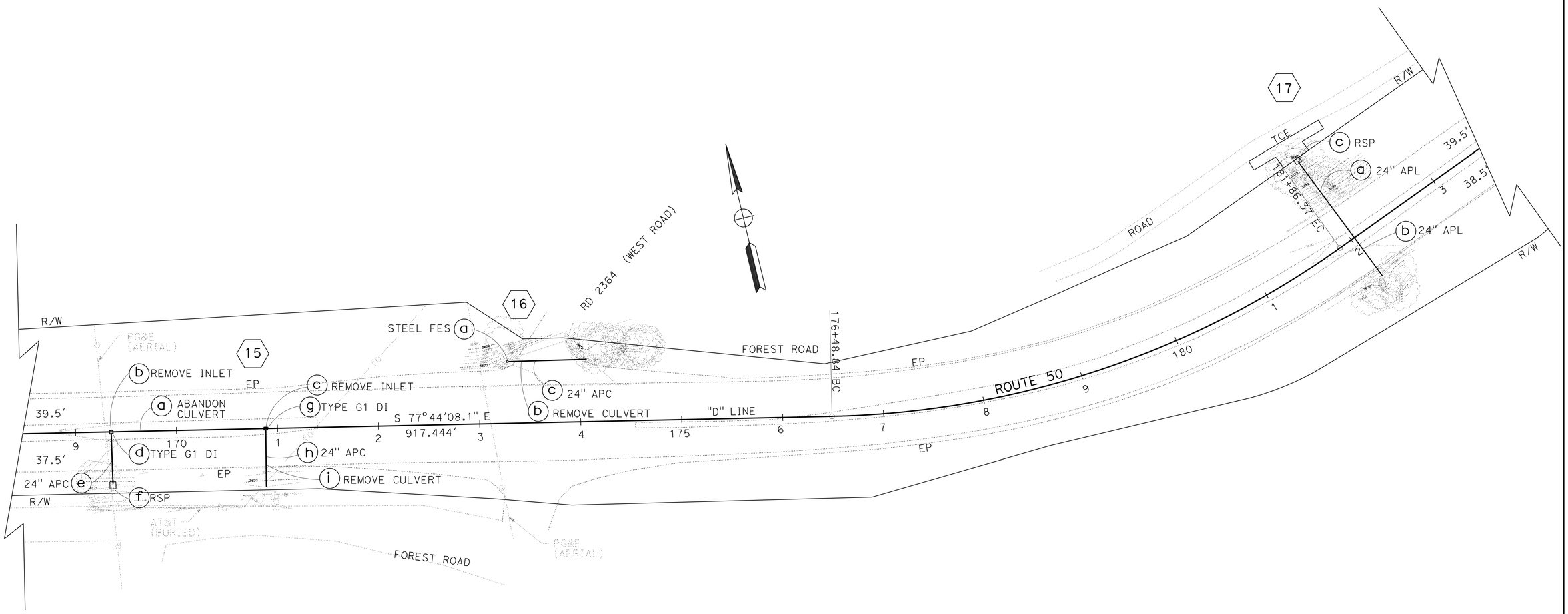

THIS PLAN ACCURATE FOR DRAINAGE WORK ONLY.

DRAINAGE PLAN

SCALE: 1" = 50'

D-5

STATE OF CALIFORNIA - DEPARTMENT OF TRANSPORTATION
NORTH REGION
OFFICE OF DESIGN SOUTH
DESIGN BRANCH S2

FUNCTIONAL SUPERVISOR: GILBERT OGAZ
CALCULATED-DESIGNED BY: JERRY CAGLE
CHECKED BY: MYHOA TON
REVISED BY
DATE REVISED

LAST REVISION 00-00-00
DATE PLOTTED => 10-MAY-2010
TIME PLOTTED => 10:27

NOTE: FOR COMPLETE RIGHT OF WAY AND ACCURATE ACCESS DATA,
SEE RIGHT OF WAY RECORD MAPS AT DISTRICT OFFICE.

Dist	COUNTY	ROUTE	POST MILES TOTAL PROJECT	SHEET No.	TOTAL SHEETS
03	ED	50	32.3/39.3	8	67

REGISTERED CIVIL ENGINEER 7-29-09 DATE

5-10-10
PLANS APPROVAL DATE

REGISTERED PROFESSIONAL ENGINEER GERALD R. CAGLE No. 52121 Exp. 12-31-10 CIVIL STATE OF CALIFORNIA

THE STATE OF CALIFORNIA OR ITS OFFICERS OR AGENTS SHALL NOT BE RESPONSIBLE FOR THE ACCURACY OR COMPLETENESS OF SCANNED COPIES OF THIS PLAN SHEET.

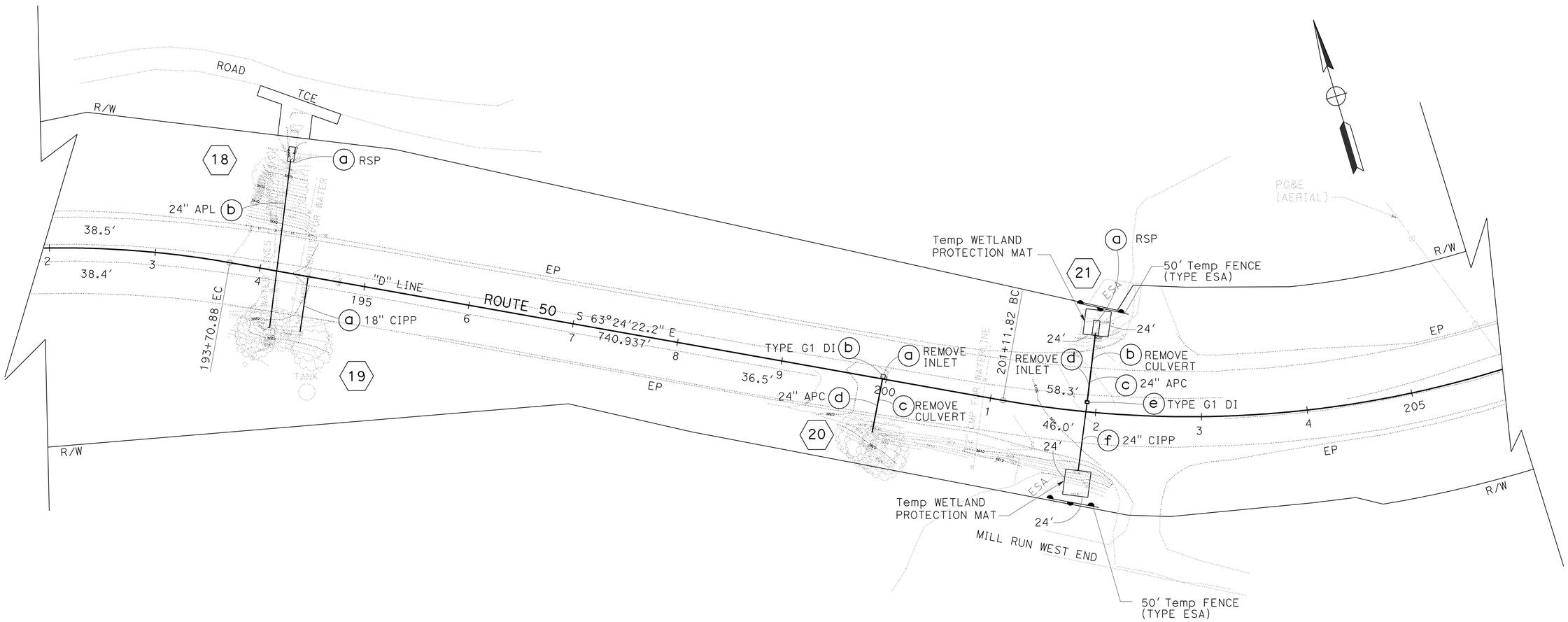

DRAINAGE PLAN

SCALE: 1" = 50′

THIS PLAN ACCURATE FOR DRAINAGE WORK ONLY.

D-6

STATE OF CALIFORNIA - DEPARTMENT OF TRANSPORTATION
Caltrans
NORTH REGION
OFFICE OF DESIGN SOUTH
DESIGN BRANCH S2

FUNCTIONAL SUPERVISOR: GILBERT OGAZ
CALCULATED-DESIGNED BY: JERRY CAGLE
CHECKED BY: MYHOA TON
REVISED BY
DATE REVISED

LAST REVISION DATE PLOTTED => 10-MAY-2010
00-00-00 TIME PLOTTED => 10:27

NOTE: FOR COMPLETE RIGHT OF WAY AND ACCURATE ACCESS DATA, SEE RIGHT OF WAY RECORD MAPS AT DISTRICT OFFICE.

Dist	COUNTY	ROUTE	POST MILES TOTAL PROJECT	SHEET No.	TOTAL SHEETS
03	ED	50	32.3/39.3	9	67

REGISTERED CIVIL ENGINEER 7-29-09 DATE

5-10-10
PLANS APPROVAL DATE

REGISTERED PROFESSIONAL ENGINEER GERALD R. CAGLE No. 52121 Exp. 12-31-10 CIVIL STATE OF CALIFORNIA

THE STATE OF CALIFORNIA OR ITS OFFICERS OR AGENTS SHALL NOT BE RESPONSIBLE FOR THE ACCURACY OR COMPLETENESS OF SCANNED COPIES OF THIS PLAN SHEET.

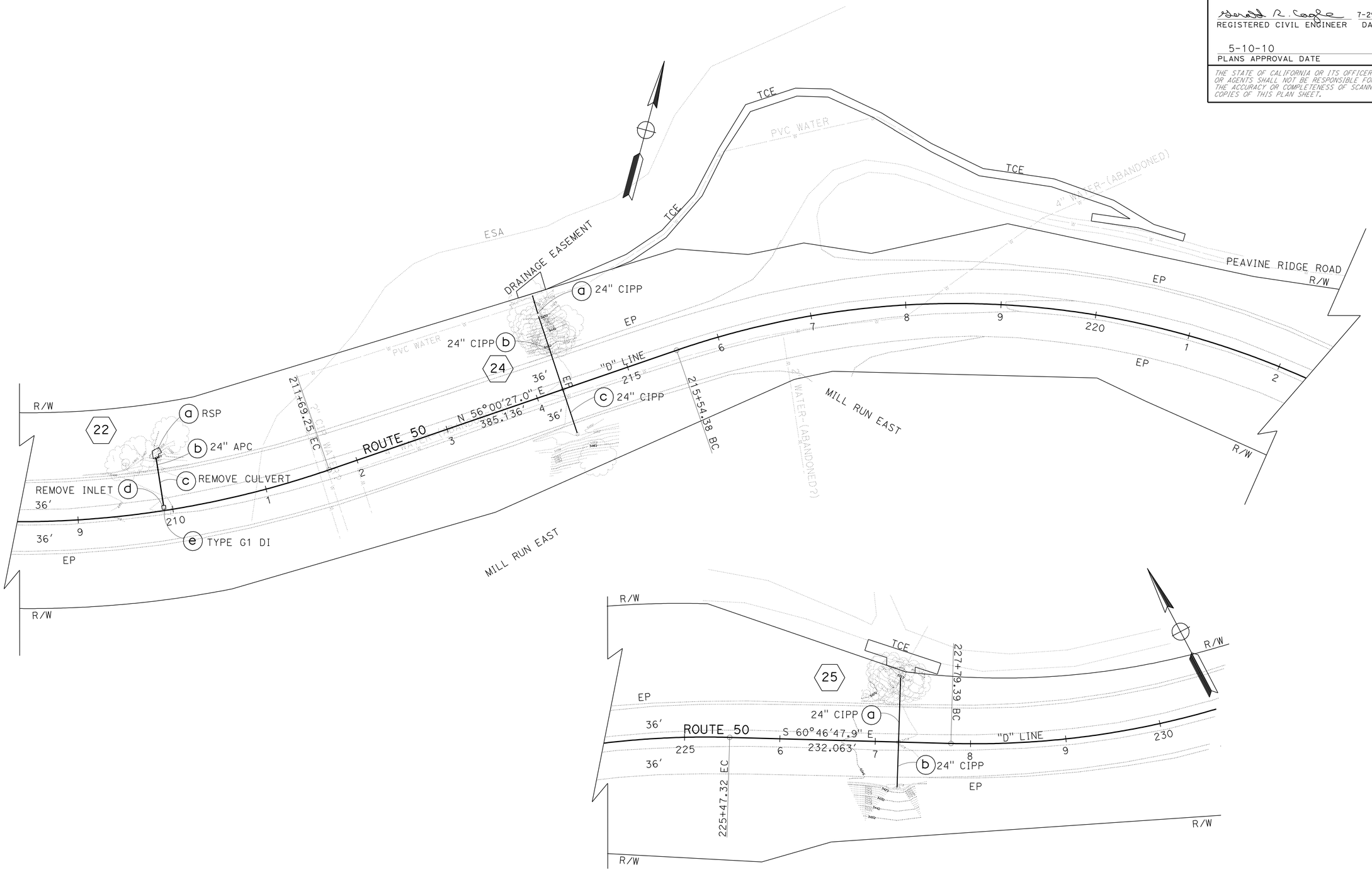

DRAINAGE PLAN

SCALE: 1" = 50'

D-7

THIS PLAN ACCURATE FOR DRAINAGE WORK ONLY.

STATE OF CALIFORNIA - DEPARTMENT OF TRANSPORTATION
NORTH REGION
OFFICE OF DESIGN SOUTH
DESIGN BRANCH S2

FUNCTIONAL SUPERVISOR: GILBERT OGAZ

CALCULATED-DESIGNED BY: JERRY CAGLE
CHECKED BY: MYHOA TON

REVISED BY
DATE REVISED

LAST REVISION 00-00-00
DATE PLOTTED => 10-MAY-2010
TIME PLOTTED => 10:27

NOTE: FOR COMPLETE RIGHT OF WAY AND ACCURATE ACCESS DATA, SEE RIGHT OF WAY RECORD MAPS AT DISTRICT OFFICE.

Dist	COUNTY	ROUTE	POST MILES TOTAL PROJECT	SHEET No.	TOTAL SHEETS
03	ED	50	32.3/39.3	10	67

REGISTERED CIVIL ENGINEER 7-29-09 DATE

5-10-10
PLANS APPROVAL DATE

REGISTERED PROFESSIONAL ENGINEER GERALD R. CAGLE No. 52121 Exp. 12-31-10 CIVIL STATE OF CALIFORNIA

THE STATE OF CALIFORNIA OR ITS OFFICERS OR AGENTS SHALL NOT BE RESPONSIBLE FOR THE ACCURACY OR COMPLETENESS OF SCANNED COPIES OF THIS PLAN SHEET.

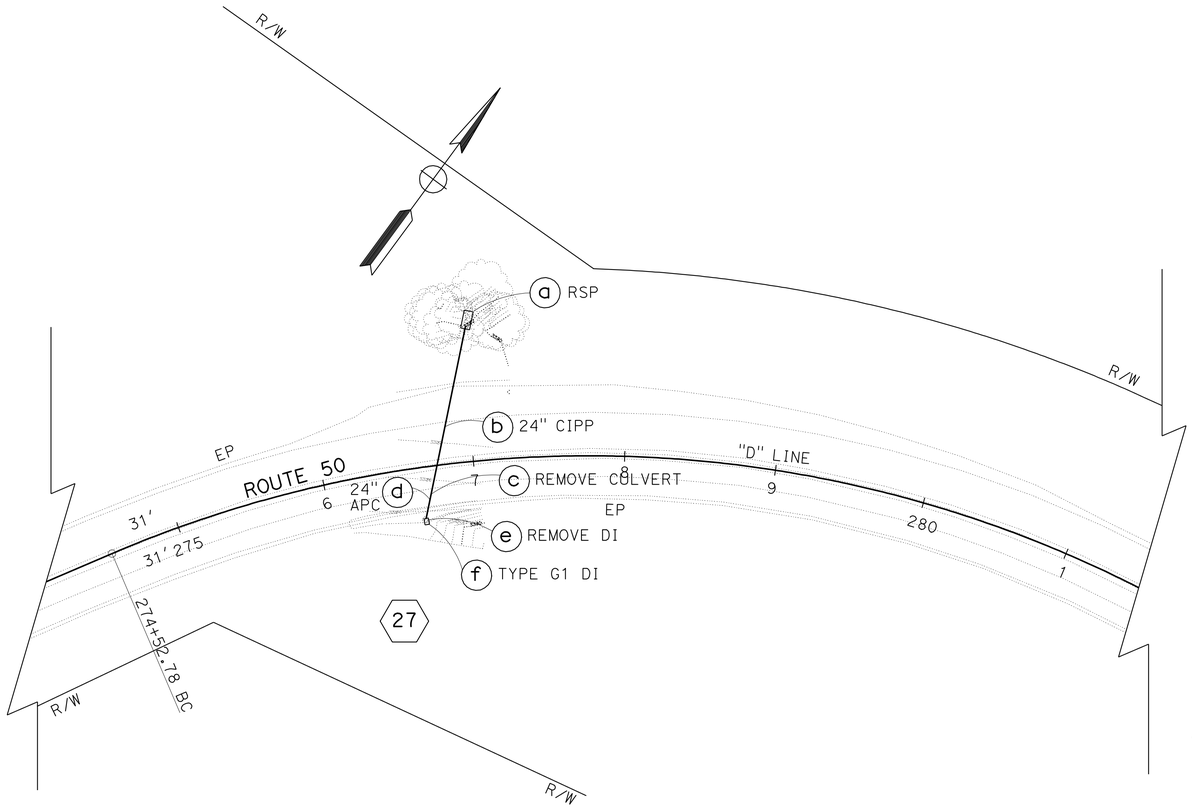

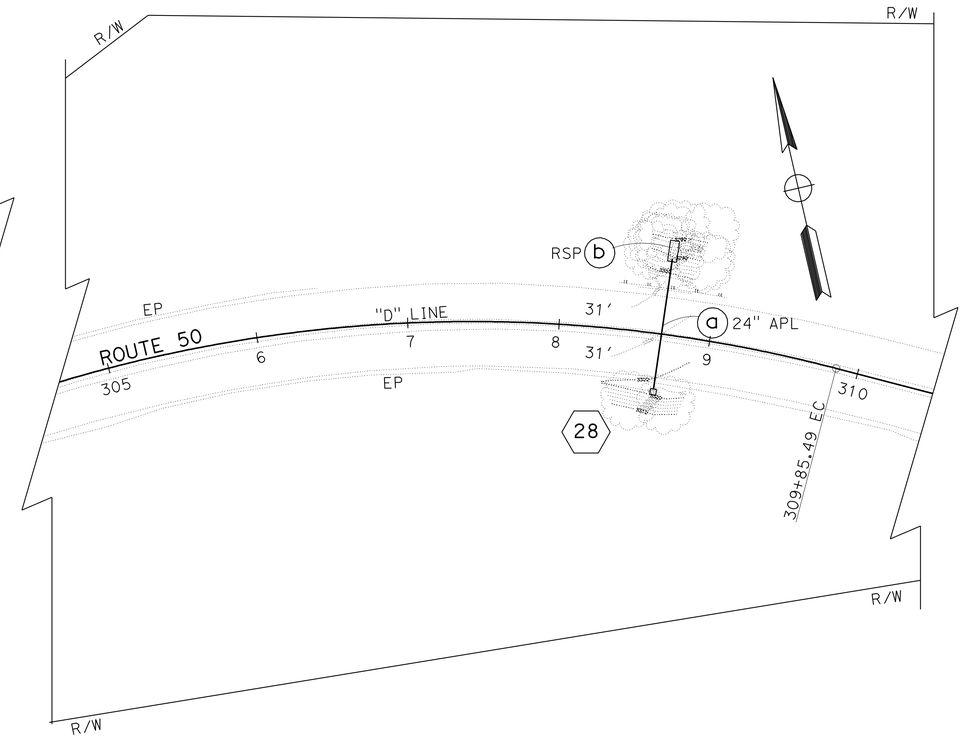

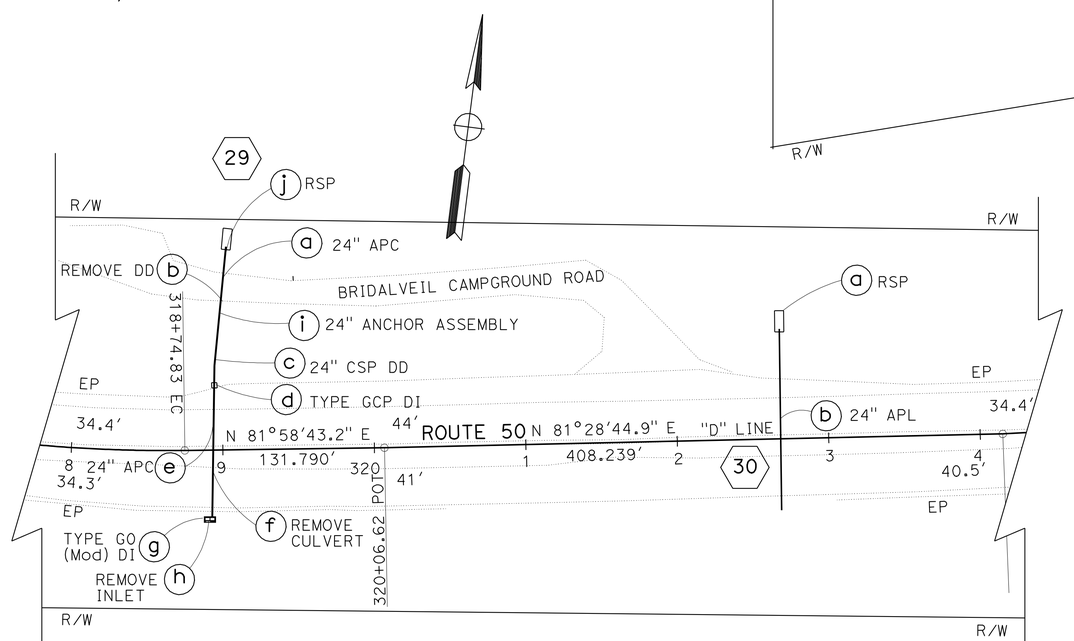

DRAINAGE PLAN

SCALE: 1" = 50'

THIS PLAN ACCURATE FOR DRAINAGE WORK ONLY.

D-8

STATE OF CALIFORNIA - DEPARTMENT OF TRANSPORTATION
NORTH REGION
OFFICE OF DESIGN SOUTH
DESIGN BRANCH S2

FUNCTIONAL SUPERVISOR: GILBERT OGAZ
CALCULATED-DESIGNED BY: JERRY CAGLE
CHECKED BY: MYHOA TON
REVISED BY
DATE REVISED

LAST REVISION 00-00-00
DATE PLOTTED => 10-MAY-2010
TIME PLOTTED => 10:28

NOTE: FOR COMPLETE RIGHT OF WAY AND ACCURATE ACCESS DATA, SEE RIGHT OF WAY RECORD MAPS AT DISTRICT OFFICE.

Dist	COUNTY	ROUTE	POST MILES TOTAL PROJECT	SHEET No.	TOTAL SHEETS
03	ED	50	32.3/39.3	11	67

REGISTERED CIVIL ENGINEER 7-29-09 DATE

5-10-10
PLANS APPROVAL DATE

REGISTERED PROFESSIONAL ENGINEER GERALD R. CAGLE No. 52121 Exp. 12-31-10 CIVIL STATE OF CALIFORNIA

THE STATE OF CALIFORNIA OR ITS OFFICERS OR AGENTS SHALL NOT BE RESPONSIBLE FOR THE ACCURACY OR COMPLETENESS OF SCANNED COPIES OF THIS PLAN SHEET.

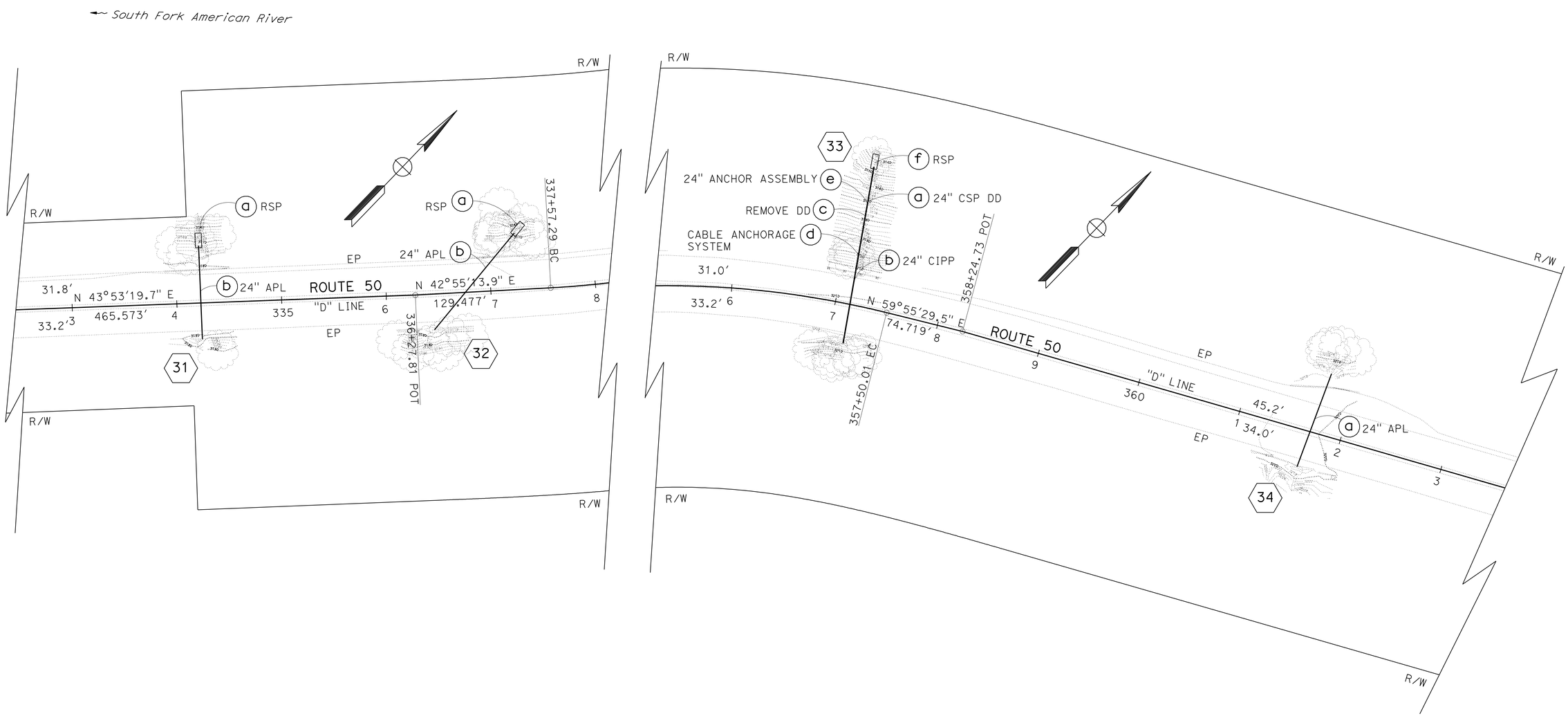

DRAINAGE PLAN

SCALE: 1" = 50′

THIS PLAN ACCURATE FOR DRAINAGE WORK ONLY.

D-9

STATE OF CALIFORNIA - DEPARTMENT OF TRANSPORTATION
NORTH REGION
OFFICE OF DESIGN SOUTH
DESIGN BRANCH S2

FUNCTIONAL SUPERVISOR: GILBERT OGAZ
CALCULATED-DESIGNED BY: JERRY CAGLE
CHECKED BY: MYHOA TON
REVISED BY
DATE REVISED

LAST REVISION 00-00-00
DATE PLOTTED => 10-MAY-2010
TIME PLOTTED => 10:51

BORDER LAST REVISED 4/11/2008
RELATIVE BORDER SCALE IS IN INCHES 0 1 2 3
USERNAME => trmnguye
DGN FILE => 33c760ia009.dgn
CU 03252
EA 3C7601

NOTE: FOR COMPLETE RIGHT OF WAY AND ACCURATE ACCESS DATA, SEE RIGHT OF WAY RECORD MAPS AT DISTRICT OFFICE.

Dist	COUNTY	ROUTE	POST MILES TOTAL PROJECT	SHEET No.	TOTAL SHEETS
03	ED	50	32.3/39.3	12	67

REGISTERED CIVIL ENGINEER — DATE: 7-29-09

5-10-10
PLANS APPROVAL DATE

REGISTERED PROFESSIONAL ENGINEER — GERALD R. CAGLE — No. 52121 — Exp. 12-31-10 — CIVIL — STATE OF CALIFORNIA

THE STATE OF CALIFORNIA OR ITS OFFICERS OR AGENTS SHALL NOT BE RESPONSIBLE FOR THE ACCURACY OR COMPLETENESS OF SCANNED COPIES OF THIS PLAN SHEET.

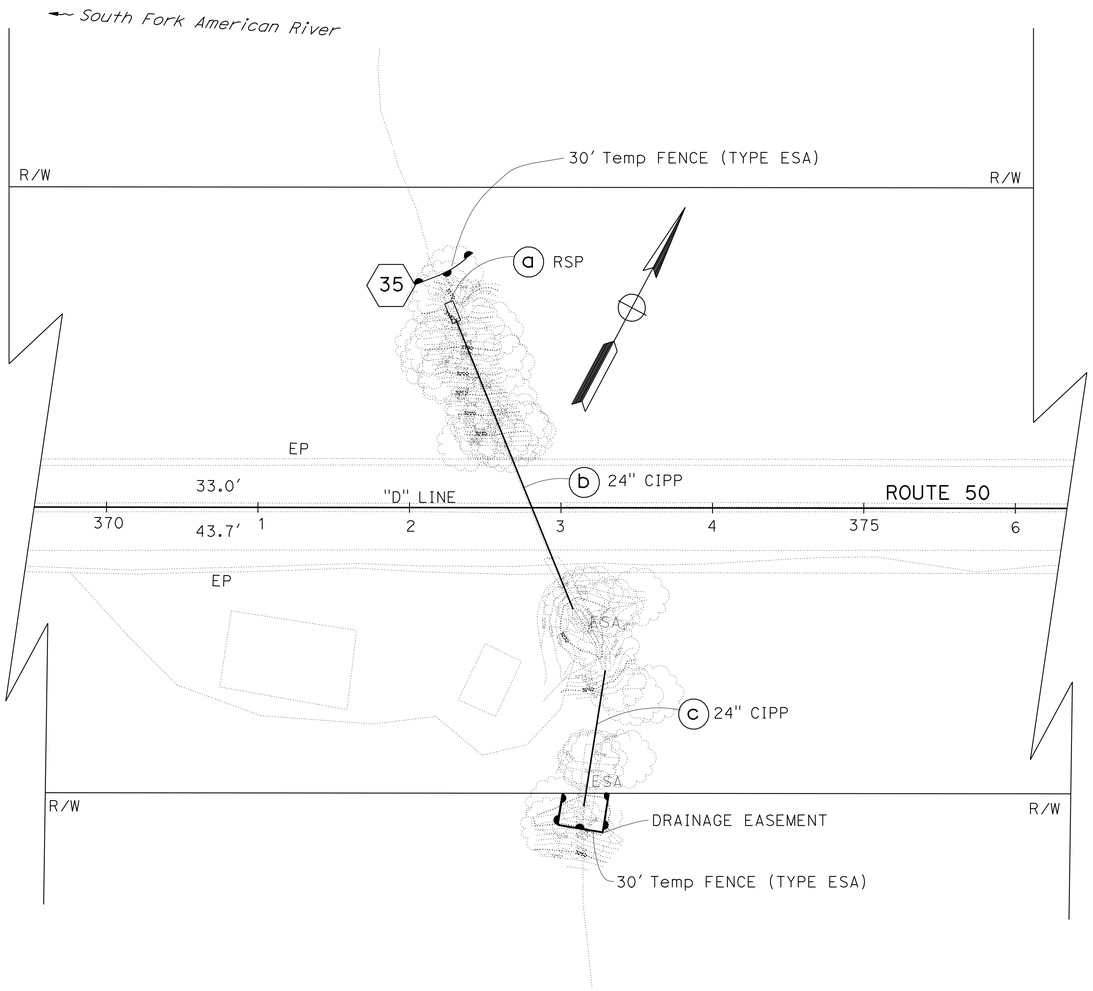

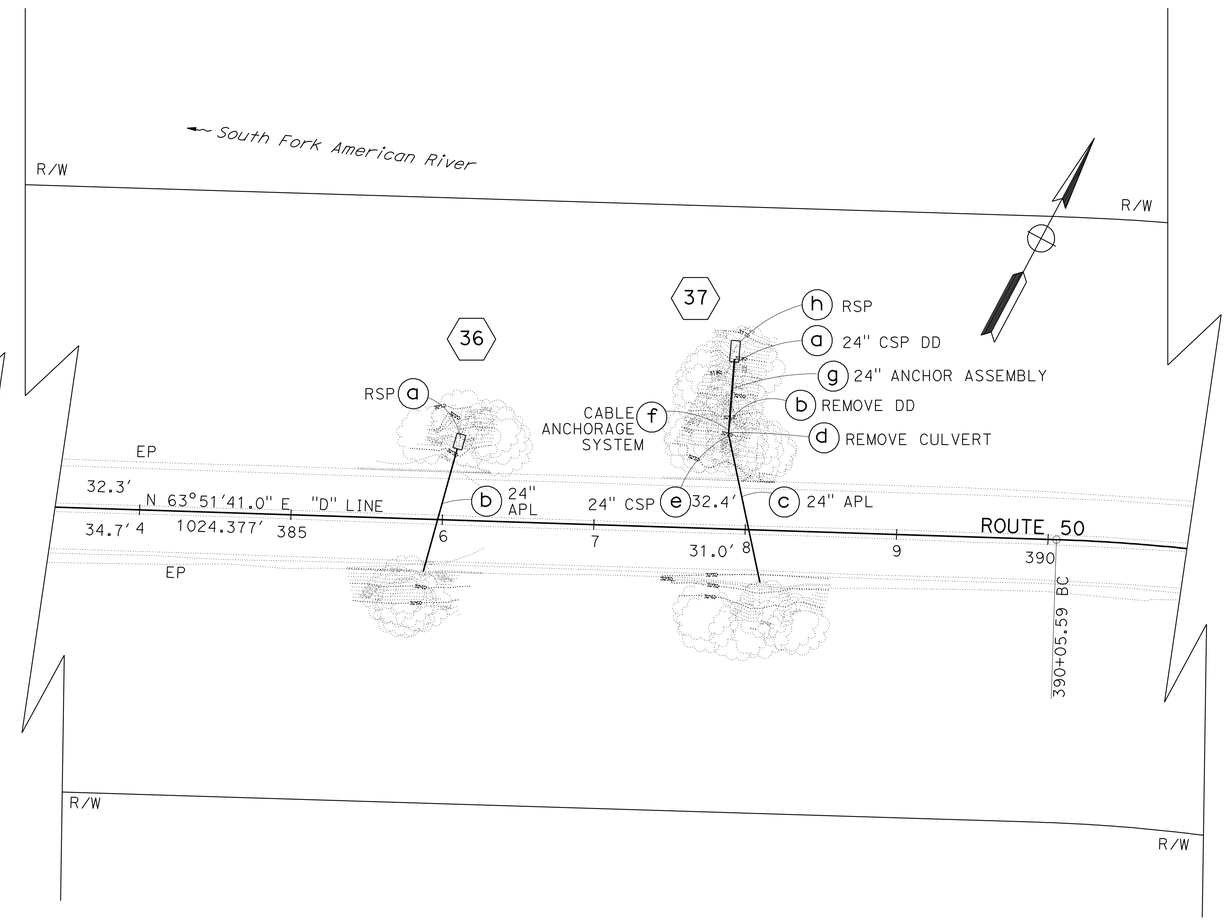

DRAINAGE PLAN

SCALE: 1" = 50'

D-10

THIS PLAN ACCURATE FOR DRAINAGE WORK ONLY.

STATE OF CALIFORNIA - DEPARTMENT OF TRANSPORTATION
NORTH REGION
OFFICE OF DESIGN SOUTH
DESIGN BRANCH S2

FUNCTIONAL SUPERVISOR: GILBERT OGAZ
CALCULATED-DESIGNED BY: JERRY CAGLE
CHECKED BY: MYHOA TON
REVISED BY
DATE REVISED

LAST REVISION 00-00-00
DATE PLOTTED => 10-MAY-2010
TIME PLOTTED => 11:20

NOTE: FOR COMPLETE RIGHT OF WAY AND ACCURATE ACCESS DATA, SEE RIGHT OF WAY RECORD MAPS AT DISTRICT OFFICE.

Dist	COUNTY	ROUTE	POST MILES TOTAL PROJECT	SHEET No.	TOTAL SHEETS
03	ED	50	32.3/39.3	13	67

REGISTERED CIVIL ENGINEER 7-29-09 DATE

5-10-10
PLANS APPROVAL DATE

REGISTERED PROFESSIONAL ENGINEER GERALD R. CAGLE No. 52121 Exp. 12-31-10 CIVIL STATE OF CALIFORNIA

THE STATE OF CALIFORNIA OR ITS OFFICERS OR AGENTS SHALL NOT BE RESPONSIBLE FOR THE ACCURACY OR COMPLETENESS OF SCANNED COPIES OF THIS PLAN SHEET.

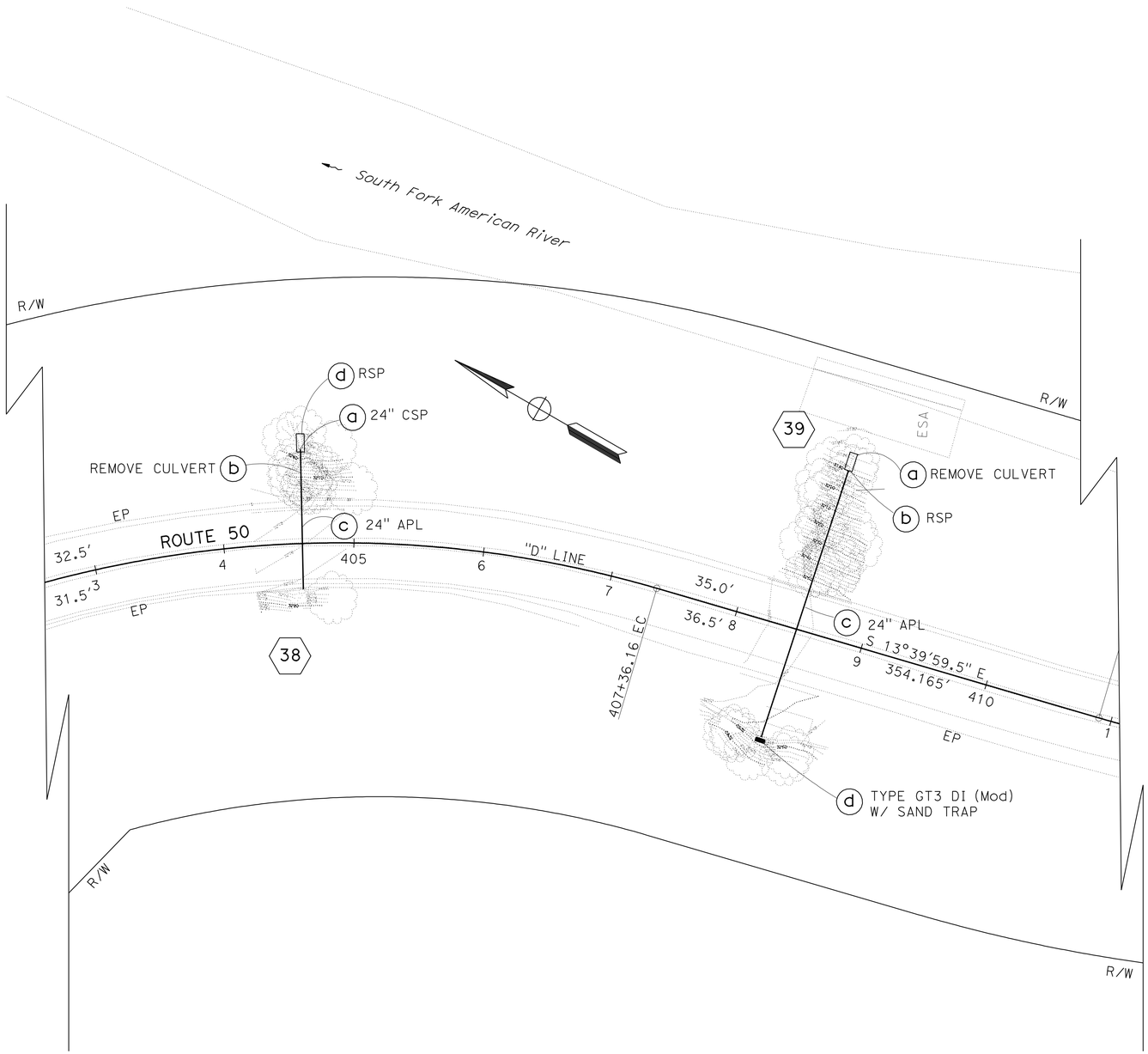

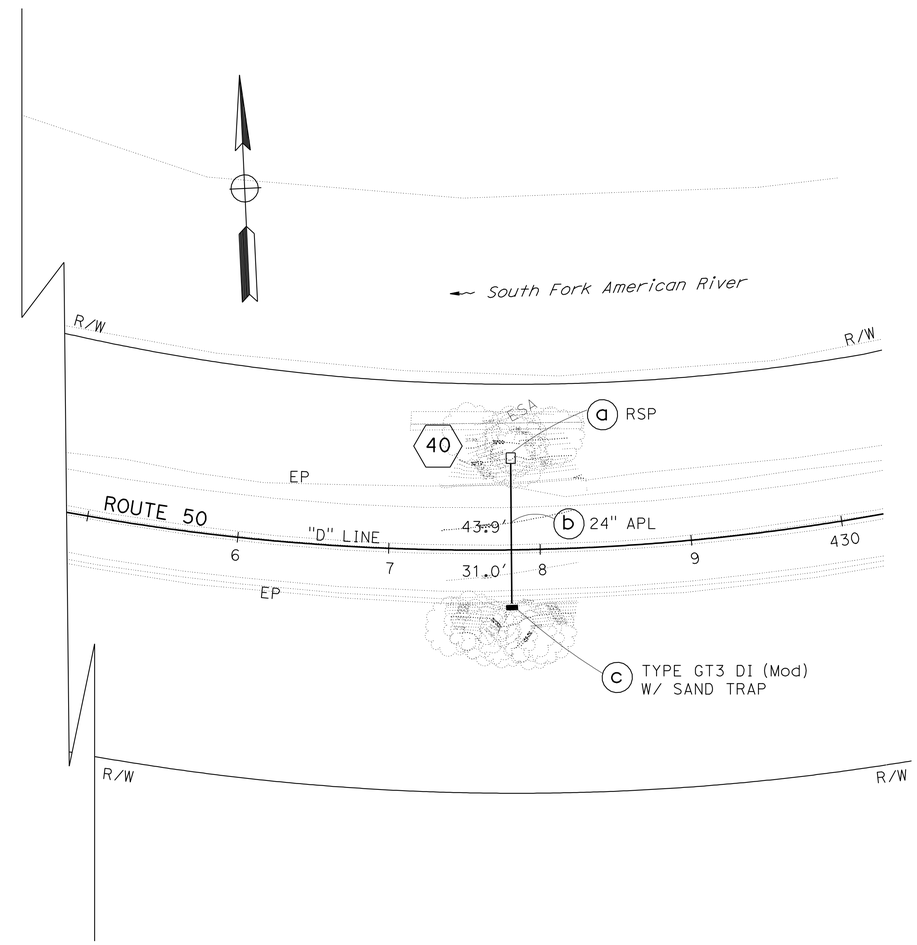

DRAINAGE PLAN

SCALE: 1" = 50'

D-11

THIS PLAN ACCURATE FOR DRAINAGE WORK ONLY.

STATE OF CALIFORNIA - DEPARTMENT OF TRANSPORTATION
NORTH REGION
OFFICE OF DESIGN SOUTH
DESIGN BRANCH S2

FUNCTIONAL SUPERVISOR: GILBERT OGAZ
CALCULATED-DESIGNED BY: JERRY CAGLE
CHECKED BY: MYHOA TON
REVISED BY
DATE REVISED

LAST REVISION 00-00-00
DATE PLOTTED => 10-MAY-2010
TIME PLOTTED => 10:50

Dist	COUNTY	ROUTE	POST MILES TOTAL PROJECT	SHEET No.	TOTAL SHEETS
03	ED	50	32.3/39.3	14	67

REGISTERED CIVIL ENGINEER 7-29-09 DATE

5-10-10
PLANS APPROVAL DATE

REGISTERED PROFESSIONAL ENGINEER GERALD R. CAGLE No. 52121 Exp. 12-31-10 CIVIL STATE OF CALIFORNIA

THE STATE OF CALIFORNIA OR ITS OFFICERS OR AGENTS SHALL NOT BE RESPONSIBLE FOR THE ACCURACY OR COMPLETENESS OF SCANNED COPIES OF THIS PLAN SHEET.

NOTES:

1. DI STATION , OFFSET AND TOP OF GRATE ELEVATIONS ARE TO THE CENTER OF THE STRUCTURE, UNLESS OTHERWISE SHOWN.
2. ALL ELEVATIONS ARE IN FEET.

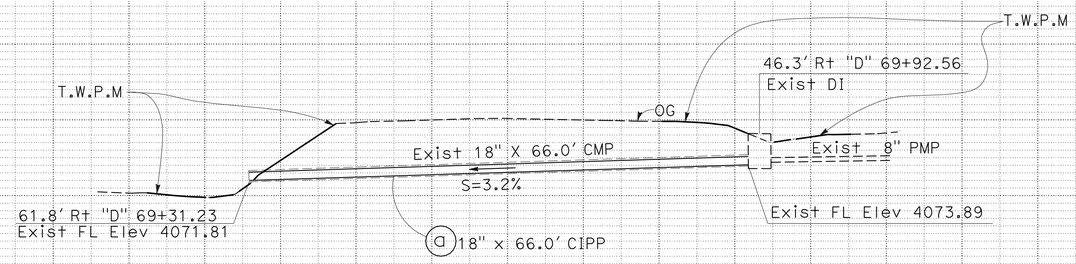

DRAINAGE SYSTEM No. 1

"D" 69+31.23 TO 69+92.56

PM 32.28

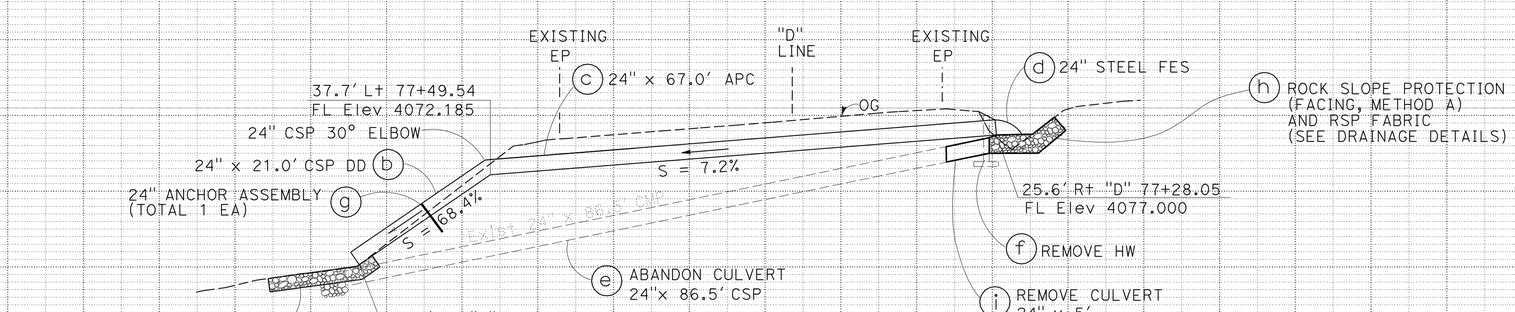

DRAINAGE SYSTEM No. 2

"D" 77+36.40

PM 32.57

DRAINAGE PROFILES

SCALE: 1" = 10' Horiz
1" = 10' Vert

DP-1

REVISED BY | DATE REVISED
JERRY CAGLE | MYHOA TON
CALCULATED-DESIGNED BY | CHECKED BY
FUNCTIONAL SUPERVISOR: JERRY CAGLE

STATE OF CALIFORNIA - DEPARTMENT OF TRANSPORTATION
NORTH REGION
OFFICE OF DESIGN SOUTH
DESIGN BRANCH S2
Caltrans

LAST REVISION 00-00-00 | DATE PLOTTED => 10-MAY-2010 | TIME PLOTTED => 11:04

Dist	COUNTY	ROUTE	POST MILES TOTAL PROJECT	SHEET No.	TOTAL SHEETS
03	ED	50	32.3/39.3	15	67

REGISTERED CIVIL ENGINEER 7-29-09 DATE

5-10-10
PLANS APPROVAL DATE

REGISTERED PROFESSIONAL ENGINEER GERALD R. CAGLE No. 52121 Exp. 12-31-10 CIVIL STATE OF CALIFORNIA

THE STATE OF CALIFORNIA OR ITS OFFICERS OR AGENTS SHALL NOT BE RESPONSIBLE FOR THE ACCURACY OR COMPLETENESS OF SCANNED COPIES OF THIS PLAN SHEET.

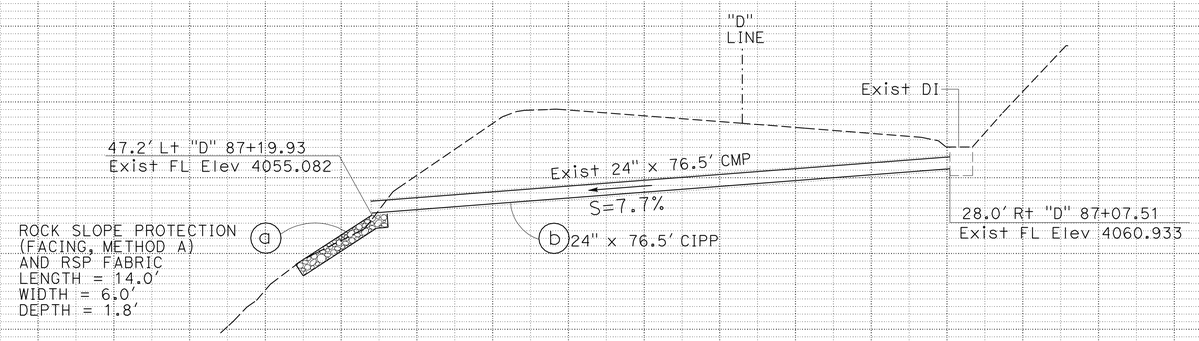

DRAINAGE SYSTEM No. 3

"D" 87+12.44

PM 32.74

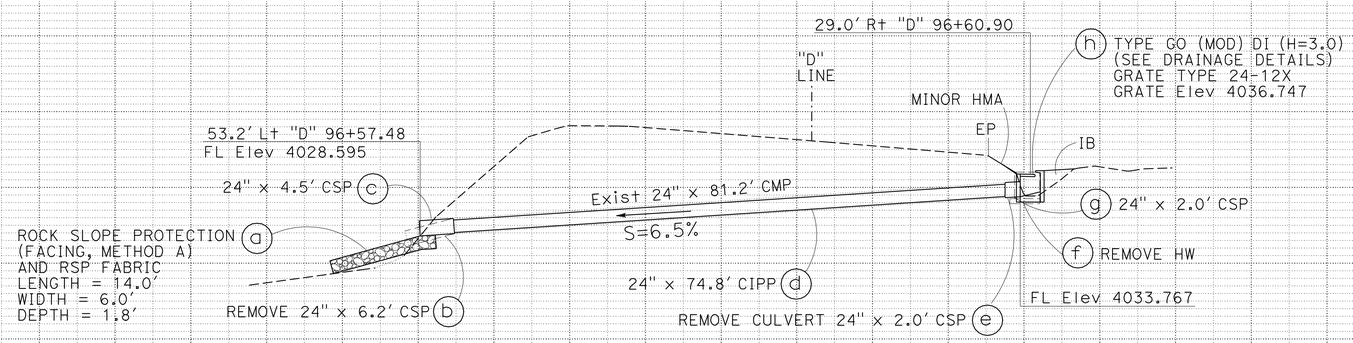

DRAINAGE SYSTEM No. 4

"D" 96+59.68

PM 32.93

DRAINAGE PROFILES

SCALE: 1" = 10' Horiz
1" = 10' Vert

DP-2

STATE OF CALIFORNIA - DEPARTMENT OF TRANSPORTATION
NORTH REGION
OFFICE OF DESIGN SOUTH
DESIGN BRANCH S2

FUNCTIONAL SUPERVISOR: JERRY CAGLE
CALCULATED-DESIGNED BY: JERRY CAGLE
CHECKED BY: MYHOA TON
REVISED BY
DATE REVISED

LAST REVISION 00-00-00
DATE PLOTTED => 10-MAY-2010
TIME PLOTTED => 11:30

Dist	COUNTY	ROUTE	POST MILES TOTAL PROJECT	SHEET No.	TOTAL SHEETS
03	ED	50	32.3/39.3	16	67

REGISTERED CIVIL ENGINEER 7-29-09 DATE

5-10-10
PLANS APPROVAL DATE

REGISTERED PROFESSIONAL ENGINEER GERALD R. CAGLE No. 52121 Exp. 12-31-10 CIVIL STATE OF CALIFORNIA

THE STATE OF CALIFORNIA OR ITS OFFICERS OR AGENTS SHALL NOT BE RESPONSIBLE FOR THE ACCURACY OR COMPLETENESS OF SCANNED COPIES OF THIS PLAN SHEET.

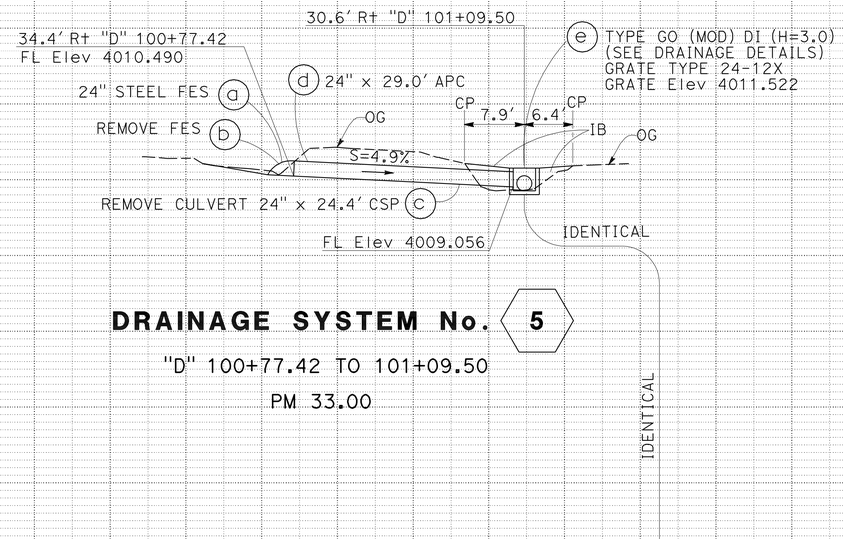

DRAINAGE SYSTEM No. 5

"D" 100+77.42 TO 101+09.50

PM 33.00

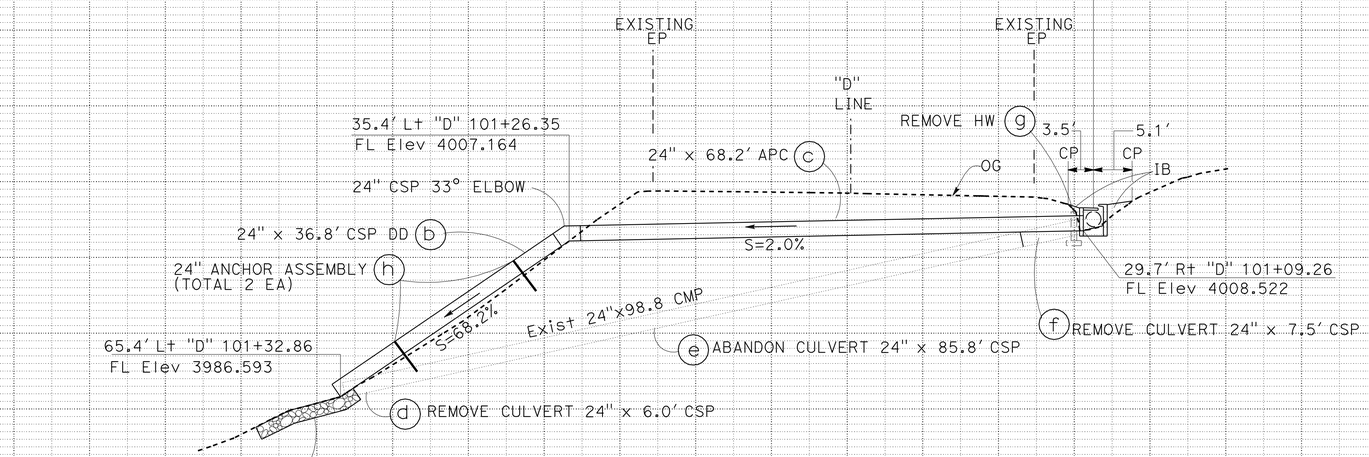

DRAINAGE SYSTEM No. 6

"D" 101+17.38

PM 33.01

DRAINAGE PROFILES

SCALE: 1" = 10' Horiz
1" = 10' Vert

DP-3

STATE OF CALIFORNIA - DEPARTMENT OF TRANSPORTATION
NORTH REGION
OFFICE OF DESIGN SOUTH
DESIGN BRANCH S2

Caltrans

FUNCTIONAL SUPERVISOR: JERRY CAGLE
CALCULATED-DESIGNED BY: JERRY CAGLE
CHECKED BY: MYHOA TON
REVISED BY
DATE REVISED

LAST REVISION 00-00-00
DATE PLOTTED => 10-MAY-2010
TIME PLOTTED => 12:52

BORDER LAST REVISED 4/11/2008
RELATIVE BORDER SCALE IS IN INCHES 0 1 2 3
USERNAME => trlim
DGN FILE => 33c760ib003.dgn
CU 03252
EA 3C7601

Dist	COUNTY	ROUTE	POST MILES TOTAL PROJECT	SHEET No.	TOTAL SHEETS
03	ED	50	32.3/39.3	17	67

REGISTERED CIVIL ENGINEER 7-29-09 DATE

5-10-10
PLANS APPROVAL DATE

GERALD R. CAGLE No. 52121 Exp. 12-31-10 CIVIL — REGISTERED PROFESSIONAL ENGINEER — STATE OF CALIFORNIA

THE STATE OF CALIFORNIA OR ITS OFFICERS OR AGENTS SHALL NOT BE RESPONSIBLE FOR THE ACCURACY OR COMPLETENESS OF SCANNED COPIES OF THIS PLAN SHEET.

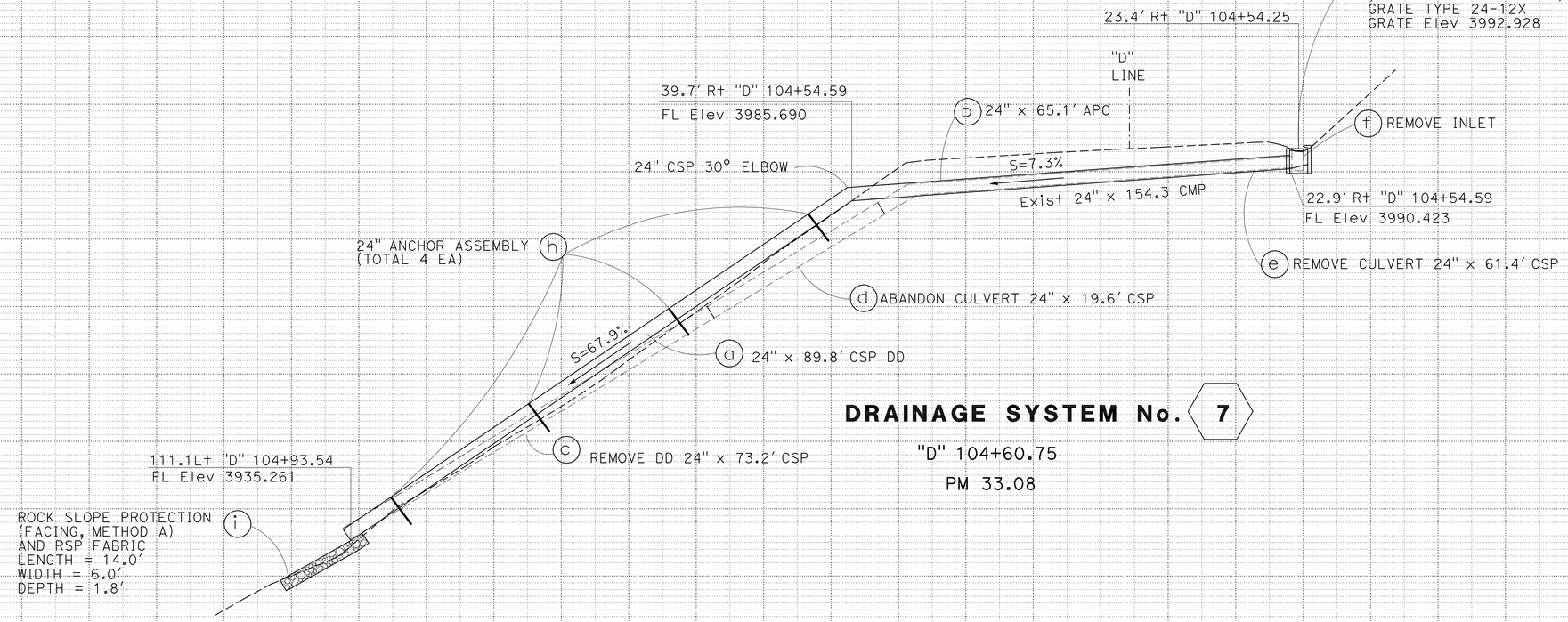

DRAINAGE SYSTEM No. 7

"D" 104+60.75

PM 33.08

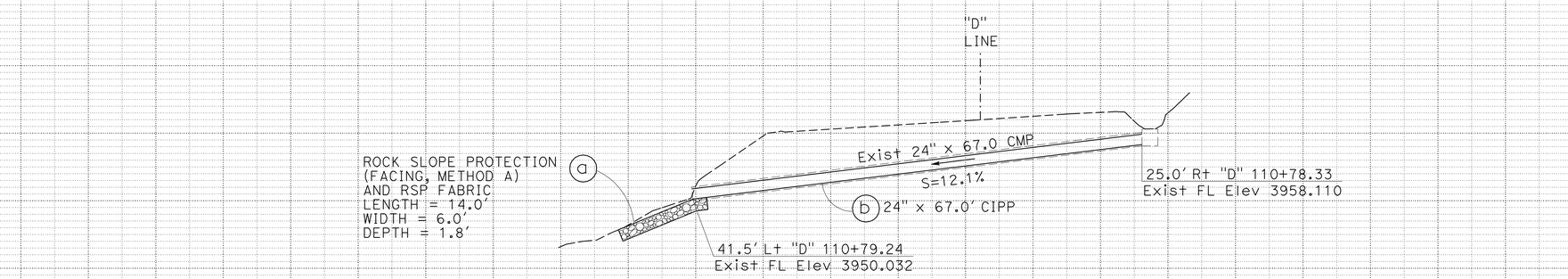

DRAINAGE SYSTEM No. 8

"D" 110+78.66

PM 33.20

DRAINAGE PROFILES

SCALE: 1" = 10' Horiz
1" = 10' Vert

DP-4

STATE OF CALIFORNIA - DEPARTMENT OF TRANSPORTATION
Caltrans
NORTH REGION
OFFICE OF DESIGN SOUTH
DESIGN BRANCH S2

FUNCTIONAL SUPERVISOR: JERRY CAGLE
CALCULATED-DESIGNED BY: JERRY CAGLE
CHECKED BY: MYHOA TON
REVISED BY
DATE REVISED

LAST REVISION 00-00-00 DATE PLOTTED => 10-MAY-2010 TIME PLOTTED => 11:30

Dist	COUNTY	ROUTE	POST MILES TOTAL PROJECT	SHEET No.	TOTAL SHEETS
03	ED	50	32.3/39.3	18	67

REGISTERED CIVIL ENGINEER 7-29-09 DATE

5-10-10
PLANS APPROVAL DATE

REGISTERED PROFESSIONAL ENGINEER GERALD R. CAGLE No. 52121 Exp. 12-31-10 CIVIL STATE OF CALIFORNIA

THE STATE OF CALIFORNIA OR ITS OFFICERS OR AGENTS SHALL NOT BE RESPONSIBLE FOR THE ACCURACY OR COMPLETENESS OF SCANNED COPIES OF THIS PLAN SHEET.

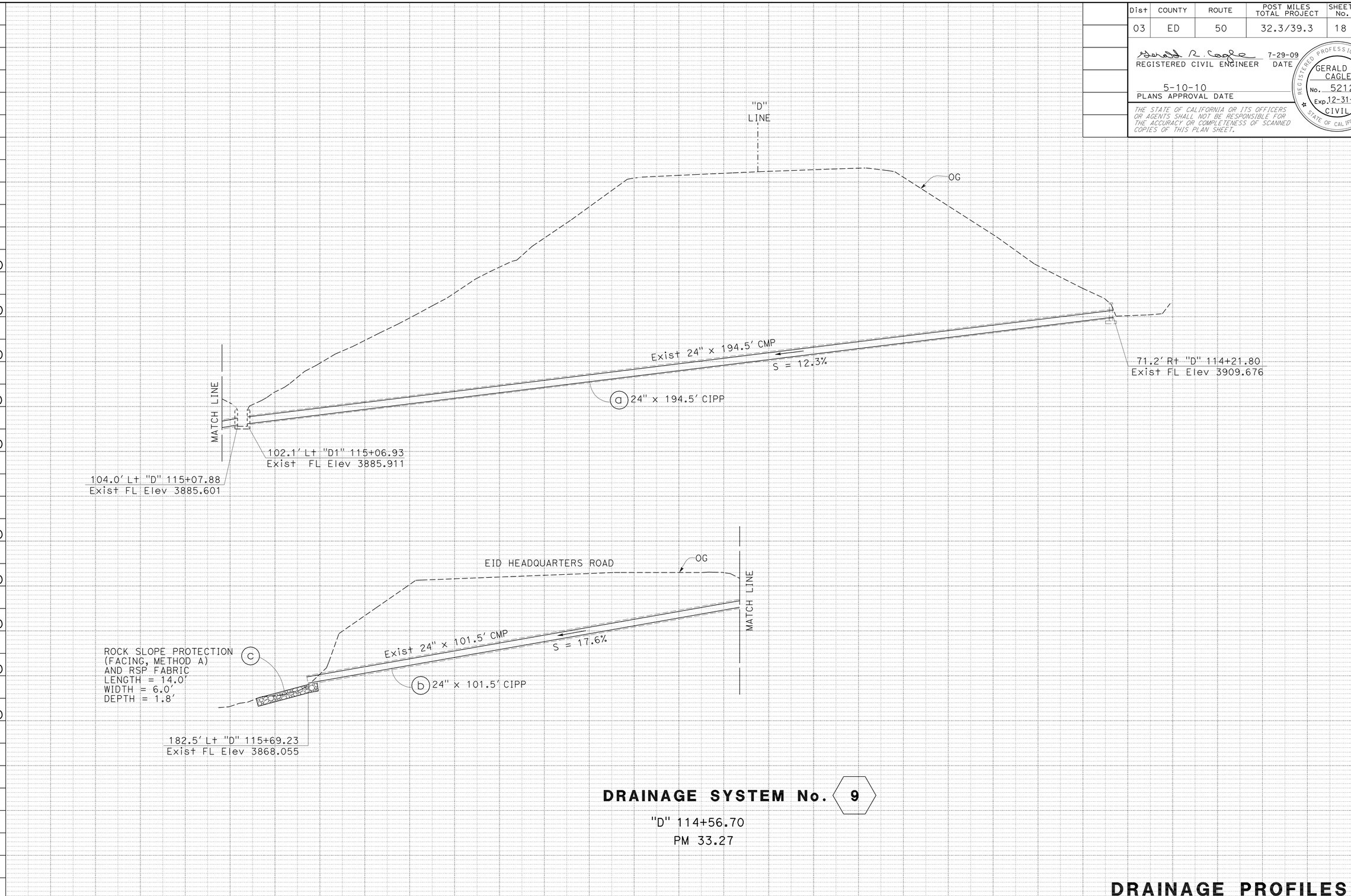

DRAINAGE SYSTEM No. 9

"D" 114+56.70
PM 33.27

DRAINAGE PROFILES

SCALE: 1" = 10' Horiz
1" = 10' Vert

DP-5

STATE OF CALIFORNIA - DEPARTMENT OF TRANSPORTATION
Caltrans
NORTH REGION
OFFICE OF DESIGN SOUTH
DESIGN BRANCH S2

FUNCTIONAL SUPERVISOR: JERRY CAGLE
CALCULATED-DESIGNED BY: JERRY CAGLE
CHECKED BY: MYHOA TON
REVISED BY
DATE REVISED

LAST REVISION 00-00-00 | DATE PLOTTED => 10-MAY-2010 | TIME PLOTTED => 11:30

Dist	COUNTY	ROUTE	POST MILES TOTAL PROJECT	SHEET No.	TOTAL SHEETS
03	ED	50	32.3/39.3	19	67

REGISTERED CIVIL ENGINEER 7-29-09 DATE

5-10-10
PLANS APPROVAL DATE

REGISTERED PROFESSIONAL ENGINEER GERALD R. CAGLE No. 52121 Exp. 12-31-10 CIVIL STATE OF CALIFORNIA

THE STATE OF CALIFORNIA OR ITS OFFICERS OR AGENTS SHALL NOT BE RESPONSIBLE FOR THE ACCURACY OR COMPLETENESS OF SCANNED COPIES OF THIS PLAN SHEET.

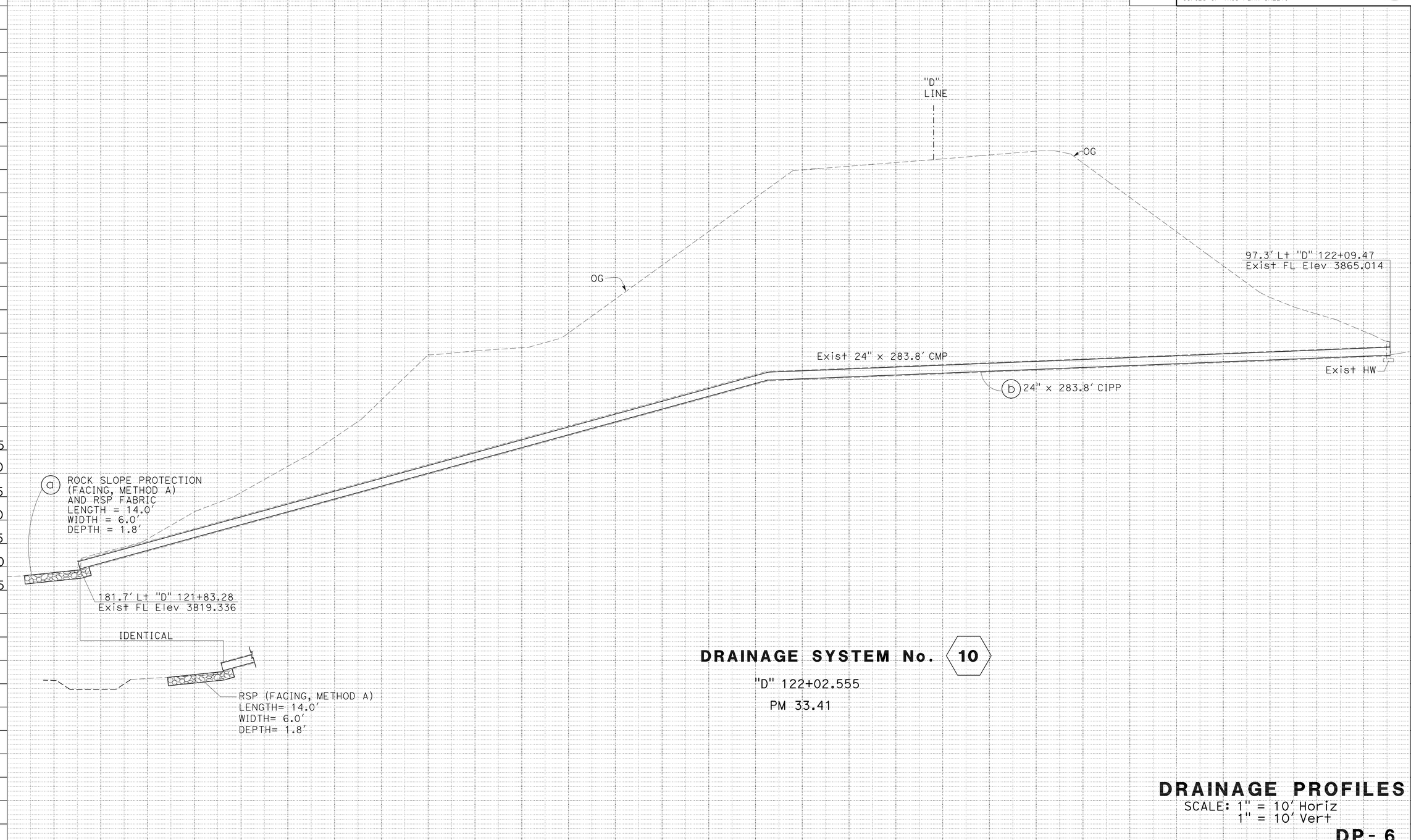

DRAINAGE SYSTEM No. 10

"D" 122+02.555

PM 33.41

DRAINAGE PROFILES

SCALE: 1" = 10' Horiz
1" = 10' Vert

DP- 6

REVISED BY | DATE REVISED

JERRY CAGLE | MYHOA TON

CALCULATED-DESIGNED BY | CHECKED BY

FUNCTIONAL SUPERVISOR | JERRY CAGLE

STATE OF CALIFORNIA - DEPARTMENT OF TRANSPORTATION
NORTH REGION
OFFICE OF DESIGN SOUTH
DESIGN BRANCH S2

Caltrans

LAST REVISION 00-00-00 | DATE PLOTTED => 10-MAY-2010 TIME PLOTTED => 11:18

Dist	COUNTY	ROUTE	POST MILES TOTAL PROJECT	SHEET No.	TOTAL SHEETS
03	ED	50	32.3/39.3	20	67

REGISTERED CIVIL ENGINEER 7-29-09 DATE

5-10-10
PLANS APPROVAL DATE

REGISTERED PROFESSIONAL ENGINEER GERALD R. CAGLE No. 52121 Exp. 12-31-10 CIVIL STATE OF CALIFORNIA

THE STATE OF CALIFORNIA OR ITS OFFICERS OR AGENTS SHALL NOT BE RESPONSIBLE FOR THE ACCURACY OR COMPLETENESS OF SCANNED COPIES OF THIS PLAN SHEET.

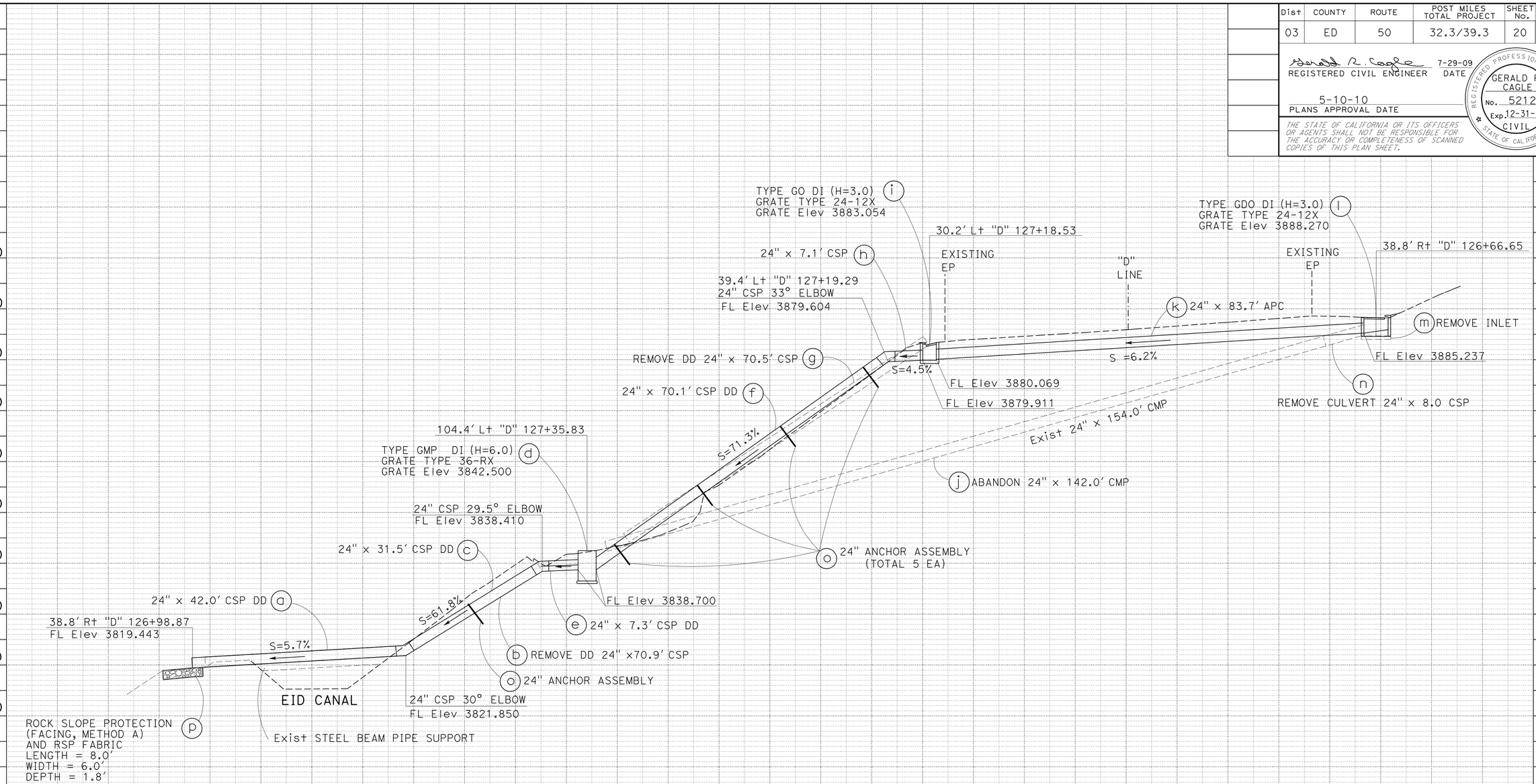

DRAINAGE SYSTEM No. 11

"D" 126+93.75
PM 33.51

DRAINAGE PROFILES

SCALE: 1" = 10' Horiz
1" = 10' Vert

DP-7

STATE OF CALIFORNIA - DEPARTMENT OF TRANSPORTATION
Caltrans
NORTH REGION
OFFICE OF DESIGN SOUTH
DESIGN BRANCH S2

FUNCTIONAL SUPERVISOR: JERRY CAGLE
CALCULATED-DESIGNED BY: JERRY CAGLE
CHECKED BY: MYHOA TON
REVISED BY
DATE REVISED

LAST REVISION 00-00-00 | DATE PLOTTED => 10-MAY-2010 | TIME PLOTTED => 11:30

BORDER LAST REVISED 4/11/2008 | RELATIVE BORDER SCALE IS IN INCHES 0 1 2 3 | USERNAME => trlim | DGN FILE => 33c760ib007.dgn | CU 03252 | EA 3C7601

Dist	COUNTY	ROUTE	POST MILES TOTAL PROJECT	SHEET No.	TOTAL SHEETS
03	ED	50	32.3/39.3	21	67

REGISTERED CIVIL ENGINEER 7-29-09 DATE

5-10-10
PLANS APPROVAL DATE

REGISTERED PROFESSIONAL ENGINEER GERALD R. CAGLE No. 52121 Exp. 12-31-10 CIVIL STATE OF CALIFORNIA

THE STATE OF CALIFORNIA OR ITS OFFICERS OR AGENTS SHALL NOT BE RESPONSIBLE FOR THE ACCURACY OR COMPLETENESS OF SCANNED COPIES OF THIS PLAN SHEET.

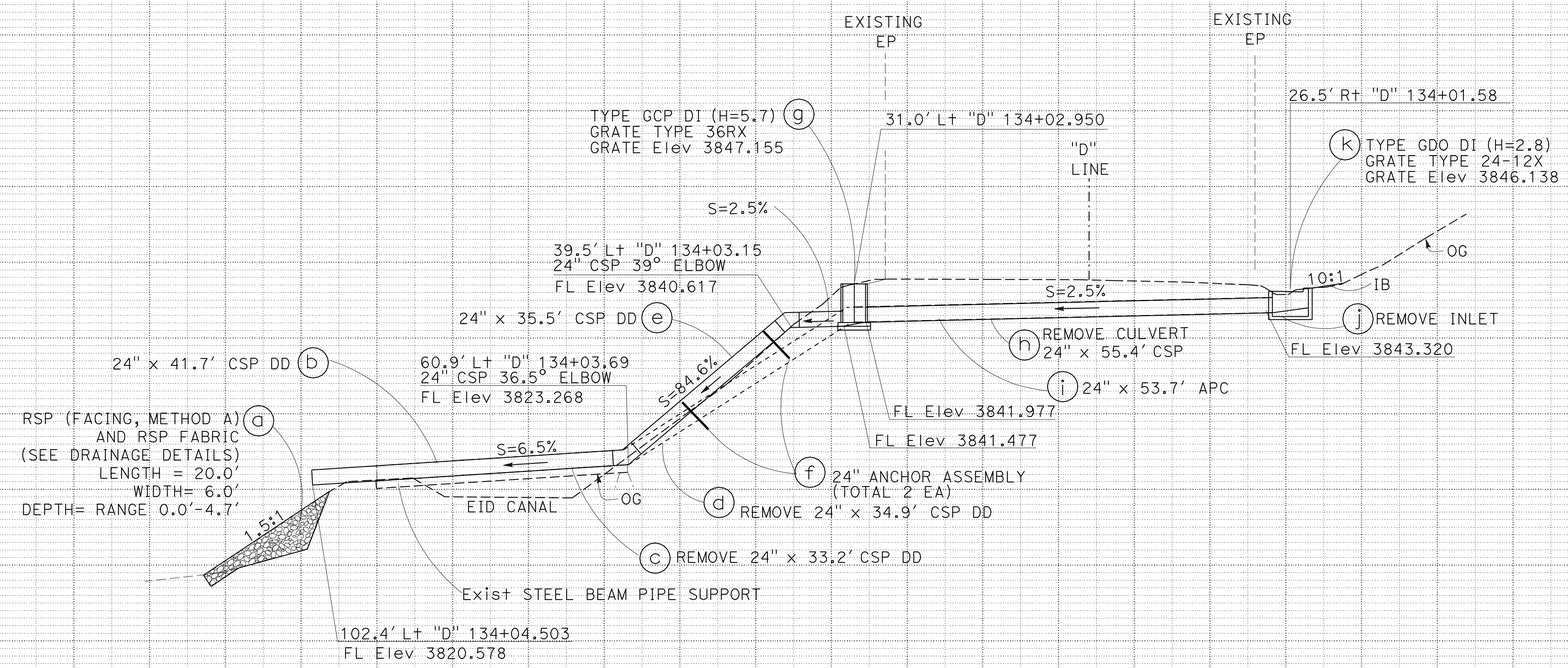

DRAINAGE SYSTEM No. 12

"D" 134+02.186
PM 33.65

DRAINAGE PROFILES

SCALE: 1" = 10' Horiz
1" = 10' Vert

DP-8

STATE OF CALIFORNIA - DEPARTMENT OF TRANSPORTATION
Caltrans
NORTH REGION
OFFICE OF DESIGN SOUTH
DESIGN BRANCH S2

FUNCTIONAL SUPERVISOR: JERRY CAGLE
CALCULATED-DESIGNED BY: JERRY CAGLE
CHECKED BY: MYHOA TON
REVISED BY
DATE REVISED

LAST REVISION 00-00-00 | DATE PLOTTED => 10-MAY-2010 | TIME PLOTTED => 11:18

Dist	COUNTY	ROUTE	POST MILES TOTAL PROJECT	SHEET No.	TOTAL SHEETS
03	ED	50	32.3/39.3	22	67

REGISTERED CIVIL ENGINEER 7-29-09 DATE

5-10-10
PLANS APPROVAL DATE

REGISTERED PROFESSIONAL ENGINEER GERALD R. CAGLE No. 52121 Exp. 12-31-10 CIVIL STATE OF CALIFORNIA

THE STATE OF CALIFORNIA OR ITS OFFICERS OR AGENTS SHALL NOT BE RESPONSIBLE FOR THE ACCURACY OR COMPLETENESS OF SCANNED COPIES OF THIS PLAN SHEET.

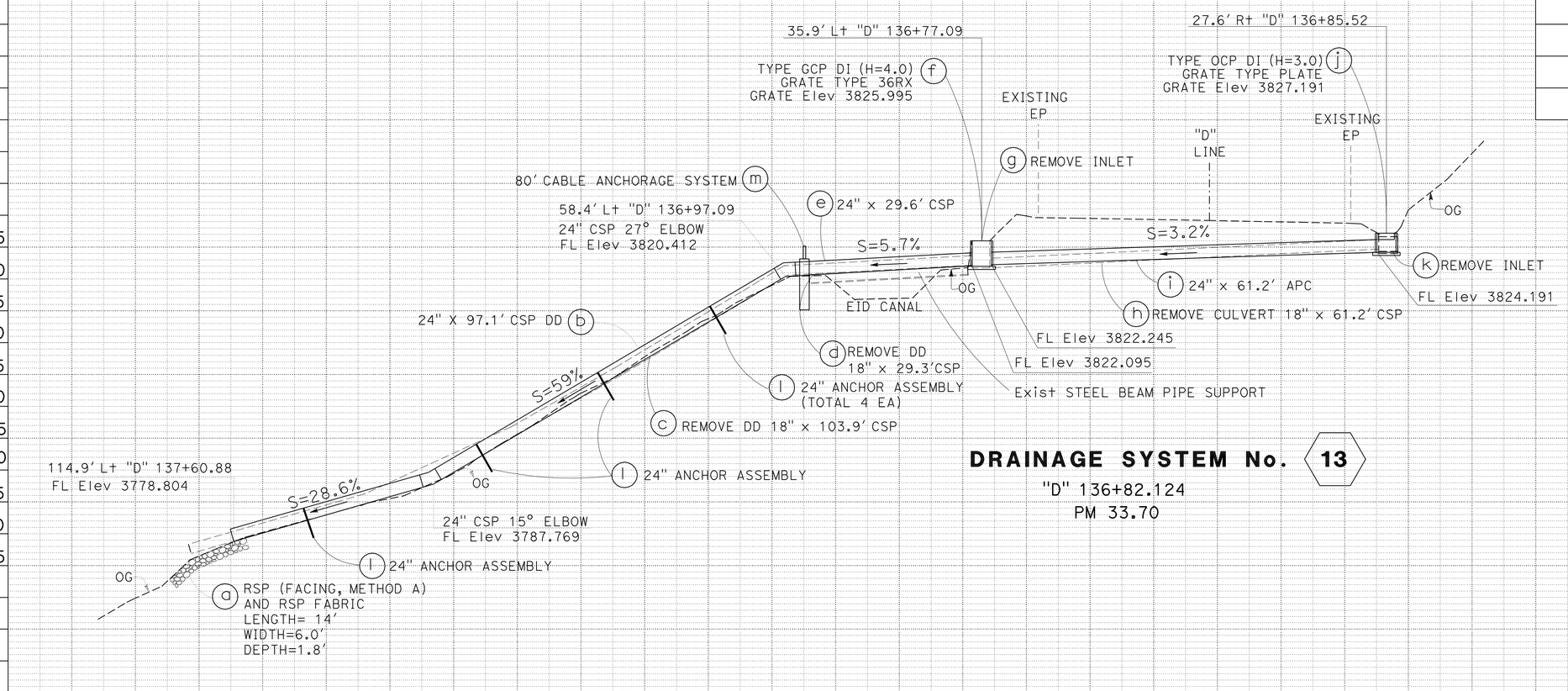

DRAINAGE SYSTEM No. 13

"D" 136+82.124
PM 33.70

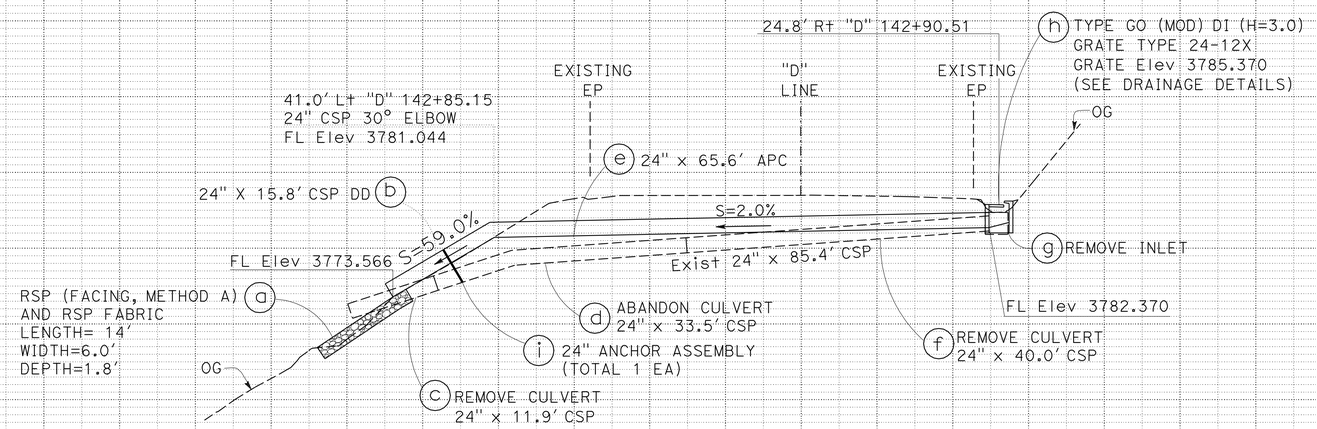

DRAINAGE SYSTEM No. 14

"D" 142+88.471
PM 33.81

DRAINAGE PROFILES

SCALE: 1" = 10' Horiz
1" = 10' Vert

DP-9

REVISED BY | DATE REVISED
JERRY CAGLE | MYHOA TON
CALCULATED-DESIGNED BY | CHECKED BY
FUNCTIONAL SUPERVISOR: JERRY CAGLE

STATE OF CALIFORNIA - DEPARTMENT OF TRANSPORTATION
Caltrans
NORTH REGION
OFFICE OF DESIGN SOUTH
DESIGN BRANCH S2

LAST REVISION 00-00-00 | DATE PLOTTED => 10-MAY-2010 | TIME PLOTTED => 10:12

Dist	COUNTY	ROUTE	POST MILES TOTAL PROJECT	SHEET No.	TOTAL SHEETS
03	ED	50	32.3/39.3	23	67

REGISTERED CIVIL ENGINEER 7-29-09 DATE

5-10-10
PLANS APPROVAL DATE

REGISTERED PROFESSIONAL ENGINEER GERALD R. CAGLE No. 52121 Exp. 12-31-10 CIVIL STATE OF CALIFORNIA

THE STATE OF CALIFORNIA OR ITS OFFICERS OR AGENTS SHALL NOT BE RESPONSIBLE FOR THE ACCURACY OR COMPLETENESS OF SCANNED COPIES OF THIS PLAN SHEET.

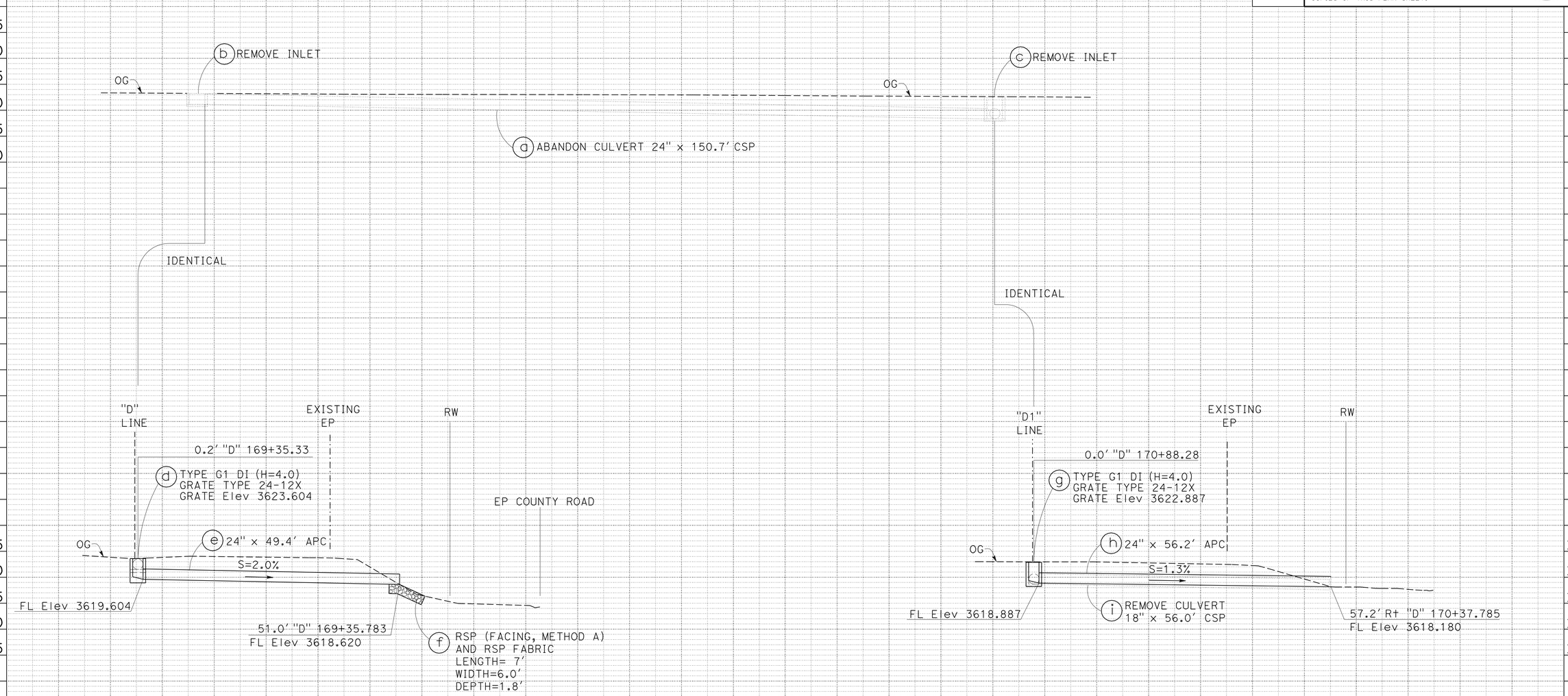

DRAINAGE SYSTEM No. 15

"D" 169+35.330
PM 34.30

DRAINAGE PROFILES

SCALE: 1" = 10' Horiz
1" = 10' Vert

DP-10

STATE OF CALIFORNIA - DEPARTMENT OF TRANSPORTATION
NORTH REGION
OFFICE OF DESIGN SOUTH
DESIGN BRANCH S2

FUNCTIONAL SUPERVISOR: JERRY CAGLE
CALCULATED-DESIGNED BY: JERRY CAGLE
CHECKED BY: MYHOA TON
REVISED BY / DATE REVISED

LAST REVISION 00-00-00
DATE PLOTTED => 10-MAY-2010
TIME PLOTTED => 10:12

Dist	COUNTY	ROUTE	POST MILES TOTAL PROJECT	SHEET No.	TOTAL SHEETS
03	ED	50	32.3/39.3	24	67

REGISTERED CIVIL ENGINEER 7-29-09 DATE

5-10-10
PLANS APPROVAL DATE

REGISTERED PROFESSIONAL ENGINEER GERALD R. CAGLE No. 52121 Exp. 12-31-10 CIVIL STATE OF CALIFORNIA

THE STATE OF CALIFORNIA OR ITS OFFICERS OR AGENTS SHALL NOT BE RESPONSIBLE FOR THE ACCURACY OR COMPLETENESS OF SCANNED COPIES OF THIS PLAN SHEET.

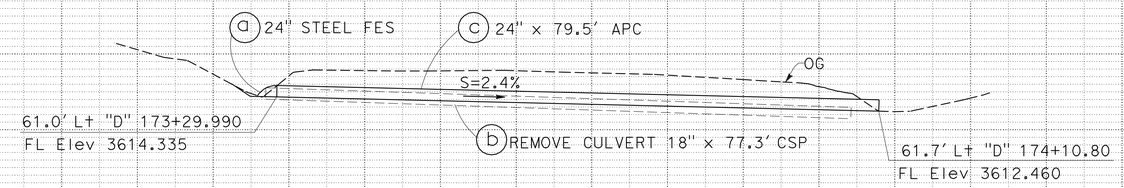

DRAINAGE SYSTEM No. 16

"D" 173+29.990 TO 174+10.800
PM 34.38

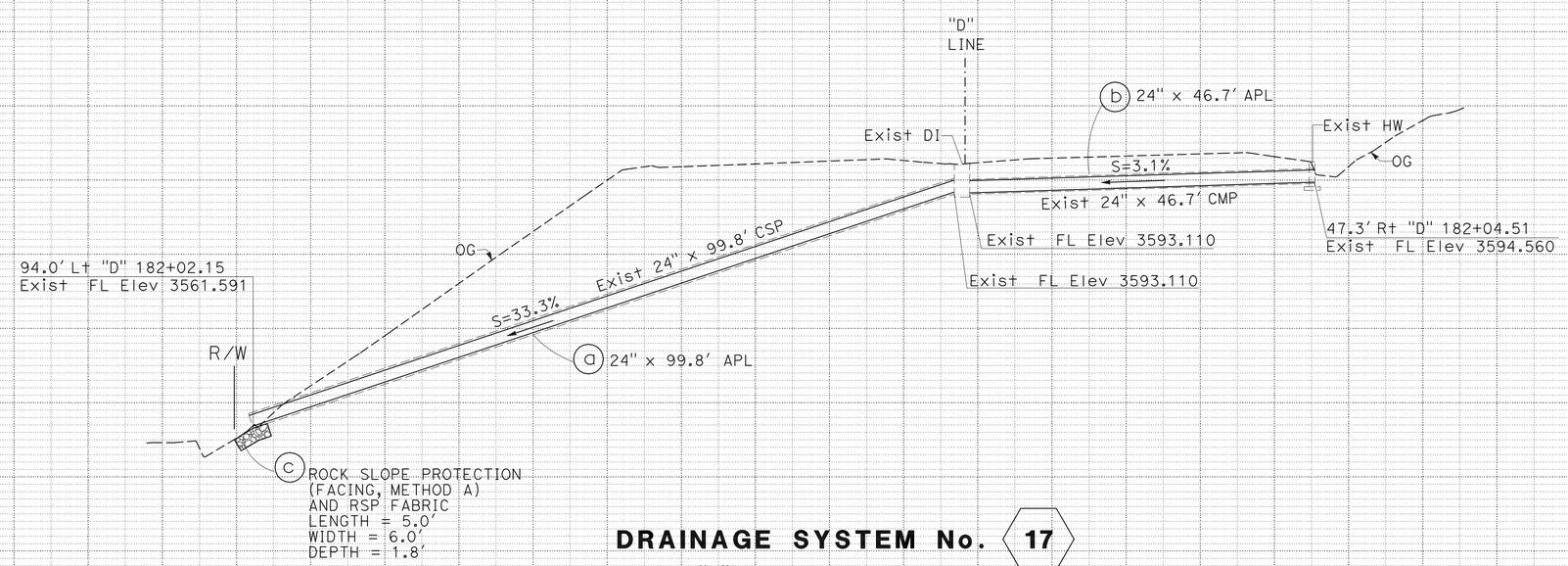

DRAINAGE SYSTEM No. 17

"D" 182+03.722
PM 34.54

DRAINAGE PROFILES

SCALE: 1" = 10' Horiz
1" = 10' Vert

DP-11

STATE OF CALIFORNIA - DEPARTMENT OF TRANSPORTATION
NORTH REGION
OFFICE OF DESIGN SOUTH
DESIGN BRANCH S2

FUNCTIONAL SUPERVISOR: JERRY CAGLE
CALCULATED-DESIGNED BY: MYHOA TON
CHECKED BY: JERRY CAGLE
REVISED BY / DATE REVISED

LAST REVISION 00-00-00
DATE PLOTTED => 10-MAY-2010
TIME PLOTTED => 10:13

Dist	COUNTY	ROUTE	POST MILES TOTAL PROJECT	SHEET No.	TOTAL SHEETS
03	ED	50	32.3/39.3	25	67

REGISTERED CIVIL ENGINEER 7-29-09 DATE

5-10-10
PLANS APPROVAL DATE

REGISTERED PROFESSIONAL ENGINEER GERALD R. CAGLE No. 52121 Exp. 12-31-10 CIVIL STATE OF CALIFORNIA

THE STATE OF CALIFORNIA OR ITS OFFICERS OR AGENTS SHALL NOT BE RESPONSIBLE FOR THE ACCURACY OR COMPLETENESS OF SCANNED COPIES OF THIS PLAN SHEET.

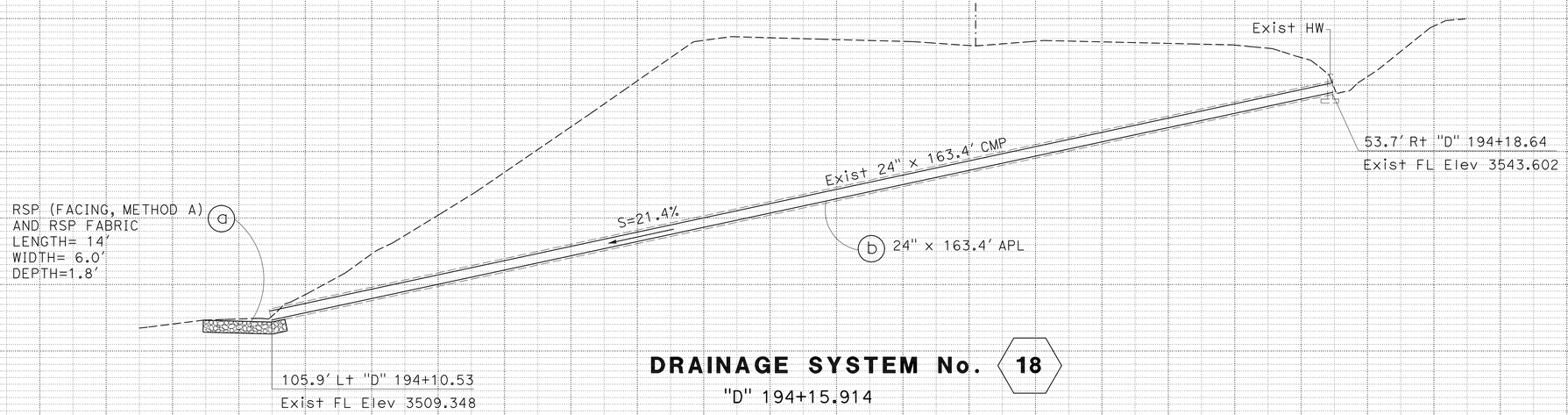

DRAINAGE SYSTEM No. 18

"D" 194+15.914

PM 34.76

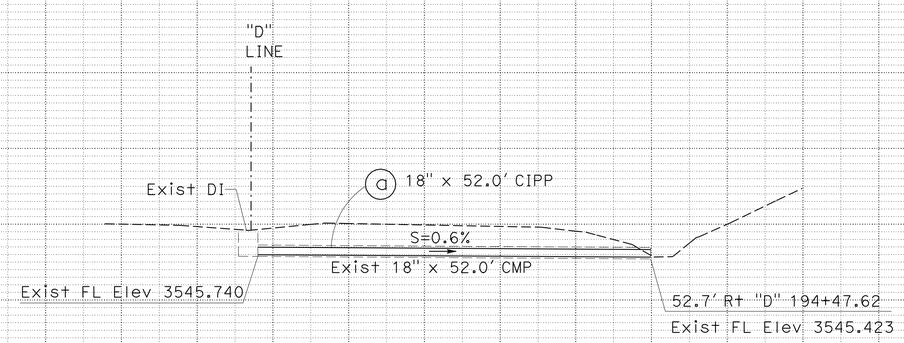

DRAINAGE SYSTEM No. 19

"D" 194+46.113

PM 34.77

DRAINAGE PROFILES

SCALE: 1" = 10' Horiz
1" = 10' Vert

DP-12

STATE OF CALIFORNIA - DEPARTMENT OF TRANSPORTATION
NORTH REGION
OFFICE OF DESIGN SOUTH
DESIGN BRANCH S2

Caltrans

FUNCTIONAL SUPERVISOR: JERRY CAGLE

CALCULATED-DESIGNED BY: JERRY CAGLE
CHECKED BY: MYHOA TON

REVISED BY
DATE REVISED

LAST REVISION 00-00-00
DATE PLOTTED => 10-MAY-2010
TIME PLOTTED => 10:13

Dist	COUNTY	ROUTE	POST MILES TOTAL PROJECT	SHEET No.	TOTAL SHEETS
03	ED	50	32.3/39.3	26	67

REGISTERED CIVIL ENGINEER 7-29-09 DATE

5-10-10
PLANS APPROVAL DATE

REGISTERED PROFESSIONAL ENGINEER GERALD R. CAGLE No. 52121 Exp. 12-31-10 CIVIL STATE OF CALIFORNIA

THE STATE OF CALIFORNIA OR ITS OFFICERS OR AGENTS SHALL NOT BE RESPONSIBLE FOR THE ACCURACY OR COMPLETENESS OF SCANNED COPIES OF THIS PLAN SHEET.

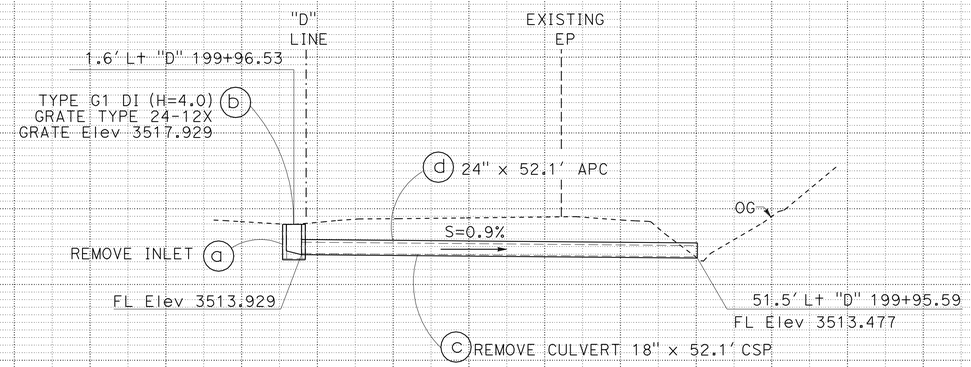

DRAINAGE SYSTEM No. 20

"D" 199+96.521
PM 34.87

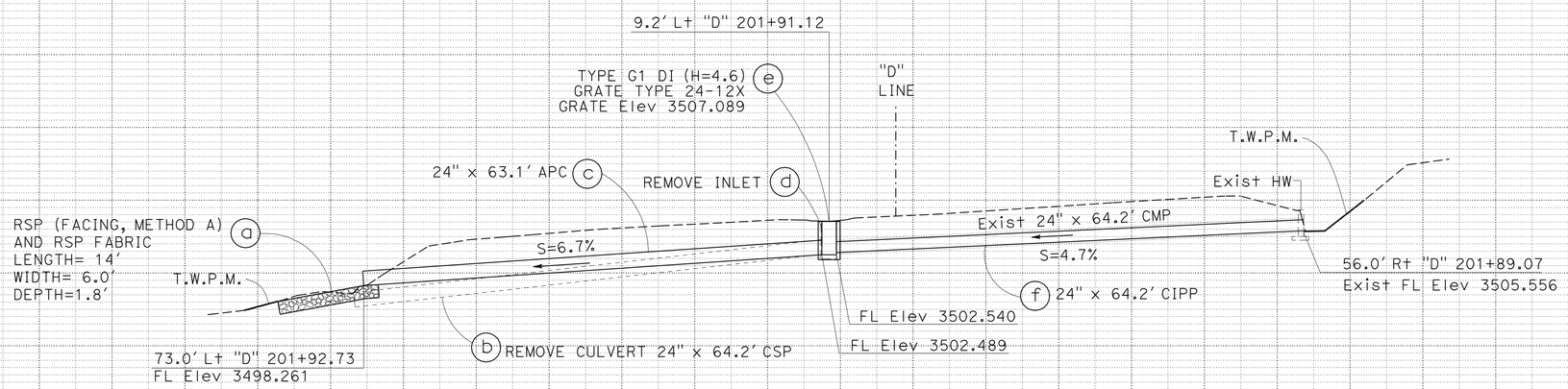

DRAINAGE SYSTEM No. 21

"D" 201+85.953
PM 34.90

DRAINAGE PROFILES

SCALE: 1" = 10' Horiz
1" = 10' Vert

DP-13

STATE OF CALIFORNIA - DEPARTMENT OF TRANSPORTATION
NORTH REGION
OFFICE OF DESIGN SOUTH
DESIGN BRANCH S2

FUNCTIONAL SUPERVISOR: JERRY CAGLE
CALCULATED-DESIGNED BY: JERRY CAGLE
CHECKED BY: MYHOA TON
REVISED BY / DATE REVISED

LAST REVISION 00-00-00
DATE PLOTTED => 10-MAY-2010
TIME PLOTTED => 10:13

Dist	COUNTY	ROUTE	POST MILES TOTAL PROJECT	SHEET No.	TOTAL SHEETS
03	ED	50	32.3/39.3	27	67

REGISTERED CIVIL ENGINEER 7-29-09 DATE

5-10-10
PLANS APPROVAL DATE

REGISTERED PROFESSIONAL ENGINEER GERALD R. CAGLE No. 52121 Exp. 12-31-10 CIVIL STATE OF CALIFORNIA

THE STATE OF CALIFORNIA OR ITS OFFICERS OR AGENTS SHALL NOT BE RESPONSIBLE FOR THE ACCURACY OR COMPLETENESS OF SCANNED COPIES OF THIS PLAN SHEET.

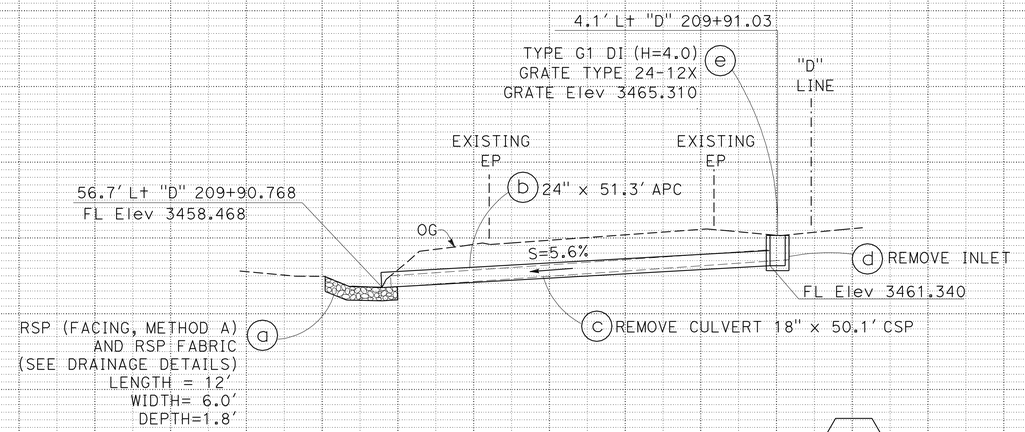

DRAINAGE SYSTEM No. 22

"D" 209+91.03
PM 35.07

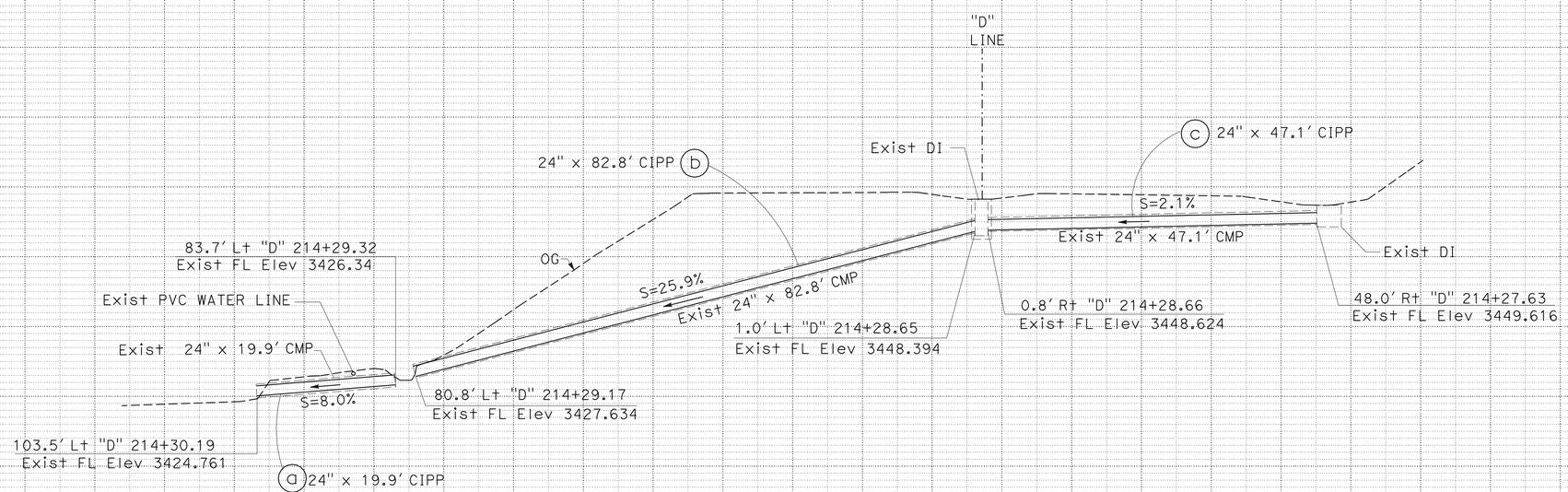

DRAINAGE SYSTEM No. 24

"D" 214+28.680
PM 35.15

DRAINAGE PROFILES

SCALE: 1" = 10' Horiz
1" = 10' Vert

DP-14

REVISED BY | DATE REVISED
JERRY CAGLE | MYHOA TON
CALCULATED-DESIGNED BY | CHECKED BY
FUNCTIONAL SUPERVISOR
JERRY CAGLE

STATE OF CALIFORNIA - DEPARTMENT OF TRANSPORTATION
NORTH REGION
OFFICE OF DESIGN SOUTH
DESIGN BRANCH S2
Caltrans

LAST REVISION 00-00-00 | DATE PLOTTED => 10-MAY-2010 | TIME PLOTTED => 13:31

Dist	COUNTY	ROUTE	POST MILES TOTAL PROJECT	SHEET No.	TOTAL SHEETS
03	ED	50	32.3/39.3	28	67

REGISTERED CIVIL ENGINEER 7-29-09 DATE

5-10-10
PLANS APPROVAL DATE

REGISTERED PROFESSIONAL ENGINEER GERALD R. CAGLE No. 52121 Exp. 12-31-10 CIVIL STATE OF CALIFORNIA

THE STATE OF CALIFORNIA OR ITS OFFICERS OR AGENTS SHALL NOT BE RESPONSIBLE FOR THE ACCURACY OR COMPLETENESS OF SCANNED COPIES OF THIS PLAN SHEET.

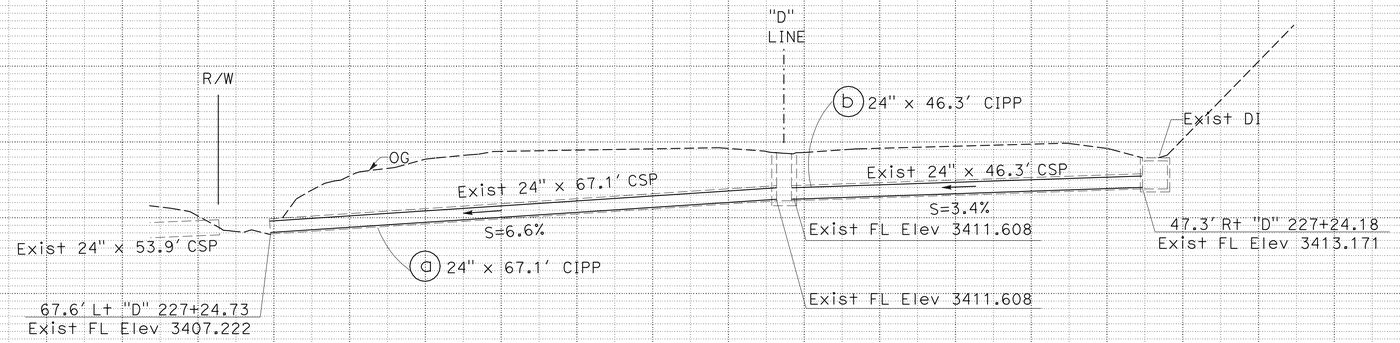

DRAINAGE SYSTEM No. 25

"D" 227+24.406
PM 35.39

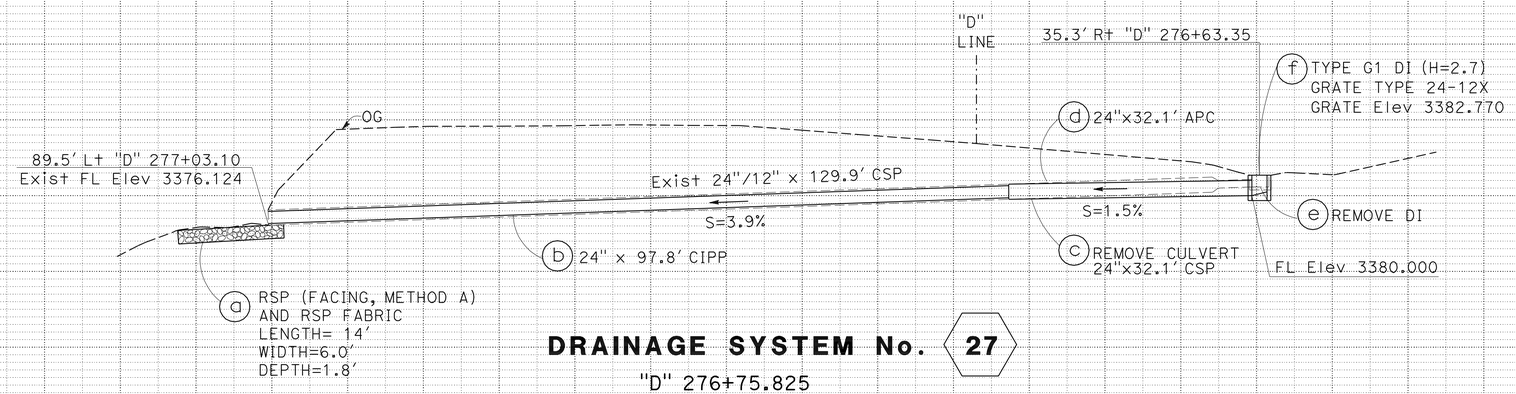

DRAINAGE SYSTEM No. 27

"D" 276+75.825
PM 36.33
SKEW 72.9°

DRAINAGE PROFILES

SCALE: 1" = 10' Horiz
1" = 10' Vert

DP-15

STATE OF CALIFORNIA - DEPARTMENT OF TRANSPORTATION
NORTH REGION
OFFICE OF DESIGN SOUTH
DESIGN BRANCH S2

FUNCTIONAL SUPERVISOR: JERRY CAGLE
CALCULATED-DESIGNED BY: JERRY CAGLE
CHECKED BY: MYHOA TON
REVISED BY / DATE REVISED

LAST REVISION 00-00-00
DATE PLOTTED => 10-MAY-2010
TIME PLOTTED => 13:31

Dist	COUNTY	ROUTE	POST MILES TOTAL PROJECT	SHEET No.	TOTAL SHEETS
03	ED	50	32.3/39.3	29	67

REGISTERED CIVIL ENGINEER 7-29-09 DATE

5-10-10
PLANS APPROVAL DATE

REGISTERED PROFESSIONAL ENGINEER GERALD R. CAGLE No. 52121 Exp. 12-31-10 CIVIL STATE OF CALIFORNIA

THE STATE OF CALIFORNIA OR ITS OFFICERS OR AGENTS SHALL NOT BE RESPONSIBLE FOR THE ACCURACY OR COMPLETENESS OF SCANNED COPIES OF THIS PLAN SHEET.

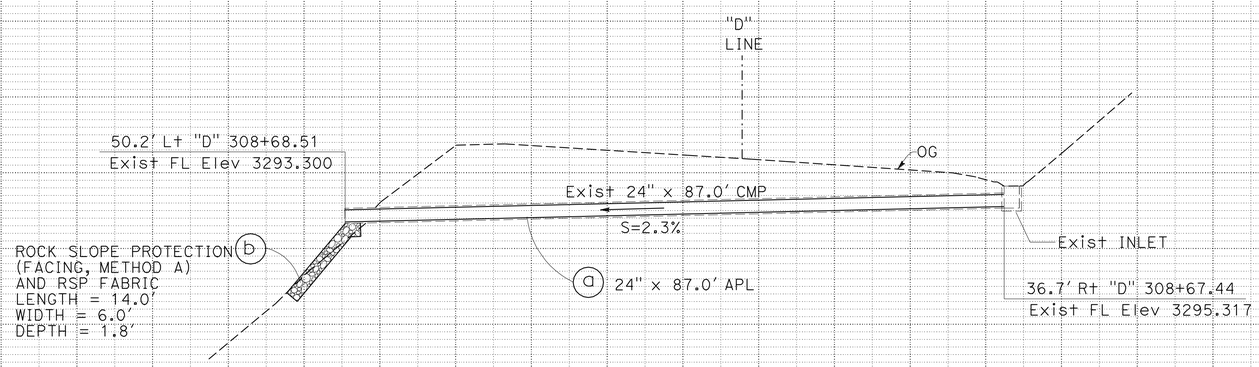

DRAINAGE SYSTEM No. 28

"D" 308+67.915
PM 36.93

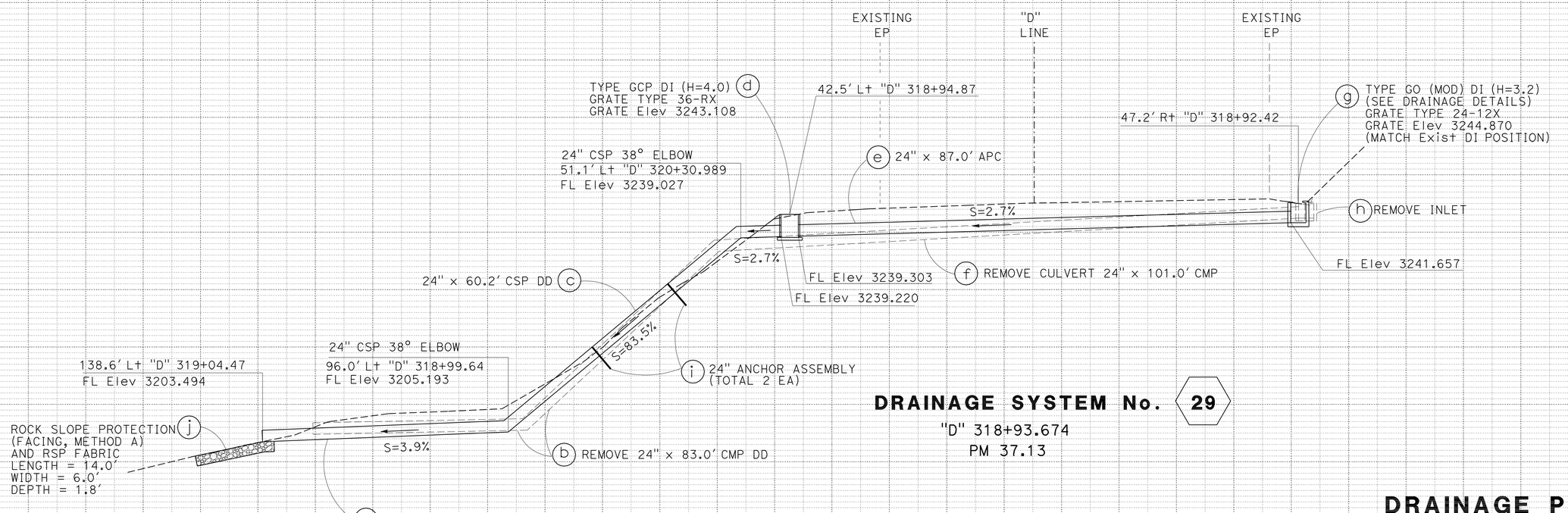

DRAINAGE SYSTEM No. 29

"D" 318+93.674
PM 37.13

DRAINAGE PROFILES

SCALE: 1" = 10' Horiz
1" = 10' Vert

DP-16

REVISED BY | DATE REVISED
JERRY CAGLE | MYHOA TON
CALCULATED-DESIGNED BY | CHECKED BY
FUNCTIONAL SUPERVISOR | JERRY CAGLE
STATE OF CALIFORNIA - DEPARTMENT OF TRANSPORTATION
NORTH REGION
OFFICE OF DESIGN SOUTH
DESIGN BRANCH S2
Caltrans

LAST REVISION 00-00-00 | DATE PLOTTED => 10-MAY-2010 | TIME PLOTTED => 13:31

Dist	COUNTY	ROUTE	POST MILES TOTAL PROJECT	SHEET No.	TOTAL SHEETS
03	ED	50	32.3/39.3	30	67

REGISTERED CIVIL ENGINEER 7-29-09 DATE

5-10-10
PLANS APPROVAL DATE

REGISTERED PROFESSIONAL ENGINEER GERALD R. CAGLE No. 52121 Exp. 12-31-10 CIVIL STATE OF CALIFORNIA

THE STATE OF CALIFORNIA OR ITS OFFICERS OR AGENTS SHALL NOT BE RESPONSIBLE FOR THE ACCURACY OR COMPLETENESS OF SCANNED COPIES OF THIS PLAN SHEET.

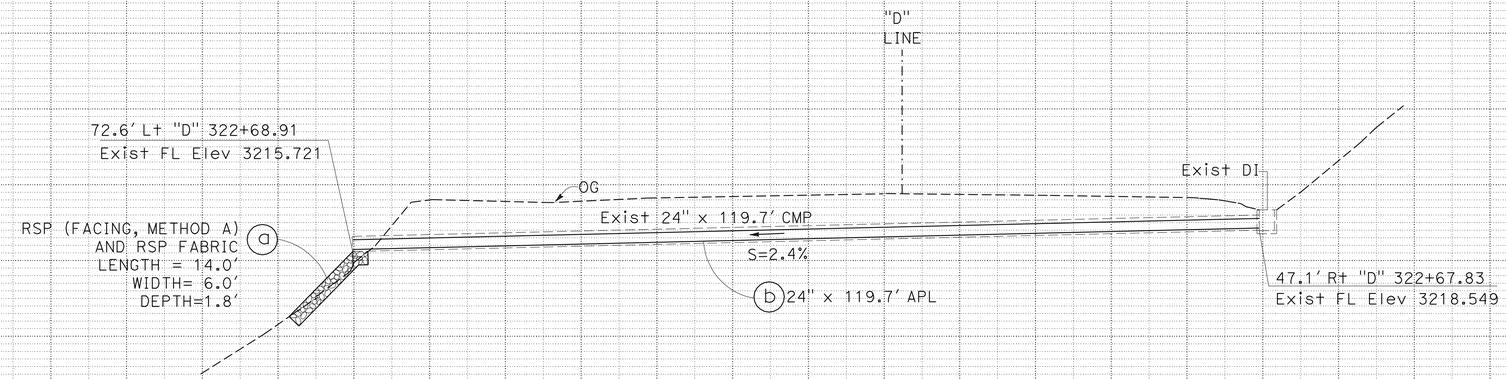

DRAINAGE SYSTEM No. 30

"D" 322+68.254
PM 37.20

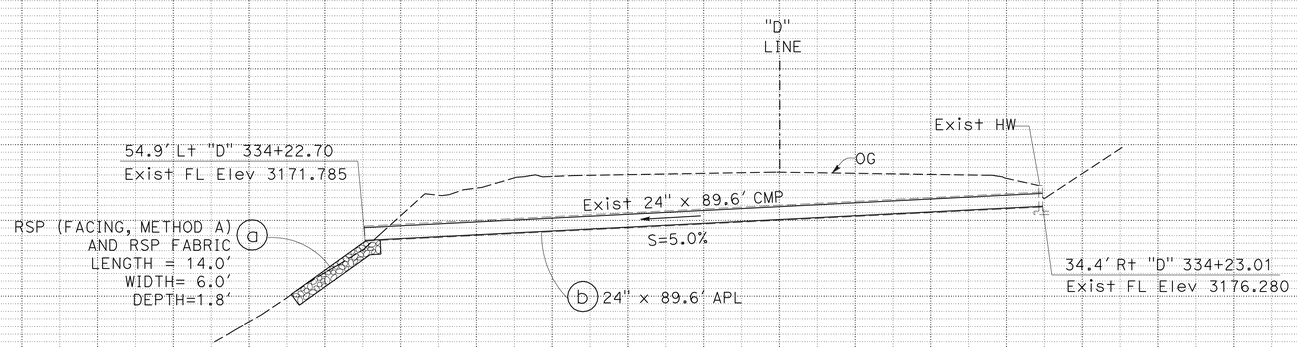

DRAINAGE SYSTEM No. 31

"D" 334+22.698
PM 37.43

DRAINAGE PROFILES

SCALE: 1" = 10' Horiz
1" = 10' Vert

DP-17

REVISED BY | DATE REVISED
JERRY CAGLE | MYHOA TON
CALCULATED-DESIGNED BY | CHECKED BY
FUNCTIONAL SUPERVISOR
JERRY CAGLE

STATE OF CALIFORNIA - DEPARTMENT OF TRANSPORTATION
NORTH REGION
OFFICE OF DESIGN SOUTH
DESIGN BRANCH S2
Caltrans

LAST REVISION 00-00-00 | DATE PLOTTED => 10-MAY-2010 TIME PLOTTED => 13:31

Dist	COUNTY	ROUTE	POST MILES TOTAL PROJECT	SHEET No.	TOTAL SHEETS
03	ED	50	32.3/39.3	31	67

REGISTERED CIVIL ENGINEER 7-29-09 DATE

5-10-10
PLANS APPROVAL DATE

REGISTERED PROFESSIONAL ENGINEER GERALD R. CAGLE No. 52121 Exp. 12-31-10 CIVIL STATE OF CALIFORNIA

THE STATE OF CALIFORNIA OR ITS OFFICERS OR AGENTS SHALL NOT BE RESPONSIBLE FOR THE ACCURACY OR COMPLETENESS OF SCANNED COPIES OF THIS PLAN SHEET.

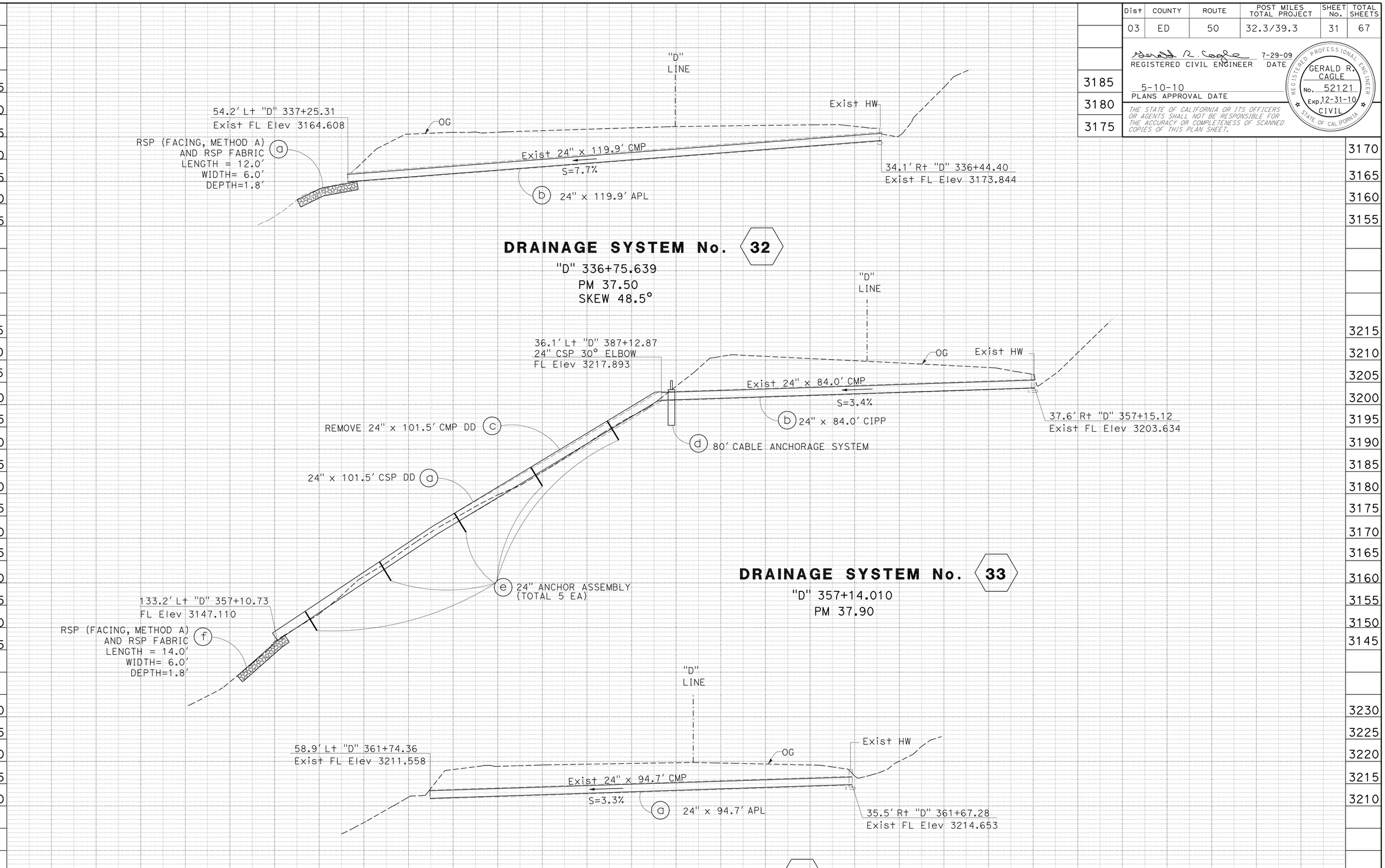

DRAINAGE PROFILES

SCALE: 1" = 10' Horiz
1" = 10' Vert

DP-18

REVISED BY | DATE REVISED
JERRY CAGLE | MYHOA TON
CALCULATED-DESIGNED BY | CHECKED BY
FUNCTIONAL SUPERVISOR: JERRY CAGLE

STATE OF CALIFORNIA - DEPARTMENT OF TRANSPORTATION
NORTH REGION
OFFICE OF DESIGN SOUTH
DESIGN BRANCH S2
Caltrans

LAST REVISION 00-00-00 | DATE PLOTTED => 10-MAY-2010 | TIME PLOTTED => 13:31

Dist	COUNTY	ROUTE	POST MILES TOTAL PROJECT	SHEET No.	TOTAL SHEETS
03	ED	50	32.3/39.3	32	67

REGISTERED CIVIL ENGINEER 7-29-09 DATE

5-10-10
PLANS APPROVAL DATE

REGISTERED PROFESSIONAL ENGINEER GERALD R. CAGLE No. 52121 Exp. 12-31-10 CIVIL STATE OF CALIFORNIA

THE STATE OF CALIFORNIA OR ITS OFFICERS OR AGENTS SHALL NOT BE RESPONSIBLE FOR THE ACCURACY OR COMPLETENESS OF SCANNED COPIES OF THIS PLAN SHEET.

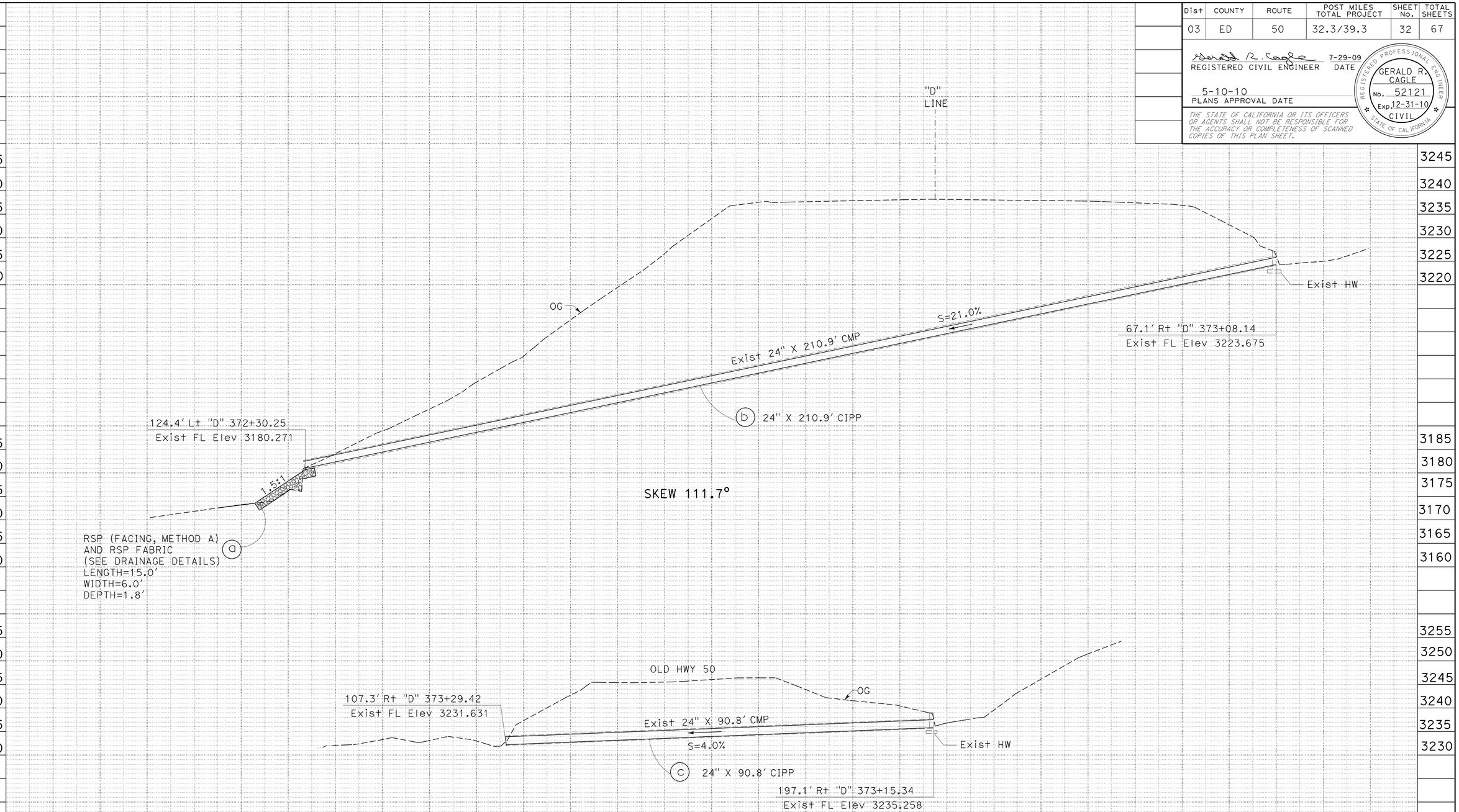

DRAINAGE SYSTEM No. 35

"D" 372+80.846
PM 38.23

DRAINAGE PROFILES

SCALE: 1" = 10' Horiz
1" = 10' Vert

DP-19

STATE OF CALIFORNIA - DEPARTMENT OF TRANSPORTATION
Caltrans
NORTH REGION
OFFICE OF DESIGN SOUTH
DESIGN BRANCH S2

FUNCTIONAL SUPERVISOR: JERRY CAGLE
CALCULATED-DESIGNED BY: JERRY CAGLE
CHECKED BY: MYHOA TON
REVISED BY
DATE REVISED

LAST REVISION 00-00-00 | DATE PLOTTED => 10-MAY-2010 | TIME PLOTTED => 13:31

Dist	COUNTY	ROUTE	POST MILES TOTAL PROJECT	SHEET No.	TOTAL SHEETS
03	ED	50	32.3/39.3	33	67

REGISTERED CIVIL ENGINEER 7-29-09 DATE

5-10-10
PLANS APPROVAL DATE

REGISTERED PROFESSIONAL ENGINEER GERALD R. CAGLE No. 52121 Exp. 12-31-10 CIVIL STATE OF CALIFORNIA

THE STATE OF CALIFORNIA OR ITS OFFICERS OR AGENTS SHALL NOT BE RESPONSIBLE FOR THE ACCURACY OR COMPLETENESS OF SCANNED COPIES OF THIS PLAN SHEET.

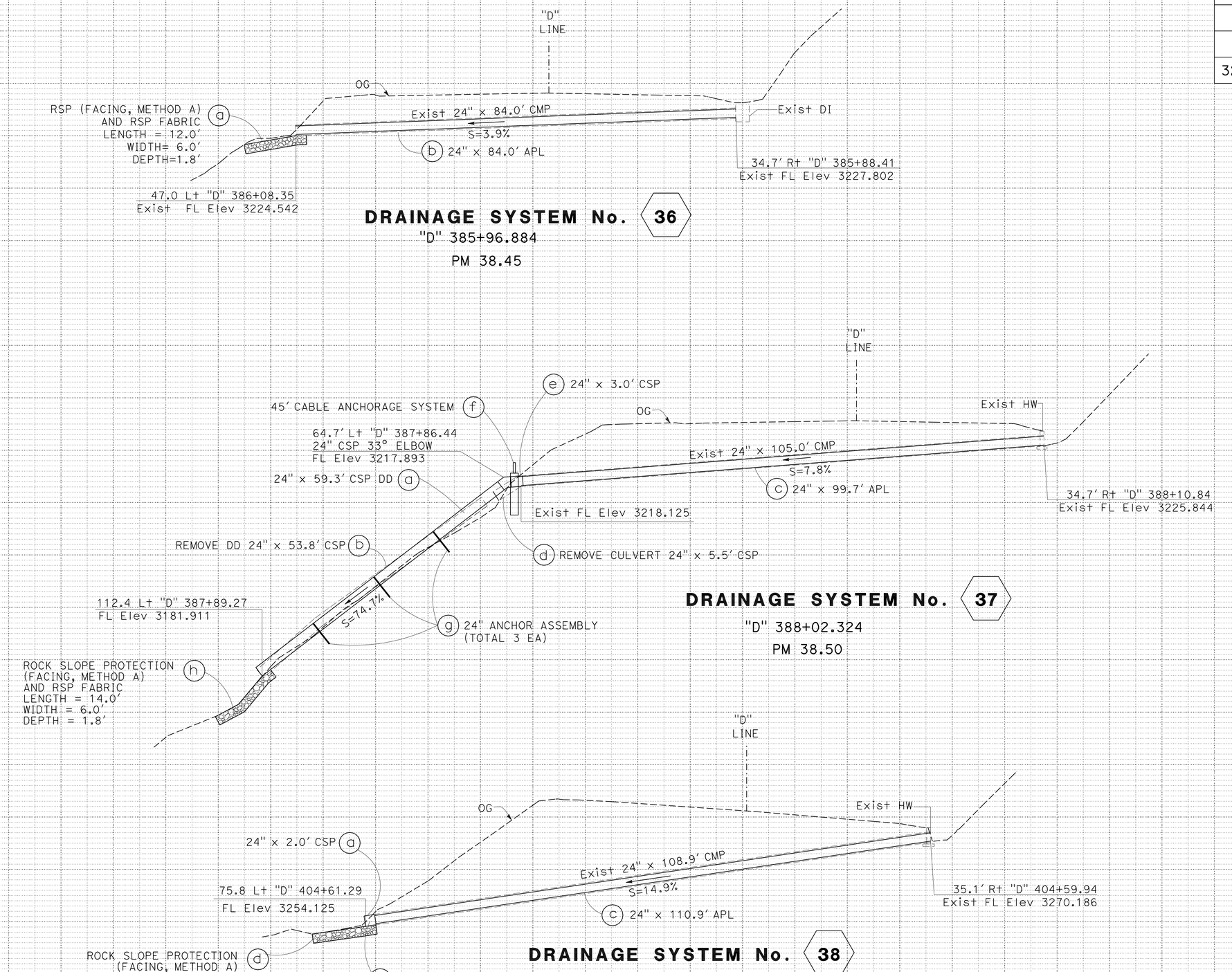

DRAINAGE PROFILES

SCALE: 1" = 10' Horiz
1" = 10' Vert

DP-20

STATE OF CALIFORNIA - DEPARTMENT OF TRANSPORTATION
Caltrans
NORTH REGION
OFFICE OF DESIGN SOUTH
DESIGN BRANCH S2

FUNCTIONAL SUPERVISOR: JERRY CAGLE
CALCULATED-DESIGNED BY: JERRY CAGLE
CHECKED BY: MYHOA TON
REVISED BY / DATE REVISED

LAST REVISION 00-00-00 | DATE PLOTTED => 10-MAY-2010 | TIME PLOTTED => 13:31

Dist	COUNTY	ROUTE	POST MILES TOTAL PROJECT	SHEET No.	TOTAL SHEETS
03	ED	50	32.3/39.3	34	67

REGISTERED CIVIL ENGINEER 7-29-09 DATE

5-10-10
PLANS APPROVAL DATE

REGISTERED PROFESSIONAL ENGINEER GERALD R. CAGLE No. 52121 Exp. 12-31-10 CIVIL STATE OF CALIFORNIA

THE STATE OF CALIFORNIA OR ITS OFFICERS OR AGENTS SHALL NOT BE RESPONSIBLE FOR THE ACCURACY OR COMPLETENESS OF SCANNED COPIES OF THIS PLAN SHEET.

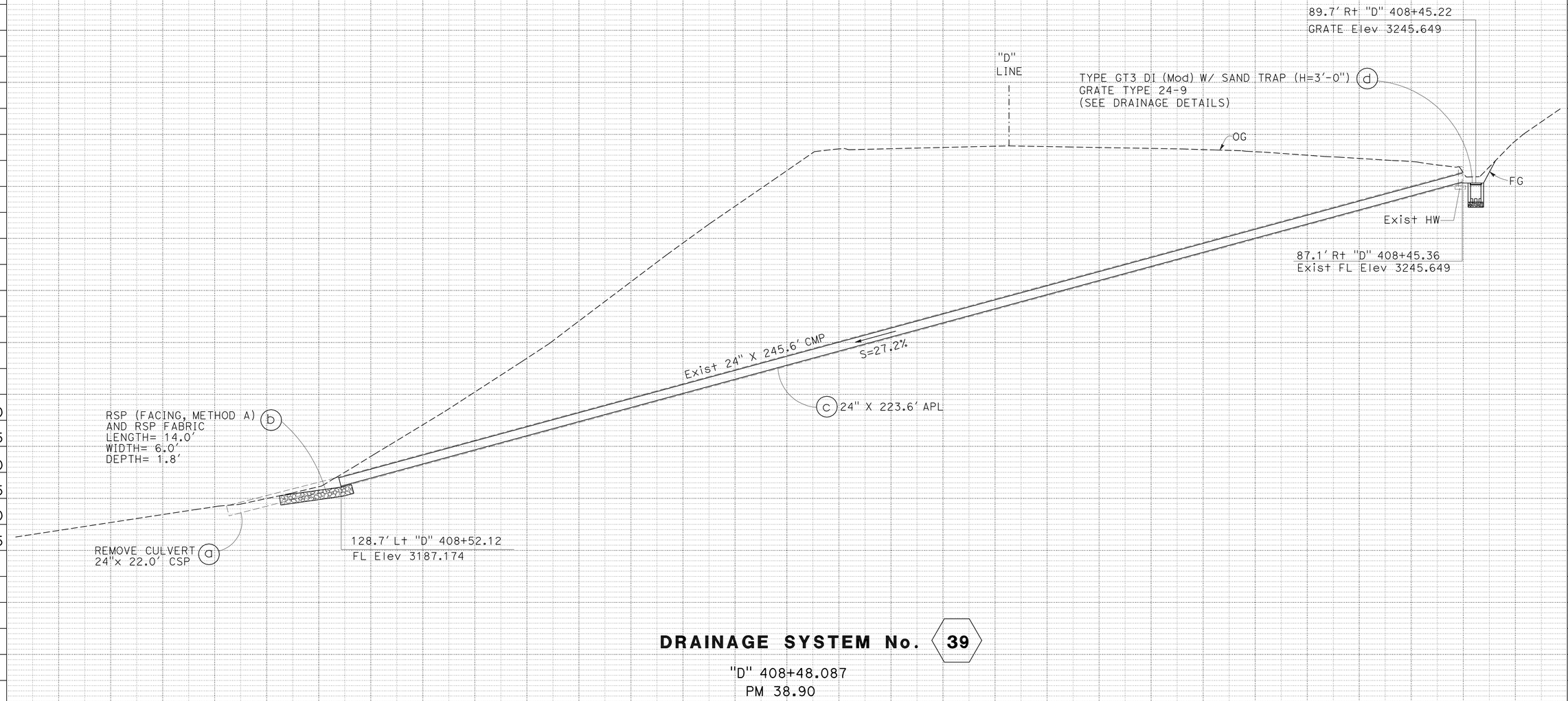

DRAINAGE SYSTEM No. 39

"D" 408+48.087
PM 38.90

DRAINAGE PROFILES

SCALE: 1" = 10' Horiz
1" = 10' Vert

DP-21

REVISED BY | DATE REVISED
JERRY CAGLE | MYHOA TON
CALCULATED-DESIGNED BY | CHECKED BY
FUNCTIONAL SUPERVISOR: JERRY CAGLE

STATE OF CALIFORNIA - DEPARTMENT OF TRANSPORTATION
Caltrans
NORTH REGION
OFFICE OF DESIGN SOUTH
DESIGN BRANCH S2

LAST REVISION 00-00-00 | DATE PLOTTED => 10-MAY-2010 | TIME PLOTTED => 13:32

Dist	COUNTY	ROUTE	POST MILES TOTAL PROJECT	SHEET No.	TOTAL SHEETS
03	ED	50	32.3/39.3	35	67

REGISTERED CIVIL ENGINEER 7-29-09 DATE

5-10-10
PLANS APPROVAL DATE

REGISTERED PROFESSIONAL ENGINEER
GERALD R. CAGLE
No. 52121
Exp. 12-31-10
CIVIL
STATE OF CALIFORNIA

THE STATE OF CALIFORNIA OR ITS OFFICERS OR AGENTS SHALL NOT BE RESPONSIBLE FOR THE ACCURACY OR COMPLETENESS OF SCANNED COPIES OF THIS PLAN SHEET.

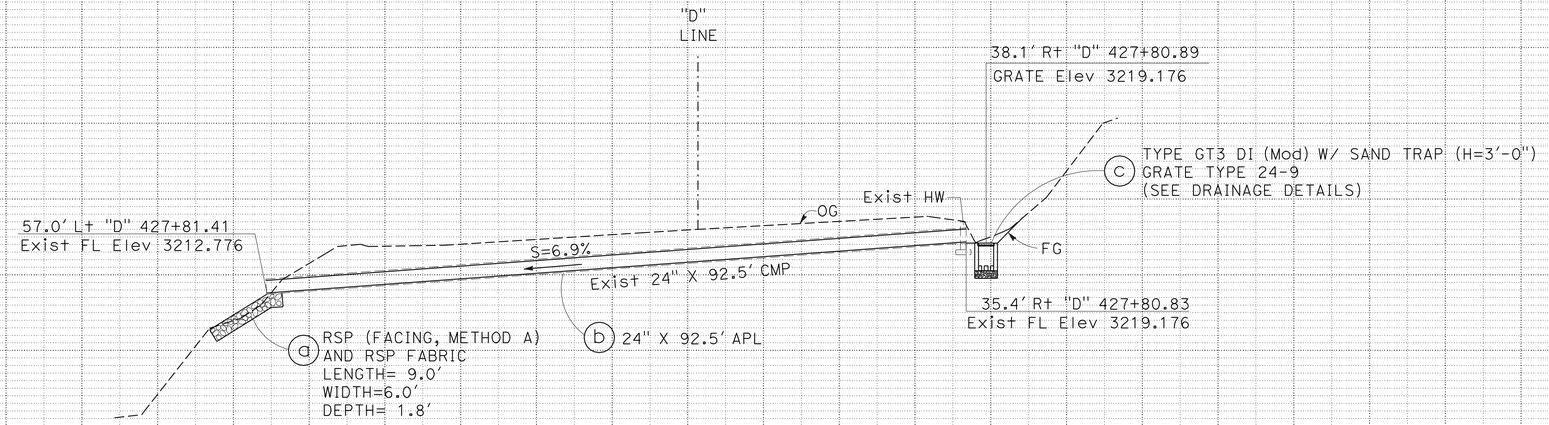

DRAINAGE SYSTEM No. 40

"D" 427+81.042
PM 39.25

DRAINAGE PROFILES

SCALE: 1" = 10' Horiz
1" = 10' Vert

DP-22

STATE OF CALIFORNIA - DEPARTMENT OF TRANSPORTATION
NORTH REGION
OFFICE OF DESIGN SOUTH
DESIGN BRANCH S2

FUNCTIONAL SUPERVISOR: JERRY CAGLE
CALCULATED-DESIGNED BY: JERRY CAGLE
CHECKED BY: MYHOA TON
REVISED BY
DATE REVISED

LAST REVISION 00-00-00
DATE PLOTTED => 10-MAY-2010
TIME PLOTTED => 13:32

Dist	COUNTY	ROUTE	POST MILES TOTAL PROJECT	SHEET No.	TOTAL SHEETS
03	ED	50	32.3/39.3	36	67

REGISTERED CIVIL ENGINEER 7-29-09 DATE

5-10-10
PLANS APPROVAL DATE

REGISTERED PROFESSIONAL ENGINEER GERALD R. CAGLE No. 52121 Exp. 12-31-10 CIVIL STATE OF CALIFORNIA

THE STATE OF CALIFORNIA OR ITS OFFICERS OR AGENTS SHALL NOT BE RESPONSIBLE FOR THE ACCURACY OR COMPLETENESS OF SCANNED COPIES OF THIS PLAN SHEET.

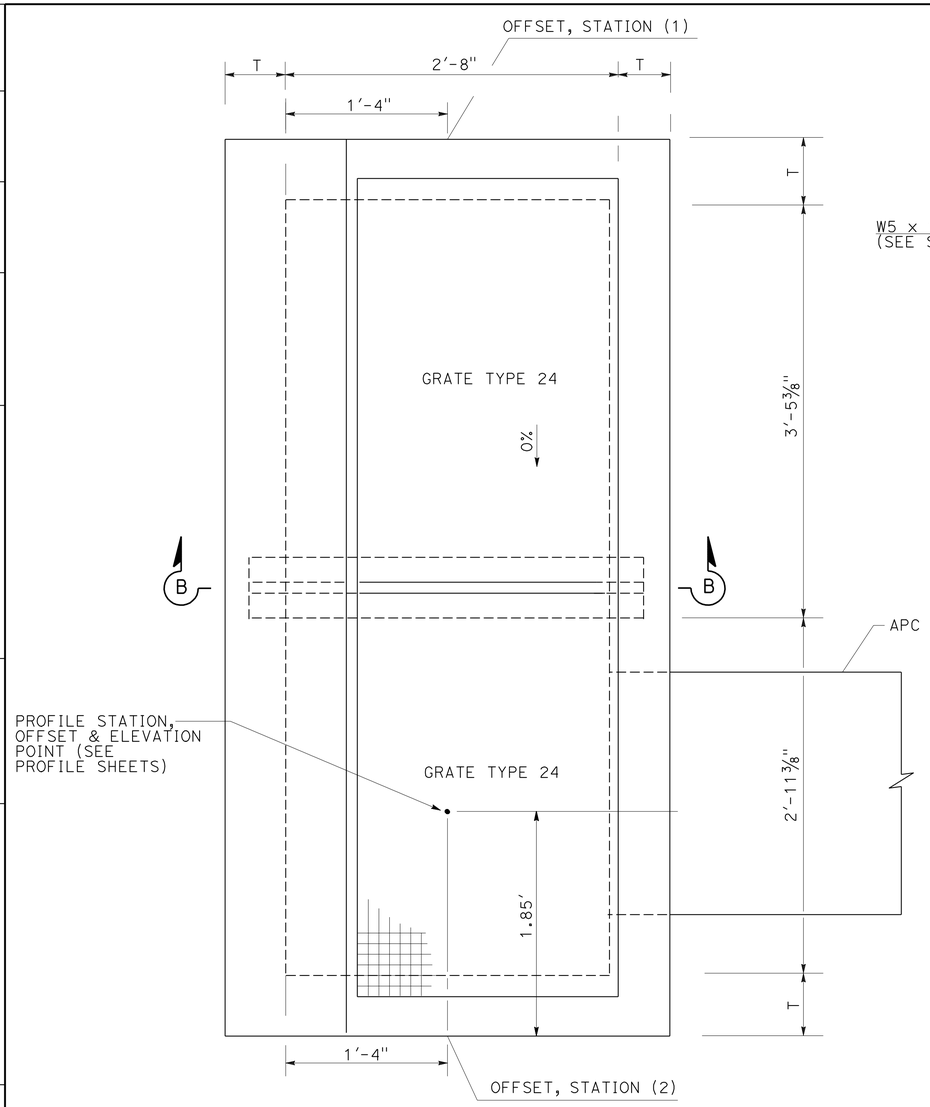

PLAN
DI (TYPE GO Mod)
SEE Std PLAN D74B FOR DETAILS NOT SHOWN

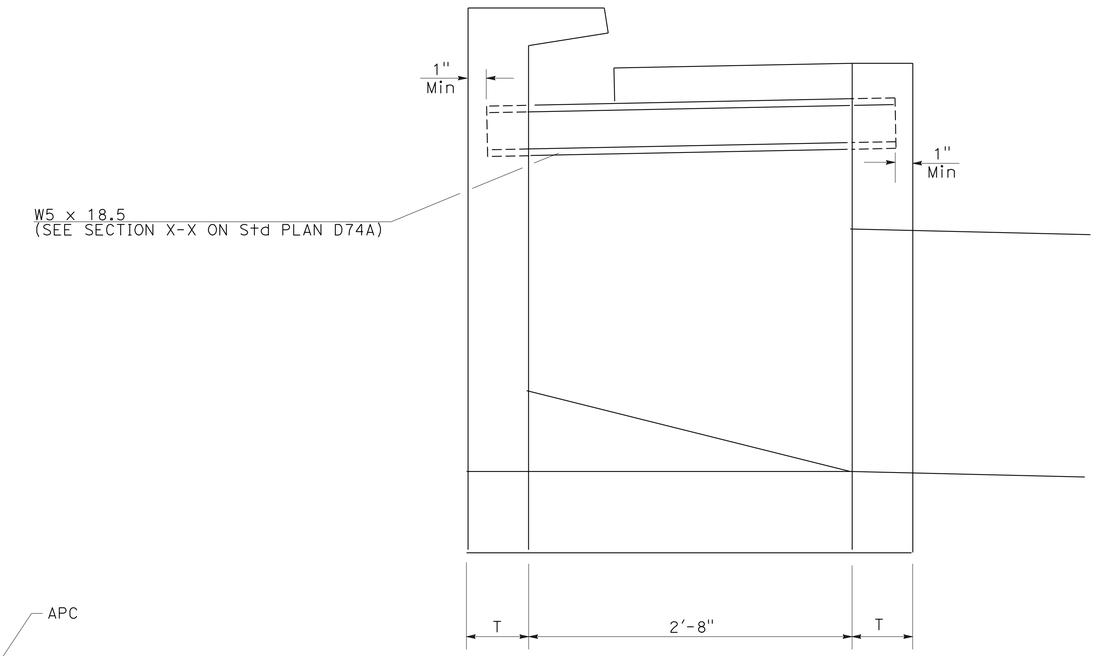

SECTION B-B

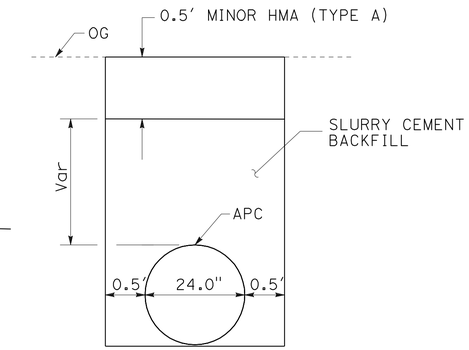

TRENCH BACKFILL
FOR CULVERTS UNDER LANE OR SHOULDER

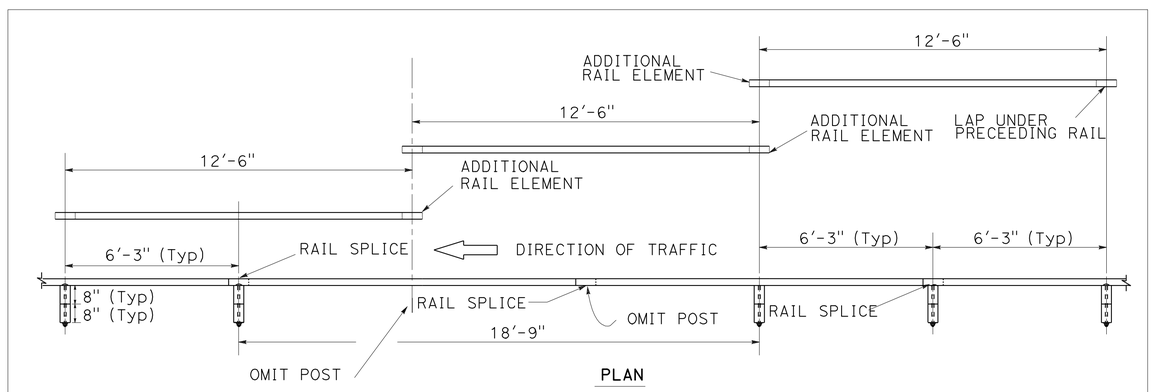

PLAN

3-RAIL NESTED MBGR ELEMENT (TWO POSTS OMITTED)

DRAINAGE SYSTEM	OFFSET STATION (1)	OFFSET STATION (2)	*ELEVATION (Ft)
4 h	28.4' Rt "D" 96+55.27	29.3' Rt "D" 96+62.93	4036.747
5 e	30.7' Rt "D" 101+03.91	30.2' Rt "D" 101+11.65	4011.522
7 g	24.6' Rt "D" 104+49.84	24.6' Rt "D" 104+57.05	3993.403
14 h	25.4' Rt "D" 104+85.08	26.4' Rt "D" 104+92.42	3785.736
29 g	46.8' Rt "D" 318+87.15	46.9' Rt "D" 318+94.55	3244.870

*STATION (1) = STATION (2)

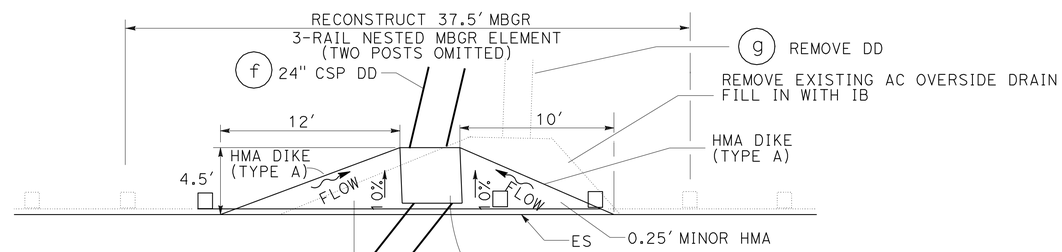

PLAN
DRAINAGE SYSTEM No. 11 i

DRAINAGE DETAILS
NO SCALE

DD-1

STATE OF CALIFORNIA - DEPARTMENT OF TRANSPORTATION
NORTH REGION
OFFICE OF DESIGN SOUTH
DESIGN BRANCH S2

FUNCTIONAL SUPERVISOR: GILBERT OGAZ
CALCULATED-DESIGNED BY: JERRY CAGLE
CHECKED BY: MYHOA TON
REVISED BY
DATE REVISED

LAST REVISION 00-00-00
DATE PLOTTED => 10-MAY-2010
TIME PLOTTED => 11:28

Dist	COUNTY	ROUTE	POST MILES TOTAL PROJECT	SHEET No.	TOTAL SHEETS
03	ED	50	32.3/39.3	37	67

REGISTERED CIVIL ENGINEER 7-29-09 DATE

5-10-10
PLANS APPROVAL DATE

REGISTERED PROFESSIONAL ENGINEER GERALD R. CAGLE No. 52121 Exp. 12-31-10 CIVIL STATE OF CALIFORNIA

THE STATE OF CALIFORNIA OR ITS OFFICERS OR AGENTS SHALL NOT BE RESPONSIBLE FOR THE ACCURACY OR COMPLETENESS OF SCANNED COPIES OF THIS PLAN SHEET.

NOTE: SEE DRAINAGE PLANS AND PROFILES FOR DETAILS NOT SHOWN.

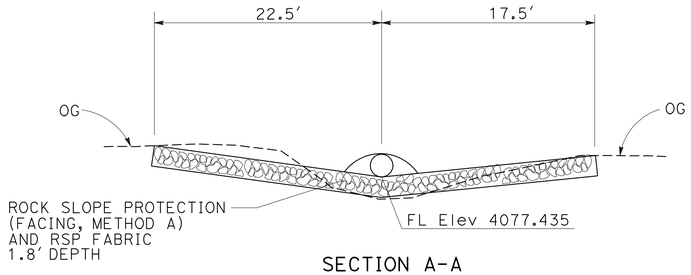

SECTION A-A

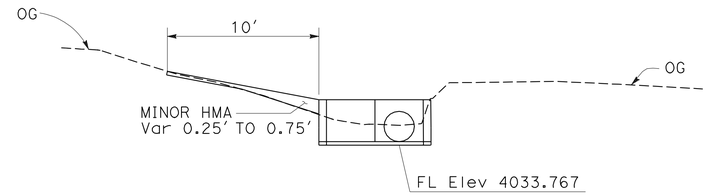

SECTION B-B

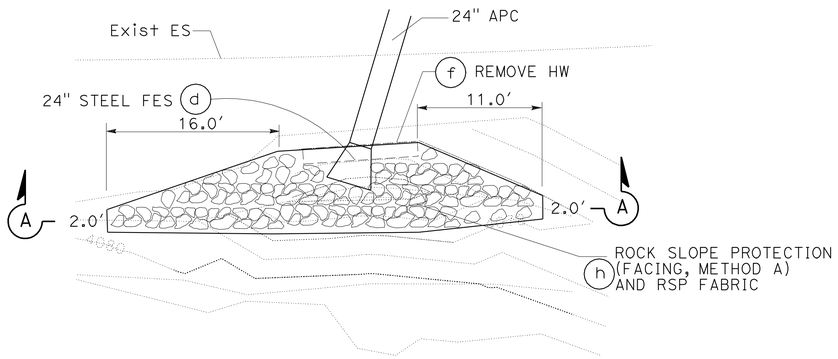

DRAINAGE SYSTEM No. 2

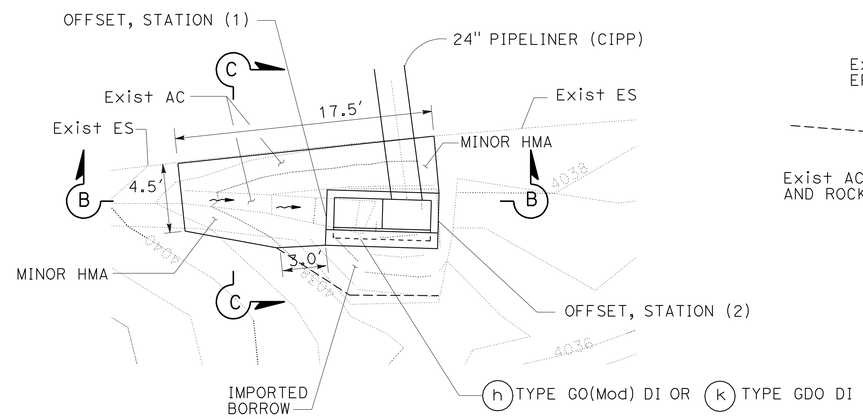

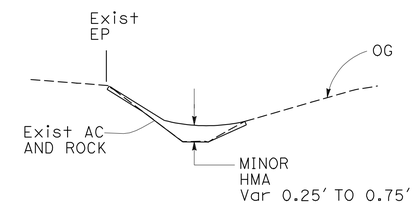

SECTION C-C

DRAINAGE SYSTEM No. 4 h
12 k

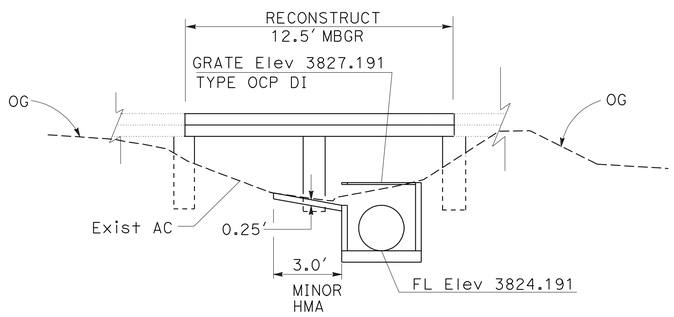

SECTION D-D

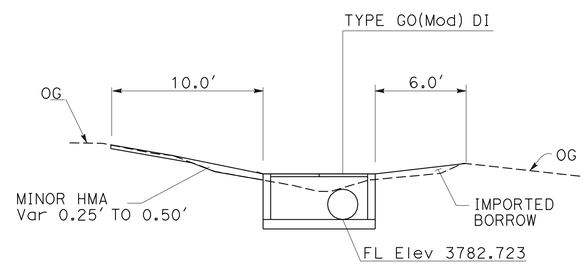

SECTION E-E

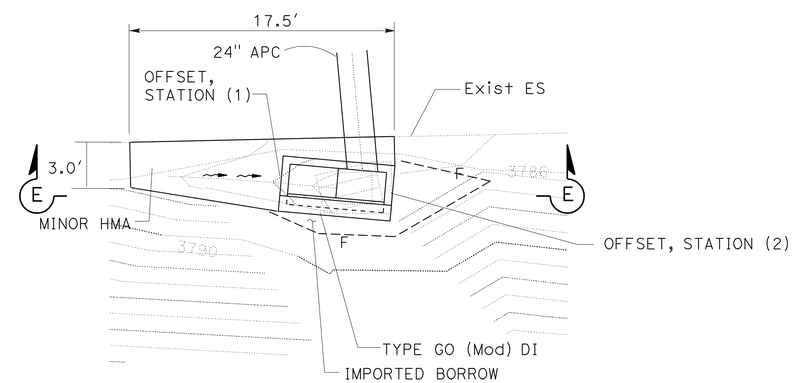

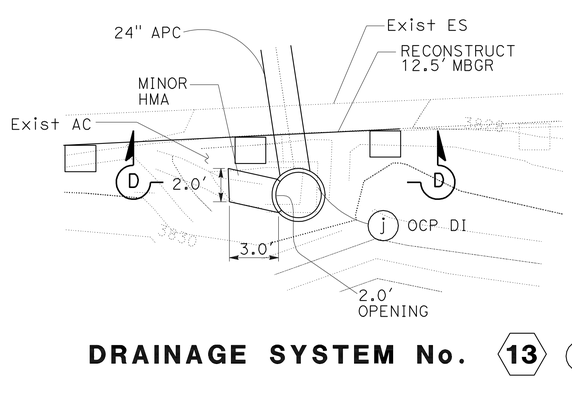

DRAINAGE SYSTEM No. 13 j

DRAINAGE SYSTEM No. 14 h
7 g

DRAINAGE DETAILS

NO SCALE

DD-2

STATE OF CALIFORNIA - DEPARTMENT OF TRANSPORTATION
Caltrans
NORTH REGION
OFFICE OF DESIGN SOUTH
DESIGN BRANCH S2

FUNCTIONAL SUPERVISOR: GILBERT OGAZ
CALCULATED-DESIGNED BY: JERRY CAGLE
CHECKED BY: MYHOA TON
REVISED BY
DATE REVISED

LAST REVISION 00-00-00
DATE PLOTTED => 10-MAY-2010
TIME PLOTTED => 11:29

Dist	COUNTY	ROUTE	POST MILES TOTAL PROJECT	SHEET No.	TOTAL SHEETS
03	ED	50	32.3/39.3	38	67

REGISTERED CIVIL ENGINEER 7-29-09 DATE

5-10-10
PLANS APPROVAL DATE

REGISTERED PROFESSIONAL ENGINEER GERALD R. CAGLE No. 52121 Exp. 12-31-10 CIVIL STATE OF CALIFORNIA

THE STATE OF CALIFORNIA OR ITS OFFICERS OR AGENTS SHALL NOT BE RESPONSIBLE FOR THE ACCURACY OR COMPLETENESS OF SCANNED COPIES OF THIS PLAN SHEET.

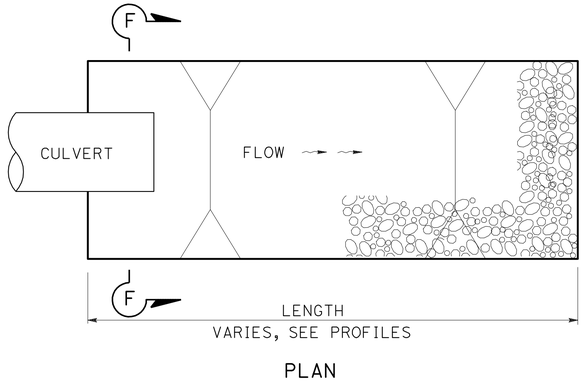

PLAN

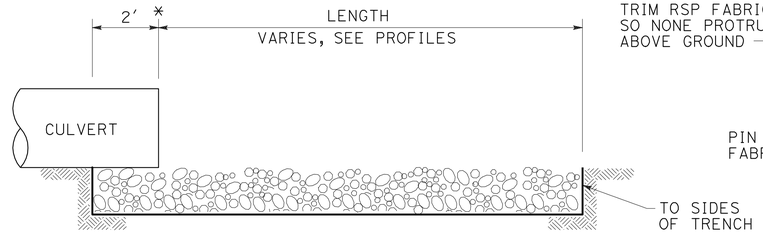

PROFILE

* FOR CULVERT INLET, RSP BEGIN AT FRONT OF FLARED END SECTION

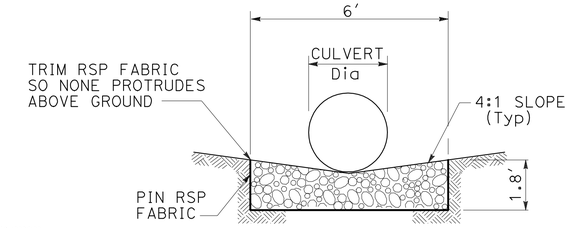

SECTION F-F

ROCK ENERGY DISSIPATOR AT CULVERT OUTLET

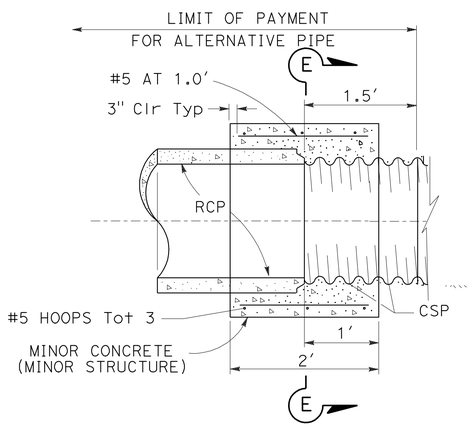

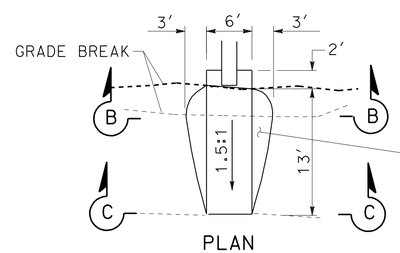

PLAN

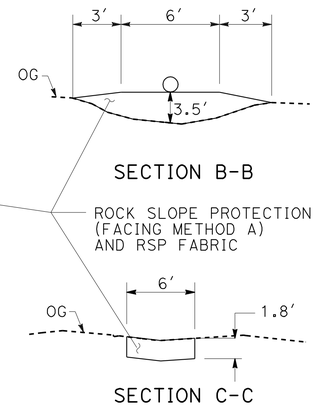

SECTION B-B

SECTION C-C

DRAINAGE SYSTEM No. 35 a

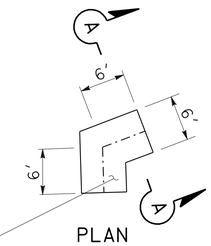

PLAN

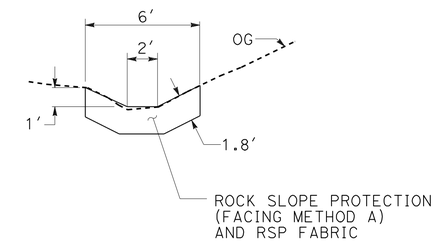

SECTION A-A

DRAINAGE SYSTEM No. 22 a

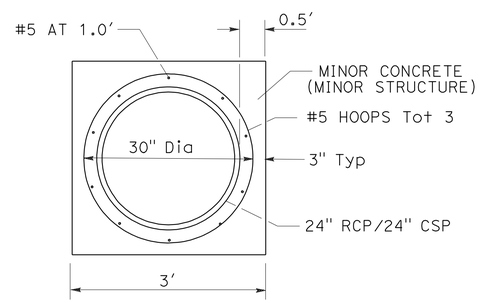

SECTION E-E

REINFORCED CONCRETE COLLAR CSP CONNECTION TO RCP

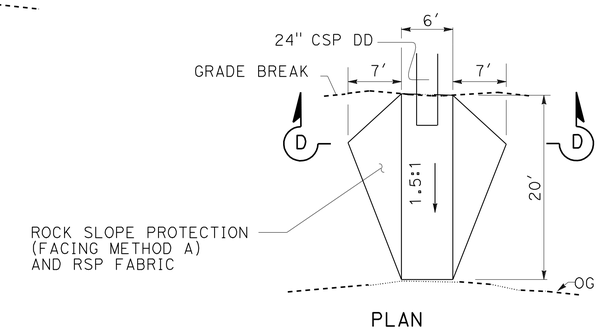

PLAN

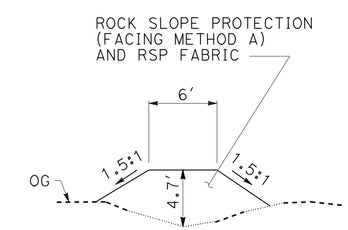

SECTION D-D

DRAINAGE SYSTEM No. 12 a

ROCK SLOPE PROTECTION DETAILS

DRAINAGE DETAILS

NO SCALE

DD-3

STATE OF CALIFORNIA - DEPARTMENT OF TRANSPORTATION
NORTH REGION
OFFICE OF DESIGN SOUTH
DESIGN BRANCH S2

FUNCTIONAL SUPERVISOR: GILBERT OGAZ
CALCULATED-DESIGNED BY: JERRY CAGLE
CHECKED BY: MYHOA TON
REVISED BY
DATE REVISED

LAST REVISION 00-00-00
DATE PLOTTED => 10-MAY-2010
TIME PLOTTED => 11:10

Dist	COUNTY	ROUTE	POST MILES TOTAL PROJECT	SHEET No.	TOTAL SHEETS
03	ED	50	32.3/39.3	39	67

REGISTERED CIVIL ENGINEER 7-29-09 DATE

5-10-10
PLANS APPROVAL DATE

REGISTERED PROFESSIONAL ENGINEER SCOTT A. LEE No. 66936 Exp. 9-30-10 CIVIL STATE OF CALIFORNIA

THE STATE OF CALIFORNIA OR ITS OFFICERS OR AGENTS SHALL NOT BE RESPONSIBLE FOR THE ACCURACY OR COMPLETENESS OF SCANNED COPIES OF THIS PLAN SHEET.

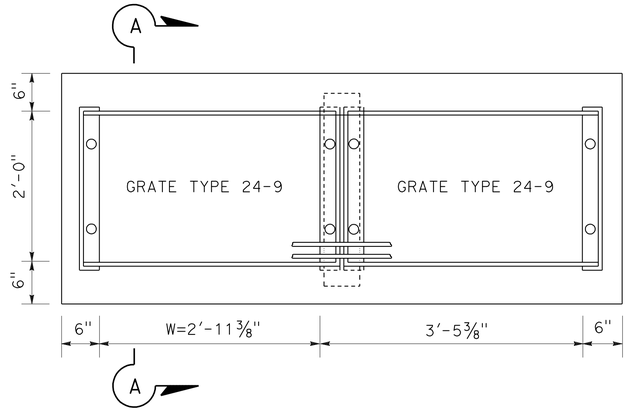

PLAN

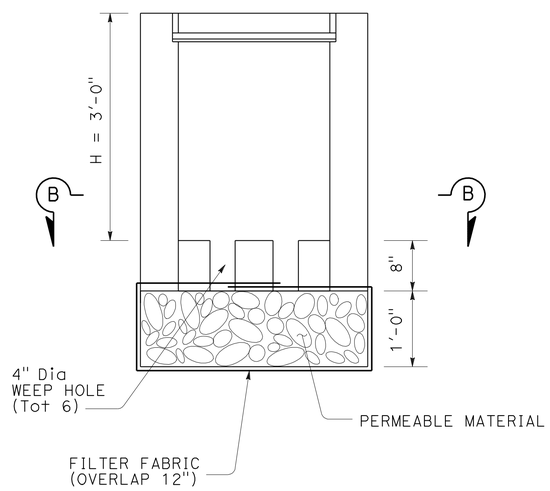

SECTION A-A

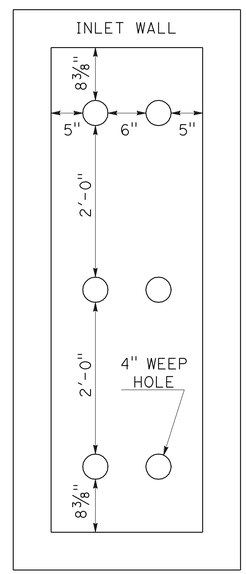

SECTION B-B

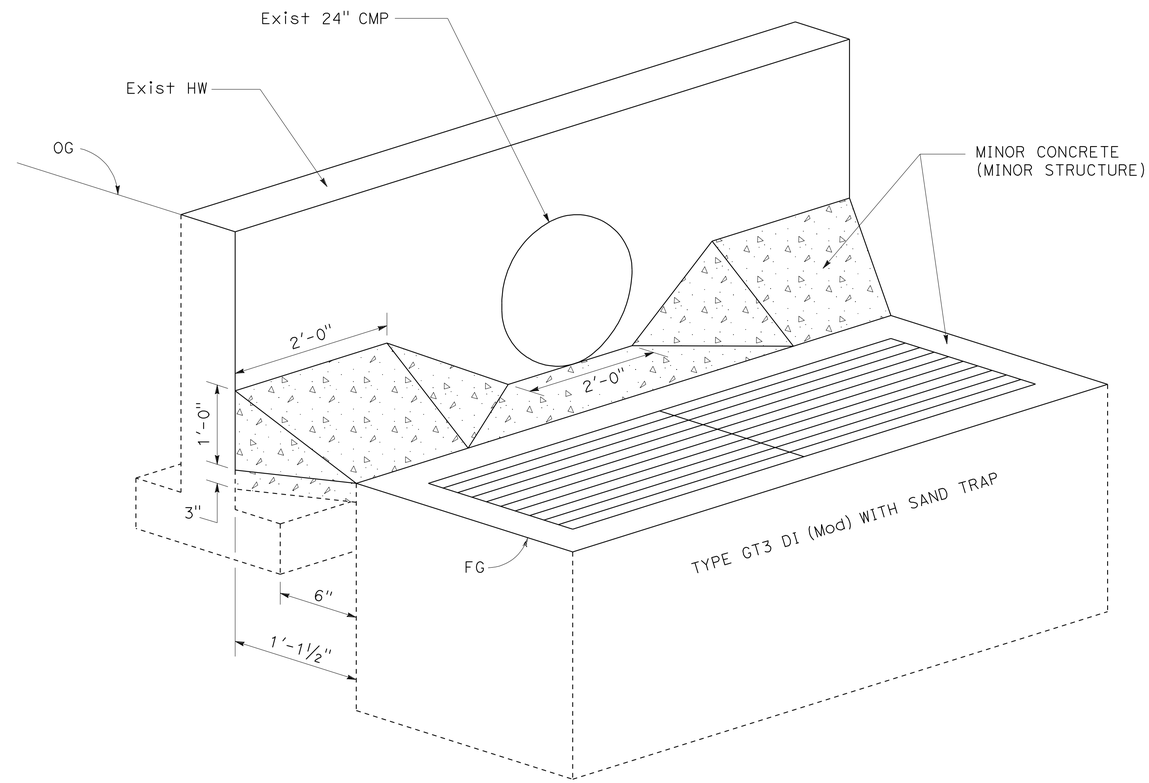

NOTE: SEE SHEET DD-5 FOR ADDITIONAL DETAILS.

TYPE GT3 DI (Mod) WITH SAND TRAP

(FOR DETAILS NOT SHOWN, SEE Std PLAN D74A AND REVISED Std PLAN D77A)

39 d 40 c

DRAINAGE DETAILS

NO SCALE

DD-4

STATE OF CALIFORNIA - DEPARTMENT OF TRANSPORTATION
NORTH REGION
OFFICE OF DESIGN SOUTH
DESIGN BRANCH S2

FUNCTIONAL SUPERVISOR: GILBERT OGAZ
CALCULATED-DESIGNED BY: SCOTT LEE
CHECKED BY: JERRY CAGLE
REVISED BY
DATE REVISED

LAST REVISION 00-00-00 DATE PLOTTED => 10-MAY-2010 TIME PLOTTED => 10:53

Dist	COUNTY	ROUTE	POST MILES TOTAL PROJECT	SHEET No.	TOTAL SHEETS
03	ED	50	32.3/39.3	40	67

REGISTERED CIVIL ENGINEER 7-29-09 DATE

5-10-10
PLANS APPROVAL DATE

REGISTERED PROFESSIONAL ENGINEER SCOTT A. LEE No. 66936 Exp. 9-30-10 CIVIL STATE OF CALIFORNIA

THE STATE OF CALIFORNIA OR ITS OFFICERS OR AGENTS SHALL NOT BE RESPONSIBLE FOR THE ACCURACY OR COMPLETENESS OF SCANNED COPIES OF THIS PLAN SHEET.

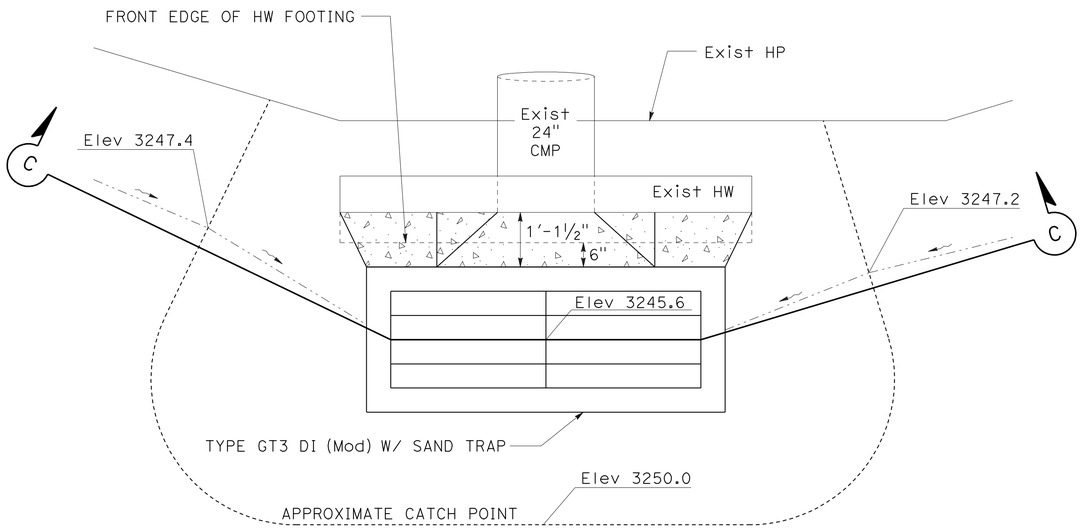

PLAN

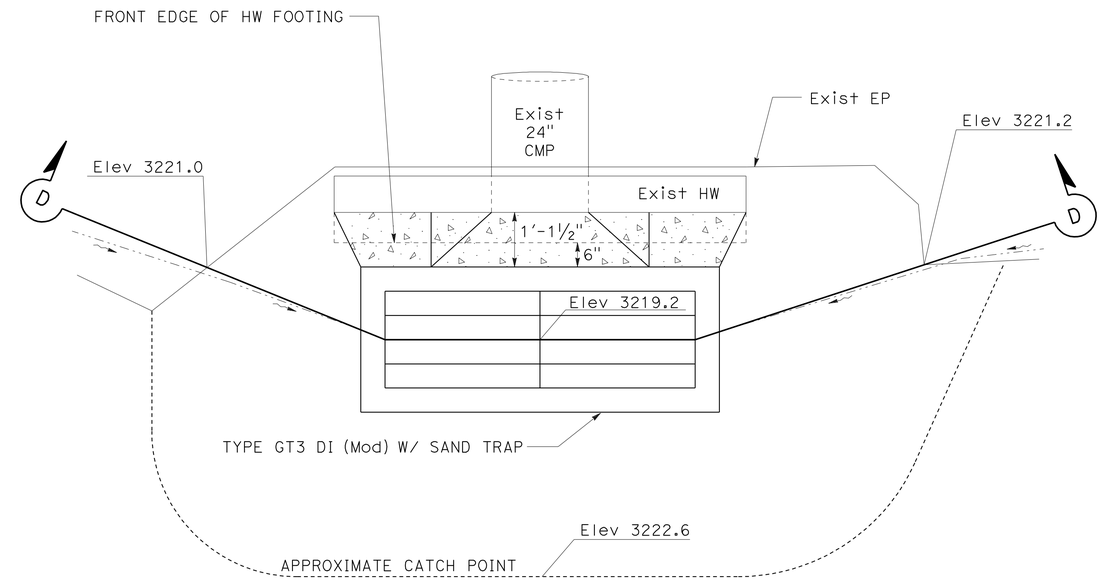

PLAN

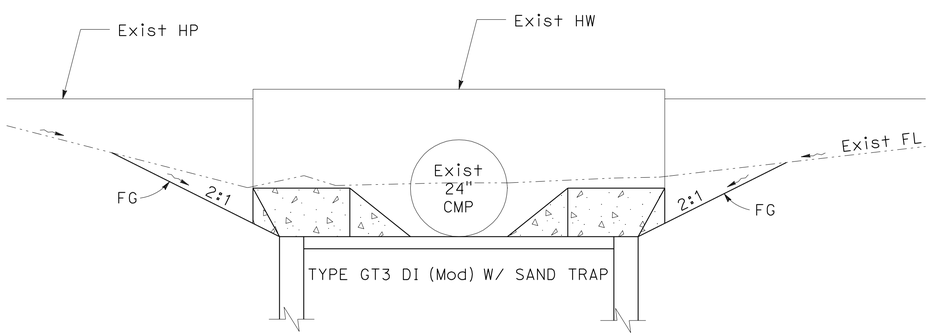

SECTION C-C

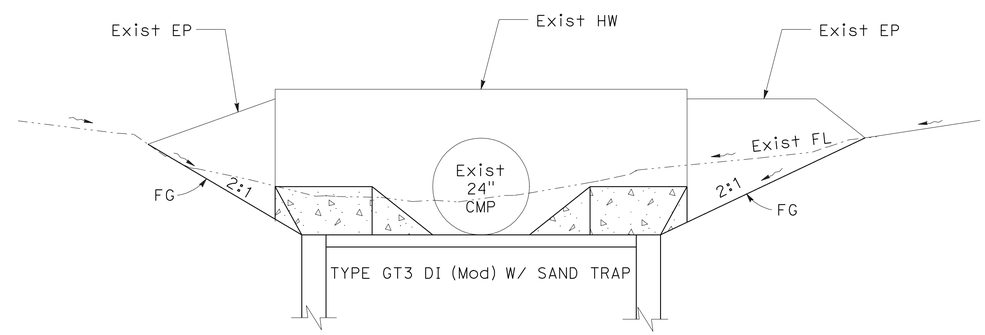

SECTION D-D

39 d

TYPE GT3 DI (Mod) WITH SAND TRAP

40 c

DRAINAGE DETAILS
NO SCALE

DD-5

STATE OF CALIFORNIA - DEPARTMENT OF TRANSPORTATION
NORTH REGION
OFFICE OF DESIGN SOUTH
DESIGN BRANCH S2

FUNCTIONAL SUPERVISOR: GILBERT OGAZ
CALCULATED-DESIGNED BY: SCOTT LEE
CHECKED BY: JERRY CAGLE
REVISED BY / DATE REVISED

LAST REVISION 00-00-00
DATE PLOTTED => 10-MAY-2010
TIME PLOTTED => 10:53

Dist	COUNTY	ROUTE	POST MILES TOTAL PROJECT	SHEET No.	TOTAL SHEETS
03	ED	50	32.3/39.3	41	67

REGISTERED CIVIL ENGINEER 7-29-09 DATE

5-10-10
PLANS APPROVAL DATE

REGISTERED PROFESSIONAL ENGINEER GERALD R. CAGLE No. 52121 Exp. 12-31-10 CIVIL STATE OF CALIFORNIA

THE STATE OF CALIFORNIA OR ITS OFFICERS OR AGENTS SHALL NOT BE RESPONSIBLE FOR THE ACCURACY OR COMPLETENESS OF SCANNED COPIES OF THIS PLAN SHEET.

ALTERNATIVE PIPE CULVERTS

	REINFORCED CONCRETE PIPE	CORRUGATED STEEL PIPE
24" ALTERNATIVE CULVERT	X	X

ALTERNATIVE PIPELINERS

	CIPP	20" PLASTIC PIPELINER
24" ALTERNATIVE PIPELINER	X	X

DRAINAGE ITEMS

			DRAINAGE INLET									PIPELINER			CULVERT					(N)	DOWNDRAINS				FES		RSP				
DRAINAGE PLAN SHEET No.	DRAINAGE SYSTEM No.	DRAINAGE UNIT	36" CORRUGATED STEEL PIPE INLET (0.138" THICK)	REMOVE INLET	(N) INLET TYPE	(N) FRAME AND GRATE TYPE	(N) HEIGHT OF INLET "H"	(N) LADDER	MINOR CONCRETE (MINOR STRUCTURE)	MISCELLANEOUS IRON AND STEEL	PERMEABLE MATERIAL	18" CURED-IN-PLACE PIPELINER	24" CURED-IN-PLACE PIPELINER	24" ALTERNATIVE PIPELINER	REMOVE CULVERT	ABANDON CULVERT	REMOVE HEADWALL	24" CSP (0.138" THICK)	24" ALTERNATIVE PIPE CULVERT	ELBOW	REMOVE DOWNDRAIN	24" CSP DOWNDRAIN (0.138" THICK)	24" ANCHOR ASSEMBLY	CABLE ANCHORAGE SYSTEM	REMOVE FES	24" STEEL FES	RSP (FACING, METHOD A)	RSP FABRIC	DESCRIPTION	DRAINAGE UNIT	DRAINAGE SYSTEM No.
			LF	EA	EA	EA	FT-IN	EA	CY	LB	CY	LF	LF	LF	LF	LF	EA	LF	LF	EA	LF	LF	EA	LF	EA	EA	CY	SQYD			
D-1	1	a										66.0																	18" CIPP	a	1
	2	a																									5.6	18.8		a	2
		b																				21.0								b	
		c																	67.0	1									30° ELBOW	c	
		d																								1				d	
		e														86.5													24" CSP	e	
		f															1													f	
		g																					1							g	
		h																									13.3	38.9	RSP-INLET	h	
		i													5.0															i	
D-2	3	a																									5.6	18.8		a	3
		b											76.5																	b	
	4	a																									5.6	18.8		a	4
		b													6.2														24" CSP	b	
		c																4.5												c	
		d											74.8																	d	
		e													2.0														24" CSP	e	
		f															1													f	
		g																2.0												g	
		h			GO(Mod)	24-12X	3.0	1	2.04	478.0																				h	
D-3	5	a																								1				a	5
		b																							1					b	
		c													24.4														24" CSP	c	
		d																	29.0											d	
		e			GO(Mod)	24-12X	3.0	1	2.04	478.0																				e	
	6	a																									5.6	18.8		a	6
		b																		1		36.8							33° ELBOW	b	
		c																	68.2											c	
		d													6.0														24" CSP	d	
		e														85.8													24" CSP	e	
		f													7.5														24" CSP	f	
		g															1													g	
		h																					2							h	
SHEET TOTAL								2	4.08	956.0		66.0	151.3		51.1	172.3	3	6.5	164.2	2		57.8	3		1	2	35.7	114.1			

(N) - NOT A SEPARATE PAY ITEM, FOR INFORMATION ONLY.

DRAINAGE QUANTITIES

DQ-1

REVISED BY | DATE REVISED
MYHOA TON | JERRY CAGLE
CALCULATED-DESIGNED BY | CHECKED BY
FUNCTIONAL SUPERVISOR
GILBERT OGAZ

STATE OF CALIFORNIA - DEPARTMENT OF TRANSPORTATION
NORTH REGION
OFFICE OF DESIGN SOUTH
DESIGN BRANCH S2

LAST REVISION 00-00-00 | DATE PLOTTED => 10-MAY-2010 | TIME PLOTTED => 10:53

Dist	COUNTY	ROUTE	POST MILES TOTAL PROJECT	SHEET No.	TOTAL SHEETS
03	ED	50	32.3/39.3	42	67

REGISTERED CIVIL ENGINEER 7-29-09 DATE

5-10-10
PLANS APPROVAL DATE

REGISTERED PROFESSIONAL ENGINEER GERALD R. CAGLE No. 52121 Exp. 12-31-10 CIVIL STATE OF CALIFORNIA

THE STATE OF CALIFORNIA OR ITS OFFICERS OR AGENTS SHALL NOT BE RESPONSIBLE FOR THE ACCURACY OR COMPLETENESS OF SCANNED COPIES OF THIS PLAN SHEET.

DRAINAGE ITEMS

DRAINAGE PLAN SHEET No.	DRAINAGE SYSTEM No.	DRAINAGE UNIT	36" CORRUGATED STEEL PIPE INLET (0.138" THICK)	DRAINAGE INLET: REMOVE INLET	(N) INLET TYPE	(N) FRAME AND GRATE TYPE	(N) HEIGHT OF INLET "H"	(N) LADDER	MINOR CONCRETE (MINOR STRUCTURE)	MISCELLANEOUS IRON AND STEEL	PERMEABLE MATERIAL	PIPELINER: 18" CURED-IN-PLACE PIPELINER	24" CURED-IN-PLACE PIPELINER	24" ALTERNATIVE PIPELINER	CULVERT: REMOVE CULVERT	ABANDON CULVERT	REMOVE HEADWALL	24" CSP (0.138" THICK)	24" ALTERNATIVE PIPE CULVERT	(N) ELBOW	DOWNDRAINS: REMOVE DOWNDRAIN	24" CSP DOWNDRAIN (0.138" THICK)	24" ANCHOR ASSEMBLY	CABLE ANCHORAGE SYSTEM	FES: REMOVE FES	24" STEEL FES	RSP: RSP (FACING, METHOD A)	RSP FABRIC	DESCRIPTION	DRAINAGE UNIT	DRAINAGE SYSTEM No.
			LF	EA	EA	EA	FT-IN	EA	CY	LB	CY	LF	LF	LF	LF	LF	EA	LF	LF	EA	LF	LF	EA	LF	EA	EA	CY	SQYD			
D-4	7	a																		1		89.8							30° ELBOW	a	7
		b																	65.1											b	
		c																			73.2								24" CSP	c	
		d														19.6													24" CSP	d	
		e													61.4														24" CSP	e	
		f		1																										f	
		g			GO(Mod)	24-12X	2.5	1	2.04	478.0																				g	
		h																					4							h	
		i																									5.6	18.8		i	
	8	a																									5.6	18.8		a	8
		b											67.0																	b	
D-5	9	a											194.5																	a	9
		b											101.5																	b	
		c																									5.6	18.8		c	
D-6	10	a																									5.6	18.8		a	10
		b											283.8																	b	
D-7	11	a																		1		42.0							30° ELBOW	a	11
		b																			70.9								24" CSP	b	
		c																				31.5								c	
		d	6.5		GMP	36RX	6.0	1	0.30	215.0																				d	
		e																		1		7.3							29.5° ELBOW	e	
		f																		1		70.1							33° ELBOW	f	
		g																			70.5								24" CSP	g	
		h																7.1												h	
		i			GO	24-12X	3.0	1	1.24	239.0																				i	
		j														142.0													24" CMP	j	
		k																	83.7											k	
		l			GDO	24-12X	3.0	1	1.62	473.0																				l	
		m		1																										m	
		n												8.0															24" CSP	n	
		o																					5							o	
		p																								3.2	12.4			p	
SHEET TOTAL			6.5	2				4	5.20	1405.0			646.8		69.4	161.6		7.1	148.8	4	214.6	240.7	9				25.6	87.6			

(N) - NOT A SEPARATE PAY ITEM, FOR INFORMATION ONLY.

DRAINAGE QUANTITIES

DQ-2

STATE OF CALIFORNIA - DEPARTMENT OF TRANSPORTATION
NORTH REGION
OFFICE OF DESIGN SOUTH
DESIGN BRANCH S2

Caltrans

FUNCTIONAL SUPERVISOR: GILBERT OGAZ
CALCULATED-DESIGNED BY: MYHOA TON
CHECKED BY: JERRY CAGLE
REVISED BY
DATE REVISED

LAST REVISION 00-00-00
DATE PLOTTED => 10-MAY-2010
TIME PLOTTED => 10:53

Dist	COUNTY	ROUTE	POST MILES TOTAL PROJECT	SHEET No.	TOTAL SHEETS
03	ED	50	32.3/39.3	43	67

REGISTERED CIVIL ENGINEER 7-29-09 DATE

5-10-10
PLANS APPROVAL DATE

REGISTERED PROFESSIONAL ENGINEER GERALD R. CAGLE No. 52121 Exp. 12-31-10 CIVIL STATE OF CALIFORNIA

THE STATE OF CALIFORNIA OR ITS OFFICERS OR AGENTS SHALL NOT BE RESPONSIBLE FOR THE ACCURACY OR COMPLETENESS OF SCANNED COPIES OF THIS PLAN SHEET.

DRAINAGE ITEMS

DRAINAGE PLAN SHEET No.	DRAINAGE SYSTEM No.	DRAINAGE UNIT	DRAINAGE INLET: 36" CORRUGATED STEEL PIPE INLET (0.138" THICK)	DRAINAGE INLET: REMOVE INLET	DRAINAGE INLET: (N) INLET TYPE	DRAINAGE INLET: (N) FRAME AND GRATE TYPE	DRAINAGE INLET: (N) HEIGHT OF INLET "H"	DRAINAGE INLET: (N) LADDER	DRAINAGE INLET: MINOR CONCRETE (MINOR STRUCTURE)	DRAINAGE INLET: MISCELLANEOUS IRON AND STEEL	DRAINAGE INLET: PERMEABLE MATERIAL	PIPELINER: 18" CURED-IN-PLACE PIPELINER	PIPELINER: 24" CURED-IN-PLACE PIPELINER	PIPELINER: 24" ALTERNATIVE PIPELINER	CULVERT: REMOVE CULVERT	CULVERT: ABANDON CULVERT	CULVERT: REMOVE HEADWALL	CULVERT: 24" CSP (0.138" THICK)	CULVERT: 24" ALTERNATIVE PIPE CULVERT	(N) ELBOW	DOWNDRAINS: REMOVE DOWNDRAIN	DOWNDRAINS: 24" CSP DOWNDRAIN (0.138" THICK)	DOWNDRAINS: 24" ANCHOR ASSEMBLY	DOWNDRAINS: CABLE ANCHORAGE SYSTEM	FES: REMOVE FES	FES: 24" STEEL FES	RSP: RSP (FACING, METHOD A)	RSP: RSP FABRIC	DESCRIPTION	DRAINAGE UNIT	DRAINAGE SYSTEM No.
			LF	EA	EA	EA	FT-IN	EA	CY	LB	CY	LF	LF	LF	LF	LF	EA	LF	LF	EA	LF	LF	EA	LF	EA	EA	CY	SQYD			
D-8	12	a																									26.8	34.0		a	12
		b																				41.7								b	
		c																			33.2								24" CSP	c	
		d																			34.9								24" CSP	d	
		e																		1		35.5							39° ELBOW	e	
		f																					2							f	
		g	5.5		GCP	36RX	5.7	1	0.35	215.0																				g	
		h													55.4														24" CSP	h	
		i																	53.7											i	
		j		1																										j	
		k			GDO	24-12X	2.8	1	1.88	473.0																				k	
D-9	13	a																									5.6	18.8		a	13
		b																		2		97.1							15° AND 27° ELBOWS	b	
		c																			103.9								18" CSP	c	
		d																			29.3								18" CSP	d	
		e																29.6												e	
		f	4.5		GCP	36RX	4.0	1	0.35	215.0																				f	
		g		1																										g	
		h													61.2														18" CSP	h	
		i																	61.2											i	
		j	3.5		OCP	PLATE	3.0	1	0.35	112.0																				j	
		k		1																										k	
		l																					4							l	
		m																						80						m	
	14	a																									5.6	18.8		a	14
		b																				15.8								b	
		c													11.9														24" CSP	c	
		d														33.5													24" CSP	d	
		e																	65.6											e	
		f													40.0														24" CSP	f	
		g		1																										g	
		h			GO(Mod)	24-12X	3.0	1	2.04	478.0																				h	
		i																					1							i	
SHEET TOTAL			13.5	4				5	4.97	1493.0					168.5	33.5		29.6	180.5	3	201.3	190.1	7	80			38.0	71.6			

(N) - NOT A SEPARATE PAY ITEM, FOR INFORMATION ONLY.

DRAINAGE QUANTITIES
DQ-3

STATE OF CALIFORNIA - DEPARTMENT OF TRANSPORTATION
NORTH REGION
OFFICE OF DESIGN SOUTH
DESIGN BRANCH S2

Caltrans

FUNCTIONAL SUPERVISOR: GILBERT OGAZ
CALCULATED-DESIGNED BY: MYHOA TON
CHECKED BY: JERRY CAGLE
REVISED BY
DATE REVISED

LAST REVISION 00-00-00
DATE PLOTTED => 10-MAY-2010
TIME PLOTTED => 10:53

Dist	COUNTY	ROUTE	POST MILES TOTAL PROJECT	SHEET No.	TOTAL SHEETS
03	ED	50	32.3/39.3	44	67

REGISTERED CIVIL ENGINEER 7-29-09 DATE

5-10-10
PLANS APPROVAL DATE

REGISTERED PROFESSIONAL ENGINEER GERALD R. CAGLE No. 52121 Exp. 12-31-10 CIVIL STATE OF CALIFORNIA

THE STATE OF CALIFORNIA OR ITS OFFICERS OR AGENTS SHALL NOT BE RESPONSIBLE FOR THE ACCURACY OR COMPLETENESS OF SCANNED COPIES OF THIS PLAN SHEET.

DRAINAGE ITEMS

DRAINAGE PLAN SHEET No.	DRAINAGE SYSTEM No.	DRAINAGE UNIT	DRAINAGE INLET: 36" CORRUGATED STEEL PIPE INLET (0.138" THICK)	DRAINAGE INLET: REMOVE INLET	DRAINAGE INLET: (N) INLET TYPE	DRAINAGE INLET: (N) FRAME AND GRATE TYPE	DRAINAGE INLET: (N) HEIGHT OF INLET "H"	DRAINAGE INLET: (N) LADDER	DRAINAGE INLET: MINOR CONCRETE (MINOR STRUCTURE)	DRAINAGE INLET: MISCELLANEOUS IRON AND STEEL	DRAINAGE INLET: PERMEABLE MATERIAL	PIPELINER: 18" CURED-IN-PLACE PIPELINER	PIPELINER: 24" CURED-IN-PLACE PIPELINER	PIPELINER: 24" ALTERNATIVE PIPELINER	CULVERT: REMOVE CULVERT	CULVERT: ABANDON CULVERT	CULVERT: REMOVE HEADWALL	CULVERT: 24" CSP (0.138" THICK)	CULVERT: 24" ALTERNATE PIPE CULVERT	(N) ELBOW	DOWNDRAINS: REMOVE DOWNDRAIN	DOWNDRAINS: 24" CSP DOWNDRAIN (0.138" THICK)	DOWNDRAINS: 24" ANCHOR ASSEMBLY	DOWNDRAINS: CABLE ANCHORAGE SYSTEM	FES: REMOVE FES	FES: 24" STEEL FES	RSP: RSP (FACING, METHOD A)	RSP: RSP FABRIC	DESCRIPTION	DRAINAGE UNIT	DRAINAGE SYSTEM No.
			LF	EA	EA	EA	FT-IN	EA	CY	LB	CY	LF	LF	LF	LF	LF	EA	LF	LF	EA	LF	LF	EA	LF	EA	EA	CY	SQYD			
D-10	15	a														150.7													24" CSP	a	15
		b		1																										b	
		c		1																										c	
		d			G1	24-12X	4.0	1	1.17	239.0																				d	
		e																	49.4											e	
		f																								2.8	11.3			f	
		g			G1	24-12X	4.0	1	1.17	239.0																				g	
		h																	56.2											h	
		i													56.0														18" CSP	i	
D-11	16	a																								1				a	16
		b													77.3														18" CSP	b	
		c																	79.5											c	
	17	a												99.8																a	17
		b												46.7																b	
		c																								2.0	9.2			c	
D-12	18	a																									5.6	18.8		a	18
		b												163.4																b	
	19	a										52.0																		a	19
D-13	20	a		1																										a	20
		b			G1	24-12X	4.0	1	1.17	239.0																				b	
		c													52.1														18" CSP	c	
		d																	52.1											d	
	21	a																									5.6	18.8		a	21
		b													64.2														24" CSP	b	
		c																	63.1											c	
		d		1																										d	
		e			G1	24-12X	4.6	1	1.30	239.0																				e	
		f											64.2																	f	
SHEET TOTAL				4				4	4.81	956.0		52.0	64.2	309.9	249.6	150.7			300.3							1	16.0	58.1			

(N) - NOT A SEPARATE PAY ITEM, FOR INFORMATION ONLY.

DRAINAGE QUANTITIES
DQ-4

STATE OF CALIFORNIA - DEPARTMENT OF TRANSPORTATION
NORTH REGION
OFFICE OF DESIGN SOUTH
DESIGN BRANCH S2

Caltrans

FUNCTIONAL SUPERVISOR: GILBERT OGAZ
CALCULATED-DESIGNED BY: MYHOA TON
CHECKED BY: JERRY CAGLE
REVISED BY
DATE REVISED

LAST REVISION 00-00-00
DATE PLOTTED => 10-MAY-2010
TIME PLOTTED => 10:53

Dist	COUNTY	ROUTE	POST MILES TOTAL PROJECT	SHEET No.	TOTAL SHEETS
03	ED	50	32.3/39.3	45	67

REGISTERED CIVIL ENGINEER 7-29-09 DATE

5-10-10
PLANS APPROVAL DATE

REGISTERED PROFESSIONAL ENGINEER GERALD R. CAGLE No. 52121 Exp. 12-31-10 CIVIL STATE OF CALIFORNIA

THE STATE OF CALIFORNIA OR ITS OFFICERS OR AGENTS SHALL NOT BE RESPONSIBLE FOR THE ACCURACY OR COMPLETENESS OF SCANNED COPIES OF THIS PLAN SHEET.

DRAINAGE ITEMS

DRAINAGE PLAN SHEET No.	DRAINAGE SYSTEM No.	DRAINAGE UNIT	DRAINAGE INLET: 36" CORRUGATED STEEL PIPE INLET (0.138" THICK) (LF)	DRAINAGE INLET: REMOVE INLET (EA)	DRAINAGE INLET: (N) INLET TYPE (EA)	DRAINAGE INLET: (N) FRAME AND GRATE TYPE (EA)	DRAINAGE INLET: (N) HEIGHT OF INLET "H" (FT-IN)	DRAINAGE INLET: (N) LADDER (EA)	DRAINAGE INLET: MINOR CONCRETE (MINOR STRUCTURE) (CY)	DRAINAGE INLET: MISCELLANEOUS IRON AND STEEL (LB)	DRAINAGE INLET: PERMEABLE MATERIAL (CY)	PIPELINER: 18" CURED-IN-PLACE PIPELINER (LF)	PIPELINER: 24" CURED-IN-PLACE PIPELINER (LF)	PIPELINER: 24" ALTERNATIVE PIPELINER (LF)	CULVERT: REMOVE CULVERT (EA)	CULVERT: ABANDON CULVERT (EA)	CULVERT: REMOVE HEADWALL (EA)	CULVERT: 24" CSP (0.138" THICK) (LF)	CULVERT: 24" ALTERNATIVE PIPE CULVERT (LF)	CULVERT: (N) ELBOW (EA)	DOWNDRAINS: REMOVE DOWNDRAIN (LF)	DOWNDRAINS: 24" CSP DOWNDRAIN (0.138" THICK) (LF)	DOWNDRAINS: 24" ANCHOR ASSEMBLY (EA)	DOWNDRAINS: CABLE ANCHORAGE SYSTEM (LF)	FES: REMOVE FES (EA)	FES: 24" STEEL FES (EA)	RSP: RSP (FACING, METHOD A) (CY)	RSP: RSP FABRIC (SQYD)	DESCRIPTION	DRAINAGE UNIT	DRAINAGE SYSTEM No.
D-14	22	a																									4.8	11.6		a	22
		b																	51.3											b	
		c													50.1														18" CSP	c	
		d		1																										d	
		e			G1	24-12X	4.0	1	1.17	239.0																				e	
	24	a											19.9																	a	24
		b											82.8																	b	
		c											47.1																	c	
D-15	25	a											67.1																	a	25
		b											46.3																	b	
	27	a																									5.6	18.8		a	27
		b											97.8																	b	
		c													32.1														24" CSP	c	
		d																	32.1											d	
		e		1																										e	
		f			G1	24-12X	2.7	1	0.95	239.0																				f	
D-16	28	a												87.0																a	28
		b																									5.6	18.8		b	
	29	a																	42.5	1									38° ELBOW	a	29
		b																			83.0								24" CMP	b	
		c																		1		60.2							38° ELBOW	c	
		d	4.5		GCP	36RX	4.0	1	0.30	215.0																				d	
		e																	87.0											e	
		f													101.0														24" CMP	f	
		g			GO(Mod)	24-12X	3.2	1	2.23	478.0																				g	
		h		1																										h	
		i																					2							i	
		j																									5.6	18.8		j	
D-17	30	a																									5.6	18.8		a	30
		b												119.7																b	
SHEET TOTAL			4.5	3				4	4.65	1171.0			361.0	206.7	183.2				212.9	2	83.0	60.2	2				27.2	86.8			

(N) - NOT A SEPARATE PAY ITEM, FOR INFORMATION ONLY.

DRAINAGE QUANTITIES

DQ-5

STATE OF CALIFORNIA - DEPARTMENT OF TRANSPORTATION
NORTH REGION
OFFICE OF DESIGN SOUTH
DESIGN BRANCH S2

FUNCTIONAL SUPERVISOR: GILBERT OGAZ
CALCULATED-DESIGNED BY: MYHOA TON
CHECKED BY: JERRY CAGLE
REVISED BY
DATE REVISED

LAST REVISION 00-00-00
DATE PLOTTED => 10-MAY-2010
TIME PLOTTED => 10:53

Dist	COUNTY	ROUTE	POST MILES TOTAL PROJECT	SHEET No.	TOTAL SHEETS
03	ED	50	32.3/39.3	46	67

REGISTERED CIVIL ENGINEER 7-29-09 DATE

5-10-10
PLANS APPROVAL DATE

REGISTERED PROFESSIONAL ENGINEER GERALD R. CAGLE No. 52121 Exp. 12-31-10 CIVIL STATE OF CALIFORNIA

THE STATE OF CALIFORNIA OR ITS OFFICERS OR AGENTS SHALL NOT BE RESPONSIBLE FOR THE ACCURACY OR COMPLETENESS OF SCANNED COPIES OF THIS PLAN SHEET.

DRAINAGE ITEMS

			DRAINAGE INLET									PIPELINER			CULVERT						DOWNDRAINS				FES		RSP				
DRAINAGE PLAN SHEET No.	DRAINAGE SYSTEM No.	DRAINAGE UNIT	36" CORRUGATED STEEL PIPE INLET (0.138" THICK)	REMOVE INLET	(N) INLET TYPE	(N) FRAME AND GRATE TYPE	(N) HEIGHT OF INLET "H"	(N) LADDER	MINOR CONCRETE (MINOR STRUCTURE)	MISCELLANEOUS IRON AND STEEL	PERMEABLE MATERIAL	18" CURED-IN-PLACE PIPELINER	24" CURED-IN-PLACE PIPELINER	24" ALTERNATIVE PIPELINER	REMOVE CULVERT	ABANDON CULVERT	REMOVE HEADWALL	24" CSP (0.138" THICK)	24" ALTERNATE PIPE CULVERT	(N) ELBOW	REMOVE DOWNDRAIN	24" CSP DOWNDRAIN (0.138" THICK)	24" ANCHOR ASSEMBLY	CABLE ANCHORAGE SYSTEM	REMOVE FES	24" STEEL FES	RSP (FACING, METHOD A)	RSP FABRIC	DESCRIPTION	DRAINAGE UNIT	DRAINAGE SYSTEM No.
			LF	EA	EA	EA	FT-IN	EA	CY	LB	CY	LF	LF	LF	LF	LF	LF	LF	LF	EA	EA	LF	EA	LF	EA	EA	CY	SQYD			
	31	a																									5.6	18.8		a	31
		b												89.6																b	
D-18	32	a																									4.8	16.6		a	32
		b												119.9																b	
D-18	33	a																		1		101.5							30° ELBOW	a	33
		b											84.0																	b	
		c																			101.5								24" CMP DD	c	
		d																						80.0						d	
		e																					5							e	
		f																									5.6	18.8		f	
	34	a												94.7																a	34
D-19	35	a																									9.5	24.8		a	35
		b											210.9																	b	
		c											90.8																	c	
	36	a																									4.8	16.6		a	36
		b												84.0																b	
	37	a																		1		59.3							33° ELBOW	a	37
		b																			53.8								24" CSP DD ON DP-20	b	
		c												99.7																c	
		d													5.5														24" CSP	d	
		e																3.0												e	
		f																						45.0						f	
		g																					3							g	
		h																									5.6	18.8		h	
D-20	38	a																2.0												a	38
		b													2.0														24" CSP	b	
		c												110.9																c	
		d																									5.6	18.8		d	
	39	a													22.0														24" CSP	a	39
		b																									5.6	18.8		b	
		c												223.6																c	
		d			GT3 (Mod) W/ ST	24-9	3.0	1	1.8	526	0.8																			d	
SHEET TOTAL								1	1.8	526	0.8		385.7	822.4	29.5			5.0		2	155.3	160.8	8	125.0			47.1	152.0			

(N) - NOT A SEPARATE PAY ITEM, FOR INFORMATION ONLY.

DRAINAGE QUANTITIES DQ-6

STATE OF CALIFORNIA - DEPARTMENT OF TRANSPORTATION
Caltrans
NORTH REGION
OFFICE OF DESIGN SOUTH
DESIGN BRANCH S2

FUNCTIONAL SUPERVISOR: GILBERT OGAZ
CALCULATED-DESIGNED BY: MYHOA TON
CHECKED BY: JERRY CAGLE
REVISED BY
DATE REVISED

LAST REVISION 00-00-00
DATE PLOTTED => 10-MAY-2010
TIME PLOTTED => 10:53

Dist	COUNTY	ROUTE	POST MILES TOTAL PROJECT	SHEET No.	TOTAL SHEETS
03	ED	50	32.3/39.3	47	67

REGISTERED CIVIL ENGINEER 7-29-09 DATE

5-10-10
PLANS APPROVAL DATE

REGISTERED PROFESSIONAL ENGINEER GERALD R. CAGLE No. 52121 Exp. 12-31-10 CIVIL STATE OF CALIFORNIA

THE STATE OF CALIFORNIA OR ITS OFFICERS OR AGENTS SHALL NOT BE RESPONSIBLE FOR THE ACCURACY OR COMPLETENESS OF SCANNED COPIES OF THIS PLAN SHEET.

DRAINAGE ITEMS

DRAINAGE PLAN SHEET No.	DRAINAGE SYSTEM No.	DRAINAGE UNIT	DRAINAGE INLET: 36" CORRUGATED STEEL PIPE INLET (0.138" THICK)	REMOVE INLET	(N) INLET TYPE	(N) FRAME AND GRATE TYPE	(N) HEIGHT OF INLET "H"	(N) LADDER	MINOR CONCRETE (MINOR STRUCTURE)	MISCELLANEOUS IRON AND STEEL	PERMEABLE MATERIAL	PIPELINER: 18" CURED-IN-PLACE PIPELINER	24" CURED-IN-PLACE PIPELINER	24" ALTERNATIVE PIPELINER	CULVERT: REMOVE CULVERT	ABANDON CULVERT	REMOVE HEADWALL	24" CSP (0.138" THICK)	24" ALTERNATIVE PIPE CULVERT	(N) ELBOW	DOWNDRAINS: REMOVE DOWNDRAIN	24" CSP DOWNDRAIN (0.138" THICK)	24" ANCHOR ASSEMBLY	CABLE ANCHORAGE SYSTEM	FES: REMOVE FES	24" STEEL FES	RSP: RSP (FACING, METHOD A)	RSP FABRIC	DESCRIPTION	DRAINAGE UNIT	DRAINAGE SYSTEM No.
			LF	EA	EA	EA	FT-IN	EA	CY	LB	CY	LF	LF	LF	LF	LF	EA	LF	LF	EA	LF	LF	EA	LF	EA	EA	CY	SQYD			
D-11	40	a																									3.6	13.4		a	40
		b												92.5																b	
↓		c			GT3 (Mod) W/ ST	24-9	3.0	1	1.80	526.0	0.8																			c	
SHEET TOTAL								1	1.80	526.0	0.8			92.5													3.6	13.4			
SHEET DQ-1 TOTAL								2	4.08	956.0		66.0	151.3		51.1	172.3	3	6.5	164.2	2		57.8	3		1	2	35.7	114.1			
SHEET DQ-2 TOTAL			6.5	2				4	5.20	1405.0			646.8		69.4	161.6		7.1	148.8	4	214.6	240.7	9				25.6	87.6			
SHEET DQ-3 TOTAL			13.5	4				5	4.97	1493.0					168.5	33.5		29.6	180.5	3	201.3	190.1	7	80			38.0	71.6			
SHEET DQ-4 TOTAL				4				4	4.81	956.0		52.0	64.2	309.9	249.6	150.7			300.3							1	16.0	58.1			
SHEET DQ-5 TOTAL			4.5	3				4	4.65	1171.0			361.0	206.7	183.2				212.9	2	83.0	60.2	2				27.2	86.8			
SHEET DQ-6 TOTAL								1	1.80	526.0	0.8		385.7	822.4	29.5			5.0		2	155.3	160.8	8	125.0			47.1	152.0			
TOTAL			24.5	13				21	27.31	7033.0	1.6	118.0	1609.0	1431.5	751.3	518.1	3	48.2	1006.7	13	654.2	709.6	29	205.0	1	3	193.2	593.6			

(N) - NOT A SEPARATE PAY ITEM, FOR INFORMATION ONLY.

CALCULATED-DESIGNED BY | CHECKED BY | REVISED BY | DATE REVISED

MYHOA TON | JERRY CAGLE | FUNCTIONAL SUPERVISOR | GILBERT OGAZ

STATE OF CALIFORNIA - DEPARTMENT OF TRANSPORTATION
Caltrans
NORTH REGION
OFFICE OF DESIGN SOUTH
DESIGN BRANCH S2

DRAINAGE QUANTITIES DQ-7

LAST REVISION 00-00-00 | DATE PLOTTED => 10-MAY-2010 | TIME PLOTTED => 10:54

Dist	COUNTY	ROUTE	POST MILES TOTAL PROJECT	SHEET No.	TOTAL SHEETS
03	ED	50	32.3/39.3	48	67

REGISTERED CIVIL ENGINEER 7-29-09 DATE

5-10-10
PLANS APPROVAL DATE

REGISTERED PROFESSIONAL ENGINEER GERALD R. CAGLE No. 52121 Exp. 12-31-10 CIVIL STATE OF CALIFORNIA

THE STATE OF CALIFORNIA OR ITS OFFICERS OR AGENTS SHALL NOT BE RESPONSIBLE FOR THE ACCURACY OR COMPLETENESS OF SCANNED COPIES OF THIS PLAN SHEET.

STATIONARY MOUNTED CONSTRUCTION AREA SIGNS

SIGN LETTER	SIGN CODE FEDERAL	SIGN CODE CALIFORNIA	PANEL SIZE	SIGN MESSAGE	NUMBER OF POST AND SIZE	NUMBER OF SIGNS
A	G20-1 [SPEC] (3)		60" x 30"	ROAD WORK NEXT 3 MILES	2 - 4" x 6"	2
B	W20-1	C23	48" x 48"	ROAD WORK AHEAD	1 - 6" x 6"	2
C	W20-1	C23	36" x 36"	ROAD WORK AHEAD	1 - 4" x 6"	7
D		C14	48" x 24"	END ROAD WORK	1 - 4" x 6"	4
E		C40A(MOD)	72" x 42"	TRAFFIC FINES DOUBLED IN WORK ZONES	2 - 4" x 6"	2

NOTE:

EXACT SIGN LOCATIONS TO BE DETERMINED BY THE ENGINEER.

SIGN DETAILS

(A) G20-1 [Spec] (3)

ROAD WORK
NEXT 3 MILES

6" C

60" x 30"

RETROREFLECTIVE ORANGE BACKGROUND WITH BLACK LEGEND AND BORDER.

(E) C40(Mod) <CA>

TRAFFIC FINES
DOUBLED IN
WORK ZONES

6" D

72" x 42"

RETROREFLECTIVE WHITE BACKGROUND WITH BLACK LEGEND AND BORDER.

LEGEND

ONE POST

TWO POST

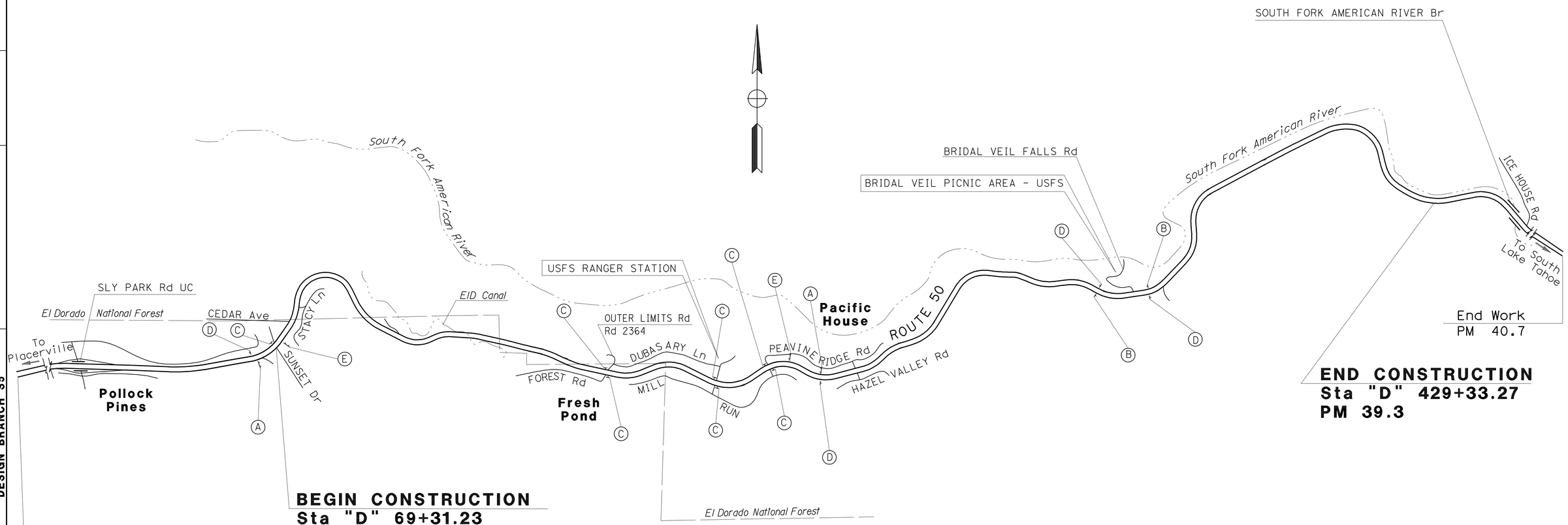

THIS PLAN ACCURATE FOR CONSTRUCTION AREA SIGN WORK ONLY

CONSTRUCTION AREA SIGNS

NO SCALE

CS-1

STATE OF CALIFORNIA - DEPARTMENT OF TRANSPORTATION
NORTH REGION
OFFICE OF DESIGN WEST
DESIGN BRANCH S5

Caltrans

FUNCTIONAL SUPERVISOR: GILBERT OGAZ

CALCULATED-DESIGNED BY: NOELIA BRADLEY
CHECKED BY: JERRY CAGLE

REVISED BY
DATE REVISED

LAST REVISION 00-00-00
DATE PLOTTED => 10-MAY-2010
TIME PLOTTED => 10:54

Dist	COUNTY	ROUTE	POST MILES TOTAL PROJECT	SHEET No.	TOTAL SHEETS
03	ED	50	32.3/39.3	49	67

REGISTERED CIVIL ENGINEER 7-29-09 DATE

5-10-10
PLANS APPROVAL DATE

REGISTERED PROFESSIONAL ENGINEER GERALD R. CAGLE No. 52121 Exp. 12-31-10 CIVIL STATE OF CALIFORNIA

THE STATE OF CALIFORNIA OR ITS OFFICERS OR AGENTS SHALL NOT BE RESPONSIBLE FOR THE ACCURACY OR COMPLETENESS OF SCANNED COPIES OF THIS PLAN SHEET.

TEMPORARY FENCE (TYPE ESA)

DRAINAGE SYSTEM No.	TEMPORARY FENCE (TYPE ESA)
	LF
1	80
9	105
10	130
11	170
21	100
35	60
TOTAL	645

TEMPORARY WETLAND PROTECTION MAT

DRAINAGE SYSTEM No.	TEMPORARY WETLAND PROTECTION MAT
	EA
1	27
21	36
TOTAL	63

RECONSTRUCT MBGR

DRAINAGE SYSTEM No.	LF
4	12.5
6	12.5
11	37.5
12	12.5
13	18.75
TOTAL	93.75

TEMPORARY EROSION CONTROL

TEMPORARY DRAINAGE INLET PROTECTION	TEMPORARY HYDRAULIC MULCH (BONDED FIBER MATRIX)
EA	SQYD
10	440

MISCELLANEOUS ROADWAY ITEMS

DRAINAGE SYSTEM No.	STATION		IMPORTED BORROW	PLACE HMA DIKE (TYPE A)	MINOR HOT MIX ASPHALT	ROCK EXCAVATION (CONTROLLED BLASTING)	DESCRIPTION
	FROM	TO	CY	LF	TON	CY	
2					5.3		REPLACE SURFACE 3' x 50.5'
4			1.5		3.0		RECONSTRUCT DI APRON
6			8.9		5.3		REPLACE SURFACE 3' x 50.3'
7			0.15		1.6		DI APRON
11					7.3		REPLACE SURFACE 3' x 69.1'
	"D" 127+03.550	"D" 127+15.634		12.6	1.2		DI APRON
	"D" 127+19.593	"D" 127+22.932		11.1	0.9		DI APRON
12			1.8		5.1		REPLACE SURFACE 3' x 48.8'
12			0.4		3.0		DI APRON
13					5.2		REPLACE SURFACE 3' x 49.1'
					0.1		RECONSTRUCT DI APRON
14					5.3		REPLACE SURFACE 3' x 50.6'
14			0.15		1.6		DI APRON
15e					3.9		REPLACE SURFACE 3' x 37.6'
15h					3.9		REPLACE SURFACE 3' x 37.5'
20					3.6		REPLACE SURFACE 3' x 34.3'
22					4.2		REPLACE SURFACE 3' x 40.3'
29					7.1		REPLACE SURFACE 3' x 102.0'
39d						5.0	INSTALL SAND TRAP
40c						3.0	INSTALL SAND TRAP
		TOTAL	12.9	23.7	67.6	8.0	

SUMMARY OF QUANTITIES

Q-1

STATE OF CALIFORNIA - DEPARTMENT OF TRANSPORTATION
NORTH REGION
OFFICE OF DESIGN SOUTH
DESIGN BRANCH S2

Caltrans

FUNCTIONAL SUPERVISOR: GILBERT OGAZ
CALCULATED-DESIGNED BY: MYHOA TON
CHECKED BY: JERRY CAGLE
REVISED BY
DATE REVISED

LAST REVISION 00-00-00
DATE PLOTTED => 10-MAY-2010
TIME PLOTTED => 11:24

DIST	COUNTY	ROUTE	POST MILES TOTAL PROJECT	SHEET NO.	TOTAL SHEETS
03	ED	50	32.3/39.3	50	67

REGISTERED CIVIL ENGINEER

November 17, 2006
PLANS APPROVAL DATE

REGISTERED PROFESSIONAL ENGINEER Dallas Forester No. C37765 Exp. 12-31-06 CIVIL STATE OF CALIFORNIA

The State of California or its officers or agents shall not be responsible for the accuracy or completeness of electronic copies of this plan sheet.

To accompany plans dated 5-10-10

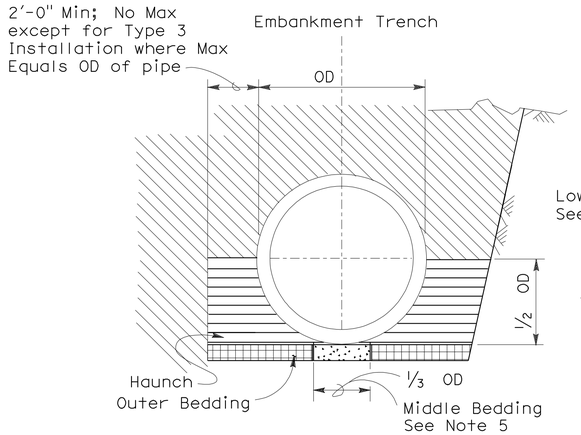

BACKFILL

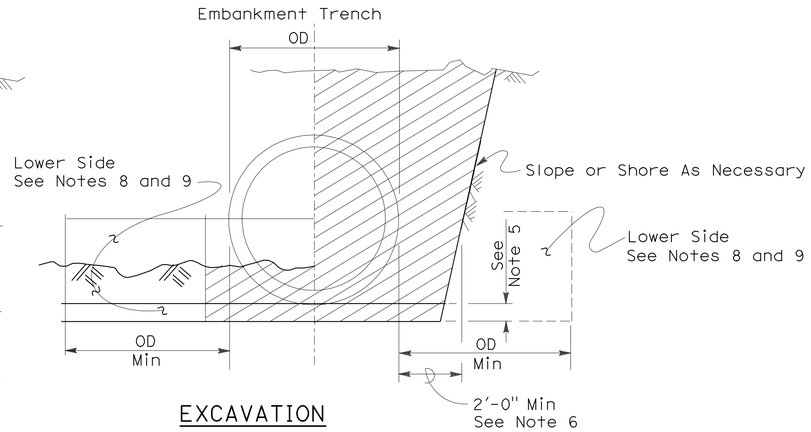

EXCAVATION

Roadway Embankment

Structure Backfill (Culvert) See Note 6

Structure Backfill (Culvert) See Note 6

Loose Backfill

Excavation Structure (Culvert)

TYPE 1 INSTALLATION:

The haunch and outer bedding shall be compacted to a minimum 90 percent relative compaction. In addition, the minimum sand equivalent in these areas shall be 30 and the maximum percentage passing the 75 μm sieve size shall be 12.

TYPE 2 INSTALLATION:

The haunch and outer bedding shall be compacted to a minimum 90 percent relative compaction. In addition, the minimum sand equivalent in these areas shall be 25.

TYPE 3 INSTALLATION:

The haunch and outer bedding shall be compacted to a minimum 85 percent relative compaction. 90 percent relative compaction will be required where the fill over the pipe is less than 4'-0" or 1/2 OD.

NOTES:

1. Unless otherwise shown on the plans or specified in the special provision, the Contractor shall have the option of selecting the class of RCP and the type of installation to be used, provided the height of cover does not exceed the value shown for the RCP selected.
   Example: 24" RCP culvert with maximum cover of 19'-0" the options are:
   a) Class III or stronger with Installation Type 1.
   b) Class III Special or stronger with Installation Type 2.
   c) Class IV Special or stronger with Installation Type 3.
   Cover is defined as the maximum vertical distance from top of the pipe to finished grade within the length of any given culvert.
2. The class of RCP and Installation Type selected shall be the same throughout the length of any given culvert.
3. The "length of any culvert" is defined as the culvert between:
   a) Successive drainage structure (inlets, junction boxes, headwalls, etc.).
   b) A drainage structure and the inlet or outlet end of the culvert.
   c) The inlet and outlet end of the culvert when there are no intervening drainage structures.
4. Oval and arch shaped RCP shall not be used.
5. 1/25 OD Min, not less than 3".
6. Slurry cement backfill may be substituted for backfill in the outer bedding and haunch areas. If slurry is used the outer and middle beddings shall be omitted. Prior to installation the soil under the middle 1/3 of the outside diameter of the pipe shall be softened by scarifying or other means to a minimum depth of 1/25 OD, but not less than 3". Where slurry cement backfill is used clear distance to trench wall may be reduced as set forth in Section 19-3.062 of the Standard Specifications.
7. Backfill shall be placed full width of excavation except where dimensions are shown for backfill width or thickness. Dimensions shown are minimums.
8. Lower side shall be suitable material as determined by the Engineer. Otherwise it shall be considered unsuitable as set forth in Section 19-2.02 of the Standard Specifications. See Note 9.
9. Where the pipe is placed in a trench, if the trench walls are sloped at 5 vertical to 1 horizontal or steeper for at least 90 percent of the trench height or up to not less than 12" from the grading plane, the firmness of the soil in the lower side need not be considered.
10. Non-reinforced precast concrete pipe sizes 3'-0" or smaller may be placed under installation Types 1, 2 or 3.

INSTALLATION TYPE 1

MINIMUM CLASS AND D-LOAD	COVER	
	108" Dia AND SMALLER	OVER 108" Dia
Class II 1000D	14.9'	12.9'
Class III 1350D	15.0' - 20.9'	13.0' - 18.9'
Class III Special 1700D	21.0' - 26.9'	19.0' - 24.9'
Class IV 2000D	27.0' - 31.9'	25.0' - 29.9'
Class IV Special 2500D	32.0' - 40.9'	30.0' - 38.9'
Class V 3000D	41.0' - 49.9'	39.0' - 46.9'
Class V Special 3600D	50.0' - 59.0'	47.0' - 58.0'

INSTALLATION TYPE 2

MINIMUM CLASS AND D-LOAD	COVER
Class II 1000D	9.9'
Class III 1350D	10.0'- 14.9'
Class III Special 1700D	15.0' - 19.9'
Class IV 2000D	20.0' - 24.9'
Class IV Special 2500D	25.0' - 31.9'
Class V 3000D	32.0' - 38.9'
Class V Special 3600D	39.0' - 47.0'

INSTALLATION TYPE 3

MINIMUM CLASS AND D-LOAD	COVER	
	48" Dia AND SMALLER	OVER 48" Dia
Class II 1000D	7.9'	5.9'
Class III 1350D	8.0' - 10.9'	6.0' - 8.9'
Class III Special 1700D	11.0' - 14.9'	9.0' - 12.9'
Class IV 2000D	15.0' - 17.9'	13.0' - 15.9'
Class IV Special 2500D	18.0' - 21.9'	16.0' - 19.9'
Class V 3000D	22.0' - 26.9'	20.0' - 24.9'
Class V Special 3600D	30.0' - 33.0'	25.0' - 31.0'

STATE OF CALIFORNIA
DEPARTMENT OF TRANSPORTATION

EXCAVATION AND BACKFILL CONCRETE PIPE CULVERTS

NO SCALE

RSP A62DA DATED NOVEMBER 17, 2006 SUPERSEDES STANDARD PLAN A62DA DATED MAY 1, 2006 - PAGE 20 OF THE STANDARD PLANS BOOK DATED MAY 2006.

REVISED STANDARD PLAN RSP A62DA

2006 REVISED STANDARD PLAN RSP A62DA

10-26-06

DIST	COUNTY	ROUTE	POST MILES TOTAL PROJECT	SHEET NO.	TOTAL SHEETS
03	ED	50	32.3/39.3	51	67

Randell D. Hiatt
REGISTERED CIVIL ENGINEER

June 6, 2008
PLANS APPROVAL DATE

REGISTERED PROFESSIONAL ENGINEER
Randell D. Hiatt
No. C50200
Exp. 6-30-09
CIVIL
STATE OF CALIFORNIA

The State of California or its officers or agents shall not be responsible for the accuracy or completeness of electronic copies of this plan sheet.

To accompany plans dated 5-10-10

NOTES:

1. When necessary to place dike in front of face of guard railing, only Type C dike may be used. For dike details, see Standard Plan A87B.
2. For standard railing post embedment, see Standard Plans A77C3.
3. Guard railing delineation to be used where shown on the Project Plans.
4. When dike or curb is placed under guard railing, the maximum height of the dike or curb shall be 4". Mountable dike should not be used. For dike and curb details, see Revised Standard Plans RSP A87A and Standard Plan A87B.
5. For details of typical distance between the face of rail and hinge point, see Standard Plan A77C3.

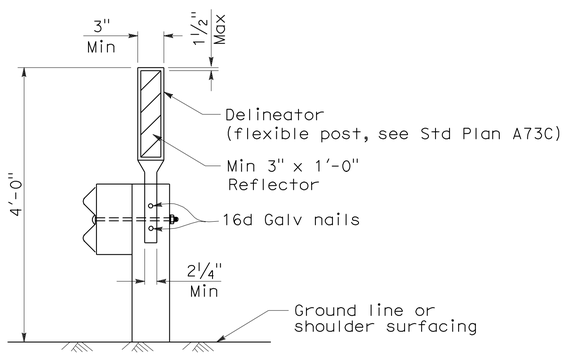

GUARD RAILING DELINEATION

See Note 3

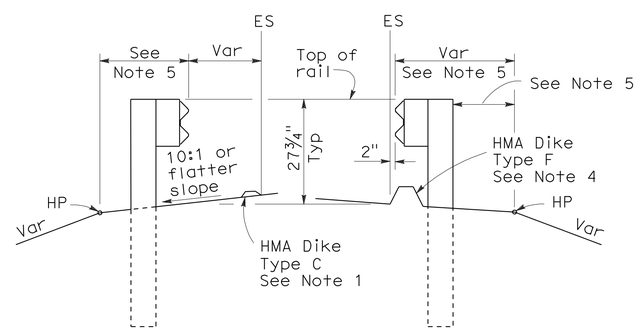

DIKE POSITIONING

See Note 1

STATE OF CALIFORNIA
DEPARTMENT OF TRANSPORTATION

METAL BEAM GUARD RAILING TYPICAL RAILING DELINEATION AND DIKE POSITIONING DETAILS

NO SCALE

RSP A77C4 DATED JUNE 6, 2008 SUPERSEDES STANDARD PLAN A77C4
DATED MAY 1, 2006 - PAGE 47 OF THE STANDARD PLANS BOOK DATED MAY 2006.

REVISED STANDARD PLAN RSP A77C4

2006 REVISED STANDARD PLAN RSP A77C4

12-10-07

DIST	COUNTY	ROUTE	POST MILES TOTAL PROJECT	SHEET NO.	TOTAL SHEETS
03	ED	50	32.3/39.3	52	67

REGISTERED CIVIL ENGINEER

June 15, 2007
PLANS APPROVAL DATE

REGISTERED PROFESSIONAL ENGINEER Glenn DeCou No. C34547 Exp. 9-30-07 CIVIL STATE OF CALIFORNIA

The State of California or its officers or agents shall not be responsible for the accuracy or completeness of electronic copies of this plan sheet.

To accompany plans dated 5-10-10

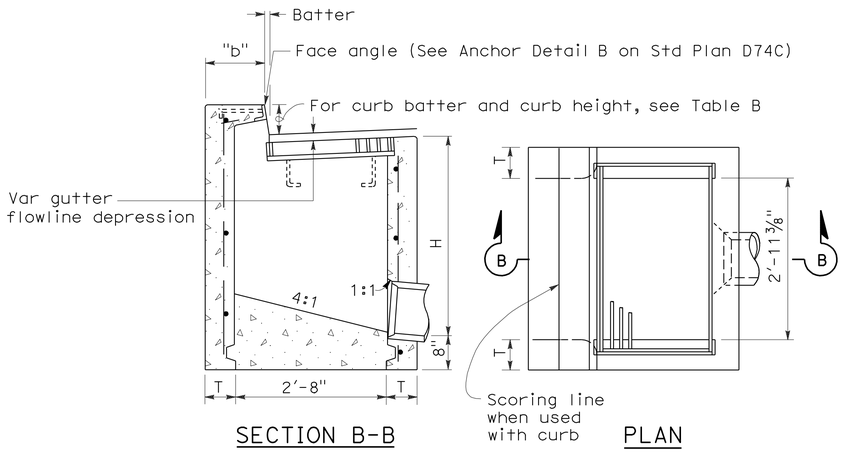

SECTION B-B PLAN

TYPE GO

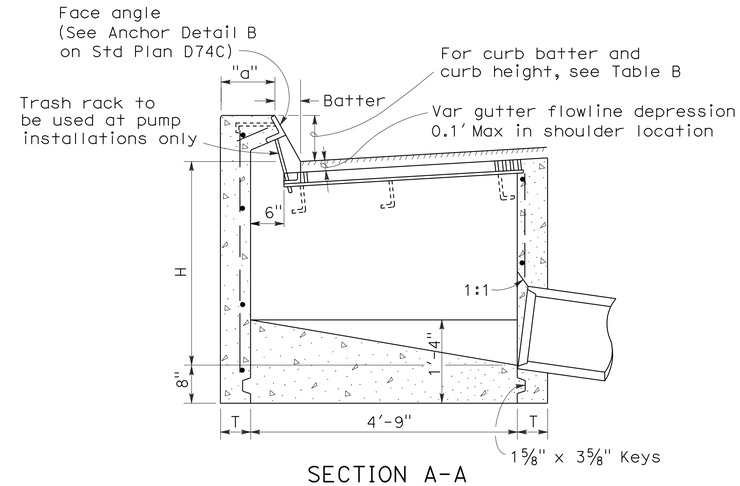

SECTION A-A

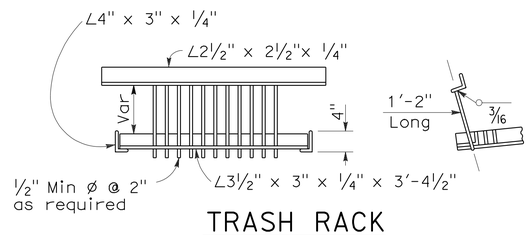

TRASH RACK

(For use with pump installation)

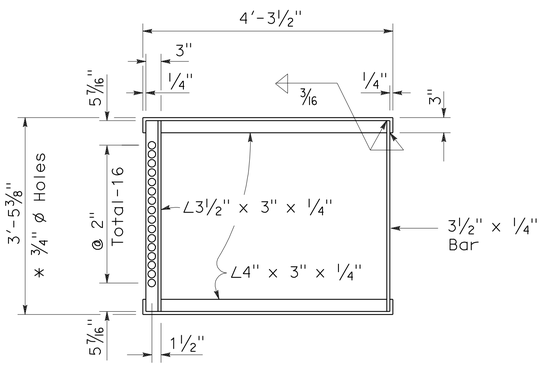

* 3/4" ø Holes required only with trash rack

GRATE FRAME FOR TYPE GDO INLET

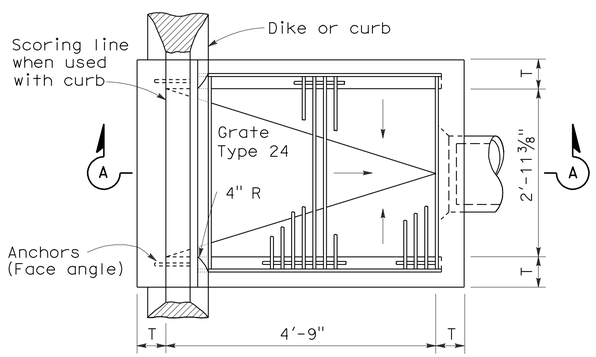

PLAN

TYPE GDO

TABLE A

CONCRETE QUANTITIES				
TYPE	H=3'-0" TO 8'-0" (T=6")		H=8'-1" TO 20'-0" (T=8")	
	H=3'-0" (CY)	ADDITIONAL PCC PER FOOT (CY)	H=8'-1" (CY)	ADDITIONAL PCC PER FOOT (CY)
GO	1.24	0.245	3.39	0.346
GDO	1.62	0.322	4.36	0.446

Table based on 8" floor slab, no deduction for pipe openings, and curb type giving highest quantity of concrete. No deductions or adjustments are to be made to these quantities because of pipe openings, different floor alternatives or different curb type.

TABLE B

CURB TYPE	NORMAL CURB HEIGHT	CURB BATTER	"a" DIMENSION	"b" DIMENSION
A1-6	6"	1 1/2"	T+7 1/2"	T+6 1/2"
A1-8	8"	2"	T+7"	T+6"
B1-6	6"	4"	T+5"	T+4"
Type A Dike	6"	3"	T+6"	T+5"

NOTES:

1. "H" is the difference in elevation between the outlet pipe flow line and the normal gutter grade line undepressed.
2. For "T" wall thickness, see Table A below.
3. Wall reinforcing not required when "H" is 8'-0" or less and the unsupported width or length is 7'-0" or less. Walls exceeding these limits shall be reinforced with #4 @ 18"± centers placed 1 1/2" clear to inside of box unless otherwise shown.
4. Inlet bottom reinforcing not required. See Standard Plan D74C for alternative reinforced bottom.
5. Steps - None required where "H" is less than 2'-6" Where "H" is 2'-6" or more, install steps with lowest rung 1'-0" above the floor and highest rung not more than 6" below top of inlet. The distance between steps shall not exceed 1'-0" and shall be uniform throughout the length of the wall. Place steps in the wall without an opening. Step inserts may be substituted for the bar steps. Step Inserts shall comply with State Industrial Safety requirements. See Standard Plan D74C for step details.
6. When shown on the project plans, place a 3/4" plain round protection bar horizontally across the length of the opening and bend back 4" into the inlet wall on each side.
7. Pipe(s) can be placed in any wall.
8. Curb section shall match adjacent curb.
9. Basin floors shall have wood trowel finish and shall slope toward the outlet pipe as shown.
10. Galvanizing - See Standard Specifications or Special Provisions.
11. See Standard Plan D77A and D77B for grate and frame details and weights of miscellaneous iron and Steel.
12. See Standard Plan D78A for gutter depression details.
13. Full penetration butt welds may be substituted for the fillet welds on all anchors.
14. Standard square, hexagon, round or equivalent headed anchors may be substituted for the right angle hooks on the anchors shown on this plan.
15. Cast-in-place or precast alternative is optional with contractor. See Standard Specifications.
16. Cast-in-place inlets to be formed around all pipes/stubs intersecing the inlet and concrete poured in one continuous operation. Precast inlets shall have mortared pipe connections conforming to details for Type GCP inlets on Standard Plan D75B. See Standard Specifications for mortar composition.

STATE OF CALIFORNIA
DEPARTMENT OF TRANSPORTATION

DRAINAGE INLETS

NO SCALE

RSP D74B DATED JUNE 15, 2007 SUPERSEDES STANDARD PLAN D74B DATED MAY 1, 2006 - PAGE 150 OF THE STANDARD PLANS BOOK DATED MAY 2006.

REVISED STANDARD PLAN RSP D74B

2006 REVISED STANDARD PLAN RSP D74B

4-16-07

DIST	COUNTY	ROUTE	POST MILES TOTAL PROJECT	SHEET NO.	TOTAL SHEETS
03	ED	50	32.3/39.3	53	67

Raymond Don Tsztoo
REGISTERED CIVIL ENGINEER

June 6, 2008
PLANS APPROVAL DATE

REGISTERED PROFESSIONAL ENGINEER
Raymond Don Tsztoo
No. C37332
Exp. 6-30-08
CIVIL
STATE OF CALIFORNIA

The State of California or its officers or agents shall not be responsible for the accuracy or completeness of electronic copies of this plan sheet.

To accompany plans dated 5-10-10

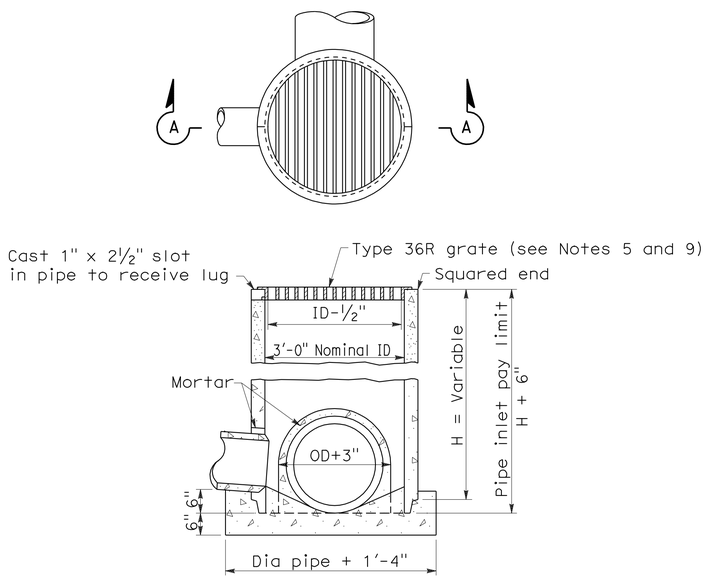

SECTION A-A

TYPE GCP

CONCRETE PIPE INLET WITH GRATE

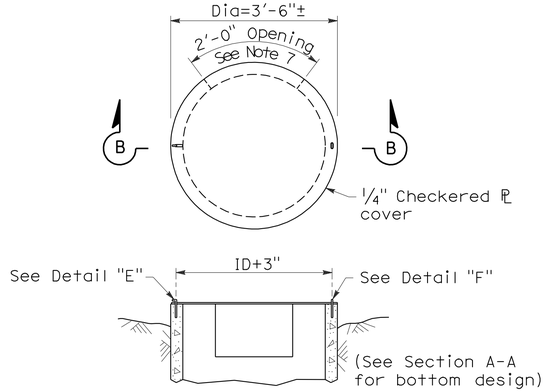

SECTION B-B

TYPE OCP or OCPI

CONCRETE PIPE INLET WITH STEEL COVER
(See Note 6)

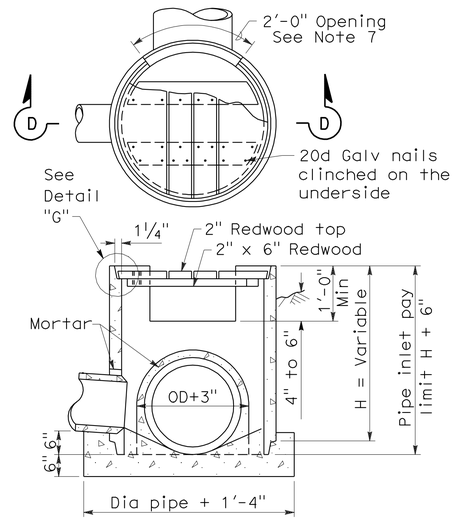

SECTION D-D

TYPE OCP or OCPI

CONCRETE PIPE INLET WITH REDWOOD COVER
(See Notes 6 and 10)

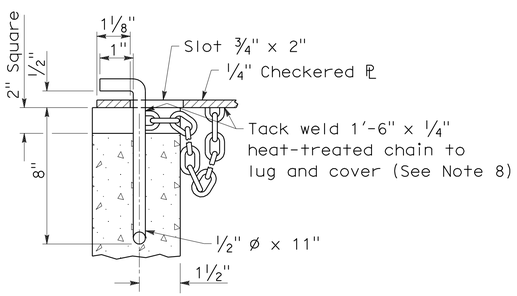

DETAIL "E"

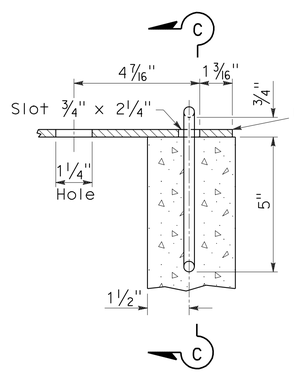

DETAIL "F"

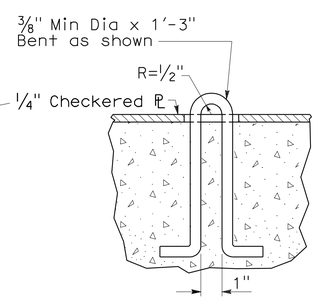

SECTION C-C

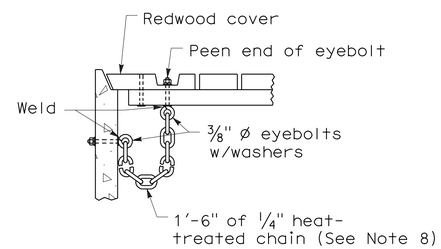

DETAIL "G"

NOTES:

1. For details of steel pipe inlets, see Standard Plan D75A.
2. For details of ladder and steps and when ladder or steps are required, see Standard Plan D75C.
3. Inlet pipes shall not protrude into basin.
4. Except for inlets used for junction boxes, basin floors shall have minimum slope of 4:1 from all directions toward outlet pipe, and a wood trowel finish.
5. See Revised Standard Plan RSP D77A and Standard Plan D77B for Grate and Frame Details and Weights of Miscellaneous Iron and Steel.
6. Designation of Type OCPI pipe inlets on plans indicates trash racks are to be furnished and installed on all side openings. See Standard Plan D75C for Trash Rack details.
7. More than one side opening may be required. Location and number as ordered by the Engineer. Opening may be cast in pipe.
8. Chain to be provided when specified.
9. Place pipe so bars of grate will be parallel with main surface flow.
10. Redwood covers shall only be placed at locations designated on the plans.

STATE OF CALIFORNIA
DEPARTMENT OF TRANSPORTATION

CONCRETE PIPE INLETS

NO SCALE

RSP D75B DATED JUNE 6, 2008 SUPERSEDES STANDARD PLAN D75B
DATED MAY 1, 2006 - PAGE 153 OF THE STANDARD PLANS BOOK DATED MAY 2006.

REVISED STANDARD PLAN RSP D75B

2006 REVISED STANDARD PLAN RSP D75B

DIST	COUNTY	ROUTE	POST MILES TOTAL PROJECT	SHEET NO.	TOTAL SHEETS
03	ED	50	32.3/39.3	54	67

Raymond Don Tsztoo
REGISTERED CIVIL ENGINEER

January 18, 2008
PLANS APPROVAL DATE

REGISTERED PROFESSIONAL ENGINEER
Raymond Don Tsztoo
No. C37332
Exp. 6-30-08
CIVIL
STATE OF CALIFORNIA

The State of California or its officers or agents shall not be responsible for the accuracy or completeness of electronic copies of this plan sheet.

To accompany plans dated 5-10-10

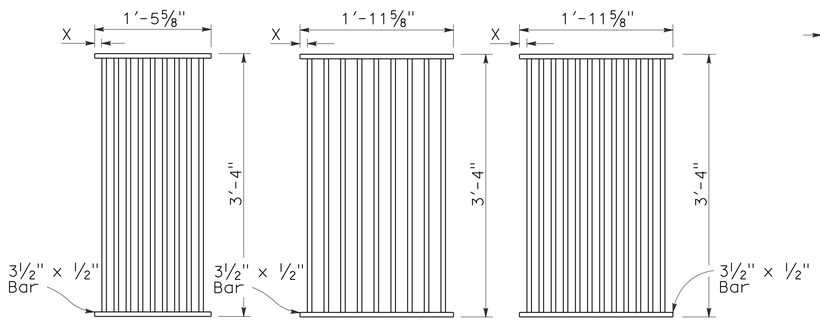

TYPE 18-9

1⅜" Clear spacing. Use within the roadbed on highways where bicycles and pedestrians are excluded.

TYPE 24-9

2" Clear spacing. Use in locations off the roadbed on all types of highways.

TYPE 24-12

1⅜" Clear spacing. Use within the roadbed on highways where bicycles and pedestrians are excluded.

RECTANGULAR GRATE DETAILS

(See table below)

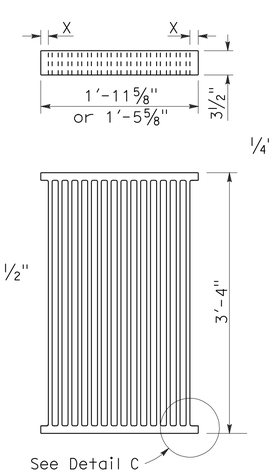

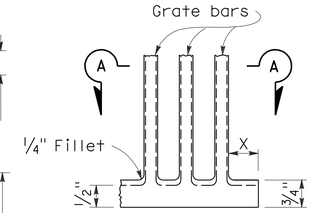

DETAIL C

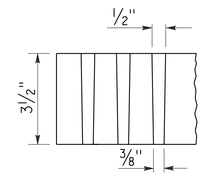

SECTION A-A

ALTERNATIVE CAST NODULAR IRON GRATE OR CAST STEEL GRATE

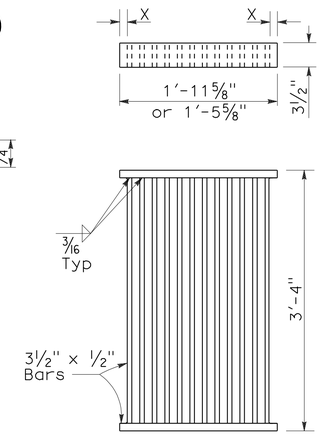

ALTERNATIVE WELDED GRATE

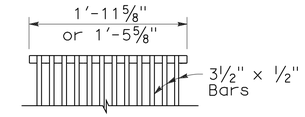

CAST END BLOCK

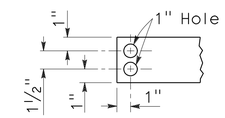

END OF BAR

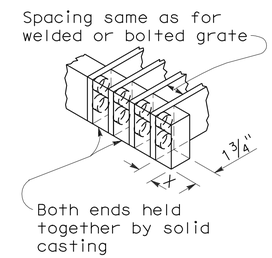

ALTERNATIVE CAST NODULAR IRON OR CAST STEEL END BLOCK GRATE

NOTES:

1. Grate type numbers refer to approximate width of grate in inches and number of bars, respectively.
2. Contractor has the option of using cast nodular iron, cast steel, welded, bolted, or cast end block grate.
3. See Special Provisions for requirements pertaining to galvanizing or asphalt dipping of grates and frames.
4. Rounded top of bars optional on all grates.
5. Pipe inlets with a grate shall be placed so that bars parallel direction of principle surface flow.
6. Full penetration butt welds may be substituted for the fillet welds on all anchors.
7. Standard square, hexagon, round or equivalent headed anchors may be substituted for the right angle hooks on the anchors shown on this plan.
8. Grate and frame weights are based on welded grates (weights of face angles, steps, protection bars, etc. are not included).

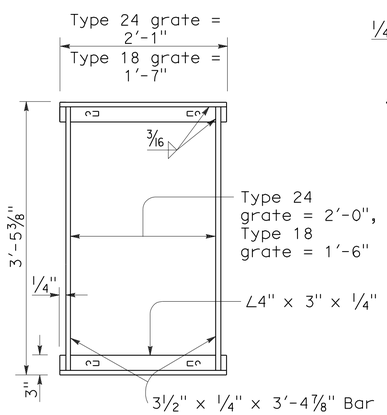

TYPICAL FRAME

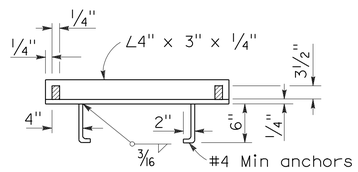

CROSS SECTION

(Thru frame)

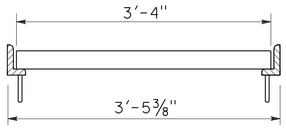

LONGITUDINAL SECTION

(Thru frame and grate)

RECTANGULAR FRAME DETAILS

(For all rectangular grates)

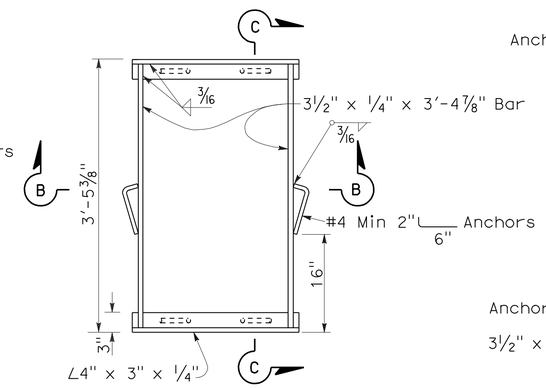

TYPICAL FRAME

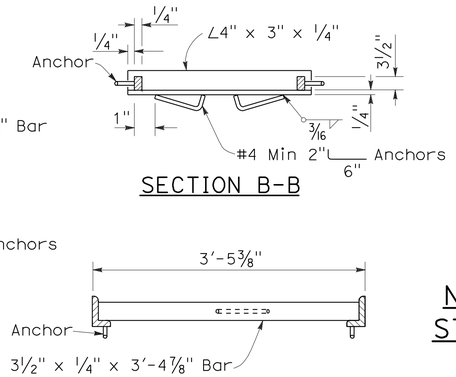

SECTION B-B

SECTION C-C

ALTERNATIVE ANCHOR FOR RECTANGULAR FRAME

(For details not shown, See Rectangular Frame Details)

INLET TYPE	GRATE TYPE	No. OF GRATES	WEIGHT LB
GDO	24-12	2	634
GOL-7	24-12	1	326
GOL-10	24-12	1	326
GO,G1,G2,G3,G4 (TYPE 24)	24-9	1	263
	24-12	1	326
G4 (TYPE 18),G5,G6	18-9	1	249
GT1	18-9	2	498
GT2	18-9	2	498
GT3	24-12	2	652
GT4	24-12	2	652
TRASH RACK			22

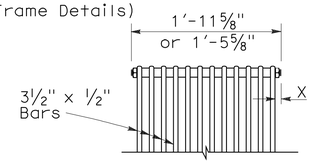

BOLTED END BLOCK

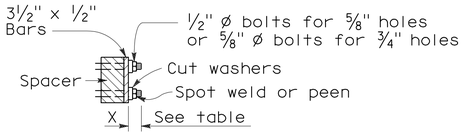

BOLTING DETAIL

ALTERNATIVE BOLTED GRATE

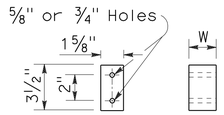

BAR SPACER

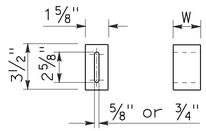

ALTERNATIVE SPACER

W = 1⅜" or 2"

GRATE BAR SPACING TABLE

TYPE	No. OF BARS	CLEAR BAR SPACING	X
18-9	9	1⅜"	1 1/16"
24-9	9	2"	1 9/16"
24-12	12	1⅜"	1¼"

INLET TYPE	COVER TYPE	WEIGHT LB
OS	PLATE	174
OL-7	PLATE	170
OL-10	PLATE	170
OL-14	PLATE	170
OL-21	PLATE	170
OCP	PLATE	112
OCPI	PLATE	112
OCPI	REDWOOD	42
OMP	PLATE	177
OMPI	PLATE	177

BASIS FOR MISC IRON & STEEL FINAL PAY WEIGHTS FOR DRAINAGE INLETS

(See General Notes, No 8)

STATE OF CALIFORNIA
DEPARTMENT OF TRANSPORTATION

GRATE DETAILS

NO SCALE

RSP D77A DATED JANUARY 18, 2008 SUPERSEDES STANDARD PLAN D77A DATED MAY 1, 2006 - PAGE 155 OF THE STANDARD PLANS BOOK DATED MAY 2006.

REVISED STANDARD PLAN RSP D77A

2006 REVISED STANDARD PLAN RSP D77A

12-14-07

DIST	COUNTY	ROUTE	POST MILES TOTAL PROJECT	SHEET NO.	TOTAL SHEETS
03	ED	50	32.3/39.3	55	67

Raymond Don Tsztoo
REGISTERED CIVIL ENGINEER

June 6, 2008
PLANS APPROVAL DATE

REGISTERED PROFESSIONAL ENGINEER
Raymond Don Tsztoo
No. C37332
Exp. 6-30-08
CIVIL
STATE OF CALIFORNIA

The State of California or its officers or agents shall not be responsible for the accuracy or completeness of electronic copies of this plan sheet.

To accompany plans dated 5-10-10

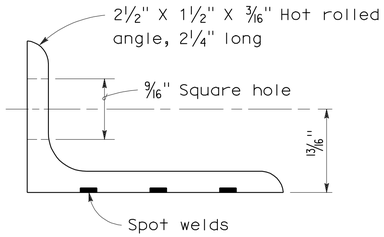

ANGLE

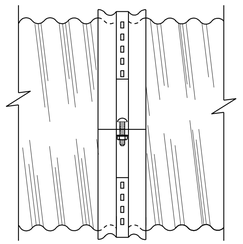

SIDE VIEW
ANGLE

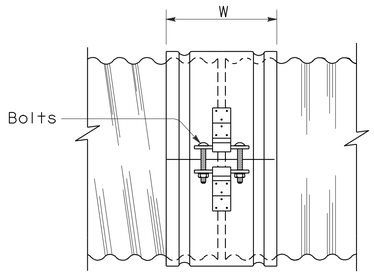

SIDE VIEW
SINGLE BAR AND STRAP

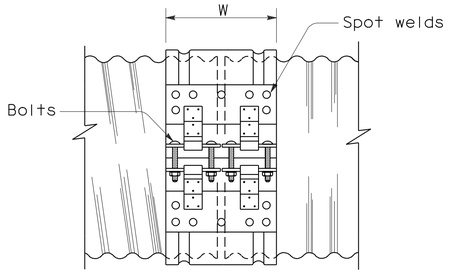

SIDE VIEW
DOUBLE BAR AND STRAP

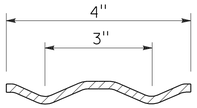

SECTION

H-4 HUGGER BAND

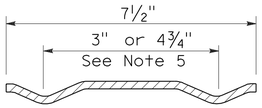

SECTION

H-7 HUGGER BAND

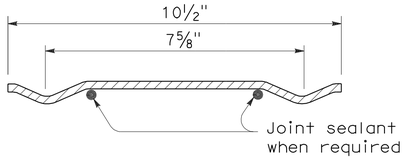

SECTION

H-10 HUGGER BAND

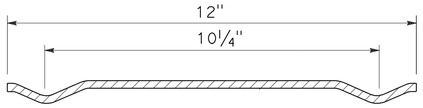

SECTION

H-12 HUGGER BAND

HUGGER COUPLING BANDS

NOTES:

1. All ferrous metal coupling band connection hardware shall be galvanized or electroplated in accordance with the Standard Specifications.
2. Dimensions and thicknesses shown are minimum.
3. Spot welds shall develop minimum required strength of strap.
4. Fillet welds of equivalent strength may be substituted for spot welds or rivets.
5. Dimension depends upon whether end condition is lips up or lips down.

STATE OF CALIFORNIA
DEPARTMENT OF TRANSPORTATION

CORRUGATED METAL PIPE COUPLING DETAILS No. 4 HUGGER COUPLING BANDS

NO SCALE

RSP D97D DATED JUNE 6, 2008 SUPERSEDES STANDARD PLAN D97D
DATED MAY 1, 2006 - PAGE 186 OF THE STANDARD PLANS BOOK DATED MAY 2006.

REVISED STANDARD PLAN RSP D97D

2006 REVISED STANDARD PLAN RSP D97D

3-24-08

DIST	COUNTY	ROUTE	POST MILES TOTAL PROJECT	SHEET NO.	TOTAL SHEETS
03	ED	50	32.3/39.3	56	67

Raymond Don Tsztoo
REGISTERED CIVIL ENGINEER

June 6, 2008
PLANS APPROVAL DATE

REGISTERED PROFESSIONAL ENGINEER Raymond Don Tsztoo No. C37332 Exp. 6-30-08 CIVIL STATE OF CALIFORNIA

The State of California or its officers or agents shall not be responsible for the accuracy or completeness of electronic copies of this plan sheet.

ANNULAR AND HELICAL PROFILE

COUPLING TYPE	PIPE CORRUGATION	PIPE SIZE	W OR A	PIPE WALL THICKNESS CSP	PIPE WALL THICKNESS CAP	BAND THICKNESS CSP	BAND THICKNESS CAP	BAR AND STRAP (CSP ONLY) STRAP THICKNESS	BOLTS Dia	BAR Dia	BAR YIELD STRENGTH	ANGLE DIMENSIONS CSP	ANGLE DIMENSIONS CAP	BOLTS (No.- Dia) CSP	BOLTS (No.- Dia) CAP	RIVETS ANGLE TO BAND CSP	RIVETS ANGLE TO BAND CAP	SPOT WELDS ANGLE TO BAND CSP
TWO PIECE INTEGRAL FLANGE	1½′ × ¼"	6"-10"	7"	0.052"-0.079"	0.048"-0.060"	0.052"	0.060"							2-⅜"	2-⅜"			
		12"-18"	7"	0.052"-0.079"		0.064"								2-½"				
	2⅔" × ½"	12"-24"	7"	0.052"-0.079"	0.060"-0.105"	0.064"	0.060"							2-½"	2-½"			
UNIVERSAL	2⅔" × ½"	THROUGH 36"	12"	0.052"-0.138"	0.060"-0.135"	0.052"	0.060"					2" × 2" × 3/16"	2" × 2" × 3/16"	3-½"	3-½"	3-⅜"	3-⅜"	3-½"
		42"-60"	12"	0.052"-0.168"	0.075"-0.164"	0.052"	0.060"					2" × 2" × 3/16"	2" × 2" × 3/16"	3-½"	3-½"	3-⅜"	3-⅜"	5-½"
		THROUGH 72"	12"	0.052"-0.168"	0.164"	0.052"	0.105"	0.079"	½"	⅞"	32 ksi	2" × 2" × 3/16"	2" × 2" × 3/16"	3-½"	3-½"	3-⅜"	3-⅜"	5-½"
		78"-84"	16¼"	0.168"		0.079"		DOUBLE 0.079"	½"	⅞"	32 ksi							
ANNULAR	2⅔" × ½"	THROUGH 36"	7"	0.064"-0.138"	0.060"-0.135"	0.052"	0.060"	0.079"	½"	⅞"	32 ksi	2" × 2" × 3/16"	2" × 2" × 3/16"	2-½"	2-½"	3-⅜"	3-⅜"	3-½"
		42"-72"	12"	0.064"-0.168"	0.075"-0.164"	0.052"	0.105"	0.079"	½"	⅞"	32 ksi	2" × 2" × 3/16"	2" × 2" × 3/16"	3-½"	3-½"	3-⅜"	3-⅜"	5-½"
		78"-84"	12"	0.168"		0.079"		0.109"	½"	⅞"	45 ksi	2" × 2" × 3/16"		3-½"		3-⅜"		5-½"
	3" × 1"	48"-90"	14"	0.064"-0.109"		0.052"		0.079"	½"	⅞"	32 ksi	2" × 2" × 3/16"		3-½"		3-⅜"		5-½"
		96"-120"	14"	0.079"-0.109"		0.052"		0.109"	½"	⅞"	45 ksi	2" × 2" × 3/16"		3-½"		4-⅜"		
		42"-108"	14"		0.060"-0.135"		0.060"						2" × 2" × 3/16"		3-½"		3-⅜"	
HELICAL	2⅔" × ½"	THROUGH 36"	12"	0.052"-0.138"	0.060"-0.135"	0.052"	0.060"	0.079"	½"	⅞"	32 ksi	2" × 2" × 3/16"	2" × 2" × 3/16"	3-½"	3-½"	3-⅜"	3-⅜"	3-½"
		42"-72"	12"	0.052"-0.168"	0.075"-0.164"	0.052"	0.060"	0.079"	½"	⅞"	32 ksi	2" × 2" × 3/16"	2" × 2" × 3/16"	3-½"	3-½"	3-⅜"	3-⅜"	5-½"
		78"-84"	12"	0.168"		0.079"		0.109"	½"	⅞"	45 ksi	2" × 2" × 3/16"		3-½"		3-⅜"		5-½"
	3" × 1"	48"-90"	14"	0.064"-0.109"		0.052"		0.079"	½"	⅞"	32 ksi	2" × 2" × 3/16"		3-½"		3-⅜"		5-½"
		96"-120"	14"	0.079"-0.109"		0.052"		0.109"	½"	⅞"	45 ksi	2" × 2" × 3/16"		3-½"		4-⅜"		
		42"-108"	14"		0.060"-0.135"		0.060"						2" × 2" × 3/16"		3-½"		3-⅜"	
HUGGER	2⅔" × ½" REROLLED END	12"-54"	4"	0.052"-0.109"		0.052"						2½" × 1½" × 3/16"	2½" × 1½" × 3/16"	1-½"				3-½"
		60"-66"	4"	0.109"		0.064"						2½" × 1½" × 3/16"	2½" × 1½" × 3/16"	1-½"				3-½"
		36"-48"	4"	0.138"		0.064"						2½" × 1½" × 3/16"	2½" × 1½" × 3/16"	1-½"				3-½"
		THROUGH 72"	10½"	0.052"-0.168"		0.052"		0.079"	½"	⅞"	32 ksi							
		78"-84"	10½"	0.168"		0.079"		0.109"	½"	⅞"	45 ksi							
	3" × 1" REROLLED END	48"-90"	10½"	0.064"-0.109"		0.052"		0.079"	½"	⅞"	32 ksi							
		96"-120"	10½"	0.079"-0.109"		0.052"		0.109"	½"	⅞"	45 ksi							
	5" × 1" REROLLED END	48"-66"	7½"	0.064"-0.109"		0.064"		0.079"	½"	⅞"	32 ksi	2½" × 1½" × 3/16"	2½" × 1½" × 3/16"	1-½"				3-½"
		72"-90"	7½"	0.064"-0.079"		0.064"		0.079"	½"	⅞"	32 ksi	2½" × 1½" × 3/16"	2½" × 1½" × 3/16"	1-½"				3-½"
		48"-90"	7½"	0.064"-0.138"		0.064"		0.079"	½"	⅞"	32 ksi							
		48"-120"	12" SEE	0.064"-0.109"		0.064"		0.079"	½"	⅞"	32 ksi							
		48"-84"	12" NOTE	0.138"		0.064"		0.079"	½"	⅞"	32 ksi							
		90"-120"	12" 11	0.138"		0.064"		DOUBLE 0.079"	½"	⅞"	32 ksi							

SPIRAL RIB PROFILE

COUPLING TYPE	PIPE CORRUGATION	PIPE SIZE	W	PIPE WALL THICKNESS SSRP	PIPE WALL THICKNESS ASRP	BAND THICKNESS SSRP	BAND THICKNESS ASRP	BAR AND STRAP (SSRP ONLY) STRAP THICKNESS	BOLTS Dia	BAR Dia	BAR YIELD STRENGTH	ANGLE DIMENSIONS SSRP	ANGLE DIMENSIONS ASRP	BOLTS (No.- Dia) SSRP	BOLTS (No.- Dia) ASRP	RIVETS ANGLE TO BAND SSRP	RIVETS ANGLE TO BAND ASRP	SPOT WELDS ANGLE TO BAND SSRP
ANNULAR	2⅔" × ½" * REROLLED END	24"-36"	12"	0.064"-0.109"	0.060"-0.105"	0.052"	0.060"	0.079"	½"	⅞"	32 ksi	2" × 2" × 3/16"	2" × 2" × 3/16"	3-½"	3-½"	3-⅜"	3-⅜"	5-½"
		42"-60"	12"	0.064"-0.109"	0.075"-0.105"	0.052"	0.105"	0.079"	½"	⅞"	32 ksi	2" × 2" × 3/16"	2" × 2" × 3/16"	3-½"	3-½"	3-⅜"	3-⅜"	5-½"
		66"-72"	12"	0.064"-0.109"		0.052"		0.079"	½"	⅞"	32 ksi	2" × 2" × 3/16"	2" × 2" × 3/16"	3-½"	3-½"	3-⅜"	3-⅜"	5-½"
		78"-114"	12"	0.079"-0.109"		0.079"		0.109"	½"	⅞"	45 ksi	2" × 2" × 3/16"	2" × 2" × 3/16"	3-½"	3-½"	3-⅜"	3-⅜"	5-½"
HUGGER	2⅔" × ½" * REROLLED END	24"-72"	10½"	0.064"-0.109"		0.052"		0.079"	½"	⅞"	32 ksi							
		78"-84"	10½"	0.109"		0.079"		0.109"	½"	⅞"	45 ksi							

* See Note 14.

14. All profiles of Spiral Rib Pipe (¾" × ¾" ribs at 7½" pitch and ¾" × 1" ribs at 11½" pitch in both steel and aluminum and ¾" × 1" ribs at 8½" pitch in steel only) shall be manufactured with rerolled ends. Corrugation profile of the rerolled ends shall be 2⅔" × ½" annual corrugations with a minimum of two full corrugations at each end.

NOTES:

To accompany plans dated 5-10-10

1. All ferrous metal coupling band connection hardware shall be galvanized or electroplated in accordance with the Standard Specifications.
2. For helically corrugated coupling bands, the connection angles may be oriented parallel to the pipe axis, provided connecting holes are slotted lengthwise sufficiently to allow adjustment for the helix angle.
3. Tension strap may be connected to band with either spot welds or fillet welds that develop minimum required strength of strap.
4. Use 1¼" gage line dimension on attached angle leg for rivets and spot welds.
5. Band thickness shall not be less than:
   a. 3 standard thicknesses lighter than the thickness of the pipe for Corrugated Steel Pipe.
   b. 2 standard thicknesses lighter than the thickness of the pipe and in no case lighter than 0.060" for Corrugated Aluminum Pipe.
6. Dimensions, thicknesses and strengths shown are minimum.
7. For pipe arches use same width band as for round pipe of equal periphery.
8. Fillet welds of equivalent strenght may be substituted for spot welds or rivets.
9. Spot welds shall develop minimum required strength of strap.
10. Pipe with rerolled ends having at least two 2⅔" × ½" annular corrugations at each end with or without an upturned flange may be connected with any of the annular coupling bands shown for pipe of the same diameter and wall thickness and having 2⅔" × ½" corrugations.
11. In the case of H-12 huggerbands, two piece bands are required for diameters through 96" and three piece bands are required for diameters 102" through 120".
12. Two piece bands are required for pipes greater than 42" diameter.
13. The 2¼" × 2" × 0.109" thick galvanized die-formed angle connector may be used in lieu of the 2" × 2" × 3/16" angle connector for standard joints only on pipes through 72" diameter.

STATE OF CALIFORNIA
DEPARTMENT OF TRANSPORTATION

CORRUGATED METAL PIPE COUPLING DETAILS No. 5 STANDARD JOINT

NO SCALE

RSP D97E DATED JUNE 6, 2008 SUPERSEDES STANDARD PLAN D97E
DATED MAY 1, 2006 - PAGE 187 OF THE STANDARD PLANS BOOK DATED MAY 2006.

REVISED STANDARD PLAN RSP D97E

2006 REVISED STANDARD PLAN RSP D97E

4-2-08

DIST	COUNTY	ROUTE	POST MILES TOTAL PROJECT	SHEET NO.	TOTAL SHEETS
03	ED	50	32.3/39.3	57	67

Raymond Don Tsztoo
REGISTERED CIVIL ENGINEER

June 6, 2008
PLANS APPROVAL DATE

REGISTERED PROFESSIONAL ENGINEER Raymond Don Tsztoo No. C37332 Exp. 6-30-08 CIVIL STATE OF CALIFORNIA

The State of California or its officers or agents shall not be responsible for the accuracy or completeness of electronic copies of this plan sheet.

To accompany plans dated 5-10-10

ANNULAR AND HELICAL PROFILE

COUPLING TYPE	PIPE CORRUGATION	PIPE SIZE	W OR A	PIPE WALL THICKNESS CSP	PIPE WALL THICKNESS CAP	BAND THICKNESS CSP	BAND THICKNESS CAP	BAR AND STRAP (CSP ONLY) STRAP THICKNESS	BOLTS Dia	BAR Dia	BAR YIELD STRENGTH	ANGLE DIMENSIONS CSP	ANGLE DIMENSIONS CAP	BOLTS (No. - Dia) CSP	BOLTS (No. - Dia) CAP	RIVETS ANGLE TO BAND CSP	RIVETS ANGLE TO BAND CAP	SPOT WELDS ANGLE TO BAND CSP
TWO PIECE INTEGRAL FLANGE	1½" × ¼"	6"-10"	7"	0.064"-0.079"	0.060"	0.064"	0.060"							2-⅜"	2-⅜"			
	2⅔" × ½"	12"-24"	12"		0.060"-0.105"		0.060"								3-½"			
UNIVERSAL	2⅔" × ½"	THROUGH 36"	12"	0.064"-0.138"	0.060"-0.135"	0.064"	0.060"	0.079"	½"	⅞"	32 ksi	2" × 2" × 3/16"	2" × 2" × 3/16"	3-½"	3-½"	3-⅜"	3-⅜"	5-½"
		42"-60"	16¼"	0.064"-0.168"	0.060"-0.164"	0.064"	0.060"	DOUBLE 0.079"	½"	⅞"	32 ksi	2" × 2" × ¼"	2" × 2" × ¼"	4-½"	4-½"	5-⅜"	5-⅜"	
ANNULAR	2⅔" × ½"	THROUGH 36"	12"	0.064"-0.138"	0.060"-0.135"	0.064"	0.060"					2" × 2" × 3/16"	2" × 2" × 3/16"	3-½"	3-½"	3-⅜"	3-⅜"	5-½"
		42"-60"	12"	0.064"-0.079"		0.064"						2" × 2" × 3/16"		3-½"		3-⅜"		5-½"
		42"-60"	12"	0.109"-0.168"	0.135"-0.164"	0.064"	0.075"					2" × 2" × ¼"	2" × 2" × ¼"	3-½"	3-½"	5-⅜"	5-⅜"	
		66"-72"	24"		0.164"		0.105"						2" × 2" × ¼"		5-½"		5-½"	
		66"-84"	24"	0.109"-0.168"		0.064"						2" × 2" × ¼"		5-½"		7-⅜"		
		42"-54"	12"		0.060"-0.105"		0.060"						2" × 2" × 3/16"		3-½"		3-⅜"	
	3" × 1"	48"-60"	14"	0.064"-0.079"		0.064"						2" × 2" × 3/16"		3-½"		3-⅜"		5-½"
		48"-60"	14"	0.109"		0.064"						2" × 2" × 3/16"		3-½"		5-⅜"		
		66"-120"	25"	0.064"-0.109"		0.064"						2" × 2" × 3/16"		5-½"		9-⅜"		
		42"-60"	14"		0.060"-0.105"		0.060"						2" × 2" × 3/16"		3-½"		5-⅜"	
		42"-60"	14"		0.135"		0.075"						2" × 2" × ¼"		3-½"		5-⅜"	
		66"-96"	25"		0.060"-0.135"		0.060"						2" × 2" × ¼"		5-½"		7-⅜"	
		96"-108"	25"		0.135"		0.075"						2" × 2" × ¼"		5-½"		7-⅜"	
HELICAL	2⅔" × ½"	THROUGH 36"	12"	0.064"-0.138"	0.060"-0.135"	0.064"	0.060"					2" × 2" × 3/16"	2" × 2" × 3/16"	3-½"	3-½"	3-⅜"	3-⅜"	5-½"
		42"-54"	12"		0.060"-0.105"		0.060"						2" × 2" × 3/16"		3-½"		3-⅜"	
		42"-60"	12"	0.064"-0.079"		0.064"						2" × 2" × 3/16"		3-½"		3-⅜"		5-½"
		42"-60"	12"	0.109"-0.168"	0.135"-0.164"	0.064"	0.075"					2" × 2" × ¼"	2" × 2" × ¼"	3-½"	3-½"	5-⅜"	5-⅜"	
		66'-84"	24"	0.109"-0.168"		0.064"						2" × 2" × ¼"		5-½"		7-⅜"		
		66"-72"	24"		0.164"		0.105"						2" × 2" × ¼"		5-½"		5-⅜"	
	3" × 1"	48"-60"	14"	0.064"-0.079"		0.064"						2" × 2" × 3/16"		3-½"		3-⅜"		5-½"
		48"-60"	14"	0.109"		0.064"						2" × 2" × 3/16"		3-½"		5-⅜"		
		66"-120"	25"	0.064"-0.109"		0.064"						2" × 2" × 3/16"		5-½"		9-⅜"		
		42"-60"	14"		0.060"-0.105"		0.060"						2" × 2" × 3/16"		3-½"		5-⅜"	
		42"-60"	14"		0.135"		0.075"						2" × 2" × ¼"		3-½"		5-⅜"	
		66"-96"	25"		0.060"-0.135"		0.060"						2" × 2" × ¼"		5-½"		7-⅜"	
		96"-108"	25"		0.135"		0.075"						2" × 2" × ¼"		5-½"		7-⅜"	
HUGGER	2⅔" × ½" REROLLED END	THROUGH 48"	10½"	0.109"		0.064"		0.079"	½"	⅞"	32 ksi							
		54"- 66"	10½"	0.109"		0.064"		DOUBLE 0.079"	½"	⅞"	32 ksi							
		THROUGH 54"	10½"	0.064"-0.079"		0.064"		0.079"	½"	⅞"	32 ksi							
		THROUGH 60"	10½"	0.138"		0.079"		DOUBLE 0.079"	½"	⅞"	32 ksi							
		66"-72"	10½"	0.138"		0.109"		DOUBLE 0.079"	½"	⅞"	32 ksi							
		THROUGH 72"	10½"	0.168"		0.109"		DOUBLE 0.109"	½"	⅞"	45 ksi							
	3" × 1" REROLLED END	48"-84"	10½"	0.109"		0.079"		DOUBLE 0.079"	½"	⅞"	32 ksi							
		48"-90"	10½"	0.064"-0.079"		0.064"		DOUBLE 0.079"	½"	⅞"	32 ksi							
		96"-102"	10½"	0.079"		0.079"		DOUBLE 0.079"	½"	⅞"	32 ksi							
		90"-120"	10½"	0.109"		0.109"		DOUBLE 0.109"	½"	⅞"	45 ksi							

SPIRAL RIB PROFILE

COUPLING TYPE	PIPE CORRUGATION	PIPE SIZE	W	PIPE WALL THICKNESS SSRP	PIPE WALL THICKNESS ASRP	BAND THICKNESS SSRP	BAND THICKNESS ASRP	BAR AND STRAP (SSRP ONLY) STRAP THICKNESS	BOLTS Dia	BAR Dia	BAR YIELD STRENGTH	ANGLE DIMENSIONS SSRP	ANGLE DIMENSIONS ASRP	BOLTS (No.- Dia) SSRP	BOLTS (No.- Dia) ASRP	RIVETS ANGLE TO BAND SSRP	RIVETS ANGLE TO BAND ASRP	SPOT WELDS ANGLE TO BAND SSRP
ANNULAR	2⅔" × ½" * REROLLED END	24"-36"	12"	0.064"-0.109"	0.060"-0.105"	0.064"	0.060"	0.079"	½"	⅞"	32 ksi	2" × 2" × 3/16"	2" × 2" × 3/16"	3-½"	3-½"	3-⅜"	3-⅜"	5-½"
		42"-60"	12"	0.064"-0.079"	0.075"-0.105"	0.064"	0.075"	0.079"	½"	⅞"	32 ksi	2" × 2" × 3/16"	2" × 2" × 3/16"	3-½"	3-½"	3-⅜"	3-⅜"	5-½"
		42"-60"	12"	0.109"		0.064"		0.079"	½"	⅞"	32 ksi	2" × 2" × ¼"		3-½"		5-⅜"		
		66"-84"	24"	0.109"		0.064"		0.079"	½"	⅞"	32 ksi	2" × 2" × ¼"		5-½"		7-⅜"		
HUGGER	2⅔" × ½" * REROLLED END	24"-54"	10½"	0.064"-0.079"		0.064"		0.079"	½"	⅞"	32 ksi							
		24"-48"	10½"	0.109"		0.064"		0.079"	½"	⅞"	32 ksi							
		54"-66"	10½"	0.109"		0.064"		Double 0.079"	½"	⅞"	32 ksi							

* See Note 13.

NOTES:

1. All ferrous metal coupling band connection hardware shall be galvanized or electro-plated in accordance with the Standard Specifications.
2. For helically corrugated coupling bands, the connection angles may be oriented parallel to the pipe axis, provided connecting holes are slotted lengthwise sufficiently to allow adjustment for the helix angle.
3. Tension strap may be connected to band with either spot welds or fillet welds that develop minimum required strength of strap.
4. Use 1¼" gage line dimension on attached angle leg for rivets and spot welds.
5. Band thickness shall not be less than:
   a. 3 standard thicknesses lighter than the thickness of the pipe for Corrugated Steel Pipe.
   b. 2 standard thicknesses lighter than the thickness of the pipe and in no case lighter than 0.060" for Corrugated Aluminum Pipe.
6. Dimensions, thicknesses and strengths shown are minimum.
7. For pipe arches use same width band as for round pipe of equal periphery.
8. Fillet welds of equivalent strength may be substituted for spot welds or rivets.
9. Spot welds shall develop minimum required strength of strap.
10. Pipe with rerolled ends having at least two 2⅔" × ½" annular corrugations at each end with or without an upturned flange may be connected with any of the annular coupling bands shown for pipe of the same diameter and wall thickness and having 2⅔" × ½" corrugations.
11. In the case of H-12 huggerbands, two piece bands are required for diameters through 96" and three piece bands are required for diameters 102" through 120".
12. Two piece bands are required for pipes greater than 42" diameter.
13. All profiles of Spiral Rib Pipe (¾" × ¾" ribs at 7½" pitch and ¾" × 1" ribs at 11½" pitch in both steel and aluminum and ¾" × 1" ribs at 8½" pitch in steel only) shall be manufactured with rerolled ends. Corrugation profile of the rerolled ends shall be 2⅔" × ½" annual corrugations with a minimum of two full corrugations at each end.

STATE OF CALIFORNIA
DEPARTMENT OF TRANSPORTATION

CORRUGATED METAL PIPE COUPLING DETAILS No. 6 POSITIVE JOINT

NO SCALE

RSP D97F DATED JUNE 6, 2008 SUPERSEDES STANDARD PLAN D97F
DATED MAY 1, 2006 - PAGE 188 OF THE STANDARD PLANS BOOK DATED MAY 2006.

REVISED STANDARD PLAN RSP D97F

2006 REVISED STANDARD PLAN RSP D97F

4-2-08

DIST	COUNTY	ROUTE	POST MILES TOTAL PROJECT	SHEET NO.	TOTAL SHEETS
03	ED	50	32.3/39.3	58	67

Raymond Don Tsztoo
REGISTERED CIVIL ENGINEER

June 6, 2008
PLANS APPROVAL DATE

REGISTERED PROFESSIONAL ENGINEER
Raymond Don Tsztoo
No. C37332
Exp. 6-30-08
CIVIL
STATE OF CALIFORNIA

The State of California or its officers or agents shall not be responsible for the accuracy or completeness of electronic copies of this plan sheet.

To accompany plans dated 5-10-10

ANNULAR AND HELICAL PROFILE

COUPLING TYPE	PIPE CORRUGATION	PIPE SIZE	W OR A	PIPE WALL THICKNESS		BAND THICKNESS		BAR AND STRAP (CSP ONLY)			ANGLE						
											DIMENSIONS		BOLTS (No.- Dia)		RIVETS ANGLE TO BAND		SPOT WELDS ANGLE TO BAND
				CSP	CAP	CSP	CAP	STRAP THICKNESS	BOLTS Dia	BAR Dia	CSP	CAP	CSP	CAP	CSP	CAP	CSP
TWO PIECE INTEGRAL FLANGE	1½′ × ¼"	6"	7"	0.064"-0.168"		0.052"							3-⅜"				
	1½′ × ¼"	8"-10"	7"	0.064"-0.168"	0.060"-0.164"	0.064"	0.060"						3-⅜"	3-⅜"			
ANNULAR	2⅔" × ½"	THROUGH 24"	12"	0.064"-0.168"	0.060"-0.164"	0.064"	0.060"				2" × 2" × 3/16"	2" × 2" × 3/16"	3-½"	3-½"	3-⅜"	3-⅜"	3-½"
HUGGER	2⅔" × ½" REROLLED END	THROUGH 24"	10½"	0.064"-0.168"		0.064"		0.079"	½"	⅞"							

SPIRAL RIB PROFILE

COUPLING TYPE	PIPE CORRUGATION	PIPE SIZE	W	PIPE WALL THICKNESS		BAND THICKNESS		BAR AND STRAP (SSRP ONLY)			ANGLE						
											DIMENSIONS		BOLTS (No.- Dia)		RIVETS ANGLE TO BAND		SPOT WELDS ANGLE TO BAND
				SSRP	ASRP	SSRP	ASRP	STRAP THICKNESS	BOLTS Dia	BAR Dia	SSRP	ASRP	SSRP	ASRP	SSRP	ASRP	SSRP
ANNULAR	2⅔" × ½" * REROLLED END	24"	12"	0.064"-0.168"	0.060"-0.164"	0.064"	0.060"				2" × 2" × 3/16"	2" × 2" × 3/16"	3-½"	3-½"	3-⅜"	3-⅜"	3-½"
HUGGER	2⅔" × ½" * REROLLED END	24"	10½"	0.064"-0.168"		0.064"		0.079"	½"	⅞"							

* See Note 12.

12. All profiles of Spiral Rib Pipe (¾" × ¾" ribs at 7½" pitch and ¾" × 1" ribs at 11½" pitch in both steel and aluminum and ¾" × 1" ribs at 8½" pitch in steel only) shall be manufactured with rerolled ends. Corrugation profile of the rerolled ends shall be 2⅔" × ½" annual corrugations with a minimum of two full corrugations at each end.

NOTES:

1. All ferrous metal coupling band connection hardware shall be galvanized or electro-plated in accordance with the Standard Specifications.
2. For helically corrugated coupling bands, the connection angles may be oriented parallel to the pipe axis, provided connecting holes are slotted lengthwise sufficiently to allow adjustment for the helix angle.
3. Tension strap may be connected to band with either spot welds or fillet welds that develop minimum required strength of strap.
4. Use 1¼" gage line dimension on attached angle leg for rivets and spot welds.
5. Band thickness shall not be less than:
   a. 3 standard thicknesses lighter than the thickness of the pipe for Corrugated Steel Pipe.
   b. 2 standard thicknesses lighter than the thickness of the pipe and in no case lighter than 0.060" for Corrugated Aluminum Pipe.
6. Dimensions, thicknesses and strengths shown are minimum.
7. For pipe arches use same width band as for round pipe of equal periphery.
8. Fillet welds of equivalent strenght may be substituted for spot welds or rivets.
9. Spot welds shall develop minimum required strength of strap.
10. Pipe with rerolled ends having at least two 2⅔" × ½" annular corrugations at each end with or without an upturned flange may be connected with any of the annular coupling bands shown for pipe of the same diameter and wall thickness and having 2⅔" × ½" corrugations.
11. For downdrain applications, two piece integral flange couplers shall have factory applied sleeve type rubber gaskets with a minimum length of 7" measured along the length of the pipe.

STATE OF CALIFORNIA
DEPARTMENT OF TRANSPORTATION

CORRUGATED METAL PIPE COUPLING DETAILS No. 7 DOWNDRAIN

NO SCALE

RSP D97G DATED JUNE 6, 2008 SUPERSEDES STANDARD PLAN D97G
DATED MAY 1, 2006 - PAGE 189 OF THE STANDARD PLANS BOOK DATED MAY 2006.

REVISED STANDARD PLAN RSP D97G

2006 REVISED STANDARD PLAN RSP D97G

4-4-08

DIST	COUNTY	ROUTE	POST MILES TOTAL PROJECT	SHEET NO.	TOTAL SHEETS
03	ED	50	32.3/39.3	59	67

Randell D. Hiatt
REGISTERED CIVIL ENGINEER

June 6, 2008
PLANS APPROVAL DATE

REGISTERED PROFESSIONAL ENGINEER
Randell D. Hiatt
No. C50200
Exp. 6-30-09
CIVIL
STATE OF CALIFORNIA

The State of California or its officers or agents shall not be responsible for the accuracy or completeness of electronic copies of this plan sheet.

To accompany plans dated 5-10-10

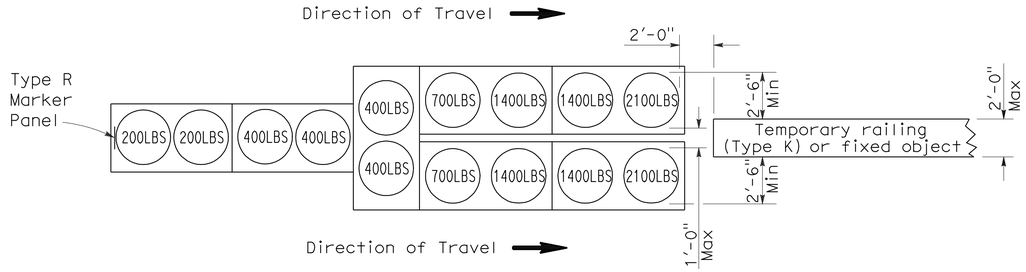

ARRAY 'TU14'

Approach speed 45 mph or more

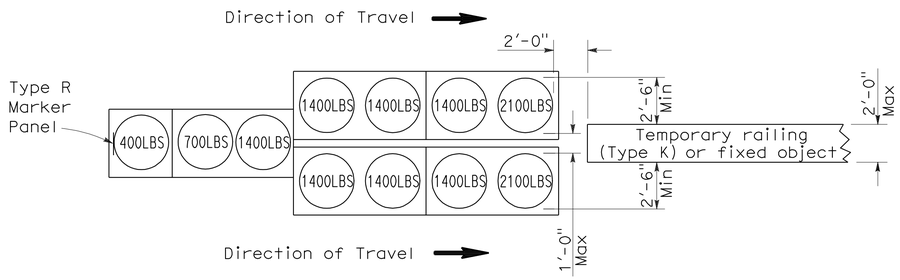

ARRAY 'TU11'

Approach speed less than 45 mph

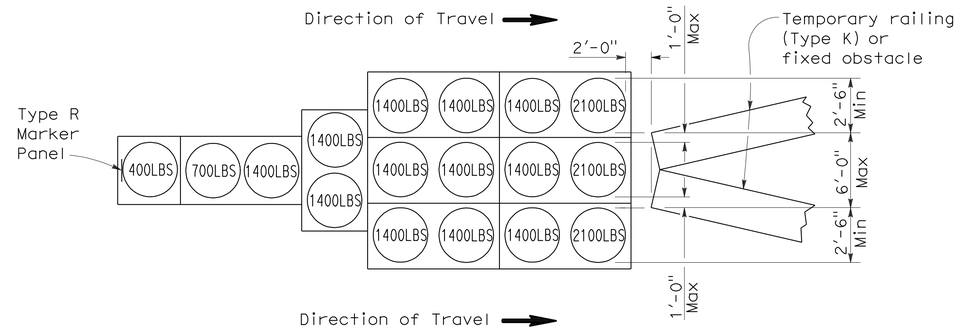

ARRAY 'TU17'

Approach speed less than 45 mph

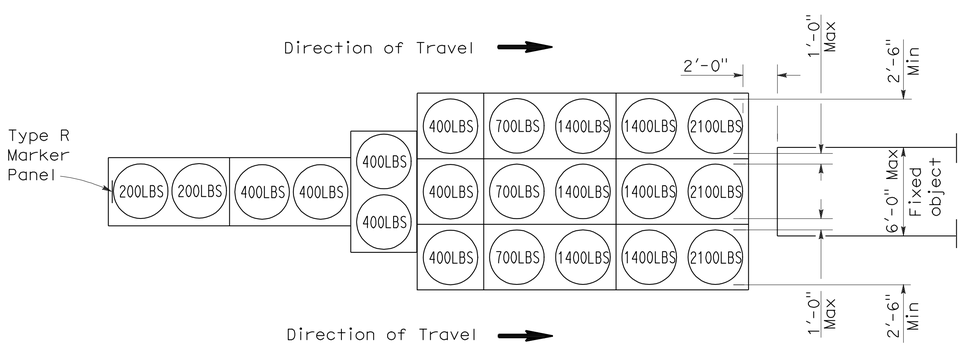

ARRAY 'TU21'

Approach speed 45 mph or more

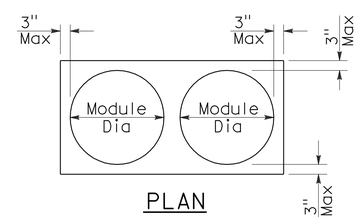

PLAN

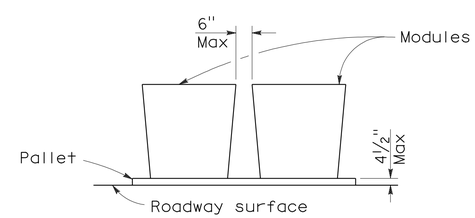

ELEVATION

CRASH CUSHION PALLET DETAIL

See Note 7

NOTES:

1. (XXX) Indicates sand filled module location and weight of sand in pounds for each module. Module spacing is based on the greater diameter of the module.
2. All sand weights are nominal.
3. Temporary crash cushion arrays shall not encroach on the traveled way.
4. Place the top of Type R marker panel 1" below the module lid.
5. Refer to Standard Plan A73B for marker details.
6. Approach speeds indicated conform to NCHRP 350 Report criteria.
7. Use of pallets is optional.

STATE OF CALIFORNIA
DEPARTMENT OF TRANSPORTATION

TEMPORARY CRASH CUSHION, SAND FILLED (UNIDIRECTIONAL)

NO SCALE

RSP T1A DATED JUNE 6, 2008 SUPERSEDES STANDARD PLAN T1A
DATED MAY 1, 2006 - PAGE 211 OF THE STANDARD PLANS BOOK DATED MAY 2006.

REVISED STANDARD PLAN RSP T1A

2006 REVISED STANDARD PLAN RSP T1A

DIST	COUNTY	ROUTE	POST MILES TOTAL PROJECT	SHEET NO.	TOTAL SHEETS
03	ED	50	32.3/39.3	60	67

Randell D. Hiatt
REGISTERED CIVIL ENGINEER

June 6, 2008
PLANS APPROVAL DATE

REGISTERED PROFESSIONAL ENGINEER
Randell D. Hiatt
No. C50200
Exp. 6-30-09
CIVIL
STATE OF CALIFORNIA

The State of California or its officers or agents shall not be responsible for the accuracy or completeness of electronic copies of this plan sheet.

To accompany plans dated 5-10-10

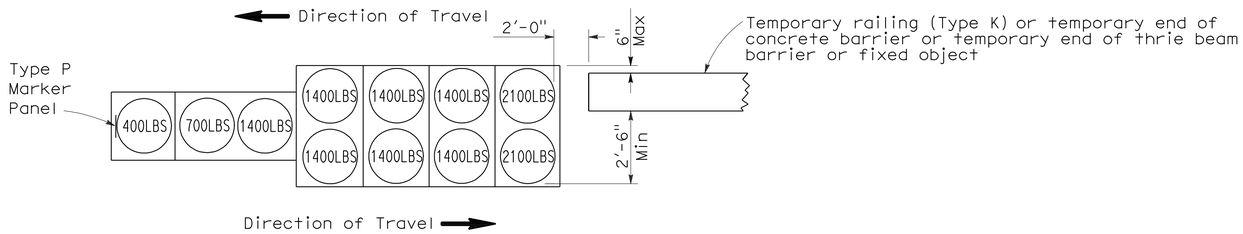

ARRAY 'TB11'

Approach speed less than 45 mph

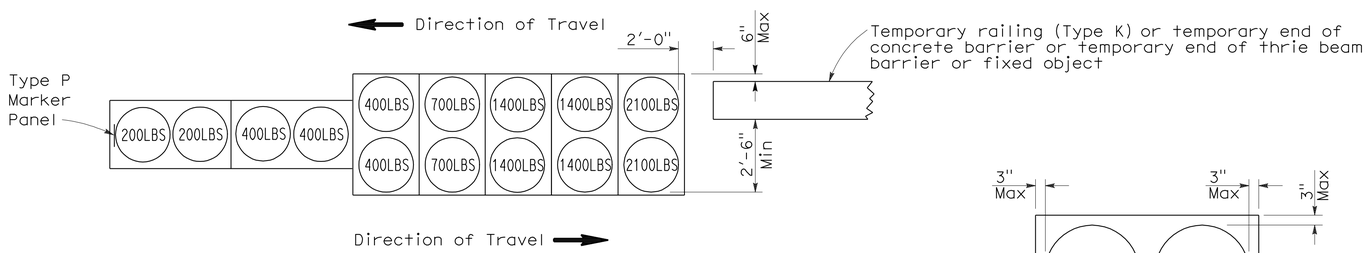

ARRAY 'TB14'

Approach speed 45 mph or more

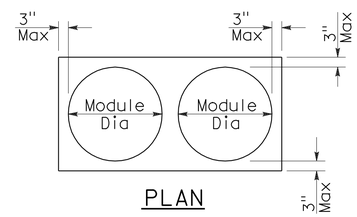

PLAN

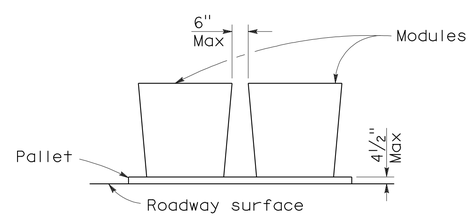

ELEVATION

CRASH CUSHION PALLET DETAIL

See Note 7

NOTES:

1. (XXX) Indicates sand filled module location and weight of sand in pounds for each module. Module spacing is based on the greater diameter of the module.
2. All sand weights are nominal.
3. Temporary crash cushion arrays shall not encroach on the traveled way.
4. Place the Type P marker panel so that the bottom of the panel rests upon the pallet.
5. Refer to Standard Plan A73B for marker details.
6. Approach speeds indicated conform to NCHRP 350 Report criteria.
7. Use of pallets is optional.

STATE OF CALIFORNIA
DEPARTMENT OF TRANSPORTATION

TEMPORARY CRASH CUSHION, SAND FILLED (BIDIRECTIONAL)

NO SCALE

RSP T1B DATED JUNE 6, 2008 SUPERSEDES STANDARD PLAN T1B
DATED MAY 1, 2006 - PAGE 212 OF THE STANDARD PLANS BOOK DATED MAY 2006.

REVISED STANDARD PLAN RSP T1B

2006 REVISED STANDARD PLAN RSP T1B

5-15-08

DIST	COUNTY	ROUTE	POST MILES TOTAL PROJECT	SHEET NO.	TOTAL SHEETS
03	ED	50	32.3/39.3	61	67

Randell D. Hiatt
REGISTERED CIVIL ENGINEER

June 6, 2008
PLANS APPROVAL DATE

REGISTERED PROFESSIONAL ENGINEER
Randell D. Hiatt
No. C50200
Exp. 6-30-09
CIVIL
STATE OF CALIFORNIA

The State of California or its officers or agents shall not be responsible for the accuracy or completeness of electronic copies of this plan sheet.

To accompany plans dated 5-10-10

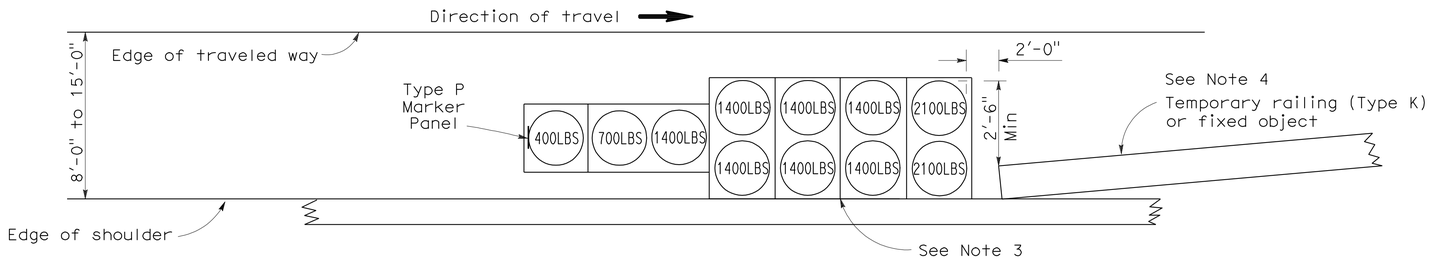

ARRAY 'TS11'

Approach speed less than 45 mph
See Note 9

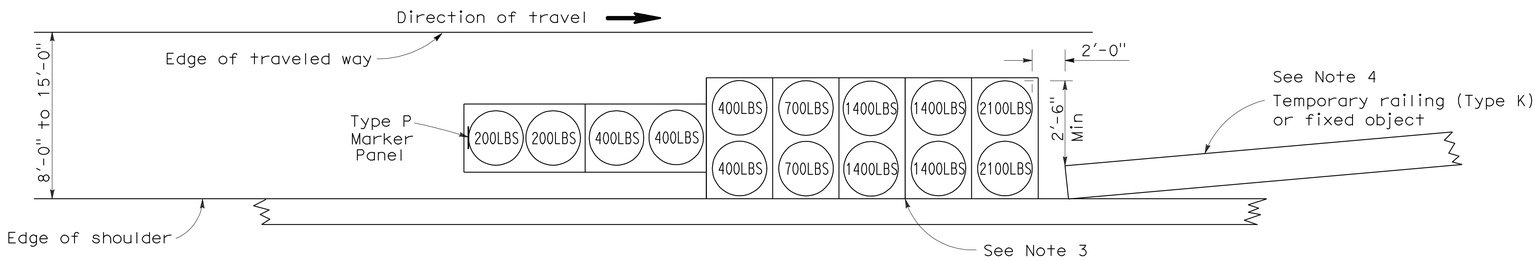

ARRAY 'TS14'

Approach speed 45 mph or more
See Note 9

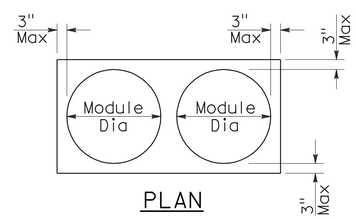

PLAN

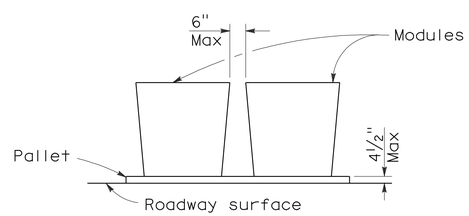

ELEVATION

CRASH CUSHION PALLET DETAIL

See Note 11

NOTES:

1. (XXX) Indicates sand filled module location and weight of sand in pounds for each module. Module spacing is based on the greater diameter of the module.
2. All sand weights are nominal.
3. The temporary crash cushion arrays shown on this plan shall be used only in locations where there will be traffic on one side of the temporary crash cushion array.
4. If the fixed object or approach end of the temporary railing is less than 15'-0" from the edge of traveled way, a temporary crash cushion is required in a construction or work zone.
5. Temporary crash cushion arrays shall not encroach on the traveled way.
6. Arrays for median shoulders shall conform to details shown on this plan for outside shoulders.
7. Place the Type P marker panel so that the bottom of the panel rests upon the pallet and faces traffic.
8. Refer to Standard Plan A73B for marker details.
9. For shoulder widths less than 8'-0", appropriate approved crash cushion protection, other than sand filled modules, shall be provided at fixed objects and at approach ends of temporary railing. The specific type of crash cushion shall be as shown on the project plans or as specified in the Special Provisions, or if not shown on the project plans or specified in the Special Provisions, shall be as approved by the Engineer.
10. Approach speeds indicated conform to NCHRP 350 Report criteria.
11. Use of pallets is optional.

STATE OF CALIFORNIA
DEPARTMENT OF TRANSPORTATION

TEMPORARY CRASH CUSHION, SAND FILLED (SHOULDER INSTALLATIONS)

NO SCALE

RSP T2 DATED JUNE 6, 2008 SUPERSEDES STANDARD PLAN T2
DATED MAY 1, 2006 - PAGE 213 OF THE STANDARD PLANS BOOK DATED MAY 2006.

REVISED STANDARD PLAN RSP T2

2006 REVISED STANDARD PLAN RSP T2

5-15-08

DIST	COUNTY	ROUTE	POST MILES TOTAL PROJECT	SHEET NO.	TOTAL SHEETS
03	ED	50	32.3/39.3	62	67

REGISTERED CIVIL ENGINEER

November 17, 2006
PLANS APPROVAL DATE

REGISTERED PROFESSIONAL ENGINEER — Greg W. Edwards — No. C36386 — Exp. 6-30-08 — CIVIL — STATE OF CALIFORNIA

The State of California or its officers or agents shall not be responsible for the accuracy or completeness of electronic copies of this plan sheet.

To accompany plans dated 5-10-10

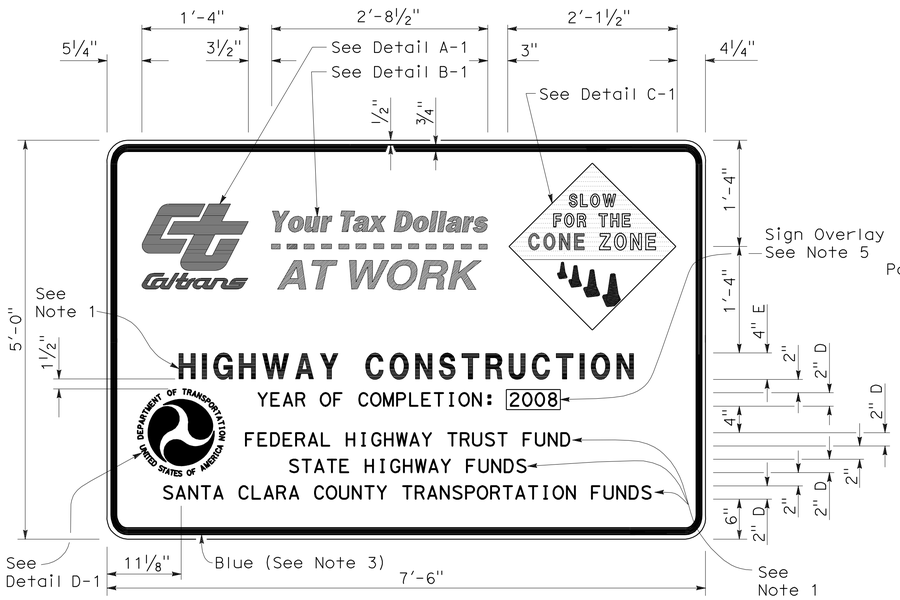

TYPE 1

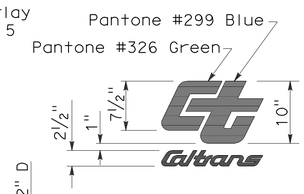

DETAIL A-1

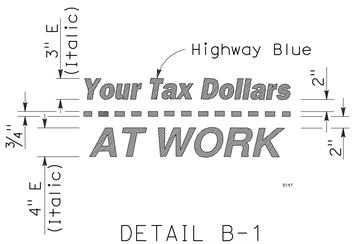

DETAIL B-1
(See Note 3)

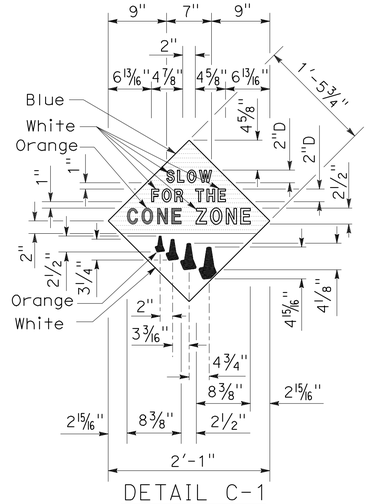

DETAIL C-1
(See Note 4)

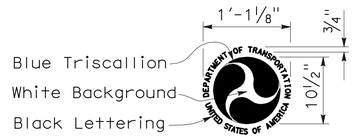

DETAIL D-1
(See Note 6)

NOTES:

1. The sign messages shown for type of project and fund types are examples only. See the Special Provisions for the applicable type of project and fund type messages to be used.
2. Except as otherwise shown, the legend of sign shall be black on a white background (non-reflective).
3. The border of the signs and details "B-1" and "B-2" shall be blue (non-reflective).
4. The diamond in details "C-1" and "C-2" shall be blue for the background of message, " SLOW FOR THE CONE ZONE", and white background for the orange cones. The color and type of font for the "SLOW FOR THE CONE ZONE" message shall be: "SLOW" white D; "FOR THE" white D; "CONE" orange Arial font; "ZONE" white Arial font.
5. Year of completion of project construction shown on the overlay is an example only. See the Special Provisions.
6. Use when the Project involves Federal Highway Trust Fund.

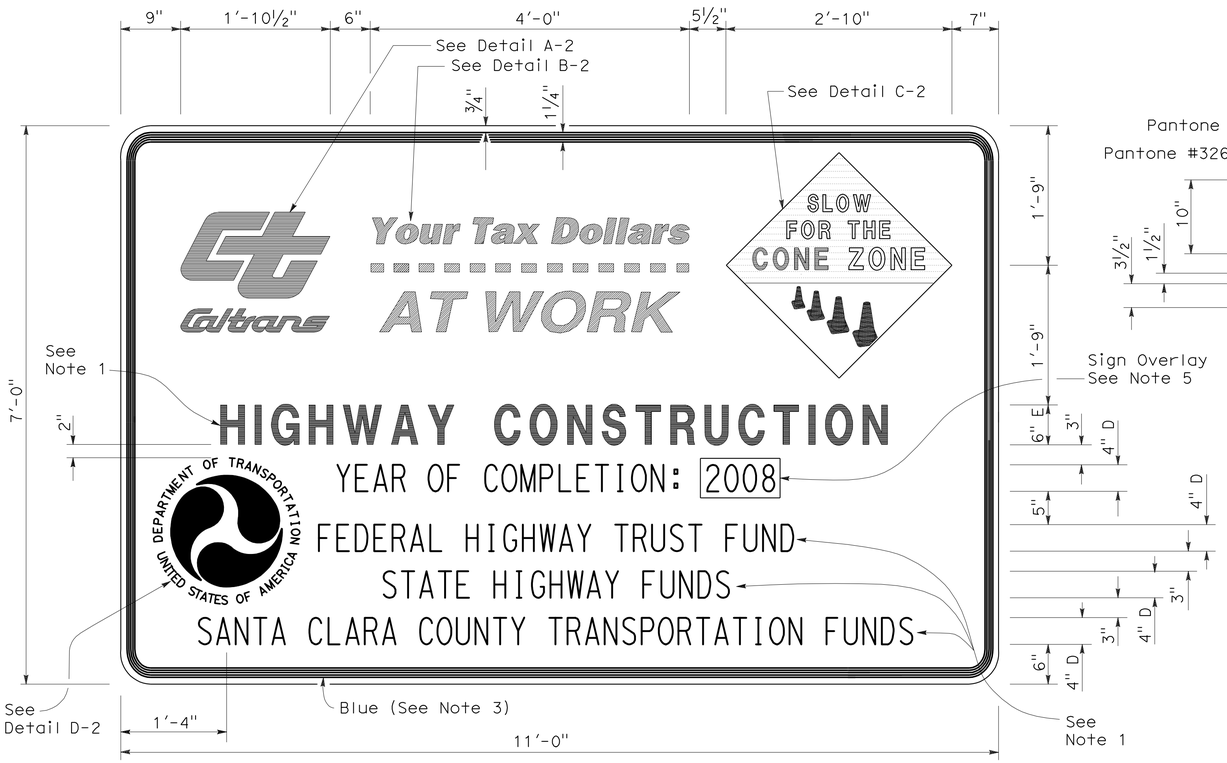

TYPE 2

DETAIL A-2

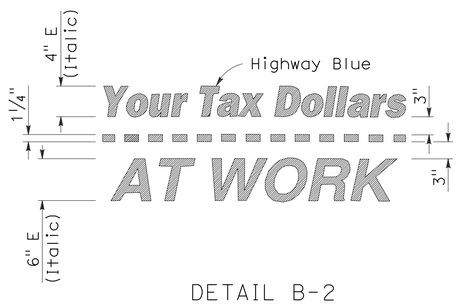

DETAIL B-2
(See Note 3)

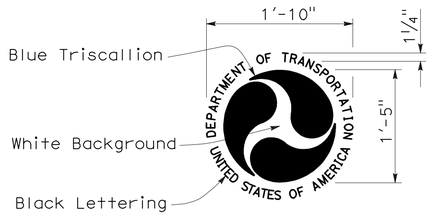

DETAIL D-2
(See Note 6)

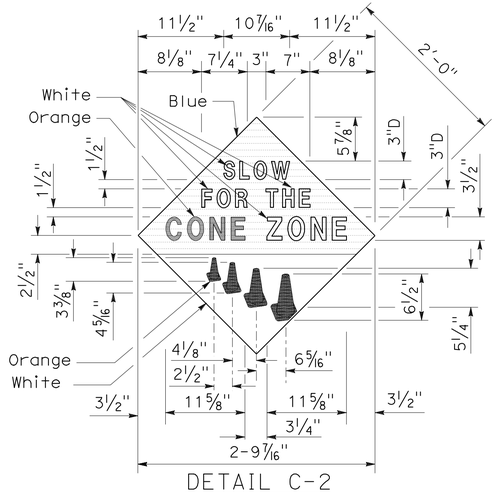

DETAIL C-2
(See Note 4)

STATE OF CALIFORNIA
DEPARTMENT OF TRANSPORTATION

CONSTRUCTION PROJECT FUNDING IDENTIFICATION SIGNS

NO SCALE

RSP T7 DATED NOVEMBER 17, 2006 SUPERSEDES STANDARD PLAN T7
DATED MAY 1, 2006 - PAGE 217 OF THE STANDARD PLANS BOOK DATED MAY 2006.

REVISED STANDARD PLAN RSP T7

2006 REVISED STANDARD PLAN RSP T7

9-7-06

DIST	COUNTY	ROUTE	POST MILES TOTAL PROJECT	SHEET NO.	TOTAL SHEETS
03	ED	50	32.3/39.3	63	67

LICENSED LANDSCAPE ARCHITECT

August 15, 2008
PLANS Approval DATE

The State of California or its officers or agents shall not be responsible for the accuracy or completeness of electronic copies of this plan sheet.

LICENSED LANDSCAPE ARCHITECT — Robert B. Schott — Signature — 11-04-08 Renewal Date — 08-11-08 Date — STATE OF CALIFORNIA

To accompany plans dated 5-10-10

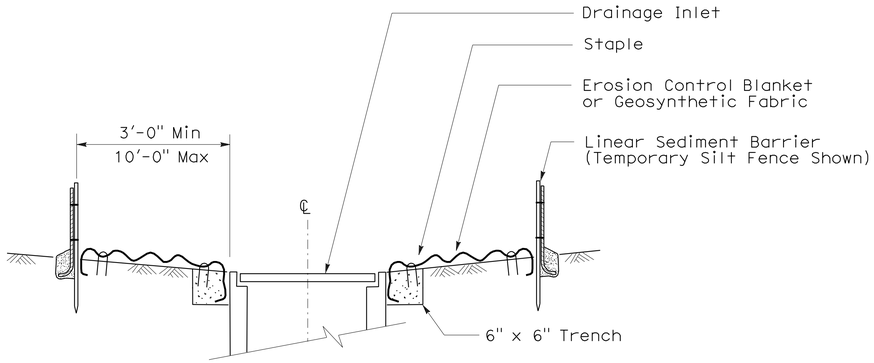

SECTION A-A

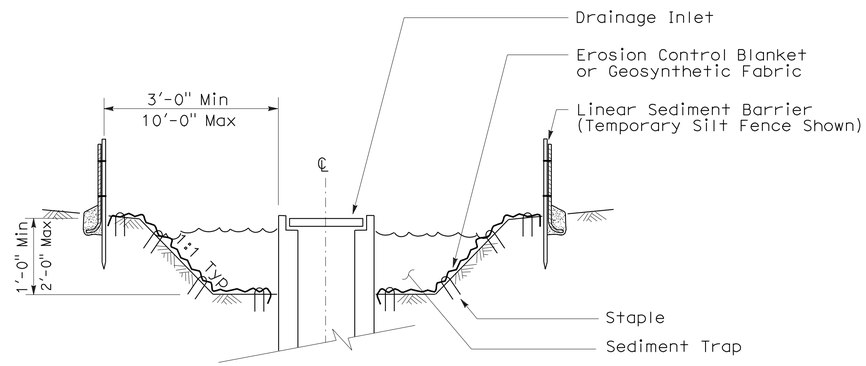

SECTION B-B

NOTES:

1. See Standard Plan T51 for Temporary Silt Fence.
2. Dimensions may vary to fit field conditions.

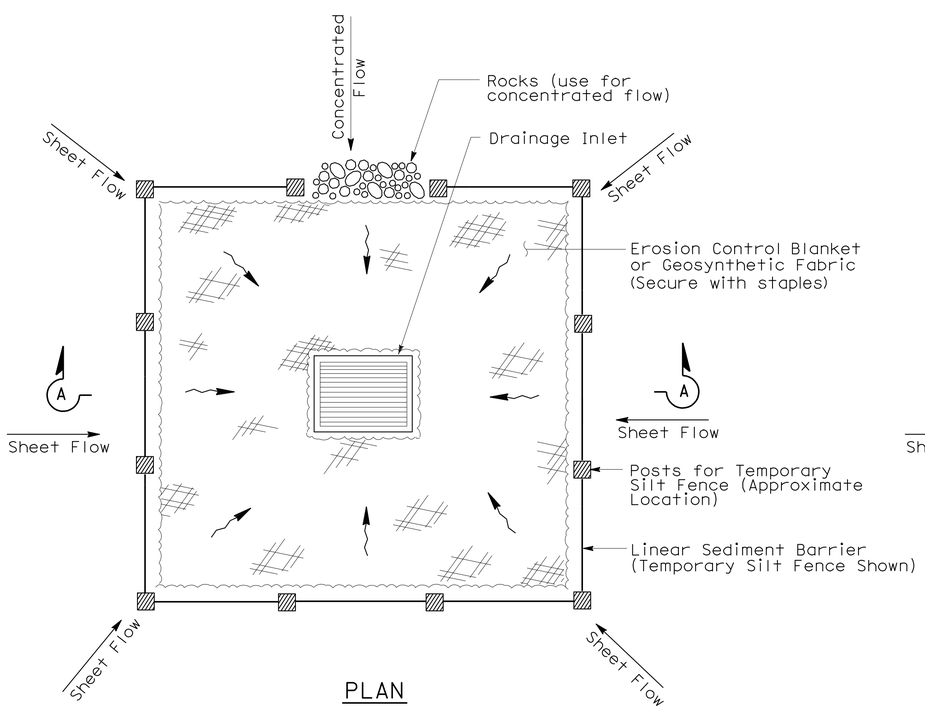

PLAN

TEMPORARY DRAINAGE INLET PROTECTION (TYPE 1)

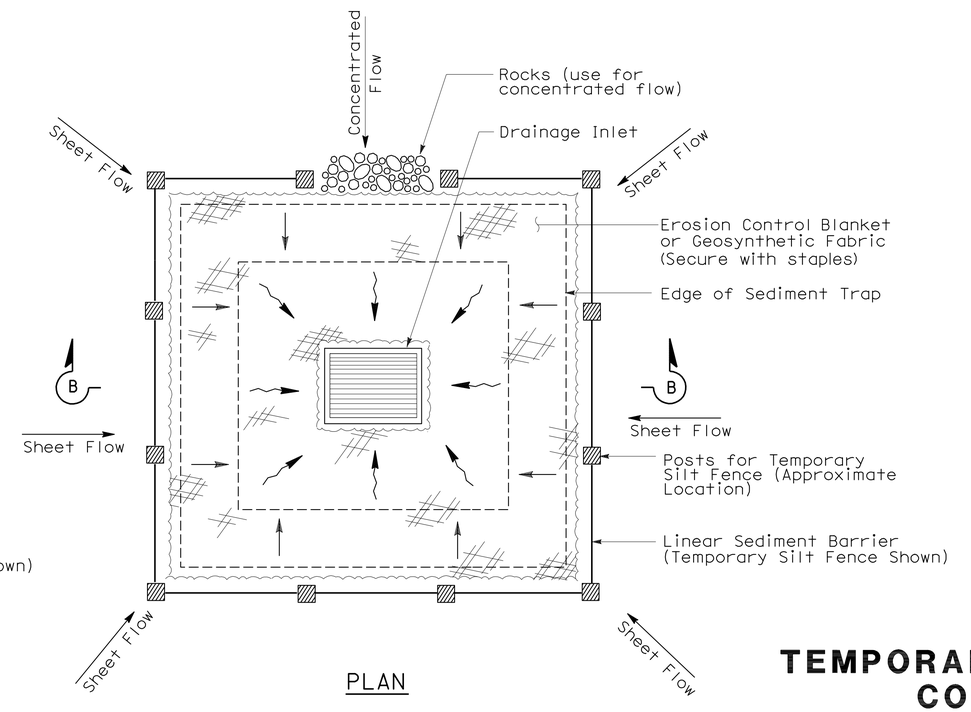

PLAN

TEMPORARY DRAINAGE INLET PROTECTION (TYPE 2) (EXCAVATED SEDIMENT TRAP)

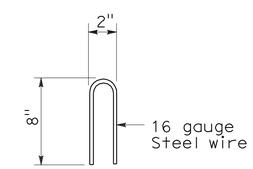

STAPLE DETAIL

STATE OF CALIFORNIA
DEPARTMENT OF TRANSPORTATION

TEMPORARY WATER POLLUTION CONTROL DETAILS (TEMPORARY DRAINAGE INLET PROTECTION)

NO SCALE

NSP T61 DATED AUGUST 15, 2008 SUPPLEMENTS THE STANDARD PLANS BOOK DATED MAY 2006.

NEW STANDARD PLAN NSP T61

2006 NEW STANDARD PLAN NSP T61

7-11-08

DIST	COUNTY	ROUTE	POST MILES TOTAL PROJECT	SHEET NO.	TOTAL SHEETS
03	ED	50	32.3/39.3	64	67

LICENSED LANDSCAPE ARCHITECT

August 15, 2008
PLANS APPROVAL DATE

The State of California or its officers or agents shall not be responsible for the accuracy or completeness of electronic copies of this plan sheet.

LICENSED LANDSCAPE ARCHITECT Robert B. Schott 3625 Signature 11-04-08 Renewal Date 08-11-08 Date STATE OF CALIFORNIA

To accompany plans dated 5-10-10

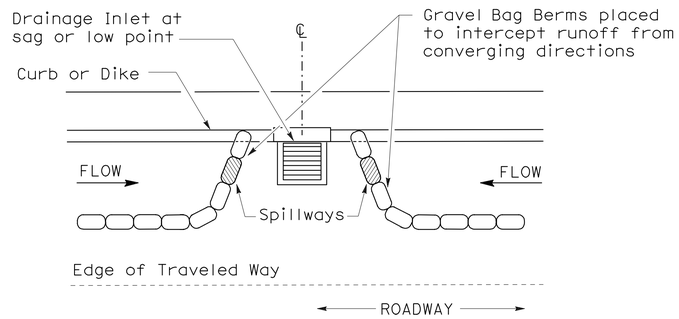

PLAN

CONFIGURATION FOR SAG POINT INLET (GRAVEL BAG BERM)

GRAVEL BAG BERM (TYPE 3A) SPACING TABLE

SLOPE OF ROADWAY (PERCENT)	1 to 3.9	4 to 5.9	6 to 7.9	8 to 10	10+
INTERVAL BETWEEN BERM	100′	75′	50′	25′	12′

For slope of less than 1%, install barriers only if erosion/sediment is prevalent

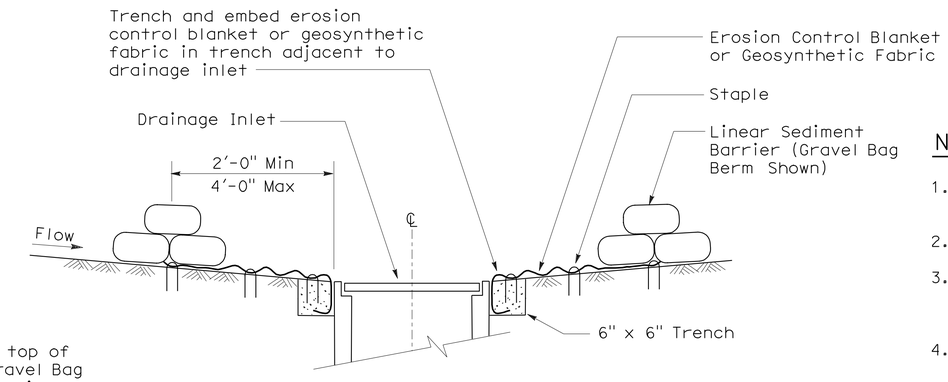

SECTION A-A

NOTES:

1. Place safety cones adjacent to drainage inlet protection.
2. Dimensions may vary to fit field conditions.
3. Install a minimum of 3 gravel bag berms upstream of each drainage inlet to be protected.
4. Position erosion control blanket or geosynthetic fabric at edge of concrete apron and secure in trench.
5. Erosion control blanket or geosynthetic fabric is not required if the area adjacent to the drainage inlet is vegetated or paved.

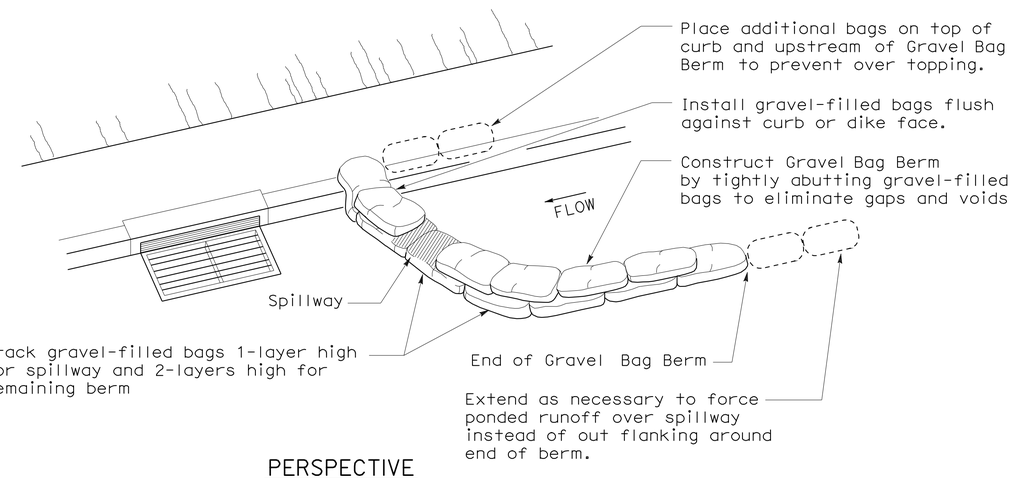

PERSPECTIVE

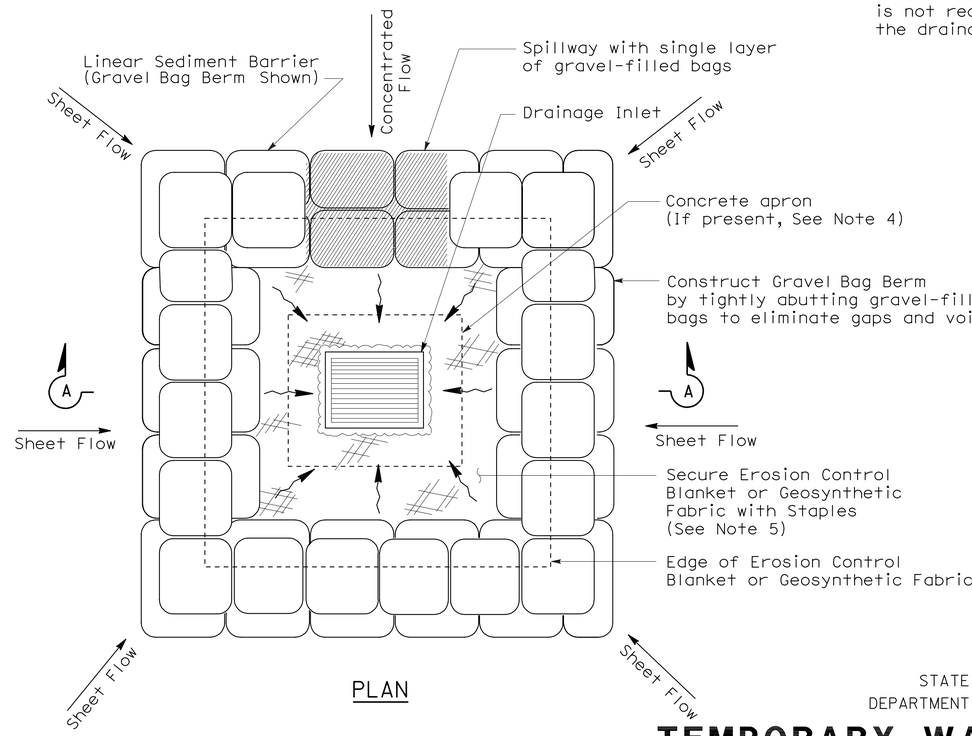

PLAN

TEMPORARY DRAINAGE INLET PROTECTION (TYPE 3B)

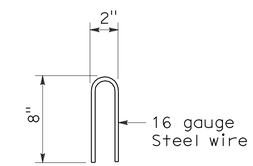

STAPLE DETAIL

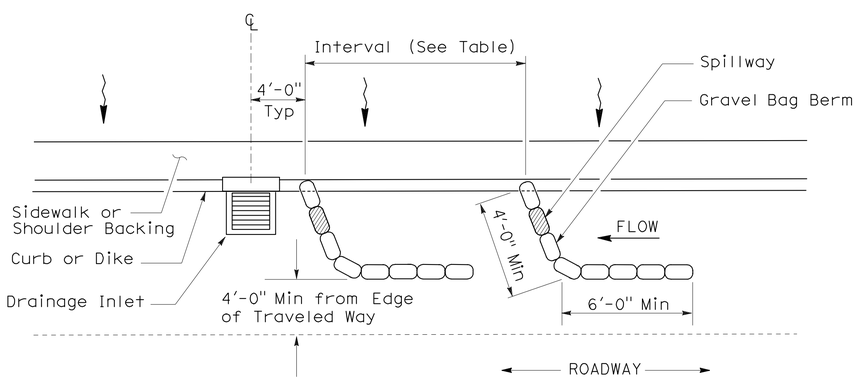

PLAN

TEMPORARY DRAINAGE INLET PROTECTION (TYPE 3A) (GRAVEL BAG BERM)

STATE OF CALIFORNIA
DEPARTMENT OF TRANSPORTATION

TEMPORARY WATER POLLUTION CONTROL DETAILS (TEMPORARY DRAINAGE INLET PROTECTION)

NO SCALE

NSP T62 DATED AUGUST 15, 2008 SUPPLEMENTS THE STANDARD PLANS BOOK DATED MAY 2006.

NEW STANDARD PLAN NSP T62

2006 NEW STANDARD PLAN NSP T62

7-11-08

DIST	COUNTY	ROUTE	POST MILES TOTAL PROJECT	SHEET NO.	TOTAL SHEETS
03	ED	50	32.3/39.3	65	67

LICENSED LANDSCAPE ARCHITECT

August 15, 2008
PLANS APPROVAL DATE

The State of California or its officers or agents shall not be responsible for the accuracy or completeness of electronic copies of this plan sheet.

LICENSED LANDSCAPE ARCHITECT — Robert B. Schott — Signature — 11-04-08 Renewal Date — 08-11-08 Date — STATE OF CALIFORNIA

To accompany plans dated 5-10-10

FLEXIBLE SEDIMENT BARRIER SPACING TABLE

SLOPE OF ROADWAY (PERCENT)	0 to 0.9	1 to 1.9	2 to 2.9	3 to 4	5+
INTERVAL BETWEEN BARRIERS	50′	35′	30′	25′	20′
ANGLE FROM FACE OF CURB	70°	70°	70°	45°	45°
SUGGESTED BARRIER LENGTH	6′	6′	6′	6′	6′

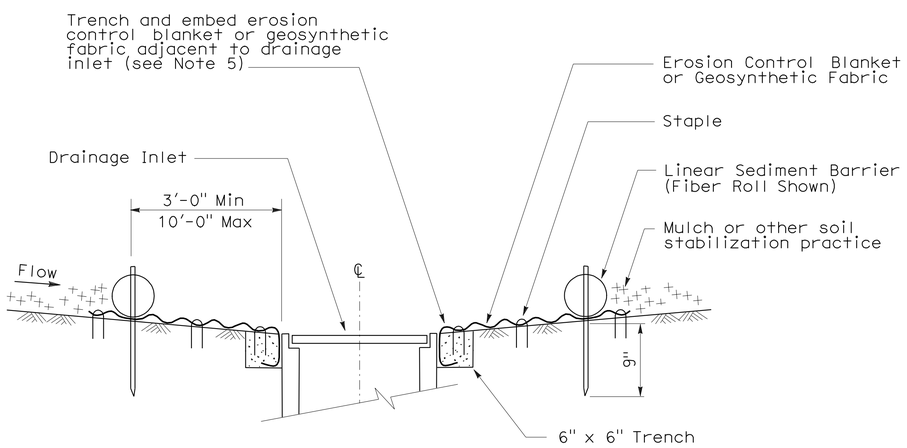

SECTION A-A

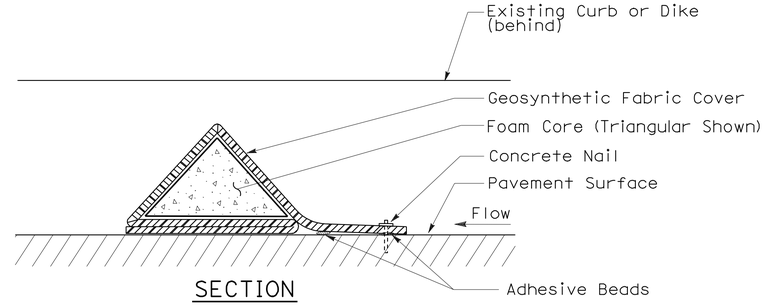

SECTION

FLEXIBLE SEDIMENT BARRIER DETAIL (FOAM BARRIER SHOWN)

NOTES:

1. See Standard Plan T51 for Temporary Silt Fence.
2. Dimensions may vary to fit field conditions.
3. Install a minimum of 3 flexible sediment barriers upstream of each drainage inlet to be protected.
4. Position erosion control blanket or geosynthetic fabric at edge of concrete apron and secure in trench.
5. Erosion control blanket or geosynthetic fabric is not required if the area adjacent to the drainage inlet is vegetated.

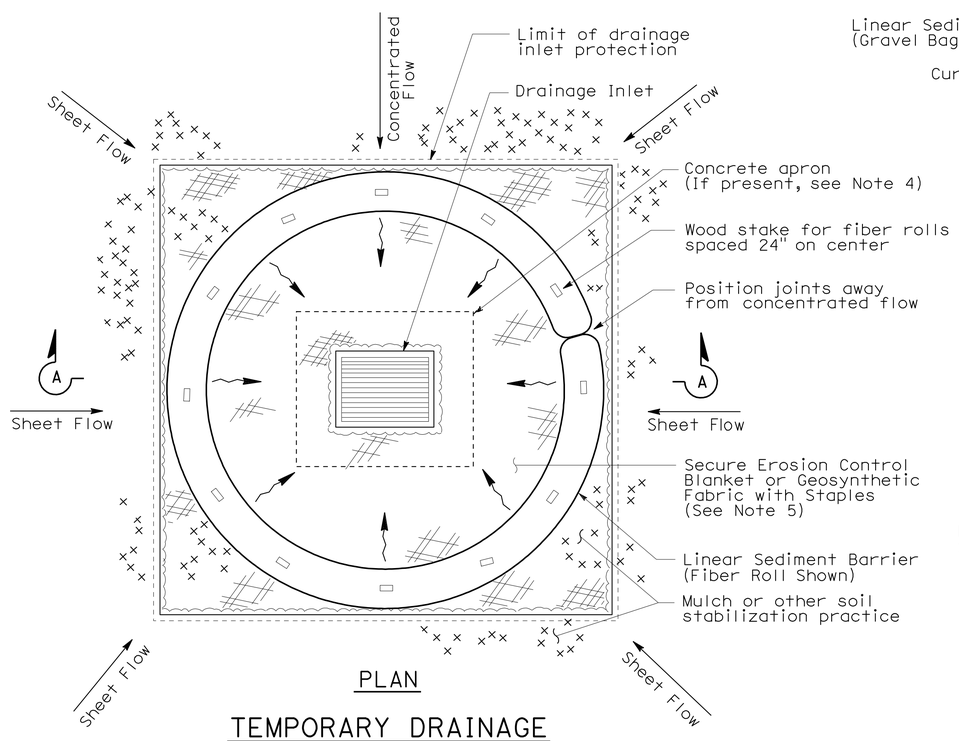

PLAN

TEMPORARY DRAINAGE INLET PROTECTION (TYPE 4A)

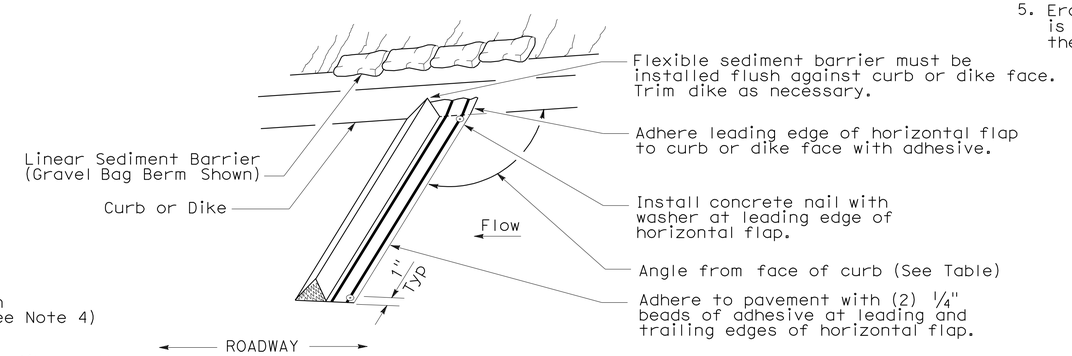

PERSPECTIVE

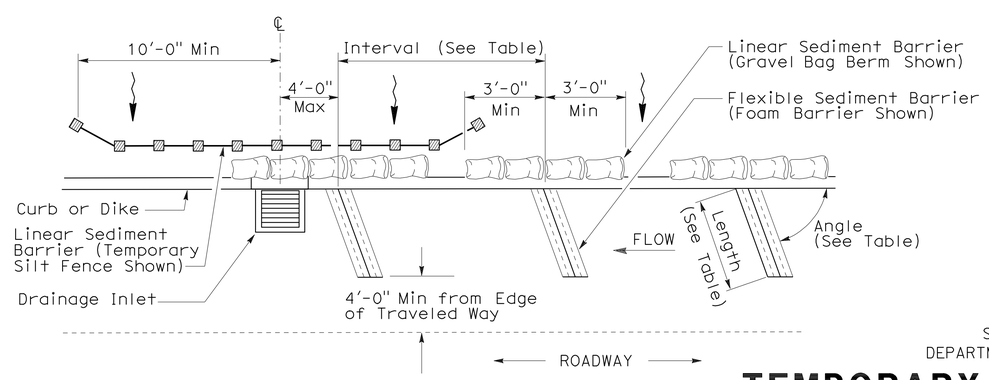

PLAN

TEMPORARY DRAINAGE INLET PROTECTION (TYPE 4B) FLEXIBLE SEDIMENT BARRIER

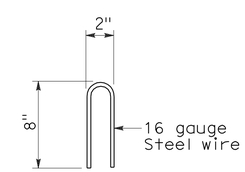

STAPLE DETAIL

STATE OF CALIFORNIA
DEPARTMENT OF TRANSPORTATION

TEMPORARY WATER POLLUTION CONTROL DETAILS (TEMPORARY DRAINAGE INLET PROTECTION)

NO SCALE

NSP T63 DATED AUGUST 15, 2008 SUPPLEMENTS THE STANDARD PLANS BOOK DATED MAY 2006.

NEW STANDARD PLAN NSP T63

2006 NEW STANDARD PLAN NSP T63

7-11-08

DIST	COUNTY	ROUTE	POST MILES TOTAL PROJECT	SHEET NO.	TOTAL SHEETS
03	ED	50	32.3/39.3	66	67

LICENSED LANDSCAPE ARCHITECT

August 15, 2008
PLANS APPROVAL DATE

The State of California or its officers or agents shall not be responsible for the accuracy or completeness of electronic copies of this plan sheet.

LICENSED LANDSCAPE ARCHITECT — Robert B. Schott — Signature — 11-04-08 Renewal Date — 08-11-08 Date — STATE OF CALIFORNIA

To accompany plans dated 5-10-10

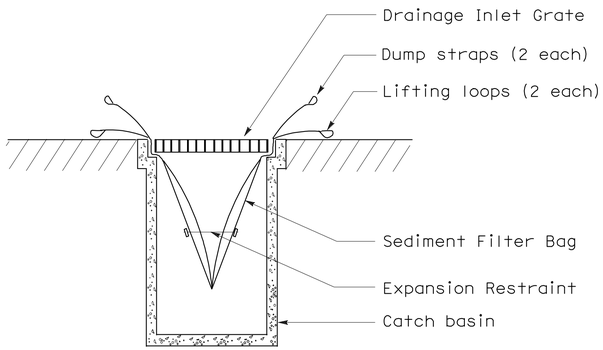

SECTION B-B

SEDIMENT FILTER BAG DETAIL

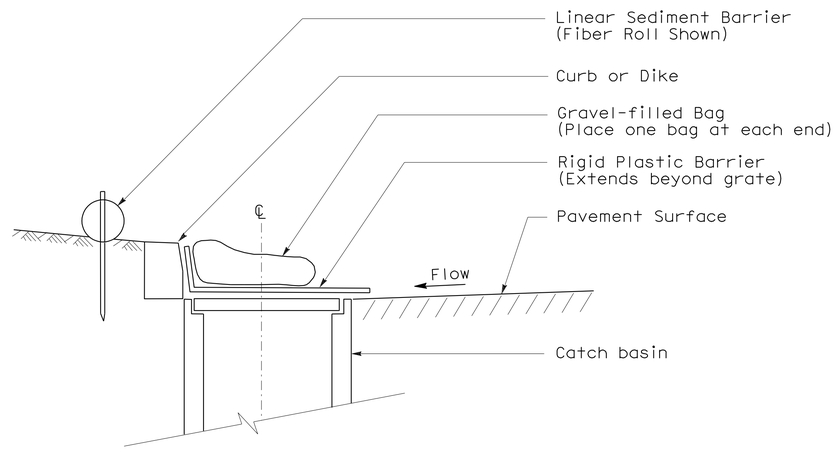

SECTION

TEMPORARY DRAINAGE INLET PROTECTION (TYPE 6A) (CATCH BASIN WITH GRATE)

NOTES:

1. See Standard Plan T51 for Temporary Silt Fence.
2. Dimensions may vary to fit field conditions.

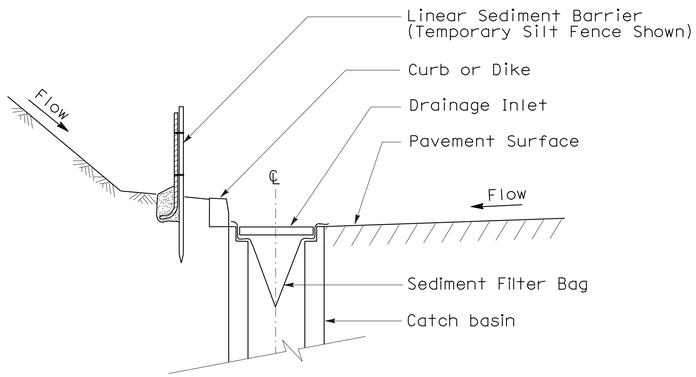

SECTION A-A

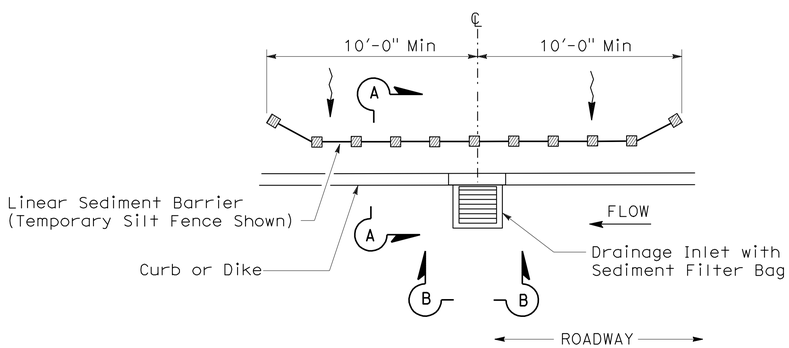

PLAN

TEMPORARY DRAINAGE INLET PROTECTION (TYPE 5) (SEDIMENT FILTER BAG)

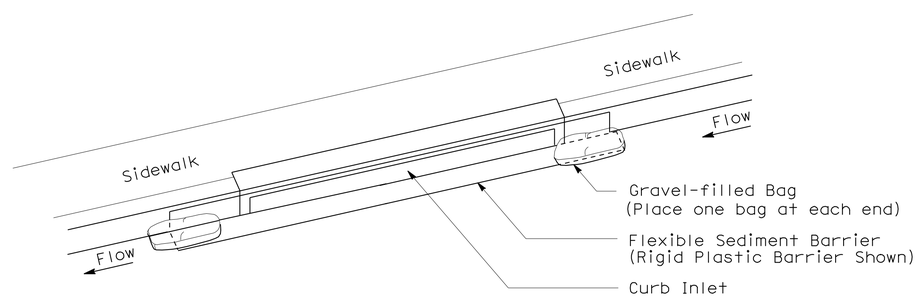

PERSPECTIVE

TEMPORARY DRAINAGE INLET PROTECTION (TYPE 6B) (CURB INLET WITHOUT GRATE)

STATE OF CALIFORNIA
DEPARTMENT OF TRANSPORTATION

TEMPORARY WATER POLLUTION CONTROL DETAILS (TEMPORARY DRAINAGE INLET PROTECTION)

NO SCALE

NSP T64 DATED AUGUST 15, 2008 SUPPLEMENTS THE STANDARD PLANS BOOK DATED MAY 2006.

NEW STANDARD PLAN NSP T64

2006 NEW STANDARD PLAN NSP T64

7-11-08

DIST	COUNTY	ROUTE	POST MILES TOTAL PROJECT	SHEET NO.	TOTAL SHEETS
03	ED	50	32.3/39.3	67	67

LICENSED LANDSCAPE ARCHITECT

April 3, 2009
PLANS APPROVAL DATE

The State of California or its officers or agents shall not be responsible for the accuracy or completeness of electronic copies of this plan sheet.

LICENSED LANDSCAPE ARCHITECT — Robert B. Schott 3025 — Signature — 11-30-10 Renewal Date — 2-25-09 Date — STATE OF CALIFORNIA

To accompany plans dated 5-10-10

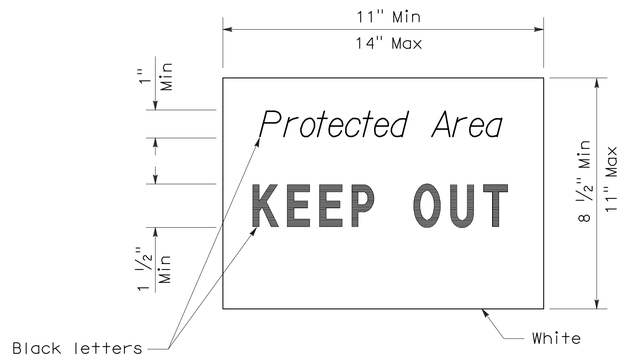

SIGN DETAIL

NOTE:

1. Temporary silt fence and temporary straw bale barrier shown for reference purposes only.

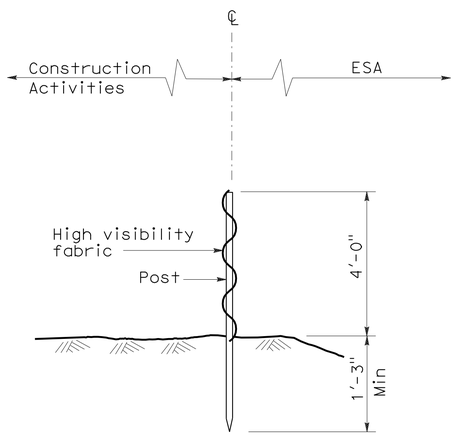

SECTION
TEMPORARY FENCE (TYPE ESA)

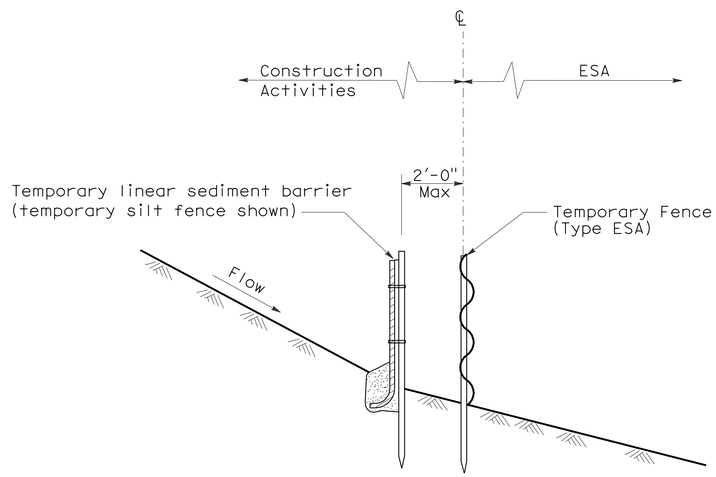

SECTION
PLACEMENT DETAIL
FOR TEMPORARY LINEAR SEDIMENT BARRIER
USED WITH TEMPORARY
FENCE (TYPE ESA)
(See Note 1)

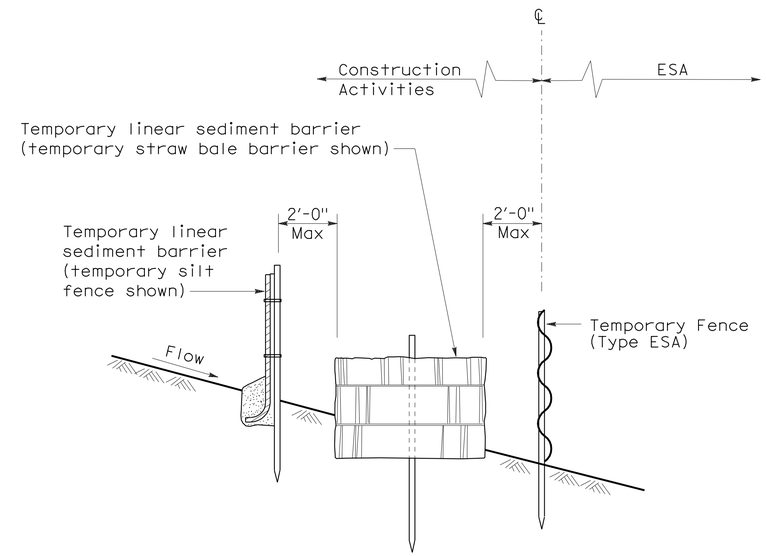

SECTION
PLACEMENT DETAIL
FOR TEMPORARY SILT FENCE
AND TEMPORARY STRAW BALE BARRIER
USED WITH TEMPORARY FENCE (TYPE ESA)
(See Note 1)

STATE OF CALIFORNIA
DEPARTMENT OF TRANSPORTATION

TEMPORARY WATER POLLUTION CONTROL DETAILS [TEMPORARY FENCE (TYPE ESA)]

NO SCALE

NSP T65 DATED APRIL 3, 2009 SUPPLEMENTS
THE STANDARD PLANS BOOK DATED MAY 2006.

NEW STANDARD PLAN NSP T65

2006 NEW STANDARD PLAN NSP T65