Dist	COUNTY	ROUTE	POST MILES TOTAL PROJECT	SHEET No.	TOTAL SHEETS
03	Pla	80	0.3/29.3	14	56

REGISTERED CIVIL ENGINEER 2-10-11 DATE

9-13-10
PLANS APPROVAL DATE

REGISTERED PROFESSIONAL ENGINEER JUSTIN A. UNCK No. C65889 Exp. 12-31-11 CIVIL STATE OF CALIFORNIA

THE STATE OF CALIFORNIA OR ITS OFFICERS OR AGENTS SHALL NOT BE RESPONSIBLE FOR THE ACCURACY OR COMPLETENESS OF SCANNED COPIES OF THIS PLAN SHEET.

2

NOTES:

1. FOR CONSTRUCTION ON WESTBOUND 80, FOLLOW THE SAME CONSTRUCTION STAGING DEPICTED FOR EASTBOUND.
2. SEE CONSTRUCTION DETAILS AND STRUCTURE PLANS FOR PLANNED WORK.
3. USE TRAFFIC HANDLING PLANS OR STANDARD PLAN TRAFFIC CONTROL SYSTEM T10 OR T10A AS APPROPRIATE, SUBJECT TO RESTRICTIONS AS GIVEN IN SPECIAL PROVISIONS.

STAGE CONSTRUCTION NOTE:

STAGE 1A AND 1B - IN ONE 60 HOUR CLOSURE WINDOW, RECONSTRUCT ROADWAY STRUCTURAL SECTION AT EASTBOUND APPROACH AND DEPARTURE SLABS. STRUCTURAL SECTION WILL BE OVERBUILT TO MATCH EXISTING PAVEMENT TO ALLOW FOR REOPENING TO TRAFFIC AT END OF CLOSURE. SEE DETAILS THIS PAGE.

LEGEND:

CONSTRUCT THIS STAGE

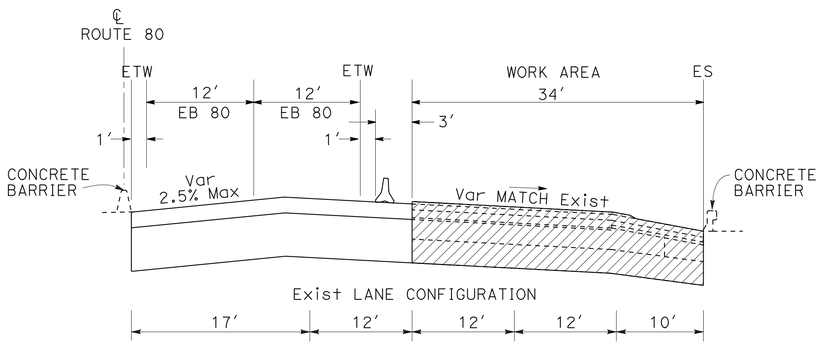

STAGE 1A

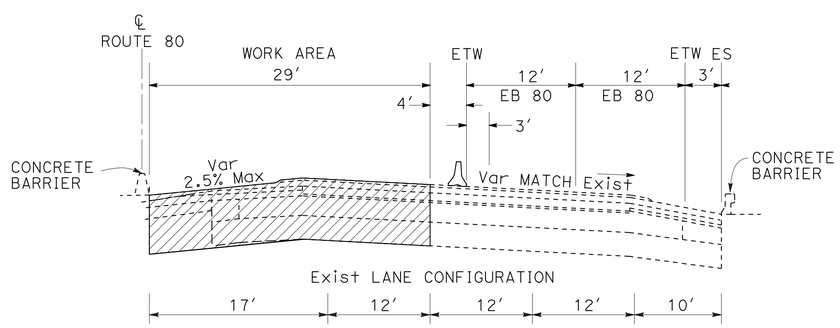

STAGE 1B

LEGEND:

HMA (TYPE A) TO BE REMOVED IN STAGE 2

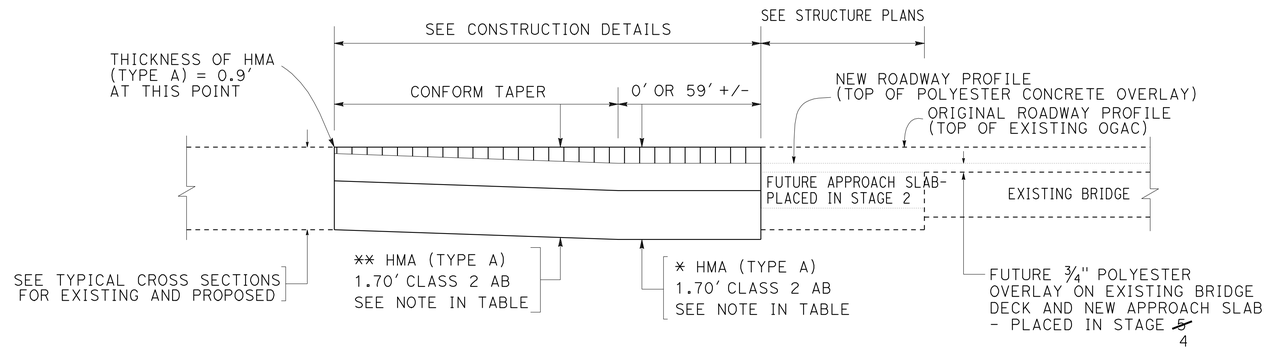

3

CONFORM AT STRUCTURES - STAGE 1A AND 1B

THICKNESS OF HMA (TYPE A) PLACED IN STAGE 1

DIRECTION	BRIDGE	*	**
EASTBOUND	BOWMAN UC	N/A	0.90-0.95′
	BOWMAN OH (SOUTH)	1.00′	0.90-1.00′
	BOWMAN OH (NORTH)	1.00′	0.90-1.00′
WESTBOUND	BOWMAN UC	N/A	0.90-1.00′
	BOWMAN OH (SOUTH)	1.10′	0.90-1.10′
	BOWMAN OH (NORTH)	1.10′	0.90-1.10′

DEPTH OF EXCAVATION AND THICKNESS OF HMA (TYPE A) PLACED IN STAGE 1 SHALL BE ADJUSTED AS REQUIRED TO PROVIDE 0.8′ HMA (TYPE A) AFTER COLD PLANING OPERATIONS IN STAGE 2, OR AS DIRECTED BY THE ENGINEER.

3 **REVISED PER ADDENDUM No. 3 DATED MARCH 8, 2011**

BOWMAN UC BRIDGE No. 19-0042
BOWMAN OH (SOUTH) BRIDGE No. 19-0023
BOWMAN OH (NORTH) BRIDGE No. 19-0024

2 **REVISED PER ADDENDUM No. 2 DATED FEBRUARY 25, 2011**

THIS PLAN ACCURATE FOR STAGE CONSTRUCTION WORK ONLY

STAGE CONSTRUCTION

NO SCALE

SC-1

STATE OF CALIFORNIA - DEPARTMENT OF TRANSPORTATION
Caltrans® NORTH REGION OFFICE OF DESIGN SOUTH DESIGN BRANCH S1

FUNCTIONAL SUPERVISOR: M. SADIQ
CALCULATED-DESIGNED BY: J. UNCK
CHECKED BY: J. UNCK
REVISED BY / DATE REVISED

LAST REVISION 00-00-00 | DATE PLOTTED => 07-MAR-2011 | TIME PLOTTED => 09:08

Dist	COUNTY	ROUTE	POST MILES TOTAL PROJECT	SHEET No.	TOTAL SHEETS
03	Pla	80	0.3/29.3	18B	56

REGISTERED CIVIL ENGINEER 2-10-11 DATE

9-13-10
PLANS APPROVAL DATE

REGISTERED PROFESSIONAL ENGINEER JUSTIN A. UNCK No. C65889 Exp. 12-31-11 CIVIL STATE OF CALIFORNIA

THE STATE OF CALIFORNIA OR ITS OFFICERS OR AGENTS SHALL NOT BE RESPONSIBLE FOR THE ACCURACY OR COMPLETENESS OF SCANNED COPIES OF THIS PLAN SHEET.

LEGEND:

REMOVE ASPHALT CONCRETE SURFACING - SEE STRUCTURE PLANS
COLD PLANE AC Pvmnt

CONSTRUCT THIS STAGE

STAGE CONSTRUCTION NOTES:

STAGE 2A AND 2B - IN ONE 60 HOUR CLOSURE WINDOW, PLACE NEW EASTBOUND APPROACH AND DEPARTURE SLABS, REMOVE AC SURFACING FROM BRIDGE DECK, AND COLD PLANE OVERBUILT STRUCTURAL SECTION AT CONFORM TAPER. SEE DETAIL A AND CONFORM AT STRUCTURES - STAGE 2A AND 2B DETAIL THIS PAGE, AND STRUCTURE PLANS. 2

STAGE 3 - REPLACE MEDIAN BARRIER REMOVED IN STAGE 2B. REPLACE EASTBOUND CONCRETE BRIDGE BARRIER ON OUTSIDE SHOULDER.

STAGE 4 ~~STAGE 5~~ - PLACE POLYESTER CONCRETE OVERLAY ON EASTBOUND LANES. POLYESTER CONCRETE OVERLAY MUST BE PLACED WITHIN 14 DAYS AFTER REMOVING AC SURFACING FROM BRIDGE DECK. 3

STAGE 5 ~~STAGE 4~~ - COLD PLANE HMA PAVEMENT AND PLACE RHMA (OPEN GRADED) ON EASTBOUND LANES, ONCE STAGES 1-4 HAVE BEEN COMPLETED AT ALL THREE BRIDGES.

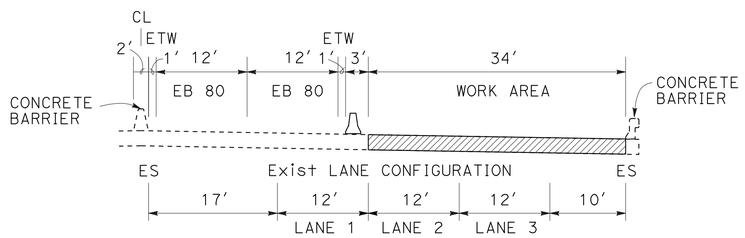

STAGE 2A

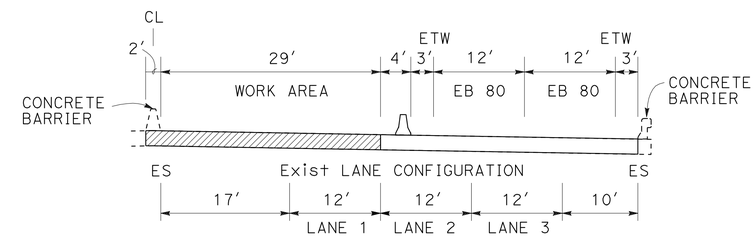

STAGE 2B

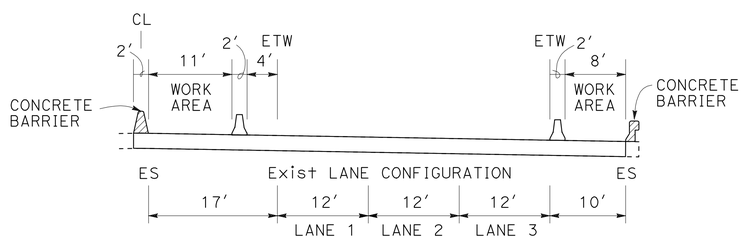

STAGE 3

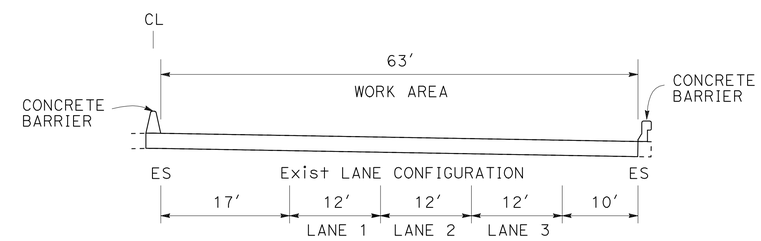

STAGE 4
STAGE 5

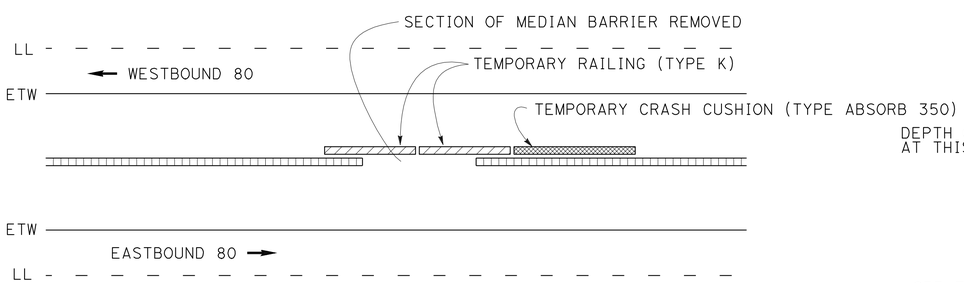

DETAIL A

PROTECT TRAFFIC FROM OPENING IN BARRIER. TEMPORARY RAILING (TYPE K) SHALL REMAIN IN PLACE UNTIL NEW CONCRETE BARRIER IS CURED OR AS DIRECTED BY THE ENGINEER. STAGE 3 TEMPORARY RAILING (TYPE K) WILL PROTECT EASTBOUND TRAFFIC.

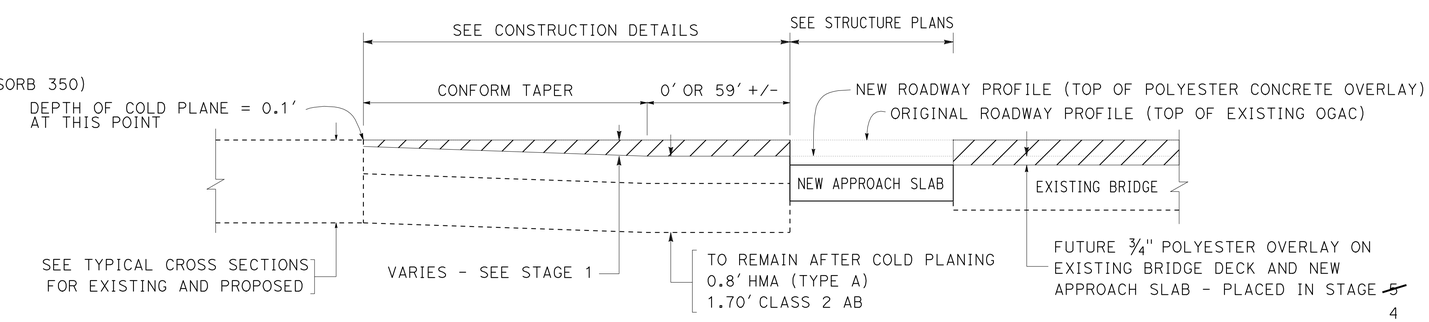

CONFORM AT STRUCTURES - STAGE 2A AND 2B 3

3 REVISED PER ADDENDUM No. 3 DATED MARCH 8, 2011

BOWMAN UC BRIDGE No. 19-0042
BOWMAN OH (SOUTH) BRIDGE No. 19-0023
BOWMAN OH (NORTH) BRIDGE No. 19-0024

2 ADDED PER ADDENDUM No. 2 DATED FEBRUARY 25, 2011

THIS PLAN ACCURATE FOR STAGE CONSTRUCTION WORK ONLY

STAGE CONSTRUCTION

NO SCALE

SC-7

STATE OF CALIFORNIA - DEPARTMENT OF TRANSPORTATION
Caltrans® NORTH REGION OFFICE OF DESIGN SOUTH DESIGN BRANCH S1

FUNCTIONAL SUPERVISOR: M. SADIQ
CALCULATED-DESIGNED BY: J. UNCK
CHECKED BY: J. UNCK
REVISED BY
DATE REVISED

LAST REVISION 00-00-00
DATE PLOTTED => 07-MAR-2011
TIME PLOTTED => 10:15