FOR CONTRACT NO.: 03-3E100**4**

INFORMATION HANDOUT

WATER QUALITY

CALIFORNIA REGIONAL WATER QUALITY CONTROL BOARDCERTIFICATION
(CENTRAL VALLEY REGION)

PERMITS

UNITED STATES ARMY CORPS OF ENGINEERS
NON-REPORTING NATIONWIDE 404 PERMIT

MATERIALS INFORMATION

FOUNDATION REPORT FOR MAGRA OVERCROSSING, Br. No. 19-0092
FOUNDATION REPORT FOR BRACE ROAD OVERCROSSING, Br. No. 19-0096
FOUNDATION REPORT FOR HORSESHOE BAR OVERCROSSING, Br. No. 19-0097
FOUNDATION REPORT FOR KING ROAD OVERCROSSING, Br. No. 19-0098
FOUNDATION REPORT FOR PENRYN ROAD OVERCROSSING, Br. No. 19-0099
FOUNDATION REPORT FOR GILARDI ROAD OVERCROSSING, Br. No. 19-0101

GEOTECHNICAL DESIGN REPORT

ASBESTOS AND LEAD-CONTAINING PAINT SURVEY REPORTS
MAGRA ROAD OC (BR. NO. 19-0092)
BRACE ROAD OC (BR. NO. 19-0096)
HORSESHOE BAR ROAD OC (BR. NO. 19-0097)
KING ROAD OC (BR. NO. 19-0098)
PENRYN ROAD OC (BR. NO. 19-0099)
GILARDI ROAD OC (BR. NO. 19-0101)
NEWCASTLE ROAD OC (BR. NO. 19-0102)
WEIMAR CROSS ROAD OC (BR. NO. 19-0083)

PLACER COUNTY WATER AGENCY (PCWA) IMPROVEMENT STANDARDS,
STANDARD SPECIFICATIONS, AND STANDARD DRAWINGS

PCWA SYSTEM OUTAGE REQUEST FORM

PCWA PIPE TEST RECORD FORM

RAILROAD RELATIONS AND INSURANCE REQUIREMENTS

LOG OF TEST BORINGS

ROUTE: 03-PLA-80-8.1/37.8

CALIFORNIA
Water Boards

EDMUND G. BROWN JR.
GOVERNOR

MATTHEW RODRIQUEZ
SECRETARY FOR
ENVIRONMENTAL PROTECTION

Central Valley Regional Water Quality Control Board

17 May 2013

Samuel Jordan
California Department of Transportation
703 B Street
Marysville, CA 95901

CERTIFIED MAIL
7012 0470 0000 9904 4762

CLEAN WATER ACT §401 TECHNICALLY CONDITIONED WATER QUALITY CERTIFICATION; CALIFORNIA DEPARTMENT OF TRANSPORTATION, VERTICAL CLEARANCE IMPROVEMENT PROJECT (WDID#5A31CR00341), PLACER COUNTY

This Order responds to the 15 October 2012 application submitted by the California Department of Transportation (Applicant) for the Water Quality Certification of a highway improvement project temporarily impacting less than 0.01 acre/90 linear feet of waters of the United States.

This Order serves as certification of the United States Army Corps of Engineers' Nationwide Permit# 18 (Non-Reporting) under § 401 of the Clean Water Act, and a Waste Discharge Requirement under the Porter-Cologne Water Quality Control Act.

WATER QUALITY CERTIFICATION STANDARD CONDITIONS:

1. This Order serves as a Water Quality Certification (Certification) action that is subject to modification or revocation upon administrative or judicial review, including review and amendment pursuant to § 13330 of the California Water Code and § 3867 of the California Code of Regulations.

2. This Certification action is not intended and shall not be construed to apply to any discharge from any activity involving a hydroelectric facility requiring a Federal Energy Regulatory Commission (FERC) license or an amendment to a FERC license unless the pertinent Certification application was filed pursuant to § 3855(b) of the California Code of Regulations, and the application specifically identified that a FERC license or amendment to a FERC license for a hydroelectric facility was being sought.

3. The validity of any non-denial Certification action shall be conditioned upon total payment of the full fee required under § 3860(c) of the California Code of Regulations.

4. This Certification is no longer valid if the project (as described) is modified, or coverage under § 404 of the Clean Water Act has expired.

5. All reports, notices, or other documents required by this Certification or requested by the Central Valley Regional Water Quality Control Board (Central Valley Water Board) shall be signed by a person described below or by a duly authorized representative of that person.

   (a) For a corporation: by a responsible corporate officer such as (1) a president, secretary, treasurer, or vice president of the corporation in charge of a principal business function; (2) any other person who performs similar policy or decision-making functions for the corporation; or (3) the manager of one or more manufacturing, production, or operating facilities if authority to sign documents has been assigned or delegated to the manager in accordance with corporate procedures.
   (b) For a partnership or sole proprietorship: by a general partner or the proprietor.
   (c) For a municipality, state, federal, or other public agency: by either a principal executive officer or ranking elected official.

6. Any person signing a document under Standard Condition number 5 shall make the following certification:

   "I certify under penalty of law that this document and all attachments were prepared under my direction or supervision in accordance with a system designed to assure that qualified personnel properly gathered and evaluated the information submitted. Based on my inquiry of the person or persons who manage the system, or those persons directly responsible for gathering the information, the information submitted is, to the best of my knowledge and belief, true, accurate, and complete. I am aware there are significant penalties for submitting false information, including the possibility of fine and imprisonment for knowing violations."

TECHNICAL CERTIFICATION CONDITIONS:

In addition to the above standard conditions, the Applicant shall satisfy the following:

1. The Applicant shall notify the Central Valley Water Board in writing seven (7) days in advance of the start of any work within waters of the United States. The notification shall include the name of the project and the WDID number, and shall be sent to the Central Valley Water Board Contact indicated in this Certification.

2. Except for activities permitted by the United States Army Corps of Engineers under § 404 of the Clean Water Act, soil, silt, or other organic materials shall not be placed where such materials could pass into surface water or surface water drainage courses.

3. The Applicant shall maintain a copy of this Certification and supporting documentation (Project Information Sheet) at the Project site during construction for review by site personnel and agencies. All personnel (employees, contractors, and subcontractors) performing work on the proposed project shall be adequately informed and trained regarding the conditions of this Certification.

4. The Applicant shall perform surface water sampling:
   a) when performing any in-water work;
   b) in the event that project activities result in any materials reaching surface waters; or
   c) when any activities result in the creation of a visible plume in surface waters. The monitoring requirements in Table 1 shall be conducted upstream out of the influence of the project, and 300 feet downstream of the work area. The sampling frequency may be modified for certain projects with written approval from Central Valley Water Board staff.

Table 1:

Parameter	Unit	Type of Sample	Minimum Sampling Frequency	Required Analytical Test Method
Turbidity	NTU	Grab[1]	Every 4 hours during in-water work	(2)
Settleable Material	mL/L	Grab[1]	Every 4 hours during in-water work	(2)
Visible construction related pollutants [3]	Observations	Visual Inspections	Continuous throughout the construction period	—

(1) Grab samples shall not be collected at the same time each day to get a complete representation of variations in the receiving water.
(2) Pollutants shall be analyzed using the analytical methods described in 40 Code of Federal Regulations Part 136; where no methods are specified for a given pollutant, the method shall be approved by Central Valley Water Board staff.
(3) Visible construction-related pollutants include oil, grease, foam, fuel, petroleum products, and construction-related, excavated, organic or earthen materials.

A surface water monitoring report shall be submitted to the Central Valley Water Board Contact indicated in this Certification within two weeks of initiation of sampling and every two weeks thereafter. In reporting the monitoring data, the Applicant shall arrange the data in tabular form so that the sampling locations, date, constituents, and concentrations are readily discernible. The data shall be summarized in such a manner to illustrate clearly whether the project complies with Certification requirements. The report shall include surface water sampling results, visual observations, and identification of the turbidity increase in the receiving water applicable to the natural turbidity conditions specified in the turbidity criteria below.

If no monitoring is conducted, the Applicant shall submit a written statement to the Central Valley Water Board Contact indicated in the Certification state, "No monitoring was required."

5. The Central Valley Water Board adopted a *Water Quality Control Plan for the Sacramento River and San Joaquin River Basins*, Fourth Edition, revised October 2011 (Basin Plan) that designates beneficial uses, establishes water quality objectives, and contains implementation programs and policies to achieve those objectives for all waters addressed through the plan. Turbidity and settleable matter limits are based on water quality objectives contained in the Basin Plan and are part of this Certification as follows:

a) Activities shall not cause turbidity increases in surface water to exceed:
   i. where natural turbidity is less than 1 Nephelometric Turbidity Units (NTUs), controllable factors shall not cause downstream turbidity to exceed 2 NTUs;
   ii. where natural turbidity is between 1 and 5 NTUs, increases shall not exceed 1 NTU;
   iii. where natural turbidity is between 5 and 50 NTUs, increases shall not exceed 20 percent;
   iv. where natural turbidity is between 50 and 100 NTUs, increases shall not exceed 10 NTUs; and
   v. where natural turbidity is greater than 100 NTUs, increases shall not exceed 10 percent.

   Except that these limits will be eased during in-water working periods to allow a turbidity increase of 15 NTUs over background turbidity. In determining compliance with the above limits, appropriate averaging periods may be applied provided that beneficial uses will be fully protected. Averaging periods may only be used with prior approval of the Central Valley Water Board staff.

b) Activities shall not cause settleable matter to exceed 0.1 mL/L in surface waters as measured in surface waters within 300 feet downstream of the project.

6. The Applicant shall notify the Central Valley Water Board immediately if the above criteria for turbidity, settleable matter, or other water quality objectives are exceeded.

7. In-water work shall occur during periods of no flow and no precipitation.

8. Refueling of equipment within the floodplain or within 300 feet of the waterway is prohibited. If critical equipment must be refueled within 300 feet of the waterway, spill prevention and countermeasures must be implemented to avoid spills. Refueling areas shall be provided with secondary containment including drip pans and/or placement or absorbent material. No hazardous materials, pesticides, fuels, lubricants, oils, hydraulic fluids, or other construction-related potentially hazardous substances should be stored within a floodplain or within 300 feet of a waterway. The Applicant must perform frequent inspections of construction equipment prior to utilizing it near surface waters to ensure leaks from the equipment are not occurring and are not a threat to water quality.

9. The Applicant shall develop and maintain onsite a project-specific Spill Prevention, Containment and Cleanup Plan outlining the practices to prevent, minimize, and/or clean up potential spills during construction of the project. The Plan must detail the project elements, construction equipment types and location, access and staging and construction sequence. The Plan must also address the potential of responding to a spill or prevention of spills occurring within the project site.

10. Silt fencing, straw wattles, or other effective management practices must be used along the construction zone to minimize soil or sediment along the embankments from migrating into the waters of the United States through the entire duration of the project.

11. The use of netting material (e.g., monofilament-based erosion blankets) that could trap aquatic dependent wildlife is prohibited within the project area.

12. All areas disturbed by project activities shall be protected from washout or erosion.

13. All temporarily affected areas shall be restored to pre-construction contours and conditions upon completion of construction activities.

14. All materials resulting from the project shall be removed from the site and disposed of properly.

15. This Certification does not allow permanent water diversion of flow from the receiving water. This Certification is invalid if any water is permanently diverted as a part of the project.

16. The discharge of petroleum products or other excavated materials to surface water is prohibited. Activities shall not cause visible oil, grease, or foam in the receiving water. The Applicant shall notify the Central Valley Water Board immediately of any spill of petroleum products or other organic or earthen materials.

17. If unanticipated discharges to the waters of the United States and/or soil occur, the Applicant shall notify the Central Valley Water Board Contact indicated in this Certification in writing within five (5) calendar days of occurrence. Unanticipated discharges may include, but are not limited to, any construction materials, hazardous materials, pesticides, fuels, lubricants, oils, hydraulic fluids, raw cement, concrete, asphalt, paint, coating material, drilling fluids, or other construction-related potentially hazardous substances.

18. The Applicant shall obtain coverage under the NPDES General Permit for Storm Water Discharges Associated with Construction and Land Disturbance Activities Order No. 2009-0009-DWQ for discharges to surface waters comprised of storm water associated with construction activity, including, but not limited to, demolition, clearing, grading, excavation, and other land disturbance activities of one or more acres, or where projects disturb less than one acre but are part of a larger common plan of development that in total disturbs one or more acres.

19. The Conditions in this Certification are based on the information in the attached "Project Information Sheet." If the actual project, as described in the attached Project Information Sheet, is modified or changed, this Certification is no longer valid until amended by the Central Valley Water Board.

20. In the event of any violation or threatened violation of the conditions of this Certification, the violation or threatened violation shall be subject to any remedies, penalties, process, or sanctions as provided for under state and federal law. The applicability of any state law authorizing remedies, penalties, process, or sanctions for the violation or threatened violation constitutes a limitation necessary to ensure compliance with this Certification.

(a) If the Applicant or a duly authorized representative of the project fails or refuses to furnish technical or monitoring reports, as required under this Certification, or falsifies any information provided in the monitoring reports, the applicant is subject to civil liability, for each day of violation, and/or criminal liability.

(b) In response to a suspected violation of any condition of this Certification, the Central Valley Water Board may require the Applicant to furnish, under penalty of perjury, any technical or monitoring reports the Central Valley Water Board deems appropriate, provided that the burden, including cost of the reports, shall be in reasonable relationship to the need for the reports and the benefits to be obtained from the reports.

(c) The Applicant shall allow the staff(s) of the Central Valley Water Board, or an authorized representative(s), upon the presentation of credentials and other documents, as may be required by law, to enter the project premises for inspection, including taking photographs and securing copies of project-related records, for the purpose of assuring compliance with this Certification and determining the ecological success of the project.

21. The Applicant shall provide a Notice of Completion (NOC) no later than 30 days after the project completion. The NOC shall demonstrate that the project has been carried out in accordance with the project description in the Certification and in any amendments approved. The NOC shall include a map of the project location(s), including final boundaries of any on-site restoration area(s), if appropriate, and representative pre and post construction photographs. Each photograph shall include a descriptive title, date taken, photographic site, and photographic orientation.

CENTRAL VALLEY WATER BOARD CONTACT:

Trevor Cleak, Environmental Scientist
Central Valley Regional Water Quality Control Board
11020 Sun Center Drive, Suite 200
Rancho Cordova, CA 95670-8114
tcleak@waterboards.ca.gov
(916) 464-4684

CALIFORNIA ENVIRONMENTAL QUALITY ACT:

The California Department of Transportation is the Lead Agency responsible for compliance with the California Environmental Quality Act for the Vertical Clearance Improvement Project pursuant to § 21000 et seq. of the Public Resources Code. The California Department of Transportation approved the Negative Declaration on 1 November 2011. The California Department of Transportation filed a Notice of Determination with the State Clearinghouse on 8 November 2011 (State Clearinghouse Number 2011072035).

The Central Valley Water Board is a responsible agency for the project. The Central Valley Water Board has determined that the Negative Declaration is in accordance with the requirements of the California Environmental Quality Act.

The Central Valley Water Board has reviewed and evaluated the impacts to water quality identified in the Negative Declaration. The avoidance measures discussed in the Negative Declaration to minimize project impacts are required by this Certification.

With regard to the remaining impacts identified in the Negative Declaration, the corresponding avoidance, minimization, and/or mitigation measures proposed are within the responsibility and jurisdiction of other public agencies.

WATER QUALITY CERTIFICATION:

I hereby issue an Order certifying that any discharge from the California Department of Transportation, Vertical Clearance Improvement Project (WDID#5A31CR00341) will comply with the applicable provisions of § 301 ("Effluent Limitations"), § 302 ("Water Quality Related Effluent Limitations"), § 303 ("Water Quality Standards and Implementation Plans"), § 306 ("National Standards of Performance"), and § 307 ("Toxic and Pretreatment Effluent Standards") of the Clean Water Act. This discharge is also regulated under State Water Resources Control Board Water Quality Order No. 2003-0017 DWQ "Statewide General Waste Discharge Requirements For Dredged Or Fill Discharges That Have Received State Water Quality Certification (General WDRs)".

Except insofar as may be modified by any preceding conditions, all Certification actions are contingent on (a) the discharge being limited and all proposed mitigation being completed in compliance with the conditions of this Certification, the California Department of Transportation's application package, and the attached Project Information Sheet, and (b) compliance with all applicable requirements of the *Water Quality Control Plan for the Sacramento River and San Joaquin River Basins*, Fourth Edition, revised October 2011.

for Pamela C. Creedon
Executive Officer

Enclosure: Project Information

cc: Distribution List, page 11

PROJECT INFORMATION SHEET

Application Date: 15 October 2012

Applicant: Samuel Jordan
California Department of Transportation
703 B Street
Marysville, CA 95901

Applicant Representative: Kelli Angell
California Department of Transportation
703 B Street
Marysville, CA 95901

Project Name: Vertical Clearance Improvement Project

Application Number: WDID#5A31CR00341

Type of Project: Highway improvement project

Timeframe of Project Implementation: 1 May 2013 through 1 March 2017

Project Location: Section 16, Township 11 North, Range 7 East, MDB&M.
Start: Latitude: 38°48'37.64"N and Longitude: 121°11'47.73" W
End: Latitude: 39°10'30.49"N and Longitude: 120°51'28.84" W

County: Placer County

Receiving Water(s) (hydrologic unit): Unnamed drainages, Sacramento/San Joaquin Hydrologic Basin, Valley-American Hydrologic Unit #519.21, Lower American HSA

Water Body Type: Streambed

Designated Beneficial Uses: The *Water Quality Control Plan for the Sacramento River and San Joaquin River Basins*, Fourth Edition, revised October 2011 (Basin Plan) has designated beneficial uses for surface and ground waters within the region. Beneficial uses that could be impacted by the project include, but are not limited to: Municipal and Domestic Water Supply (MUN); Agricultural Supply (AGR); Industrial Supply (IND); Hydropower Generation (POW); Groundwater Recharge (GWR); Water Contact Recreation (REC-1); Non-Contact Water Recreation (REC-2); Warm Freshwater Habitat (WARM); Cold Freshwater Habitat (COLD); Preservation of Biological Habitats of Special Significance (BIOL); Rare, Threatened, or Endangered Species (RARE); Migration of Aquatic Organisms (MIGR); Spawning, Reproduction, and/or Early Development (SPWN); and Wildlife Habitat (WILD). A comprehensive and specific list of the beneficial uses applicable for the project area can be found at http://www.waterboards.ca.gov/centralvalley/water_issues/basin_plans/index.shtml.

303(d) List of Water Quality Limited Segments: Unnamed drainages located within the Interstate 80 right-of-way of are the receiving waters for the Vertical Clearance Improvement Project. The unnamed drainages are not listed on the 303(d) list. This project does not impact an already impaired water body. The most recent list of approved water quality limited segments is found at:
http://www.waterboards.ca.gov/water_issues/programs/tmdl/integrated2010.shtml

Project Description: The Vertical Clearance Improvement Project consists of increasing the vertical clearance of eight overpasses and one underpass on Interstate 80 in Placer County. The project starts at the Brace Road overcrossing in Loomis and ends at the Magra Road overcrossing in Colfax.

Associated work on three of the overpasses will impact waters of the United States by upgrading the drainage facilities as summarized in Table 2. The upgraded drainage facilities will not increase length or diameter, or add additional capacity.

Table 2

Location	New Culvert		Number of Drainage Inlets to be Replaced
	Diameter (inches)	Length (feet)	
Horseshoe Bar Road	12	30	1
Newcastle Road	24	30	-
Weimar Cross Road	8	70	-
	12	75	-

Project activities on the other six structures will not impact waters of the United States. No wet concrete will be placed into waters of the United States. The drainages will be dry during construction.

The project will temporarily impact less than 0.01 acre/ 90 linear feet of waters of the United States.

Preliminary Water Quality Concerns: Construction activities may impact surface waters with increased turbidity and settleable matter.

Proposed Mitigation to Address Concerns: The Applicant will implement Best Management Practices to control sedimentation and erosion. All temporary affected areas will be restored to pre-construction contours and conditions upon completion of construction activities. The Applicant will conduct turbidity and settleable matter testing during in-water work, stopping work if Basin Plan criteria are exceeded or are observed.

Excavation/Fill Area: Approximately 9.5 cubic yards of culverts will be excavated from less than 0.01 acre of waters of the United States.

Approximately 9.5 cubic yards of culverts will be placed into less than 0.01 acre of waters of the United States.
Dredge Volume: None

United States Army Corps of Engineers File Number: Non-Reporting

United States Army Corps of Engineers Permit Type: Nationwide Permit #18

California Department of Fish and Wildlife Lake or Streambed Alteration Agreement: The Applicant did not apply for a Lake or Streambed Alteration Agreement.

Possible Listed Species: Valley elderberry longhorn beetle and California red legged frog.

Status of CEQA Compliance: The California Department of Transportation approved a Negative Declaration on 1 November 2011. The California Department of Transportation filed a Notice of Determination with the State Clearinghouse on 8 November 2011 (State Clearinghouse Number 2011072035).

The Central Valley Water Board filed a Notice of Determination with the State Clearinghouse as a lead agency within five (5) days of the date of this Certification.

Compensatory Mitigation: The Central Valley Water Board is not requesting compensatory mitigation for the Vertical Clearance Improvement Project.

Application Fee Provided: Total fees of $1,794.00 have been submitted to the Central Valley Water Board as required by § 3833(b)(3)(A) and § 2200(a)(3) of the California Code of Regulations.

DISTRIBUTION LIST

Leah Fisher
United States Army Corps of Engineers
Sacramento District Office
Regulatory Division
1325 J Street, Suite 1350
Sacramento, CA 95814-2922

Bill Jennings
CA Sportfishing Protection Alliance
3536 Rainier Avenue
Stockton, CA 95204

Bill Orme (Electronic copy only)
401 Certification and Wetlands Unit Chief
State Water Resources Control Board

Jason A. Brush (Electronic copy only)
Wetlands Office Supervisor (WTR-8)
United States Environmental Protection Agency

Kelli Angell
California Department of Transportation
703 B Street
Marysville, CA 95901

U. S. Army Corps of Engineers

South Pacific Division – Non Reporting

Nationwide Permit Pre-Construction Notification (PCN) Form

This form integrates requirements of the U. S. Army Corps of Engineers Nationwide Permit Program within the South Pacific Division (SPD), including General and Regional Conditions. You MUST fill out all boxes related to the work being done. Fillable boxes in this form expand if additional space is needed.

Box 1 Project Name Vertical Clearance Improvement Project			
Applicant Name Samuel Jordan		**Applicant Title** Project Manager	
Applicant Company, Agency, etc. California Department of Transportation		**Applicant's internal tracking number** (if any) EA: 03-3E100/EFIS: 0300000473	
Mailing Address **703 B Street, Marysville, CA 95901**			
Work Phone with area code 530-740-4920	Mobile Phone with area code	Home Phone with area code	Fax # with area code
E-mail Address Samuel_Jordan@dot.ca.gov	Relationship of applicant to property: ☒ Owner ☐ Purchaser ☐ Lessee ☐ Other:		
Application is hereby made for verification that subject regulated activities associated with subject project qualify for authorization under a U.S. Army Corps of Engineers Nationwide Permit or Permits as described herein. I certify that I am familiar with the information contained in this application and, that to the best of my knowledge and belief, such information is true, complete, and accurate. I further certify that I possess the authority to undertake the proposed activities. I hereby grant to the agency to which this application is made the right to enter the above-described location to inspect the proposed, in-progress, or completed work. I agree to start work only after all necessary permits have been received and to comply with all terms and conditions of the authorization.			
Signature of applicant Samuel Jordan		Date (m/d/yyyy) 02/13/13	

If anyone other than the person named as the Applicant will be in contact with the U. S. Army Corps of Engineers representing the Applicant regarding this project during the permit process, Box 2 MUST be filled out.

Box 2 Authorized Agent/Operator Name Kelli Angell		**Agent/Operator Title** Project Biologist	
Agent/Operator Company, Agency, etc. California Department of Transportation		E-mail Address Kelli_Angell@dot.ca.gov	
Mailing Address 703 B Street, Marysville, CA 95901			
Work Phone with area code 530-741-4486	Mobile Phone with area code n/a	Home Phone with area code n/a	Fax # with area code 530-741-4457
I hereby authorize the above named authorized agent to act in my behalf as my agent in the processing of this application and to furnish, upon request, supplemental information in support of this permit application. I understand that I am bound by the actions of my agent and I understand that if a federal or state permit is issued, I, or my agent, must sign the permit.			
Signature of applicant		Date (m/d/yyyy)	
I certify that I am familiar with the information contained in this application, and that to the best of my knowledge and belief, such information is true, complete, and accurate.			
Signature of authorized agent Samuel Jordan		Date (m/d/yyyy) 02/13/13	

Revised March 21, 2012. For the most recent version of this form, visit your Corps District's Regulatory website.

Box 3 Name of property owners(s), if other than applicant:		
Owner Title	**Owner Company, Agency etc.**	
Mailing Address		
Work Phone with area code	Mobile Phone with area code	Home Phone with area code

Box 4 Name of contractor(s) (if known): Unknown at this time.		
Contractor Title	**Contractor Company, Agency, etc.**	
Mailing Address		
Work Phone with area code	Mobile Phone with area code	Home Phone with area code

Box 5 Site Number 1 of 3. Project location(s), including street address, city, county, state, zip code where proposed activity will occur:

The project is located in Placer County on State Route (SR) 80, from the town of Loomis, CA to the town of Magra, CA. The project is located between postmile (PM) 8.72 at the Horseshoe Bar Road overcrossing and PM 37.9 at Weimar Road just east of Weimar. Site number 1 is at the Horseshoe Bar Road Overcrossing. See Attachment A for project location vicinity map.

Waterbody (if known, otherwise enter "an unnamed tributary to"):

Tributary to what known, downstream waterbody: ephemeral roadside drainage

Latitude & Longitude (D/M/S, DD, or UTM with Zone): 38.825211/-121.17878	Section, Township, Range: T11N, R7E, S10
County Assessor parcel number (include county name): Project within Caltrans Right of Way	USGS Quadrangle map name: Rocklin
Watershed (HUC and watershed name[1]): HUC: 18020111, Lower American River [1]http://water.usgs.gov/GIS/regions.html	Size of permit area or project boundary: 8.6 acres linear feet

Directions to the project location and other location descriptions, if known:

Driving directions to Horseshoe Bar Road Overcrossing in Loomis, CA from Sacramento:

1. I-80 Business Eastbound
2. Take exit 110 towards Loomis
3. Turn left onto Horseshoe Bar Road
4. Turn left to stay onto Horseshoe Bar Road

Nature of Activity (Description of project, include all features):

The proposed project will raise the vertical clearance of the Horseshoe Bar Road Overcrossing which will require the replacement of an existing drainage inlet with a Type GO drainage inlet and grate type

Revised March 21, 2012. For the most recent version of this form, visit your Corps District's Regulatory website.

24-12X. The existing 12" culvert will be replaced in-kind with 18.7' of 12" Alternative Pipe Culvert (APC). An alternative flared end section will be placed on the end of the newly placed culvert. Rock slope protection (between 25 – 200 lbs.) will be placed in front of the culvert to prevent erosion. In order to prevent parking within the loop ramp on the northeast quadrant of the intersection, the drainage ditch will be extended (see Attachment B Map Sheet 1 and Drainage Plan 2, Map D-2).

Project Purpose (Description of the reason or purpose of the project):
The purpose of this project is to enable over-height military and commercial permit vehicles to move continuously along I-80 by increasing the vertical clearance height on nine bridge structures. The project is needed in order to meet Federal Highway Administration (FHWA) requirements and the U.S. Department of Defense requirements for Interstate Systems, as well as Caltrans standards.

Site Number 2 of 3. Project location(s), including street address, city, county, state, zip code where proposed activity will occur:

The project is located in Placer County on State Route (SR) 80, from the town of Loomis, CA to the town of Magra, CA. The project is located between postmile (PM) 8.72 at the Horseshoe Bar Road overcrossing and PM 29.31 at Weimar Road overcrossing. Site number two is at the Newcastle Road Overcrossing. See Attachment A for project location vicinity map.

Waterbody (if known, otherwise enter "an unnamed tributary to"):

Tributary to what known, downstream waterbody: ephemeral roadside drainage

Latitude & Longitude (D/M/S, DD, or UTM with Zone): 38.873137/-121.131473	Section, Township, Range: T12N R8E S19
County Assessor parcel number (include county name): Project within Caltrans Right of Way	USGS Quadrangle map name: Gold Hill
Watershed (HUC and watershed name[1]): Upper Coon Creek-Upper Auburn River (18020127) [1]http://water.usgs.gov/GIS/regions.html	Size of permit area or project boundary: 11.88 acres linear feet

Directions to the project location and other location descriptions, if known:

Driving directions to Newcastle Road Overcrossing in Newcastle, CA from Sacramento:

1. I-80 Business Eastbound
2. Take exit 115 to Newcastle Road Overcrossing

Nature of Activity (Description of project, include all features):
The proposed project will require culvert and drainage inlets (DI) to be replaced north of the Newcastle Overcrossing. The DI (see number 1 on Attachment B, Map Sheet 3) will be removed and replaced with Type GO DI and Grate type 24-12. The existing 24 inch culvert crossing the eastbound freeway will be removed and replaced with 67.6 feet of 24 inch Alternative Pipe Culvert. The DI located on the northwest quadrant (number 3 on Attachment B map) of the intersection will be removed and replaced with Type GO (Mod-CT1) and Grate Type 24-12. The existing 24 inch culvert crossing the westbound freeway lane will be removed and replaced with 96.6 feet of 24 inch Alternative Pipe Culvert. Another DI, also located on the northwest quadrant (number 5 on Attachment B map), will also be removed and replaced with Type G2 (Mod) DI and Grate Type 24-12. A 36" Manhole and 24" Cover will also be placed at this location. See Attachment B, Map Sheet 3 and

Revised March 21, 2012. For the most recent version of this form, visit your Corps District's Regulatory website.

Drainage Plan 11 on Map D-5.

Project Purpose (Description of the reason or purpose of the project):

The purpose of this project is to enable over-height military and commercial permit vehicles to move continuously along I-80 by increasing the vertical clearance height on nine bridge structures. The project is needed in order to meet Federal Highway Administration (FHWA) requirements and the U.S. Department of Defense requirements for Interstate Systems, as well as Caltrans standards.

Site Number 3 of 3. Project location(s), including street address, city, county, state, zip code where proposed activity will occur:

The project is located in Placer County on State Route (SR) 80, from the town of Loomis, CA to the town of Magra, CA. The project is located between postmile (PM) 8.72 at the Horseshoe Bar Road overcrossing and PM 29.31 at Weimar Road overcrossing. Site number three is at the Weimar Road Overcrossing. See Attachment A for project location vicinity map.

Waterbody (if known, otherwise enter "an unnamed tributary to"):

Tributary to what known, downstream waterbody: ephemeral roadside drainage

Latitude & Longitude (D/M/S, DD, or UTM with Zone): 39.033437/-120.9759	Section, Township, Range: T14N R9E S21
County Assessor parcel number (include county name): Project within Caltrans Right of Way	USGS Quadrangle map name: Colfax
Watershed (HUC and watershed name[1]): Upper Bear River (HUC 18020126) [1]http://water.usgs.gov/GIS/regions.html	Size of permit area or project boundary: 11.88 acres linear feet

Directions to the project location and other location descriptions, if known:

Driving directions to Weimar Crossroad Overcrossing from Sacramento:

1. I-80 Business Eastbound
2. Take exit 131, the Weimar Crossroad Overcrossing

Nature of Activity (Description of project, include all features):

The proposed project will lower the existing eastbound I-80 to meet vertical clearance requirements at Weimar Road. This will require replacement of existing drainage inlets (DI) and culverts on the eastbound side of the freeway. The slotted drain and DI will be removed and replaced with Type GO (mod-CT1) DI and Grate Type 24-12 (see number 1 on Attachment B, Map Sheet 4). The DI on the eastbound lane will be removed and replaced with Type G1 DI and Grate Type 24-12 (see number 2 on Attachment B, Map Sheet 4). The existing 8 inch culvert that crosses I-80 will be removed and replaced with an 8 inch by 70 foot perforated pipe (see number 3 on Attachment B, Map Sheet 4). The existing 12 inch culvert that crosses the eastbound on-ramp will be removed and replaced with a 12 inch by 75 foot culvert (see number 5 on Attachment B, Map Sheet 4). A new headwall will be placed at the end section of the above described culvert (see number 4 on Attachment B, Map Sheet 4). See Attachment B, Map Sheet 4 and Drainage Plan 16, Map D-5.

Box 6 Reason(s) for discharge into Waters of the United States (Description of why dredged and/or fill material needs to be placed in Waters of the United States):

Culvert replacements, drainage inlet replacements, and placement of rock slop protection.

Proposed discharge of dredge and/or fill material. Indicate total surface area in **acres** and **linear feet** (where appropriate) of the proposed impacts to Waters of the United States, indicate water body type (tidal wetland, non-tidal wetland, riparian wetland, ephemeral stream/river, intermittent stream/river, perennial stream/river, pond/lake, vegetated shallows, bay/harbor, lagoon, ocean, etc.), and identify the impact(s) as permanent and/or temporary for each requested Nationwide Permit[1]:

Revised March 21, 2012. For the most recent version of this form, visit your Corps District's Regulatory website.

[1]Enter the intended permit number(s). See Nationwide Permit regulations for permit numbers and qualification information: http://www.usace.army.mil/Missions/CivilWorks/RegulatoryProgramandPermits/NationwidePermits.aspx

Water Body Type	Requested NWP Number: 18				Requested NWP Number:				Requested NWP Number:			
	Permanent		Temporary		Permanent		Temporary		Permanent		Temporary	
	Area	Length	Area	Length	Area	Length	Area	Length	Area	Length	Area	Length
Ephemeral roadside drainage at Horseshoe Bar Road			0.002 acres	18.7 feet								
Ephemeral roadside drainage at Newcastle Road			0.002 acres	164.2 feet								
Ephemeral roadside drainage at Weimar Crossroad			0.002 acres	145.0 feet								
Total:			**0.006 acres**	**327.9 feet**								

Total volume (in cubic yards) and type(s) of material proposed to be dredged from or discharged into Waters of the United States:

Material Type	Total Volume Dredged	Total Volume Discharged
Rock Slope Protection (RSP)	37.5 cubic yards	37.5 cubic yards
Clean spawning gravel		
River rock		
Soil/Dirt/Silt/Sand/Mud		
Concrete		1.0 cubic yards
Structure		1.0 cubic yards
Stumps/Root wads		
Other:		
Total:	37.5 cubic yards	39.5 cubic yards

Activity requires a written waiver to exceed specified limits of the Nationwide Permit? ☐ YES ☒ NO
If yes, provide Nationwide Permit number and name, limit to be exceeded, and rationale for each requested waiver:

Activity will result in the loss of greater than ½-acre of Waters of the United States? ☐ YES ☒ NO
If yes, provide an electronic copy (compact disc) or multiple hard copies (7) of the complete PCN for appropriate Federal and State Pre-discharge Notification (See General Condition #31, Pre-construction Notification, Agency Coordination, Section 2 and 4):

Describe direct and indirect effects caused by the activity and how the activity has been designed (or modified) to have minimal adverse effects on the aquatic environment (See General Condition #31, Pre-construction Notification, District Engineer's Decision, Section 1):

The proposed project would be constructed during the dry season and project work is being conducted in ephemeral roadside drainage channels. The culvert replacements will temporarily affect other waters of the U.S. by replacing various culverts in ephemeral roadside drainage channels. The indirect effects that are expected to occur include minor disturbances to already highly disturbed ephemeral roadside drainage channels. The following minimization measures have been incorporated into the project design to minimize direct and indirect effects caused by the project:

- Work within waters will be conducted between July 1 and October 1;
- clearing of trees and vegetation will be confined to the minimal areas necessary for construction activities;
- environmentally sensitive area (ESA) fencing will be installed to protect biologically sensitive areas;
- following completion of construction activities all construction debris will be removed;
- areas temporarily disturbed will be re-vegetated at the conclusion of construction with permanent erosion control composed of native grasses and forbes (as part of the construction contract).

Attachment A for a project location vicinity map;
Attachment B, Map Sheets 1, 3, and 4 for aerial views of the project area;
Attachment C for Drainage Plans and Drainage Profiles 2, 11, and 16
Attachment D Pre-Construction Photos

Details Attachment C:
Drainage Plan D-2 – Horseshoe Bar Road
Drainage Plan D-5 – Newcastle Road
Drainage Plan D-8 – Weimar Crossroad

Drainage Profile Map DP-1 – Horseshoe Bar Road
Drainage Profile Map DP-12 – Newcastle Road
Drainage Profile Map DP-14 – Weimar Crossroad

Potential cumulative impacts of proposed activity (if any): When viewed in connection with the effects of past, current, and probable future projects, the potential, incremental effects to wetlands and other waters by the proposed project would not be cumulatively considerable.

Required drawings and figures (see each U. S. Army Corps of Engineers District's Minimum Standards Guidance):

Vicinity map: ☒ Attached (or mail copy separately if applying electronically)

To-scale Plan view drawing(s): ☒ Attached (or mail copy separately if applying electronically)

To-scale elevation and/or Cross Section Drawings(s): ☒ Attached (or mail copy separately if applying electronically)

Numbered and dated pre-project color photographs: ☒ Attached (or mail copy separately if applying electronically)

Sketch drawing(s) or map(s): ☒ Attached (or mail copy separately if applying electronically)

Has a wetland/waters of the U.S. delineation been completed?
☐ Yes, Attached[2] (or mail copy separately if applying electronically) ☒ No
If a delineation has been completed, has it been verified in writing by the Corps?

☐ Yes, Date of approved jurisdictional determination (m/d/yyyy): Corps file number: ☐ No
[2]If available, provide ESRI shapefiles (NAD83) for delineated waters

For proposed discharges of dredged material resulting from navigation dredging into inland or near-shore waters of the U.S. (including beach nourishment), please attach[3] a proposed Sampling and Analysis Plan (SAP) prepared according to Inland Testing Manual (ITM) guidelines (including Tier I information, if available), or if disposed offshore, a proposed SAP prepared according to the Ocean Disposal Manual.
[3]Or mail copy separately if applying electronically

Is any portion of the work already complete? ☐ YES ☒ NO
If yes, describe the work:

Box 7 Authority
Is Section 10 of the Rivers and Harbors Act applicable?: ☐ YES ☒ NO
Is Section 404 of the Clean Water Act applicable?: ☒ YES ☐ NO

Is the project located in U. S. Army Corps of Engineers property or easement?: ☐ YES ☒ NO
If yes, has Section 408 process been initiated?: ☐ YES ☐ NO
Would the project affect a U. S. Army Corps of Engineers structure?: ☐ YES ☒ NO
If yes, has Section 408 process been initiated?: ☐ YES ☐ NO

Is the project located on other Federal Lands (USFS, BLM, etc.)?: ☐ YES ☒ NO
Is the project located on Tribal Lands?: ☐ YES ☒ NO

Box 8 Is the discharge of fill or dredged material for which Section 10/404 authorization is sought part of a larger plan of development?: ☐ YES ☒ NO

If discharge of fill or dredged material is part of development, name and proposed schedule for that larger development (start-up, duration, and completion dates):

Location of larger development (if discharge of fill or dredged material is part of a plan of development, a map of suitable quality and detail of the entire project site should be included):

Box 9 Measures taken to avoid and minimize impacts to waters of the United States:

Work windows, minimal tree/vegetation removal, ESA fencing, and areas temporarily disturbed will be re-vegetated at the conclusion of construction with permanent erosion control composed of native grasses and forbes.

Box 10 Proposed Compensatory Mitigation related to fill/excavation and dredge activities. Indicate in **acres** and **linear feet** (where appropriate) the total quantity of Waters of the United States proposed to be created, restored, enhanced and/or preserved for purposes of providing compensatory mitigation. Indicate water body type (tidal wetland, non-tidal wetland, riparian wetland, ephemeral stream/river, intermittent stream/river, perennial stream/river, pond/lake, vegetated shallows, bay/harbor, lagoon, ocean, etc.) or non-jurisdictional (uplands[1]). Indicate mitigation type (permittee-responsible on-site/off-site, mitigation bank, or in-lieu fee program). If the mitigation is purchase of credits from a mitigation bank, indicate the bank to be used, if known:

[1] For uplands, please indicate if designed as an upland buffer.

Site Number	Water Body Type	Created		Restored		Enhanced		Preserved		Mitigation Type
		Area	Length	Area	Length	Area	Length	Area	Length	
1 – Horseshoe Bar Road	ephemeral		250 feet (length of ditch extension)	0.002	18.7 feet (culvert length)					
2 – Newcastle Road	ephemeral			0.002	164.2 feet (culvert length)					
3 – Weimar Crossing	ephemeral			0.002	145.0 feet (culvert length)					
Total:										

If no mitigation is proposed, provide detailed explanation of why no mitigation would be necessary: The project footprint is limited to Caltrans Right-of-Way within the highly disturbed I-80 corridor. The roadside drainages will be dry when construction is occurring due to their ephemeral nature. Vegetation clearing will occur only near bridge abutments (which will also allow for a vehicle safety clearance of approximately 40 feet) and limited vegetation removal will occur where slope angles are proposed to be increased due to the raising of the bridge structures. Orange protective fencing will be placed in strategic areas to limit encroachment of construction equipment and construction activity.

The following minimization measures have been incorporated into project design to minimize effects caused by the project:

- Work within waters will be conducted between July 1 and October 1;
- Clearing of trees and vegetation will be confined to the minimal areas necessary for construction activities;
- Environmentally sensitive area (ESA) fencing will be installed to protect biologically sensitive areas;
- Areas temporarily disturbed will be re-vegetated at the conclusion of construction with permanent erosion control composed of native grasses and forbes (as part of the construction contract).

If permittee-responsible mitigation is proposed, provide justification for not utilizing a Corps-approved mitigation bank or in-lieu fee program

Has a draft/conceptual mitigation plan been prepared in accordance with the April 10, 2008 Final

Revised March 21, 2012. For the most recent version of this form, visit your Corps District's Regulatory website.

Mitigation Rule[2] and District Guidelines?

[2]http://www.usace.army.mil/Missions/CivilWorks/RegulatoryProgramandPermits/mitig_info.aspx

[3]**Sacramento and San Francisco Districts**-http://www.spk.usace.army.mil/organizations/cespk-co/regulatory/pdf/Mitigation_Monitoring_Guidelines.pdf

[4]**Los Angeles District**-http://www.spl.usace.army.mil/regulatory/mmg_2004.pdf

[5]**Albuquerque District**-http://www.spa.usace.army.mil/reg/mitigation/SPA%20Final%20Mitigation%20Guidelines_OLD.pdf

☐ Yes, Attached (or mail copy separately if applying electronically) ☒ No

If no, a mitigation plan must be prepared and submitted, if applicable.

Mitigation site(s) Latitude & Longitude (D/M/S, DD, or UTM with Zone):	USGS Quadrangle map name(s):
Assessor Parcel Number(s):	Section(s), Township(s), Range(s):
Other location descriptions, if known:	
Directions to the mitigation location(s):	

Box 11 Threatened or Endangered Species

Please list any federally-listed (or proposed) threatened or endangered species or critical habitat (or proposed critical habitat) within the project area (include scientific names (e.g., Genus species), if known):

a. Valley elderberry longhorn beetle *(Desmocerus californicus dimorphus)*

b. California Red-legged frog *(Rana draytonii)*

c.

d.

e.

f.

Have surveys, using U.S. Fish and Wildlife Service/NOAA Fisheries protocols, been conducted?
☒ Yes, Report attached (or mail copy separately if applying electronically) ☐ No

If a federal-listed species would be impacted, please provide a description of the impact and a biological evaluation, if available
☐ Yes, Report attached (or mail copy separately if applying electronically) ☒ No

Has Section 7 consultation been initiated by another federal agency?
☐ Yes, Initiation letter attached (or mail copy separately if applying electronically) ☒ No

Has Section 10 consultation been initiated for the proposed project?
☐ Yes, Initiation letter attached (or mail copy separately if applying electronically) ☒ No

Has the USFWS/NOAA Fisheries issued a Biological Opinion?
☐ Yes, Attached (or mail copy separately if applying electronically) ☒ No

Letter of Concurrence received 9/29/2011

If yes, list date Opinion was issued (m/d/yyyy):

Box 12 Historic properties and cultural resources

Are any cultural resources of any type known to exist on-site? ☐ YES ☒ NO

Please list any historic properties listed (or eligible to be listed) on the National Register of Historic Places:

a.

b.

c.	d.
e.	f.

Has a cultural resource records search been conducted?
☒ Yes, Report attached (or mail copy separately if applying electronically) ☐ No

Has a cultural resource pedestrian survey been conducted for the site?
☒ Yes, Report attached (or mail copy separately if applying electronically) ☐ No

Has another federal agency been designated the lead federal agency for Section 106 consultation?
☒ Yes, Designation letter/email attached (or mail copy separately if applying electronically) ☐ No

Has Section 106 consultation been initiated by another federal agency?
☒ Yes, Initiation letter attached (or mail copy separately if applying electronically) ☐ No

Has a Section 106 MOA or PA been signed by another federal agency and the SHPO?
☐ Yes, Attached (or mail copy separately if applying electronically) ☒ No
If yes, list date MOA or PA was signed (m/d/yyyy):

Box 13 Section 401 Water Quality Certification:
Applying for certification? ☒ Yes, Attached (or mail copy separately if applying electronically) ☐ No

Certification issued? ☐ Yes, Attached (or mail copy separately if applying electronically) ☐ No
Certification waived? ☐ Yes, Attached (or mail copy separately if applying electronically) ☒ No
Certification denied? ☐ Yes, Attached (or mail copy separately if applying electronically) ☒ No

Exempted Activity? ☐ Yes ☒ No
Agency concurrence? ☐ Yes, Attached ☐ No (401 Certification sent to Water Board October 15, 2012 – will send 404 Non-Reporting form to Water Board per request, updated maps, and summary of project changes).
If exempt, state why:

Box 14 Coastal Zone Management Act
Is the project located within the Coastal Zone? ☐ Yes ☒ No

If yes, applying for a coastal commission-approved Coastal Development Permit?
☐ Yes, Attached (or mail copy separately if applying electronically) ☐ No

If no, applying for separate CZMA-consistency certification?
☐ Yes, Attached (or mail copy separately if applying electronically) ☒ No

Permit/Consistency issued? ☐ Yes, Attached (or mail copy separately if applying electronically) ☒ No

Exempt? ☐ Yes ☐ No
Agency concurrence? ☐ Yes, Attached ☐ No
If exempt, state why:

Box 15 List of other certification or approval/denials received from other federal, state, or local agencies for work described in this application:

Agency	Type Approval[4]	Identification Number	Date Applied	Dated Approved	Date Denied
State Water Resources Control Board	401 Water Quality Certification		9/7/12		
U.S. Fish and Wildlife Service	Letter of Concurrence		8/30/11	9/29/12	

[4]Would include but is not restricted to zoning, building, and flood plain permits

Nationwide Permit General Conditions (GC) checklist:

(http://www.gpo.gov/fdsys/pkg/FR-2012-02-21/pdf/2012-3687.pdf)

Check	General Condition	Rationale for compliance with General Condition
☒	1. Navigation	The proposed project will not have an adverse effect on navigation.
☒	2. Aquatic Life Movements	The proposed project will not disrupt life cycle movements of aquatic species.
☒	3. Spawning Areas	There are no spawning areas within the project limits.
☒	4. Migratory Bird Breeding Areas	The waters within the proposed project do not provide habitat for breeding migratory birds.
☒	5. Shellfish Beds	There are no concentrated shellfish populations within the project limits.
☒	6. Suitable Material	No trash, debris, car bodies, asphalt, or other unsuitable material will be placed in waters of the U.S., and all fill material will be free from toxic pollutants in toxic amounts.
☒	7. Water Supply Intakes	There is no public water supply intake in or near the project area.
☒	8. Adverse Effects from Impoundments	The proposed project will not cause the impoundment of water.
☒	9. Management of Water Flows	The proposed project will not alter the pre-construction course, condition, capacity, or location of open waters. The project has been designed to withstand expected high flows and will not impede the passage of normal or high flows.
☒	10. Fills Within 100-Year Floodplains	The activity will comply with applicable FEMA-approved state local floodplain management requirements.
☒	11. Equipment	The proposed project will not require use of heavy equipment in wetlands or mudflats.
☒	12. Soil Erosion and Sediment Controls	Appropriate soil erosion and sediment controls will be used and maintained during construction.
☒	13. Removal of Temporary Fills	Temporary fills will be removed and the project area returned to pre-project conditions.
☒	14. Proper Maintenance	Any authorized fill will be properly maintained.
☒	15. Single and Complete Project	The activity is a single and complete project.
☒	16. Wild and Scenic Rivers	There are no National Wild or Scenic Rivers, nor any rivers officially designated by Congress as study river and currently in official study status, within the limits of construction.
☒	17. Tribal Rights	There are no tribal rights reserved in the project area and no tribal rights will be impaired.
☒	18. Endangered Species	See Box 11 above
☒	19. Migratory Bird and Bald and Golden Eagle Permits	The proposed project will not result in the take of any migratory birds, bald or golden eagles.
☒	20. Historic Properties	See Box 12 above
☒	21. Discovery of Previously Unknown Remains and Artifacts	The Corps will be immediately notified if any previously unknown remains or artifacts are discovered.
☒	22. Designated Critical Resource Waters	The project does not contain any designated Critical Resource Waters.
☒	23. Mitigation	See Box 10 above
☒	24. Safety of Impoundment Structures	The project does not include water impoundment structures.
☒	25. Water Quality	See Box 13 above
☒	26. Coastal Zone Management	See Box 14 above
☒	27. Regional and Case-by-Case Conditions	Caltrans will comply with any Regional or Case-by-Case conditions added by the Corps.
☒	28. Use of Multiple Nationwide Permits	The proposed project will not require multiple NWPs.
☒	29. Transfer of Nationwide Permit Verifications	Caltrans will retain ownership of the property on which the proposed project will be built.
☒	30. Compliance Certification	Caltrans will submit to the Corps a signed compliance certification upon completion of the project and any

		compensatory mitigation.
☒	31. Pre-Construction Notification	This PCN complies with GC 31.

Final Sacramento District NWP Regional Conditions (RC) for CA checklist:

(http://www.spk.usace.army.mil/Portals/12/documents/regulatory/nwp/2012_nwps/2012-NWP-RC-CA.pdf)

Check	Regional Condition	Rationale for compliance with Regional Condition
☒	1. Pre-construction Notification: The PCN shall also include: ☒ a. Written statement regarding avoidance and minimization; ☒ b. Drawings which include delineated WOTUS and OHWM, in accordance with the August 6, 2012 Special Public Notice: Final Map and Drawing Standards for the South Pacific Division Regulatory Program; and ☒ c. Pre-project photos on a plan-view drawing.	The PCN includes an avoidance & minimization statement, plan & cross-section drawings, and pre-project photos.
☒	2. Pre-construction Notification: A PCN shall be submitted for; ☒ a. All activities in a vernal pool ☒ b. All activities in the Primary and Secondary Zones of the Legal Delta, Sacramento River, and San Joaquin River, and immediate tributaries of these waters. ☒ c. All crossings of perennial and/or intermittent waters. ☒ d. All activities proposed within 100 feet of a known natural spring. ☒ e. All activities located in areas designated as EFH.	A PCN is required because the project proposes to use rock slope protection at Horseshoe Bar Road. The threshold for a non-reporting 18 requiring a PCN is placement of greater than 10 cy of material, greater than 1/10 acre of impact to waters, or any impact to wetlands.
☒	3. Recordation: The permittee shall record the NWP verification with the Register of Deeds.	The proposed project does not involve the designation of a preserve or a structure in navigable water.
☒	4. Avoided Waters: *Unless determined impracticable by the Corps, the permittee shall: ☒ a. Establish and maintain, in perpetuity, a preserve containing all avoided waters of the U.S.; ☒ b. Place all avoided waters of the U.S. and upland buffers into a separate parcel; and ☒ c. Establish permanent legal protection for all preserve parcels. *If the Corps determines that it is impracticable to require permanent preservation of the avoided waters, additional mitigation may be required.	All avoided waters will be protected by establishing Environmentally Sensitive Areas and will be appropriately fenced.
☒	5. Temporary Fill: The PCN shall include: ☒ Why avoidance of temporary impacts is not practicable; ☒ A description of the proposed temporary fill; ☒ A proposed plan for restoration, including a plan for the revegetation, if necessary. For all activities resulting in temporary fill within waters of the U.S., the permittee shall: ☒ a. Utilize material consisting of clean and	The attached PCN includes an Avoidance practicability statement. The project will not include temporary fills.

	washed gravel; ☒ b. Place a horizontal marker; and ☒ c. Remove all temporary fill within 30 days.	
☒	6. Stream Crossings: Unless determined to be impracticable by the Corps, the following criteria shall apply: ☒ a. Employ bridge designs that span the stream or river, or designs that use a bottomless arch culvert with a natural stream bed; ☒ b. Ensure that no more than minor impacts would occur to fish and wildlife passage or expected high flows; ☒ c. No construction activities shall occur within standing or flowing waters. Any proposed dewatering plans must be approved, in writing, by the Corps; and ☒ d. All bank stabilization activities associated with a road crossing shall comply with Regional Condition 19.	The project will not impact Federally-listed fish species habitat. No work will be done within standing or flowing waters. This project will not result in a reduction of bankfull width or depth of streams or negatively alter the flood control capacity.
☒	7. Lead Federal Agency: The lead Federal agency shall provide all documentation demonstrating previous consultation efforts.	Documentation for compliance with Section 7 of the ESA and Section 106 of the NHPA may be found in Box 11 and Box 12 of the PCN.
☒	8. Compliance Certificate: The permittee shall submit the following additional information: ☒ a. As-built drawings. ☒ b. Post-construction photos on a plan-view drawing.	Non-Reporting. As-built drawings and post-construction photographs will be submitted with the compliance certification as required under General Condition 30.
☒	9. Permittee Responsible Mitigation: Permittee shall submit a final comprehensive mitigation and monitoring plan prior to commencement of construction activities.	The activity not does involve permittee-responsible mitigation.
☒	10. Mitigation: Permittee shall complete construction of mitigation before or concurrent with commencement of project construction. Permittee shall submit proof of mitigation bank or ILF payment to the Corps prior to commencement of project construction.	No mitigation required. See Box 10 of this form and project "Note to File."
☒	11. Contractor Awareness: Permittee is responsible for contractor/worker awareness and shall ensure that a copy of the permit authorization and associated drawings are available and visible at the site until completion of construction.	A copy of the permit and drawings will be available for review at the project site.
☒	12. Limits of Disturbance: Permittee shall clearly identify the limits of disturbance in the field with highly visible markers.	The project limits will be identified in the field.
☒	13. Notification: Permittee shall notify the Corps 10 days prior to initiation of project construction.	Non-Reporting. The Corps will be notified 10 days prior to initiation of the authorized activity.
☒	14. Inspections: Permittee shall allow the Corps to inspect the authorized activity(s).	Corps representatives will be allowed to inspect the project and any avoidance/mitigation areas for compliance with NWP at any time.
☒	15. Mather Core Recovery Area (Sacramento County): NWP's (see list) revoked from use in vernal pools.	The activity is not located within the Mather Core Recovery Area.
☒	16. Legal Delta: NWP's (see list) revoked.	The activity does not involve impacts in the Legal Delta.
☒	17. Secondary Zone: Mitigation required in	The activity is not located within the Secondary Zone of

	Secondary Zone of the Legal Delta.	the Legal Delta.
☒ ☒	18. NWP 12: ☒ Shall not result in the draining of any wetland or WOTUS. ☒ Permittee shall remove and stockpile top 6-12" of topsoil. ☒ Permittee shall replace the topsoil and seed w/native vegetation. A PCN shall be submitted when: ☒ a. result in a discharge of fill into perennial or intermittent waters, wetlands, mudflats, vegetated shallows, riffle & pool complexes, sanctuaries, refuges, or coral reefs; ☒ b. result in a discharge of fill into greater than 100 linear feet of ephemeral WOTUS; ☒ c. includes the construction of a temporary or permanent access road, substation or foundation within WOTUS; or ☒ d. activity would not involve the restoration of all utility line trenches to pre-project contours and conditions.	The activity does not involve use of NWP 12.
☒	19. NWP's 13 and 14: ☒ Shall involve either the sole use of native vegetation or other bioengineering design techniques, or a combination of. PCN shall be submitted when: ☒ Bank stabilization involves hard-armoring or non-vegetated/non-bioengineered technique below the OHWM.	The activity does not involve use of NWP 13 and 14.
☒	20. NWP 23: Permittee shall submit a PCN for all activities, and must include a copy of the CE document and final agency determinations regarding compliance with ESA, EFH, and NHPA.	The activity does not involve the use of NWP 23.
☒	21. NWP 27: Permittee shall submit it a PCN when: ☒ Activity would result in a discharge of fill into perennial or intermittent waters, wetlands, mudflats, vegetated shallows, riffle & pool complexes, sanctuaries, refuges, or coral reefs; or ☒ Activity would result in a discharge of fill into greater than 100 linear feet of ephemeral WOTUS.	The activity does not involve the use of NWP 27.
☒	22. NWP's 29 and 39: Channelization or relocation of intermittent or perennial drainages is not authorized, except when relocation would result in a net increase in functions.	The activity will not involve NWPs 29 or 39.
☒	23. Waivers: 300 and 500 linear foot waivers must include: ☒ a. A narrative description of the stream describing adjacent vegetation community, wetland status, surrounding land use, water quality, cumulative impacts in the watershed, etc.; ☒ b. An analysis of the proposed impacts to the waterbody;	The activity will not require a 300 or 500 linear foot waiver.

	☒ c. Measures taken to avoid and minimize losses to WOTUS; and ☒ d. A compensatory mitigation plan.	
☒	24. NWP's 29, 39, 40, 42, and 43: The permittee shall establish and maintain upland vegetated buffers, at least 50′ in width, in perpetuity.	The activity does not involve the use of NWP's 29, 39, 40, 42, or 43.
☒	25. NWP 46: Discharge shall not cause the loss of greater than 0.5 acres of WOTUS or the loss of more than 300 linear feet of ditch.	The activity does not involve the use of NWP 46.
☒	26. All NWP's: All NWP's except (see list) are revoked for activities in histosols, fens, bogs and peatlands, and in wetlands contiguous with fens.	The activity would not occur in a histosols, fen, bog, peatland or wetland contiguous with a fen.

M e m o r a n d u m

Flex your power!
Be energy efficient!

To: JOSEPH E. DOWNING
BRANCH CHIEF
Structure Design Branch 3
Office of Bridge Design North
Division of Engineering Services

Date: April 12, 2012

File: 03-PLA-80- PM 37.78
Magra OC
Br. No. 19-0092
EA 03-3E1000

ATTN: Ali Asnaashari

From: **DEPARTMENT OF TRANSPORTATION**
DIVISION OF ENGINEERING SERVICES
Geotechnical Services – MS 5
Office of Geotechnical Design – North

Subject: Foundation Report (FR) for Magra Overcrossing

Introduction

Per your request dated February 15, 2015, the Office of Geotechnical Design-North (OGD-N), Branch A has prepared the Foundation Report (FR) for raising the Magra Overcrossing (Br. No. 19-0092) located on Interstate 80 at PM 37.78, in Placer County, California. The project proposes to raise six structures to meet vertical clearance requirements for permit vehicles along Interstate 80 between Roseville and the Nevada border.

Our Office has evaluated the site conditions and geology based on a review of the existing As-Built Plans, available geologic literature and geologic maps. A field investigation and laboratory testing was not performed for the FR.

Please note that the elevations shown on the As-Built plans were used to complete this report unless otherwise noted.

The following Department of Transportation, Caltrans records and resources were used for the FR:

- General Plan for the Magra Overcrossing (Br. No. 19-0092) dated September 20, 2011.
- As-Built General Plan for the Magra Overcrossing (Br. No. 19-0092) circa 1956.
- As-Built Foundation Plan for the Magra Overcrossing (Br. No. 19-0092) circa 1956.
- As-Built Abutments Plan for the Magra Overcrossing (Br. No. 19-0092) circa 1956.
- As-Built Bents Plan for the Magra Overcrossing (Br. No. 19-0092) circa 1956.
- As-Built Miscellaneous Details Plan for the Magra Overcrossing (Br. No. 19-0092) circa 1956.
- As-Built Log of Test Boring (LOTB) for the Magra Overcrossing (Br. No. 19-0092) dated October 1, 1956.

- Foundation Recommendations Memorandum by C. Marek and T. L. Sommers for the Magra Road Overcrossing (Br. No. 19-0092) dated December 18, 1955.
- Bridge Inspection Report by Anthony Fernandes for the Magra Road Overcrossing (Br. No. 19-0092) dated October 26, 2005.

Project Description

The current bridge was built in 1958. The structure was built as a continuous four span reinforced concrete (RC) girder structure supported with RC two-column bents and RC open-end seat abutments. All supports are founded on spread footings.

According to the General Plan, the existing columns will be cut and the bridge will be raised one foot and four inches.

Summary of Site Geology and Subsurface Conditions

Regional Setting and Area Geology

The project site is located within the northern section of the Sierra Nevada geomorphic province. The Sierra Nevada geomorphic province is approximately 65 to 160 kilometers in width. It is bounded on the west by the Great Valley province and on the east by the Basin and Range province. Formation of the Sierra Nevada geomorphic province began approximately 50 million years ago with the uplift of the Sierra Nevada batholith. Tectonic activity along the Basin and Range fault system located to the east of the Sierra Nevada Range, resulted in the asymmetric, westward tilting of the Sierra Nevada. The geomorphology of the Sierra Nevada is generally the result of extensive weathering and erosion occurring during uplift.

The Geologic Map of the Chico Quadrangle, scale 1:250,000, compiled by G. J. Saucedo and D. L. Wagner, 1992, California Geological Survey (formerly the Division of Mines and Geology) indicates the area geology of the site consists of the Paleozoic/Mesozoic Calaveras Complex (Pzcc). The Calaveras Complex lithologies consist of chert, argillite and slate.

Subsurface Conditions

According to the As-Built Log of Test Borings sheet (circa 1956), a foundation investigation was completed in 1955. The 1955 subsurface investigation consisted of a visual inspection of a road cut and three 2.25-inch diameter cone penetrometer tests borings extending to a maximum depth of approximately 56.0 feet. According to the As-Built LOTB (circa 1956) and the Foundation Recommendations Memorandum by C. Marek and T. L. Sommers (1955), the subsurface material consists of residual silty clay underlain by weathered clayey slate.

Groundwater

According to the As-Built Log of Test Borings sheet (circa 1956) and the Foundation Recommendations Memorandum by C. Marek and T. L. Sommers (1955), groundwater was not encountered at the site. Groundwater surface elevations are subject to seasonal fluctuations and may occur at higher or lower elevations depending on the conditions at time of construction.

Scour

There is no scour potential at the site, since the bridge does not span a watercourse.

Corrosion Evaluation

Laboratory testing to determine corrosion potential has not been performed at the site.

Seismic Recommendations

Based on the new Caltrans Seismic Design Criteria (SDC), the deterministic spectrum is obtained as the arithmetic average of median response spectra calculated using the Campbell-Bozorgnia (2008) and Chiou-Youngs (2008) ground motion prediction equations, and the probabilistic spectrum is obtained from the (2008) USGS Seismic Hazard Map (Petersen, 2008) for the 5% in 50 years probability of exceedance (or 975 year return period) with appropriate soil amplification factors.

In some cases where the aforementioned spectrum does not produce the minimum ground motion as defined by the Caltrans SDC, a statewide lowest spectral acceleration associated with a seismic source of a maximum moment magnitude MMax of 6.5 and a vertical strike-slip event at a distance of about 7.5 miles must be used for design purposes. It is possible that the design of a structure may be based on an envelope of spectral accelerations generated by two, or all three previously mentioned methods.

Based on the 2011 fault data, the controlling fault is the Foothills Fault System north central reach section (Highway 49 section) with a maximum moment magnitude, MMax of 6.5. This fault is characterized as normal with a dip of 90 degrees (vertical dip) and is located southwest of the bridge. The nearest distance to the fault rupture plane is measured to be about 9.6 miles.

Based on the As-Built Log of Test Borings dated December 1955, the estimated shear wave velocity (V_{s30}) is about 890 feet per second.

The attached Figure 1, design Acceleration Response Spectrum curve, is an envelope of spectral accelerations generated by the minimum criterion and the probabilistic spectrum. The Peak Ground Acceleration is estimated to be 0.23g.

The potential for surface rupture at the site due to fault movement is considered insignificant since there are no known faults projecting towards or passing directly through the project site; the liquefaction potential is considered to be insignificant.

As-Built Foundation Data

According to the As-Built Plans, the existing structure is supported on spread footings at all support locations. The bottom of footing elevations for the spread footings are 2980.0 feet at Bent 2, 2976.5 feet at Bent 3 and 2974.0 feet at Bent 4. The bottom of footing elevation for Abutment 1 left is 2996.2 feet and at Abutment 1 right is 2995.7 feet. The bottom of footing elevation at Abutment 5 left is 2994.8 feet and at Abutment 5 right is 2992.1 feet. A footing pressure of 4 tons per square foot (tsf) at or below elevation 2980.0 feet was shown on the As-Built Miscellaneous Details plan for all support locations. The exiting footing minimum widths are 4.5 feet for the bents and 4.3 feet for the abutments.

Foundation Recommendations

The load demands shown in Table 1 were included in the request for the FR dated February 15, 2012 and are for raising (one foot four inches) the existing Magra Overcrossing (Br. No. 19-0092).

Table 1. Load Demands provided for all support locations

Location	Design Method	Bottom of Footing Elevation (ft)	Minimum Width (inch)	Design Loading (tsf)
Abutment 1 Right	WSD	2999.2	51	2.2
Abutment Left	WSD	2998.7	51	2.2
Bent 2	WSD	2983.0	54	2.5
Bent 3	WSD	2979.5	54	2.5
Bent 4	WSD	2979.0	54	2.5
Abutment 5 Right	WSD	2997.8	51	2.2
Abutment 5 Left	WSD	2995.1	51	2.2

Note: The As-Built bottom of footing elevations have been changed to reflect the NAVD 88 datum per an email received from the Designer on 2/22/2012.

A Foundation Recommendations Memorandum by C. Marek and T. L. Sommers for the Magra Road Overcrossing (Br. No. 19-0092) dated December 18, 1955 was completed for the original construction of the overcrossing. This report recommended a design bearing pressure (allowable bearing pressure) of 4 tsf for all support locations. The loads provided above in Table 1 are less than the original recommendations and are considered adequate based on the As-Built LOTBs.

The Foundation and Seismic Recommendations included in this report are based on specific project information regarding structure type and structure location that has been provided by the Office of Bridge Design North, Design Branch 3. Any questions regarding the above recommendations should be directed to the attention of Jacqueline A Martin (916) 227-1051 or Reid Buell (916) 227-1012, Geotechnical Services, Office of Geotechnical Design-North, Branch A.

PROFESSIONAL GEOLOGIST
JACQUELINE A. MARTIN
No. 8705
Exp. 10/31/12
STATE OF CALIFORNIA

REGISTERED PROFESSIONAL ENGINEER
REZA MAHALLATI
No. 49374
Exp. 9/30/12
CIVIL
STATE OF CALIFORNIA

Jacqueline Martin
JACQUELINE A MARTIN
Engineering Geologist
Office of Geotechnical Design-North

Reza M
REZA MAHALLATI
Senior Materials & Research Engineer
Office of Geotechnical Design-North

Attachments: 1. Acceleration Response Spectrum (ARS)
2. Foundation Recommendations Memorandum by C. Marek and T. L. Sommers for the Magra Road Overcrossing (Br. No. 19-0092) dated December 18, 1955

cc: OGDN
GS File Room
Reid Buell
John Cosmez

REFERENCES

Harden, Deborah R., 1998, California Geology, Prentice Hall, 194-198pp.

Wagner, D.L., Jennings, C.W., Bedrossian, T.L., and Bortugno, E. J., 1981, Geologic Map of California the Sacramento Quadrangle, California, 1:250,000: California Division of Mines and Geology, Regional Geologic Map 1A.

Federal Highway Administration (FHWA), Shallow Foundations (Pub. No. FHWA-NHI-01-023) published June 2001.

Seismic Design Criteria (2011), California Department of Transportation.

Magra OC

Bridge No. 19-0092

EA No. 03-3E1000

Latitude 39.1471

Longitude -120.9077

Control **Envelope**

Period (s)	Sa(g)
0.010	0.226
0.020	0.256
0.030	0.293
0.050	0.329
0.075	0.366
0.100	0.403
0.120	0.439
0.150	0.481
0.200	0.512
0.250	0.501
0.300	0.490
0.400	0.447
0.500	0.405
0.750	0.361
1.000	0.304
1.500	0.235
2.000	0.168
3.000	0.101
4.000	0.068
5.000	0.055

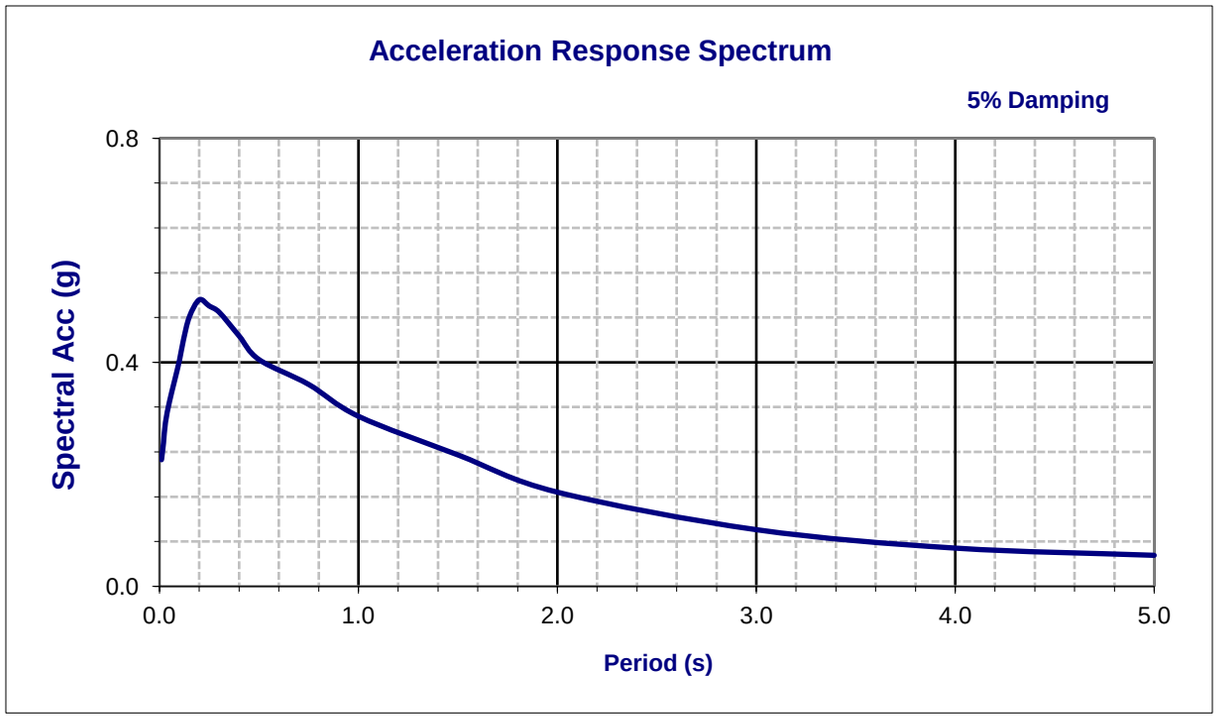

Deterministic Procedure Data

Fault	Foothills Fault System north central reach section (Highway 49 fault)		R_{rup}	16.3	km
Fault ID	93		R_{jb}	16.3	km
Style	N		R_x	15.4	km
Mmax	6.5		V_{S30}	270	m/s
Dip	90	deg	$Z_{1.0}$	N/A	m
Z_{TOR}	0	km	$Z_{2.5}$	N/A	km

Notes

Please note the Design ARS curve is an envelope of minimum and probabilitic spectrum.

Note the probabilistic method is based on the 5% probability of exceedane in 50 years (975 years return period).

Final

Design Response Spectrum

THIS COPY FOR

T L Sommers-2
FROM BRIDGE DEPARTMENT

Magra 00
III-Pla-37-C
19-92

December 28, 1955

Mr. C. R. Poppe:

A study of the foundation material was made at the above named structure site by the Bridge Department during December, 1955. The study consisted of three penetrometer tests and a visual inspection of an existing road cut at the site. Foundation data can be obtained from "Log of Test Borings", drawing #PR 4790-4.

GEOLOGY

The site consists of a residual silty clay deposit derived from the clayey slate that exists throughout the area. Below the soil mantle, whose lower horizon is about elevation 3010, a weathered clay slate was encountered to elevation 2975, the maximum boring depth attained. Adequate structure support can be obtained from this material.

Groundwater was not encountered at this site during December, 1955.

FOUNDATION RECOMMENDATIONS

It is recommended that the structure be supported by footing foundations. Recommended design load of 4-T.S.F. can be used at or below elevation 2980.

Report by

G. Marek

ORIGINAL SIGNED BY
T. L. SOMMERS

T. L. Sommers

CM ab
cc C R Poppe-2
T L Sommers-2
R E Fending-1

EST. 3339. 18733 6-55 25M SPO

M e m o r a n d u m

Flex your power!
Be energy efficient!

To: JOSEPH E. DOWNING
BRANCH CHIEF
Structure Design Branch 3
Office of Bridge Design North
Division of Engineering Services

Date: April 12, 2012

File: 03-PLA-80- PM 8.13
Brace Road OC
Br. No. 19-0096
EA 03-3E1000

ATTN: Ali Asnaashari

From: **DEPARTMENT OF TRANSPORTATION**
DIVISION OF ENGINEERING SERVICES
Geotechnical Services – MS 5
Office of Geotechnical Design – North

Subject: Foundation Report (FR) for the Brace Road Overcrossing

Introduction

Per your request dated February 15, 2012, the Office of Geotechnical Design-North (OGD-N), Branch A has prepared the Foundation Report (FR) for raising the Brace Road Overcrossing (Br. No. 19-0096) located on Interstate 80 at PM 8.13, in Placer County, California. The project proposes to raise six structures to meet vertical clearance requirements for permit vehicles along Interstate 80 between Roseville and the Nevada border.

Our Office has evaluated the site conditions and geology based on a review of the existing As-Built Plans, available geologic literature and geologic maps. A field investigation and laboratory testing was not performed for completion of the FR.

Please note that the elevations shown on the As-Built plans were used to complete this report. The Vertical Datum was not provided for the completion of this report.

The following Department of Transportation, Caltrans records and resources were used for the FR:

- General Plan for the Brace Road Overcrossing (Br. No. 19-0096) dated December 12, 2011.
- As-Built General Plan for the Brace Road Overcrossing (Br. No. 19-0096) circa 1958.
- As-Built Foundation Plan for the Brace Road Overcrossing (Br. No. 19-0096) circa 1958.
- As-Built Abutments Plan for the Brace Road Overcrossing (Br. No. 19-0096) circa 1958.
- As-Built Bents Plan for the Brace Road Overcrossing (Br. No. 19-0096) circa 1958.

- As-Built Log of Test Boring (LOTB) for the Brace Road Overcrossing (Br. No. 19-0096) dated January 6, 1958.
- Foundation Recommendations Memorandum by R. W. Reynolds and T. L. Sommers for the Brace Road Overcrossing (Br. No. 19-0096) dated February 13, 1957.
- Bridge Inspection Report by Anthony Fernandes for the Brace Road Overcrossing (Br. No. 19-0096) dated November 19, 2007.

Project Description

The current bridge was built in 1959. The structure was built as a continuous four span reinforced concrete (RC) box girder structure supported with RC three-column bents and RC open-end seat abutments. The bents are founded on spread footings and the abutments are founded on driven concrete piles (Raymond step-taper piles).

According to the General Plan, the existing columns will be cut and the bridge will be raised one foot and nine inches.

Summary of Site Geology and Subsurface Conditions

Regional Setting and Area Geology

The project site is located within the northern section of the Sierra Nevada geomorphic province. The Sierra Nevada geomorphic province is approximately 65 to 160 kilometers in width. It is bounded on the west by the Great Valley province and on the east by the Basin and Range province. Formation of the Sierra Nevada geomorphic province began approximately 50 million years ago with the uplift of the Sierra Nevada batholith. Tectonic activity along the Basin and Range fault system located to the east of the Sierra Nevada Range, resulted in the asymmetric, westward tilting of the Sierra Nevada. The geomorphology of the Sierra Nevada is generally the result of extensive weathering and erosion occurring during uplift.

The Geologic Map of the Sacramento Quadrangle, scale 1:250,000, compiled by D. L. Wagner, C. W. Jennings, T. L. Bedrossian, and E. J. Bortugno, 1981, California Geological Survey (formerly the Division of Mines and Geology) indicates the area geology of the site consists of Mesozoic plutonic rocks defined as dioritic rocks (Mzd), quartz diorite, diorite and trondhjemite.

Subsurface Conditions

According to the As-Built Log of Test Borings sheet (1958), a foundation investigation was completed in 1956. The 1956 subsurface investigation consisted of two 2.5-inch diameter rotary borings (wet) extending to a maximum depth of approximately 15.0 feet and three 1.0-inch diameter sampler borings (dry) extending to a maximum depth of approximately 7.0 feet. According to the As-Built LOTB (1958), the site is underlain by compact reddish brown to brown silty fine sand to coarse granitic sand and gravel with some quartz cobbles overlying very dense light gray decomposed granite.

According to the Foundation Recommendations Memorandum by R. W. Reynolds and T. L. Sommers for the Brace Road Overcrossing (Br. No. 19-0096) dated February 13, 1957, granite bedrock underlies the surface at very shallow depths throughout the site area. Overlying the bedrock is a very thin soil mantle consisting of weathered in place granite.

Groundwater

According to the As-Built Log of Test Borings sheet (1958) and the Foundation Recommendations Memorandum by R. W. Reynolds and T. L. Sommers (1957), groundwater was not encountered at the site. Groundwater surface elevations are subject to seasonal fluctuations and may occur at higher or lower elevations depending on the conditions at time of construction.

Scour Evaluation

There is no scour potential at the site, since the bridge does not span a watercourse.

Corrosion Evaluation

Laboratory testing to determine corrosion potential has not been performed at the site.

Seismic Recommendations

Based on the new Caltrans Seismic Design Criteria (SDC), the deterministic spectrum is obtained as the arithmetic average of median response spectra calculated using the Campbell-Bozorgnia (2008) and Chiou-Youngs (2008) ground motion prediction equations, and the probabilistic spectrum is obtained from the (2008) USGS Seismic Hazard Map (Petersen, 2008) for the 5% in 50 years probability of exceedance (or 975 year return period) with appropriate soil amplification factors.

In some cases where the aforementioned spectrum does not produce the minimum ground motion as defined by the Caltrans SDC, a statewide lowest spectral acceleration associated with a seismic source of a maximum moment magnitude MMax of 6.5 and a vertical strike-slip event at a distance of about 7.5 miles must be used for design purposes. The design of a structure may be based on an envelope of spectral accelerations generated by two, or all three previously mentioned methods.

Based on the 2011 fault data, the controlling fault is the Foothills Fault System north central reach section (Deadman fault, Fault ID#100) with a maximum moment magnitude, MMax of 6.5. This fault is characterized as normal with a dip of 90 degrees (vertical dip) and is located to the northeast of the bridge. The nearest distance to the fault rupture plane is measured to be about 8.1 miles.

Based on the As-Built Log of Test Borings dated December 1956, the estimated shear wave velocity (V_{s30}) is about 1840 feet per second.

The attached Figure 1, design Acceleration Response Spectrum (ARS) curve, is an envelope of the spectral accelerations generated by the minimum statewide criteria and the probabilistic approach. The Peak Ground Acceleration is about 0.21g.

The potential for surface rupture at the site due to fault movement is considered insignificant since there are no known faults projecting towards or passing directly through the project site; the liquefaction potential is considered to be insignificant.

As-Built Foundation Data

According to the As-Built Plans, the existing structure is supported on spread footings at the bent locations and driven concrete piles (Raymond step-taper piles) at the abutment locations. The bottom of footing elevations for the spread footings are 346.0 feet at Bent 2, 345.5 feet at Bent 3, and 346.5 feet at Bent 4. A footing pressure of 7 tons per square foot (tsf) was shown on the As-Built Foundation Plan for the footings at the bents. The exiting footing widths are 6.0 feet for the left and right footing and 8.0 feet for the center footing. Driven concrete piles (Raymond step-taper piles) with a design load of 45 tons were installed at the abutments. The average pile tip elevation at Abutment 1 is approximately 345 feet and the average pile tip elevation at Abutment 5 is approximately 353 feet. From the available information, it cannot be determined whether predrilling was used to install the driven concrete piles (Raymond Step-taper piles).

Foundation Recommendations

The load demands shown in Tables 1 and 2 were included in the request for the FR dated February 15, 2012 and are for raising (one foot and nine inches in height) the existing Brace Road Overcrossing (Br. No. 19-0096).

Table 1. Load Demands provided for Abutments 1 and 5 locations

Location	Working Stress Design Loading	
	Compression (tons)	Tension (tons)
Abutment 1	49	0
Abutment 5	49	0

Table 2. Load Demands provided for Piers 2, 3 and 4 locations

Location	Design Method	Bottom of Footing Elevation (ft)	Minimum Width (inch)	Design Loading (tsf)
Bent 2	WSD	346.0	72	3.6
Bent 3	WSD	345.5	72	3.8
Bent 4	WSD	346.5	72	3.6

Based on the As-Built LOTB, the driving of a concrete pile was logged at both Abutments 1 and 5; and the average pile tips were provided for all driven concrete piles. According to the driving records and average pile tips for these piles, the existing piles will support the small increase in the load provided above in Table 1. The Designer should determine whether the structural capacity of the pile is exceeded. A Foundation Recommendation Memorandum by R. W. Reynolds and T. L. Sommers for the Brace Road Overcrossing (Br. No. 19-0096) dated February 13, 1957 was completed for the original construction of the overcrossing. This report recommended a design bearing pressure (allowable bearing pressure) of 7 tsf for Bents 2, 3 and 4. The loads provided for Bents 2, 3, and 4 shown above in Table 2 are less than the original recommendations and are considered adequate based on the As-Built LOTB.

The Foundation and Seismic Recommendations included in this report are based on specific project information regarding structure type and structure location that has been provided by the Office of Bridge Design North, Design Branch 3. Any questions regarding the above recommendations should be directed to the attention of Jacqueline A Martin (916) 227-1051 or Reid Buell ~~(916) 227-1012~~, Geotechnical Services, Office of Geotechnical Design-North, Branch A.

PROFESSIONAL GEOLOGIST
JACQUELINE A. MARTIN
No. 8705
Exp. 10/31/12
STATE OF CALIFORNIA

Jacqueline A. Martin

JACQUELINE A MARTIN
Engineering Geologist
Office of Geotechnical Design-North

REGISTERED PROFESSIONAL ENGINEER
REZA MAHALLATI
No. 49374
Exp. 9/30/12
CIVIL
STATE OF CALIFORNIA

Reza M

REZA MAHALLATI
Senior Materials & Research Engineer
Office of Geotechnical Design-North

Attachments: 1. Acceleration Response Spectrum (ARS)
2. Foundation Recommendations Memorandum by R. W. Reynolds and T. L. Sommers for the Brace Road Overcrossing (Br. No. 19-0096) dated February 13, 1957

cc: OGDN
GS File Room
Reid Buell
John Cosmez

REFERENCES

Harden, Deborah R., 1998, California Geology, Prentice Hall, 194-198pp.

Wagner, D.L., Jennings, C.W., Bedrossian, T.L., and Bortugno, E. J., 1981, Geologic Map of California the Sacramento Quadrangle, California, 1:250,000: California Division of Mines and Geology, Regional Geologic Map 1A.

Federal Highway Administration (FHWA), Shallow Foundations (Pub. No. FHWA-NHI-01-023) published June 2001.

Seismic Design Criteria (2011), California Department of Transportation (Caltrans).

State of California, Department of Transportation (Caltrans):

- Bridge Standard Details Sheets, April 2000.
- Memo to Designers, Section 3-1, July 2008.
- Memo to Designers, Section 1-35, June 2008.

Brace Road OC

Bridge No. **19-0096**

EA No. **03-3E1000**

Latitude 38.8104

Longitude -121.1968

Control **Envelope**

Period (s)	Sa(g)
0.010	0.210
0.020	0.214
0.030	0.228
0.050	0.277
0.075	0.357
0.100	0.425
0.120	0.461
0.150	0.499
0.200	0.504
0.250	0.470
0.300	0.436
0.400	0.369
0.500	0.306
0.750	0.221
1.000	0.187
1.500	0.134
2.000	0.107
3.000	0.066
4.000	0.044
5.000	0.036

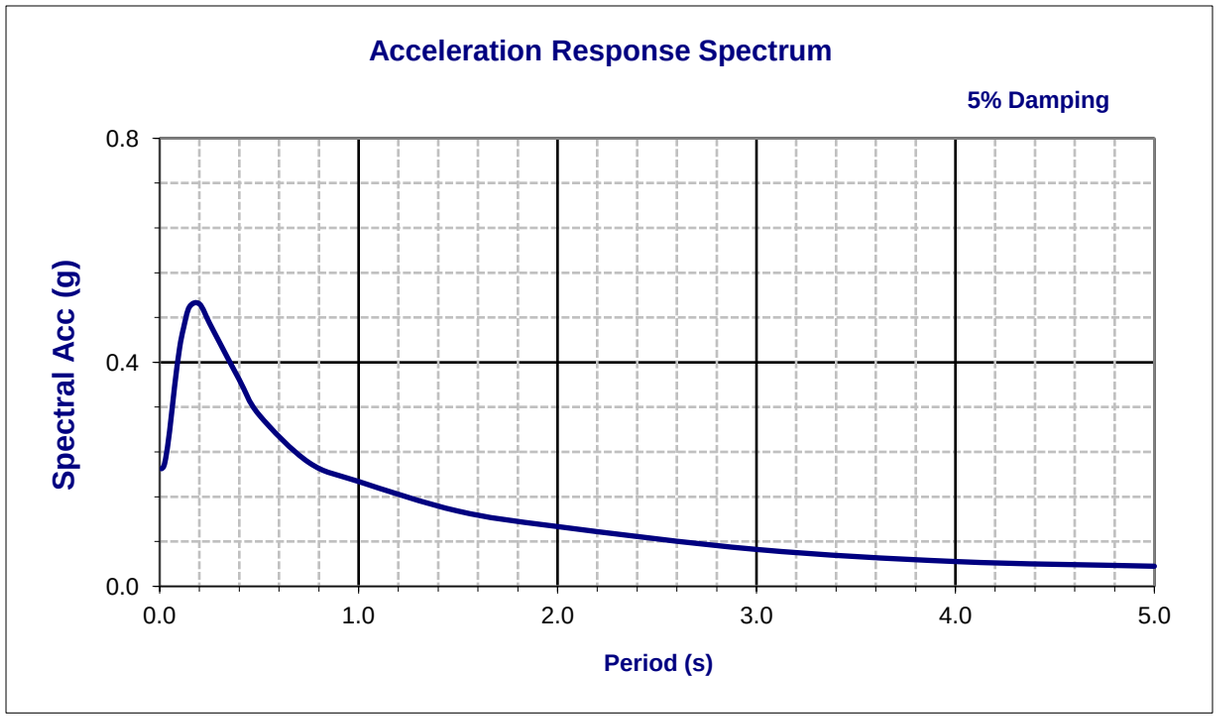

Deterministic Procedure Data

Fault	Foothills Fault System north central reach section (Deadman fault)		R_{rup}	13.0	km
Fault ID	100		R_{jb}	13.0	km
Style	N		R_x	13.0	km
Mmax	6.5		V_{S30}	560	m/s
Dip	90	deg	$Z_{1.0}$	N/A	m
Z_{TOR}	0	km	$Z_{2.5}$	N/A	km

Notes

Please note the Design ARS curve is based on the envelpoe of the minimum deterministic and probabilitic methods.

The probabilitic method is based on the USGS 5% probability of exceedance in 50 years (975 years return period).

Final

Design Response Spectrum

THIS COPY FOR
TLSommers
FROM BRIDGE DEPARTMENT

Brace
~~Parsons~~ Road Overcrossing
III-Pla-17-A
Br.#19-96

February 13, 1957

Mr. C. R. Poppe:

Foundation Data:

A foundation investigation study was conducted at the above named structure site during December 1956 by the Geology Section of the Bridge Department. The study consisted of two rotary sample borings and three 1" drive sample borings. See Log of Test Borings sheet: Drawing #PB-5026-4.

Geology

The structure site is located in an area characterized by gentle rolling hills and prominent granite outcrops. Granite bedrock underlies the surface at very shallow depth throughout the site area. Overlying the bedrock is a very thin soil mantle consisting of weathered in place granite.

No ground water was encountered at the site during the study.

Recommendations

Spread footings founded in shallow, partially weathered bedrock are recommended for all structure support. The footings at all supports may be designed for loads up to and including seven tons per square foot.

The following table illustrates the recommendations with regard to the proposed structure as shown on the "General Plan" Drawing #P-5026-1:

Abutment or Bent #	Recommended Footing Elevations		
	Lt.	C_L	Rt.
Abutment #1	346.0 or below	345.0 or below	344.0 or below
Bent #2	347.0 "	347.0 "	346.0 "
Bent #3	348.0 "	348.0 "	348.0 "
Bent #4	352.0 "	352.0 "	352.0 "
Abutment #5	352.0 "	352.0 "	352.0 "

EST. 5553. 37869 6-56 25M SPO

Driven concrete or pipe piles may be used at the abutments as an alternate to footings, but it should be pointed out that little penetration will be obtained. The piles are estimated to penetrate to a maximum depth of ± seven feet below the existing ground line. The piles will have excellent end bearing and the twelve foot minimum penetration requirement could therefore be waived.

Also, if piles are chosen at the abutments, they should be driven through holes made through the fills to approximately the original ground line. The holes should have a minimum diameter of six inches larger than the butt diameter of the piles.

Report by

R. W. Reynolds

T. L. Sommers

ORIGINAL SIGNED BY
T. L. SOMMERS

Attch
RWR lr
cc CRPoppe(2)
TLSommers(2)
RLPending

M e m o r a n d u m

Flex your power!
Be energy efficient!

To: JOSEPH E. DOWNING
BRANCH CHIEF
Structure Design Branch 3
Office of Bridge Design North
Division of Engineering Services

Date: April 12, 2012

File: 03-PLA-80- PM 8.72
Horseshoe Bar OC
Br. No. 19-0097
EA 03-3E1000

ATTN: Ali Asnaashari

From: **DEPARTMENT OF TRANSPORTATION**
DIVISION OF ENGINEERING SERVICES
Geotechnical Services – MS 5
Office of Geotechnical Design – North

Subject: Foundation Report (FR) for Horseshoe Bar Overcrossing

Introduction

Per your request dated February 15, 2012, the Office of Geotechnical Design-North (OGD-N), Branch A has prepared the Foundation Report (FR) for raising the Horseshoe Bar Overcrossing (Br. No. 19-0097) located on Interstate 80 at PM 8.72, in Placer County, California. The project proposes to raise six structures to meet vertical clearance requirements for permit vehicles along Interstate 80 between Roseville and the Nevada border.

Our Office has evaluated the site conditions and geology based on a review of the existing As-Built Plans, available geologic literature and geologic maps. A field investigation and laboratory testing was not performed for the completion of the FR.

Please note that the elevations shown on the As-Built plans were used to complete this report. The Vertical Datum was not provided for the completion of this report.

The following Department of Transportation, Caltrans records and resources were used for the FR:

- General Plan for the Horseshoe Bar Overcrossing (Br. No. 19-0097) dated April 27, 2011.
- As-Built General Plan for the Nixon Loomis (Horseshoe Bar) Overcrossing (Br. No. 19-0097) circa 1958.
- As-Built Foundation and Site Plan for the Nixon Loomis (Horseshoe Bar) Overcrossing (Br. No. 19-0097) circa 1958.
- As-Built Log of Test Boring (LOTB) for the Nixon Loomis (Horseshoe Bar) Overcrossing (Br. No. 19-0097) circa 1958.
- As-Built Abutments Plan for the Nixon Loomis (Horseshoe Bar) Overcrossing (Br. No. 19-0096) circa 1958.

- As-Built Bents Plan for the Nixon Loomis (Horseshoe Bar) Overcrossing (Br. No. 19-0096) circa 1958.
- Foundation Recommendations Memorandum by R. W. Reynolds and T. L. Sommers for the Nixon Loomis (Horseshoe Bar) Overcrossing (Br. No. 19-0097) dated February 1, 1957.
- Bridge Inspection Report by Anthony Fernandes for the Nixon Loomis (Horseshoe Bar) Overcrossing (Br. No. 19-0097) dated November 19, 2007.

Project Description

The current bridge was built in 1959. The structure was built as a continuous four span reinforced concrete (RC) box girder structure supported with RC two-column bents and RC open-end seat abutments. The bents are founded on spread footings and the abutments are founded on Cast-In-Drilled-Hole (CIDH) concrete piles.

According to the General Plan, the existing columns will be cut and the bridge will be raised one foot and six inches.

Summary of Site Geology and Subsurface Conditions

Regional Setting and Area Geology

The project site is located within the northern section of the Sierra Nevada geomorphic province. The Sierra Nevada geomorphic province is approximately 65 to 160 kilometers in width. It is bounded on the west by the Great Valley province and on the east by the Basin and Range province. Formation of the Sierra Nevada geomorphic province began approximately 50 million years ago with the uplift of the Sierra Nevada batholith. Tectonic activity along the Basin and Range fault system located to the east of the Sierra Nevada Range, resulted in the asymmetric, westward tilting of the Sierra Nevada. The geomorphology of the Sierra Nevada is generally the result of extensive weathering and erosion occurring during uplift.

The Geologic Map of the Sacramento Quadrangle, scale 1:250,000, compiled by D. L. Wagner, C. W. Jennings, T. L. Bedrossian, and E. J. Bortugno, 1981, California Geological Survey (formerly the Division of Mines and Geology) indicates the area geology of the site consists of Mesozoic plutonic rocks defined as dioritic rocks (Mzd), quartz diorite, diorite and trondhjemite.

Subsurface Conditions

According to the As-Built Log of Test Borings sheet (circa 1958), a foundation investigation was completed in 1957. The 1957 subsurface investigation consisted of three 1.0-inch diameter sampler borings (dry) extending to a maximum depth of approximately 12.0 feet. According to the As-Built LOTB (circa 1958), the site is underlain by silty fine sand to coarse granitic sand overlying decomposed and weathered granite.

According to the Foundation Recommendations Memorandum by R. W. Reynolds and T. L. Sommers for the Nixon Loomis (Horseshoe Bar) Overcrossing (Br. No. 19-0097) dated February 1, 1957, granite bedrock underlies the surface at very shallow depths throughout the site area. Overlying the bedrock is a very thin soil mantle consisting of weathered in place granite.

Groundwater

According to the As-Built Log of Test Borings sheet (circa 1958) and the Foundation Recommendations Memorandum by R. W. Reynolds and T. L. Sommers (1957), groundwater was not encountered at the site. Groundwater surface elevations are subject to seasonal fluctuations and may occur at higher or lower elevations depending on the conditions at time of construction.

Scour Evaluation

There is no scour potential at the site, since the bridge does not span a watercourse.

Corrosion Evaluation

Laboratory testing to determine corrosion potential has not been performed at the site.

Seismic Recommendations

Based on the new Caltrans Seismic Design Criteria (SDC), the deterministic spectrum is obtained as the arithmetic average of median response spectra calculated using the Campbell-Bozorgnia (2008) and Chiou-Youngs (2008) ground motion prediction equations, and the probabilistic spectrum is obtained from the (2008) USGS Seismic Hazard Map (Petersen, 2008) for the 5% in 50 years probability of exceedance (or 975 year return period) with appropriate soil amplification factors for non-rock condition.

In some cases where the aforementioned spectrum does not produce the minimum ground motion as defined by Caltrans SDC, a statewide lowest spectral acceleration associated with a seismic source of a maximum moment magnitude MMax of 6.5 and a vertical strike-slip event at a distance of about 7.5 miles must be used for design purposes. The design of a structure may be based on an envelope of spectral accelerations generated by two, or all three previously mentioned methods.

Based on the 2011 fault data, the controlling fault is the Fault System north central reach section (Deadman fault, Fault ID#100) with a maximum moment magnitude, MMax of 6.5. This fault is characterized as normal with a dip of 90 degrees (vertical dip) and is located to the northeast of the bridge. The nearest distance to the fault rupture plane is measured to be about 8.1 miles.

Based on the As-Built Log of Test Borings dated January 1957, the estimated shear wave velocity (V_{s30}) is about 1840 feet per second.

The attached Figure 1, design Acceleration Response Spectrum (ARS) curve, is an envelope of the spectral accelerations associated with the minimum statewide criteria and the probabilistic approach. The Peak Ground Acceleration is about 0.21g.

The potential for surface rupture at the site due to fault movement is considered insignificant since there are no known faults projecting towards or passing directly through the project site; and the liquefaction potential is considered to be insignificant.

As-Built Foundation Data

According to the As-Built Plans, the existing structure is supported on spread footings at the bent locations and CIDH concrete piles at the abutment locations. The bottom of footing elevations for the spread footings is 358.0 feet at Bent 2 and 3, and 355.0 feet at Bent 4. A footing pressure of 5 tons per square foot (tsf) was shown on the As-Built Foundation and Site Plan for the footings at the bents. The exiting footing widths are 8.0 feet. CIDH concrete piles with a design load of 45 tons were installed at the abutments. The average pile tip elevation at Abutment 1 is 355.0 feet and the average pile tip elevation at Abutment 5 is 351.7 feet.

Foundation Recommendations

The load demands shown in Tables 1 and 2 were included in the request for the FR dated February 15, 2012 and are for raising (one foot and six inches in height) the existing Horseshoe Bar Overcrossing (Br. No. 19-0097).

Table 1. Load Demands provided for Abutments 1 and 5 locations

Location	Working Stress Design Loading	
	Compression (tons)	Tension (tons)
Abutment 1	49.5	0
Abutment 5	49.5	0

Table 2. Load Demands provided for Piers 2, 3 and 4 locations

Location	Design Method	Bottom of Footing Elevation (ft)	Minimum Width (inch)	Design Loading (tsf)
Bent 2	WSD	358.0	96	3.5
Bent 3	WSD	358.0	96	3.9
Bent 4	WSD	355.0	96	3.6

Based on the As-Built LOTB, the average pile tip elevations were provided for Abutment 1 and 5. According to the average pile tip elevations for these piles and the granitic bedrock encountered at elevation 359 and below; the existing piles will support the small increase in the load at Abutments 1 and 5 provided above in Table 1. The Designer should determine whether the structural capacity of the pile is exceeded. A Foundation Recommendations Memorandum

by R. W. Reynolds and T. L. Sommers for the Nixon Loomis (Horseshoe Bar) Overcrossing (Br. No. 19-0097) dated February 1, 1957 was completed for the original construction of the overcrossing This report recommended a design bearing pressure (allowable bearing pressure) of 5 tsf for Bents 2, 3 and 4. The loads provided for Bents 2, 3, and 4 shown above in Table 2 are less than the original recommendations and are considered adequate based on the As-Built LOTB.

The Foundation and Seismic Recommendations included in this report are based on specific project information regarding structure type and structure location that has been provided by the Office of Bridge Design North, Design Branch 3. Any questions regarding the above recommendations should be directed to the attention of Jacqueline A Martin (916) 227-1051 or Reid Buell (916) 227-1012, Geotechnical Services, Office of Geotechnical Design-North, Branch

PROFESSIONAL GEOLOGIST
JACQUELINE A. MARTIN
No. 8705
Exp. 10/31/12
STATE OF CALIFORNIA

REGISTERED PROFESSIONAL ENGINEER
REZA MAHALLATI
No. 49374
Exp. 9/30/12
CIVIL
STATE OF CALIFORNIA

Jacqueline A. Martin

JACQUELINE A MARTIN
Engineering Geologist
Office of Geotechnical Design-North

Reza M

REZA MAHALLATI
Senior Materials & Research Engineer
Office of Geotechnical Design-North

Attachments: 1. Acceleration Response Spectrum (ARS)
2. Foundation Recommendations Memorandum by R. W. Reynolds and T. L. Sommers for the Nixon Loomis (Horseshoe Bar) Overcrossing (Br. No. 19-0097) dated February 1, 1957

cc: OGDN
GS File Room
Reid Buell
John Cosmez

REFERENCES

Harden, Deborah R., 1998, California Geology, Prentice Hall, 194-198pp.

Wagner, D.L., Jennings, C.W., Bedrossian, T.L., and Bortugno, E. J., 1981, Geologic Map of California the Sacramento Quadrangle, California, 1:250,000: California Division of Mines and Geology, Regional Geologic Map 1A.

Federal Highway Administration (FHWA), Shallow Foundations (Pub. No. FHWA-NHI-01-023) published June 2001.

Seismic Design Criteria (2011), California Department of Transportation.

State of California, Department of Transportation (Caltrans):

- Bridge Standard Details Sheets, April 2000.
- Memo to Designers, Section 3-1, July 2008.
- Memo to Designers, Section 1-35, June 2008.

Horseshoe Bar OC

Bridge No. **19-0097**

EA No. **03-3E1000**

Latitude 38.8167

Longitude -121.1889

Control **Envelope**

Period (s)	Sa(g)
0.010	0.210
0.020	0.214
0.030	0.228
0.050	0.277
0.075	0.357
0.100	0.425
0.120	0.461
0.150	0.499
0.200	0.504
0.250	0.470
0.300	0.436
0.400	0.369
0.500	0.306
0.750	0.221
1.000	0.186
1.500	0.134
2.000	0.106
3.000	0.066
4.000	0.044
5.000	0.036

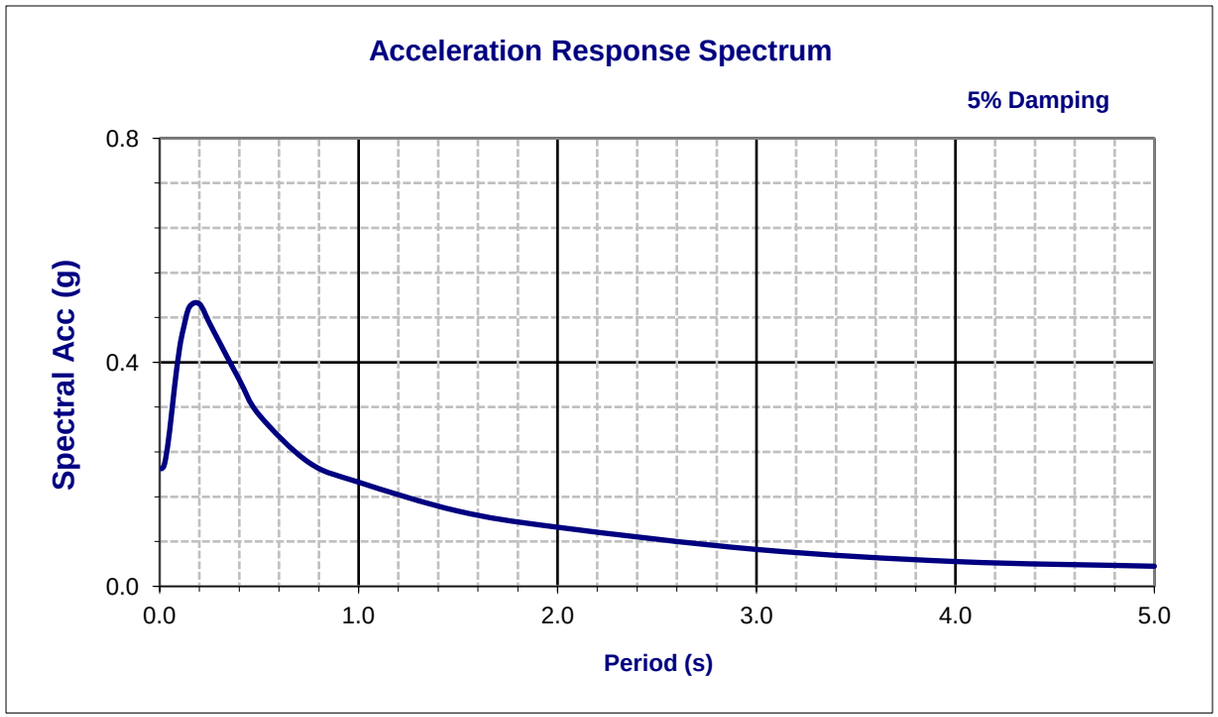

Deterministic Procedure Data

Fault	Foothills Fault System north central reach section (Deadman fault)		R_{rup}	12.0	km
Fault ID	100		R_{jb}	12.0	km
Style	N		R_x	12.0	km
Mmax	6.5		V_{S30}	560	m/s
Dip	90	deg	$Z_{1.0}$	N/A	m
Z_{TOR}	0	km	$Z_{2.5}$	N/A	km

Notes

Please note the Design ARS curve is based on the envelpoe of the minimum deterministic and probabilitic methods.

The probabilitic method is based on the USGS 5% probability of exceedance in 50 years (975 years return period).

Final

Design Response Spectrum

THIS COPY FOR
TLSommers (2)
FROM BRIDGE DEPARTMENT

Mixon Lounds Road Overcrossing
III-Pla-17-A
Br. No. 19-97

February 1, 1957

Mr. G. R. Poppe:

FOUNDATION STUDY

A foundation investigation study was conducted at the above named structure site during January 1957 by the Geology Section of the Bridge Department. The study consisted of three 1" drive sample borings. See Log of Test Borings sheet: Drawing No. PR-5027-4.

GEOLOGY

The structure site is located in an area characterized by very gentle rolling hills, the surface of which is underlain at very shallow depth by partially weathered granite bedrock. The fairly thin soil mantle overlying the bedrock at the site consists of weathered in place granite.

No ground water was encountered at the site during the study.

RECOMMENDATIONS

Spread footings founded in partially weathered granite bedrock are recommended for all structure support. The footings may be designed for loads up to and including five tons per square foot.

An alternate of concrete or pipe piles may be used at Abutment No. 1 and Abutment No. 5. The piles may be designed for loads of 45 tons per pile. It should be noted, however, that the piles will attain bearing prior to the twelve foot minimum penetration requirement. It is recommended that the minimum penetration requirement be waived as the piles will have very good end bearing conditions at both abutment locations.

The following table illustrates the recommendations with regard to the proposed structure as shown on the "General Plan" Drawing No. P-5027-1.

EST. 5583. 37869 6-56 25M SPO

Abutment or Bent No.	Recommended Footing Elevation		Estimated Pile Tip Penetration *
Abutment #1	Elev. 358.0 or below	or	Elev. 356.0
Bent #2	Elev. 358.0 or below		
Bent #3	Elev. 358.0 or below		
Bent #4	Elev. 355.0 or below		
Abutment #5	Elev. 355.0 or below	or	Elev. 352.0

* Specified tip elevations for the cast-in-drill hole type pile alternate.

Report by R. W. Reynolds

R. W. Reynolds

T. L. Sommers

RWR dr
cc CRPoppe (2)
TLSommers (2)
RE Pending File (1)

M e m o r a n d u m

Flex your power!
Be energy efficient!

To: JOSEPH E. DOWNING
BRANCH CHIEF
Structure Design Branch 3
Office of Bridge Design North
Division of Engineering Services

Date: April 12, 2012

File: 03-PLA-80- PM 9.53
King Road OC
Br. No. 19-0098
EA 03-3E1000

ATTN: Ali Asnaashari

From: **DEPARTMENT OF TRANSPORTATION**
DIVISION OF ENGINEERING SERVICES
Geotechnical Services – MS 5
Office of Geotechnical Design – North

Subject: Foundation Report (FR) for King Road Overcrossing

Introduction

Per your request dated February 15, 2012, the Office of Geotechnical Design-North (OGD-N), Branch A has prepared the Foundation Report (FR) for raising the King Road Overcrossing (Br. No. 19-0098) located on Interstate 80 at PM 9.53, in Placer County, California. The project proposes to raise six structures to meet vertical clearance requirements for permit vehicles along Interstate 80 between Roseville and the Nevada border.

Our Office has evaluated the site conditions and geology based on a review of the existing As-Built Plans, available geologic literature and geologic maps. A field investigation and laboratory testing was not performed for completion of the FR.

Please note that the elevations shown on the As-Built plans were used to complete this report. The Vertical Datum was not provided for the completion of this report.

The following Department of Transportation, Caltrans records and resources were used for the FR:

- General Plan for the King Road Overcrossing (Br. No. 19-0098) dated December 28, 2011.
- As-Built General Plan for the King Road Overcrossing (Br. No. 19-0098) circa 1958.
- As-Built Foundation for the King Road Overcrossing (Br. No. 19-0098) circa 1958.
- As-Built Log of Test Boring (LOTB) for the King Road Overcrossing (Br. No. 19-0098) circa 1958.
- As-Built Abutments Plan for the King Road Overcrossing (Br. No. 19-0098) circa 1958.
- As-Built Bents Plan for the King Road Overcrossing (Br. No. 19-0098) circa 1958.

- Foundation Recommendations Memorandum by R. W. Reynolds and T. L. Sommers for the King Road Overcrossing (Br. No. 19-0098) dated January 17, 1957.
- Bridge Inspection Report by Anthony Fernandes for the King Road Overcrossing (Br. No. 19-0098) dated November 19, 2007.

Project Description

The current bridge was built in 1959. The structure was built as a continuous four span reinforced concrete (RC) box girder structure supported with RC three-column bents and RC open-end seat abutments. According to the As-Built General Plan circa 1958, Abutment 1 and the bents are founded on spread footings and Abutment 5 is founded on driven concrete piles (Raymond Step-taper piles).

According to the General Plan, the existing columns will be cut and the bridge will be raised one foot and 5 ¼ inches.

Summary of Site Geology and Subsurface Conditions

Regional Setting and Area Geology

The project site is located within the northern section of the Sierra Nevada geomorphic province. The Sierra Nevada geomorphic province is approximately 65 to 160 kilometers in width. It is bounded on the west by the Great Valley province and on the east by the Basin and Range province. Formation of the Sierra Nevada geomorphic province began approximately 50 million years ago with the uplift of the Sierra Nevada batholith. Tectonic activity along the Basin and Range fault system located to the east of the Sierra Nevada Range, resulted in the asymmetric, westward tilting of the Sierra Nevada. The geomorphology of the Sierra Nevada is generally the result of extensive weathering and erosion occurring during uplift.

The Geologic Map of the Sacramento Quadrangle, scale 1:250,000, compiled by D. L. Wagner, C. W. Jennings, T. L. Bedrossian, and E. J. Bortugno, 1981, California Geological Survey (formerly the Division of Mines and Geology) indicates the area geology of the site consists of Mesozoic plutonic rocks defined as dioritic rocks (Mzd), quartz diorite, diorite and trondhjemite.

Subsurface Conditions

According to the As-Built Log of Test Borings sheet (circa 1958), a foundation investigation was completed in 1956. The 1956 subsurface investigation consisted of three 2.5-inch diameter rotary borings (wet) extending to a maximum depth of approximately 25.0 feet and three 1.0-inch diameter sampler borings (dry) extending to a maximum depth of approximately 10.0 feet. According to the As-Built LOTB (circa 1958), the site is underlain by very loose and loose dark brown silty fine to coarse granitic sand and tan to brown micaceous silt and silty sand overlying very dense light brown and tan decomposed or weathered granite.

According to the Foundation Recommendations Memorandum by R. W. Reynolds and T. L. Sommers for the Nixon Loomis (Horseshoe Bar) Overcrossing (Br. No. 19-0097) dated January

17, 1957, weathered Jurassic granite bedrock underlies the entire structure site. Overlying the bedrock is a very thin soil mantle consisting of weathered in place granite bedrock.

Groundwater

According to the As-Built Log of Test Borings sheet (circa 1958) and the Foundation Recommendations Memorandum by R. W. Reynolds and T. L. Sommers (1957), groundwater was not encountered at the site. Groundwater surface elevations are subject to seasonal fluctuations and may occur at higher or lower elevations depending on the conditions at time of construction.

Scour Evaluation

There is no scour potential at the site, since the bridge does not span a watercourse.

Corrosion Evaluation

Laboratory testing to determine corrosion potential has not been performed at the site.

Seismic Recommendations

Based on the new Caltrans Seismic Design Criteria (SDC), the deterministic spectrum is obtained as the arithmetic average of median response spectra calculated using the Campbell-Bozorgnia (2008) and Chiou-Youngs (2008) ground motion prediction equations, and the probabilistic spectrum is obtained from the (2008) USGS Seismic Hazard Map (Petersen, 2008) for the 5% in 50 years probability of exceedance (or 975 year return period) with appropriate soil amplification factors.

In some cases where the aforementioned spectrum does not produce the minimum ground motion as defined by the Caltrans SDC, a statewide lowest spectral acceleration associated with a seismic source of a maximum moment magnitude MMax of 6.5 and a vertical strike-slip event at a distance of about 7.5 miles must be used for design purposes. The design of a structure may be based on an envelope of spectral accelerations generated by two, or all three previously mentioned methods.

Based on the 2011 fault data, the controlling fault is the Foothills Fault System north central reach section (Deadman fault, Fault ID#100) with a maximum moment magnitude, MMax of 6.5. This fault is characterized as normal with a dip of 90 degrees (vertical dip) and is located to the northeast of the bridge. The nearest distance to the fault rupture plane is measured to be about 6.7 miles.

Based on the As-Built Log of Test Borings dated December 1956, the estimated shear wave velocity (V_{s30}) is about 1840 feet per second

The attached Figure 1, design Acceleration Response Spectrum (ARS) curve, is an envelope of the three methodologies as described above. The Peak Ground Acceleration is about 0.21g.

The potential for surface rupture at the site due to fault movement is considered insignificant since there are no known faults projecting towards or passing directly through the project site; the liquefaction potential is considered to be insignificant.

As-Built Foundation Data

According to the As-Built Plans, the existing structure is supported on spread footings at Abutment 1 and the Bent 2, 3 and 4 locations, and driven concrete piles (Raymond Step-taper piles) at the Abutment 5 location. The bottom of footing elevations for the spread footings is 390.0 feet Abutment 1, 381.5 feet at Bent 2, 380.5 feet at Bent 3, and 381.0 feet at Bent 4. A footing pressure of 7 tons per square foot (tsf) was shown on the As-Built Foundation Plan for the footings at Abutment 1 and the bents. The existing footing widths at the Abutment 1 location are 5.0 feet. The exiting footing widths at the bents are 6.0 feet for the left and right footing and 8.0 feet for the center footing. Driven concrete piles (Raymond Step-taper piles) with a design load of 45 tons were installed at the Abutment 1 wingwall and Abutment 5 location. The average pile tip elevation at the Abutment 1 wingwall location is 390 feet and the average pile tip elevation at Abutment 5 is 382 feet.

Foundation Recommendations

The load demands shown in Tables 1 and 2 were included in the request for the FR dated February 15, 2012 and are for raising (one foot and 5 ¼ inches in height) the existing King Road Overcrossing (Br. No. 19-0098).

Table 1. Load Demands provided for Abutment 5 location

Location	Working Stress Design Loading	
	Compression (tons)	Tension (tons)
Abutment 5	49	0

Table 2. Load Demands provided for Abutment 1 and Piers 2, 3 and 4 locations

Location	Design Method	Bottom of Footing Elevation (ft)	Minimum Width (inch)	Design Loading (tsf)
Abutment 1	WSD	390.0	60	3.0
Bent 2	WSD	381.5	72	3.6
Bent 3	WSD	380.5	72	3.8
Bent 4	WSD	381.0	72	3.6

Based on the As-Built LOTB, the driving of a concrete pile (Raymond Step-taper) was logged at Abutment 5; and the average pile tips were provided for all driven concrete piles (Raymond Step-taper). According to the driving records and average pile tips for these piles, the existing piles will support the small increase in the load provided above in Table 1. The Designer should determine whether the structural capacity of the pile is exceeded. A Foundation

Recommendations Memorandum by R. W. Reynolds and T. L. Sommers for the King Road Overcrossing (Br. No. 19-0098) dated January 17, 1957 was completed for the original construction of the overcrossing. This report recommended a design bearing pressure (allowable bearing pressure) of 7 tsf for Abutment 1 and Bents 2, 3 and 4. The loads provided for Abutment 1 and Bents 2, 3, and 4 shown above in Table 2 are less than the original recommendations and are considered adequate based on the As-Built LOTB.

The Foundation and Seismic Recommendations included in this report are based on specific project information regarding structure type and structure location that has been provided by the Office of Bridge Design North, Design Branch 3. Any questions regarding the above recommendations should be directed to the attention of Jacqueline A Martin (916) 227-1051 or Reid Buell (916) 227-1012, Geotechnical Services, Office of Geotechnical Design-North, Branch A.

PROFESSIONAL GEOLOGIST
JACQUELINE A. MARTIN
No. 8705
Exp. 10/31/12
STATE OF CALIFORNIA

Jacqueline A. Martin

JACQUELINE A MARTIN
Engineering Geologist
Office of Geotechnical Design-North

REGISTERED PROFESSIONAL ENGINEER
REZA MAHALLATI
No. 49374
Exp. 9/30/12
CIVIL
STATE OF CALIFORNIA

Reza M

REZA MAHALLATI
Senior Materials & Research Engineer
Office of Geotechnical Design-North

Attachments: 1. Acceleration Response Spectrum (ARS)
2. Foundation Recommendations Memorandum by R. W. Reynolds and T. L. Sommers for the King Road Overcrossing (Br. No. 19-0098) dated January 17, 1957

cc: OGDN
GS File Room
Reid Buell
John Cosmez

REFERENCES

Harden, Deborah R., 1998, California Geology, Prentice Hall, 194-198pp.

Wagner, D.L., Jennings, C.W., Bedrossian, T.L., and Bortugno, E. J., 1981, Geologic Map of California the Sacramento Quadrangle, California, 1:250,000: California Division of Mines and Geology, Regional Geologic Map 1A.

Federal Highway Administration (FHWA), Shallow Foundations (Pub. No. FHWA-NHI-01-023) published June 2001.

Seismic Design Criteria (2011), California Department of Transportation.

State of California, Department of Transportation (Caltrans):

- Bridge Standard Details Sheets, April 2000.
- Memo to Designers, Section 3-1, July 2008.
- Memo to Designers, Section 1-35, June 2008.

King Road OC

Bridge No. **19-0098**

EA No. **03-3E1000**

Latitude 38.8252

Longitude -121.1792

Control **Envelope**

Period (s)	Sa(g)
0.010	0.210
0.020	0.214
0.030	0.228
0.050	0.277
0.075	0.357
0.100	0.425
0.120	0.461
0.150	0.499
0.200	0.504
0.250	0.470
0.300	0.436
0.400	0.369
0.500	0.308
0.750	0.224
1.000	0.186
1.500	0.133
2.000	0.106
3.000	0.066
4.000	0.044
5.000	0.036

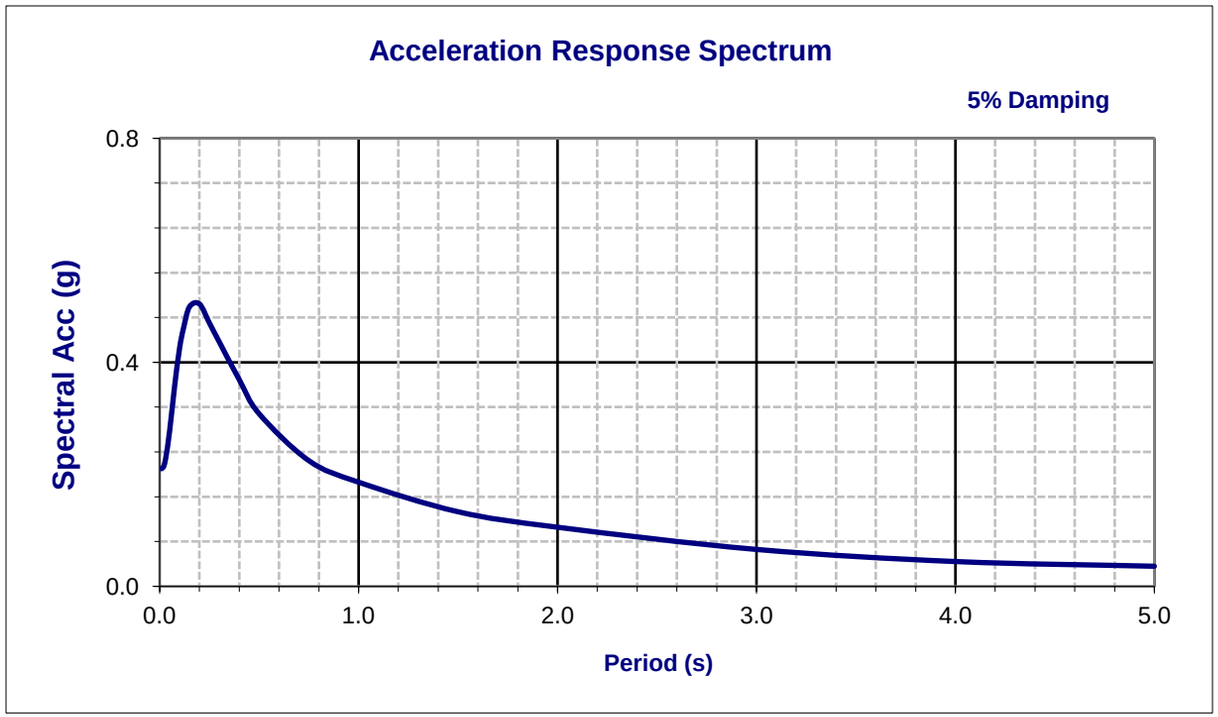

Deterministic Procedure Data

Fault	Foothills Fault System north central reach section (Deadman fault)		R_{rup}	10.7	km
Fault ID	100		R_{jb}	10.7	km
Style	N		R_x	10.7	km
Mmax	6.5		V_{S30}	560	m/s
Dip	90	deg	$Z_{1.0}$	N/A	m
Z_{TOR}	0	km	$Z_{2.5}$	N/A	km

Notes

Please note the Design ARS curve is based on the deterministic and probabilistic method.

The probabilistic method is based on the USGS 5% probability of exeedance in 50 years (975 year return period).

Final

Design Response Spectrum

THIS COPY FOR
T. L. Sommers
FROM BRIDGE DEPARTMENT

King [redacted] Road Overcrossing
III-Fla-17-A
Br. #19-98

January 17, 1957

Mr. C. R. Poppe:

Foundation Data:

A foundation investigation study was conducted at the above named structure site during December 1956 by the Geology Section of the Bridge Department. The study consisted of three rotary sample borings and three 1" drive sample borings. See Log of Test Borings sheet: Drawing #PR-5028-3.

Geology

Weathered Jurassic granite bedrock underlies the entire structure site. The very thin soil mantle overlying the bedrock consists of weatheredin place granite bedrock.

No ground water was encountered during the study.

Recommendations

Shallow spread footings founded in weathered granite bedrock are recommended for all structure support. The footings may be designed for loads up to and including seven tons per square foot.

The following table illustrates the recommendations with regard to the proposed structure as shown on the "General Plan" Drawing #P-5028-1.

Abutment or Bent #	Recommended Footing Elevation
Abutment #1	390.0 or below
Bent #2	382.0 " "
Bent #3	382.0 " "
Bent #4	382.0 " "
Abutment #5	382.0 " "

Report by

R. W. Reynolds

cc CRPoppe(2)
TLSommers(2)
NSPending File

T. L. Sommers

ORIGINAL SIGNED BY
T. L. SOMMERS

RWR bs
Attch

EST. 5553. 37869 6-56 25M SPO

M e m o r a n d u m

Flex your power!
Be energy efficient!

To: JOSEPH E. DOWNING
BRANCH CHIEF
Structure Design Branch 3
Office of Bridge Design North
Division of Engineering Services

Date: April 12, 2012

File: 03-PLA-80- PM 10.35
Penryn Road OC
Br. No. 19-0099
EA 03-3E1000

ATTN: Ali Asnaashari

From: **DEPARTMENT OF TRANSPORTATION**
DIVISION OF ENGINEERING SERVICES
Geotechnical Services – MS 5
Office of Geotechnical Design – North

Subject: Foundation Report (FR) for the Penryn Road Overcrossing

Introduction

Per your request dated February 15, 2012, the Office of Geotechnical Design-North (OGD-N), Branch A has prepared the Foundation Report (FR) for raising the Penryn Road Overcrossing (Br. No. 19-0099) located on Interstate 80 at PM 10.35, in Placer County, California. The project proposes to raise six structures to meet vertical clearance requirements for permit vehicles along Interstate 80 between Roseville and the Nevada border.

Our Office has evaluated the site conditions and geology based on a review of the existing As-Built Plans, available geologic literature and geologic maps. A field investigation and laboratory testing was not performed for the completion of the FR.

Please note that the elevations shown on the As-Built plans were used to complete this report. The Vertical Datum was not provided for the completion of this report.

The following Department of Transportation, Caltrans records and resources were used for the FR:

- General Plan for the Penryn Road Overcrossing (Br. No. 19-0099) dated December 7, 2011.
- As-Built General Plan for the Penryn Road Overcrossing (Br. No. 19-0099) circa 1958.
- As-Built Foundation Plan for the Penryn Road Overcrossing (Br. No. 19-0099) circa 1958.
- As-Built Log of Test Boring (LOTB) for the Penryn Road Overcrossing (Br. No. 19-0099) circa 1958.
- As-Built Abutments Plan for the Penryn Road Overcrossing (Br. No. 19-0099) circa 1958.

- As-Built Bents Plan for the Penryn Road Overcrossing (Br. No. 19-0099) circa 1958.
- Foundation Recommendations Memorandum by R. W. Reynolds and T. L. Sommers for the Penryn Road Overcrossing (Br. No. 19-0099) dated January 9, 1957.
- Bridge Inspection Report by Anthony Fernandes for the Penryn Road Overcrossing (Br. No. 19-0099) dated November 19, 2007.

Project Description

The current bridge was built in 1959. The structure was built as a continuous four span reinforced concrete (RC) box girder structure supported with RC three-column bents and RC open-end seat abutments. According to the As-Built General Plan circa 1958, Abutment 5 is on extended RC two-columns founded on spread footings and the bents are supported on spread footings. According to the As-Built General Plan circa 1958, Abutment 1 is founded on driven concrete piles (Raymond Step-taper piles).

According to the Planning Study sheet, the existing columns will be cut and the bridge will be raised one foot and six inches.

Summary of Site Geology and Subsurface Conditions

Regional Setting and Area Geology

The project site is located within the northern section of the Sierra Nevada geomorphic province. The Sierra Nevada geomorphic province is approximately 65 to 160 kilometers in width. It is bounded on the west by the Great Valley province and on the east by the Basin and Range province. Formation of the Sierra Nevada geomorphic province began approximately 50 million years ago with the uplift of the Sierra Nevada batholith. Tectonic activity along the Basin and Range fault system located to the east of the Sierra Nevada Range, resulted in the asymmetric, westward tilting of the Sierra Nevada. The geomorphology of the Sierra Nevada is generally the result of extensive weathering and erosion occurring during uplift.

The Geologic Map of the Sacramento Quadrangle, scale 1:250,000, compiled by D. L. Wagner, C. W. Jennings, T. L. Bedrossian, and E. J. Bortugno, 1981, California Geological Survey (formerly the Division of Mines and Geology) indicates the area geology of the site consists of Mesozoic plutonic rocks defined as dioritic rocks (Mzd), quartz diorite, diorite and trondhjemite.

Subsurface Conditions

According to the As-Built Log of Test Borings sheet (circa 1958), a foundation investigation was completed in 1956. The 1956 subsurface investigation consisted of three 2.5-inch diameter rotary borings (wet) extending to a maximum depth of approximately 20.0 feet and five 1.0-inch diameter sampler borings (dry) extending to a maximum depth of approximately 12.0 feet. According to the As-Built LOTB (circa 1958), the site is underlain by slightly compact reddish brown silty fine to coarse granitic sand overlying very dense reddish brown, light gray and tan decomposed granite.

According to the Foundation Recommendations Memorandum by R. W. Reynolds and T. L. Sommers for the Penryn Road Overcrossing (Br. No. 19-0099) dated January 17, 1957, prominent Jurassic granite outcrops are at the site. The granite is overlain by a thin soil mantle which rapidly grades to weathered granite.

Groundwater

According to the As-Built Log of Test Borings sheet (circa 1958) and the Foundation Recommendations Memorandum by R. W. Reynolds and T. L. Sommers (1957), groundwater was not encountered at the site. Groundwater surface elevations are subject to seasonal fluctuations and may occur at higher or lower elevations depending on the conditions at time of construction.

Scour Evaluation

There is no scour potential at the site, since the bridge does not span a watercourse.

Corrosion Evaluation

Laboratory testing to determine corrosion potential has not been performed at the site.

Seismic Recommendations

Based on the new Caltrans Seismic Design Criteria (SDC), the deterministic spectrum is obtained as the arithmetic average of median response spectra calculated using the Campbell-Bozorgnia (2008) and Chiou-Youngs (2008) ground motion prediction equations, and the probabilistic spectrum is obtained from the (2008) USGS Seismic Hazard Map (Petersen, 2008) for the 5% in 50 years probability of exceedance (or 975 year return period) with appropriate soil amplification factors.

In some cases where the aforementioned spectrum does not produce the minimum ground motion as defined by Caltrans SDS, a statewide lowest spectral acceleration associated with a seismic source of a maximum moment magnitude MMax of 6.5 and a vertical strike-slip event at a distance of about 7.5 miles must be used for design purposes. The design of a structure may be based on an envelope of spectral accelerations generated by two, or all three previously mentioned methods.

Based on the 2011 fault data, the controlling fault is the Foothills Fault System north central reach section (Deadman fault, Fault ID#100) with a maximum moment magnitude, MMax of 6.5. This fault is characterized as normal with a dip of 90 degrees (vertical dip) and is located to the northeast of the bridge. The nearest distance to the fault rupture plane is measured to be about 5.8 miles.

Based on the As-Built Log of Test Borings dated December 1956, the estimated shear wave velocity (V_{s30}) is about 1840 feet per second.

The attached Figure 1, design Acceleration Response Spectrum (ARS) curve, is an envelope of the spectral accelerations associated with the controlling fault and the probabilistic approach. The Peak Ground Acceleration is about 0.21g.

The potential for surface rupture at the site due to fault movement is considered insignificant since there are no known faults projecting towards or passing directly through the project site; the liquefaction potential is considered to be insignificant.

As-Built Foundation Data

According to the As-Built Plans, the existing structure is supported on spread footings at Abutment 5 and the bent locations. The existing structure is supported on driven concrete piles (Raymond Step-taper) at Abutment 1 and the Abutment 5 wingwall location. The bottom of footing elevations for the spread footings is 435.0 feet at Abutment 5, 425.0 feet at Bent 2, 424.0 feet at Bent 3, and 428.0 feet at Bent 4. A footing pressure of 5 tons per square foot (tsf) was shown on the As-Built Foundation Plan for the footings at Abutment 5 and the bents. The existing footing width at the Abutment 5 location is 6.0 feet. The exiting footing widths at the bents are 9.0 feet. Driven concrete piles (Raymond Step-taper) with a design load of 45 tons were installed at Abutment 1 and the Abutment 1 and Abutment 5 wingwall locations. The average pile tip elevation at the Abutment 1 location is 428.2 feet and the average pile tip elevation at the Abutment 5 wingwall is 432.0 feet.

Foundation Recommendations

The load demands shown in Tables 1 and 2 were included in the request for the FR dated February 15, 2012 and are for raising (one foot and six inches) the existing Penryn Road Overcrossing (Br. No. 19-0099).

Table 1. Load Demands provided for Abutment 1 location

Location	Working Stress Design Loading	
	Compression (tons)	Tension (tons)
Abutment 1	48	0

Table 2. Load Demands provided for Abutment 5 and Piers 2, 3 and 4 locations

Location	Design Method	Bottom of Footing Elevation (ft)	Minimum Width (inch)	Design Loading (tsf)
Bent 2	WSD	425.0	108	3.0
Bent 3	WSD	424.0	108	3.5
Bent 4	WSD	428.0	108	3.0
Abutment 5	WSD	435.0	72	5.3

Based on the As-Built LOTB, the driving of a pile was logged at Abutment 1 and at the Abutment 5 wingwall locations; and the average pile tips were provided for all driven concrete piles (Raymond Step-taper). According to the driving records and average pile tips for these piles, the existing piles will support the small increase in the load provided above in Table 1. The Designer should determine whether the structural capacity of the pile is exceeded. A Foundation Recommendations Memorandum by R. W. Reynolds and T. L. Sommers for the Penryn Road Overcrossing (Br. No. 19-0099) dated January 9, 1957 was completed for the original construction of the overcrossing. This report recommended a design bearing pressure (allowable bearing pressure) of 5 tsf for Bents 2, 3 and 4 and Abutment 5. The loads provided for Bents 2, 3, and 4 shown above in Table 2 are less than the original recommendations and are considered adequate based on the As-Built LOTB. Based on the As-Built LOTB, the spread footing at Abutment 5 will support the small increase in the load provided in Table 2.

The Foundation and Seismic Recommendations included in this report are based on specific project information regarding structure type and structure location that has been provided by the Office of Bridge Design North, Design Branch 3. Any questions regarding the above recommendations should be directed to the attention of Jacqueline A Martin (916) 227-1051 or Reid Buell (916) 227-1012, Geotechnical Services, Office of Geotechnical Design-North, Branch A.

PROFESSIONAL GEOLOGIST
JACQUELINE A. MARTIN
No. 8705
Exp. 10/31/12
STATE OF CALIFORNIA

Jacqueline A. Martin

JACQUELINE A MARTIN
Engineering Geologist
Office of Geotechnical Design-North

REGISTERED PROFESSIONAL ENGINEER
REZA MAHALLATI
No. 49374
Exp. 9/30/12
CIVIL
STATE OF CALIFORNIA

Reza M

REZA MAHALLATI
Senior Materials & Research Engineer
Office of Geotechnical Design-North

Attachments: 1. Acceleration Response Spectrum (ARS)
2. Foundation Recommendations Memorandum by R. W. Reynolds and T. L. Sommers for the Penryn Road Overcrossing (Br. No. 19-0099) dated January 9, 1957

cc: OGDN
GS File Room
Reid Buell
John Cosmez

REFERENCES

Harden, Deborah R., 1998, California Geology, Prentice Hall, 194-198pp.

Wagner, D.L., Jennings, C.W., Bedrossian, T.L., and Bortugno, E. J., 1981, Geologic Map of California the Sacramento Quadrangle, California, 1:250,000: California Division of Mines and Geology, Regional Geologic Map 1A.

Federal Highway Administration (FHWA), Shallow Foundations (Pub. No. FHWA-NHI-01-023) published June 2001.

Seismic Design Criteria (2011), California Department of Transportation.

State of California, Department of Transportation (Caltrans):

- Bridge Standard Details Sheets, April 2000.
- Memo to Designers, Section 3-1, July 2008.
- Memo to Designers, Section 1-35, June 2008.

Penryn OC

Bridge No. **19-0099**

EA No. **03-3E1000**

Latitude 38.8338

Longitude -121.1685

Control **Envelope**

Period (s)	Sa(g)
0.010	0.212
0.020	0.216
0.030	0.231
0.050	0.282
0.075	0.362
0.100	0.435
0.120	0.476
0.150	0.523
0.200	0.543
0.250	0.513
0.300	0.477
0.400	0.409
0.500	0.342
0.750	0.250
1.000	0.202
1.500	0.133
2.000	0.106
3.000	0.065
4.000	0.044
5.000	0.036

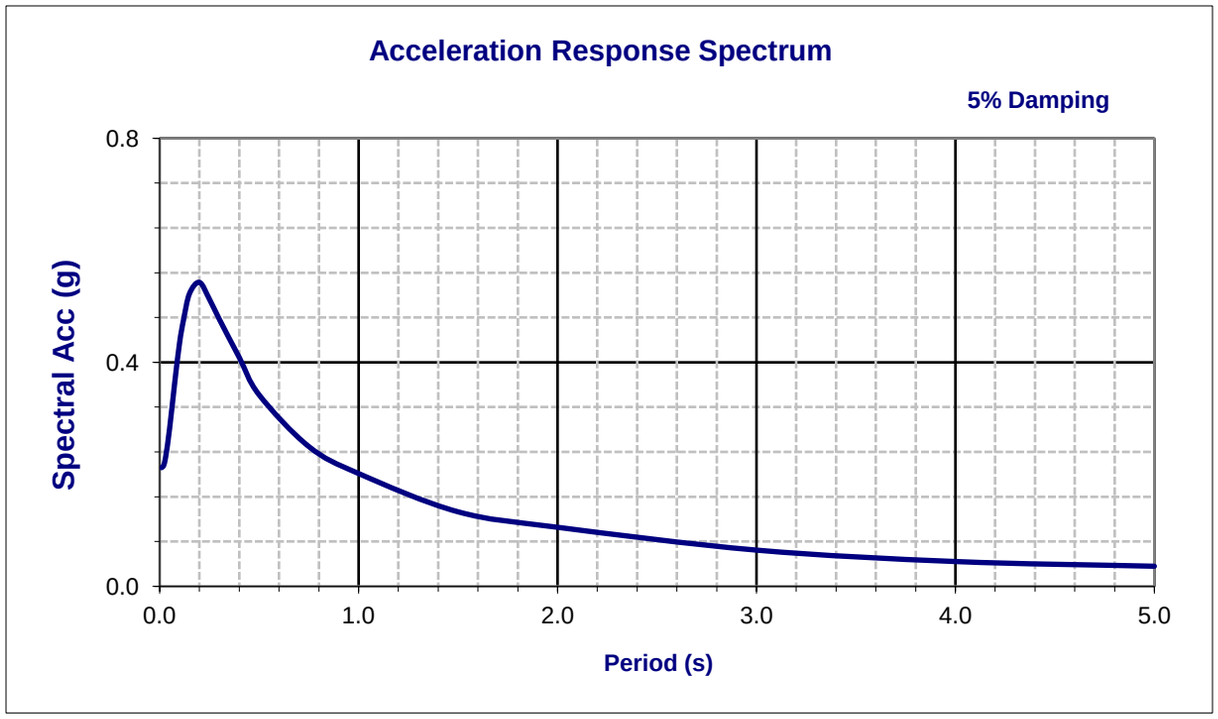

Deterministic Procedure Data

Fault	Foothills Fault System north central reach section (Deadman fault)		R_{rup}	9.4	km
Fault ID	100		R_{jb}	9.4	km
Style	N		R_x	9.4	km
Mmax	6.5		V_{S30}	560	m/s
Dip	90	deg	$Z_{1.0}$	N/A	m
Z_{TOR}	0	km	$Z_{2.5}$	N/A	km

Notes

Please note the Design ARS curve is based on the envelpoe of the deterministic and probabilitic methods.

The probabilitic method is based on the USGS 5% probability of exceedance in 50 years (975 years return period).

Final

Design Response Spectrum

THIS COPY FOR
FROM BRIDGE DEPARTMENT

Penryn [redacted] Road Overcrossing
III-Pla-17-A
Bridge No. 19-99

January 9, 1957

Mr. C. R. Poppe:

Foundation Data:

A foundation investigation study was conducted at the above named structure site during December 1956 by the Geology Section of the Bridge Department. The study consisted of five 1" drive sample borings and three rotary sample borings. See Log of Test Borings sheet: Drawing No. FR-5029-4.

Geology

The structure site occurs in an area characterized by gentle rolling hills and prominent Jurassic granite outcrops. At the site proper, the granite is overlain by a very thin soil mantle which rapidly grades to weathered in place granite.

No ground water was encountered during the study.

Recommendations

Shallow spread footings founded in weathered granite bedrock are recommended for all structure support. The footings may be designed for loads up to and including five tons per square foot.

The following table illustrates the recommendations with regard to the proposed structure as shown on the "General Plan" Drawing No. F-5029-1.

Abutment or Bent No.	Recommended Footing Elevation	
	Left Limit	Right Limit
Abutment No. 1	425.0	428.0
Bent No. 2	425.0 or below	425.0 or below
Bent No. 3	424.0 or below	424.0 or below
Bent No. 4	428.0 or below	428.0 or below
Abutment No. 5	435.0	436.0

Report by

R. A. Reynolds

T. L. Sommers

ORIGINAL SIGNED BY
T. L. SOMMERS

RWR nm
cc CRPoppe (2)
TLSommers (2)
Pending File

EST. 3930, 18793-6-55 25M SPO

M e m o r a n d u m

Flex your power!
Be energy efficient!

To: JOSEPH E. DOWNING
BRANCH CHIEF
Structure Design Branch 3
Office of Bridge Design North
Division of Engineering Services

Date: April 12, 2012

File: 03-PLA-80- PM 12.30
Gilardi Road OC
Br. No. 19-0101
EA 03-3E1000

ATTN: Ali Asnaashari

From: **DEPARTMENT OF TRANSPORTATION**
DIVISION OF ENGINEERING SERVICES
Geotechnical Services – MS 5
Office of Geotechnical Design – North

Subject: Foundation Report (FR) for the Gilardi Road Overcrossing

Introduction

Per your request dated February 15, 2012, the Office of Geotechnical Design-North (OGD-N), Branch A has prepared the Foundation Report (FR) for raising the Gilardi Road Overcrossing (Br. No. 19-0101) located on Interstate 80 at PM 12.30, in Placer County, California. The project proposes to raise six structures to meet vertical clearance requirements for permit vehicles along Interstate 80 between Roseville and the Nevada border.

Our Office has evaluated the site conditions and geology based on a review of the existing As-Built Plans, available geologic literature and geologic maps. A field investigation and laboratory testing was not performed for the completion of the FR.

Please note that the elevations shown on the As-Built plans were used to complete this report. The Vertical Datum was not provided for the completion of this report.

The following Department of Transportation, Caltrans records and resources were used for the FR:

- General Plan for the Gilardi Road Overcrossing (Br. No. 19-0101) dated January 27, 2011.
- As-Built General Plan for the Gilardi Road Overcrossing (Br. No. 19-0101) circa 1958.
- As-Built Foundation Plan for the Gilardi Road Overcrossing (Br. No. 19-0101) circa 1958.
- As-Built Abutments Plan for the Gilardi Road Overcrossing (Br. No. 19-0101) circa 1958.
- As-Built Bents Plan for the Gilardi Road Overcrossing (Br. No. 19-0101) circa 1958.

- As-Built Log of Test Boring (LOTB) for the Gilardi Road Overcrossing (Br. No. 19-0101) circa 1958.
- Foundation Recommendations Memorandum by C. Marek and T. L. Sommers for the Gilardi Road Overcrossing (Br. No. 19-0101) dated November 21, 1956.
- Bridge Inspection Report by Anthony Fernandes for the Gilardi Road Overcrossing (Br. No. 19-0101) dated November 19, 2007.

Project Description

The current bridge was built in 1959. The structure was built as a continuous four span reinforced concrete (RC) box girder structure supported with RC three-column bents and RC open-end seat abutments. The abutments and bents are founded on spread footings.

According to the General Plan sheet, the existing columns will be cut and the bridge will be raised one foot and six ¼ inches.

Summary of Site Geology and Subsurface Conditions

Regional Setting and Area Geology

The project site is located within the northern section of the Sierra Nevada geomorphic province. The Sierra Nevada geomorphic province is approximately 65 to 160 kilometers in width. It is bounded on the west by the Great Valley province and on the east by the Basin and Range province. Formation of the Sierra Nevada geomorphic province began approximately 50 million years ago with the uplift of the Sierra Nevada batholith. Tectonic activity along the Basin and Range fault system located to the east of the Sierra Nevada Range, resulted in the asymmetric, westward tilting of the Sierra Nevada. The geomorphology of the Sierra Nevada is generally the result of extensive weathering and erosion occurring during uplift.

The Geologic Map of the Sacramento Quadrangle, scale 1:250,000, compiled by D. L. Wagner, C. W. Jennings, T. L. Bedrossian, and E. J. Bortugno, 1981, California Geological Survey (formerly the Division of Mines and Geology) indicates the area geology of the site consists of Mesozoic plutonic rocks defined as dioritic rocks (Mzd), quartz diorite, diorite and trondhjemite.

Subsurface Conditions

According to the As-Built Log of Test Borings sheet (circa 1958), a foundation investigation was completed in 1956. The 1956 subsurface investigation consisted of three 2.25-inch diameter cone penetrometer tests extending to a maximum depth of approximately 7.0 feet. There is no description of the subsurface material shown on the As-Built LOTB (circa 1958).

According to the Foundation Recommendations Memorandum by C. Marek and T. L. Sommers for the Gilardi Road Overcrossing (Br. No. 19-0101) dated November 21, 1956, a foundation investigation and a geologic inspection was completed in October 1956. The material investigated and inspected at the site consisted of granitic rock, parts which are weathered and fractured.

Groundwater

According to the As-Built Log of Test Borings sheet (circa 1958) and the Foundation Recommendations Memorandum by R. W. Reynolds and T. L. Sommers (1957), groundwater was not encountered at the site. Groundwater surface elevations are subject to seasonal fluctuations and may occur at higher or lower elevations depending on the conditions at time of construction.

Scour

There is no scour potential at the site, since the bridge does not span a watercourse.

Corrosion Evaluation

Laboratory testing to determine corrosion potential has not been performed at the site.

Seismic Recommendations

Based on the new Caltrans Seismic Design Criteria (SDC), the deterministic spectrum is obtained as the arithmetic average of median response spectra calculated using the Campbell-Bozorgnia (2008) and Chiou-Youngs (2008) ground motion prediction equations, and the probabilistic spectrum is obtained from the (2008) USGS Seismic Hazard Map (Petersen, 2008) for the 5% in 50 years probability of exceedance (or 975 year return period) with appropriate soil amplification factors.

In some cases where the aforementioned spectrum does not produce the minimum ground motion as defined by Caltrans SDC, a statewide lowest spectral acceleration associated with a seismic source of a maximum moment magnitude MMax of 6.5 and a vertical strike-slip event at a distance of about 7.5 miles must be used for design purposes. The design of a structure may be based on an envelope of spectral accelerations (SA) generated by two, or all three previously mentioned methods. In this case, the design sa is an envelope of the deterministic and probabilistic methods.

Based on the 2011 fault data, the controlling fault is the Foothills Fault System north central reach section (Deadman fault, Fault ID#100) with a maximum moment magnitude, MMax of 6.5. This fault is characterized as normal with a fault dip of 90 degrees (vertical dip) and is located to the northeast of the bridge. The nearest distance to the fault rupture plane is measured to be about 3.9 miles.

Based on the As-Built Log of Test Borings dated October 1956, the estimated shear wave velocity (V_{s30}) is about 1840 feet per second.

The attached Figure 1, design Acceleration Response Spectrum (ARS) curve, is based on a rupture by the controlling fault. The Peak Ground Acceleration is about 0.27g.

The potential for surface rupture at the site due to fault movement is considered insignificant since there are no known faults projecting towards or passing directly through the project site; the liquefaction potential is considered to be insignificant.

As-Built Foundation Data

According to the As-Built Plans, the existing structure is supported on spread footings at all support locations. The bottom of footing elevations for the spread footings are 679.0 feet at Abutment 1 Right and 679.5 feet at Abutment 1 Left, 662.5 feet at Bent 2, 660.0 feet at Bent 3, and 658.5 feet at Bent 4, and 675.0 feet at Abutment 5 Right and 674.5 feet at Abutment 5 Left. A footing pressure of 4 tons per square foot (tsf) was shown on the As-Built Foundation Plan for the footings at or below original ground. The existing footing widths at the abutments are 5.5 feet. The exiting footing widths at the bents are 6.0 feet for the left and right footing and 8.0 feet for the center footing.

Foundation Recommendations

The load demands shown in Table 1 were included in the request for the FR dated February 15, 2012 and are for raising (one foot and six ¼ inches) the existing Gilardi Road Overcrossing (Br. No. 19-0101).

Table 1. Load Demands provided for all support locations

Location	Design Method	Bottom of Footing Elevation (ft)	Minimum Width (inch)	Design Loading (tsf)
Abutment 1 Right	WSD	679.0	66	2.0
Abutment 1 Left	WSD	679.5	66	2.0
Bent 2	WSD	662.5	72	3.6
Bent 3	WSD	660.0	72	4.0
Bent 4	WSD	658.5	72	3.6
Abutment 5 Right	WSD	675.0	66	2.0
Abutment 5 Left	WSD	674.5	66	2.0

A Foundation Recommendations Memorandum by C. Marek and T. L. Sommers for the Gilardi Road Overcrossing (Br. No. 19-0101) dated November 21, 1956 was completed for the original construction of the overcrossing. This report recommended a design bearing pressure (allowable bearing pressure) of 4 tsf below original ground for all support locations. The loads provided above in Table 1 are less than the original recommendations and are considered adequate based on the As-Built LOTB.

The Foundation and Seismic Recommendations included in this report are based on specific project information regarding structure type and structure location that has been provided by the Office of Bridge Design North, Design Branch 3. Any questions regarding the above recommendations should be directed to the attention of Jacqueline A Martin (916) 227-1051 or Reid Buell (916) 227-1012, Geotechnical Services, Office of Geotechnical Design-North, Branch A.

PROFESSIONAL GEOLOGIST
JACQUELINE A. MARTIN
No. 8705
Exp. 10/31/12
STATE OF CALIFORNIA

REGISTERED PROFESSIONAL ENGINEER
REZA MAHALLATI
No. 49374
Exp. 9/30/13
CIVIL
STATE OF CALIFORNIA

Jacqueline A. Martin

JACQUELINE A MARTIN
Engineering Geologist
Office of Geotechnical Design-North

Reza M

REZA MAHALLATI
Senior Materials & Research Engineer
Office of Geotechnical Design-North

Attachments: 1. Acceleration Response Spectrum (ARS)
2. Foundation Recommendations Memorandum by C. Marek and T. L. Sommers for the Gilardi Road Overcrossing (Br. No. 19-0101) dated November 21, 1956

cc: OGDN
GS File Room
Reid Buell
John Cosmez

REFERENCES

Harden, Deborah R., 1998, California Geology, Prentice Hall, 194-198pp.

Wagner, D.L., Jennings, C.W., Bedrossian, T.L., and Bortugno, E. J., 1981, Geologic Map of California the Sacramento Quadrangle, California, 1:250,000: California Division of Mines and Geology, Regional Geologic Map 1A.

Federal Highway Administration (FHWA), Shallow Foundations (Pub. No. FHWA-NHI-01-023) published June 2001.

Seismic Design Criteria (2009), California Department of Transportation.

State of California, Department of Transportation (Caltrans):

- Bridge Standard Details Sheets, April 2000.
- Memo to Designers, Section 3-1, July 2008.
- Memo to Designers, Section 1-35, June 2008.

Gilardi Road OC

Bridge No. **19-0101**

EA No. **03-3E1000**

Latitude 38.8543

Longitude -121.1437

Control **Envelope**

Period (s)	Sa(g)
0.010	0.274
0.050	0.365
0.100	0.546
0.150	0.651
0.200	0.688
0.250	0.660
0.300	0.619
0.400	0.538
0.500	0.455
0.600	0.395
0.700	0.352
0.850	0.305
1.000	0.270
1.200	0.218
1.500	0.165
2.000	0.111
3.000	0.064
4.000	0.044
5.000	0.035

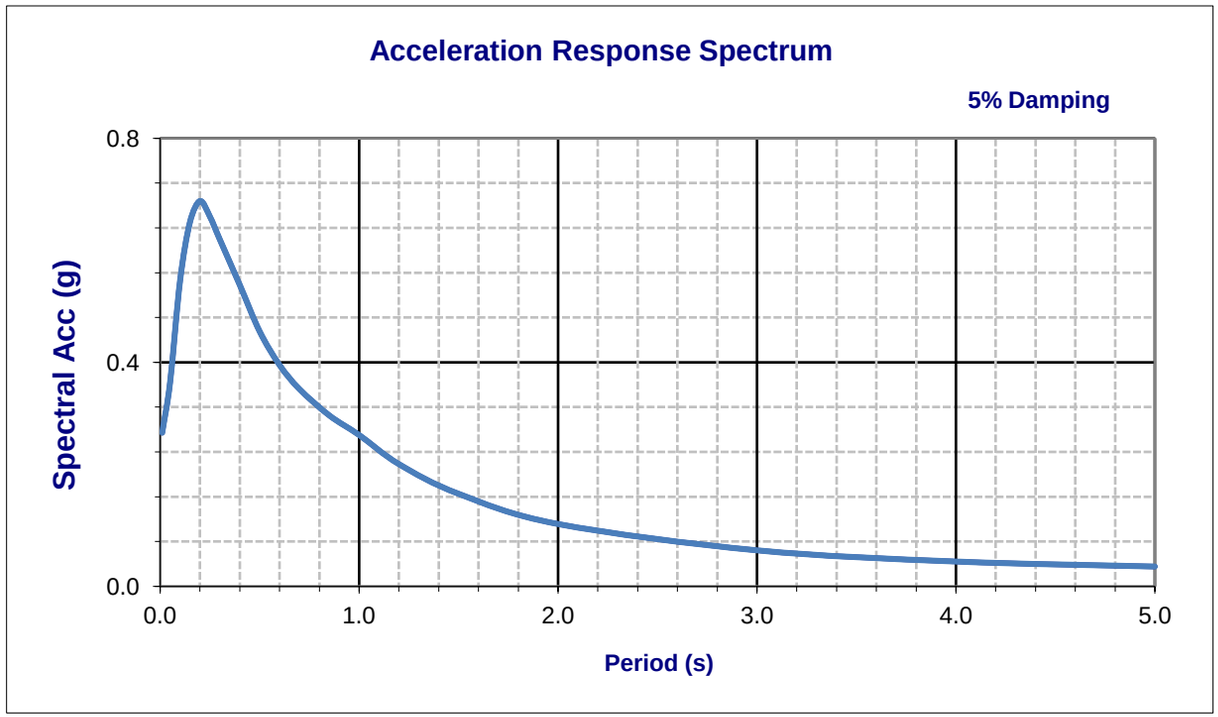

Deterministic Procedure Data

Fault	Foothills Fault System north central reach section (Deadman fault)		R_{rup}	6.3	km
Fault ID	100		R_{jb}	6.3	km
Style	N		R_x	6.3	km
Mmax	6.5		V_{S30}	560	m/s
Dip	90	deg	$Z_{1.0}$	N/A	m
Z_{TOR}	0	km	$Z_{2.5}$	N/A	km

Notes

Please note the Design ARS curve is based on the envelope of the deterministic and probabilistic methods.

Note the probabilistic method is based on the 5% probability of exceedane in 50 years (975 years return period).

Final

Design Response Spectrum

rcd 11-21

CM sl 11-21-56

Gilardi Rd. O.C.
III-Pla-17-A
19-101

November 21, 1956

Mr. C. R. Poppe:

Three penetrometer tests and a geologic inspection were made at the above named structure site by the Bridge Department during October, 1956.

The material at the site consists of granitic rock, parts of which are weathered and fractured. This material will provide adequate foundation support for the proposed structure.

Ground water was not encountered at this site during October, 1956.

FOUNDATION RECOMMENDATIONS

It is recommended that footing foundations be used for structure support. Design loads of 4 T.S.F. can be used at or lower than four feet below original ground.

By

C. Marek

T. L. Sommers

State of California
Department of Transportation

Business, Transportation and Housing Agency

Memorandum

Flex your power!
Be energy efficient!

To: CHARLES W. LAUGHLIN
Chief, Design M-7
North Region-Division of Engineering

Attention: Rodolfo Avila Jr.

Date: November 8, 2012

File: 03-3E1001 (0300000473)
03-PLA 80-PM 8.13/37.78
Vertical Clearance for
Permit Vehicles at:
Newcastle Rd Overcrossing
PM 13.13 (Br. No. 19-0102)
Newcastle Underpass
PM 13.99 (Br. No. 19-0103)
Weimar Cross Road OC
PM 29.32 (Br. No. 19-0083)

From: **DEPARTMENT OFTRANSPORTATION**
DIVISION OF ENGINEERING SERVICES
GEOTECHNICAL SERVICES – MS 5

Subject: Geotechnical Design Report

INTRODUCTION

Per your request, the Office of Geotechnical Design- North (OGDN) has prepared this Geotechnical Design Report (GDR) for the proposed project located between post-miles 8.13 and 37.78 of Interstate 80 (I-80) in Placer County. The project proposes to achieve vertical clearance requirements for permit vehicles at various structure locations within the project limits. Vertical clearance requirements will be achieved by either raising structures or lowering roadway grades at structure locations; the content of this GDR is to specifically address geotechnical issues related design and construction at the proposed grade lowering sites.

Proposed Improvements

The project comprises sites at various locations on the I-80 corridor within the project limits of PM 8.13 to 37.78; the overall project begins near the town of Loomis at the westerly toe of the Foothills, and extends northeasterly into the Sierra Nevada foothills, to the town of Magra. According to the GDR request from District 3 North Region, Division of Engineering, Design M-7 (dated January 5 2012), the project currently proposes to increase the vertical clearance to 16 feet and 6 inches at a total of nine bridge locations. According to the "Supplemental Project Scope Summary Report" existing vertical clearances at these nine locations vary from approximately 15 to 16 feet. The

vertical clearance will be obtained by one of two methods: (1) raising the structures deck or (2) lowering the I-80 roadbed profile. Table No. 1 below provides a summary of the proposed work at each of the nine locations. Six of the nine locations will have the structural deck raised and will include seismic upgrades to the structure; Foundation Reports (FRs) have previously been developed by OGDN to provide seismic recommendations and address geotechnical related design of the structures at each of these six sites (see Reference Nos. 19 through 24). It is anticipated that "sliver" type embankment fills will be constructed where needed to raise roadway profiles of associated off-ramps and on-ramps to accommodate raising of structure profiles; the embankment fill slopes are proposed at 2H:1 or flatter. The remaining three sites will have the I-80 roadbed lowered (between roughly 1 and 1.7 feet), and in some cases the roadbeds of adjacent off-ramps and on-ramps will also be lowered to match roadway profiles. Roadbed lowering will include removal of the existing structural section and subgrade materials, as needed, to accommodate the proposed roadway lower-profile and new structural section. Based on structural sections proposed for the project provided by the District Materials Engineer (see Reference Nos. 15 and 16), it is anticipated that cut excavations up to approximately 1 to 2 feet into native materials will be required to achieve the proposed finish subgrade at the base of the proposed structural sections. It is expected that the deepest proposed cut depths would occur immediately below the superstructures, and taper shallower as the roadway profile transitions to match adjacent grades. Grade lowering on adjacent off-ramps and on-ramps is expected as needed to match intersecting roadway profiles.

Table No. 1: Summary of Proposed Vertical Clearance Improvements on PLA 80 between PM 8.13 and 37.78.

Structure	Post Mile (PM)	Bridge No.	Height to Raise Structure Deck(1) (feet)	Depth to Lower I-80 Roadway Grade at Structure(1) (feet)	Existing Structural Section Thickness(2), including ballast, ETW to ETW (feet)	Proposed Structural Section(3) Thickness, (feet)	Proposed depth of excavation into native materials to reach FSG(4) (feet)
Brace Rd OC	8.13	19-0096	1.75	NA	NA	NA	NA
Horseshoe Bar OC	8.72	19-0097	1.50	NA	NA	NA	NA
King Rd OC	9.53	19-0098	1.42	NA	NA	NA	NA
Penryn Rd OC	10.35	19-0099	1.50	NA	NA	NA	NA
Gilardi Rd OC	12.30	19-0101	1.52	NA	NA	NA	NA
Newcastle Rd OC	13.81	19-0102	N/A	1.67 (EB) 1.25 (WB)	2.82 (EB) 1.56 (WB)	2.05 to 2.40	0.9 to 2.1
Newcastle UP	13.99	19-0103	N/A	1.67 (EB) 1.25 (WB)	2.82 (EB) 1.56 (WB)	2.05 to 2.40	0.9 to 2.1
Weimar Crossroad OC	29.32	19-0083	N/A	1.00 (EB/WB)	1.89	2.05 to 2.40	1.2 to 1.5
Magra OC	37.78	19-0092	1.33	NA		NA	NA

Notes:

(1) Provided by Charles Laughlin of District 3 North Region, Division of Engineering, Design M-7 in request dated 1-5-12.
(2) Provided by Rodolfo Avila of District 3 North Region, Division of Engineering, Design M-7 in email dated 1-13-12; EB structural sections include 1.0 feet of ballast.
(3) Provided by Joe Peterson, District Materials Engineer, North Region – Materials Laboratory, Memo dated 6-25-10.
(4) FSG = Finished Subgrade (i.e. grade at base of proposed structural section) within travel-way.

Scope of Work

The scope of this GDR is to primarily address the three sites where grade lowering is proposed. The scope of this GDR does not include evaluation of the long-term design of foundations of bridges included in this project. With the exception of construction related to the proposed embankment slope improvements, content regarding geotechnical design related to the six sites where raising of the structure deck is proposed is available in the referenced FRs. Analysis of seismicity, faulting and corrosion were omitted from our scope of work.

The scope of our work included performing a literature and historical review in an effort to obtain geological and geotechnical data pertaining to the three sites that could provide insight into the design and construction of proposed facilities. The historical review included searching Caltrans intranet as-built and geotechnical report records from the Bridge Inspection Records Information System (BIRIS), the Document Retrieval System (DRS), and the Digital Archive of Geotechnical Data (GeoDOG) databases. A field investigation was performed which included a reconnaissance of the three project sites on and intermittent basis between May 28 and June 4, 2012 by an OGDN geologist and engineer. Subsurface exploration through borings and/or other means has been specifically omitted from our scope of work . Subsequently, OGDN has performed an engineering analysis and prepared this report summarizing findings, conclusions and recommendations.

FINDINGS

General Background

The I-80 facility is considered a critical corridor facility for interstate commerce to and from California. Recreation traffic uses this route to access the Sierra Nevada Mountains for winter and summer activities as well as regional attractions in Nevada. The portion of I-80 in the project limits was constructed in the late 1950's. Since that time there have been several projects to maintain the roadway, and upgrade the drainage systems and metal-beam guard railing. Within the project limits, the I-80 facility consists of a multi-lane freeway, divided by a concrete barrier.

General Physical Setting

The project comprises sites at various locations on the I-80 corridor within the project limits of PM 8.13 to 37.78; this segment of I-80 begins near the town of Loomis at the westerly toe of the Foothills, and extends northeasterly into the Sierra Nevada foothills, to the town of Magra. The terrain surrounding I-80 near the toe of the foothills is generally characterized as gently rolling, and progressively transitions into steeper, more mountainous terrain towards the east. A-built plans indicated the I-80 profile grade in the project limits to generally be as low as roughly 370 feet elevation (at the Brace Road OC at PM 8.13) and extend as high as elevation 3,000 feet (at the Magra OC at PM 37.78).

Climate

Due to the significant variation of the profile grade elevation within the project limits, climate patterns should be expected to also vary. In general, hotter weather should be expected at lower elevations, and colder weather should be expected at higher elevations. According to a climate narrative for the State of California provided by the Western Regional Climate Center (WRCC), in the Sierra Nevada, snow in moderate amounts is reported nearly every winter at elevations as low as 2,000 feet. Amounts and intensities increase with elevation to around 7,000 or 8,000 feet. Above 4,000 feet elevation snow remains on the ground for appreciable lengths of time each winter. Weather statistics are being provided below for a WRCC weather station near the easterly, higher elevation portion of the project area (at the town of Colfax). Contractors and other project associated personnel should become familiar with local weather patterns by reviewing data available at WRCC website (at www.wrcc.dri.edu/).

According to the WRCC website, the Colfax Station (NCDC COOP ID 041912) is located at an elevation of 2,380 feet above sea level, near the town of Colfax, California. The WRCC provides monthly climate summaries at the Colfax Station for the period of record between 1948 and 2005. The WRCC data reports the average annual precipitation at the Colfax Station to be 47.7 inches, and the average annual snowfall to be 13.7 inches. Additional WRCC data is presented in Chart Nos. 1a and 1b (below) and includes the monthly averages for precipitation, snowfall, and maximum and minimum temperatures.

Chart No. 1a. Average Monthly Precipitation/Snowfall

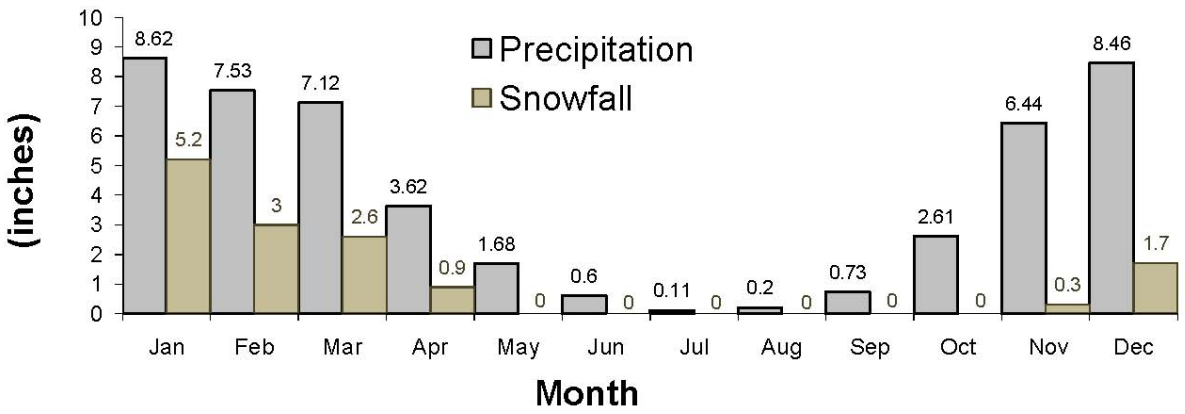

Chart No. 1b. Average Monthly Temperatures

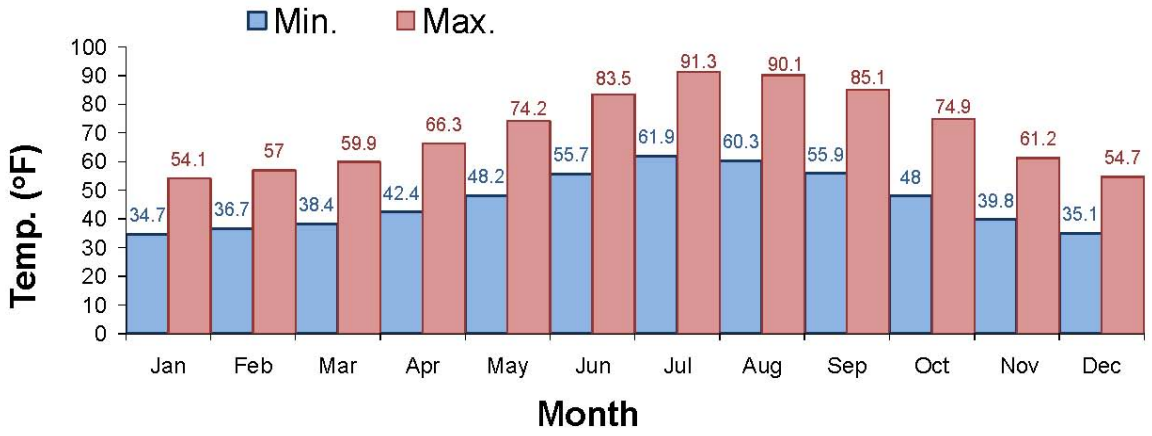

<u>Source:</u> Western Regional Climate Center (at www.wrcc.dri.edu/) located in Placer County, California at about 39°05'N/120°57'W; Elevation about 2,380 feet above sea level. Data compiled from 57 complete years between 1948 and 2005.

Site Descriptions/Background/Existing Facilities

Newcastle Rd OC (PM 13.81)

The Newcastle Road OC (Br. No. 19-0102) is located in the town of Newcastle where the I-80 facility is oriented in the north-south direction. At this location, the I-80 freeway facility is composed of three, asphalt concrete-paved lanes in each direction, separated by a concrete barrier. Based on profiles in as-built plans (Reference No. 3), at the Newcastle Road OC the I-80 roadway was constructed to an elevation of around 900 feet by cutting to a maximum depth of about 8 feet on the EB side, with a and transition to a fill prism on the WB side of up to about 8 feet. Adjacent cut and fill slopes appear to be sloped at about 2H:1V and performing well. The cut-slope adjacent to the EB lanes appears to be comprised of weathered granitic rock.

The Newcastle Road OC was built in 1959. It consists of four spans comprised of continuous reinforced concrete (RC) box girders supported on two-column bents and open seat abutments. The bents are supported on spread footings, while CIDH piles support the abutments. Table No. 2, below, provides foundation information of the existing Newcastle Road OC provided in the as-built plans (Reference No. 3).

Table No. 2: As-Built Foundation Data for the existing Newcastle Rd OC (19-0102)

Location	Foundation Type	Allowable Design Load	Bottom of Footing Elevation (feet)	Specified Tip Elevation (feet)
Abut 1	CIDH	45 tons/pile	909.5	880
Bent 2	Spread Footing	3 TSF	895	
Bent 3	Spread Footing	4 TSF	892	
Bent 4	Spread Footing	4 TSF	881	
Abut 5	CIDH	45tons/pile	912.5	880

Newcastle UP (PM 13.99)

The Newcastle UP (Br. No. 19-0103) is also located in the town of Newcastle and the I-80 freeway facility is composed of three, asphalt concrete-paved lanes in each direction, separated by a concrete barrier. The Newcastle UP was constructed in 1959 to carry the existing South Pacific Railroad (SPRR) tracks over I-80. Based on as-built plans, the I-80 facility at this location was constructed as a through-cut of the SPRR facility; the cut extended as deep as roughly 30 feet, transecting the railroad embankment fill. The current roadway grade elevation where I-80 passes beneath the structure appears to be

around 933 feet. As-built plans indicate that construction of the UP required a railroad "shoofly" (temporary railroad realignment embankment) to accommodate railroad traffic during construction.

The Newcastle UP structure has four simple-spans consisting of steel riveted girders, with RC 3-column bents and RC open-end seat abutments, all on spread footing foundations. Abutment 1 is on extended RC columns. The as-built foundation information of the existing Newcastle UP Bridge is summarized in the Table No. 3, below. Bent 3 is situated at the existing I-80 centerline. The 1956 Foundation Data/Recommendations Report (Reference No. 2) for the structure indicates that the spread footings where intended to be founded at least two feet into "weathered-in-place granite".

Table No. 3: As-Built Foundation Data for the existing Newcastle UP (19-0103)

Location	Pile Type	Allowable Design Load	Bottom of Footing Elevation (feet)
Abut 1	Spread Footing	6 TSF	930
Bent 2	Spread Footing	6 TSF	925
Bent 3	Spread Footing	6 TSF	926
Bent 4	Spread Footing	6 TSF	925
Abut 5	Spread Footing	6 TSF	946

A District Preliminary Geotechnical Report (DPGR, see Reference No. 14) for the project indicated erosion of materials around the Abutment 1 foundation; this condition was observed to still exist in our site visits (see Photo No. 1). The existing cutslopes appear to be sloped at approximately 2H:1V. The easterly cutslope appears composed primarily of weathered granitic rock; surface exposures of fresh granitic rock were noted near the toe of the easterly cutslope, the most significant of which is just south of Bent 4 (see Photo No. 2).

Weimar Crossroad OC (PM 29.32)

The Weimar Crossroad OC (Br. No. 19-0083) is located near the town of Applegate. At this location, the I-80 freeway facility is composed of two, asphalt concrete-paved lanes in each direction, separated by a concrete barrier. Based on profiles in as-built plans (Reference No. 1), at the Weimar Crossroad OC the I-80 roadway was constructed as a through cut as deep as 20 feet, to an elevation of around 2,237 feet. Adjacent cut-slopes appear to be sloped at about 1.5H:1V and performing well. Rock materials exposed on the cutslopes appeared to be composed primarily of moderately soft to hard, partially to completely serpentinized ultramafic rock. On the easterly (right) cutslope, about 20 percent of the expose rock materials appeared composed of hard gabbro.

The Weimar crossroad OC was built in 1958 and consists of two spans comprised of continuous RC box girders supported on a two-column bent and RC closed end-backfilled cantilever abutments. The bent and abutments are supported on spread footings. Foundation information for the Weimar Crossroad OC from as-built plans is provided in the Table No. 4, below.

Table No. 4: As-Built Foundation Data for the existing Weimar OC (19-0083)

Location	Pile Type	Allowable Design Load	Bottom of Footing Elevation (feet)
Abut 1	Spread Footing	6 TSF	2,230.5
Bent 2	Spread Footing	6 TSF	2,232.5
Abut 3	Spread Footing	6 TSF	2,234.5

Geologic Setting

The project is located in the Western Metamorphic Belt (WMB) of the Sierra Nevada Geomorphic Province (Reference No. 4). This belt extends northwest for 200 miles through the west-facing foothills of the central and northern Sierra Nevada mountain range. The WMB consist of a wide variety of metamorphic and igneous rocks emplaced on the western edge of North America through convergent plate-tectonism (colliding of earth's crustal plates) that occurred from about 400 to 120 million years ago (Paleozoic and Mesozoic Eras). From 120 to 80 million years ago, convergent plate-tectonism resulted in a period of continental-margin arc magmatism where intrusion of a number of plutons occurred into the WMB metamorphic rocks. These plutons are part of the Sierra Nevada Batholith, a 400 mile long by 80 wide mosaic of plutons with chemical compositions ranging from quartz diorite to granite. During the Cenozoic Era, from about 66 million years ago to the present, volcanic and sedimentary rocks were deposited on top of this basement of older rocks. Within the WMB, most of the Cenozoic rocks have been removed by erosion. The older basement rocks have been variously deformed by several episodes of folding and faulting. The remaining overlying Cenozoic deposits show little or no deformation.

Geologic/Subsurface Conditions

Newcastle Road OC (PM 13.81)

According to published geologic mapping (Reference Nos. 5 and 7), the Newcastle Road OC site is underlain by the Penryn/Rocklin pluton which is described as a late-Mesozoic-era, basement intrusive igneous formation of dioritic rock. Based on review of the LOTBs from the 1958 as-built plans, the Newcastle Road OC site is underlain by decomposed granite (very fine silty sand) overlying granitic bedrock. "Penetration" borings suggest that the elevation of the top of bedrock is likely no greater than 895 feet within the I-80 roadway area, which would be greater than roughly 5 feet below existing roadway grade. Observations made of nearby cut slopes during site visits revealed exposures of weathered granitic rock which were absent of fresh-appearing, hard, bedrock-like materials.

Newcastle UP (PM 13.99)

According to published geologic mapping (Reference Nos. 5 and 7), the Newcastle UP site is underlain by the Penryn/Rocklin pluton which is described as a late-Mesozoic-era, basement intrusive igneous formation of dioritic rock.

Based on review of the LOTBs from the 1958 as-built plans, the subsurface materials at the Newcastle UP were generally composed of railroad embankment fill overlying "weathered granite"; fill materials described as compact to very compact sand, gravel and cobbles. In-situ testing results of the weathered granite included Standard Penetration Test (SPT) blow counts of greater than 70 blows per foot, and a few call-outs of "refusal" by the one-inch Soil Tube explorations. The surface elevation of the weathered granitic rock encountered beneath the fill in the borings sloped downward from east to west, from an elevation of approximately 955 feet on the right ETW to an elevation of approximately 925 feet at the left ETW. With an I-80 roadway elevation at the UP around 933 feet, the I-80 roadway subgrade appears to have been cut to as much as approximately 10 to 25 feet into the granitic rock formation within the eastbound lane areas of I-80. As previously noted, fresh granitic rock was observed exposed on the easterly (right) cutslope during our field visits (see Photo No. 2).

Weimar Crossroad OC (PM 29.32)

According to the California Divisions of Mines and Geology (CDMG) OFR 95-10, the Weimar Crossroad OC site is located on a contact between Mesozoic rocks of the Clipper Gap Formation (Trcg) and the Mariposa Formation (Jm). The two formations are described as follows:

Trcg Highly disrupted assemblage of thin to massive beds of chert and argillite with small, isolated lenses of limestone. Locally tectonically intermixed within a slate matrix (sedimentary mélange).

Jm Dark-gray to black slate with subordinate tuff, conglomerate. Graywacke, and metavolcanic rocks.

The CDMG Regional Geologic Map No. 7A (Reference No. 6) defines this contact between the Trcg and the Jm formations as the Weimar Fault. The referenced geologic maps indicate serpentinized ultramafic rock (um) units to be scattered within the zone around the Weimar Fault. Review of the 1956 as built LOTBs indicated the presence of shallow, weathered, basic igneous rock, including basalt. A few call-outs of "refusal" at shallow depth by one-inch Soil Tube explorations were noted. As previously discussed, rock exposures in cut slopes at the site were exhibited serpentinized ultramafic rock and gabbro.

Naturally Occurring Asbestos (NOA)

The identification of the presence of NOA is being considered primarily for excavations proposed in native undisturbed materials by utilizing mapping and noting rock exposures in cutslopes and natural outcroppings. Our field visits and geologic mapping reviews are performed with the intent to identify serpentinite and partially serpentinized ultramafic rocks, the more common rock types in California to contain NOA. Other rock types in California that may contain NOA are identified in CGS Special Publication 124 (Reference No. 11).

Newcastle Road OC (PM 13.81) & Newcastle UP (PM 13.99)

The California Geologic Survey, or CGS (formerly the CDMG), Special Report 190 (see Plate No. 2) indicates the Newcastle Road OC and the Newcastle UP sites are in an area "least likely" to contain NOA. Published geologic mapping and rock exposures observed in the field did not reveal the presence of rocks that are commonly associated with NOA.

Weimar Crossroad OC (PM 29.32)

CGS SR 190 indicates the Weimar Crossroad OC site to be in an area "most likely" to contain naturally occurring asbestos (NOA). Although ultramafic rock (um) was not identified to be present at his site on published geologic mapping, um is noted to be common to the Weimar Fault Zone that the site is located in. Serpentinite and serpentinized ultramafic rocks were noted at the site in our field visits.

Groundwater

Although the as built LOTBS did not note the presence of a static groundwater within the borings, it is anticipated that a perched groundwater condition could occur atop and within the formational rock materials present at the sites.

CONCLUSIONS & RECOMMENDATIONS

Excavations

Based on the existing bottom of footing (BOF) elevations provided on the as built plans, and on the estimate elevation of the proposed bottom of excavations (i.e. the proposed pavement section subgrade estimated from Table No. 1), it is concluded that the excavations for the proposed grade lowering will not extend below the BOF elevations of the existing spread footings. From a temporary support consideration, the proposed excavations should not affect the integrity of the existing bridge foundations. However, the Contractor should be ultimately responsible for excavation stability, the effects to nearby structures, and the need for excavation shoring.

Based on information provided in the as built LOTBs, and on observed rock exposures at the project sites, it is anticipated that hard granitic bedrock will be encountered at shallow depth when performing excavation for the grade lowering at the Newcastle UP. Hard rock was also observed in cutslopes at the Weimar Crossroad OC. Therefore, OGDN recommends that Caltrans SSP 19-4_X1 “Rock Excavation” be included within the project specifications. Excavation techniques included in SSP-705 are “hydraulic splitters, pneumatic hammers, or other roadway excavation techniques”. The “other roadway excavation techniques” could include single-tooth ripping with a tractor larger than a Caterpillar D9G tractor; however, the contractor should expect the possibility of significantly low productions rates. OGDN estimates that the quantity for the “rock excavation” item number could be up to 20 percent (by volume) of the proposed excavated materials at both of the Newcastle UP and Weimar Crossroad OC sites. In cases, blasting can be considered a cost effective and efficient means to accomplish hard rock excavation; however, blasting may be considered impractical due to the sliver-like excavations proposed. Based on peak particle velocity verses distance data presented in Report No. FHWA/CA/OR-2001/03 (Reference No. 10) it is suggested that blasting methods not be allowed to accomplish excavations for the proposed grade lowering due to the close proximity of the bridge structures. If blasting is allowed, we recommend SSP 19-4_X1 be replaced with SSP 19-4_X2 “Rock Excavation (Controlled Blasting)”.

Embankments

Embankments constructed of locally derived materials may be sloped as steep as 2H:1V.

Naturally Occurring Asbestos (NOA)

Based on the NOA findings previously noted, of the three grade lowering sites, only the Weimar Crossroad OC site was identified as a site that had a general likelihood of containing NOA. The map on Plate No. 2 can be utilized as a guide for the potential presence of NOA in the project limits. The North Region Hazardous Material Officer should be contacted to determine if materials at the sites meet the classification as Naturally Occurring Asbestos (NOA) materials and the need for Airborne Toxic Control Measures (ATCMs) during project construction.

The recommendations contained in this memorandum are based on specific project information regarding scope, type and location of the project that have been provided by District 3. If any conceptual changes to the scope are proposed during final project design, the Office of Geotechnical Design-North should review those changes to determine if the recommendations herein provided are still applicable. The recommendations are also based on an evaluation of the site conditions using available data absent a subsurface investigation.

If you have any questions or need further information regarding this report, please contact Abu Barrie at (916) 227-7169, Mark Hagy at (916) 227-1077, or Reza Mahallati at (916)-227-1033

Report by:

REGISTERED PROFESSIONAL ENGINEER
MARK C. HAGY
No. GE 2838
GEOTECHNICAL
STATE OF CALIFORNIA

MARK HAGY, P.E. G.E.
Transportation Engineer
Office of Geotechnical Design-North, Branch C

E-copy:
Reza Mahallati
Sam Jordan, Project Manager
Cassie Mitchell, Project Coordination Engineer
GS Corporate (E-copy)
D3 DME
GDN File

REFERENCES

1. Caltrans (1956) "Plan and Profile of State Highway, In Placer County, between Heather Glen and Colfax", State of California Dept. of Public Works – Division of Highways, NEW III-PLA-80-25.5/31.6 (III PLA 17 Section B), As Built Plans, Sheets 11 thru 13 of 239 (Profiles) and Sheets 88 thru 99 of 239 (Weimar Crossroad OC), Contract Nos. 57-3TC21 and 57-3TC21-F, approved 10-1-1956.
2. Caltrans (1956) Foundation Data/Recommendations Report for the Newcastle UP, II-Pla-17-B, Bridge No. 19-103, dated October 19, 1956.
3. Caltrans (1958) "Plan and Profile of State Highway, In Placer County, between 0.5 mile east of Roseville and 1.0 mile east of Newcastle", State of California Dept. of Public Works – Division of Highways, NEW III-PLA-80-3.0/14.5 (III PLA 17 Section B), As Built Plans, Sheets 46 thru 51 of 239 (Profiles), and Sheets 200 thru 225 of 239 (Newcastle Road OC and Newcastle UP), Contract No. 59-3TC17, approved 1-6-1958.
4. University of California, Berkeley (1973) "Slope Stability and Foundation Investigation", The Institute of Transportation and Traffic Engineering, University of California, Course Notes prepared by personnel of the Transportation Laboratory, California Division of Highways, September, 1973.
5. CDMG (1981) Geologic Map of the Sacramento Quadrangle, compiled by D. L. Wagner, C. W. Jennings, T. L. Bedrossian and E. J. Bortugno, 1981.
6. CDMG (1992) "Geologic Map of the Chico Quadrangle", California Department of Conservation, Division of Mines and Geology, Regional Map Series Map N. 7A, compiled by G. J. Suacedo and D. L. Wagner, Scale 1: 250,000, 1992.
7. CDMG (1995) "Mineral Land Classification of Placer County, California"; California Dept. of Conservation, Division of Mines and Geology Open File Report 95-10.
8. Caltrans (1999) Preliminary Foundation Recommendations for Weimar Crossroad OC, dated May 18, 1999
9. Caltrans (1999) Preliminary Seismic Design Recommendations for Weimar Crossroad OC, dated April 29, 1999.
10. Caltrans (2001) "Ground Vibration for Monitoring Construction Blasting In Urban Areas", Report No. FHWA/CA/OR-2001/03, Contract No. F-00-OR-10, prepared by Caltrans Division of Structural foundations, April 2001.
11. CGS (2002) Guidelines for Geologic Investigations of Naturally Occurring Asbestos in California", California Geologic Survey Special Publication 124, dated 2002.

REFERENCES (cont'd.)

12. Higgens, C.T. and Clinkenbeard, J.P. (2006) "Relative Likelihood for the Presence of Naturally Occurring Asbestos in Placer County, California", California Geologic Survey Special Report 190.
13. Caltrans (2009) Structure Preliminary Geotechnical Report (SPGR) and Preliminary Seismic Report (PSR), dated August 31, 2009.
14. Caltrans (2009) "District Preliminary Geotechnical Report", prepared by the Caltrans, Division of Engineering Services , Geotechnical Services North, dated October 7, 2009.
15. Caltrans (2010) "Structural Section Recommendations", 03-PLA-80 PM VAR, 03-3E1000, Caltrans Memo prepared by District Materials Engineer, Caltrans North Region-Materials Laboratory, dated June 25, 2010.
16. Caltrans (2010) "Supplemental Structural Section Recommendations", 03-PLA-80 PM VAR, 03-3E1000, Caltrans Memo prepared by District Materials Engineer, Caltrans North Region-Materials Laboratory, dated July 14, 2010.
17. Caltrans (2011) "Supplemental Project Scope Summary Report" prepared by Rodolfo Avila, Jr., Caltrans North Region – Division of Engineering, Design M-7, dated November 2011.
18. Caltrans (2012) "District Final Geotechnical Report Request", Caltrans Memo prepared by the North Region – Division of Engineering, Design M-7, 03-3E1001, PLA 80 pm 8.13-37.9, dated January 5, 2012.
19. Caltrans (2012) " Foundation Report (FR) for the Brace road Overcrossing", 03-PLA-80 PM 8.13, Br. No. 19-0096, 03-3E1000, prepared by Caltrans Geotechnical Services, Office of Geotechnical Design – North, dated April 12, 2012.
20. Caltrans (2012) " Foundation Report (FR) for Horseshoe Bar Overcrossing", 03-PLA-80 PM 8.72, Br. No. 19-0097, 03-3E1000, prepared by Caltrans Geotechnical Services, Office of Geotechnical Design – North, dated April 12, 2012.
21. Caltrans (2012) " Foundation Report (FR) for King Road Overcrossing", 03-PLA-80 PM 9.53, Br. No. 19-0098, 03-3E1000, prepared by Caltrans Geotechnical Services, Office of Geotechnical Design – North, dated April 12, 2012.
22. Caltrans (2012) " Foundation Report (FR) for the Penryn Road Overcrossing", 03-PLA-80 PM 10.35, Br. No. 19-0099, 03-3E1000, prepared by Caltrans Geotechnical Services, Office of Geotechnical Design – North, dated April 12, 2012.
23. Caltrans (2012) " Foundation Report (FR) for Gilardi Road Overcrossing", 03-PLA-80 PM 12.30, Br. No. 19-0101, 03-3E1000, prepared by Caltrans Geotechnical Services, Office of Geotechnical Design – North, dated April 12, 2012
24. Caltrans (2012) " Foundation Report (FR) for Magra Overcrossing", 03-PLA-80 PM 37.78, Br. No. 19-0092, 03-3E1000, prepared by Caltrans Geotechnical Services, Office of Geotechnical Design – North, dated April 12, 2012

Photo No. 1. Erosion at westerly abutment
(Abutment 1) of the Newcastle UP
(photo date 5-28-12).

Photo No. 2. Granitic rock exposure south of
Bent 4 of the Newcastle UP
(photo date 5-28-12).

CALTRANS Division of Engineering Services Geotechnical Services Office of Geotechnical Design - North	EA: 03-3E1001	**PHOTOGRAPHS**	
	Date: November 2012		
	03-PLA-80; PM 8.13-37.78 **GEOTECHNICAL INVESTIGATION**		Plate No. 1

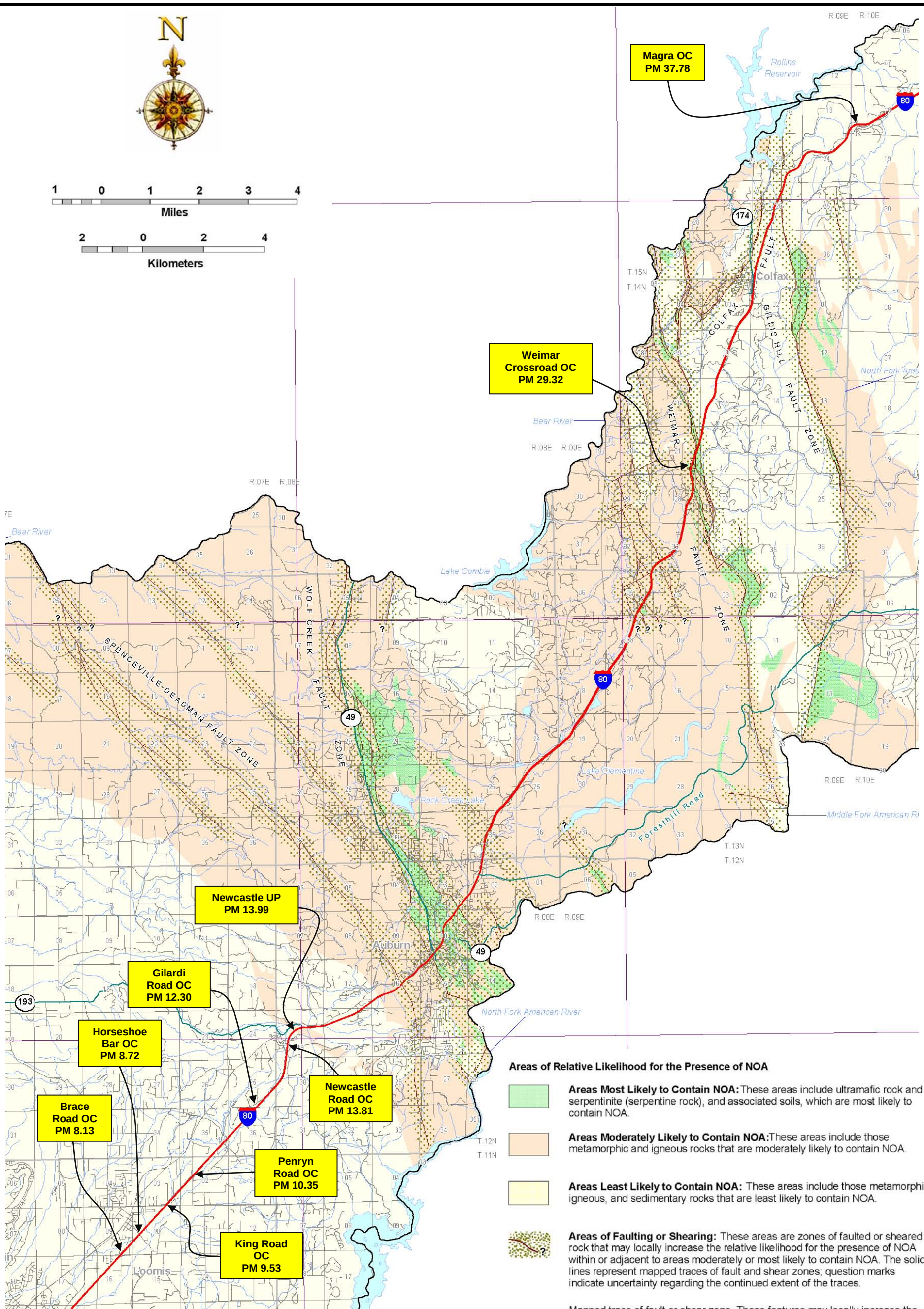

Areas of Relative Likelihood for the Presence of NOA

Areas Most Likely to Contain NOA: These areas include ultramafic rock and serpentinite (serpentine rock), and associated soils, which are most likely to contain NOA.

Areas Moderately Likely to Contain NOA: These areas include those metamorphic and igneous rocks that are moderately likely to contain NOA.

Areas Least Likely to Contain NOA: These areas include those metamorphic, igneous, and sedimentary rocks that are least likely to contain NOA.

Areas of Faulting or Shearing: These areas are zones of faulted or sheared rock that may locally increase the relative likelihood for the presence of NOA within or adjacent to areas moderately or most likely to contain NOA. The solid lines represent mapped traces of fault and shear zones; question marks indicate uncertainty regarding the continued extent of the traces.

Mapped trace of fault or shear zone. These features may locally increase the likelihood for the presence of NOA within areas least likely to contain NOA. The presence of NOA along these features is more likely within areas mapped as most likely or moderately likely to contain NOA as described above.

Base Map Reference: **Higgens, C.T. and Clinkenbeard, J.P. (2006) "Relative Likelihood for the Presence of Naturally Occurring Asbestos in Placer County, California", California Geologic Survey Special Report 190.**

A more detailed explanation can be found in the California Geologic Survey Special Report 190.

CALTRANS
Division of Engineering Services
Geotechnical Services
Office of Geotechnical Design - North

EA: 03-3E1001

Date: November 2012

NATURALLY OCCURRING ASBESTOS (NOA) MAP

03-PLA-80 PM 8.13-37.78
VERTICAL CLEARANCE FOR PERMIT VEHICLES
GEOTECHNICAL DESIGN REPORT

Plate No. 2

Project No. S9300-06-186
April 30, 2012

Alicia Beyer, Task Order Manager
Caltrans District 3
Environmental Engineering Office
P.O. Box 911
703 B Street
Marysville, California 95901

Subject: ASBESTOS AND LEAD-CONTAINING PAINT SURVEY REPORT
MAGRA ROAD OC (BR. NO. 19-0092)
03-PLA-80, POST MILE 37.78
PLACER COUNTY, CA
CONTRACT NO. 03A1368, E-FIS 0300000473.1 (EA 03-3E1001)
TASK ORDER NO. 186

Dear Ms. Beyer:

In accordance with California Department of Transportation Contract No. 03A1368 and Task Order No. 186 (TO-186), we have performed an asbestos and lead-containing paint (LCP) survey of the subject bridge in Placer County, California. The scope of services included surveying the bridge for suspect asbestos-containing materials (ACM) and lead-containing paint, collecting bulk samples, and submitting the samples to laboratories for analyses.

PROJECT DESCRIPTION

The project consists of upgrading the Magra Road Overcrossing (OC), Br. No. 19-0092, at Post Mile (PM) 37.78 on Highway 80 in Placer County, California. The project location is depicted on the Vicinity Map, Figure 1, and Site Plan, Figure 2.

GENERAL OBJECTIVES

The scope of services outlined in TO-186 included the determination of the presence and quantity of asbestos and LCP at the project location prior to various improvements. Assuming that no asbestos is added during future operations, our survey would satisfy National Emissions Standards for Hazardous Air Pollutants (NESHAP) requirements. The information obtained from this investigation will be used by Caltrans for waste profiling, determining California Occupational Safety and Health Administration (Cal/OSHA) applicability, and coordinating asbestos and LCP disturbance activities.

BACKGROUND

Asbestos

The Code of Federal Regulations (CFR), 40 CFR 61, Subpart M, NESHAP and Federal Occupational Safety and Health Administration (FED OSHA) classify ACM as any material or product that contains *greater than* 1% asbestos. Nonfriable ACM is classified by NESHAP as either Category I or Category II material defined as follows:

- **Category I –** asbestos-containing packings, gaskets, resilient floor coverings, and asphalt roofing products.
- **Category II** – all remaining types of nonfriable asbestos-containing material not included in Category I that when dry, cannot be crumbled, pulverized, or reduced to powder by hand pressure.

Regulated asbestos-containing material (RACM), a hazardous waste when friable, is classified as any manufactured material that contains *greater than* 1% asbestos by dry weight *and* is:

- Friable (can be crumbled, pulverized, or reduced to powder by hand pressure); or
- Category I material that has become friable; or
- Category I material that has been subjected to sanding, grinding, cutting, or abrading; or
- Category II nonfriable material that has a high probability of becoming crumbled, pulverized, or reduced to a powder during demolition or renovation activities.

Activities that disturb materials containing *any* amount of asbestos are subject to certain requirements of the Cal/OSHA asbestos standard contained in Title 8, CCR Section 1529. Typically, removal or disturbance of more than 100 square feet of material containing more than 0.1% asbestos must be performed by a registered asbestos abatement contractor, but associated waste labeling is not required if the material contains 1% or less asbestos. When the asbestos content of a material exceeds 1%, virtually all requirements of the standard become effective.

Materials containing more than 1% asbestos are also subject to NESHAP regulations (40 CFR Part 61, Subpart M). RACM (friable ACM and nonfriable ACM that will become friable during demolition operations) must be removed from structures prior to demolition. Certain nonfriable ACM and materials containing 1% or less asbestos may remain in structures during demolition; however, there are waste handling/disposal issues and Cal/OSHA work requirements that must be addressed. Contractors are responsible for segregating and characterizing waste streams prior to disposal.

With respect to potential worker exposure, notification, and registration requirements, Cal/OSHA defines asbestos-containing construction material (ACCM) as construction material that contains more than 0.1% asbestos (Title 8, CCR 341.6).

Lead Paint

Construction activities (including demolition) that disturb materials or paints containing *any* amount of lead are subject to certain requirements of the Cal/OSHA lead standard contained in Title 8, CCR, Section 1532.1. Deteriorated paint is defined by Title 17, CCR, Division 1, Chapter 8, §35022 as a surface coating that is cracking, chalking, flaking, chipping, peeling, non-intact, failed, or otherwise separating from a substrate. Demolition of a deteriorated LCP component would require waste characterization and appropriate disposal. Intact LCP on a component is currently accepted by most landfills and recycling facilities; however, contractors are responsible for segregating and characterizing waste streams prior to disposal.

For a solid waste containing lead, the waste is classified as California hazardous when: 1) the representative total lead content equals or exceeds the respective Total Threshold Limit Concentration (TTLC) of 1,000 milligrams per kilogram (mg/kg); or 2) the representative soluble lead content equals or exceeds the respective Soluble Threshold Limit Concentration (STLC) of 5 milligrams per liter (mg/l) based on the standard Waste Extraction Test (WET). A waste has the potential for exceeding the lead STLC when the waste's representative total lead content is greater than or equal to ten times the respective STLC value since the WET uses a 1:10 dilution ratio. Hence, when total lead is detected at a concentration greater than or equal to 50 mg/kg, and assuming that 100 percent of the total lead is soluble, soluble lead analysis is required. Lead-containing waste is classified as "Resource, Conservation, and Recovery Act" (RCRA) hazardous, or Federal hazardous, when the soluble lead content equals or exceeds the Federal regulatory level of 5 mg/l based on the Toxicity Characteristic Leaching Procedure (TCLP).

The above regulatory criteria are based on chemical concentrations. Wastes may also be classified as hazardous based on other criteria such as ignitability; however, for the purposes of this investigation, toxicity (i.e., lead concentration) is the primary factor considered for waste classification since waste generated during the construction activities would not likely warrant testing for ignitability or other criteria. Waste that is classified as either California-hazardous or RCRA-hazardous requires management as a hazardous waste.

Potential hazards exist to workers who remove or cut through LCP coatings during demolition. Dust containing hazardous concentrations of lead may be generated during scraping or cutting materials coated with lead-containing paint. Torching of these materials may produce lead oxide fumes. Therefore, air monitoring and/or respiratory protection may be required during the demolition of materials coated with LCP. Guidelines regarding regulatory provisions for construction work where workers may be exposed to lead are presented in Title 8, CCR, Section 1532.1.

Architectural Drawings and Previous Survey Activities

Structure architectural plans and bridge maintenance records were not available for our review. We reviewed our prior survey report titled, *Interstate 80 (03-PLA-80) Post Mile 31.1 to 39.0, Placer County, California, Contract No. 03A1368, Task Order No. 105, EA 03-1A7900, Asbestos Survey Report,* dated December 17, 2009 (2009 Survey Report) for information pertaining to previous survey results for the Magra Road OC. Asbestos samples results presented in our 2009 Survey Report are summarized in the Investigative Results section below.

SCOPE OF SERVICES

Mr. Chris Giuntoli, a California-Certified Asbestos Consultant (CAC), certification No. 02-3163 (expiration June 19, 2012), and Certified Lead Paint Inspector/Assessor and Project Monitor with the California Department of Public Health Services (DPH), certification number I-5522 (expiration June 14, 2012), performed the asbestos and LCP survey at the project location on March 23, 2012.

Asbestos

Suspect ACM was grouped into a homogeneous area with representative samples randomly collected. In addition, the potential ACM was evaluated for friability. A total of two bulk asbestos samples representing one suspect component were collected.

Our procedures for inspection and sampling in accordance with TO-186 are discussed below:

- Collected bulk asbestos samples after first wetting friable materials with a light mist of water. The samples were then cut from the substrate and transferred to labeled containers.
- Relinquished bulk asbestos samples to EMSL Analytical, Inc., a California-licensed and Caltrans-approved subcontractor, for asbestos analysis in accordance with United States Environmental Protection Agency (EPA) Test Method 600/R-93/116 using polarized light microscopy (PLM) under chain-of-custody protocol. EMSL Analytical, Inc. is a laboratory accredited by the National Institute of Standards and Technology National Voluntary Laboratory Accreditation Program (NIST-NVLAP) for bulk asbestos fiber analysis. The laboratory analyses were requested on a five-day turnaround time.

Approximate sample locations are presented on Figure 2. Materials represented by the samples collected are shown in the attached photographs.

Lead Paint

One bulk paint sample was collected from suspect LCP observed at the project location. We did not observe deteriorated LCP during our survey. Our sampling procedures in accordance with TO-186 are discussed below:

- Collected a bulk sample of suspect LCP using techniques presented in HUD guidelines. In addition, the painted area was evaluated for evidence of deterioration such as flaking or cracking.
- Relinquished the bulk LCP sample under chain-of-custody protocol to Advanced Technology Laboratories, a California-licensed and Caltrans-approved subcontractor, for lead analysis in accordance with EPA Test Method 6010B. Advanced Technology Laboratories is accredited by the DPH for lead analysis. The laboratory analysis was requested on a five-day turnaround time.

The approximate sample location is presented on Figure 2. The material represented by the sample collected is shown in the attached photographs.

INVESTIGATIVE RESULTS

Asbestos

No asbestos was detected in samples of the suspect material collected during our current survey. Sample identification numbers, material description, approximate quantity, friability assessment, and a summary of the analytical laboratory test results for asbestos are summarized below.

Asbestos was not detected in samples of expansion joint fill material collected during our 2009 survey of the bridge structure. Reproductions of our 2009 Survey Report and the laboratory report and chain-of-custody documentation are attached.

Polarized Light Microscopy (PLM) - EPA Test Method 600/R-93/116				
Sample No.	**Description of Material**	**Approximate Quantity**	**Friable**	**Asbestos Content**
92-1A and B	Expansion joint fill material (abutment)	NA	NA	ND

NA = Not applicable (no asbestos detected)
ND = Not detected

Lead Paint

A sample representing intact yellow traffic striping exhibited a total lead concentration of 4.1 mg/kg.

The sample identification number, description, peeling and flaking quantity, and a summary of the analytical laboratory test result for paint are summarized below. Reproductions of the laboratory report and chain-of-custody documentation are attached.

Total Lead			
Sample No.	**Paint Description**	**Approximate Quantity Peeling/Flaking**	**Total Lead (mg/kg)**
92-P1	Yellow traffic striping	Intact	4.1

mg/kg = milligrams per kilogram (EPA Test Method 6010B)

RECOMMENDATIONS

Asbestos

Since no asbestos was detected in samples collected during our survey, the Cal/OSHA asbestos standard does not apply for planned activities. In addition, demolition debris would not be considered a California hazardous waste based on asbestos content. However, written notification to U.S. EPA Region IX and the California Air Resources Board is required ten working days prior to commencement of *any* demolition activity (whether asbestos is present or not).

Lead Paint

Yellow traffic striping sampled during our survey would not be classified as a California hazardous waste or Federal (RCRA) waste based on lead content if stripped, blasted, or otherwise separated from the substrate.

We recommend that all paints at the project location (graffiti, graffiti abatement, signage, etc.) be treated as lead-containing for purposes of determining the applicability of the Cal/OSHA lead standard during any future maintenance, renovation, and demolition activities. This recommendation is based on LCP sample result and the fact that lead was a common ingredient of paints manufactured before 1978 and is still an ingredient of some paints. In accordance with Title 8, CCR, Section 1532.1(p), written notification to the nearest Cal/OSHA district office is required at least 24 hours prior to certain lead-related work. Compliance and training requirements regarding construction activities where workers may be exposed to lead are presented in Title 8, CCR, Section 1532.1, subsections (e) and (l), respectively. Contractors are responsible for segregating and characterizing waste streams prior to disposal.

REPORT LIMITATIONS

The asbestos and LCP survey was conducted in conformance with generally accepted standards of practice for identifying and evaluating asbestos and LCP in structures. The survey addressed only the structure identified above. Due to the nature of structure surveys, asbestos and LCP use, and laboratory analytical limitations, some ACM or LCP at the project location may not have been identified. Spaces such as cavities, voids, crawlspaces, and pipe chases may have been concealed to our investigator. Previous renovation work may have concealed or covered spaces or materials or may have partially demolished materials and left debris in inaccessible areas. Additionally, renovation activities may have partially replaced ACM with indistinguishable non-ACM. Asbestos and/or LCP may exist in areas of the structure that were not accessible or sampled in conjunction with this TO.

During renovation or demolition operations, suspect materials may be uncovered which are different from those accessible for sampling during this assessment. Personnel in charge of renovation/demolition should be alerted to note materials uncovered during such activities that differ substantially from those included in this or previous assessment reports. If suspect ACM and/or LCP are found, additional sampling and analysis should be performed to determine if the materials contain asbestos or lead.

This report has been prepared exclusively for Caltrans. The information contained herein is only valid as of the date of the report and will require an update to reflect additional information obtained.

This report is not a comprehensive site characterization and should not be construed as such. The findings as presented in this report are predicated on the results of the limited sampling and laboratory testing performed. In addition, the information obtained is not intended to address potential impacts related to sources other than those specified herein. Therefore, the report should be deemed conclusive with respect to only the information obtained. We make no warranty, express or implied, with respect to the content of this report or any subsequent reports, correspondence or consultation. Geocon strived to perform the services summarized herein in accordance with the local standard of care in the geographic region at the time the services were rendered.

The contents of this report reflect the views of the author who is responsible for the facts and accuracy of the data presented herein. The contents do not necessarily reflect the official views or policies of the State of California or the Federal Highway Administration. This report does not constitute a standard, specification, or regulation.

Please contact us should you have any questions concerning the contents of this report or if we may be of further service.

Sincerely,

GEOCON CONSULTANTS INC.

Chris Giuntoli, CAC
Senior Project Scientist

John E. Juhrend, PE, CEG
Project Manager

(2 + 2 CD) Addressee

Attachments:
Figure 1, Vicinity Map
Figure 2, Site Plan
Site Photographs (1 through 5)
Analytical Laboratory Reports and Chain-of-custody Documentation
Geocon 2009 Survey Report

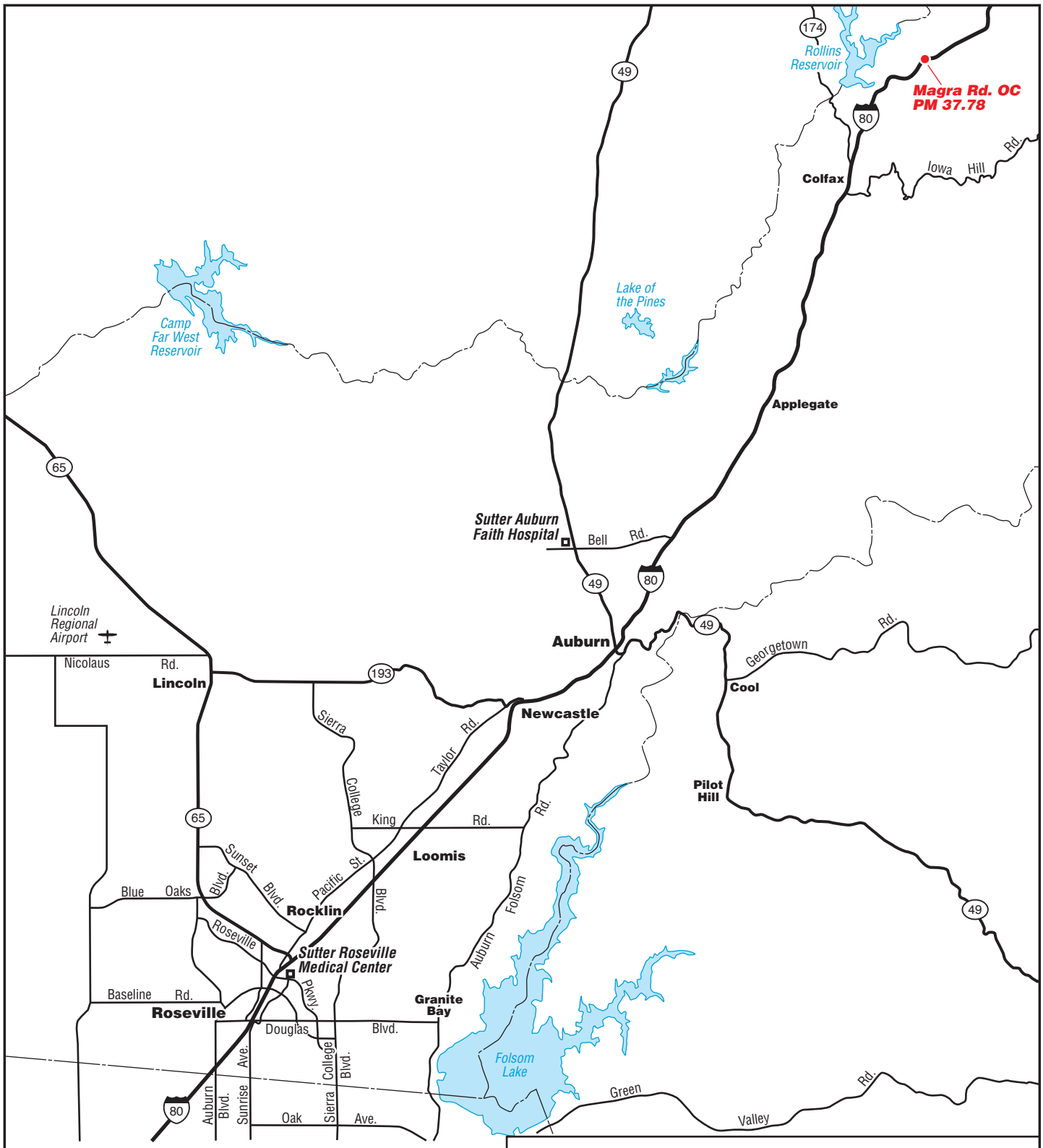

GEOCON CONSULTANTS, INC.

3160 GOLD VALLEY DR – SUITE 800 – RANCHO CORDOVA, CA 95742
PHONE 916.852.9118 – FAX 916.852.9132

Magra Road OC (Br. No. 19-0092)
03-PLA-80, Post Mile 37.78

Placer County, CA	**VICINITY MAP**
GEOCON Proj. No. S9300-06-186	
TO# 186, EA 03-3E1001	April 2012 — Figure 1

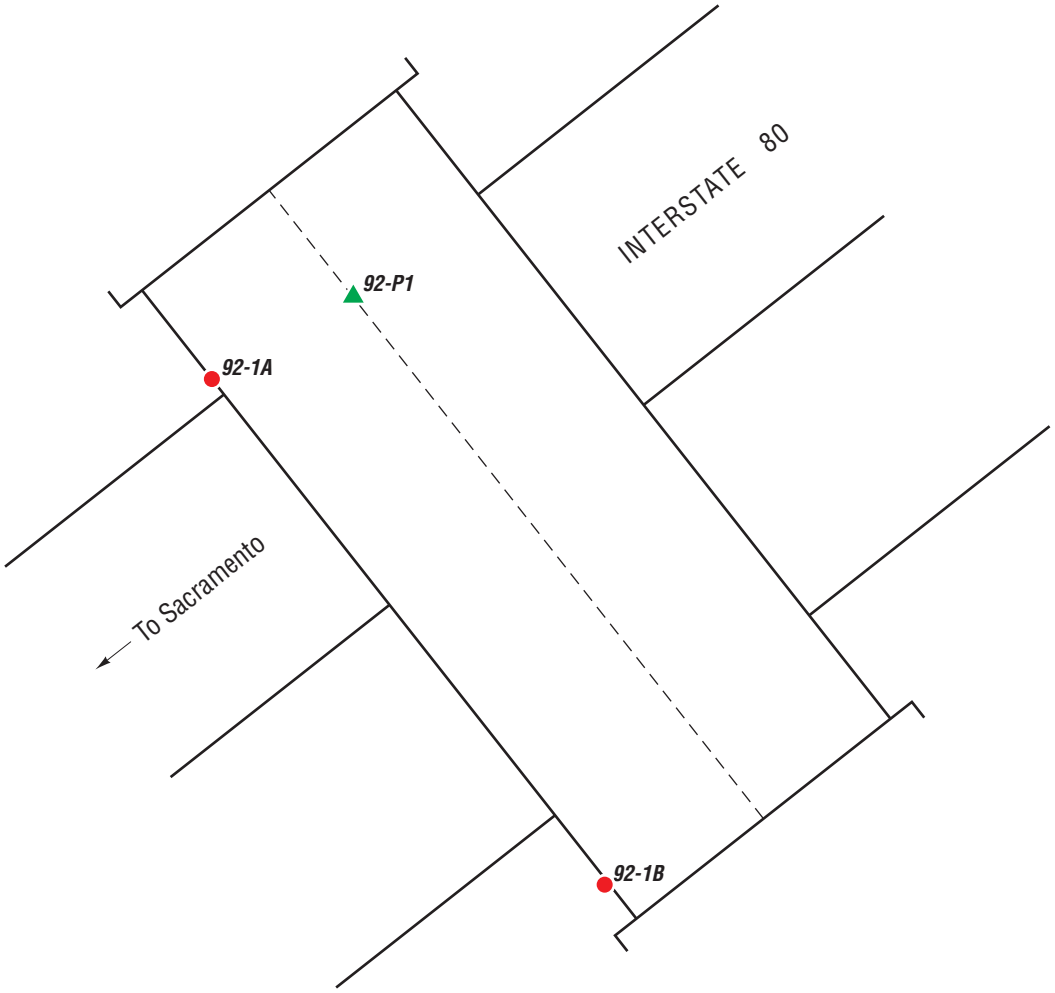

MAGRA ROAD OC
(BR. NO. 19-0092)

N

NOT TO SCALE

LEGEND:

- Approximate Asbestos Sample Location
- Approximate Paint Sample Location

GEOCON
CONSULTANTS, INC.
3160 GOLD VALLEY DR – SUITE 800 – RANCHO CORDOVA, CA 95742
PHONE 916.852.9118 – FAX 916.852.9132

Magra Road OC (Br. No. 19-0092)
03-PLA-80, Post Mile 37.78

Placer County, CA	**SITE PLAN**	
GEOCON Proj. No. S9300-06-186		
TO# 186, EA 03-3E1001	April 2012	Figure 2

Photo 1 – Magra Road OC (Br. No. 19-0092) in Placer County, CA

Photo 2 – Br. No. 19-0092 abutment expansion joint fill material

Photo 3 – Br. No. 19-0092 yellow traffic striping

GEOCON
CONSULTANTS, INC.
3160 GOLD VALLEY DR – SUITE 800 – RANCHO CORDOVA, CA 95742
PHONE 916.852.9118 – FAX 916.852.9132

PHOTOGRAPHS 1, 2, AND 3		
Magra Road OC (Br. No. 19-0092) 03-PLA-80 PM 37.78		
S9300-06-186	TO #186	April 2012

Photo 4 – Br. No. 19-0092 typical abutment joint (non-suspect)

Photo 5 – Br. No. 19-0092 bearings (non-suspect)

EMSL Analytical, Inc
2235 Polvorosa Ave , Suite 230, San Leandro, CA 94577
Phone/Fax: (510) 895-3675 / (510) 895-3680
http://www.emsl.com sanleandrolab@emsl.com

EMSL Order:	091203751
CustomerID:	GCNV25
CustomerPO:	S9300-06-186
ProjectID:	S9300-06-**

Attn: **Chris Giuntoli**
Geocon Consultants, Inc.
4010 Technology Way Ste D
Carson City, NV 89706

Phone:	(775) 888-9900
Fax:	(775) 888-9904
Received:	03/26/12 8:15 AM
Analysis Date:	3/28/2012
Collected:	3/23/2012

Project: **S9300-06-186**

Test Report: Asbestos Analysis of Bulk Materials via EPA 600/R-93/116 and/or EPA 600/M4-82-020 Method(s) using Polarized Light Microscopy

			Non-Asbestos				Asbestos
Sample	**Description**	**Appearance**	**%**	**Fibrous**	**%**	**Non-Fibrous**	**% Type**
92-1A-Expansion Joint Fill Material *091203751-0001*	EXPANSION JOINT FILL MATERIAL	Brown Fibrous Homogeneous	85%	Cellulose	15%	Non-fibrous (other)	**None Detected**
92-1B-Expansion Joint Fill Material *091203751-0002*	EXPANSION JOINT FILL MATERIAL	Brown Fibrous Homogeneous	85%	Cellulose	15%	Non-fibrous (other)	**None Detected**
92-2A-Paint *091203751-0003*	YELLOW PAINT	Yellow Non-Fibrous Homogeneous			100%	Non-fibrous (other)	**None Detected**
92-2A-Mastic *091203751-0003A*	YELLOW PAINT	Black Non-Fibrous Homogeneous			100%	Non-fibrous (other)	**None Detected**
92-2B-Paint *091203751-0004*	YELLOW PAINT	Yellow Non-Fibrous Heterogeneous			100%	Non-fibrous (other)	**None Detected**
92-2B-Mastic *091203751-0004A*	YELLOW PAINT	Black Non-Fibrous Heterogeneous			100%	Non-fibrous (other)	**None Detected**

Analyst(s)
Matthew Batongbacal (6)

Baojia Ke, Laboratory Manager
or other approved signatory

EMSL maintains liability limited to cost of analysis. This report relates only to the samples reported and may not be reproduced, except in full, without written approval by EMSL. EMSL bears no responsibility for sample collection activities or analytical method limitations. Interpretation and use of test results are the responsibility of the client. This report must not be used by the client to claim product certification, approval, or endorsement by NVLAP, NIST or any agency of the federal government. Non-friable organically bound materials present a problem matrix and therefore EMSL recommends gravimetric reduction prior to analysis. Samples received in good condition unless otherwise noted. Estimated accuracy, precision and uncertainty data available upon request. Unless requested by the client, building materials manufactured with multiple layers (i.e. linoleum, wallboard, etc.) are reported as a single sample. None Detected = <1%
Samples analyzed by EMSL Analytical, Inc San Leandro, CA NVLAP Lab Code 101048-3, MA AA000201, WA C2007

Initial report from 03/28/2012 11:38:51

THIS IS THE LAST PAGE OF THE REPORT.

091203751

EMSL ANALYTICAL, INC.
LABORATORY • PRODUCTS • TRAINING

Asbestos Chain of Custody

EMSL Order Number (*Lab Use Only*): 091203751

EMSL ANALYTICAL, INC.
2235 POLVOROSA DR., STE. 230
SAN LEANDRO, CA 94577
PHONE: (510) 895-3675
FAX: (510) 895-3680

Company : GEOCON	EMSL-Bill to: ☒ Same ☐ Different If Bill to is Different note instructions in Comments**
Street: 4010 TECHNOLOGY DR, D	*Third Party Billing requires written authorization from third party*
City: CARSON CITY State/Province: NV	Zip/Postal Code: 89706 Country:
Report To (Name): CHRIS GIUNTOLI	Fax #:
Telephone #: 775-888-9900	Email Address: GIUNTOLI@GEOCONINC.COM
Project Name/Number:	
Please Provide Results: ☐ Fax ☐ Email Purchase Order:	U.S. State Samples Taken:

Turnaround Time (TAT) Options* – Please Check

☐ 3 Hour ☐ 6 Hour ☐ 24 Hour ☐ 48 Hour ☐ 72 Hour ☐ 96 Hour ☒ 1 Week ☐ 2 Week

*For TEM Air 3 hours/6 hours, please call ahead to schedule.*There is a premium charge for 3 Hour TEM AHERA or EPA Level II TAT. You will be asked to sign an authorization form for this service. Analysis completed in accordance with EMSL's Terms and Conditions located in the Analytical Price Guide.

PCM - Air
- ☐ NIOSH 7400
- ☐ w/ OSHA 8hr. TWA

PLM - Bulk (reporting limit)
- ☒ PLM EPA 600/R-93/116 (<1%)
- ☐ PLM EPA NOB (<1%)

Point Count
- ☐ 400 (<0.25%) ☐ 1000 (<0.1%)

Point Count w/Gravimetric
- ☐ 400 (<0.25%) ☐ 1000 (<0.1%)
- ☐ NYS 198.1 (friable in NY)
- ☐ NYS 198.6 NOB (non-friable-NY)
- ☐ NIOSH 9002 (<1%)

TEM – Air ☐ **4-4.5hr TAT (AHERA only)**
- ☐ AHERA 40 CFR, Part 763
- ☐ NIOSH 7402
- ☐ EPA Level II
- ☐ ISO 10312

TEM - Bulk
- ☐ TEM EPA NOB
- ☐ NYS NOB 198.4 (non-friable-NY)
- ☐ Chatfield SOP
- ☐ TEM Mass Analysis-EPA 600 sec. 2.5

TEM – Water: EPA 100.2
- Fibers >10µm ☐ Waste ☐ Drinking
- All Fiber Sizes ☐ Waste ☐ Drinking

TEM- Dust
- ☐ Microvac - ASTM D 5755
- ☐ Wipe - ASTM D6480
- ☐ Carpet Sonication (EPA 600/J-93/167)

Soil/Rock/Vermiculite
- ☐ PLM CARB 435 - A (0.25% sensitivity)
- ☐ PLM CARB 435 - B (0.1% sensitivity)
- ☐ TEM CARB 435 - B (0.1% sensitivity)
- ☐ TEM CARB 435 - C (0.01% sensitivity)
- ☐ EPA Protocol (Semi-Quantitative)
- ☐ EPA Protocol (Quantitative)

Other:
- ☐

☐ **Check For Positive Stop – Clearly Identify Homogenous Group**

Samplers Name: CHRIS GIUNTOLI **Samplers Signature:** [signature]

Sample #	Sample Description	Volume/Area (Air) HA # (Bulk)	Date/Time Sampled
92-1A	EXPANSION JOINT FILL MATERIAL		3/23/12
92-1B	↓		↓
92-2A	YELLOW PAINT		↓
92-2B	↓		↓

Client Sample # (s): **Total # of Samples:** 4

Relinquished (Client): [signature] **Date:** 3/24/12 **Time:** 1600

Received (Lab): [signature] **Date:** RECEIVED MAR 26 2012 **Time:** 0815 F.X

Comments/Special Instructions:
SEPARATE LAB REPORT

ADVANCED TECHNOLOGY LABORATORIES

April 03, 2012

ELAP No.: 1838
NELAP No.: 02107CA
CSDLAC No.: 10196
ORELAP No.: CA300003

Chris Giuntoli
Geocon Consultants, Inc.
4010 Technology Way, Suite D
Carson City, NV 89706
Tel: (775) 888-9900
Fax:(775) 888-9904

Re: ATL Work Order Number : 1201087
Client Reference : I-80 BRIDGES, S9300-06-186

Enclosed are the results for sample(s) received on March 27, 2012 by Advanced Technology Laboratories. The sample(s) are tested for the parameters as indicated on the enclosed chain of custody in accordance with applicable laboratory certifications. The laboratory results contained in this report specifically pertains to the sample(s) submitted.

Thank you for the opportunity to serve the needs of your company. If you have any questions, please feel free to contact me or your Project Manager.

Sincerely,

Eddie Rodriguez
Laboratory Director

The cover letter and the case narrative are an integral part of this analytical report and its absence renders the report invalid. The report cannot be reproduced without written permission from the client and Advanced Technology Laboratories.

Geocon Consultants, Inc.		Project Number :	I-80 BRIDGES, S9300-06-186
4010 Technology Way, Suite D		Report To :	Chris Giuntoli
Carson City , NV 89706		Reported :	04/03/2012

SUMMARY OF SAMPLES

Sample ID	Laboratory ID	Matrix	Date Sampled	Date Received
92-P1	1201087-01	Paint Chips	3/23/12 0:00	3/27/12 9:19

Geocon Consultants, Inc.		Project Number :	I-80 BRIDGES, S9300-06-186
4010 Technology Way, Suite D		Report To :	Chris Giuntoli
Carson City , NV 89706		Reported :	04/03/2012

Total Metals by ICP-AES EPA 6010B

Analyte: Lead **Analyst: KK/HF**

Laboratory ID	Client Sample ID	Result	Units	PQL	MDL	Dilution	Batch	Prepared	Date/Time Analyzed	Notes
1201087-01	92-P1	**4.1**	mg/kg	2.0	NA	1	B2C0768	03/28/2012	03/28/12 15:47	

Geocon Consultants, Inc.	Project Number : I-80 BRIDGES, S9300-06-186
4010 Technology Way, Suite D	Report To : Chris Giuntoli
Carson City , NV 89706	Reported : 04/03/2012

QUALITY CONTROL SECTION

Total Metals by ICP-AES EPA 6010B - Quality Control

Analyte	Result (mg/kg)	PQL (mg/kg)	Spike Level	Source Result	% Rec	% Rec Limits	RPD	RPD Limit	Notes
Batch B2C0768 - EPA 3050B									
Blank (B2C0768-BLK1)					Prepared: 3/28/2012 Analyzed: 3/28/2012				
Lead	ND	1.0			NR				
LCS (B2C0768-BS1)					Prepared: 3/28/2012 Analyzed: 3/28/2012				
Lead	47	1.0	50.0		93.5	80 - 120			
Duplicate (B2C0768-DUP1)		**Source: 1201089-01**			Prepared: 3/28/2012 Analyzed: 3/28/2012				
Lead	14	2.0		15	NR		7.28	20	
Matrix Spike (B2C0768-MS1)		**Source: 1201119-07**			Prepared: 3/28/2012 Analyzed: 3/28/2012				
Lead	110	1.0	125	10	83.2	46 - 116			
Matrix Spike Dup (B2C0768-MSD1)		**Source: 1201119-07**			Prepared: 3/28/2012 Analyzed: 3/28/2012				
Lead	110	1.0	125	10	79.9	46 - 116	3.71	20	

Geocon Consultants, Inc.		Project Number :	I-80 BRIDGES, S9300-06-186
4010 Technology Way, Suite D		Report To :	Chris Giuntoli
Carson City , NV 89706		Reported :	04/03/2012

Notes and Definitions

ND	Analyte not detected at or above reporting limit
PQL	Practical Quantitation Limit
MDL	Method Detection Limit
NR	Not Reported
RPD	Relative Percent Difference

CHAIN OF CUSTODY RECORD

Advanced Technology Laboratories
3275 Walnut Avenue
Signal Hill, CA 90755
(562) 989-4045 • Fax (562) 989-4040

FOR LABORATORY USE ONLY:

P.O.#:

Logged By: Date: 3/27/12

Method of Transport: Client ☐ ATL ☐ CA OverN ☐ FEDEX ☐ Other: GSO

Sample Condition Upon Receipt:
1. CHILLED Y☐ N☑
2. HEADSPACE (VOA) Y☐ N☐
3. CONTAINER INTACT Y☐ N☐
4. SEALED Y☐ N☐
5. # OF SPLS MATCH COC Y☐ N☐
6. PRESERVED Y☐ N☐

Client: GECON
Attn: CHRIS GIUNTOLI
Address: 4010 TECHNOLOGY WAY, SUITE D
City CARSON CITY State NV Zip Code 89706
TEL: (775) 888-9800
FAX: ( )

Project Name: I-80 BRIDGES
Project #: 39300-06-186
Sampler: (Printed Name) CHRIS GIUNTOLI (Signature)

Relinquished by: (Signature and Printed Name)	Date:	Time:	Received by: (Signature and Printed Name)	Date:	Time:
	3/26/12	1200		3/27/12	9:19

I hereby authorize ATL to perform the work indicated below:
Project Mgr /Submitter: CHRIS GIUNTOLI 3/23/12
Print Name Date
Signature

Send Report To: Attn: SAME Co: Address City State Zip

Bill To: Attn: SAME Co: Address City State Zip

Special Instructions/Comments:
*SOLUBLE LEAD MAY BE REQUESTED BASED ON TOTAL LEAD RESULTS

Sample/Records - Archival & Disposal
Unless otherwise requested by client, all samples will be disposed 45 days after receipt and records will be disposed 1 year after submittal of final report.

Storage Fees (applies when storage is requested):
- Sample : $2.00 / sample / mo (after 45 days)
- Records : $1.00 / ATL workorder / mo (after 1 year)

Circle or Add Analysis(es) Requested

SPECIFY APPROPRIATE MATRIX

QA/QC: RTNE ☐ CT ☐ SWRCB ☐ Logcode ____ OTHER ____

ITEM	LAB USE ONLY: Batch #: / Lab No.	Sample Description: Sample I.D. / Location	Date	Time	8081A (Pesticides)	8082 (PCB)	8260B (Volatiles)	8270C (BNA)	6010B (Total Metal)	8015B (GRO) / BTEX	8015B (DRO)	TOTAL LEAD*	SOIL	WATER	GROUND WATER	WASTEWATER	PAINT CHIPS	TAT	Container(s) #	Container(s) Type	PRESERVATION	REMARKS
	1201087-01	92-P1	3/23/12									X					X	5-DAY	1	P B		

• TAT starts 8 a.m. following day if samples received after 3 p.m.

TAT: A= Overnight ≤ 24 hr B= Emergency Next workday C= Critical 2 Workdays D= Urgent 3 Workdays E= Routine 7 Workdays

Container Types: T=Tube V=VOA L=Liter P=Pint J=Jar B=Tedlar G=Glass P=Plastic M=Metal

Preservatives: H=Hcl N=HNO_3 S=H_2SO_4 C=4°C Z=$Zn(AC)_2$ O=NaOH T=$Na_2S_2O_3$

GEOCON
CONSULTANTS, INC.
GEOTECHNICAL ■ ENVIRONMENTAL ■ MATERIALS

Project No. S9300-06-105
December 17, 2009

Mr. Rajive Chadha
California Department of Transportation - District 3
Environmental Engineering Office
P.O. Box 911
Marysville, California 95901

Subject: INTERSTATE 80 (03-PLA-80) POST MILE 31.8 TO 39.0
PLACER COUNTY, CALIFORNIA
CONTRACT NO. 03A1368, TASK ORDER NO. 105, EA 03-1A7900
ASBESTOS SURVEY REPORT

Dear Mr. Chadha:

In accordance with California Department of Transportation Contract No. 03A1368 and Task Order No. 105, we have performed an asbestos survey of the subject bridges in Placer County, California. The scope of services included surveying two bridges for suspect asbestos-containing materials, collecting bulk samples, and submitting the samples to a laboratory for analysis.

The accompanying report summarizes the services performed and laboratory analysis.

The contents of this report reflect the views of Geocon Consultants, Inc., who are responsible for the facts and accuracy of the data presented herein. The contents do not necessarily reflect the official views or policies of the State of California or the Federal Highway Administration. This report does not constitute a standard, specification, or regulation.

Please contact us if you have questions concerning the contents of this report or if we may be of further service.

Sincerely,

GEOCON CONSULTANTS, INC.

Chris Giuntoli, CAC
Senior Project Scientist

John E. Juhrend, PE, CEG
Project Manager

REGISTERED PROFESSIONAL ENGINEER
JOHN JUHREND
No. 46681
Exp. 06/30/11
CIVIL
STATE OF CALIFORNIA

CGG:JEJ:krh

(5 + 3 CDs) Addressee

TABLE OF CONTENTS

ASBESTOS SURVEY REPORT Page

1.0 INTRODUCTION 1
1.1 Project Description 1
1.2 General Objectives 1

2.0 BACKGROUND 1
2.1 Asbestos 1
2.2 Architectural Drawings and Previous Survey Activities 2

3.0 SCOPE OF SERVICES 2

4.0 INVESTIGATIVE RESULTS 3

5.0 RECOMMENDATIONS 3

6.0 REPORT LIMITATIONS 3

FIGURES
1. Vicinity Map
2-1. Site Plan – Alpine OC, Bridge #19-0070
2-2. Site Plan – Magra OC, Bridge #19-0092

PHOTOGRAPHS (1 through 13)

TABLE
1. Summary of Asbestos Analytical Results

APPENDIX
A. Analytical Laboratory Report and Chain-of-custody Documentation

ASBESTOS SURVEY REPORT

1.0 INTRODUCTION

This asbestos survey report was prepared by Geocon Consultants, Inc. under Caltrans Contract No. 3A1368, Task Order No. 105 (TO-105).

1.1 Project Description

The project consists of the Alpine Overcrossing (OC) (Bridge 19-0070) and the Magra OC (Bridge 19-0092) on State Route 80 (SR-80) in Placer County, California. Caltrans proposes to demolish the bridges. We performed an asbestos survey at the project location. The project location is depicted on the Vicinity Map, Figure 1, and Site Plans, Figures 2-1 and 2-2.

1.2 General Objectives

The purpose of the scope of services outlined in TO-105 was to determine the presence and quantity of asbestos at the project location prior to interchange improvement activities. The information obtained from this investigation will be used by Caltrans for waste profiling, determining California Occupational Safety and Health Administration (Cal/OSHA) applicability, and coordinating asbestos disturbance activities.

2.0 BACKGROUND

2.1 Asbestos

The *Code of Federal Regulations (CFR)*, 40 CFR 61, Subpart M, National Emissions Standards for Hazardous Air Pollutants (NESHAP) and Federal Occupational Safety and Health Administration (FED OSHA) classify asbestos-containing material (ACM) as any material or product that contains *greater than* 1% asbestos. Nonfriable ACM is classified by NESHAP as either Category I or Category II material defined as follows:

- **Category I** – asbestos-containing packings, gaskets, resilient floor coverings, and asphalt roofing products.
- **Category II** – all remaining types of nonfriable asbestos-containing material not included in Category I that when dry, cannot be crumbled, pulverized, or reduced to powder by hand pressure.

Regulated asbestos-containing material (RACM), a hazardous waste when friable, is classified as any manufactured material that contains *greater than* 1% asbestos by dry weight *and* is:

- Friable (can be crumbled, pulverized, or reduced to powder by hand pressure); or
- Category I material that has become friable; or

- Category I material that has been subjected to sanding grinding, cutting or abrading; or
- Category II nonfriable material that has a high probability of becoming crumbled, pulverized, or reduced to a powder during demolition or renovation activities.

Activities that disturb materials containing *any* amount of asbestos are subject to certain requirements of the Cal/OSHA asbestos standard contained in Title 8, CCR Section 1529. Typically, removal or disturbance of more than 100 square feet of material containing more than 0.1% asbestos must be performed by a registered asbestos abatement contractor, but associated waste labeling is not required if the material contains 1% or less asbestos. When the asbestos content of a material exceeds 1%, virtually all requirements of the standard become effective.

Materials containing more than 1% asbestos are also subject to NESHAP regulations (40 CFR Part 61, Subpart M). RACM (friable ACM and nonfriable ACM that will become friable during demolition operations) must be removed from structures prior to demolition. Certain nonfriable ACM and materials containing 1% or less asbestos may remain in structures during demolition; however, there are waste handling/disposal issues and Cal/OSHA work requirements that may make it cost ineffective to do so. Contractors are responsible for segregating and characterizing waste streams prior to disposal.

With respect to potential worker exposure, notification, and registration requirements, Cal/OSHA defines asbestos-containing construction material (ACCM) as construction material that contains more than 0.1% asbestos (Title 8, CCR 341.6).

2.2 Architectural Drawings and Previous Survey Activities

Architectural drawings or previous survey reports for the project were not available for our review.

3.0 SCOPE OF SERVICES

Mr. Joshua Goodwin, a California-Certified Asbestos Consultant (CAC), certification No. 05-3754 (expiration June 16, 2010), performed the asbestos survey at the project location on October 28, 2009.

Suspect ACM were grouped into homogeneous areas with representative samples randomly collected from each. In addition, each potential ACM was evaluated for friability. A total of four bulk asbestos samples representing two suspect materials were collected.

Our procedures for inspection and sampling in accordance with TO-105 are discussed below:

- Collected bulk asbestos samples after first wetting friable material with a light mist of water. The samples were then cut from the substrate and transferred to a labeled container. Note that when multiple samples were collected, the sampling locations were distributed throughout the homogeneous area (spaces where the material was observed).

- Relinquished bulk asbestos samples to EMSL Analytical, Inc., a California-licensed and Caltrans-approved subcontractor, for asbestos analysis in accordance with United States Environmental Protection Agency (EPA) Test Method 600/R-93/116 using polarized light microscopy (PLM) under chain-of-custody protocol. EMSL Analytical, Inc. is a laboratory accredited by the National Institute of Standards and Technology National Voluntary Laboratory Accreditation Program (NIST-NVLAP) for bulk asbestos fiber analysis. The laboratory analyses were requested on a 10-workday turn-around-time.

Sample group identification numbers, material descriptions, approximate quantities, friability assessments, and photo references are summarized in Table 1. Approximate sample locations are presented on Figures 2-1 and 2-2. Materials represented by the samples collected are shown in the attached photographs.

4.0 INVESTIGATIVE RESULTS

No asbestos was detected in samples of the suspect materials collected during our survey. A summary of the analytical laboratory test results for asbestos is presented in Table 1. Reproductions of the laboratory report and chain-of-custody documentation are presented in Appendix A.

5.0 RECOMMENDATIONS

Since asbestos was not detected in samples of suspect asbestos-containing materials collected during our survey, the Cal/OSHA asbestos standard does not apply for planned bridge demolition activities at the project location. In addition, debris from planned demolition activities would not be considered as a California hazardous waste based on asbestos content.

Written notification to U.S. EPA Region IX and the California Air Resources Board is required ten working days prior to commencement of *any* demolition activity (whether asbestos is present or not).

6.0 REPORT LIMITATIONS

This asbestos survey was conducted in conformance with generally accepted standards of practice for identifying and evaluating asbestos in structures. The survey addressed only those structures identified in Section 1.1. Due to the nature of structure surveys, asbestos use, and laboratory analytical limitations, some ACM at the project location may not have been identified. Spaces such as cavities, voids, crawlspaces, and pipe chases may have been concealed to our investigator. Previous renovation work may have concealed or covered spaces or materials or may have partially demolished materials and left debris in inaccessible areas. Additionally, renovation activities may have partially replaced ACM with indistinguishable non-ACM. Asbestos may exist in areas of the structures that were not accessible or sampled in conjunction with this TO.

During renovation or demolition operations, suspect materials may be uncovered which are different from those accessible for sampling during this assessment. Personnel in charge of renovation/demolition should be alerted to note materials uncovered during such activities that differ substantially from those included in this or previous assessment reports. If suspect ACM are found, additional sampling and analysis should be performed to determine if the materials contain asbestos.

This report has been prepared exclusively for Caltrans. The information contained herein is only valid as of the date of the report and will require an update to reflect additional information obtained.

This report is not a comprehensive site characterization and should not be construed as such. The findings as presented in this report are predicated on the results of the limited sampling and laboratory testing performed. In addition, the information obtained is not intended to address potential impacts related to sources other than those specified herein. Therefore, the report should be deemed conclusive with respect to only the information obtained. We make no warranty, express or implied, with respect to the content of this report or any subsequent reports, correspondence or consultation. Geocon strived to perform the services summarized herein in accordance with the local standard of care in the geographic region at the time the services were rendered.

The contents of this report reflect the views of the author who is responsible for the facts and accuracy of the data presented herein. The contents do not necessarily reflect the official views or policies of the State of California or the Federal Highway Administration. This report does not constitute a standard, specification or regulation.

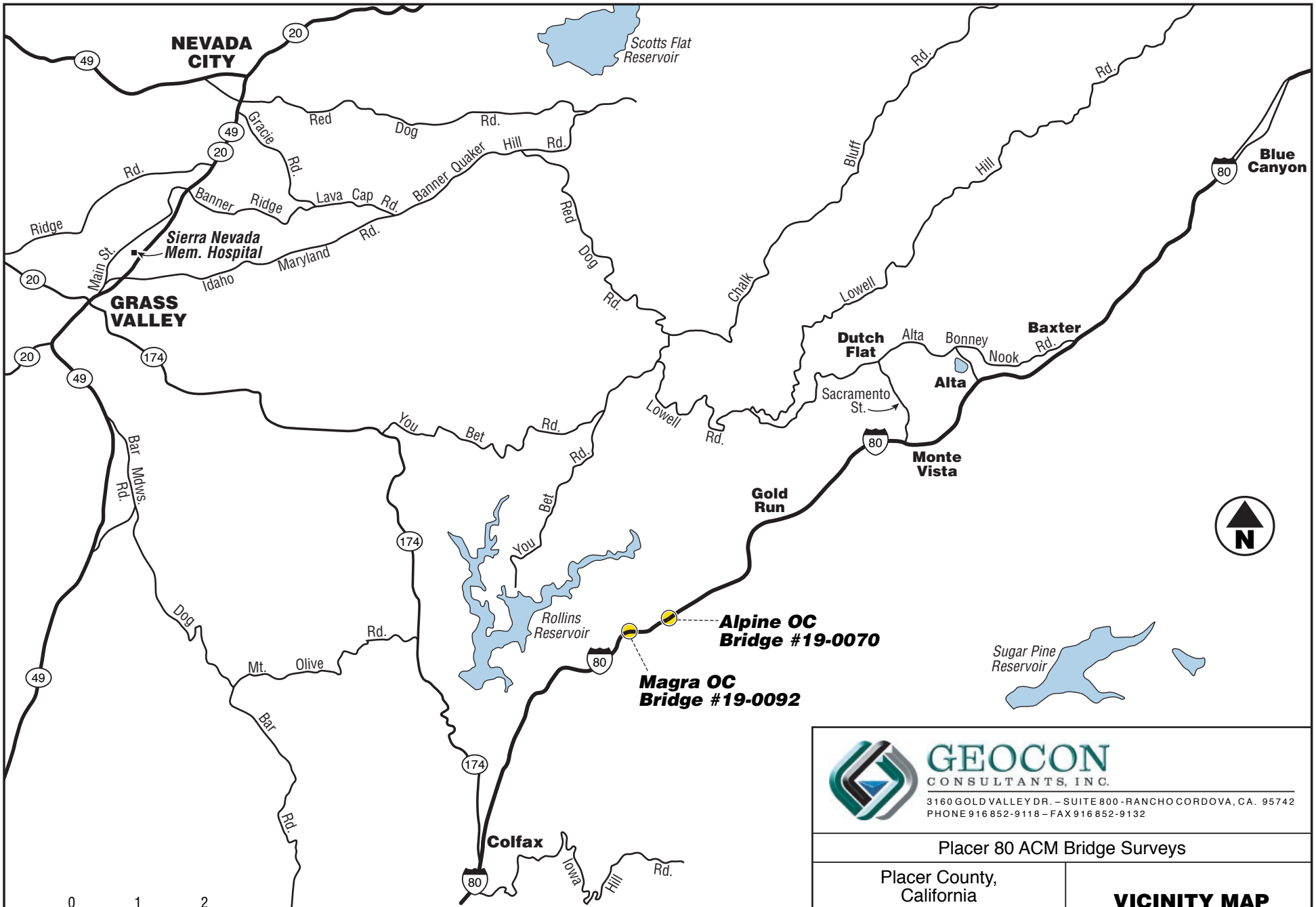

GEOCON CONSULTANTS, INC.
3160 GOLD VALLEY DR. – SUITE 800 - RANCHO CORDOVA, CA. 95742
PHONE 916 852-9118 – FAX 916 852-9132

Placer 80 ACM Bridge Surveys

Placer County, California

VICINITY MAP

GEOCON Proj. No. S9300-06-105

Task Order No. 105 | December 2009 | Figure 1

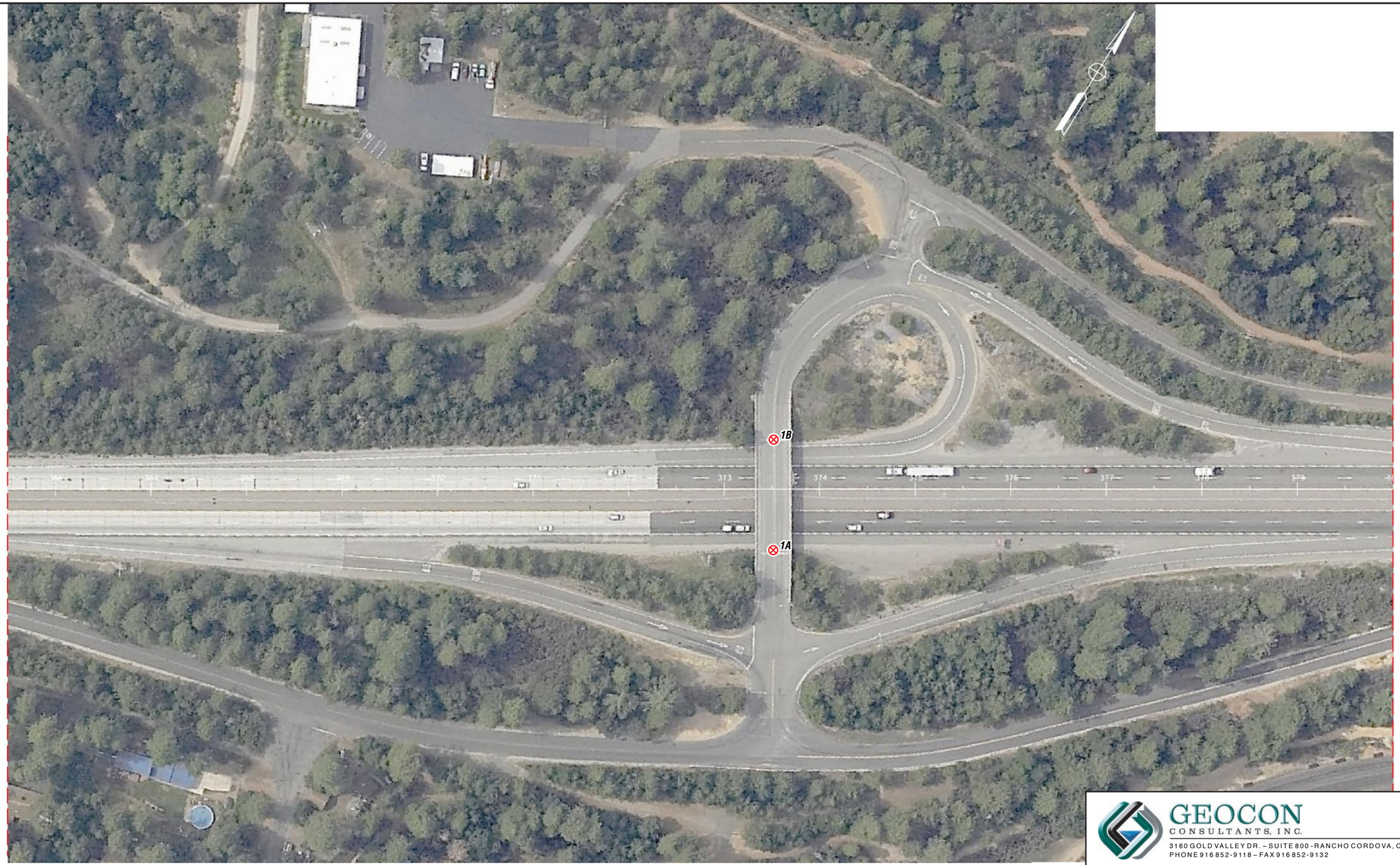

LEGEND:

1A ⊗ Approximate Sample Location

0 100
Scale in Feet

GEOCON
CONSULTANTS, INC.
3160 GOLD VALLEY DR. – SUITE 800 - RANCHO CORDOVA, CA. 95742
PHONE 916 852-9118 – FAX 916 852-9132

Placer 80 ACM Bridge Surveys

Placer County, California	**SITE PLAN** **Alpine OC** **Bridge #19-0070**
GEOCON Proj. No. S9300-06-105	
Task Order No. 105	December 2009 — Figure 2-1

LEGEND:

1A ⊗ Approximate Sample Location

0 150
Scale in Feet

GEOCON
CONSULTANTS, INC.
3160 GOLD VALLEY DR. – SUITE 800 - RANCHO CORDOVA, CA. 95742
PHONE 916 852-9118 – FAX 916 852-9132

Placer 80 ACM Bridge Surveys		
Placer County, California	**SITE PLAN** **Magra OC Bridge #19-0092**	
GEOCON Proj. No. S9300-06-105		
Task Order No. 105	December 2009	Figure 2-2

Photo 1 –Bridge 19-0070 (Alpine Overcrossing) on Highway 80 in Placer County, California

Photo 2 – Bridge 19-0070 typical deck joint material (non suspect)

Photo 3 – Bridge 19-0070 brown fiberboard

GEOCON
CONSULTANTS, INC.
3160 GOLD VALLEY DR – SUITE 800 – RANCHO CORDOVA, CA 95742
PHONE 916.852.9118 – FAX 916.852.9132

PHOTOGRAPHS 1, 2, & 3		
Placer 80 – ACM Bridge Surveys Placer County, California		
S9300-06-105	Task Order No. 105	December 2009

Photo 4 –Bridge 19-0070 abutment underside

Photo 5 – Bridge 19-0070 deck underside

Photo 6 – Bridge 19-0070 deck and sidewalk

Photo 7 –Bridge 19-0092 (Magra Overcrossing) on Highway 80 in Placer County, California

Photo 8 – Bridge 19-0092 deck joint (non suspect)

Photo 9 – Bridge 19-0092 brown fiberboard

Photo 10 –Bridge 19-0092 abutment bearing (non suspect)

Photo 11 – Bridge 19-0092 deck underside

Photo 12 –Bridge 19-0092 pedestrian walkway railing (non suspect)

Photo 13 –Bridge 19-0092 conduits under deck (non suspect)

TABLE 1
SUMMARY OF ASBESTOS ANALYTICAL RESULTS
PLACER 80 ACM BRIDGE SURVEYS
CALTRANS CONTRACT 03A1638, TASK ORDER NO. 105, EA 03-1A7900
PLACER COUNTY, CALIFORNIA

Polarized Light Microscopy (PLM) - EPA Test Method 600/R-93/116

Bridge No.	Sample Group No.	Description of Material	Approximate Quantity	Friable	Site Photo	Asbestos Content
19-0070	1	Brown fiberboard	NA	NA	3	ND
19-0092	1	Brown fiberboard	NA	NA	9	ND

Notes:

NA = Not applicable (no asbestos detected)

ND = Not detected

APPENDIX A

EMSL Analytical, Inc
2235 Polvorosa Ave , Suite 230, San Leandro, CA 94577
Phone: (510) 895-3675 Fax: (510) 895-3680 Email: milpitaslab@emsl.com

Attn: **Josh Goodwin**
Geocon Consultants
3160 Gold Valley Drive
Suite 800
Rancho Cordova, CA 95742

Fax: (916) 852-9132 Phone: (916) 852-9118
Project: **S9300-06-105**

Customer ID: GECN80
Customer PO: S9300-06-105
Received: 10/30/09 10:00 AM
EMSL Order: 090908849

EMSL Proj: S9300-06-**
Analysis Date: 11/2/2009

Test Report: Asbestos Analysis of Bulk Materials via EPA 600/R-93/116 Method using Polarized Light Microscopy

			Non-Asbestos				Asbestos
Sample	**Description**	**Appearance**	**%**	**Fibrous**	**%**	**Non-Fibrous**	**% Type**
1A-Alpine OC *090908849-0001*	Alpine OC	Brown Fibrous Homogeneous	60%	Cellulose	40%	Non-fibrous (other)	**None Detected**
1B-Alpine OC *090908849-0002*	Alpine OC	Brown Fibrous Homogeneous	60%	Cellulose	40%	Non-fibrous (other)	**None Detected**
1A-Magra Rd. OC *090908849-0003*	Magra Rd., OC	Brown Fibrous Homogeneous	60%	Cellulose	40%	Non-fibrous (other)	**None Detected**
1B-Magra Rd. OC *090908849-0004*	Magra Rd., Oc	Brown Fibrous Homogeneous	60%	Cellulose	40%	Non-fibrous (other)	**None Detected**

Analyst(s)

Jorge Leon (4)

Baojia Ke, Laboratory Manager
or other approved signatory

Due to magnification limitations inherent in PLM, asbestos fibers in dimensions below the resolution capability of PLM may not be detected. Samples reported as <1% or none detected may require additional testing by TEM to confirm asbestos quantities. The above test report relates only to the items tested and may not be reproduced in any form without the express written approval of EMSL Analytical, Inc. EMSL's liability is limited to the cost of analysis. EMSL bears no responsibility for sample collection activities or analytical method limitations. Interpretation and use of test results are the responsibility of the client.Samples received in good condition unless otherwise noted.
Samples analyzed by EMSL Analytical, Inc San Leandro 2235 Polvorosa Ave , Suite 230, San Leandro CA NVLAP Lab Code 101048-3, MA AA000201, WA C2007

THIS IS THE LAST PAGE OF THE REPORT.

Chain of Custody

Asbestos Lab Services

EMSL Analytical, Inc.
Suite 230
2235 Polvorosa Ave
San Leandro,
CA 94577
Phone: (510) 895-3675 (888) 455-3675
Fax: (510) 895-3680
http://www.emsl.com

Please print all information legibly.

Company:	Geocon Consultants, Inc.	***Bill To:***	Geocon Consultants, Inc.
Address1:	3160 Gold Valley Drive, Suite 800	*Address1:*	3160 Gold Valley Drive, Suite 800
Address2:		*Address2:*	
City, State:	Rancho Cordova, CA	*City, State:*	Rancho Cordova, CA
Zip/Post Code:	~~95683~~ 95742	*Zip/Post Code:*	~~95683~~ 95742
Country:	USA	*Country:*	USA
Contact Name:	Josh Goodwin / Chris Giuntoli	***Attn:***	Josh Goodwin / Chris Giuntoli
Phone:	916-852-9118	*Phone:*	916-852-9118
Fax:		*Fax:*	
Email:	goodwin@geoconinc.com	*Email:*	goodwin@geoconinc.com
EMSL Rep:	Daniel Kocher	***P.O. Number:***	
Project Name/Number:	S9300-06-105		

MATRIX			TURNAROUND			
☐ Air	☐ Soil	☐ Micro-Vac	☐ 3 Hours	☐ 6 Hours		☐ 24 Hours (1 day)
☑ Bulk	☐ Drinking Water		☐ 48 Hours (2 days)	☐ 72 Hours (3 days)	☐ 96 Hours (4 days)	☑ 120 Hours (5 days)
☐ Wipe	☐ Wastewater		☐ 144+ hours (6-10 days)			

TEM AIR, 3 hours, 6 hours, Please call ahead to schedule. There is a premium charge for 3-hour tat, please call 1-800-220-3675 for price prior to sending samples. You will be asked to sign an authorization form for this service.

PCM - Air
- ☐ NIOSH 7400(A) Issue 2: August 1994
- ☐ OSHA w/TWA
- ☐ Other:

PLM - Bulk
- ☑ EPA 600/R-93/116
- ☐ EPA Point Count
- ☐ NY Stratified Point Count
- ☐ PLM NOB (Gravimetric) NYS 198.1
- ☐ NIOSH 9002:
- ☐ EMSL Standard Addition:

SEM Air or Bulk
- ☐ Qualitative
- ☐ Quantitative

TEM Air
- ☐ AHERA 40 CFR, Part 763 Subpart E
- ☐ NIOSH 7402
- ☐ EPA Level II

TEM BULK
- ☐ Drop Mount (Qualitative)
- ☐ Chatfield SOP - 1988-02
- ☐ TEM NOB (Gravimetric) NYS 198.4
- ☐ EMSL Standard Addition:

PLM Soil
- ☐ EPA Protocol Qualitative
- ☐ EPA Protocol Quantitative
- ☐ EMSL MSD 9000 Method fibers/gram

TEM WATER
- ☐ EPA 100.1
- ☐ EPA 100.2
- ☐ NYS 198.2

TEM Microvac/Wipe
- ☐ ASTM D 5755-95 (quantative method)
- ☐ Wipe Qualitative

XRD
- ☐ Asbestos
- ☐ Silica NIOSH 7500

OTHER
- ☐

090908849

Chain of Custody

Asbestos Lab Services

EMSL Analytical, Inc.
Suite 230
2235 Polvorosa Ave
San Leandro,
CA 94577
Phone: (510) 895-3675 (888) 455-3675
Fax: (510) 895-3680
http://www.emsl.com

Please print all information legibly.

Client Sample # (s) 1A - 1B **Total Samples #:** 4

Relinquished: Josh Goodwin **Date:** 10/29/09 **Time:** 1600

Received: Cathy Guahi **Date:** 10/30/09 **Time:** 10.00 AM (UPS)

Relinquished: **Date:** **Time:**

Received: **Date:** **Time:**

SAMPLE NUMBER	SAMPLE DESCRIPTION/LOCATION	~~VOLUME (if applicable)~~ TIME
1A	ALPINE OC	1405
1B	ALPINE OC	1415
1A	MAGRA RD OC	1510
1B	MAGRA RD OC	1518

Project No. S9300-06-186
April 30, 2012

Alicia Beyer, Task Order Manager
Caltrans District 3
Environmental Engineering Office
703 B Street
Marysville, CA 95901

Subject: ASBESTOS AND LEAD-CONTAINING PAINT SURVEY REPORT
BRACE ROAD OC (BR. NO. 19-0096)
03-PLA-80, POST MILE 8.13
PLACER COUNTY, CA
CONTRACT NO. 03A1368, E-FIS 0300000473.1 (EA 03-3E1001)
TASK ORDER NO. 186

Dear Ms. Beyer:

In accordance with California Department of Transportation Contract No. 03A1368 and Task Order No. 186 (TO-186), we have performed an asbestos and lead-containing paint (LCP) survey of the subject bridge in Placer County, California. The scope of services included surveying the bridge for suspect asbestos-containing materials (ACM) and lead-containing paint, collecting bulk samples, and submitting the samples to laboratories for analyses.

PROJECT DESCRIPTION

The project consists of upgrading the Brace Road Overcrossing (OC), Br. No. 19-0096, at Post Mile (PM) 8.13 on Highway 80 in Placer County, California. We performed asbestos and LCP survey activities at the project location. The project location is depicted on the Vicinity Map, Figure 1, and Site Plan, Figure 2.

GENERAL OBJECTIVES

The scope of services outlined in TO-186 included the determination of the presence and quantity of asbestos and LCP at the project location prior to various improvements. Assuming that no asbestos is added during future operations, our survey would satisfy National Emissions Standards for Hazardous Air Pollutants (NESHAP) requirements. The information obtained from this investigation will be used by Caltrans for waste profiling, determining California Occupational Safety and Health Administration (Cal/OSHA) applicability, and coordinating asbestos and LCP disturbance activities.

BACKGROUND

Asbestos

The Code of Federal Regulations (CFR), 40 CFR 61, Subpart M, NESHAP and Federal Occupational Safety and Health Administration (FED OSHA) classify ACM as any material or product that contains *greater than* 1% asbestos. Nonfriable ACM is classified by NESHAP as either Category I or Category II material defined as follows:

- **Category I** – asbestos-containing packings, gaskets, resilient floor coverings, and asphalt roofing products.
- **Category II** – all remaining types of nonfriable asbestos-containing material not included in Category I that when dry, cannot be crumbled, pulverized, or reduced to powder by hand pressure.

Regulated asbestos-containing material (RACM), a hazardous waste when friable, is classified as any manufactured material that contains *greater than* 1% asbestos by dry weight *and* is:

- Friable (can be crumbled, pulverized, or reduced to powder by hand pressure); or
- Category I material that has become friable; or
- Category I material that has been subjected to sanding, grinding, cutting, or abrading; or
- Category II nonfriable material that has a high probability of becoming crumbled, pulverized, or reduced to a powder during demolition or renovation activities.

Activities that disturb materials containing *any* amount of asbestos are subject to certain requirements of the Cal/OSHA asbestos standard contained in Title 8, CCR Section 1529. Typically, removal or disturbance of more than 100 square feet of material containing more than 0.1% asbestos must be performed by a registered asbestos abatement contractor, but associated waste labeling is not required if the material contains 1% or less asbestos. When the asbestos content of a material exceeds 1%, virtually all requirements of the standard become effective.

Materials containing more than 1% asbestos are also subject to NESHAP regulations (40 CFR Part 61, Subpart M). RACM (friable ACM and nonfriable ACM that will become friable during demolition operations) must be removed from structures prior to demolition. Certain nonfriable ACM and materials containing 1% or less asbestos may remain in structures during demolition; however, there are waste handling/disposal issues and Cal/OSHA work requirements that must be addressed. Contractors are responsible for segregating and characterizing waste streams prior to disposal.

With respect to potential worker exposure, notification, and registration requirements, Cal/OSHA defines asbestos-containing construction material (ACCM) as construction material that contains more than 0.1% asbestos (Title 8, CCR 341.6).

Lead Paint

Construction activities (including demolition) that disturb materials or paints containing *any* amount of lead are subject to certain requirements of the Cal/OSHA lead standard contained in Title 8, CCR, Section 1532.1. Deteriorated paint is defined by Title 17, CCR, Division 1, Chapter 8, §35022 as a surface coating that is cracking, chalking, flaking, chipping, peeling, non-intact, failed, or otherwise separating from a substrate. Demolition of a deteriorated LCP component would require waste characterization and appropriate disposal. Intact LCP on a component is currently accepted by most landfills and recycling facilities; however, contractors are responsible for segregating and characterizing waste streams prior to disposal.

For a solid waste containing lead, the waste is classified as California hazardous when: 1) the representative total lead content equals or exceeds the respective Total Threshold Limit Concentration (TTLC) of 1,000 milligrams per kilogram (mg/kg); or 2) the representative soluble lead content equals or exceeds the respective Soluble Threshold Limit Concentration (STLC) of 5 milligrams per liter (mg/l) based on the standard Waste Extraction Test (WET). A waste has the potential for exceeding the lead STLC when the waste's representative total lead content is greater than or equal to ten times the respective STLC value since the WET uses a 1:10 dilution ratio. Hence, when total lead is detected at a concentration greater than or equal to 50 mg/kg, and assuming that 100 percent of the total lead is soluble, soluble lead analysis is required. Lead-containing waste is classified as "Resource, Conservation, and Recovery Act" (RCRA) hazardous, or Federal hazardous, when the soluble lead content equals or exceeds the Federal regulatory level of 5 mg/l based on the Toxicity Characteristic Leaching Procedure (TCLP).

The above regulatory criteria are based on chemical concentrations. Wastes may also be classified as hazardous based on other criteria such as ignitability; however, for the purposes of this investigation, toxicity (i.e., lead concentration) is the primary factor considered for waste classification since waste generated during the construction activities would not likely warrant testing for ignitability or other criteria. Waste that is classified as either California-hazardous or RCRA-hazardous requires management as a hazardous waste.

Potential hazards exist to workers who remove or cut through LCP coatings during demolition. Dust containing hazardous concentrations of lead may be generated during scraping or cutting materials coated with lead-containing paint. Torching of these materials may produce lead oxide fumes. Therefore, air monitoring and/or respiratory protection may be required during the demolition of materials coated with LCP. Guidelines regarding regulatory provisions for construction work where workers may be exposed to lead are presented in Title 8, CCR, Section 1532.1.

Architectural Drawings and Previous Survey Activities

We reviewed structure architectural plans and bridge maintenance records provided by Caltrans prior to field activities. We did not observe specifications or notes regarding the use of asbestos-containing materials or lead paint in the architectural plans and maintenance records provided. Previous asbestos survey reports were not available for our review.

SCOPE OF SERVICES

Mr. Chris Giuntoli, a California-Certified Asbestos Consultant (CAC), certification No. 02-3163 (expiration June 19, 2012), and Certified Lead Paint Inspector/Assessor and Project Monitor with the California Department of Public Health Services (DPH), certification number I-5522 (expiration June 14, 2012), performed the asbestos and LCP survey at the project location on March 23, 2012.

Asbestos

Suspect ACM were grouped into homogeneous areas with representative samples randomly collected from each. In addition, each potential ACM was evaluated for friability. A total of four bulk asbestos samples representing two suspect components were collected.

Our procedures for inspection and sampling in accordance with TO-186 are discussed below:

- Collected bulk asbestos samples after first wetting friable materials with a light mist of water. The samples were then cut from the substrate and transferred to labeled containers.
- Relinquished bulk asbestos samples to EMSL Analytical, Inc., a California-licensed and Caltrans-approved subcontractor, for asbestos analysis in accordance with United States Environmental Protection Agency (EPA) Test Method 600/R-93/116 using polarized light microscopy (PLM) under chain-of-custody protocol. EMSL Analytical, Inc. is a laboratory accredited by the National Institute of Standards and Technology National Voluntary Laboratory Accreditation Program (NIST-NVLAP) for bulk asbestos fiber analysis. The laboratory analyses were requested on a five-day turnaround time.

Approximate sample locations are presented on Figure 2. Materials represented by the samples collected are shown in the attached photographs.

Lead Paint

Three bulk paint samples were collected from suspect LCP observed at the project location. Our sampling procedures in accordance with TO-186 are discussed below:

- Collected bulk samples of suspect LCP using techniques presented in HUD guidelines. In addition, the painted areas were evaluated for evidence of deterioration such as flaking or cracking.
- Relinquished bulk LCP samples under chain-of-custody protocol to Advanced Technology Laboratories, a California-licensed and Caltrans-approved subcontractor, for lead analysis in accordance with EPA Test Method 6010B. Additionally, one sample was analyzed for TCLP lead by EPA Test Method 1311/7420. Advanced Technology Laboratories is accredited by the DPH for lead analysis. The laboratory analyses were requested on a five-day turnaround time.

Approximate sample locations are presented on Figure 2. Materials represented by the samples collected are shown in the attached photographs.

INVESTIGATIVE RESULTS

Asbestos

No asbestos was detected in samples of the suspect materials collected during our survey. Sample identification numbers, material descriptions, approximate quantities, friability assessments, and a summary of the analytical laboratory test results for asbestos are summarized below. Reproductions of the laboratory report and chain-of-custody documentation are attached.

Polarized Light Microscopy (PLM) - EPA Test Method 600/R-93/116				
Sample No.	**Description of Material**	**Approximate Quantity**	**Friable**	**Asbestos Content**
96-1A and B	Expansion joint fill material (abutments)	NA	NA	ND
96-4A and B	Expansion joint fill material (abutment bents at k-rail)	NA	NA	ND

NA = Not applicable (no asbestos detected)
ND = Not detected

Lead Paint

A sample representing approximately 100 square feet of peeling and flaking white paint on the bridge guardrails exhibited a total lead concentration of 3,900 mg/kg and a TCLP lead concentration of 6.6 mg/l.

Samples representing intact yellow and white traffic striping exhibited total lead concentrations of 26 mg/kg and 4.6 mg/kg, respectively.

Sample identification numbers, descriptions, peeling and flaking quantities, and a summary of the analytical laboratory test results for paint are summarized below. Reproductions of the laboratory reports and chain-of-custody documentation are attached.

Total and Soluble Lead				
Sample No.	**Paint Description**	**Approximate Quantity Peeling/Flaking**	**Total Lead (mg/kg)**	**TCLP Lead (mg/l)**
96-P1	White paint (guardrails)	100 square feet	3,900	6.6
96-P2	Yellow traffic striping	Intact	26	---
96-P3	White traffic striping	Intact	4.6	---

TCLP = Toxicity Characteristic Leaching Procedure (EPA Test Method 1311/7420)
mg/kg = milligrams per kilogram (EPA Test Method 6010B)
mg/l = milligrams per liter
--- = Not analyzed

RECOMMENDATIONS

Asbestos

Since no asbestos was detected in samples collected during our survey, the Cal/OSHA asbestos standard does not apply for planned activities. In addition, demolition debris would not be considered a California hazardous waste based on asbestos content. However, written notification to U.S. EPA Region IX and the California Air Resources Board is required ten working days prior to commencement of *any* demolition activity (whether asbestos is present or not).

Lead Paint

Deteriorated white paint on the bridge guardrails sampled during our survey would be classified as California and Federal (RCRA) hazardous waste based on lead content.

Yellow and white traffic striping sampled during our survey would not be classified as a California hazardous waste or Federal (RCRA) waste based on lead content if stripped, blasted, or otherwise separated from the substrate.

We recommend that the deteriorated LCP on the guardrails be removed and disposed of prior to renovation, demolition, or other activities that would disturb the paint.

We recommend that the contractor be required to use personnel who have lead-related construction certification as supervisors or workers, as appropriate, from the California DPH for LCP removal work. Loose and peeling/flaking LCP require removal prior to demolition for waste segregation purposes: to separate potentially hazardous waste (Category III concentrated lead such as loose paint, paint sludge, vacuum debris, and vacuum filters) from non-hazardous demolition debris (Category II intact lead-painted architectural components). Category I waste is low lead waste (typically non-hazardous) such as construction materials, filtered wash water, and plastic sheeting. Contractors are responsible for informing the landfill of the contractor's intent to dispose of RCRA waste, California hazardous waste, and/or architectural components containing intact LCP. Some landfills may require additional waste characterization. Contractors are responsible for segregating and characterizing waste streams prior to disposal.

We recommend that all paints at the project location (graffiti, graffiti abatement, signage, etc.) be treated as lead-containing for purposes of determining the applicability of the Cal/OSHA lead standard during any future maintenance, renovation, and demolition activities. This recommendation is based on LCP sample results and the fact that lead was a common ingredient of paints manufactured before 1978 and is still an ingredient of some paints. In accordance with Title 8, CCR, Section 1532.1(p), written notification to the nearest Cal/OSHA district office is required at least 24 hours prior to certain lead-related work. Compliance and training requirements regarding construction activities where workers may be exposed to lead are presented in Title 8, CCR, Section 1532.1, subsections (e) and (l), respectively. Contractors are responsible for segregating and characterizing waste streams prior to disposal.

REPORT LIMITATIONS

The asbestos and LCP survey was conducted in conformance with generally accepted standards of practice for identifying and evaluating asbestos and LCP in structures. The survey addressed only the structure identified above. Due to the nature of structure surveys, asbestos and LCP use, and laboratory analytical limitations, some ACM or LCP at the project location may not have been identified. Spaces such as cavities, voids, crawlspaces, and pipe chases may have been concealed to our investigator. Previous renovation work may have concealed or covered spaces or materials or may have partially demolished materials and left debris in inaccessible areas. Additionally, renovation activities may have partially replaced ACM with indistinguishable non-ACM. Asbestos and/or LCP may exist in areas of the structure that were not accessible or sampled in conjunction with this TO.

During renovation or demolition operations, suspect materials may be uncovered which are different from those accessible for sampling during this assessment. Personnel in charge of renovation/demolition should be alerted to note materials uncovered during such activities that differ substantially from those included in this or previous assessment reports. If suspect ACM and/or LCP are found, additional sampling and analysis should be performed to determine if the materials contain asbestos or lead.

This report has been prepared exclusively for Caltrans. The information contained herein is only valid as of the date of the report and will require an update to reflect additional information obtained.

This report is not a comprehensive site characterization and should not be construed as such. The findings as presented in this report are predicated on the results of the limited sampling and laboratory testing performed. In addition, the information obtained is not intended to address potential impacts related to sources other than those specified herein. Therefore, the report should be deemed conclusive with respect to only the information obtained. We make no warranty, express or implied, with respect to the content of this report or any subsequent reports, correspondence or consultation. Geocon strived to perform the services summarized herein in accordance with the local standard of care in the geographic region at the time the services were rendered.

The contents of this report reflect the views of the author who is responsible for the facts and accuracy of the data presented herein. The contents do not necessarily reflect the official views or policies of the State of California or the Federal Highway Administration. This report does not constitute a standard, specification, or regulation.

Please contact us should you have any questions concerning the contents of this report or if we may be of further service.

Sincerely,

GEOCON CONSULTANTS, INC.

Chris Giuntoli, CAC
Senior Project Scientist

John E. Juhrend, PE, CEG
Project Manager

(2 + 2 CD) Addressee

Attachments: Figure 1, Vicinity Map
Figure 2, Site Plan
Site Photographs (1 through 9)
Analytical Laboratory Reports and Chain-of-custody Documentation

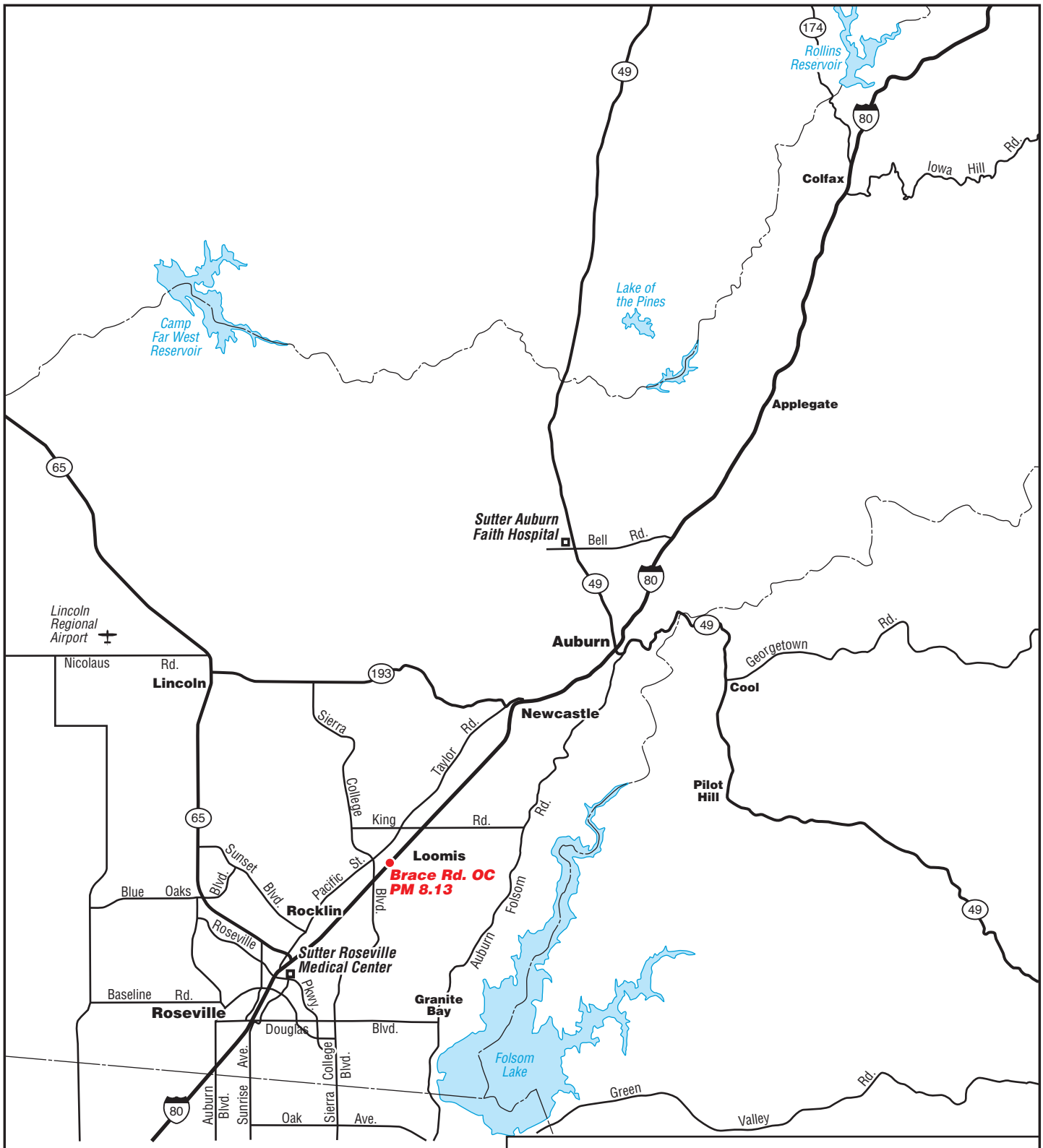

GEOCON CONSULTANTS, INC.

3160 GOLD VALLEY DR – SUITE 800 – RANCHO CORDOVA, CA 95742
PHONE 916.852.9118 – FAX 916.852.9132

Brace Road OC (Br. No. 19-0096)
03-PLA-80, Post Mile 8.13

Placer County, CA	**VICINITY MAP**
GEOCON Proj. No. S9300-06-186	
TO# 186, EA 03-3E1001	April 2012 — Figure 1

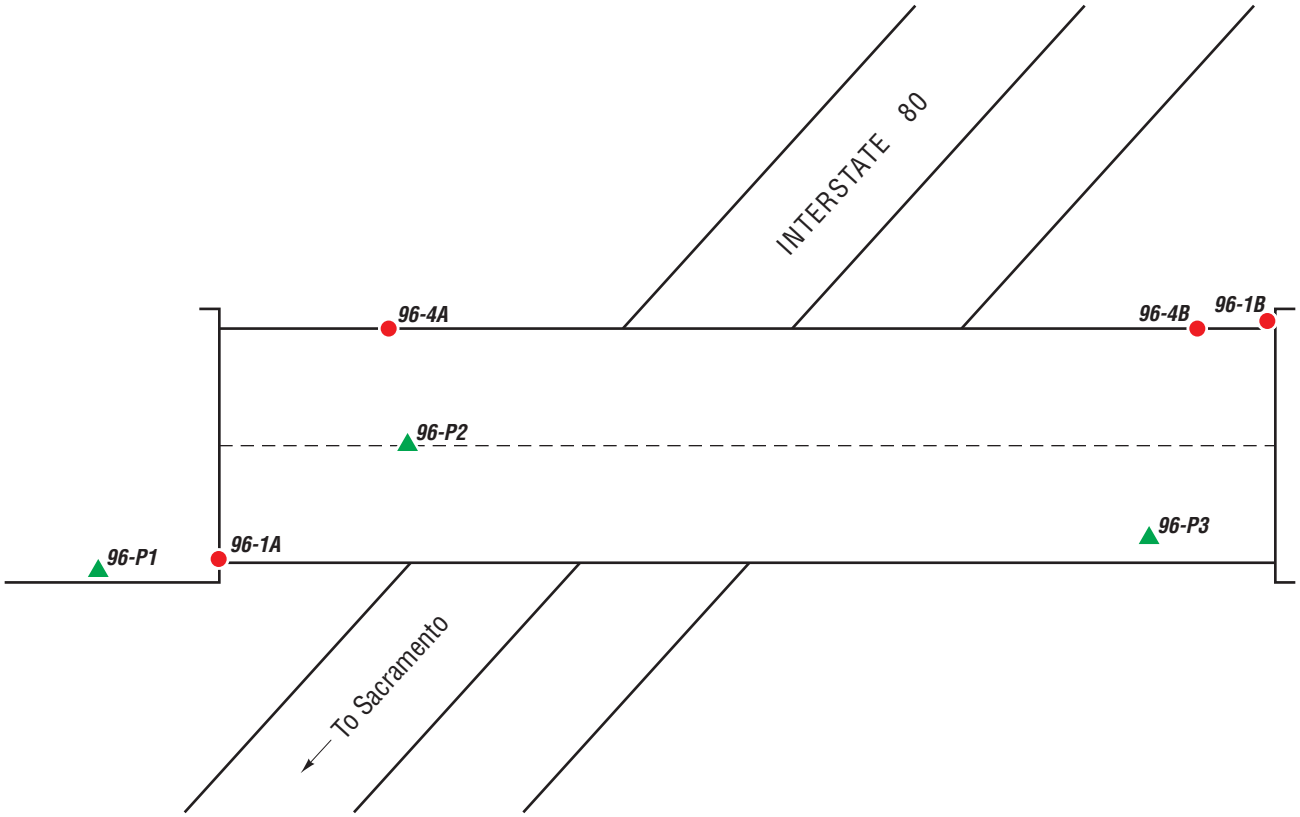

BRACE ROAD OC
(BR. NO. 19-0096)

N

NOT TO SCALE

LEGEND:

- ● Approximate Asbestos Sample Location
- ▲ Approximate Paint Sample Location

GEOCON
CONSULTANTS, INC.
3160 GOLD VALLEY DR – SUITE 800 – RANCHO CORDOVA, CA 95742
PHONE 916.852.9118 – FAX 916.852.9132

Brace Road OC (Br. No. 19-0096)
03-PLA-80, Post Mile 8.13

Placer County, CA	**SITE PLAN**	
GEOCON Proj. No. S9300-06-186		
TO# 186, EA 03-3E1001	April 2012	Figure 2

Photo 1 – Brace Road OC (Br. No. 19-0096) in Placer County, CA

Photo 2 – Br. No. 19-0096 deck and barrier rails

Photo 3 – Br. No. 19-0096 abutment expansion joint fill material

GEOCON
CONSULTANTS, INC.
3160 GOLD VALLEY DR – SUITE 800 – RANCHO CORDOVA, CA 95742
PHONE 916.852.9118 – FAX 916.852.9132

PHOTOGRAPHS 1, 2, AND 3		
Brace Road OC (Br. No. 19-0096) 03-PLA-80 PM 8.13		
S9300-06-186	TO #186	April 2012

Photo 4 – Br. No. 19-0096 yellow and white traffic striping

Photo 5 – Br. No. 19-0096 expansion joint fill material at abutment bent k-rails

Photo 6 – Br. No. 19-0096 white guardrail paint

GEOCON
CONSULTANTS, INC.
3160 GOLD VALLEY DR – SUITE 800 – RANCHO CORDOVA, CA 95742
PHONE 916.852.9118 – FAX 916.852.9132

PHOTOGRAPHS 4, 5, AND 6		
Brace Road OC (Br. No. 19-0096) 03-PLA-80 PM 8.13		
S9300-06-186	TO #186	April 2012

Photo 7 – Br. No. 19-0096 typical elastomeric deck joint seal (non-suspect)

Photo 8 – Br. No. 19-0096 elastomeric deck expansion joint fill material (non-suspect)

Photo 9 – Br. No. 19-0096 bearings (non-suspect)

GEOCON
CONSULTANTS, INC.
3160 GOLD VALLEY DR – SUITE 800 – RANCHO CORDOVA, CA 95742
PHONE 916.852.9118 – FAX 916.852.9132

PHOTOGRAPHS 7, 8, AND 9		
Brace Road OC (Br. No. 19-0096) 03-PLA-80 PM 8.13		
S9300-06-186	TO #186	April 2012

EMSL Analytical, Inc
2235 Polvorosa Ave , Suite 230, San Leandro, CA 94577
Phone/Fax: (510) 895-3675 / (510) 895-3680
http://www.emsl.com sanleandrolab@emsl.com

EMSL Order:	091203746
CustomerID:	GCNV25
CustomerPO:	S9300-06-186
ProjectID:	S9300-06-**

Attn: **Chris Giuntoli**
Geocon Consultants, Inc.
4010 Technology Way Ste D
Carson City, NV 89706

Phone:	(775) 888-9900
Fax:	(775) 888-9904
Received:	03/26/12 8:15 AM
Analysis Date:	3/26/2012
Collected:	3/23/2012

Project: **S9300-06-186**

Test Report: Asbestos Analysis of Bulk Materials via EPA 600/R-93/116 and/or EPA 600/M4-82-020 Method(s) using Polarized Light Microscopy

			Non-Asbestos				Asbestos
Sample	**Description**	**Appearance**	**%**	**Fibrous**	**%**	**Non-Fibrous**	**% Type**
96-1A-Expansion Joint Fill Material *091203746-0001*	EXPANSION JOINT FILL MATERIAL	Brown Fibrous Homogeneous	80%	Cellulose	20%	Non-fibrous (other)	**None Detected**
96-1B-Expansion Joint Fill Material *091203746-0002*	EXPANSION JOINT FILL MATERIAL	Brown Fibrous Homogeneous	80%	Cellulose	20%	Non-fibrous (other)	**None Detected**
96-2A-Yellow Paint *091203746-0003*	YELLOW PAINT	Yellow Non-Fibrous Homogeneous			100%	Non-fibrous (other)	**None Detected**
96-2B-Yellow Paint *091203746-0004*	YELLOW PAINT	Yellow Non-Fibrous Homogeneous			100%	Non-fibrous (other)	**None Detected**
96-3A-White Paint *091203746-0005*	WHITE PAINT	White Non-Fibrous Homogeneous			100%	Non-fibrous (other)	**None Detected**
96-3B-White Paint *091203746-0006*	WHITE PAINT	White Non-Fibrous Heterogeneous			100%	Non-fibrous (other)	**None Detected**
96-4A-Expansion Joint Fill Material *091203746-0007*	EXPANSION JOINT FILL MATERIAL	Brown Fibrous Homogeneous	80%	Cellulose	20%	Non-fibrous (other)	**None Detected**

Analyst(s)
Matthew Batongbacal (8)

Baojia Ke, Laboratory Manager
or other approved signatory

EMSL maintains liability limited to cost of analysis. This report relates only to the samples reported and may not be reproduced, except in full, without written approval by EMSL. EMSL bears no responsibility for sample collection activities or analytical method limitations. Interpretation and use of test results are the responsibility of the client. This report must not be used by the client to claim product certification, approval, or endorsement by NVLAP, NIST or any agency of the federal government. Non-friable organically bound materials present a problem matrix and therefore EMSL recommends gravimetric reduction prior to analysis. Samples received in good condition unless otherwise noted. Estimated accuracy, precision and uncertainty data available upon request. Unless requested by the client, building materials manufactured with multiple layers (i.e. linoleum, wallboard, etc.) are reported as a single sample. None Detected = <1%
Samples analyzed by EMSL Analytical, Inc San Leandro, CA NVLAP Lab Code 101048-3, MA AA000201, WA C2007

Initial report from 03/26/2012 18:25:30

EMSL Analytical, Inc
2235 Polvorosa Ave , Suite 230, San Leandro, CA 94577
Phone/Fax: (510) 895-3675 / (510) 895-3680
http://www.emsl.com sanleandrolab@emsl.com

EMSL Order:	091203746
CustomerID:	GCNV25
CustomerPO:	S9300-06-186
ProjectID:	S9300-06-**

Attn: **Chris Giuntoli**
Geocon Consultants, Inc.
4010 Technology Way Ste D
Carson City, NV 89706

Phone:	(775) 888-9900
Fax:	(775) 888-9904
Received:	03/26/12 8:15 AM
Analysis Date:	3/26/2012
Collected:	3/23/2012

Project: **S9300-06-186**

Test Report: Asbestos Analysis of Bulk Materials via EPA 600/R-93/116 and/or EPA 600/M4-82-020 Method(s) using Polarized Light Microscopy

			Non-Asbestos				Asbestos
Sample	**Description**	**Appearance**	**%**	**Fibrous**	**%**	**Non-Fibrous**	**% Type**
96-4B-Expansion Joint Fill Material *091203746-0008*	EXPANSION JOINT FILL MATERIAL	Brown Fibrous Homogeneous	80%	Cellulose	20%	Non-fibrous (other)	**None Detected**

Analyst(s)

Matthew Batongbacal (8)

Baojia Ke, Laboratory Manager
or other approved signatory

EMSL maintains liability limited to cost of analysis. This report relates only to the samples reported and may not be reproduced, except in full, without written approval by EMSL. EMSL bears no responsibility for sample collection activities or analytical method limitations. Interpretation and use of test results are the responsibility of the client. This report must not be used by the client to claim product certification, approval, or endorsement by NVLAP, NIST or any agency of the federal government. Non-friable organically bound materials present a problem matrix and therefore EMSL recommends gravimetric reduction prior to analysis. Samples received in good condition unless otherwise noted. Estimated accuracy, precision and uncertainty data available upon request. Unless requested by the client, building materials manufactured with multiple layers (i.e. linoleum, wallboard, etc.) are reported as a single sample. None Detected = <1%
Samples analyzed by EMSL Analytical, Inc San Leandro, CA NVLAP Lab Code 101048-3, MA AA000201, WA C2007

Initial report from 03/26/2012 18:25:30

091203746

EMSL ANALYTICAL, INC.
LABORATORY • PRODUCTS • TRAINING

Asbestos Chain of Custody

EMSL Order Number (*Lab Use Only*): 091203746

EMSL ANALYTICAL, INC.
2235 POLVOROSA AVE, STE 230
SAN LEANDRO, CA 94578
PHONE: (510) 895-3675
FAX: (510) 895-3680

Company: GEOCON	EMSL-Bill to: ☒ Same ☐ Different If Bill to is Different note instructions in Comments** *Third Party Billing requires written authorization from third party*
Street: 4010 TECHNOLOGY DR, D	
City: CARSON CITY State/Province: NV	Zip/Postal Code: 89706 Country:
Report To (Name): CHRIS GIONTOLI	Fax #:
Telephone #: 775-888-9900	Email Address: GIONTOLI@GEOCONINC.COM
Project Name/Number: S9300-06-186	
Please Provide Results: ☐ Fax ☒ Email	Purchase Order: U.S. State Samples Taken:

Turnaround Time (TAT) Options* – Please Check

☐ 3 Hours ☐ 6 Hours ☐ 24 Hrs ☐ 48 Hrs ☐ 3 Days ☐ 4 Days ☒ 5 Days ☐ 10 Days

*For TEM Air 3 hours/6 hours, please call ahead to schedule. *There is a premium charge for 3 Hour TEM AHERA or EPA Level II TAT. You will be asked to sign an authorization form for this service. Analysis completed in accordance with EMSL's Terms and Conditions located in the Analytical Price Guide.

PCM - Air
- ☐ NIOSH 7400
- ☐ w/ OSHA 8hr. TWA

PLM - Bulk (reporting limit)
- ☒ PLM EPA 600/R-93/116 (<1%)
- ☐ PLM EPA NOB (<1%)

Point Count
- ☐ 400 (<0.25%) ☐ 1000 (<0.1%)

Point Count w/Gravimetric
- ☐ 400 (<0.25%) ☐ 1000 (<0.1%)
- ☐ NYS 198.1 (friable in NY)
- ☐ NYS 198.6 NOB (non-friable-NY)
- ☐ NIOSH 9002 (<1%)

TEM - Air
- ☐ AHERA 40 CFR, Part 763
- ☐ NIOSH 7402
- ☐ EPA Level II
- ☐ ISO 10312

TEM - Bulk
- ☐ TEM EPA NOB
- ☐ NYS NOB 198.4 (non-friable-NY)
- ☐ Chatfield SOP
- ☐ TEM Mass Analysis-EPA 600 sec. 2.5

TEM – Water: EPA 100.2
- Fibers >10µm ☐ Waste ☐ Drinking
- All Fiber Sizes ☐ Waste ☐ Drinking

TEM- Dust
- ☐ Microvac - ASTM D 5755
- ☐ Wipe - ASTM D6480
- ☐ Carpet Sonication (EPA 600/J-93/167)

Soil/Rock/Vermiculite
- ☐ PLM CARB 435 - A (0.25% sensitivity)
- ☐ PLM CARB 435 - B (0.1% sensitivity)
- ☐ TEM CARB 435 - B (0.1% sensitivity)
- ☐ TEM CARB 435 - C (0.01% sensitivity)
- ☐ EPA Protocol (Semi-Quantitative)
- ☐ EPA Protocol (Quantitative)

Other:
- ☐

☐ **Check For Positive Stop – Clearly Identify Homogenous Group**

Samplers Name: CHRIS GIONTOLI **Samplers Signature:** [signature]

Sample #	Sample Description	Volume/Area (Air) HA # (Bulk)	Date/Time Sampled
96-1A	EXPANSION JOINT FILL MATERIA		3/23/12
96-1B	↓		
96-2A	YELLOW PAINT		
96-2B	↓		
96-3A	WHITE PAINT		
96-3B	↓		
96-4A	EXPANSION JOINT FILL MATERIAL		
96-4B	↓		

Client Sample # (s): - **Total # of Samples:** 8

Relinquished (Client): [signature] **Date:** 3/24/12 **Time:** 1600

Received (Lab): [signature] **Date:** RECEIVED MAR 26 2012 **Time:** 0815 PR

Comments/Special Instructions:
SEPARATE LAB REPORT

ADVANCED TECHNOLOGY LABORATORIES

April 03, 2012

ELAP No.: 1838
NELAP No.: 02107CA
CSDLAC No.: 10196
ORELAP No.: CA300003

Chris Giuntoli
Geocon Consultants, Inc.
4010 Technology Way, Suite D
Carson City, NV 89706
Tel: (775) 888-9900
Fax:(775) 888-9904

Re: ATL Work Order Number : 1201083
Client Reference : I-80 BRIDGES, S9300-06-186

Enclosed are the results for sample(s) received on March 27, 2012 by Advanced Technology Laboratories. The sample(s) are tested for the parameters as indicated on the enclosed chain of custody in accordance with applicable laboratory certifications. The laboratory results contained in this report specifically pertains to the sample(s) submitted.

Thank you for the opportunity to serve the needs of your company. If you have any questions, please feel free to contact me or your Project Manager.

Sincerely,

for

Eddie Rodriguez
Laboratory Director

The cover letter and the case narrative are an integral part of this analytical report and its absence renders the report invalid. The report cannot be reproduced without written permission from the client and Advanced Technology Laboratories.

Geocon Consultants, Inc.		Project Number :	I-80 BRIDGES, S9300-06-186
4010 Technology Way, Suite D		Report To :	Chris Giuntoli
Carson City , NV 89706		Reported :	04/03/2012

SUMMARY OF SAMPLES

Sample ID	Laboratory ID	Matrix	Date Sampled	Date Received
96-P1	1201083-01	Paint Chips	3/23/12 0:00	3/27/12 9:19
96-P2	1201083-02	Paint Chips	3/23/12 0:00	3/27/12 9:19
96-P3	1201083-03	Paint Chips	3/23/12 0:00	3/27/12 9:19

Geocon Consultants, Inc.		Project Number :	I-80 BRIDGES, S9300-06-186
4010 Technology Way, Suite D		Report To :	Chris Giuntoli
Carson City , NV 89706		Reported :	04/03/2012

Total Metals by ICP-AES EPA 6010B

Analyte: Lead **Analyst: KK/HF**

Laboratory ID	Client Sample ID	Result	Units	PQL	MDL	Dilution	Batch	Prepared	Date/Time Analyzed	Notes
1201083-01	96-P1	**3900**	mg/kg	2.0	NA	1	B2C0766	03/28/2012	04/03/12 12:08	
1201083-02	96-P2	**26**	mg/kg	2.0	NA	1	B2C0766	03/28/2012	04/03/12 12:10	
1201083-03	96-P3	**4.6**	mg/kg	2.0	NA	1	B2C0766	03/28/2012	04/03/12 12:12	

Geocon Consultants, Inc.		Project Number :	I-80 BRIDGES, S9300-06-186
4010 Technology Way, Suite D		Report To :	Chris Giuntoli
Carson City , NV 89706		Reported :	04/03/2012

QUALITY CONTROL SECTION

Total Metals by ICP-AES EPA 6010B - Quality Control

Analyte	Result (mg/kg)	PQL (mg/kg)	Spike Level	Source Result	% Rec	% Rec Limits	RPD	RPD Limit	Notes
Batch B2C0766 - EPA 3050B									
Blank (B2C0766-BLK1)					Prepared: 3/28/2012 Analyzed: 4/3/2012				
Lead	ND	1.0			NR				
LCS (B2C0766-BS1)					Prepared: 3/28/2012 Analyzed: 4/3/2012				
Lead	45	1.0	50.0		89.4	80 - 120			
Duplicate (B2C0766-DUP1)		**Source: 1201086-02**			Prepared: 3/28/2012 Analyzed: 4/3/2012				
Lead	7200	20		11000	NR		40.0	20	R
Matrix Spike (B2C0766-MS1)		**Source: 1201086-02**			Prepared: 3/28/2012 Analyzed: 4/3/2012				
Lead	5500	20	250	11000	-2070	46 - 116			M1
Matrix Spike Dup (B2C0766-MSD1)		**Source: 1201086-02**			Prepared: 3/28/2012 Analyzed: 4/3/2012				
Lead	14000	20	250	11000	1110	46 - 116	83.6	20	M1, R

Geocon Consultants, Inc.		Project Number :	I-80 BRIDGES, S9300-06-186
4010 Technology Way, Suite D		Report To :	Chris Giuntoli
Carson City , NV 89706		Reported :	04/03/2012

Notes and Definitions

R	RPD value outside acceptance criteria. Calculation is based on raw values.
M1	Matrix spike recovery outside of acceptance limit. The analytical batch was validated by the laboratory control sample.
ND	Analyte not detected at or above reporting limit
PQL	Practical Quantitation Limit
MDL	Method Detection Limit
NR	Not Reported
RPD	Relative Percent Difference

CHAIN OF CUSTODY RECORD

Advanced Technology Laboratories
3275 Walnut Avenue
Signal Hill, CA 90755
(562) 989-4045 • Fax (562) 989-4040

FOR LABORATORY USE ONLY:

P.O.#:

Logged By: Date: 3/27/12

Method of Transport: Client ☐ ATL ☐ CA OverN ☐ FEDEX ☐ Other: GSO

Sample Condition Upon Receipt:
1. CHILLED Y☐ N☑
2. HEADSPACE (VOA) Y☐ N☐
3. CONTAINER INTACT Y☐ N☐
4. SEALED Y☐ N☐
5. # OF SPLS MATCH COC Y☐ N☐
6. PRESERVED Y☐ N☐

Client: GECON
Attn: CHRIS GIUNTOLI
Address: 4010 TECHNOLOGY WAY, SUITE D
City CARSON CITY State NV Zip Code 89706
TEL: (775) 888-9800
FAX: ( )

Project Name: I-80 BRIDGES
Project #: 59300-06-186
Sampler: (Printed Name) CHRIS GIUNTOLI (Signature)

Relinquished by: (Signature and Printed Name) Date: 3/26/12 Time: 1200 Received by: (Signature and Printed Name) Date: 3/27/12 Time: 9:15
Relinquished by: (Signature and Printed Name) Date: Time: Received by: (Signature and Printed Name) Date: Time:
Relinquished by: (Signature and Printed Name) Date: Time: Received by: (Signature and Printed Name) Date: Time:

I hereby authorize ATL to perform the work indicated below:
Project Mgr /Submitter: CHRIS GIUNTOLI 3/23/12
Print Name Date
Signature

Send Report To: Attn: SAME Co: Address: City State Zip

Bill To: Attn: SAME Co: Address: City State Zip

Special Instructions/Comments:
*SOLUBLE LEAD MAY BE REQUESTED BASED ON TOTAL LEAD RESULTS

Sample/Records - Archival & Disposal
Unless otherwise requested by client, all samples will be disposed 45 days after receipt and records will be disposed 1 year after submittal of final report.

Storage Fees (applies when storage is requested):
- Sample : $2.00 / sample / mo (after 45 days)
- Records : $1.00 / ATL workorder / mo (after 1 year)

Circle or Add Analysis(es) Requested

ITEM	LAB USE ONLY: Batch #: Lab No.	Sample Description: Sample I.D. / Location	Date	Time	8081A (Pesticides)	8082 (PCB)	8260B (Volatiles)	8270C (BNA)	6010B (Total Metal)	8015B (GRO) / BTEX	8015B (DRO)	TOTAL LEAD*	SOIL	WATER	GROUND WATER	WASTEWATER	PAINT CHIPS	TAT	Container(s) #	Container(s) Type	PRESERVATION	REMARKS
	1201053-01	96-P1	3/23/12									X					X	5-DAY	1	P B		
	2	96-P2	↓									↓					↓	↓	↓	↓		
	3	96-P3	↓									↓					↓	↓	↓	↓		

Q A / Q C: RTNE ☐ CT ☐ SWRCB ☐ Logcode ____ OTHER ____

• TAT starts 8 a.m. following day if samples received after 3 p.m.

TAT: A= Overnight ≤ 24 hr B= Emergency Next workday C= Critical 2 Workdays D= Urgent 3 Workdays E= Routine 7 Workdays

Container Types: T=Tube V=VOA L=Liter P=Pint J=Jar B=Tedlar G=Glass P=Plastic M=Metal

Preservatives: H=Hcl N=HNO_3 S=H_2SO_4 C=4°C Z=$Zn(AC)_2$ O=NaOH T=$Na_2S_2O_3$

ADVANCED TECHNOLOGY LABORATORIES

April 11, 2012

ELAP No.: 1838
NELAP No.: 02107CA
CSDLAC No.: 10196
ORELAP No.: CA300003

Chris Giuntoli
Geocon Consultants, Inc.
4010 Technology Way, Suite D
Carson City, NV 89706
Tel: (775) 888-9900
Fax:(775) 888-9904

Re: ATL Work Order Number : 1201083
Client Reference : I-80 BRIDGES, S9300-06-186

Enclosed are the results for sample(s) received on March 27, 2012 by Advanced Technology Laboratories. The sample(s) are tested for the parameters as indicated on the enclosed chain of custody in accordance with applicable laboratory certifications. The laboratory results contained in this report specifically pertains to the sample(s) submitted.

Thank you for the opportunity to serve the needs of your company. If you have any questions, please feel free to contact me or your Project Manager.

Sincerely,

Eddie Rodriguez
Laboratory Director

The cover letter and the case narrative are an integral part of this analytical report and its absence renders the report invalid. The report cannot be reproduced without written permission from the client and Advanced Technology Laboratories.

3275 Walnut Avenue, Signal Hill, CA 90755 • Tel: 562-989-4045 • Fax: 562-989-4040
www.atlglobal.com

Geocon Consultants, Inc.		Project Number :	I-80 BRIDGES, S9300-06-186
4010 Technology Way, Suite D		Report To :	Chris Giuntoli
Carson City , NV 89706		Reported :	04/11/2012

SUMMARY OF SAMPLES

Sample ID	Laboratory ID	Matrix	Date Sampled	Date Received
96-P1	1201083-01	Paint Chips	3/23/12 0:00	3/27/12 9:19

Geocon Consultants, Inc.		Project Number :	I-80 BRIDGES, S9300-06-186
4010 Technology Way, Suite D		Report To :	Chris Giuntoli
Carson City , NV 89706		Reported :	04/11/2012

TCLP Lead by AA (Direct Aspiration) EPA 7420

Analyte: Lead **Analyst: VV**

Laboratory ID	Client Sample ID	Result	Units	PQL	MDL	Dilution	Batch	Prepared	Date/Time Analyzed	Notes
1201083-01	96-P1	**6.6**	mg/L	0.50	NA	1	B2D0346	04/10/2012	04/10/12 13:57	

Geocon Consultants, Inc.	Project Number : I-80 BRIDGES, S9300-06-186
4010 Technology Way, Suite D	Report To : Chris Giuntoli
Carson City , NV 89706	Reported : 04/11/2012

QUALITY CONTROL SECTION

TCLP Lead by AA (Direct Aspiration) EPA 7420 - Quality Control

Analyte	Result (mg/L)	PQL (mg/L)	Spike Level	Source Result	% Rec	% Rec Limits	RPD	RPD Limit	Notes
Batch B2D0346 - EPA 3010A									
Blank (B2D0346-BLK1)					Prepared: 4/10/2012 Analyzed: 4/10/2012				
Lead	ND	0.50			NR				
Blank (B2D0346-BLK2)					Prepared: 4/10/2012 Analyzed: 4/10/2012				
Lead	ND	0.50			NR				
Blank (B2D0346-BLK3)					Prepared: 4/10/2012 Analyzed: 4/10/2012				
Lead	ND	0.50			NR				
Blank (B2D0346-BLK4)					Prepared: 4/10/2012 Analyzed: 4/10/2012				
Lead	ND	0.50			NR				
LCS (B2D0346-BS1)					Prepared: 4/10/2012 Analyzed: 4/10/2012				
Lead	1.0	0.50	1.00		101	80 - 120			
Duplicate (B2D0346-DUP1)		**Source: 1201166-31**			Prepared: 4/10/2012 Analyzed: 4/10/2012				
Lead	0.37	0.50		0.34	NR		7.75	20	
Duplicate (B2D0346-DUP2)		**Source: 1201166-30**			Prepared: 4/10/2012 Analyzed: 4/10/2012				
Lead	0.48	0.50		0.37	NR		25.6	20	M1
Matrix Spike (B2D0346-MS1)		**Source: 1201166-31**			Prepared: 4/10/2012 Analyzed: 4/10/2012				
Lead	3.2	0.50	2.50	0.34	114	80 - 120			
Matrix Spike (B2D0346-MS2)		**Source: 1201166-30**			Prepared: 4/10/2012 Analyzed: 4/10/2012				
Lead	3.4	0.50	2.50	0.37	121	80 - 120			M1
Matrix Spike (B2D0346-MS3)		**Source: 1201083-01**			Prepared: 4/10/2012 Analyzed: 4/10/2012				
Lead	13		5.00	6.6	126	80 - 120			M1
Matrix Spike Dup (B2D0346-MSD1)		**Source: 1201166-31**			Prepared: 4/10/2012 Analyzed: 4/10/2012				
Lead	3.4	0.50	2.50	0.34	121	80 - 120	5.43	20	M1
Batch S2D0145 - B2D0346									
Instrument Blank (S2D0145-IBL1)					Prepared: 4/10/2012 Analyzed: 4/10/2012				
Lead	ND	0.50			NR				

Geocon Consultants, Inc.		Project Number :	I-80 BRIDGES, S9300-06-186
4010 Technology Way, Suite D		Report To :	Chris Giuntoli
Carson City , NV 89706		Reported :	04/11/2012

Notes and Definitions

M1	Matrix spike recovery outside of acceptance limit. The analytical batch was validated by the laboratory control sample.
ND	Analyte not detected at or above reporting limit
PQL	Practical Quantitation Limit
MDL	Method Detection Limit
NR	Not Reported
RPD	Relative Percent Difference

Diane Galvan

From: Chris Giuntoli [giuntoli@geoconinc.com]
Sent: Wednesday, April 04, 2012 2:38 PM
To: Diane Galvan
Subject: RE: Results/EDD/Invoice - I-80 BRIDGES (1201083)

Hi Diane,

For Work Order 1201083, please run TCLP lead for sample 96-P1 on a 5-day TAT.

Thanks,
Chris

Project No. S9300-06-186
April 30, 2012

Alicia Beyer, Task Order Manager
Caltrans District 3
Environmental Engineering Office
703 B Street
Marysville, California 95901

Subject: ASBESTOS AND LEAD-CONTAINING PAINT SURVEY REPORT
HORSESHOE BAR ROAD OC (BR. NO. 19-0097)
03-PLA-80, POST MILE 8.72
PLACER COUNTY, CA
CONTRACT NO. 03A1368, E-FIS 0300000473.1 (EA 03-3E1001)
TASK ORDER NO. 186

Dear Ms. Beyer:

In accordance with California Department of Transportation Contract No. 03A1368 and Task Order No. 186 (TO-186), we have performed an asbestos and lead-containing paint (LCP) survey of the subject bridge in Placer County, California. The scope of services included surveying the bridge for suspect asbestos-containing materials (ACM) and lead-containing paint, collecting bulk samples, and submitting the samples to laboratories for analyses.

PROJECT DESCRIPTION

The project consists of upgrading the Horseshoe Bar Road Overcrossing (OC), Br. No. 19-0097, at Post Mile (PM) 8.72 on Highway 80 in Placer County, California. The project location is depicted on the Vicinity Map, Figure 1, and Site Plan, Figure 2.

GENERAL OBJECTIVES

The scope of services outlined in TO-186 included the determination of the presence and quantity of asbestos and LCP at the project location prior to various improvements. Assuming that no asbestos is added during future operations, our survey would satisfy National Emissions Standards for Hazardous Air Pollutants (NESHAP) requirements. The information obtained from this investigation will be used by Caltrans for waste profiling, determining California Occupational Safety and Health Administration (Cal/OSHA) applicability, and coordinating asbestos and LCP disturbance activities.

BACKGROUND

Asbestos

The Code of Federal Regulations (CFR), 40 CFR 61, Subpart M, NESHAP and Federal Occupational Safety and Health Administration (FED OSHA) classify ACM as any material or product that contains *greater than* 1% asbestos. Nonfriable ACM is classified by NESHAP as either Category I or Category II material defined as follows:

- **Category I** – asbestos-containing packings, gaskets, resilient floor coverings, and asphalt roofing products.
- **Category II** – all remaining types of nonfriable asbestos-containing material not included in Category I that when dry, cannot be crumbled, pulverized, or reduced to powder by hand pressure.

Regulated asbestos-containing material (RACM), a hazardous waste when friable, is classified as any manufactured material that contains *greater than* 1% asbestos by dry weight *and* is:

- Friable (can be crumbled, pulverized, or reduced to powder by hand pressure); or
- Category I material that has become friable; or
- Category I material that has been subjected to sanding, grinding, cutting, or abrading; or
- Category II nonfriable material that has a high probability of becoming crumbled, pulverized, or reduced to a powder during demolition or renovation activities.

Activities that disturb materials containing *any* amount of asbestos are subject to certain requirements of the Cal/OSHA asbestos standard contained in Title 8, CCR Section 1529. Typically, removal or disturbance of more than 100 square feet of material containing more than 0.1% asbestos must be performed by a registered asbestos abatement contractor, but associated waste labeling is not required if the material contains 1% or less asbestos. When the asbestos content of a material exceeds 1%, virtually all requirements of the standard become effective.

Materials containing more than 1% asbestos are also subject to NESHAP regulations (40 CFR Part 61, Subpart M). RACM (friable ACM and nonfriable ACM that will become friable during demolition operations) must be removed from structures prior to demolition. Certain nonfriable ACM and materials containing 1% or less asbestos may remain in structures during demolition; however, there are waste handling/disposal issues and Cal/OSHA work requirements that must be addressed. Contractors are responsible for segregating and characterizing waste streams prior to disposal.

With respect to potential worker exposure, notification, and registration requirements, Cal/OSHA defines asbestos-containing construction material (ACCM) as construction material that contains more than 0.1% asbestos (Title 8, CCR 341.6).

Lead Paint

Construction activities (including demolition) that disturb materials or paints containing *any* amount of lead are subject to certain requirements of the Cal/OSHA lead standard contained in Title 8, CCR, Section 1532.1. Deteriorated paint is defined by Title 17, CCR, Division 1, Chapter 8, §35022 as a surface coating that is cracking, chalking, flaking, chipping, peeling, non-intact, failed, or otherwise separating from a substrate. Demolition of a deteriorated LCP component would require waste characterization and appropriate disposal. Intact LCP on a component is currently accepted by most landfills and recycling facilities; however, contractors are responsible for segregating and characterizing waste streams prior to disposal.

For a solid waste containing lead, the waste is classified as California hazardous when: 1) the representative total lead content equals or exceeds the respective Total Threshold Limit Concentration (TTLC) of 1,000 milligrams per kilogram (mg/kg); or 2) the representative soluble lead content equals or exceeds the respective Soluble Threshold Limit Concentration (STLC) of 5 milligrams per liter (mg/l) based on the standard Waste Extraction Test (WET). A waste has the potential for exceeding the lead STLC when the waste's representative total lead content is greater than or equal to ten times the respective STLC value since the WET uses a 1:10 dilution ratio. Hence, when total lead is detected at a concentration greater than or equal to 50 mg/kg, and assuming that 100 percent of the total lead is soluble, soluble lead analysis is required. Lead-containing waste is classified as "Resource, Conservation, and Recovery Act" (RCRA) hazardous, or Federal hazardous, when the soluble lead content equals or exceeds the Federal regulatory level of 5 mg/l based on the Toxicity Characteristic Leaching Procedure (TCLP).

The above regulatory criteria are based on chemical concentrations. Wastes may also be classified as hazardous based on other criteria such as ignitability; however, for the purposes of this investigation, toxicity (i.e., lead concentration) is the primary factor considered for waste classification since waste generated during the construction activities would not likely warrant testing for ignitability or other criteria. Waste that is classified as either California-hazardous or RCRA-hazardous requires management as a hazardous waste.

Potential hazards exist to workers who remove or cut through LCP coatings during demolition. Dust containing hazardous concentrations of lead may be generated during scraping or cutting materials coated with lead-containing paint. Torching of these materials may produce lead oxide fumes. Therefore, air monitoring and/or respiratory protection may be required during the demolition of materials coated with LCP. Guidelines regarding regulatory provisions for construction work where workers may be exposed to lead are presented in Title 8, CCR, Section 1532.1.

Architectural Drawings and Previous Survey Activities

We reviewed structure architectural plans provided by Caltrans prior to field activities. We did not observe specifications or notes regarding the use of asbestos-containing materials or lead paint in the architectural plans provided. Previous asbestos survey reports were not available for our review.

SCOPE OF SERVICES

Mr. Chris Giuntoli, a California-Certified Asbestos Consultant (CAC), certification No. 02-3163 (expiration June 19, 2012), and Certified Lead Paint Inspector/Assessor and Project Monitor with the California Department of Public Health Services (DPH), certification number I-5522 (expiration June 14, 2012), performed the asbestos and LCP survey at the project location on March 23, 2012.

Asbestos

Suspect ACM were grouped into homogeneous areas with representative samples randomly collected from each. In addition, each potential ACM was evaluated for friability. A total of six bulk asbestos samples representing three suspect components were collected.

Our procedures for inspection and sampling in accordance with TO-186 are discussed below:

- Collected bulk asbestos samples after first wetting friable materials with a light mist of water. The samples were then cut from the substrate and transferred to labeled containers.
- Relinquished bulk asbestos samples to EMSL Analytical, Inc., a California-licensed and Caltrans-approved subcontractor, for asbestos analysis in accordance with United States Environmental Protection Agency (EPA) Test Method 600/R-93/116 using polarized light microscopy (PLM) under chain-of-custody protocol. EMSL Analytical, Inc. is a laboratory accredited by the National Institute of Standards and Technology National Voluntary Laboratory Accreditation Program (NIST-NVLAP) for bulk asbestos fiber analysis. The laboratory analyses were requested on a five-day turnaround time.

Approximate sample locations are presented on Figure 2. Materials represented by the samples collected are shown in the attached photographs.

Lead Paint

Two bulk paint samples were collected from suspect LCP observed at the project location. Our sampling procedures in accordance with TO-186 are discussed below:

- Collected bulk samples of suspect LCP using techniques presented in HUD guidelines. In addition, the painted areas were evaluated for evidence of deterioration such as flaking or cracking.
- Relinquished bulk LCP samples under chain-of-custody protocol to Advanced Technology Laboratories, a California-licensed and Caltrans-approved subcontractor, for lead analysis in accordance with EPA Test Method 6010B. Additionally, one sample was analyzed for TCLP lead by EPA Test Method 1311/7420. Advanced Technology Laboratories is accredited by the DPH for lead analysis. The laboratory analyses were requested on a five-day turnaround time.

Approximate sample locations are presented on Figure 2. Materials represented by the samples collected are shown in the attached photographs.

INVESTIGATIVE RESULTS

Asbestos

Chrysotile asbestos at concentrations of 80% and 85% was detected in samples representing approximately 100 square feet of nonfriable sheet packing at the abutment bent/k-rail joints (see attached photographs).

No asbestos was detected in samples of the remaining suspect materials collected during our survey. Sample identification numbers, material descriptions, approximate quantities, friability assessments, and a summary of the analytical laboratory test results for asbestos are summarized below. Reproductions of the laboratory report and chain-of-custody documentation are attached.

Polarized Light Microscopy (PLM) - EPA Test Method 600/R-93/116				
Sample No.	**Description of Material**	**Approximate Quantity**	**Friable**	**Asbestos Content**
97-1A and B	Expansion joint fill material (abutments)	NA	NA	ND
97-3A and B	**Sheet packing (abutment bents at k-rail)**	**100 square feet**	**No**	**80% and 85%**
97-4A and B	Expansion joint fill material (abutment bents at k-rail)	NA	NA	ND

NA = Not applicable (no asbestos detected)
ND = Not detected

Lead Paint

A sample representing approximately 50 square feet of peeling and flaking white paint on the bridge guardrails exhibited a total lead concentration of 2,000 mg/kg and a TCLP lead concentration of 2.4 mg/l.

A sample representing intact yellow traffic striping exhibited a total lead concentration of 2.7 mg/kg.

Sample identification numbers, descriptions, peeling and flaking quantities, and a summary of the analytical laboratory test results for paint are summarized below. Reproductions of the laboratory reports and chain-of-custody documentation are attached.

Total and Soluble Lead				
Sample No.	**Paint Description**	**Approximate Quantity Peeling/Flaking**	**Total Lead (mg/kg)**	**TCLP Lead (mg/l)**
97-P1	White guardrail paint	50 square feet	2,000	2.4
97-P2	Yellow traffic striping	Intact	2.7	---

TCLP = Toxicity Characteristic Leaching Procedure (EPA Test Method 1311/7420)
mg/kg = milligrams per kilogram (EPA Test Method 6010B)
mg/l = milligrams per liter
--- = Not analyzed

RECOMMENDATIONS

Asbestos

NESHAP regulations do not require that asbestos-containing sheet packing (a Category I nonfriable/nonhazardous material) identified during our survey be removed prior to demolition or be treated as hazardous waste. However, the disturbance of the material is still covered by the Cal/OSHA asbestos standard (Title 8, CCR Section 1529).

We recommend that a licensed contractor registered with Cal/OSHA for asbestos-related work perform any activities that would *disturb* the asbestos-containing material identified during our survey. Contractors are responsible for informing the landfill of the contractor's intent to dispose of asbestos waste. Some landfills and recycling facilities may require additional waste characterization. Contractors are responsible for segregating and characterizing waste streams prior to disposal.

Geocon also recommends the notification of contractors (that will be conducting renovation, demolition, or related activities) of the presence of asbestos in their work areas (i.e., provide contractor[s] with a copy of this report and a list of asbestos removed during subsequent activities). Contractors not trained for asbestos work should be instructed not to disturb asbestos during their activities.

Written notification to U.S. EPA Region IX and the California Air Resources Board is required ten working days prior to commencement of *any* demolition activity (whether asbestos is present or not). In accordance with Title 8, CCR 341.9, written notification to the nearest Cal/OSHA district office is required at least 24 hours prior to certain asbestos-related work.

Lead Paint

Deteriorated white paint on the bridge guardrails sampled during our survey would be classified as a California hazardous waste based on lead content.

Yellow traffic striping sampled during our survey would not be classified as a California hazardous waste or Federal (RCRA) waste based on lead content if stripped, blasted, or otherwise separated from the substrate.

We recommend that the deteriorated LCP on the guardrails be removed and disposed of prior to renovation, demolition, or other activities that would disturb the paint.

We recommend that the contractor be required to use personnel who have lead-related construction certification as supervisors or workers, as appropriate, from the California DPH for LCP removal work. Loose and peeling/flaking LCP require removal prior to demolition for waste segregation purposes: to separate potentially hazardous waste (Category III concentrated lead such as loose paint, paint sludge, vacuum debris, and vacuum filters) from non-hazardous demolition debris (Category II intact lead-painted architectural components). Category I waste is low lead waste (typically non-hazardous) such as construction materials, filtered wash water, and plastic sheeting. Contractors are responsible for informing the landfill of the contractor's intent to dispose of RCRA waste, California hazardous waste, and/or architectural components containing intact LCP. Some landfills may require additional waste characterization. Contractors are responsible for segregating and characterizing waste streams prior to disposal.

We recommend that all paints at the project location (graffiti, graffiti abatement, signage, etc.) be treated as lead-containing for purposes of determining the applicability of the Cal/OSHA lead standard during any future maintenance, renovation, and demolition activities. This recommendation is based on LCP sample results and the fact that lead was a common ingredient of paints manufactured before 1978 and is still an ingredient of some paints. In accordance with Title 8, CCR, Section 1532.1(p), written notification to the nearest Cal/OSHA district office is required at least 24 hours prior to certain lead-related work. Compliance and training requirements regarding construction activities where workers may be exposed to lead are presented in Title 8, CCR, Section 1532.1, subsections (e) and (l), respectively. Contractors are responsible for segregating and characterizing waste streams prior to disposal.

REPORT LIMITATIONS

The asbestos and LCP survey was conducted in conformance with generally accepted standards of practice for identifying and evaluating asbestos and LCP in structures. The survey addressed only the structure identified above. Due to the nature of structure surveys, asbestos and LCP use, and laboratory analytical limitations, some ACM or LCP at the project location may not have been identified. Spaces such as cavities, voids, crawlspaces, and pipe chases may have been concealed to our investigator. Previous renovation work may have concealed or covered spaces or materials or may have partially demolished materials and left debris in inaccessible areas. Additionally, renovation activities may have partially replaced ACM with indistinguishable non-ACM. Asbestos and/or LCP may exist in areas of the structure that were not accessible or sampled in conjunction with this TO.

During renovation or demolition operations, suspect materials may be uncovered which are different from those accessible for sampling during this assessment. Personnel in charge of renovation/demolition should be alerted to note materials uncovered during such activities that differ substantially from those included in this or previous assessment reports. If suspect ACM and/or LCP are found, additional sampling and analysis should be performed to determine if the materials contain asbestos or lead.

This report has been prepared exclusively for Caltrans. The information contained herein is only valid as of the date of the report and will require an update to reflect additional information obtained.

This report is not a comprehensive site characterization and should not be construed as such. The findings as presented in this report are predicated on the results of the limited sampling and laboratory testing performed. In addition, the information obtained is not intended to address potential impacts related to sources other than those specified herein. Therefore, the report should be deemed conclusive with respect to only the information obtained. We make no warranty, express or implied, with respect to the content of this report or any subsequent reports, correspondence or consultation. Geocon strived to perform the services summarized herein in accordance with the local standard of care in the geographic region at the time the services were rendered.

The contents of this report reflect the views of the author who is responsible for the facts and accuracy of the data presented herein. The contents do not necessarily reflect the official views or policies of the State of California or the Federal Highway Administration. This report does not constitute a standard, specification, or regulation.

Please contact us should you have any questions concerning the contents of this report or if we may be of further service.

Sincerely,

GEOCON CONSULTANTS INC.

Chris Giuntoli, CAC
Senior Project Scientist

John E. Juhrend, PE, CEG
Project Manager

(2 + 2 CD) Addressee

Attachments: Figure 1, Vicinity Map
Figure 2, Site Plan
Site Photographs (1 through 8)
Analytical Laboratory Reports and Chain-of-custody Documentation

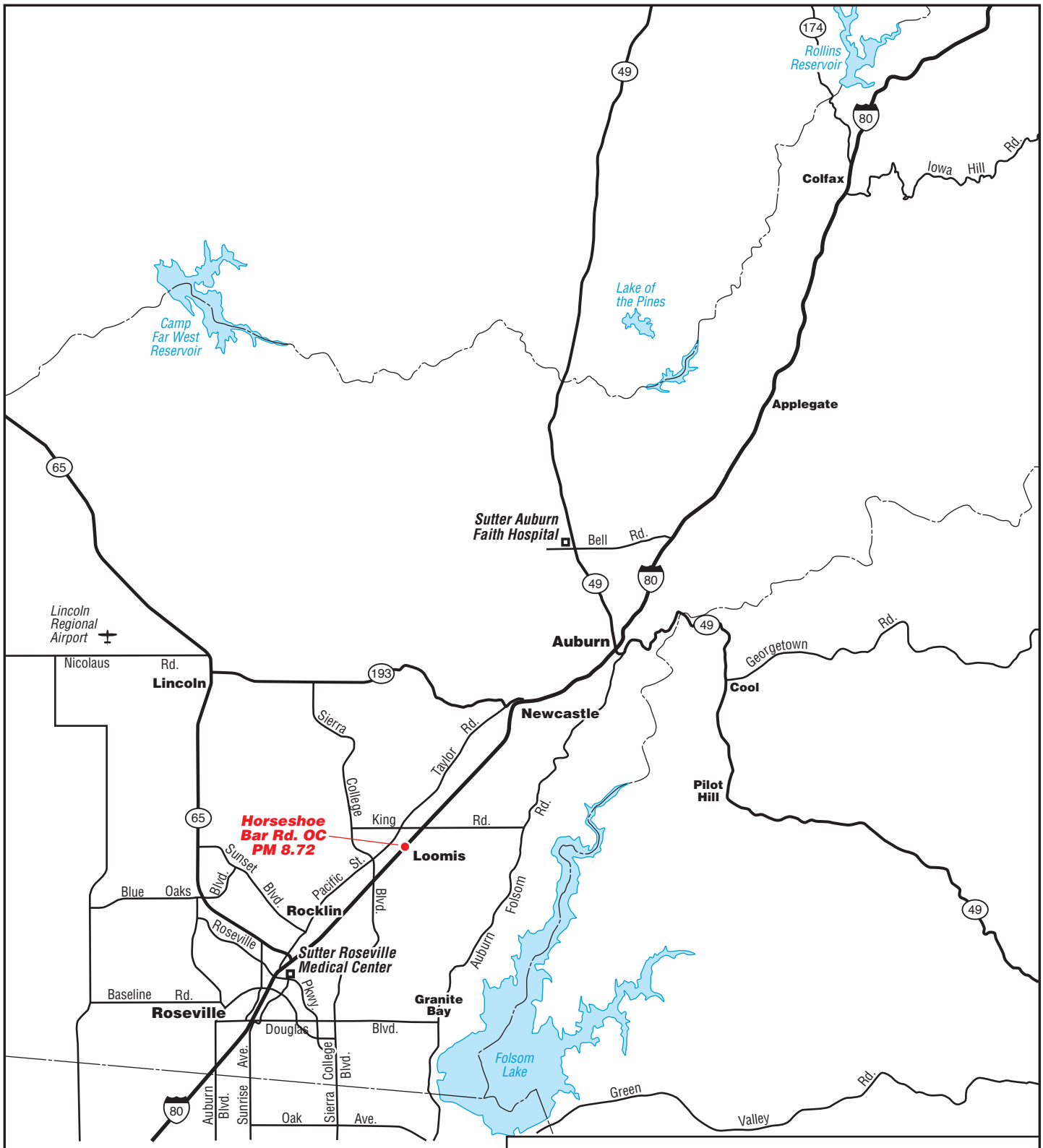

N

0 5

Scale in Miles

GEOCON CONSULTANTS, INC.

3160 GOLD VALLEY DR – SUITE 800 – RANCHO CORDOVA, CA 95742
PHONE 916.852.9118 – FAX 916.852.9132

Horseshoe Bar Road OC (Br. No. 19-0097)
03-PLA-80, Post Mile 8.72

Placer County, CA	**VICINITY MAP**
GEOCON Proj. No. S9300-06-186	
TO# 186, EA 03-3E1001	April 2012 — Figure 1

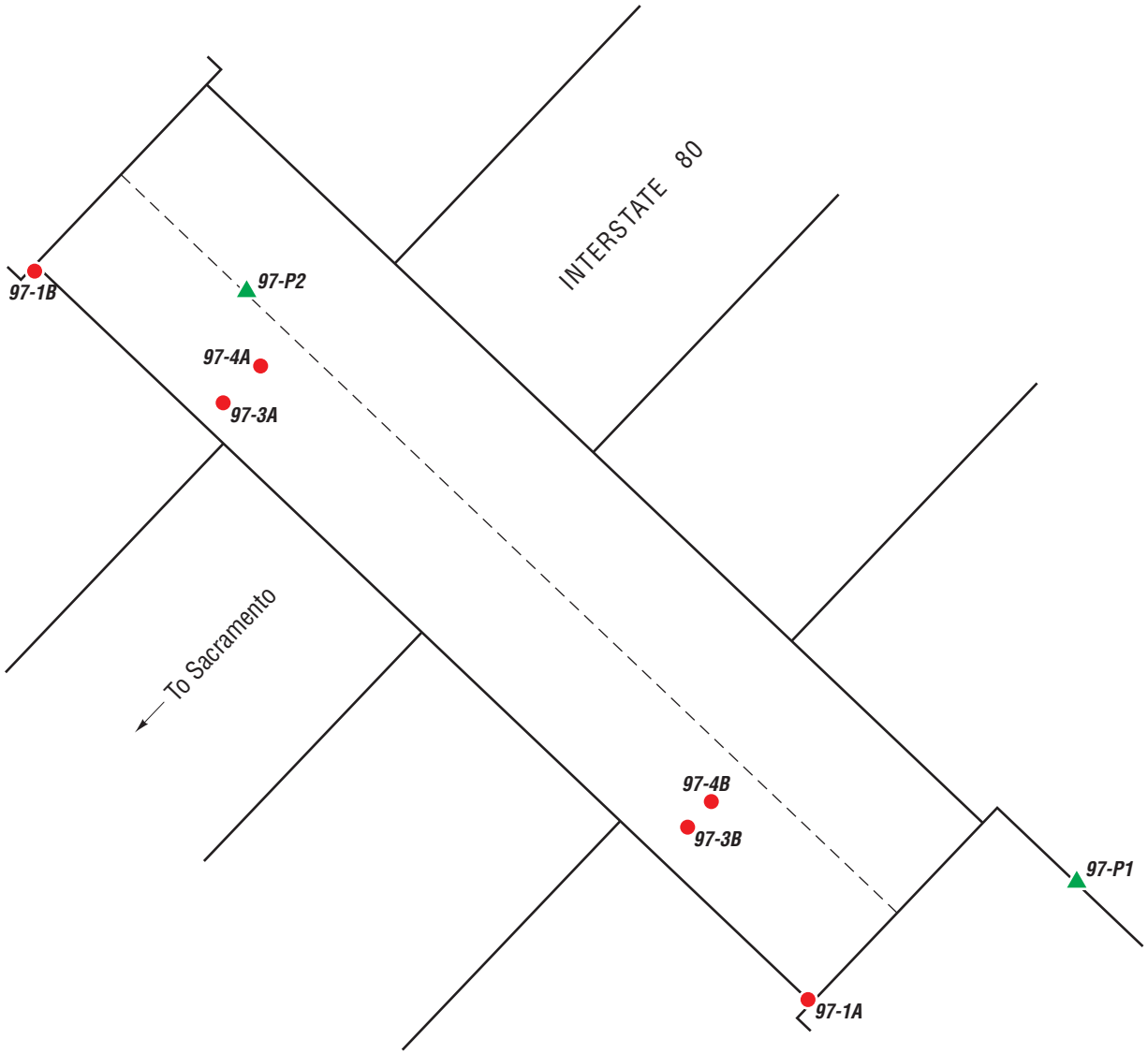

HORSESHOE BAR ROAD OC
(BR. NO. 19-0097)

NOT TO SCALE

LEGEND:

- Approximate Asbestos Sample Location
- Approximate Paint Sample Location

GEOCON CONSULTANTS, INC.
3160 GOLD VALLEY DR – SUITE 800 – RANCHO CORDOVA, CA 95742
PHONE 916.852.9118 – FAX 916.852.9132

Horseshoe Bar Road OC (Br. No. 19-0097)
03-PLA-80, Post Mile 8.72

Placer County, CA	**SITE PLAN**	
GEOCON Proj. No. S9300-06-186		
TO# 186, EA 03-3E1001	April 2012	Figure 2

Photo 1 – Horseshoe Bar Road OC (Br. No. 19-0097) in Placer County, CA

Photo 2 – Br. No. 19-0097 deck and barrier rails

Photo 3 – Br. No. 19-0097 abutment expansion joint fill material

GEOCON
CONSULTANTS, INC.
3160 GOLD VALLEY DR – SUITE 800 – RANCHO CORDOVA, CA 95742
PHONE 916.852.9118 – FAX 916.852.9132

PHOTOGRAPHS 1, 2, AND 3		
Horseshoe Bar Road OC (Br. No. 19-0097) 03-PLA-80 PM 8.72		
S9300-06-186	TO #186	April 2012

Photo 4 – Br. No. 19-0097 expansion joint fill material and asbestos-containing sheet packing at abutment bent k-rails

Photo 5 – Br. No. 19-0097 yellow traffic striping

Photo 6 – Br. No. 19-0097 white guardrail paint

Photo 7 – Br. No. 19-0097 typical elastomeric deck joint seal (non-suspect)

Photo 8 – Br. No. 19-0097 bearings (non-suspect)

GEOCON
CONSULTANTS, INC.
3160 GOLD VALLEY DR – SUITE 800 – RANCHO CORDOVA, CA 95742
PHONE 916.852.9118 – FAX 916.852.9132

PHOTOGRAPHS 7 AND 8		
Horseshoe Bar Road OC (Br. No. 19-0097) 03-PLA-80 PM 8.72		
S9300-06-186	TO #186	April 2012

EMSL Analytical, Inc
2235 Polvorosa Ave , Suite 230, San Leandro, CA 94577
Phone/Fax: (510) 895-3675 / (510) 895-3680
http://www.emsl.com sanleandrolab@emsl.com

EMSL Order:	091203750
CustomerID:	GCNV25
CustomerPO:	S9300-06-186
ProjectID:	S9300-06-**

Attn: **Chris Giuntoli**
Geocon Consultants, Inc.
4010 Technology Way Ste D
Carson City, NV 89706

Phone:	(775) 888-9900
Fax:	(775) 888-9904
Received:	03/26/12 8:15 AM
Analysis Date:	3/27/2012
Collected:	3/23/2012

Project: **S9300-06-186**

Test Report: Asbestos Analysis of Bulk Materials via EPA 600/R-93/116 and/or EPA 600/M4-82-020 Method(s) using Polarized Light Microscopy

			Non-Asbestos				Asbestos	
Sample	**Description**	**Appearance**	**%**	**Fibrous**	**%**	**Non-Fibrous**	**%**	**Type**
97-1A-Expansion Joint *091203750-0001*	EXPANSION JOINT FILL MATERIAL	Brown Fibrous Homogeneous	85%	Cellulose	15%	Non-fibrous (other)		**None Detected**
97-1B-Expansion Joint *091203750-0002*	EXPANSION JOINT FILL MATERIAL	Brown Fibrous Homogeneous	85%	Cellulose	15%	Non-fibrous (other)		**None Detected**
97-2A- Paint *091203750-0003*	YELLOW PAINT	Yellow Non-Fibrous Homogeneous			100%	Non-fibrous (other)		**None Detected**
97-2B- Paint *091203750-0004*	YELLOW PAINT	Yellow Non-Fibrous Homogeneous			100%	Non-fibrous (other)		**None Detected**
97-2B-Mastic *091203750-0004A*	YELLOW PAINT	Black Non-Fibrous Homogeneous			100%	Non-fibrous (other)		**None Detected**
97-3A-Shim Material *091203750-0005*	SHIM MATERIAL	Gray Fibrous Homogeneous			20%	Non-fibrous (other)	**80%**	**Chrysotile**
97-3B-Shim Material *091203750-0006*	SHIM MATERIAL	Gray Fibrous Homogeneous			15%	Non-fibrous (other)	**85%**	**Chrysotile**

Analyst(s)
Matthew Batongbacal (9)

Baojia Ke, Laboratory Manager
or other approved signatory

EMSL maintains liability limited to cost of analysis. This report relates only to the samples reported and may not be reproduced, except in full, without written approval by EMSL. EMSL bears no responsibility for sample collection activities or analytical method limitations. Interpretation and use of test results are the responsibility of the client. This report must not be used by the client to claim product certification, approval, or endorsement by NVLAP, NIST or any agency of the federal government. Non-friable organically bound materials present a problem matrix and therefore EMSL recommends gravimetric reduction prior to analysis. Samples received in good condition unless otherwise noted. Estimated accuracy, precision and uncertainty data available upon request. Unless requested by the client, building materials manufactured with multiple layers (i.e. linoleum, wallboard, etc.) are reported as a single sample. None Detected = <1%
Samples analyzed by EMSL Analytical, Inc San Leandro, CA NVLAP Lab Code 101048-3, MA AA000201, WA C2007

Initial report from 03/27/2012 15:31:10

EMSL Analytical, Inc
2235 Polvorosa Ave , Suite 230, San Leandro, CA 94577
Phone/Fax: (510) 895-3675 / (510) 895-3680
http://www.emsl.com sanleandrolab@emsl.com

EMSL Order:	091203750
CustomerID:	GCNV25
CustomerPO:	S9300-06-186
ProjectID:	S9300-06-**

Attn: **Chris Giuntoli**
Geocon Consultants, Inc.
4010 Technology Way Ste D
Carson City, NV 89706

Phone:	(775) 888-9900
Fax:	(775) 888-9904
Received:	03/26/12 8:15 AM
Analysis Date:	3/27/2012
Collected:	3/23/2012

Project: **S9300-06-186**

Test Report: Asbestos Analysis of Bulk Materials via EPA 600/R-93/116 and/or EPA 600/M4-82-020 Method(s) using Polarized Light Microscopy

			Non-Asbestos				Asbestos
Sample	**Description**	**Appearance**	**%**	**Fibrous**	**%**	**Non-Fibrous**	**% Type**
97-4A-Epansion Joint *091203750-0007*	EXPANSION JOINT FILL MATERIAL	Brown Fibrous Homogeneous	85%	Cellulose	15%	Non-fibrous (other)	**None Detected**
97-4B-Expansion Joint *091203750-0008*	EXPANSION JOINT FILL MATERIAL	Brown Fibrous Homogeneous	85%	Cellulose	15%	Non-fibrous (other)	**None Detected**

Analyst(s)

Matthew Batongbacal (9)

Baojia Ke, Laboratory Manager
or other approved signatory

EMSL maintains liability limited to cost of analysis. This report relates only to the samples reported and may not be reproduced, except in full, without written approval by EMSL. EMSL bears no responsibility for sample collection activities or analytical method limitations. Interpretation and use of test results are the responsibility of the client. This report must not be used by the client to claim product certification, approval, or endorsement by NVLAP, NIST or any agency of the federal government. Non-friable organically bound materials present a problem matrix and therefore EMSL recommends gravimetric reduction prior to analysis. Samples received in good condition unless otherwise noted. Estimated accuracy, precision and uncertainty data available upon request. Unless requested by the client, building materials manufactured with multiple layers (i.e. linoleum, wallboard, etc.) are reported as a single sample. None Detected = <1%
Samples analyzed by EMSL Analytical, Inc San Leandro, CA NVLAP Lab Code 101048-3, MA AA000201, WA C2007

Initial report from 03/27/2012 15:31:10

091203750

EMSL ANALYTICAL, INC.
LABORATORY • PRODUCTS • TRAINING

Asbestos Chain of Custody

EMSL Order Number *(Lab Use Only)*: 091203750

EMSL ANALYTICAL, INC.
2235 POLVOROSA DR., STE. 230
SAN LEANDRO, CA 94577
PHONE: (510) 895-3675
FAX: (510) 895-3680

Company: GEOCON	EMSL-Bill to: ☒ Same ☐ Different If Bill to is Different note instructions in Comments**
Street: 4010 TECHNOLOGY DR, D	*Third Party Billing requires written authorization from third party*
City: CARSON CITY State/Province: CA	Zip/Postal Code: 89706 Country:
Report To (Name): CHRIS GIUNTOLI	Fax #:
Telephone #: 775-888-9900	Email Address: GIUNTOLI@GEOCONINC.COM
Project Name/Number: 59300-06-186	
Please Provide Results: ☐ Fax ☒ Email Purchase Order:	U.S. State Samples Taken:

Turnaround Time (TAT) Options* – Please Check

☐ 3 Hour ☐ 6 Hour ☐ 24 Hour ☐ 48 Hour ☐ 72 Hour ☐ 96 Hour ☒ 1 Week ☐ 2 Week

*For TEM Air 3 hours/6 hours, please call ahead to schedule. *There is a premium charge for 3 Hour TEM AHERA or EPA Level II TAT. You will be asked to sign an authorization form for this service. Analysis completed in accordance with EMSL's Terms and Conditions located in the Analytical Price Guide.

PCM - Air
- ☐ NIOSH 7400
- ☐ w/ OSHA 8hr. TWA

PLM - Bulk (reporting limit)
- ☒ PLM EPA 600/R-93/116 (<1%)
- ☐ PLM EPA NOB (<1%)

Point Count
- ☐ 400 (<0.25%) ☐ 1000 (<0.1%)

Point Count w/Gravimetric
- ☐ 400 (<0.25%) ☐ 1000 (<0.1%)
- ☐ NYS 198.1 (friable in NY)
- ☐ NYS 198.6 NOB (non-friable-NY)
- ☐ NIOSH 9002 (<1%)

TEM – Air ☐ 4-4.5hr TAT (AHERA only)
- ☐ AHERA 40 CFR, Part 763
- ☐ NIOSH 7402
- ☐ EPA Level II
- ☐ ISO 10312

TEM - Bulk
- ☐ TEM EPA NOB
- ☐ NYS NOB 198.4 (non-friable-NY)
- ☐ Chatfield SOP
- ☐ TEM Mass Analysis-EPA 600 sec. 2.5

TEM – Water: EPA 100.2
- Fibers >10µm ☐ Waste ☐ Drinking
- All Fiber Sizes ☐ Waste ☐ Drinking

TEM- Dust
- ☐ Microvac - ASTM D 5755
- ☐ Wipe - ASTM D6480
- ☐ Carpet Sonication (EPA 600/J-93/167)

Soil/Rock/Vermiculite
- ☐ PLM CARB 435 - A (0.25% sensitivity)
- ☐ PLM CARB 435 - B (0.1% sensitivity)
- ☐ TEM CARB 435 - B (0.1% sensitivity)
- ☐ TEM CARB 435 - C (0.01% sensitivity)
- ☐ EPA Protocol (Semi-Quantitative)
- ☐ EPA Protocol (Quantitative)

Other:
- ☐

☐ **Check For Positive Stop – Clearly Identify Homogenous Group**

Samplers Name: CHRIS GIUNTOLI Samplers Signature: [signature]

Sample #	Sample Description	Volume/Area (Air) HA # (Bulk)	Date/Time Sampled
97-1A	EXPANSION JOINT FILL MATERIAL		3/23/12
97-1B	↓		↓
97-2A	YELLOW PAINT		↓
97-2B	↓		↓
97-3A	SHIM MATERIAL		↓
97-3B	↓		↓
97-4A	EXPANSION JOINT FILL MATERIAL		↓
97-4B	↓		↓

Client Sample # (s): Total # of Samples: 8

Relinquished (Client): [signature] Date: 3/24/12 Time: 1600

Received (Lab): [signature] Date: RECEIVED MAR 26 2012 Time: 0815 PX

Comments/Special Instructions:

SEPARATE SAMPLE LAB REPORT

ADVANCED TECHNOLOGY LABORATORIES

April 03, 2012

ELAP No.: 1838
NELAP No.: 02107CA
CSDLAC No.: 10196
ORELAP No.: CA300003

Chris Giuntoli
Geocon Consultants, Inc.
4010 Technology Way, Suite D
Carson City, NV 89706
Tel: (775) 888-9900
Fax:(775) 888-9904

Re: ATL Work Order Number : 1201084
Client Reference : I-80 BRIDGES, S9300-06-186

Enclosed are the results for sample(s) received on March 27, 2012 by Advanced Technology Laboratories. The sample(s) are tested for the parameters as indicated on the enclosed chain of custody in accordance with applicable laboratory certifications. The laboratory results contained in this report specifically pertains to the sample(s) submitted.

Thank you for the opportunity to serve the needs of your company. If you have any questions, please feel free to contact me or your Project Manager.

Sincerely,

for

Eddie Rodriguez
Laboratory Director

The cover letter and the case narrative are an integral part of this analytical report and its absence renders the report invalid. The report cannot be reproduced without written permission from the client and Advanced Technology Laboratories.

Geocon Consultants, Inc.		Project Number :	I-80 BRIDGES, S9300-06-186
4010 Technology Way, Suite D		Report To :	Chris Giuntoli
Carson City , NV 89706		Reported :	04/03/2012

SUMMARY OF SAMPLES

Sample ID	Laboratory ID	Matrix	Date Sampled	Date Received
97-P1	1201084-01	Paint Chips	3/23/12 0:00	3/27/12 9:19
97-P2	1201084-02	Paint Chips	3/23/12 0:00	3/27/12 9:19

Geocon Consultants, Inc.		Project Number :	I-80 BRIDGES, S9300-06-186
4010 Technology Way, Suite D		Report To :	Chris Giuntoli
Carson City , NV 89706		Reported :	04/03/2012

Total Metals by ICP-AES EPA 6010B

Analyte: Lead **Analyst: KK/HF**

Laboratory ID	Client Sample ID	Result	Units	PQL	MDL	Dilution	Batch	Prepared	Date/Time Analyzed	Notes
1201084-01	97-P1	**2000**	mg/kg	2.0	NA	1	B2C0766	03/28/2012	04/03/12 12:14	
1201084-02	97-P2	**2.7**	mg/kg	2.0	NA	1	B2C0766	03/28/2012	04/03/12 12:16	

Geocon Consultants, Inc.		Project Number :	I-80 BRIDGES, S9300-06-186
4010 Technology Way, Suite D		Report To :	Chris Giuntoli
Carson City , NV 89706		Reported :	04/03/2012

QUALITY CONTROL SECTION

Total Metals by ICP-AES EPA 6010B - Quality Control

Analyte	Result (mg/kg)	PQL (mg/kg)	Spike Level	Source Result	% Rec	% Rec Limits	RPD	RPD Limit	Notes
Batch B2C0766 - EPA 3050B									
Blank (B2C0766-BLK1)					Prepared: 3/28/2012 Analyzed: 4/3/2012				
Lead	ND	1.0			NR				
LCS (B2C0766-BS1)					Prepared: 3/28/2012 Analyzed: 4/3/2012				
Lead	45	1.0	50.0		89.4	80 - 120			
Duplicate (B2C0766-DUP1)		**Source: 1201086-02**			Prepared: 3/28/2012 Analyzed: 4/3/2012				
Lead	7200	20		11000	NR		40.0	20	R
Matrix Spike (B2C0766-MS1)		**Source: 1201086-02**			Prepared: 3/28/2012 Analyzed: 4/3/2012				
Lead	5500	20	250	11000	-2070	46 - 116			M1
Matrix Spike Dup (B2C0766-MSD1)		**Source: 1201086-02**			Prepared: 3/28/2012 Analyzed: 4/3/2012				
Lead	14000	20	250	11000	1110	46 - 116	83.6	20	M1, R

Geocon Consultants, Inc.		Project Number :	I-80 BRIDGES, S9300-06-186
4010 Technology Way, Suite D		Report To :	Chris Giuntoli
Carson City , NV 89706		Reported :	04/03/2012

Notes and Definitions

R	RPD value outside acceptance criteria. Calculation is based on raw values.
M1	Matrix spike recovery outside of acceptance limit. The analytical batch was validated by the laboratory control sample.
ND	Analyte not detected at or above reporting limit
PQL	Practical Quantitation Limit
MDL	Method Detection Limit
NR	Not Reported
RPD	Relative Percent Difference

CHAIN OF CUSTODY RECORD

Advanced Technology Laboratories
3275 Walnut Avenue
Signal Hill, CA 90755
(562) 989-4045 • Fax (562) 989-4040

FOR LABORATORY USE ONLY:

P.O.#:

Logged By: Date: 3/27/12

Method of Transport: Client ☐ ATL ☐ CA OverN ☐ FEDEX ☐ Other: GSO

Sample Condition Upon Receipt:
1. CHILLED Y☐ N☑
2. HEADSPACE (VOA) Y☐ N☐
3. CONTAINER INTACT Y☐ N☐
4. SEALED Y☐ N☐
5. # OF SPLS MATCH COC Y☐ N☐
6. PRESERVED Y☐ N☐

Client: GECCON
Attn: CHRIS GIUNTOLI
Address: 4010 TECHNOLOGY WAY, SUITE D
City CARSON CITY State NV Zip Code 89706
TEL: (775) 888-9800
FAX: ( )

Project Name: I-80 BRIDGES Project #: 39300-06-186 Sampler: (Printed Name) CHRIS GIUNTOLI (Signature)

Relinquished by: (Signature and Printed Name) Date: 3/26/12 Time: 1200 Received by: (Signature and Printed Name) Date: 3/27/12 Time: 9:19

Relinquished by: (Signature and Printed Name) Date: Time: Received by: (Signature and Printed Name) Date: Time:

Relinquished by: (Signature and Printed Name) Date: Time: Received by: (Signature and Printed Name) Date: Time:

I hereby authorize ATL to perform the work indicated below:
Project Mgr /Submitter:
CHRIS GIUNTOLI 3/23/12
Print Name Date
Signature

Send Report To:
Attn: SAME
Co:
Address
City State Zip

Bill To:
Attn: SAME
Co:
Address
City State Zip

Special Instructions/Comments:
*SOLUBLE LEAD MAY BE REQUESTED BASED ON TOTAL LEAD RESULTS

Sample/Records - Archival & Disposal
Unless otherwise requested by client, all samples will be disposed 45 days after receipt and records will be disposed 1 year after submittal of final report.

Storage Fees (applies when storage is requested):
- Sample : $2.00 / sample / mo (after 45 days)
- Records : $1.00 / ATL workorder / mo (after 1 year)

Circle or Add Analysis(es) Requested

ITEM	LAB USE ONLY: Batch #: Lab No.	Sample Description: Sample I.D. / Location	Date	Time	8081A (Pesticides)	8082 (PCB)	8260B (Volatiles)	8270C (BNA)	6010B (Total Metal)	8015B (GRO) / BTEX	8015B (DRO)	TOTAL LEAD*	SOIL	WATER	GROUND WATER	WASTEWATER	PAINT CHIPS	TAT	Container(s) #	Container(s) Type	PRESERVATION	REMARKS
	1201084-01	97-P1	3/23/12									X					X	5-DAY	1	PB		
	1 "	97-P2	↓									↓					↓	↓	↓	↓		

QA/QC: RTNE ☐ CT ☐ SWRCB ☐ Logcode ____ OTHER ____

• TAT starts 8 a.m. following day if samples received after 3 p.m.

TAT: A= Overnight ≤ 24 hr B= Emergency Next workday C= Critical 2 Workdays D= Urgent 3 Workdays E= Routine 7 Workdays

Container Types: T=Tube V=VOA L=Liter P=Pint J=Jar B=Tedlar G=Glass P=Plastic M=Metal

Preservatives: H=Hcl N=HNO_3 S=H_2SO_4 C=4°C Z=$Zn(AC)_2$ O=NaOH T=$Na_2S_2O_3$

ADVANCED TECHNOLOGY LABORATORIES

April 11, 2012

ELAP No.: 1838
NELAP No.: 02107CA
CSDLAC No.: 10196
ORELAP No.: CA300003

Chris Giuntoli
Geocon Consultants, Inc.
4010 Technology Way, Suite D
Carson City, NV 89706
Tel: (775) 888-9900
Fax:(775) 888-9904

Re: ATL Work Order Number : 1201084
Client Reference : I-80 BRIDGES, S9300-06-186

Enclosed are the results for sample(s) received on March 27, 2012 by Advanced Technology Laboratories. The sample(s) are tested for the parameters as indicated on the enclosed chain of custody in accordance with applicable laboratory certifications. The laboratory results contained in this report specifically pertains to the sample(s) submitted.

Thank you for the opportunity to serve the needs of your company. If you have any questions, please feel free to contact me or your Project Manager.

Sincerely,

Eddie Rodriguez
Laboratory Director

The cover letter and the case narrative are an integral part of this analytical report and its absence renders the report invalid. The report cannot be reproduced without written permission from the client and Advanced Technology Laboratories.

Geocon Consultants, Inc.		Project Number :	I-80 BRIDGES, S9300-06-186
4010 Technology Way, Suite D		Report To :	Chris Giuntoli
Carson City , NV 89706		Reported :	04/11/2012

SUMMARY OF SAMPLES

Sample ID	Laboratory ID	Matrix	Date Sampled	Date Received
97-P1	1201084-01	Paint Chips	3/23/12 0:00	3/27/12 9:19

Geocon Consultants, Inc.		Project Number :	I-80 BRIDGES, S9300-06-186
4010 Technology Way, Suite D		Report To :	Chris Giuntoli
Carson City , NV 89706		Reported :	04/11/2012

TCLP Lead by AA (Direct Aspiration) EPA 7420

Analyte: Lead **Analyst: VV**

Laboratory ID	Client Sample ID	Result	Units	PQL	MDL	Dilution	Batch	Prepared	Date/Time Analyzed	Notes
1201084-01	97-P1	**2.4**	mg/L	0.50	NA	1	B2D0346	04/10/2012	04/10/12 13:59	

Geocon Consultants, Inc.	Project Number : I-80 BRIDGES, S9300-06-186
4010 Technology Way, Suite D	Report To : Chris Giuntoli
Carson City , NV 89706	Reported : 04/11/2012

QUALITY CONTROL SECTION

TCLP Lead by AA (Direct Aspiration) EPA 7420 - Quality Control

Analyte	Result (mg/L)	PQL (mg/L)	Spike Level	Source Result	% Rec	% Rec Limits	RPD	RPD Limit	Notes
Batch B2D0346 - EPA 3010A									
Blank (B2D0346-BLK1)					Prepared: 4/10/2012 Analyzed: 4/10/2012				
Lead	ND	0.50			NR				
Blank (B2D0346-BLK2)					Prepared: 4/10/2012 Analyzed: 4/10/2012				
Lead	ND	0.50			NR				
Blank (B2D0346-BLK3)					Prepared: 4/10/2012 Analyzed: 4/10/2012				
Lead	ND	0.50			NR				
Blank (B2D0346-BLK4)					Prepared: 4/10/2012 Analyzed: 4/10/2012				
Lead	ND	0.50			NR				
LCS (B2D0346-BS1)					Prepared: 4/10/2012 Analyzed: 4/10/2012				
Lead	1.0	0.50	1.00		101	80 - 120			
Duplicate (B2D0346-DUP1)		**Source: 1201166-31**			Prepared: 4/10/2012 Analyzed: 4/10/2012				
Lead	0.37	0.50		0.34	NR		7.75	20	
Duplicate (B2D0346-DUP2)		**Source: 1201166-30**			Prepared: 4/10/2012 Analyzed: 4/10/2012				
Lead	0.48	0.50		0.37	NR		25.6	20	M1
Matrix Spike (B2D0346-MS1)		**Source: 1201166-31**			Prepared: 4/10/2012 Analyzed: 4/10/2012				
Lead	3.2	0.50	2.50	0.34	114	80 - 120			
Matrix Spike (B2D0346-MS2)		**Source: 1201166-30**			Prepared: 4/10/2012 Analyzed: 4/10/2012				
Lead	3.4	0.50	2.50	0.37	121	80 - 120			M1
Matrix Spike (B2D0346-MS3)		**Source: 1201083-01**			Prepared: 4/10/2012 Analyzed: 4/10/2012				
Lead	13		5.00	6.6	126	80 - 120			M1
Matrix Spike Dup (B2D0346-MSD1)		**Source: 1201166-31**			Prepared: 4/10/2012 Analyzed: 4/10/2012				
Lead	3.4	0.50	2.50	0.34	121	80 - 120	5.43	20	M1
Batch S2D0145 - B2D0346									
Instrument Blank (S2D0145-IBL1)					Prepared: 4/10/2012 Analyzed: 4/10/2012				
Lead	ND	0.50			NR				

Geocon Consultants, Inc.		Project Number :	I-80 BRIDGES, S9300-06-186
4010 Technology Way, Suite D		Report To :	Chris Giuntoli
Carson City , NV 89706		Reported :	04/11/2012

Notes and Definitions

M1	Matrix spike recovery outside of acceptance limit. The analytical batch was validated by the laboratory control sample.
ND	Analyte not detected at or above reporting limit
PQL	Practical Quantitation Limit
MDL	Method Detection Limit
NR	Not Reported
RPD	Relative Percent Difference

Diane Galvan

From: Chris Giuntoli [giuntoli@geoconinc.com]
Sent: Wednesday, April 04, 2012 2:39 PM
To: Diane Galvan
Subject: RE: Results/EDD/Invoice - I-80 BRIDGES (1201084)

Hi Diane,

For Work Order 1201084, please run TCLP lead for sample 97-P1 on a 5-day TAT.

Thanks,
Chris

Project No. S9300-06-186
April 30, 2012

Alicia Beyer, Task Order Manager
Caltrans District 3
Environmental Engineering Office
703 B Street
Marysville, California 95901

Subject: ASBESTOS AND LEAD-CONTAINING PAINT SURVEY REPORT
KING ROAD OC (BR. NO. 19-0098)
03-PLA-80, POST MILE 9.53
PLACER COUNTY, CA
CONTRACT NO. 03A1368, E-FIS 0300000473.1 (EA 03-3E1001)
TASK ORDER NO. 186

Dear Ms. Beyer:

In accordance with California Department of Transportation Contract No. 03A1368 and Task Order No. 186 (TO-186), we have performed an asbestos and lead-containing paint (LCP) survey of the subject bridge in Placer County, California. The scope of services included surveying the bridge for suspect asbestos-containing materials (ACM) and lead-containing paint, collecting bulk samples, and submitting the samples to laboratories for analyses.

PROJECT DESCRIPTION

The project consists upgrading the King Road OC (Br. No. 19-0098) at Post Mile (PM) 9.53 on Highway 80 in Placer County, California. The project location is depicted on the Vicinity Map, Figure 1, and Site Plan, Figure 2.

GENERAL OBJECTIVES

The scope of services outlined in TO-186 included the determination of the presence and quantity of asbestos and LCP at the project location prior to various improvements. Assuming that no asbestos is added during future operations, our survey would satisfy National Emissions Standards for Hazardous Air Pollutants (NESHAP) requirements. The information obtained from this investigation will be used by Caltrans for waste profiling, determining California Occupational Safety and Health Administration (Cal/OSHA) applicability, and coordinating asbestos and LCP disturbance activities.

BACKGROUND

Asbestos

The Code of Federal Regulations (CFR), 40 CFR 61, Subpart M, NESHAP and Federal Occupational Safety and Health Administration (FED OSHA) classify ACM as any material or product that contains *greater than* 1% asbestos. Nonfriable ACM is classified by NESHAP as either Category I or Category II material defined as follows:

- **Category I –** asbestos-containing packings, gaskets, resilient floor coverings, and asphalt roofing products.
- **Category II** – all remaining types of nonfriable asbestos-containing material not included in Category I that when dry, cannot be crumbled, pulverized, or reduced to powder by hand pressure.

Regulated asbestos-containing material (RACM), a hazardous waste when friable, is classified as any manufactured material that contains *greater than* 1% asbestos by dry weight *and* is:

- Friable (can be crumbled, pulverized, or reduced to powder by hand pressure); or
- Category I material that has become friable; or
- Category I material that has been subjected to sanding, grinding, cutting, or abrading; or
- Category II nonfriable material that has a high probability of becoming crumbled, pulverized, or reduced to a powder during demolition or renovation activities.

Activities that disturb materials containing *any* amount of asbestos are subject to certain requirements of the Cal/OSHA asbestos standard contained in Title 8, CCR Section 1529. Typically, removal or disturbance of more than 100 square feet of material containing more than 0.1% asbestos must be performed by a registered asbestos abatement contractor, but associated waste labeling is not required if the material contains 1% or less asbestos. When the asbestos content of a material exceeds 1%, virtually all requirements of the standard become effective.

Materials containing more than 1% asbestos are also subject to NESHAP regulations (40 CFR Part 61, Subpart M). RACM (friable ACM and nonfriable ACM that will become friable during demolition operations) must be removed from structures prior to demolition. Certain nonfriable ACM and materials containing 1% or less asbestos may remain in structures during demolition; however, there are waste handling/disposal issues and Cal/OSHA work requirements that must be addressed. Contractors are responsible for segregating and characterizing waste streams prior to disposal.

With respect to potential worker exposure, notification, and registration requirements, Cal/OSHA defines asbestos-containing construction material (ACCM) as construction material that contains more than 0.1% asbestos (Title 8, CCR 341.6).

Lead Paint

Construction activities (including demolition) that disturb materials or paints containing *any* amount of lead are subject to certain requirements of the Cal/OSHA lead standard contained in Title 8, CCR, Section 1532.1. Deteriorated paint is defined by Title 17, CCR, Division 1, Chapter 8, §35022 as a surface coating that is cracking, chalking, flaking, chipping, peeling, non-intact, failed, or otherwise separating from a substrate. Demolition of a deteriorated LCP component would require waste characterization and appropriate disposal. Intact LCP on a component is currently accepted by most landfills and recycling facilities; however, contractors are responsible for segregating and characterizing waste streams prior to disposal.

For a solid waste containing lead, the waste is classified as California hazardous when: 1) the representative total lead content equals or exceeds the respective Total Threshold Limit Concentration (TTLC) of 1,000 milligrams per kilogram (mg/kg); or 2) the representative soluble lead content equals or exceeds the respective Soluble Threshold Limit Concentration (STLC) of 5 milligrams per liter (mg/l) based on the standard Waste Extraction Test (WET). A waste has the potential for exceeding the lead STLC when the waste's representative total lead content is greater than or equal to ten times the respective STLC value since the WET uses a 1:10 dilution ratio. Hence, when total lead is detected at a concentration greater than or equal to 50 mg/kg, and assuming that 100 percent of the total lead is soluble, soluble lead analysis is required. Lead-containing waste is classified as "Resource, Conservation, and Recovery Act" (RCRA) hazardous, or Federal hazardous, when the soluble lead content equals or exceeds the Federal regulatory level of 5 mg/l based on the Toxicity Characteristic Leaching Procedure (TCLP).

The above regulatory criteria are based on chemical concentrations. Wastes may also be classified as hazardous based on other criteria such as ignitability; however, for the purposes of this investigation, toxicity (i.e., lead concentration) is the primary factor considered for waste classification since waste generated during the construction activities would not likely warrant testing for ignitability or other criteria. Waste that is classified as either California-hazardous or RCRA-hazardous requires management as a hazardous waste.

Potential hazards exist to workers who remove or cut through LCP coatings during demolition. Dust containing hazardous concentrations of lead may be generated during scraping or cutting materials coated with lead-containing paint. Torching of these materials may produce lead oxide fumes. Therefore, air monitoring and/or respiratory protection may be required during the demolition of materials coated with LCP. Guidelines regarding regulatory provisions for construction work where workers may be exposed to lead are presented in Title 8, CCR, Section 1532.1.

Architectural Drawings and Previous Survey Activities

We reviewed structure architectural plans and bridge maintenance records provided by Caltrans prior to field activities. We did not observe specifications or notes regarding the use of asbestos-containing materials or lead paint in the architectural plans and maintenance records provided. Previous asbestos survey reports were not available for our review.

SCOPE OF SERVICES

Mr. Chris Giuntoli, a California-Certified Asbestos Consultant (CAC), certification No. 02-3163 (expiration June 19, 2012), and Certified Lead Paint Inspector/Assessor and Project Monitor with the California Department of Public Health Services (DPH), certification number I-5522 (expiration June 14, 2012), performed the asbestos and LCP survey at the project location on March 23, 2012.

Asbestos

Suspect ACM were grouped into homogeneous areas with representative samples randomly collected from each. In addition, each potential ACM was evaluated for friability. A total of four bulk asbestos samples representing two suspect components were collected.

Our procedures for inspection and sampling in accordance with TO-186 are discussed below:

- Collected bulk asbestos samples after first wetting friable materials with a light mist of water. The samples were then cut from the substrate and transferred to labeled containers.

- Relinquished bulk asbestos samples to EMSL Analytical, Inc., a California-licensed and Caltrans-approved subcontractor, for asbestos analysis in accordance with United States Environmental Protection Agency (EPA) Test Method 600/R-93/116 using polarized light microscopy (PLM) under chain-of-custody protocol. EMSL Analytical, Inc. is a laboratory accredited by the National Institute of Standards and Technology National Voluntary Laboratory Accreditation Program (NIST-NVLAP) for bulk asbestos fiber analysis. The laboratory analyses were requested on a five-day turnaround time.

Approximate sample locations are presented on Figure 2. Materials represented by the samples collected are shown in the attached photographs.

Lead Paint

Three bulk paint samples were collected from suspect LCP observed at the project location. Our sampling procedures in accordance with TO-186 are discussed below:

- Collected bulk samples of suspect LCP using techniques presented in HUD guidelines. In addition, the painted areas were evaluated for evidence of deterioration such as flaking or cracking.
- Relinquished bulk LCP samples under chain-of-custody protocol to Advanced Technology Laboratories, a California-licensed and Caltrans-approved subcontractor, for lead analysis in accordance with EPA Test Method 6010B. Additionally, one sample was analyzed for TCLP lead by EPA Test Method 1311/7420. Advanced Technology Laboratories is accredited by the DPH for lead analysis. The laboratory analyses were requested on a five-day turnaround time.

Approximate sample locations are presented on Figure 2. Materials represented by the samples collected are shown in the attached photographs.

INVESTIGATIVE RESULTS

Asbestos

No asbestos was detected in samples of the suspect materials collected during our survey. Sample identification numbers, material descriptions, approximate quantities, friability assessments, and a summary of the analytical laboratory test results for asbestos are summarized below. Reproductions of the laboratory report and chain-of-custody documentation are attached.

Polarized Light Microscopy (PLM) - EPA Test Method 600/R-93/116				
Sample No.	**Description of Material**	**Approximate Quantity**	**Friable**	**Asbestos Content**
98-1A and B	Expansion joint fill material (abutments)	NA	NA	ND
98-4A and B	Expansion joint fill material (abutment bents at k-rail)	NA	NA	ND

NA = Not applicable (no asbestos detected)
ND = Not detected

Lead Paint

A sample representing approximately 100 square feet of peeling and flaking white paint on the bridge guardrails exhibited a total lead concentration of 3,400 mg/kg and a TCLP lead concentration of 4.6 mg/l.

Samples representing intact yellow and white traffic striping exhibited total lead concentrations of 4.3 mg/kg and 2.3 mg/kg, respectively.

Sample identification numbers, descriptions, peeling and flaking quantities, and a summary of the analytical laboratory test results for paint are summarized below. Reproductions of the laboratory reports and chain-of-custody documentation are attached.

Total and Soluble Lead				
Sample No.	**Paint Description**	**Approximate Quantity Peeling/Flaking**	**Total Lead (mg/kg)**	**TCLP Lead (mg/l)**
98-P1	White paint (guardrails)	100 square feet	3,400	4.6
98-P2	Yellow traffic striping	Intact	4.3	---
98-P3	White traffic striping	Intact	2.3	---

mg/kg = milligrams per kilogram (EPA Test Method 6010B)
mg/l = milligrams per liter
TCLP = Toxicity Characteristic Leaching Procedure (EPA Test Method 1311/7420)
--- = Not analyzed

RECOMMENDATIONS

Asbestos

Since no asbestos was detected in samples collected during our survey, the Cal/OSHA asbestos standard does not apply for planned activities. In addition, demolition debris would not be considered a California hazardous waste based on asbestos content. However, written notification to U.S. EPA Region IX and the California Air Resources Board is required ten working days prior to commencement of *any* demolition activity (whether asbestos is present or not).

Lead Paint

Deteriorated white paint on the bridge guardrails sampled during our survey would be classified as a California hazardous waste based on lead content.

Yellow and white traffic striping sampled during our survey would not be classified as a California hazardous waste or Federal (RCRA) waste based on lead content if stripped, blasted, or otherwise separated from the substrate.

We recommend that the deteriorated LCP on the guardrails be removed and disposed of prior to renovation, demolition, or other activities that would disturb the paint.

We recommend that the contractor be required to use personnel who have lead-related construction certification as supervisors or workers, as appropriate, from the California DPH for LCP removal work. Loose and peeling/flaking LCP require removal prior to demolition for waste segregation purposes: to separate potentially hazardous waste (Category III concentrated lead such as loose paint, paint sludge, vacuum debris, and vacuum filters) from non-hazardous demolition debris (Category II intact lead-painted architectural components). Category I waste is low lead waste (typically non-hazardous) such as construction materials, filtered wash water, and plastic sheeting. Contractors are responsible for informing the landfill of the contractor's intent to dispose of RCRA waste, California hazardous waste, and/or architectural components containing intact LCP. Some landfills may require additional waste characterization. Contractors are responsible for segregating and characterizing waste streams prior to disposal.

We recommend that all paints at the project location (graffiti, graffiti abatement, signage, etc.) be treated as lead-containing for purposes of determining the applicability of the Cal/OSHA lead standard during any future maintenance, renovation, and demolition activities. This recommendation is based on LCP sample results and the fact that lead was a common ingredient of paints manufactured before 1978 and is still an ingredient of some paints. In accordance with Title 8, CCR, Section 1532.1(p), written notification to the nearest Cal/OSHA district office is required at least 24 hours prior to certain lead-related work. Compliance and training requirements regarding construction activities where workers may be exposed to lead are presented in Title 8, CCR, Section 1532.1, subsections (e) and (l), respectively. Contractors are responsible for segregating and characterizing waste streams prior to disposal.

REPORT LIMITATIONS

The asbestos and LCP survey was conducted in conformance with generally accepted standards of practice for identifying and evaluating asbestos and LCP in structures. The survey addressed only the structure identified above. Due to the nature of structure surveys, asbestos and LCP use, and laboratory analytical limitations, some ACM or LCP at the project location may not have been identified. Spaces such as cavities, voids, crawlspaces, and pipe chases may have been concealed to our investigator. Previous renovation work may have concealed or covered spaces or materials or may have partially demolished materials and left debris in inaccessible areas. Additionally, renovation activities may have partially replaced ACM with indistinguishable non-ACM. Asbestos and/or LCP may exist in areas of the structure that were not accessible or sampled in conjunction with this TO.

During renovation or demolition operations, suspect materials may be uncovered which are different from those accessible for sampling during this assessment. Personnel in charge of renovation/demolition should be alerted to note materials uncovered during such activities that differ substantially from those included in this or previous assessment reports. If suspect ACM and/or LCP are found, additional sampling and analysis should be performed to determine if the materials contain asbestos or lead.

This report has been prepared exclusively for Caltrans. The information contained herein is only valid as of the date of the report and will require an update to reflect additional information obtained.

This report is not a comprehensive site characterization and should not be construed as such. The findings as presented in this report are predicated on the results of the limited sampling and laboratory testing performed. In addition, the information obtained is not intended to address potential impacts related to sources other than those specified herein. Therefore, the report should be deemed conclusive with respect to only the information obtained. We make no warranty, express or implied, with respect to the content of this report or any subsequent reports, correspondence or consultation. Geocon strived to perform the services summarized herein in accordance with the local standard of care in the geographic region at the time the services were rendered.

The contents of this report reflect the views of the author who is responsible for the facts and accuracy of the data presented herein. The contents do not necessarily reflect the official views or policies of the State of California or the Federal Highway Administration. This report does not constitute a standard, specification, or regulation.

Please contact us should you have any questions concerning the contents of this report or if we may be of further service.

Sincerely,

GEOCON CONSULTANTS, INC.

Chris Giuntoli, CAC
Senior Project Scientist

John E. Juhrend, PE, CEG
Project Manager

(2 + 2 CD) Addressee

Attachments: Figure 1, Vicinity Map
Figure 2, Site Plan
Site Photographs (1 through 8)
Analytical Laboratory Reports and Chain-of-custody Documentation

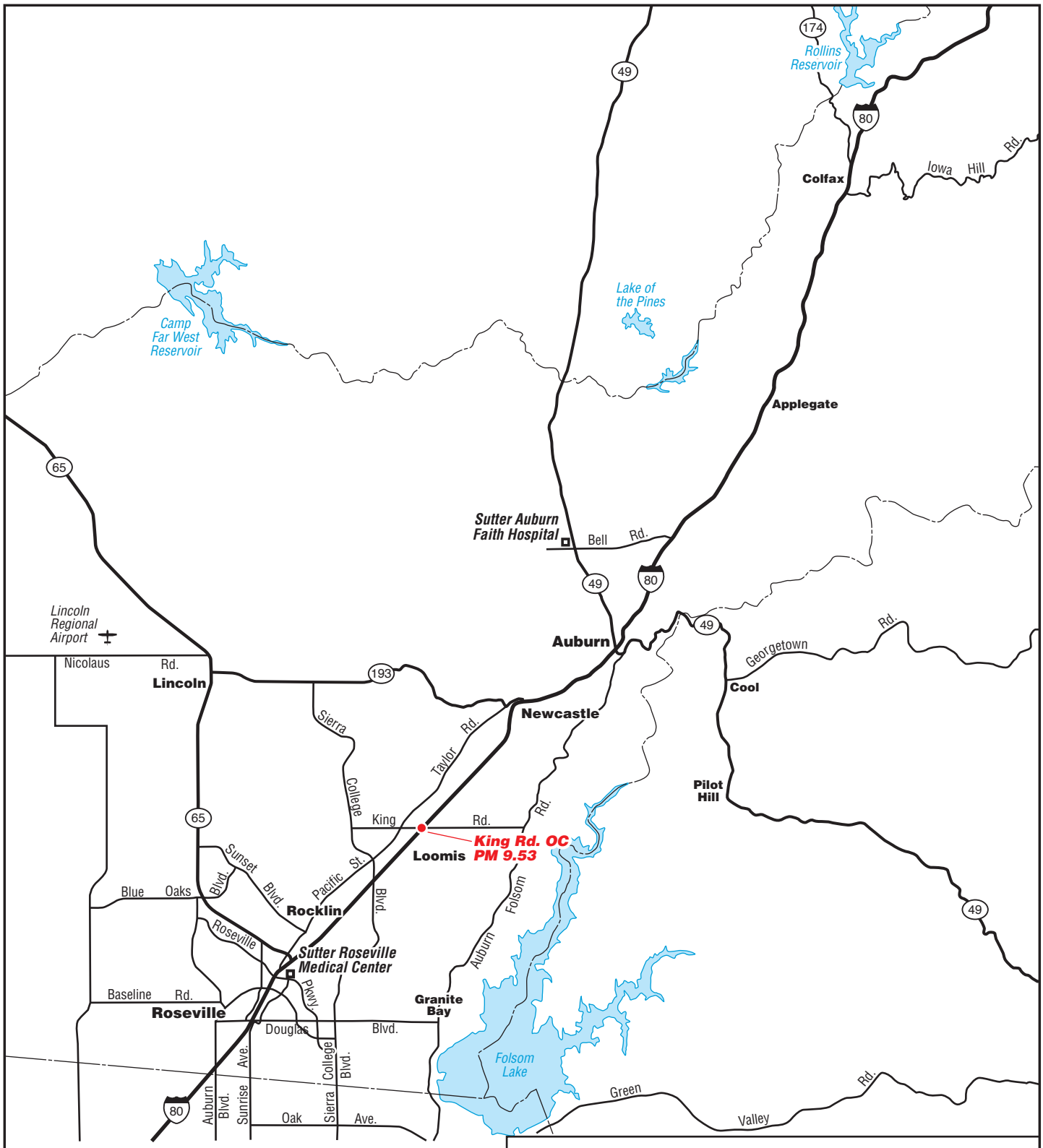

GEOCON CONSULTANTS, INC.

3160 GOLD VALLEY DR – SUITE 800 – RANCHO CORDOVA, CA 95742
PHONE 916.852.9118 – FAX 916.852.9132

King Road OC (Br. No. 19-0098)
03-PLA-80, Post Mile 9.53

Placer County, CA	**VICINITY MAP**
GEOCON Proj. No. S9300-06-186	
TO# 186, EA 03-3E1001	April 2012 — Figure 1

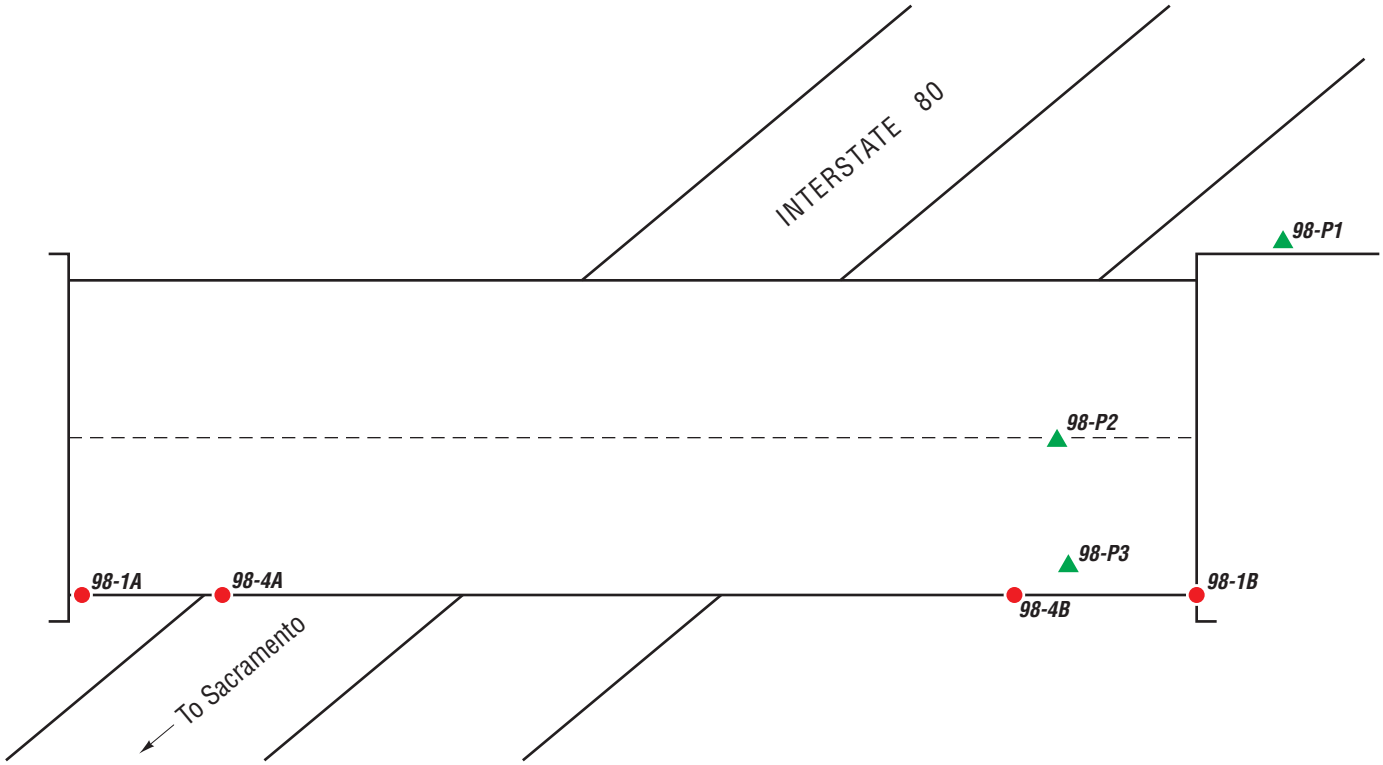

KING ROAD OC
(BR. NO. 19-0098)

N

NOT TO SCALE

LEGEND:

- ● Approximate Asbestos Sample Location
- ▲ Approximate Paint Sample Location

GEOCON
CONSULTANTS, INC.
3160 GOLD VALLEY DR – SUITE 800 – RANCHO CORDOVA, CA 95742
PHONE 916.852.9118 – FAX 916.852.9132

King Road OC (Br. No. 19-0098) 03-PLA-80, Post Mile 9.53		
Placer County, CA	**SITE PLAN**	
GEOCON Proj. No. S9300-06-186		
TO# 186, EA 03-3E1001	April 2012	Figure 2

Photo 1 – King Road OC (Br. No. 19-0098) in Placer County, CA

Photo 2 – Br. No. 19-0098 deck and barrier rails

Photo 3 – Br. No. 19-0098 abutment expansion joint fill material

GEOCON
CONSULTANTS, INC.
3160 GOLD VALLEY DR – SUITE 800 – RANCHO CORDOVA, CA 95742
PHONE 916.852.8118 – FAX 916.852.9182

PHOTOGRAPHS 1, 2, AND 3		
King Road OC (Br. No. 19-0098) 03-PLA-80 PM 9.53		
S9300-06-186	TO #186	April 2012

Photo 4 –Br. No. 19-0098 expansion joint fill material at abutment bent k-rails

Photo 5 – Br. No. 19-0098 yellow and white traffic striping

Photo 6 – Br. No. 19-0098 white guardrail paint

GEOCON
CONSULTANTS, INC.
3160 GOLD VALLEY DR – SUITE 800 – RANCHO CORDOVA, CA 95742
PHONE 916.852.9118 – FAX 916.852.9132

PHOTOGRAPHS 4, 5, AND 6		
King Road OC (Br. No. 19-0098) 03-PLA-80 PM 9.53		
S9300-06-186	TO #186	April 2012

Photo 7 –Br. No. 19-0098 typical elastomeric deck joint seal (non-suspect)

Photo 8 – Br. No. 19-0098 bearings (non-suspect)

EMSL Analytical, Inc
2235 Polvorosa Ave , Suite 230, San Leandro, CA 94577
Phone/Fax: (510) 895-3675 / (510) 895-3680
http://www.emsl.com sanleandrolab@emsl.com

EMSL Order:	091203749
CustomerID:	GCNV25
CustomerPO:	S9300-06-186
ProjectID:	S9300-06-**

Attn: **Chris Giuntoli**
Geocon Consultants, Inc.
4010 Technology Way Ste D
Carson City, NV 89706

Phone:	(775) 888-9900
Fax:	(775) 888-9904
Received:	03/26/12 8:15 AM
Analysis Date:	3/27/2012
Collected:	3/23/2012

Project: **S9300-06-186**

Test Report: Asbestos Analysis of Bulk Materials via EPA 600/R-93/116 and/or EPA 600/M4-82-020 Method(s) using Polarized Light Microscopy

			Non-Asbestos				Asbestos
Sample	**Description**	**Appearance**	**%**	**Fibrous**	**%**	**Non-Fibrous**	**% Type**
98-1A-Expansion Joint Fill Material *091203749-0001*	EXPANSION JOINT FILL MATERIAL	Brown Non-Fibrous Heterogeneous	85%	Cellulose	15%	Non-fibrous (other)	**None Detected**
98-1B-Expansion Joint Fill Material *091203749-0002*	EXPANSION JOINT FILL MATERIAL	Brown Fibrous Homogeneous	85%	Cellulose	15%	Non-fibrous (other)	**None Detected**
98-2A-Paint *091203749-0003*	YELLOW PAINT	Yellow Non-Fibrous Homogeneous			100%	Non-fibrous (other)	**None Detected**
98-2B-Paint *091203749-0004*	YELLOW PAINT	Yellow Non-Fibrous Homogeneous			100%	Non-fibrous (other)	**None Detected**
98-3A-Paint *091203749-0005*	WHITE PAINT	White Non-Fibrous Homogeneous			100%	Non-fibrous (other)	**None Detected**
98-3B-Paint *091203749-0006*	WHITE PAINT	White Non-Fibrous Homogeneous			100%	Non-fibrous (other)	**None Detected**
			Insufficient amount of black mastic available for analysis.				
98-4A-Expansion Joint Fill Material *091203749-0007*	EXPANSION JOINT FILL MATERIAL	Brown Fibrous Homogeneous	85%	Cellulose	15%	Non-fibrous (other)	**None Detected**

Analyst(s)
Matthew Batongbacal (8)

Baojia Ke, Laboratory Manager
or other approved signatory

EMSL maintains liability limited to cost of analysis. This report relates only to the samples reported and may not be reproduced, except in full, without written approval by EMSL. EMSL bears no responsibility for sample collection activities or analytical method limitations. Interpretation and use of test results are the responsibility of the client. This report must not be used by the client to claim product certification, approval, or endorsement by NVLAP, NIST or any agency of the federal government. Non-friable organically bound materials present a problem matrix and therefore EMSL recommends gravimetric reduction prior to analysis. Samples received in good condition unless otherwise noted. Estimated accuracy, precision and uncertainty data available upon request. Unless requested by the client, building materials manufactured with multiple layers (i.e. linoleum, wallboard, etc.) are reported as a single sample. None Detected = <1%
Samples analyzed by EMSL Analytical, Inc San Leandro, CA NVLAP Lab Code 101048-3, MA AA000201, WA C2007

Initial report from 03/27/2012 18:06:32

EMSL Analytical, Inc
2235 Polvorosa Ave , Suite 230, San Leandro, CA 94577
Phone/Fax: (510) 895-3675 / (510) 895-3680
http://www.emsl.com sanleandrolab@emsl.com

EMSL Order:	091203749
CustomerID:	GCNV25
CustomerPO:	S9300-06-186
ProjectID:	S9300-06-**

Attn: **Chris Giuntoli**
Geocon Consultants, Inc.
4010 Technology Way Ste D
Carson City, NV 89706

Phone:	(775) 888-9900
Fax:	(775) 888-9904
Received:	03/26/12 8:15 AM
Analysis Date:	3/27/2012
Collected:	3/23/2012

Project: **S9300-06-186**

Test Report: Asbestos Analysis of Bulk Materials via EPA 600/R-93/116 and/or EPA 600/M4-82-020 Method(s) using Polarized Light Microscopy

			Non-Asbestos				Asbestos
Sample	**Description**	**Appearance**	**%**	**Fibrous**	**%**	**Non-Fibrous**	**% Type**
98-4B-Expansion Joint Fill Material *091203749-0008*	EXPANSION JOINT FILL MATERIAL	Brown Fibrous Homogeneous	85%	Cellulose	15%	Non-fibrous (other)	**None Detected**

Analyst(s)

Matthew Batongbacal (8)

Baojia Ke, Laboratory Manager
or other approved signatory

EMSL maintains liability limited to cost of analysis. This report relates only to the samples reported and may not be reproduced, except in full, without written approval by EMSL. EMSL bears no responsibility for sample collection activities or analytical method limitations. Interpretation and use of test results are the responsibility of the client. This report must not be used by the client to claim product certification, approval, or endorsement by NVLAP, NIST or any agency of the federal government. Non-friable organically bound materials present a problem matrix and therefore EMSL recommends gravimetric reduction prior to analysis. Samples received in good condition unless otherwise noted. Estimated accuracy, precision and uncertainty data available upon request. Unless requested by the client, building materials manufactured with multiple layers (i.e. linoleum, wallboard, etc.) are reported as a single sample. None Detected = <1%
Samples analyzed by EMSL Analytical, Inc San Leandro, CA NVLAP Lab Code 101048-3, MA AA000201, WA C2007

Initial report from 03/27/2012 18:06:32

THIS IS THE LAST PAGE OF THE REPORT.

091203749

EMSL ANALYTICAL, INC.
LABORATORY • PRODUCTS • TRAINING

Asbestos Chain of Custody

EMSL Order Number *(Lab Use Only)*: 091203749

EMSL ANALYTICAL, INC.
2235 POLVOROSA DR., STE. 230
SAN LEANDRO, CA 94577
PHONE: (510) 895-3675
FAX: (510) 895-3680

Company: GEOCON	EMSL-Bill to: ☒ Same ☐ Different If Bill to is Different note instructions in Comments**
Street: 4010 TECHNOLOGY WAY, SUITE D	*Third Party Billing requires written authorization from third party*
City: CARSON CITY State/Province: NV	Zip/Postal Code: 89706 Country: US
Report To (Name): CHRIS GIUNTOLI	Fax #:
Telephone #: 775-888-9900	Email Address: GIUNTOLI@GEOCONINC.COM
Project Name/Number: 59300-06-186	
Please Provide Results: ☐ Fax ☒ Email Purchase Order:	U.S. State Samples Taken:

Turnaround Time (TAT) Options* – Please Check

☐ 3 Hour ☐ 6 Hour ☐ 24 Hour ☐ 48 Hour ☐ 72 Hour ☐ 96 Hour ☒ 1 Week ☐ 2 Week

**For TEM Air 3 hours/6 hours, please call ahead to schedule.*There is a premium charge for 3 Hour TEM AHERA or EPA Level II TAT. You will be asked to sign an authorization form for this service. Analysis completed in accordance with EMSL's Terms and Conditions located in the Analytical Price Guide.*

PCM - Air
- ☐ NIOSH 7400
- ☐ w/ OSHA 8hr. TWA

PLM - Bulk (reporting limit)
- ☒ PLM EPA 600/R-93/116 (<1%)
- ☐ PLM EPA NOB (<1%)

Point Count
- ☐ 400 (<0.25%) ☐ 1000 (<0.1%)

Point Count w/Gravimetric
- ☐ 400 (<0.25%) ☐ 1000 (<0.1%)
- ☐ NYS 198.1 (friable in NY)
- ☐ NYS 198.6 NOB (non-friable-NY)
- ☐ NIOSH 9002 (<1%)

TEM – Air ☐ **4-4.5hr TAT (AHERA only)**
- ☐ AHERA 40 CFR, Part 763
- ☐ NIOSH 7402
- ☐ EPA Level II
- ☐ ISO 10312

TEM - Bulk
- ☐ TEM EPA NOB
- ☐ NYS NOB 198.4 (non-friable-NY)
- ☐ Chatfield SOP
- ☐ TEM Mass Analysis-EPA 600 sec. 2.5

TEM – Water: EPA 100.2
- Fibers >10µm ☐ Waste ☐ Drinking
- All Fiber Sizes ☐ Waste ☐ Drinking

TEM- Dust
- ☐ Microvac - ASTM D 5755
- ☐ Wipe - ASTM D6480
- ☐ Carpet Sonication (EPA 600/J-93/167)

Soil/Rock/Vermiculite
- ☐ PLM CARB 435 - A (0.25% sensitivity)
- ☐ PLM CARB 435 - B (0.1% sensitivity)
- ☐ TEM CARB 435 - B (0.1% sensitivity)
- ☐ TEM CARB 435 - C (0.01% sensitivity)
- ☐ EPA Protocol (Semi-Quantitative)
- ☐ EPA Protocol (Quantitative)

Other:
- ☐

☐ **Check For Positive Stop – Clearly Identify Homogenous Group**

Samplers Name: CHRIS GIUNTOLI **Samplers Signature:** [signature]

Sample #	Sample Description	Volume/Area (Air) HA # (Bulk)	Date/Time Sampled
98-1A	EXPANSION JOINT FILL MATERIAL		3/23/12
98-1B	↓		↓
98-2A	YELLOW PAINT		
98-2B	↓		
98-3A	WHITE PAINT		
98-3B	↓		
98-4A	EXPANSION JOINT FILL MATERIAL		
98-4B	↓		↓

Client Sample # (s): **Total # of Samples:** 8

Relinquished (Client): [signature] **Date:** 3/24/12 **Time:** Noon

Received (Lab): [signature] **Date:** RECEIVED MAR 26 2012 **Time:** 0815

Comments/Special Instructions:
SEPARATE LAB REPORT

ADVANCED TECHNOLOGY LABORATORIES

April 03, 2012

ELAP No.: 1838
NELAP No.: 02107CA
CSDLAC No.: 10196
ORELAP No.: CA300003

Chris Giuntoli
Geocon Consultants, Inc.
4010 Technology Way, Suite D
Carson City, NV 89706
Tel: (775) 888-9900
Fax:(775) 888-9904

Re: ATL Work Order Number : 1201085
Client Reference : I-80 BRIDGES, S9300-06-186

Enclosed are the results for sample(s) received on March 27, 2012 by Advanced Technology Laboratories. The sample(s) are tested for the parameters as indicated on the enclosed chain of custody in accordance with applicable laboratory certifications. The laboratory results contained in this report specifically pertains to the sample(s) submitted.

Thank you for the opportunity to serve the needs of your company. If you have any questions, please feel free to contact me or your Project Manager.

Sincerely,

for

Eddie Rodriguez
Laboratory Director

The cover letter and the case narrative are an integral part of this analytical report and its absence renders the report invalid. The report cannot be reproduced without written permission from the client and Advanced Technology Laboratories.

Geocon Consultants, Inc.		Project Number :	I-80 BRIDGES, S9300-06-186
4010 Technology Way, Suite D		Report To :	Chris Giuntoli
Carson City , NV 89706		Reported :	04/03/2012

SUMMARY OF SAMPLES

Sample ID	Laboratory ID	Matrix	Date Sampled	Date Received
98-P1	1201085-01	Paint Chips	3/23/12 0:00	3/27/12 9:19
98-P2	1201085-02	Paint Chips	3/23/12 0:00	3/27/12 9:19
98-P3	1201085-03	Paint Chips	3/23/12 0:00	3/27/12 9:19

Geocon Consultants, Inc.		Project Number :	I-80 BRIDGES, S9300-06-186
4010 Technology Way, Suite D		Report To :	Chris Giuntoli
Carson City , NV 89706		Reported :	04/03/2012

Total Metals by ICP-AES EPA 6010B

Analyte: Lead **Analyst: KK/HF**

Laboratory ID	Client Sample ID	Result	Units	PQL	MDL	Dilution	Batch	Prepared	Date/Time Analyzed	Notes
1201085-01	98-P1	**3400**	mg/kg	2.0	NA	1	B2C0766	03/28/2012	04/03/12 12:19	
1201085-02	98-P2	**4.3**	mg/kg	2.0	NA	1	B2C0766	03/28/2012	04/03/12 12:21	
1201085-03	98-P3	**2.3**	mg/kg	2.0	NA	1	B2C0766	03/28/2012	04/03/12 13:23	

Geocon Consultants, Inc.		Project Number :	I-80 BRIDGES, S9300-06-186
4010 Technology Way, Suite D		Report To :	Chris Giuntoli
Carson City , NV 89706		Reported :	04/03/2012

QUALITY CONTROL SECTION

Total Metals by ICP-AES EPA 6010B - Quality Control

Analyte	Result (mg/kg)	PQL (mg/kg)	Spike Level	Source Result	% Rec	% Rec Limits	RPD	RPD Limit	Notes
Batch B2C0766 - EPA 3050B									
Blank (B2C0766-BLK1)					Prepared: 3/28/2012 Analyzed: 4/3/2012				
Lead	ND	1.0			NR				
LCS (B2C0766-BS1)					Prepared: 3/28/2012 Analyzed: 4/3/2012				
Lead	45	1.0	50.0		89.4	80 - 120			
Duplicate (B2C0766-DUP1)		**Source: 1201086-02**			Prepared: 3/28/2012 Analyzed: 4/3/2012				
Lead	7200	20		11000	NR		40.0	20	R
Matrix Spike (B2C0766-MS1)		**Source: 1201086-02**			Prepared: 3/28/2012 Analyzed: 4/3/2012				
Lead	5500	20	250	11000	-2070	46 - 116			M1
Matrix Spike Dup (B2C0766-MSD1)		**Source: 1201086-02**			Prepared: 3/28/2012 Analyzed: 4/3/2012				
Lead	14000	20	250	11000	1110	46 - 116	83.6	20	M1, R

Geocon Consultants, Inc.		Project Number :	I-80 BRIDGES, S9300-06-186
4010 Technology Way, Suite D		Report To :	Chris Giuntoli
Carson City , NV 89706		Reported :	04/03/2012

Notes and Definitions

R	RPD value outside acceptance criteria. Calculation is based on raw values.
M1	Matrix spike recovery outside of acceptance limit. The analytical batch was validated by the laboratory control sample.
ND	Analyte not detected at or above reporting limit
PQL	Practical Quantitation Limit
MDL	Method Detection Limit
NR	Not Reported
RPD	Relative Percent Difference

CHAIN OF CUSTODY RECORD

Advanced Technology Laboratories
3275 Walnut Avenue
Signal Hill, CA 90755
(562) 989-4045 • Fax (562) 989-4040

FOR LABORATORY USE ONLY:

P.O.#:

Logged By: Date: 3/27/12

Method of Transport: Client ☐ ATL ☐ CA OverN ☐ FEDEX ☐ Other: GSO

Sample Condition Upon Receipt:
1. CHILLED Y☐ N☑
2. HEADSPACE (VOA) Y☐ N☐
3. CONTAINER INTACT Y☐ N☐
4. SEALED Y☐ N☐
5. # OF SPLS MATCH COC Y☐ N☐
6. PRESERVED Y☐ N☐

Client: GECON
Attn: CHRIS GIUNTOLI
Address: 4010 TECHNOLOGY WAY, SUITE D
City CARSON CITY State NV Zip Code 89706
TEL: (775) 888-9800
FAX: ( )

Project Name: I-80 BRIDGES
Project #: 39300-06-186
Sampler: (Printed Name) CHRIS GIUNTOLI (Signature)

Relinquished by: (Signature and Printed Name)	Date	Time	Received by: (Signature and Printed Name)	Date	Time
	3/26/12	1200		3/27/12	9:19

I hereby authorize ATL to perform the work indicated below:
Project Mgr /Submitter: CHRIS GIUNTOLI 3/23/12 (Print Name, Date)
Signature

Send Report To: Attn: SAME Co: Address: City State Zip

Bill To: Attn: SAME Co: Address: City State Zip

Special Instructions/Comments:
*SOLUBLE LEAD MAY BE REQUESTED BASED ON TOTAL LEAD RESULTS

Sample/Records - Archival & Disposal
Unless otherwise requested by client, all samples will be disposed 45 days after receipt and records will be disposed 1 year after submittal of final report.

Storage Fees (applies when storage is requested):
- Sample : $2.00 / sample / mo (after 45 days)
- Records : $1.00 / ATL workorder / mo (after 1 year)

Circle or Add Analysis(es) Requested: 8081A (Pesticides), 8082 (PCB), 8260B (Volatiles), 8270C (BNA), 6010B (Total Metal), 8015B (GRO) / BTEX, 8015B (DRO), TOTAL LEAD*

SPECIFY APPROPRIATE MATRIX: SOIL, WATER, GROUND WATER, WASTEWATER, PAINT CHIPS

QA/QC: RTNE ☐ CT ☐ SWRCB ☐ Logcode ____ OTHER ____

ITEM	LAB USE ONLY: Batch #: / Lab No.	Sample Description: Sample I.D. / Location	Date	Time	8015B (DRO)	TOTAL LEAD*	PAINT CHIPS	TAT	Container(s) #	Type	PRESERVATION	REMARKS
	1201085-01	98-P1	3/23/12			X	X	5-DAY	1	PB		
	2	98-P2	↓			↓	↓	↓	↓	↓		
	3	98-P3	↓			↓	↓	↓	↓	↓		

• TAT starts 8 a.m. following day if samples received after 3 p.m.

TAT: A= Overnight ≤ 24 hr; B= Emergency Next workday; C= Critical 2 Workdays; D= Urgent 3 Workdays; E= Routine 7 Workdays

Container Types: T=Tube V=VOA L=Liter P=Pint J=Jar B=Tedlar G=Glass P=Plastic M=Metal

Preservatives: H=HCl N=HNO_3 S=H_2SO_4 C=4°C Z=$Zn(AC)_2$ O=NaOH T=$Na_2S_2O_3$

DISTRIBUTION: White with report Yellow to folder Pink to submitter

ADVANCED TECHNOLOGY LABORATORIES

April 11, 2012

ELAP No.: 1838
NELAP No.: 02107CA
CSDLAC No.: 10196
ORELAP No.: CA300003

Chris Giuntoli
Geocon Consultants, Inc.
4010 Technology Way, Suite D
Carson City, NV 89706
Tel: (775) 888-9900
Fax:(775) 888-9904

Re: ATL Work Order Number : 1201085
Client Reference : I-80 BRIDGES, S9300-06-186

Enclosed are the results for sample(s) received on March 27, 2012 by Advanced Technology Laboratories. The sample(s) are tested for the parameters as indicated on the enclosed chain of custody in accordance with applicable laboratory certifications. The laboratory results contained in this report specifically pertains to the sample(s) submitted.

Thank you for the opportunity to serve the needs of your company. If you have any questions, please feel free to contact me or your Project Manager.

Sincerely,

Eddie Rodriguez
Laboratory Director

The cover letter and the case narrative are an integral part of this analytical report and its absence renders the report invalid. The report cannot be reproduced without written permission from the client and Advanced Technology Laboratories.

Geocon Consultants, Inc.		Project Number :	I-80 BRIDGES, S9300-06-186
4010 Technology Way, Suite D		Report To :	Chris Giuntoli
Carson City , NV 89706		Reported :	04/11/2012

SUMMARY OF SAMPLES

Sample ID	Laboratory ID	Matrix	Date Sampled	Date Received
98-P1	1201085-01	Paint Chips	3/23/12 0:00	3/27/12 9:19

Geocon Consultants, Inc.		Project Number :	I-80 BRIDGES, S9300-06-186
4010 Technology Way, Suite D		Report To :	Chris Giuntoli
Carson City , NV 89706		Reported :	04/11/2012

TCLP Lead by AA (Direct Aspiration) EPA 7420

Analyte: Lead **Analyst: VV**

Laboratory ID	Client Sample ID	Result	Units	PQL	MDL	Dilution	Batch	Prepared	Date/Time Analyzed	Notes
1201085-01	98-P1	**4.6**	mg/L	0.50	NA	1	B2D0346	04/10/2012	04/10/12 13:59	

Geocon Consultants, Inc.	Project Number : I-80 BRIDGES, S9300-06-186
4010 Technology Way, Suite D	Report To : Chris Giuntoli
Carson City , NV 89706	Reported : 04/11/2012

QUALITY CONTROL SECTION

TCLP Lead by AA (Direct Aspiration) EPA 7420 - Quality Control

Analyte	Result (mg/L)	PQL (mg/L)	Spike Level	Source Result	% Rec	% Rec Limits	RPD	RPD Limit	Notes
Batch B2D0346 - EPA 3010A									
Blank (B2D0346-BLK1)					Prepared: 4/10/2012 Analyzed: 4/10/2012				
Lead	ND	0.50			NR				
Blank (B2D0346-BLK2)					Prepared: 4/10/2012 Analyzed: 4/10/2012				
Lead	ND	0.50			NR				
Blank (B2D0346-BLK3)					Prepared: 4/10/2012 Analyzed: 4/10/2012				
Lead	ND	0.50			NR				
Blank (B2D0346-BLK4)					Prepared: 4/10/2012 Analyzed: 4/10/2012				
Lead	ND	0.50			NR				
LCS (B2D0346-BS1)					Prepared: 4/10/2012 Analyzed: 4/10/2012				
Lead	1.0	0.50	1.00		101	80 - 120			
Duplicate (B2D0346-DUP1)		**Source: 1201166-31**			Prepared: 4/10/2012 Analyzed: 4/10/2012				
Lead	0.37	0.50		0.34	NR		7.75	20	
Duplicate (B2D0346-DUP2)		**Source: 1201166-30**			Prepared: 4/10/2012 Analyzed: 4/10/2012				
Lead	0.48	0.50		0.37	NR		25.6	20	M1
Matrix Spike (B2D0346-MS1)		**Source: 1201166-31**			Prepared: 4/10/2012 Analyzed: 4/10/2012				
Lead	3.2	0.50	2.50	0.34	114	80 - 120			
Matrix Spike (B2D0346-MS2)		**Source: 1201166-30**			Prepared: 4/10/2012 Analyzed: 4/10/2012				
Lead	3.4	0.50	2.50	0.37	121	80 - 120			M1
Matrix Spike (B2D0346-MS3)		**Source: 1201083-01**			Prepared: 4/10/2012 Analyzed: 4/10/2012				
Lead	13		5.00	6.6	126	80 - 120			M1
Matrix Spike Dup (B2D0346-MSD1)		**Source: 1201166-31**			Prepared: 4/10/2012 Analyzed: 4/10/2012				
Lead	3.4	0.50	2.50	0.34	121	80 - 120	5.43	20	M1
Batch S2D0145 - B2D0346									
Instrument Blank (S2D0145-IBL1)					Prepared: 4/10/2012 Analyzed: 4/10/2012				
Lead	ND	0.50			NR				

Geocon Consultants, Inc.		Project Number :	I-80 BRIDGES, S9300-06-186
4010 Technology Way, Suite D		Report To :	Chris Giuntoli
Carson City , NV 89706		Reported :	04/11/2012

Notes and Definitions

M1	Matrix spike recovery outside of acceptance limit. The analytical batch was validated by the laboratory control sample.
ND	Analyte not detected at or above reporting limit
PQL	Practical Quantitation Limit
MDL	Method Detection Limit
NR	Not Reported
RPD	Relative Percent Difference

Diane Galvan

From: Chris Giuntoli [giuntoli@geoconinc.com]
Sent: Wednesday, April 04, 2012 2:40 PM
To: Diane Galvan
Subject: RE: Results/EDD/Invoice - I-80 BRIDGES (1201085)

Hi Diane,

For Work Order 1201085, please run TCLP lead for sample 98-P1 on a 5-day TAT.

Thanks,
Chris

Project No. S9300-06-186
April 30, 2012

Alicia Beyer, Task Order Manager
Caltrans District 3
Environmental Engineering Office
703 B Street
Marysville, California 95901

Subject: ASBESTOS AND LEAD-CONTAINING PAINT SURVEY REPORT
PENRYN ROAD OC (BR. NO. 19-0099)
03-PLA-80, POST MILE 10.35
PLACER COUNTY, CA
CONTRACT NO. 03A1368, E-FIS 0300000473.1 (EA 03-3E1001)
TASK ORDER NO. 186

Dear Ms. Beyer:

In accordance with California Department of Transportation Contract No. 03A1368 and Task Order No. 186 (TO-186), we have performed an asbestos and lead-containing paint (LCP) survey of the subject bridge in Placer County, California. The scope of services included surveying the bridge for suspect asbestos-containing materials (ACM) and lead-containing paint, collecting bulk samples, and submitting the samples to a laboratory for analyses.

PROJECT DESCRIPTION

The project consists of upgrading the Penryn Road OC (Br. No. 19-0099) at Post Mile (PM) 10.35 on Highway 80 in Placer County, California. The project location is depicted on the Vicinity Map, Figure 1, and Site Plan, Figure 2.

GENERAL OBJECTIVES

The scope of services outlined in TO-186 included the determination of the presence and quantity of asbestos and LCP at the project location prior to various improvements. Assuming that no asbestos is added during future operations, our survey would satisfy National Emissions Standards for Hazardous Air Pollutants (NESHAP) requirements. The information obtained from this investigation will be used by Caltrans for waste profiling, determining California Occupational Safety and Health Administration (Cal/OSHA) applicability, and coordinating asbestos and LCP disturbance activities.

BACKGROUND

Asbestos

The Code of Federal Regulations (CFR), 40 CFR 61, Subpart M, NESHAP and Federal Occupational Safety and Health Administration (FED OSHA) classify ACM as any material or product that contains *greater than* 1% asbestos. Nonfriable ACM is classified by NESHAP as either Category I or Category II material defined as follows:

- **Category I –** asbestos-containing packings, gaskets, resilient floor coverings, and asphalt roofing products.
- **Category II** – all remaining types of nonfriable asbestos-containing material not included in Category I that when dry, cannot be crumbled, pulverized, or reduced to powder by hand pressure.

Regulated asbestos-containing material (RACM), a hazardous waste when friable, is classified as any manufactured material that contains *greater than* 1% asbestos by dry weight *and* is:

- Friable (can be crumbled, pulverized, or reduced to powder by hand pressure); or
- Category I material that has become friable; or
- Category I material that has been subjected to sanding, grinding, cutting, or abrading; or
- Category II nonfriable material that has a high probability of becoming crumbled, pulverized, or reduced to a powder during demolition or renovation activities.

Activities that disturb materials containing *any* amount of asbestos are subject to certain requirements of the Cal/OSHA asbestos standard contained in Title 8, CCR Section 1529. Typically, removal or disturbance of more than 100 square feet of material containing more than 0.1% asbestos must be performed by a registered asbestos abatement contractor, but associated waste labeling is not required if the material contains 1% or less asbestos. When the asbestos content of a material exceeds 1%, virtually all requirements of the standard become effective.

Materials containing more than 1% asbestos are also subject to NESHAP regulations (40 CFR Part 61, Subpart M). RACM (friable ACM and nonfriable ACM that will become friable during demolition operations) must be removed from structures prior to demolition. Certain nonfriable ACM and materials containing 1% or less asbestos may remain in structures during demolition; however, there are waste handling/disposal issues and Cal/OSHA work requirements that must be addressed. Contractors are responsible for segregating and characterizing waste streams prior to disposal.

With respect to potential worker exposure, notification, and registration requirements, Cal/OSHA defines asbestos-containing construction material (ACCM) as construction material that contains more than 0.1% asbestos (Title 8, CCR 341.6).

Lead Paint

Construction activities (including demolition) that disturb materials or paints containing *any* amount of lead are subject to certain requirements of the Cal/OSHA lead standard contained in Title 8, CCR, Section 1532.1. Deteriorated paint is defined by Title 17, CCR, Division 1, Chapter 8, §35022 as a surface coating that is cracking, chalking, flaking, chipping, peeling, non-intact, failed, or otherwise separating from a substrate. Demolition of a deteriorated LCP component would require waste characterization and appropriate disposal. Intact LCP on a component is currently accepted by most landfills and recycling facilities; however, contractors are responsible for segregating and characterizing waste streams prior to disposal.

For a solid waste containing lead, the waste is classified as California hazardous when: 1) the representative total lead content equals or exceeds the respective Total Threshold Limit Concentration (TTLC) of 1,000 milligrams per kilogram (mg/kg); or 2) the representative soluble lead content equals or exceeds the respective Soluble Threshold Limit Concentration (STLC) of 5 milligrams per liter (mg/l) based on the standard Waste Extraction Test (WET). A waste has the potential for exceeding the lead STLC when the waste's representative total lead content is greater than or equal to ten times the respective STLC value since the WET uses a 1:10 dilution ratio. Hence, when total lead is detected at a concentration greater than or equal to 50 mg/kg, and assuming that 100 percent of the total lead is soluble, soluble lead analysis is required. Lead-containing waste is classified as "Resource, Conservation, and Recovery Act" (RCRA) hazardous, or Federal hazardous, when the soluble lead content equals or exceeds the Federal regulatory level of 5 mg/l based on the Toxicity Characteristic Leaching Procedure (TCLP).

The above regulatory criteria are based on chemical concentrations. Wastes may also be classified as hazardous based on other criteria such as ignitability; however, for the purposes of this investigation, toxicity (i.e., lead concentration) is the primary factor considered for waste classification since waste generated during the construction activities would not likely warrant testing for ignitability or other criteria. Waste that is classified as either California-hazardous or RCRA-hazardous requires management as a hazardous waste.

Potential hazards exist to workers who remove or cut through LCP coatings during demolition. Dust containing hazardous concentrations of lead may be generated during scraping or cutting materials coated with lead-containing paint. Torching of these materials may produce lead oxide fumes. Therefore, air monitoring and/or respiratory protection may be required during the demolition of materials coated with LCP. Guidelines regarding regulatory provisions for construction work where workers may be exposed to lead are presented in Title 8, CCR, Section 1532.1.

Architectural Drawings and Previous Survey Activities

We reviewed structure architectural plans provided by Caltrans prior to field activities. We did not observe specifications or notes regarding the use of asbestos-containing materials or lead paint in the architectural plans provided. Previous asbestos survey reports were not available for our review. We reviewed our prior survey report titled, *Asbestos-Containing Materials and Lead-Containing Paint Survey, Interstate 80 Post Mile 0.3 to 29.3, Placer County, California*, dated August 19, 2010, (2010 Survey Report), executed under TO-134, for information pertaining to previous survey results for the Penryn Road OC. Asbestos and LCP samples results presented in our 2010 Survey Report are summarized in the Investigative Results section below.

SCOPE OF SERVICES

Mr. Chris Giuntoli, a California-Certified Asbestos Consultant (CAC), certification No. 02-3163 (expiration June 19, 2012), and Certified Lead Paint Inspector/Assessor and Project Monitor with the California Department of Public Health Services (DPH), certification number I-5522 (expiration June 14, 2012), performed the asbestos and LCP survey at the project location on March 23, 2012.

Asbestos

Suspect ACM were grouped into homogeneous areas with representative samples randomly collected from each. In addition, each potential ACM was evaluated for friability. A total of four bulk asbestos samples representing two suspect components were collected.

Our procedures for inspection and sampling in accordance with TO-186 are discussed below:

- Collected bulk asbestos samples after first wetting friable materials with a light mist of water. The samples were then cut from the substrate and transferred to labeled containers.
- Relinquished bulk asbestos samples to EMSL Analytical, Inc., a California-licensed and Caltrans-approved subcontractor, for asbestos analysis in accordance with United States Environmental Protection Agency (EPA) Test Method 600/R-93/116 using polarized light microscopy (PLM) under chain-of-custody protocol. EMSL Analytical, Inc. is a laboratory accredited by the National Institute of Standards and Technology National Voluntary Laboratory Accreditation Program (NIST-NVLAP) for bulk asbestos fiber analysis. The laboratory analyses were requested on a five-day turnaround time.

Approximate sample locations are presented on Figure 2. Materials represented by the samples collected are shown in the attached photographs.

Lead Paint

Based on the LCP results presented in our 2010 Survey Report, additional bulk paint samples were not collected from the bridge structure for lead analysis during our current survey. Materials represented by the samples collected during our 2010 survey are shown in the attached photographs.

INVESTIGATIVE RESULTS

Asbestos

Chrysotile asbestos at a concentration of 80% was detected in samples representing approximately 100 square feet of nonfriable sheet packing at the abutment bent/k-rail joints (see attached photographs). No asbestos was detected in samples of the remaining suspect material collected during our current survey. Sample identification numbers, material descriptions, approximate quantities, friability assessments, and a summary of the analytical laboratory test results for asbestos are summarized below.

Asbestos was not detected in samples of expansion joint fill material collected during our 2010 survey of the bridge structure. Reproductions of our 2010 Survey Report, and the laboratory report and chain-of-custody documentation are attached.

Polarized Light Microscopy (PLM) - EPA Test Method 600/R-93/116				
Sample No.	**Description of Material**	**Approximate Quantity**	**Friable**	**Asbestos Content**
99-3A and B	**Sheet packing (abutment bents at k-rail)**	**100 square feet**	**No**	**80%**
99-4A and B	Expansion joint fill material (abutment bents at k-rail)	NA	NA	ND

NA = Not applicable (no asbestos detected)
ND = Not detected

Lead Paint

Descriptions, peeling and flaking quantities, and a summary of the analytical laboratory test results for paint samples collected during our 2010 survey, executed under TO-134, are summarized below. A reproduction of our 2010 Survey Report is attached.

Total and Soluble Lead			
Paint Description	**Approximate Quantity Peeling/Flaking**	**Total Lead (mg/kg)**	**TCLP Lead (mg/l)**
White traffic striping	Intact	12	---
Yellow traffic striping	Intact	50,000	3.2
White guardrail paint	80 square feet	7,500	58

TCLP = Toxicity Characteristic Leaching Procedure (EPA Test Method 1311/7420)
mg/kg = milligrams per kilogram (EPA Test Method 6010B)
mg/l = milligrams per liter
--- = Not analyzed

RECOMMENDATIONS

Asbestos

NESHAP regulations do not require that asbestos-containing sheet packing (a Category I nonfriable/nonhazardous material) identified during our survey be removed prior to demolition or be treated as hazardous waste. However, the disturbance of the material is still covered by the Cal/OSHA asbestos standard (Title 8, CCR Section 1529).

We recommend that a licensed contractor registered with Cal/OSHA for asbestos-related work perform any activities that would *disturb* the asbestos-containing material identified during our survey. Contractors are responsible for informing the landfill of the contractor's intent to dispose of asbestos waste. Some landfills and recycling facilities may require additional waste characterization. Contractors are responsible for segregating and characterizing waste streams prior to disposal.

Geocon also recommends the notification of contractors (that will be conducting renovation, demolition, or related activities) of the presence of asbestos in their work areas (i.e., provide contractor[s] with a copy of this report and a list of asbestos removed during subsequent activities). Contractors not trained for asbestos work should be instructed not to disturb asbestos during their activities.

Written notification to U.S. EPA Region IX and the California Air Resources Board is required ten working days prior to commencement of *any* demolition activity (whether asbestos is present or not). In accordance with Title 8, CCR 341.9, written notification to the nearest Cal/OSHA district office is required at least 24 hours prior to certain asbestos-related work.

Lead Paint

Yellow traffic striping sampled during our 2010 survey would be classified as California hazardous waste based on lead content if stripped, blasted, or otherwise separated from the substrate.
Deteriorated white paint on the bridge guardrails sampled during our 2010 survey would be classified as California and Federal (RCRA) hazardous waste based on lead content.

White traffic striping sampled during our 2010 survey would not be classified as a California hazardous waste or Federal (RCRA) waste based on lead content if stripped, blasted, or otherwise separated from the substrate.

We recommend that the deteriorated LCP on the guardrails be removed and disposed of prior to renovation, demolition, or other activities that would disturb the paint.

We recommend that the contractor be required to use personnel who have lead-related construction certification as supervisors or workers, as appropriate, from the California DPH for LCP removal work. Loose and peeling/flaking LCP require removal prior to demolition for waste segregation purposes: to separate potentially hazardous waste (Category III concentrated lead such as loose paint, paint sludge, vacuum debris, and vacuum filters) from non-hazardous demolition debris (Category II intact lead-painted architectural components). Category I waste is low lead waste (typically non-hazardous) such as construction materials, filtered wash water, and plastic sheeting. Contractors are responsible for informing the landfill of the contractor's intent to dispose of RCRA waste, California hazardous waste, and/or architectural components containing intact LCP. Some landfills may require additional waste characterization. Contractors are responsible for segregating and characterizing waste streams prior to disposal.

We recommend that all paints at the project location (graffiti, graffiti abatement, signage, etc.) be treated as lead-containing for purposes of determining the applicability of the Cal/OSHA lead standard during any future maintenance, renovation, and demolition activities. This recommendation is based on LCP sample results and the fact that lead was a common ingredient of paints manufactured before 1978 and is still an ingredient of some paints. In accordance with Title 8, CCR, Section 1532.1(p), written notification to the nearest Cal/OSHA district office is required at least 24 hours prior to certain lead-related work. Compliance and training requirements regarding construction activities where workers may be exposed to lead are presented in Title 8, CCR, Section 1532.1, subsections (e) and (l), respectively. Contractors are responsible for segregating and characterizing waste streams prior to disposal.

REPORT LIMITATIONS

The asbestos and LCP survey was conducted in conformance with generally accepted standards of practice for identifying and evaluating asbestos and LCP in structures. The survey addressed only the structure identified above. Due to the nature of structure surveys, asbestos and LCP use, and laboratory analytical limitations, some ACM or LCP at the project location may not have been identified. Spaces such as cavities, voids, crawlspaces, and pipe chases may have been concealed to our investigator. Previous renovation work may have concealed or covered spaces or materials or may have partially demolished materials and left debris in inaccessible areas. Additionally, renovation activities may have partially replaced ACM with indistinguishable non-ACM. Asbestos and/or LCP may exist in areas of the structure that were not accessible or sampled in conjunction with this TO.

During renovation or demolition operations, suspect materials may be uncovered which are different from those accessible for sampling during this assessment. Personnel in charge of renovation/demolition should be alerted to note materials uncovered during such activities that differ substantially from those included in this or previous assessment reports. If suspect ACM and/or LCP are found, additional sampling and analysis should be performed to determine if the materials contain asbestos or lead.

This report has been prepared exclusively for Caltrans. The information contained herein is only valid as of the date of the report and will require an update to reflect additional information obtained.

This report is not a comprehensive site characterization and should not be construed as such. The findings as presented in this report are predicated on the results of the limited sampling and laboratory testing performed. In addition, the information obtained is not intended to address potential impacts related to sources other than those specified herein. Therefore, the report should be deemed conclusive with respect to only the information obtained. We make no warranty, express or implied, with respect to the content of this report or any subsequent reports, correspondence or consultation. Geocon strived to perform the services summarized herein in accordance with the local standard of care in the geographic region at the time the services were rendered.

The contents of this report reflect the views of the author who is responsible for the facts and accuracy of the data presented herein. The contents do not necessarily reflect the official views or policies of the State of California or the Federal Highway Administration. This report does not constitute a standard, specification, or regulation.

Please contact us should you have any questions concerning the contents of this report or if we may be of further service.

Sincerely,

GEOCON CONSULTANTS INC.

Chris Giuntoli, CAC
Senior Project Scientist

John E. Juhrend, PE, CEG
Project Manager

(2 + 2 CD) Addressee

Attachments:
Figure 1, Vicinity Map
Figure 2, Site Plan
Site Photographs (1 through 9)
Analytical Laboratory Report and Chain-of-custody Documentation
Geocon 2010 Survey Report

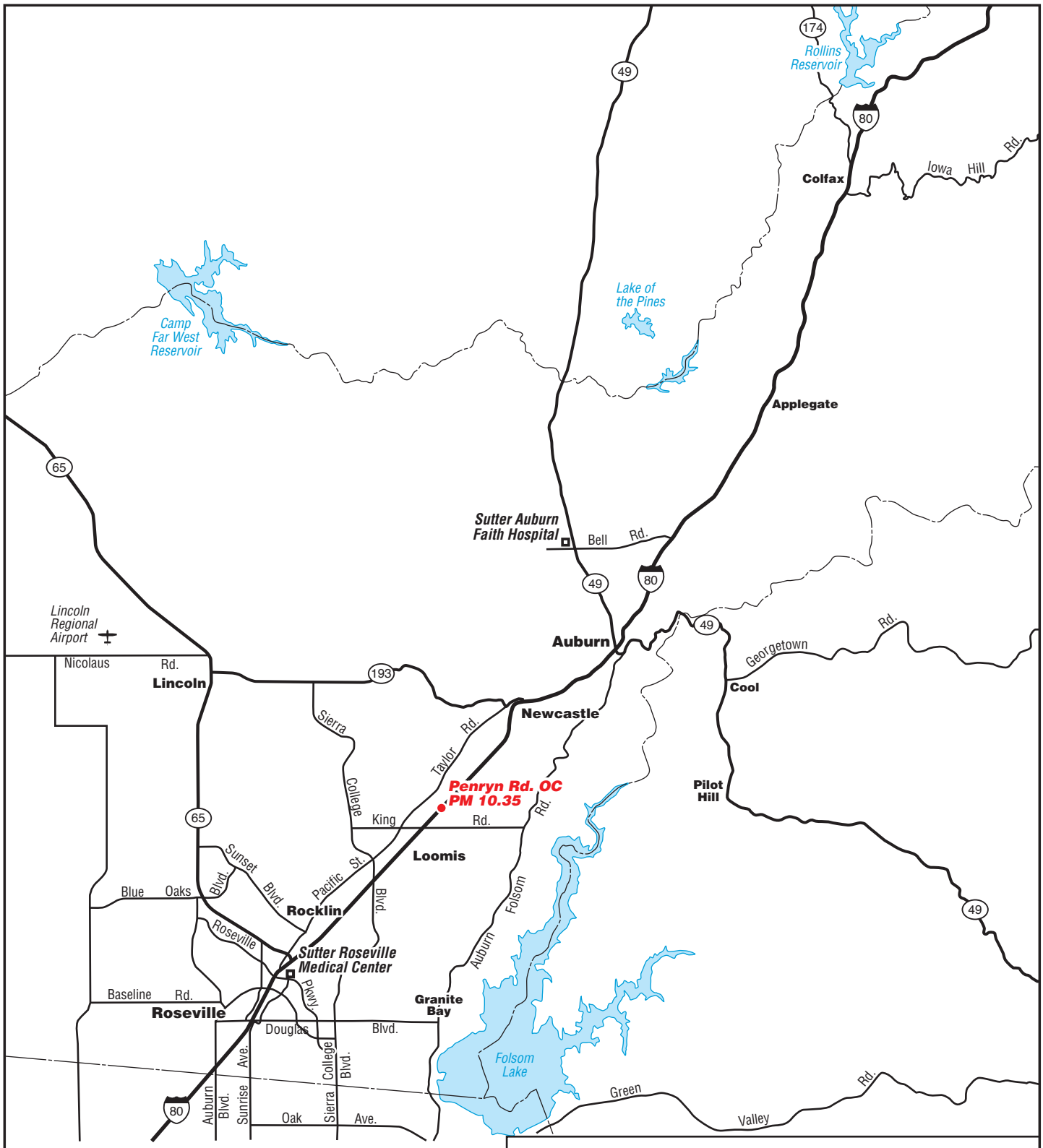

GEOCON CONSULTANTS, INC.

3160 GOLD VALLEY DR – SUITE 800 – RANCHO CORDOVA, CA 95742
PHONE 916.852.9118 – FAX 916.852.9132

Penryn Road OC (Br. No. 19-0099)
03-PLA-80, Post Mile 10.35

Placer County, CA	**VICINITY MAP**
GEOCON Proj. No. S9300-06-186	
TO# 186, EA 03-3E1001	April 2012 — Figure 1

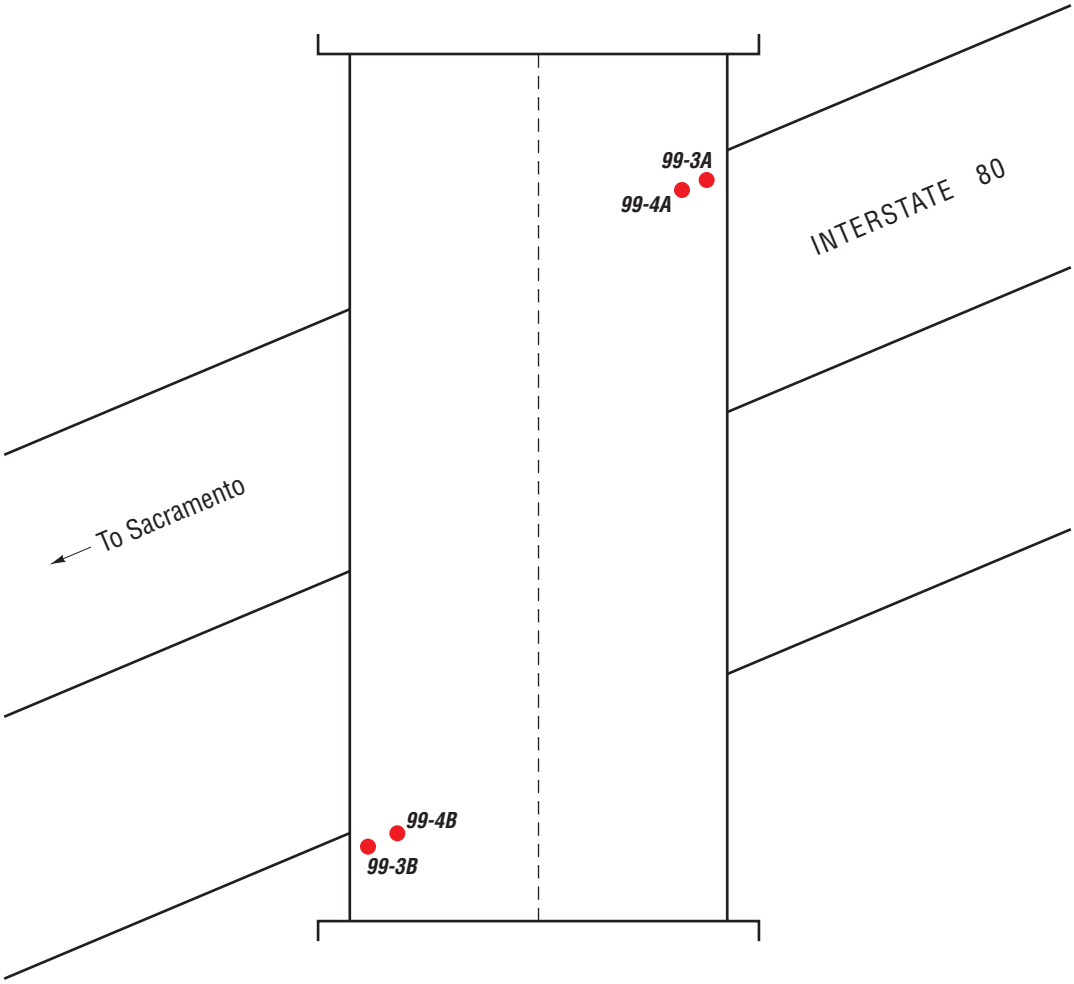

PENRYN ROAD OC
(BR. NO. 19-0099)

NOT TO SCALE

LEGEND:

- Approximate Asbestos Sample Location

GEOCON
CONSULTANTS, INC.
3160 GOLD VALLEY DR – SUITE 800 – RANCHO CORDOVA, CA 95742
PHONE 916.852.9118 – FAX 916.852.9132

Penryn Road OC (Br. No. 19-0099) 03-PLA-80, Post Mile 10.35		
Placer County, CA	**SITE PLAN**	
GEOCON Proj. No. S9300-06-186		
TO# 186, EA 03-3E1001	April 2012	Figure 2

Photo 1 – Penryn Road OC (Br. No. 19-0099) in Placer County, CA

Photo 2 – Br. No. 19-0099 deck and barrier rails

Photo 3 – Br. No. 19-0099 abutment expansion joint fill material

GEOCON
CONSULTANTS, INC.
3160 GOLD VALLEY DR – SUITE 800 – RANCHO CORDOVA, CA 95742
PHONE 916.852.9118 – FAX 916.852.9132

PHOTOGRAPHS 1, 2, AND 3		
Penryn Road OC (Br. No. 19-0099) 03-PLA-80 PM 10.35		
S9300-06-186	TO #186	April 2012

Photo 4 – Br. No. 19-0099 expansion joint fill material and asbestos-containing sheet packing at abutment bent k-rails

Photo 5 – Br. No. 19-0099 yellow and white traffic striping

Photo 6 – Br. No. 19-0099 white guardrail paint

Photo 7 – Br. No. 19-0099 typical elastomeric deck joint seal (non-suspect)

Photo 8 – Br. No. 19-0099 elastomeric deck expansion joint fill material (non-suspect)

Photo 9 – Br. No. 19-0099 bearings (non-suspect)

EMSL Analytical, Inc
2235 Polvorosa Ave , Suite 230, San Leandro, CA 94577
Phone/Fax: (510) 895-3675 / (510) 895-3680
http://www.emsl.com sanleandrolab@emsl.com

EMSL Order:	091203748
CustomerID:	GCNV25
CustomerPO:	S9300-06-186
ProjectID:	S9300-06-**

Attn: **Chris Giuntoli**
Geocon Consultants, Inc.
4010 Technology Way Ste D
Carson City, NV 89706

Phone:	(775) 888-9900
Fax:	(775) 888-9904
Received:	03/26/12 8:15 AM
Analysis Date:	3/27/2012
Collected:	3/23/2012

Project: **S9300-06-186**

Test Report: Asbestos Analysis of Bulk Materials via EPA 600/R-93/116 and/or EPA 600/M4-82-020 Method(s) using Polarized Light Microscopy

			Non-Asbestos				Asbestos
Sample	**Description**	**Appearance**	**%**	**Fibrous**	**%**	**Non-Fibrous**	**% Type**
99-1A- Paint *091203748-0001*	YELLOW PAINT	Yellow Non-Fibrous Homogeneous			100%	Non-fibrous (other)	**None Detected**
99-1B- Paint *091203748-0002*	YELLOW PAINT	Yellow Non-Fibrous Homogeneous			100%	Non-fibrous (other)	**None Detected**
99-2A- Paint *091203748-0003*	WHITE PAINT	White Non-Fibrous Homogeneous			100%	Non-fibrous (other)	**None Detected**
99-2B- Paint *091203748-0004*	WHITE PAINT	White Non-Fibrous Homogeneous			100%	Non-fibrous (other)	**None Detected**
99-3A-Shim Material *091203748-0005*	SHIM MATERIAL	Gray Fibrous Homogeneous			20%	Non-fibrous (other)	**80% Chrysotile**
99-3B-Shim Material *091203748-0006*	SHIM MATERIAL	Gray Fibrous Homogeneous			20%	Non-fibrous (other)	**80% Chrysotile**
99-4A-Expansion Joint *091203748-0007*	EXPANSION JOINT FILL MATERIAL	Brown Fibrous Homogeneous	85%	Cellulose	15%	Non-fibrous (other)	**None Detected**
99-4B-Expansion Joint *091203748-0008*	EXPANSION JOINT FILL MATERIAL	Brown Fibrous Homogeneous	85%	Cellulose	15%	Non-fibrous (other)	**None Detected**

Analyst(s)
Matthew Batongbacal (8)

Baojia Ke, Laboratory Manager
or other approved signatory

EMSL maintains liability limited to cost of analysis. This report relates only to the samples reported and may not be reproduced, except in full, without written approval by EMSL. EMSL bears no responsibility for sample collection activities or analytical method limitations. Interpretation and use of test results are the responsibility of the client. This report must not be used by the client to claim product certification, approval, or endorsement by NVLAP, NIST or any agency of the federal government. Non-friable organically bound materials present a problem matrix and therefore EMSL recommends gravimetric reduction prior to analysis. Samples received in good condition unless otherwise noted. Estimated accuracy, precision and uncertainty data available upon request. Unless requested by the client, building materials manufactured with multiple layers (i.e. linoleum, wallboard, etc.) are reported as a single sample. None Detected = <1%
Samples analyzed by EMSL Analytical, Inc San Leandro, CA NVLAP Lab Code 101048-3, MA AA000201, WA C2007

Initial report from 03/27/2012 13:44:05

THIS IS THE LAST PAGE OF THE REPORT.

091203748

EMSL ANALYTICAL, INC.
LABORATORY • PRODUCTS • TRAINING

Asbestos Chain of Custody

EMSL Order Number (*Lab Use Only*): 091203748

EMSL ANALYTICAL, INC.
2235 POLVOROSA DR., STE. 230
SAN LEANDRO, CA 94577
PHONE: (510) 895-3675
FAX: (510) 895-3680

Company : GEOCON	EMSL-Bill to: ☒ Same ☐ Different If Bill to is Different note instructions in Comments**
Street: 4010 TECHNOLOGY WAY, D	*Third Party Billing requires written authorization from third party*
City: CARSON CITY State/Province: NV	Zip/Postal Code: 89706 Country: US
Report To (Name): CHRIS GIUNTOLI	Fax #:
Telephone #: 775-888-9900	Email Address: GIUNTOLI@GEOCONINC.COM
Project Name/Number: 59800-06-186	
Please Provide Results: ☐ Fax ☒ Email	Purchase Order: U.S. State Samples Taken:

Turnaround Time (TAT) Options* – Please Check

☐ 3 Hour ☐ 6 Hour ☐ 24 Hour ☐ 48 Hour ☐ 72 Hour ☐ 96 Hour ☒ 1 Week ☐ 2 Week

**For TEM Air 3 hours/6 hours, please call ahead to schedule.*There is a premium charge for 3 Hour TEM AHERA or EPA Level II TAT. You will be asked to sign an authorization form for this service. Analysis completed in accordance with EMSL's Terms and Conditions located in the Analytical Price Guide.*

PCM - Air
- ☐ NIOSH 7400
- ☐ w/ OSHA 8hr. TWA

PLM - Bulk (reporting limit)
- ☒ PLM EPA 600/R-93/116 (<1%)
- ☐ PLM EPA NOB (<1%)

Point Count
- ☐ 400 (<0.25%) ☐ 1000 (<0.1%)

Point Count w/Gravimetric
- ☐ 400 (<0.25%) ☐ 1000 (<0.1%)
- ☐ NYS 198.1 (friable in NY)
- ☐ NYS 198.6 NOB (non-friable-NY)
- ☐ NIOSH 9002 (<1%)

TEM – Air ☐ **4-4.5hr TAT (AHERA only)**
- ☐ AHERA 40 CFR, Part 763
- ☐ NIOSH 7402
- ☐ EPA Level II
- ☐ ISO 10312

TEM - Bulk
- ☐ TEM EPA NOB
- ☐ NYS NOB 198.4 (non-friable-NY)
- ☐ Chatfield SOP
- ☐ TEM Mass Analysis-EPA 600 sec. 2.5

TEM – Water: EPA 100.2
- Fibers >10µm ☐ Waste ☐ Drinking
- All Fiber Sizes ☐ Waste ☐ Drinking

TEM- Dust
- ☐ Microvac - ASTM D 5755
- ☐ Wipe - ASTM D6480
- ☐ Carpet Sonication (EPA 600/J-93/167)

Soil/Rock/Vermiculite
- ☐ PLM CARB 435 - A (0.25% sensitivity)
- ☐ PLM CARB 435 - B (0.1% sensitivity)
- ☐ TEM CARB 435 - B (0.1% sensitivity)
- ☐ TEM CARB 435 - C (0.01% sensitivity)
- ☐ EPA Protocol (Semi-Quantitative)
- ☐ EPA Protocol (Quantitative)

Other:
- ☐

☐ **Check For Positive Stop – Clearly Identify Homogenous Group**

Samplers Name: CHRIS GIUNTOLI **Samplers Signature:** [signature]

Sample #	Sample Description	Volume/Area (Air) HA # (Bulk)	Date/Time Sampled
99-1A	YELLOW PAINT		3/23/12
99-1B	↓		↓
99-2A	WHITE PAINT		↓
99-2B	↓		↓
99-3A	SHIM MATERIAL		↓
99-3B	↓		↓
99-4A	EXPANSION JOINT FILL MATERIAL		↓
99-4B	↓		↓

Client Sample # (s): **Total # of Samples:** 8

Relinquished (Client): [signature] **Date:** 3/24/12 **Time:** 1600

Received (Lab): [signature] **Date:** RECEIVED MAR 26 2012 **Time:** 0815 PX

Comments/Special Instructions:
SEPARATE LAB REPORT

PREPARED FOR:

CALIFORNIA DEPARTMENT OF TRANSPORTATION – DISTRICT 3
ENVIRONMENTAL ENGINEERING OFFICE
703 B STREET, P.0. BOX 911
MARYSVILLE, CALIFORNIA 95901

PREPARED BY:

GEOCON CONSULTANTS, INC.
3160 GOLD VALLEY DRIVE, SUITE 800
RANCHO CORDOVA, CALIFORNIA 95742

GEOCON PROJECT NO. S9300-06-134
TASK ORDER NO. 134, EA 03-3E0901

AUGUST 2010

GEOCON
CONSULTANTS, INC.
GEOTECHNICAL ■ ENVIRONMENTAL ■ MATERIALS

Project No. S9300-06-134
August 19, 2010

Mark Melani, Task Order Manager
Caltrans District 3
703 B Street/P.O. Box 911
Marysville, California 95901

Subject: INTERSTATE 80 POST MILE 0.3 TO 29.3 (BRIDGES)
PLACER COUNTY, CALIFORNIA
CONTRACT NO. 03A1368
TASK ORDER NO. 134, EA NO. 03-3E0901
ASBESTOS-CONTAINING MATERIALS AND LEAD-CONTAINING PAINT SURVEY REPORT

Dear Mr. Melani:

In accordance with California Department of Transportation Contract No. 03A1368 and Task Order No. 134, we have performed an asbestos-containing and lead-containing paint survey of ten bridges along Interstate 80 in Placer County, California. The scope of services included surveying the bridges for suspect asbestos-containing materials and lead-containing paint, collecting bulk samples, and submitting the samples to laboratories for analyses.

The accompanying report summarizes the services performed and laboratory analysis.

The contents of this report reflect the views of Geocon Consultants, Inc., who are responsible for the facts and accuracy of the data presented herein. The contents do not necessarily reflect the official views or policies of the State of California or the Federal Highway Administration. This report does not constitute a standard, specification, or regulation.

Please contact us if you have questions concerning the contents of this report or if we may be of further service.

Sincerely,

GEOCON CONSULTANTS, INC.

David A. Watts, CAC
Senior Project Scientist

John E. Juhrend, PE, CEG
Project Manager

(3 + 3 CDs) Addressee

TABLE OF CONTENTS

ASBESTOS-CONTAINING MATERIALS AND LEAD-CONTAINING PAINT SURVEY REPORT

Page

1.0 INTRODUCTION 1
- 1.1 Project Description 1
- 1.2 General Objectives 1

2.0 BACKGROUND 1
- 2.1 Asbestos 1
- 2.2 Lead Paint 2
- 2.3 Architectural Drawings and Previous Survey Activities 3

3.0 SCOPE OF SERVICES 3
- 3.1 Asbestos 4
- 3.2 Lead Paint 4

4.0 INVESTIGATIVE RESULTS 5
- 4.1 Asbestos Analytical Results 5
- 4.2 Paint Analytical Results 5

5.0 RECOMMENDATIONS 6
- 5.1 Asbestos 6
- 5.2 Lead Paint 6

6.0 REPORT LIMITATIONS 8

FIGURES
1. Vicinity Map
2A-C. Site Plans

PHOTOGRAPHS (1 through 42)

TABLES
1. Summary of Asbestos Analytical Results
2. Summary of Paint Analytical Results – Total and Soluble Lead

APPENDICES
A. Task Order 34 Bridge List
B. Analytical Laboratory Reports and Chain-of-custody Documentation

ASBESTOS-CONTAINING MATERIALS AND LEAD-CONTAINING PAINT SURVEY REPORT

1.0 INTRODUCTION

This Asbestos-containing Materials and Lead-containing Paint (LCP) Survey Report was prepared by Geocon Consultants, Inc. under Caltrans Contract No. 03A1368, Task Order No. 134 (TO-134).

1.1 Project Description

The project consists of ten bridges on Interstate 80 in Placer County, California. We performed asbestos and LCP survey activities at the bridges. The approximate project locations are depicted on the Vicinity Map, Figure 1. The approximate sample locations are depicted on the Site Plans, Figures 2A through 2C. A list of the bridges included in our survey is presented as Appendix A.

1.2 General Objectives

The purpose of the scope of services outlined in TO-134 was to determine the presence and quantity of asbestos and LCP at the project locations prior to bridge improvement activities. The information obtained from this investigation will be used by Caltrans for waste profiling, determining California Occupational Safety and Health Administration (Cal/OSHA) applicability, and coordinating asbestos and LCP disturbance activities.

> *It was <u>not</u> Geocon's intent during this inspection to conduct an evaluation of lead-based paint hazards in accordance with U.S. Department of Housing and Urban Development (HUD) guidelines.*

2.0 BACKGROUND

2.1 Asbestos

The *Code of Federal Regulations (CFR),* 40 CFR 61, Subpart M, National Emissions Standards for Hazardous Air Pollutants (NESHAP) and Federal Occupational Safety and Health Administration (FED OSHA) classify asbestos-containing material (ACM) as any material or product that contains *greater than* 1% asbestos. Nonfriable ACM is classified by NESHAP as either Category I or Category II material defined as follows:

- **Category I** – asbestos-containing packings, gaskets, resilient floor coverings, and asphalt roofing products.
- **Category II** – all remaining types of nonfriable asbestos-containing material not included in Category I that when dry, cannot be crumbled, pulverized, or reduced to powder by hand pressure.

Regulated asbestos-containing material (RACM), a hazardous waste when friable, is classified as any manufactured material that contains *greater than* 1% asbestos by dry weight *and* is:

- Friable (can be crumbled, pulverized, or reduced to powder by hand pressure); or
- Category I material that has become friable; or
- Category I material that has been subjected to sanding, grinding, cutting, or abrading; or
- Category II nonfriable material that has a high probability of becoming crumbled, pulverized, or reduced to a powder during demolition or renovation activities.

Activities that disturb materials containing *any* amount of asbestos are subject to certain requirements of the Cal/OSHA asbestos standard contained in Title 8, CCR Section 1529. Typically, removal or disturbance of more than 100 square feet of material containing more than 0.1% asbestos must be performed by a registered asbestos abatement contractor, but associated waste labeling is not required if the material contains 1% or less asbestos. When the asbestos content of a material exceeds 1%, virtually all requirements of the standard become effective.

Materials containing more than 1% asbestos are also subject to NESHAP regulations (40 CFR Part 61, Subpart M). RACM (friable ACM and nonfriable ACM that will become friable during demolition operations) must be removed from structures prior to demolition. Certain nonfriable ACM and materials containing 1% or less asbestos may remain in structures during demolition; however, there are waste handling/disposal issues and Cal/OSHA work requirements that must be addressed. Contractors are responsible for segregating and characterizing waste streams prior to disposal.

With respect to potential worker exposure, notification, and registration requirements, Cal/OSHA defines asbestos-containing construction material (ACCM) as construction material that contains more than 0.1% asbestos (Title 8, CCR 341.6).

2.2 Lead Paint

Construction activities (including demolition) that disturb materials or paints containing *any* amount of lead are subject to certain requirements of the Cal/OSHA lead standard contained in Title 8, CCR, Section 1532.1. Deteriorated paint is defined by Title 17, CCR, Division 1, Chapter 8, §35022 as a surface coating that is cracking, chalking, flaking, chipping, peeling, non-intact, failed, or otherwise separating from a substrate. Demolition of a deteriorated LCP component would require waste characterization and appropriate disposal. Intact LCP on a component is currently accepted by most landfill facilities; however, contractors are responsible for segregating and characterizing waste streams prior to disposal.

For a solid waste containing lead, the waste is classified as California hazardous when: 1) the total lead content equals or exceeds the respective Total Threshold Limit Concentration (TTLC) of

1,000 milligrams per kilogram (mg/kg); or 2) the soluble lead content equals or exceeds the respective Soluble Threshold Limit Concentration (STLC) of 5 milligrams per liter (mg/l) based on the standard Waste Extraction Test (WET). A waste has the potential for exceeding the lead STLC when the waste's total lead content is greater than or equal to ten times the respective STLC value since the WET uses a 1:10 dilution ratio. Hence, when total lead is detected at a concentration greater than or equal to 50 mg/kg, and assuming that 100 percent of the total lead is soluble, soluble lead analysis is required. Lead-containing waste is classified as "Resource, Conservation, and Recovery Act" (RCRA) hazardous, or Federal hazardous, when the soluble lead content equals or exceeds the Federal regulatory level of 5 mg/l based on the Toxicity Characteristic Leaching Procedure (TCLP).

The above regulatory criteria are based on chemical concentrations. Wastes may also be classified as hazardous based on other criteria such as ignitability; however, for the purposes of this investigation, toxicity (i.e., lead concentration) is the primary factor considered for waste classification since waste generated during the construction activities would not likely warrant testing for ignitability or other criteria. Waste that is classified as either California-hazardous or RCRA-hazardous requires management as a hazardous waste.

Potential hazards exist to workers who remove or cut through LCP coatings during demolition. Dust containing hazardous concentrations of lead may be generated during scraping or cutting materials coated with lead-containing paint. Torching of these materials may produce lead oxide fumes. Therefore, air monitoring and/or respiratory protection may be required during the demolition of materials coated with LCP. Guidelines regarding regulatory provisions for construction work where workers may be exposed to lead are presented in Title 8, CCR, Section 1532.1.

2.3 Architectural Drawings and Previous Survey Activities

We reviewed bridge architectural plans provided by Caltrans prior to field activities. We observed no evidence of asbestos or lead paint use on the architectural plans provided. Previous bridge asbestos survey reports were not available for our review.

3.0 SCOPE OF SERVICES

Mr. David Watts, a California-Certified Asbestos Consultant (CAC), certification No. 98-2404 (expiration September 16, 2011), and Certified Lead Paint Inspector/Assessor and Project Monitor with the California Department of Public Health Services (DPH), certification numbers I-1734 and M-1734 (expiration December 4, 2010), performed the asbestos and LCP survey at the project locations on June 29 and 30, 2010.

3.1 Asbestos

Suspect ACM were grouped into homogeneous areas with representative samples randomly collected from each. In addition, each potential ACM was evaluated for friability. A total of 32 bulk asbestos samples representing four suspect construction materials were collected.

Our procedures for inspection and sampling in accordance with TO-134 are discussed below:

- Collected bulk asbestos samples after first wetting material with a light mist of water. The samples were then cut from the substrate and transferred to a labeled container. Note that when multiple samples were collected, the sampling locations were distributed throughout the homogeneous area (spaces where the material was observed).
- Relinquished bulk asbestos samples to EMSL Analytical, Inc., a California-licensed and Caltrans-approved subcontractor, for asbestos analysis in accordance with United States Environmental Protection Agency (EPA) Test Method 600/R-93/116 using polarized light microscopy (PLM) under chain-of-custody protocol. EMSL Analytical, Inc. is a laboratory accredited by the National Institute of Standards and Technology National Voluntary Laboratory Accreditation Program (NIST-NVLAP) for bulk asbestos fiber analysis. The laboratory analyses were requested on a 5-day turn-around-time.

Bridge and sample group identification numbers, material descriptions, approximate quantities, friability assessments, and photo references are summarized on Table 1. Approximate sample locations are presented on Figures 2A through 2C. Materials represented by the samples collected are shown in the attached photographs.

3.2 Lead Paint

Nine bulk paint samples were collected from suspect LCP observed at the project locations. We were not able to collect samples of traffic striping observed at bridges 19-0038, 19-0024, 19-0023, 19-0042, or 19-0094 due to safety concerns (i.e., traffic). Our sampling procedures in accordance with TO-134 are discussed below:

- Collected bulk samples of suspect LCP using techniques presented in HUD guidelines. In addition, the painted areas were evaluated for evidence of deterioration such as flaking or cracking.
- Relinquished bulk LCP samples under chain-of-custody protocol to Advanced Technology Laboratories, a California-licensed and Caltrans-approved subcontractor, for lead analysis in accordance with EPA Test Method 6010B. Advanced Technology Laboratories is accredited by the DPH for lead analysis. The laboratory analysis was requested on a 5-day turn-around-time.

Paint sample identification numbers, descriptions, peeling and flaking quantities, and photo references are summarized on Table 2. Approximate sample locations are presented on Figure 2. Materials represented by the samples collected are shown in the attached photographs.

4.0 INVESTIGATIVE RESULTS

4.1 Asbestos Analytical Results

Chrysotile asbestos at a concentration of 80% was detected in a sample representing approximately 50 square feet of nonfriable sheet packing used as shims on the barrier rail systems of Bridge 19-0024.

Chrysotile asbestos at a concentration of 80% was detected in a sample representing approximately 75 square feet of nonfriable sheet packing used as shims on the barrier rail systems of Bridge 19-0023.

Chrysotile asbestos at a concentration of 80% was detected in a sample representing approximately 40 square feet of nonfriable sheet packing used as shims on the barrier rail systems of Bridge 19-0042.

Chrysotile asbestos at a concentration of 80% was detected in a sample representing approximately 25 square feet of nonfriable sheet packing used as shims on the barrier rail systems of Bridge 19-0134.

Chrysotile asbestos at a concentration of 80% was detected in a sample representing approximately 70 square feet of nonfriable sheet packing used as shims on the barrier rail systems of Bridge 19-0077.

No asbestos was detected in samples of the suspect materials collected during our survey. A summary of the analytical laboratory test results for asbestos is presented on Table 1. Reproductions of the laboratory reports and chain-of-custody documentation are presented in Appendix B.

4.2 Paint Analytical Results

A sample representing intact white traffic striping observed on Bridge 19-0083 exhibited a total lead concentration of 9.1 mg/kg. A sample representing intact yellow traffic striping observed on the bridge exhibited a total lead concentration of 7,700 mg/kg and a TCLP lead concentration of 1.0 mg/l.

A sample representing intact green paint applied to structural steel on Bridge 19-0038 exhibited a total lead concentration of 190,000 mg/kg and a TCLP lead concentration of 67 mg/l.

A sample representing intact white traffic striping observed on Bridge 19-0099 exhibited a total lead concentration of 12 mg/kg. A sample representing intact yellow traffic striping observed on the bridge exhibited a total lead concentration of 50,000 mg/kg and a TCLP lead concentration of 3.2 mg/l. A sample representing approximately 80 square feet of deteriorated white guardrail paint observed on the bridge exhibited a total lead concentration of 7,500 mg/kg and a TCLP lead concentration of 58 mg/l.

A sample representing intact white traffic striping observed on Bridge 19-0150 exhibited a total lead concentration of 4.7 mg/kg.

A sample representing approximately 200 square feet of deteriorated graffiti/graffiti abatement observed on the north abutment of Bridge 19-0077 exhibited a total lead concentration of 150 mg/kg, a WET lead concentration of 8.6 mg/l, and a TCLP lead concentration of 0.27 mg/l. A sample representing intact white traffic striping observed on the bridge exhibited a total lead concentration of 4.9 mg/kg.

A summary of the analytical laboratory test results for paint is presented on Table 2. Reproductions of the laboratory reports and chain-of-custody documentation are presented in Appendix B.

5.0 RECOMMENDATIONS

Based on our findings, we recommend the following:

5.1 Asbestos

NESHAP regulations do not require that asbestos-containing sheet packing (a Category I nonfriable/nonhazardous material) identified during our survey be removed prior to demolition or be treated as hazardous waste. However, the disturbance of the material is still covered by the Cal/OSHA asbestos standard (Title 8, CCR Section 1529). We recommend that a licensed contractor registered with Cal/OSHA for asbestos-related work perform any activities that would disturb the material. Contractors are responsible for informing the landfill of the contractor's intent to dispose of asbestos waste. Some landfills may require additional waste characterization. Contractors are responsible for segregating and characterizing waste streams prior to disposal.

Geocon also recommends the notification of contractors (that will be conducting renovation or related activities) of the presence of asbestos in their work areas (i.e., provide contractor[s] with a copy of this report and a list of asbestos removed during subsequent activities). Contractors not trained for asbestos work should be instructed not to disturb asbestos during their activities.

Written notification to U.S. EPA Region IX and the California Air Resources Board is required ten working days prior to commencement of *any* demolition activity (whether asbestos is present or not). In accordance with Title 8, CCR 341.9, written notification to the nearest Cal/OSHA district office is required at least 24 hours prior to certain asbestos-related work.

5.2 Lead Paint

Deteriorated white guardrail paint observed on Bridge 19-0099 would be classified as California and Federal hazardous based on lead content. Deteriorated graffiti/graffiti abatement observed on the north abutment of Bridge 19-0077 would be classified as California hazardous based on lead content. As

such, these paints must be removed and disposed of prior to renovation, demolition, or other activities that would disturb them. For budgetary planning purposes, our opinion of probable costs for the removal, containerization, transportation, and disposal of these paints is $5,000.

Contractors removing deteriorated LCP should be required to use personnel who have lead-related construction certification as supervisors or workers, as appropriate, from the California DPH for LCP removal work. Loose and peeling/flaking LCP require removal prior to demolition for waste segregation purposes: to separate potentially hazardous waste (Category III concentrated lead such as loose paint, paint sludge, vacuum debris, and vacuum filters) from non-hazardous demolition debris (Category II intact lead-painted architectural components such as doors, windows, framework, cladding, and trim). Category I waste is low lead waste (typically non-hazardous) such as construction materials, filtered wash water, and plastic sheeting. Contractors are responsible for informing the landfill of the contractor's intent to dispose of RCRA waste, California hazardous waste, and/or architectural components containing intact LCP. Some landfills may require additional waste characterization. Contractors are responsible for segregating and characterizing waste streams prior to disposal.

Green paint applied to structural steel on Bridge 19-0038 would be classified as California and Federal hazardous based on lead content if stripped, blasted, or otherwise separated from the substrate.

Yellow traffic striping sampled during our survey would be classified as California hazardous based on lead content if stripped, blasted, or otherwise separated from the substrate. (We recommend that yellow traffic striping used throughout the project corridor be considered California hazardous.) White traffic striping sampled during our survey would not be classified as California or Federal hazardous based on lead content.

We recommend that all paints at the project location (graffiti, graffiti abatement, signage, traffic striping, etc.) be treated as lead-containing for purposes of determining the applicability of the Cal/OSHA lead standard during any future maintenance, renovation, and demolition activities. This recommendation is based on LCP sample results and the fact that lead was a common ingredient of paints manufactured before 1978 and is still an ingredient of some paints. In accordance with Title 8, CCR, Section 1532.1(p), written notification to the nearest Cal/OSHA district office is required at least 24 hours prior to certain lead-related work. Compliance and training requirements regarding construction activities where workers may be exposed to lead are presented in Title 8, CCR, Section 1532.1, subsections (e) and (l), respectively. Contractors are responsible for segregating and characterizing waste streams prior to disposal.

6.0 REPORT LIMITATIONS

The asbestos and LCP surveys were conducted in conformance with generally accepted standards of practice for identifying and evaluating asbestos and LCP in structures. The surveys addressed only those structures identified in Section 1.1. Due to the nature of structure surveys, asbestos and LCP use, and laboratory analytical limitations, some ACM or LCP at the project location may not have been identified. Spaces such as cavities, voids, crawlspaces, and pipe chases may have been concealed to our investigator. Previous renovation work may have concealed or covered spaces or materials or may have partially demolished materials and left debris in inaccessible areas. Additionally, renovation activities may have partially replaced ACM with indistinguishable non-ACM. Asbestos and/or LCP may exist in areas of the structures that were not accessible or sampled in conjunction with this TO.

During renovation or demolition operations, suspect materials may be uncovered which are different from those accessible for sampling during this assessment. Personnel in charge of renovation/demolition should be alerted to note materials uncovered during such activities that differ substantially from those included in this or previous assessment reports. If suspect ACM and/or LCP are found, additional sampling and analysis should be performed to determine if the materials contain asbestos or lead.

This report has been prepared exclusively for Caltrans. The information contained herein is only valid as of the date of the report and will require an update to reflect additional information obtained.

This report is not a comprehensive site characterization and should not be construed as such. The findings as presented in this report are predicated on the results of the limited sampling and laboratory testing performed. In addition, the information obtained is not intended to address potential impacts related to sources other than those specified herein. Therefore, the report should be deemed conclusive with respect to only the information obtained. We make no warranty, express or implied, with respect to the content of this report or any subsequent reports, correspondence or consultation. Geocon strived to perform the services summarized herein in accordance with the local standard of care in the geographic region at the time the services were rendered.

The contents of this report reflect the views of the author who is responsible for the facts and accuracy of the data presented herein. The contents do not necessarily reflect the official views or policies of the State of California or the Federal Highway Administration. This report does not constitute a standard, specification, or regulation.

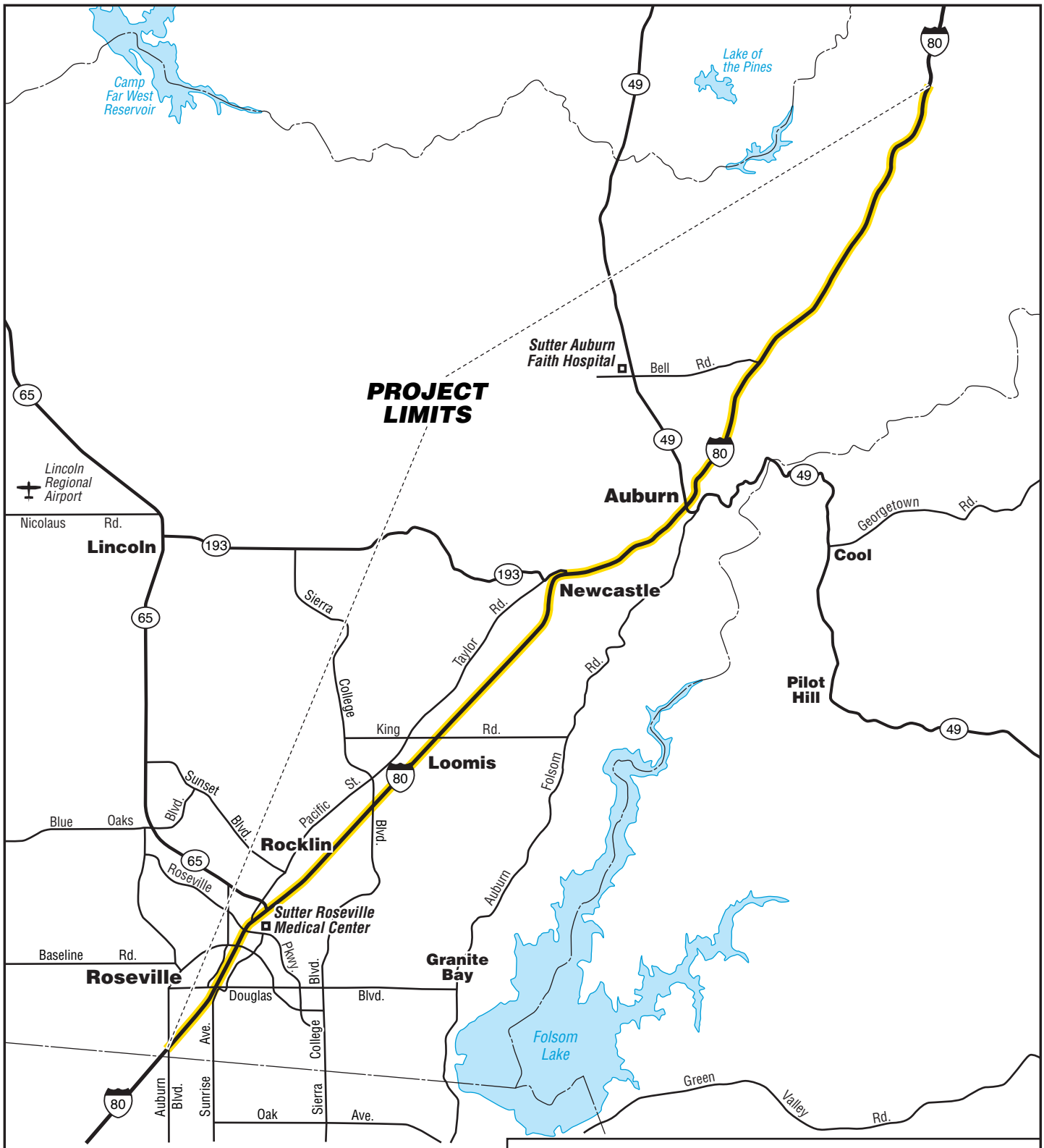

GEOCON CONSULTANTS, INC.
3160 GOLD VALLEY DR. – SUITE 800 - RANCHO CORDOVA, CA. 95742
PHONE 916 852-9118 – FAX 916 852-9132

Interstate 80 Post Mile 0.3 to 29.3

Placer County, California

GEOCON Proj. No. S9300-06-134

Task Order No. 134, EA 03-3E0901

VICINITY MAP

August 2010

Figure 1

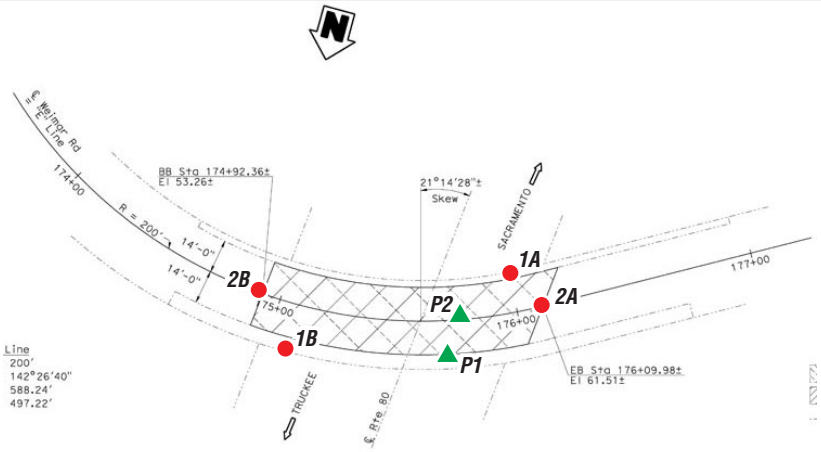

WEIMAR CROSS ROAD OC
BR NO 19-0083 RTE 80 PM 29.32

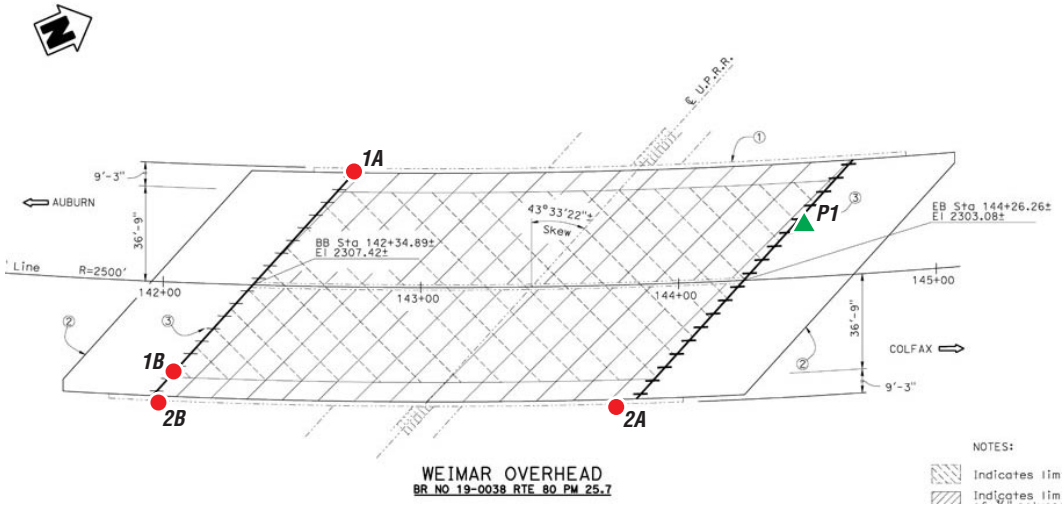

WEIMAR OVERHEAD
BR NO 19-0038 RTE 80 PM 25.7

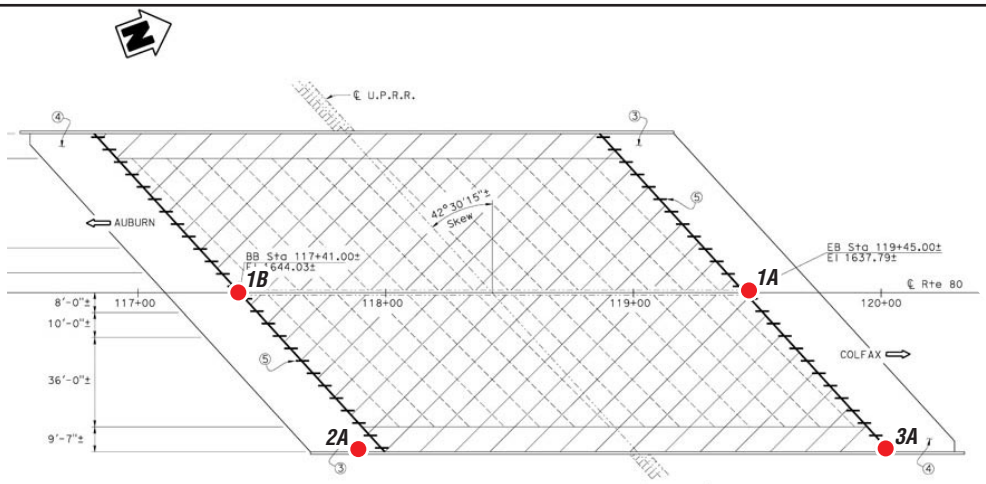

BOWMAN OVERHEAD (NORTH)
BR NO 19-0024 RTE 80 PM 20.69

LEGEND:

- ● Approximate Asbestos Sample Location
- ▲ Approximate Paint Sample Location

GEOCON
CONSULTANTS, INC.
3160 GOLD VALLEY DR. – SUITE 800 - RANCHO CORDOVA, CA. 95742
PHONE 916 852-9118 – FAX 916 852-9132

Interstate 80 Post Mile 0.3 to 29.3

Placer County, California	**SITE PLAN**	
GEOCON Proj. No. S9300-06-134		
Task Order No. 134, EA 03-3E0901	August 2010	Figure 2A

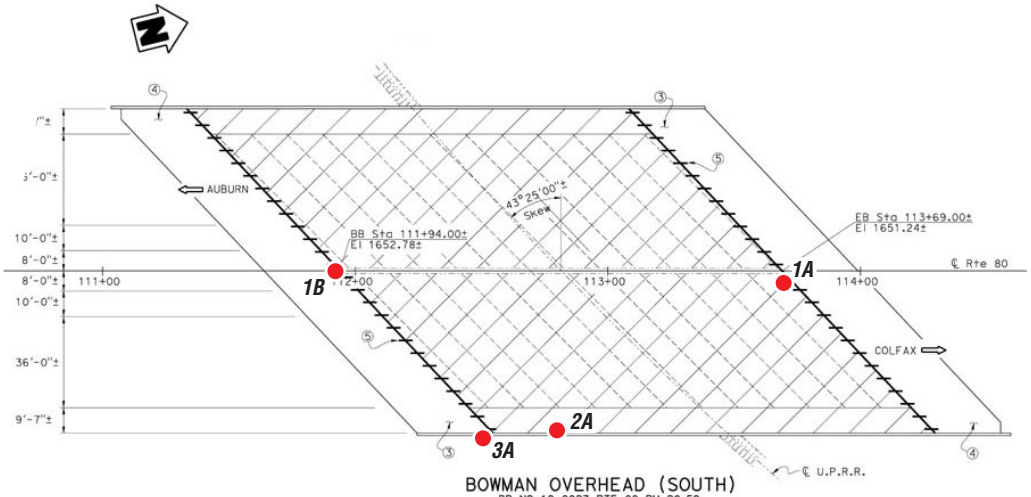

BOWMAN OVERHEAD (SOUTH)
BR NO 19-0023 RTE 80 PM 20.59

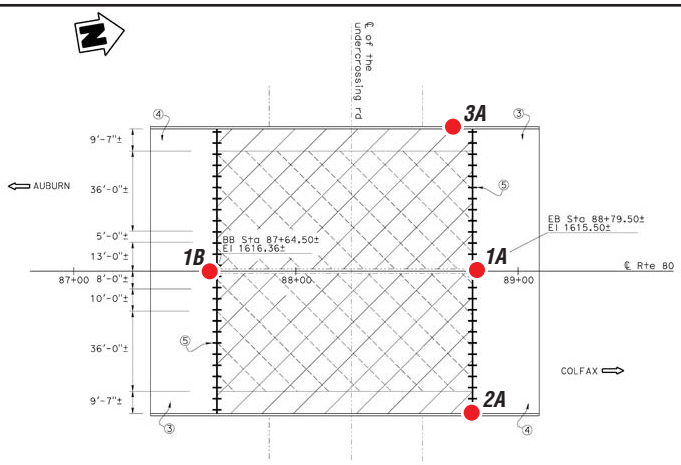

BOWMAN UC
BR NO 19-0042 RTE 80 PM 20.13

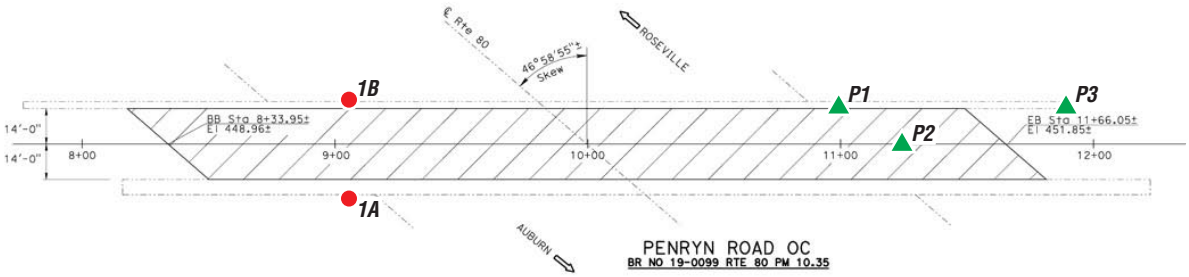

PENRYN ROAD OC
BR NO 19-0099 RTE 80 PM 10.35

LEGEND:

- ● Approximate Asbestos Sample Location
- ▲ Approximate Paint Sample Location

GEOCON CONSULTANTS, INC.
3160 GOLD VALLEY DR. – SUITE 800 - RANCHO CORDOVA, CA. 95742
PHONE 916 852-9118 – FAX 916 852-9132

Interstate 80 Post Mile 0.3 to 29.3

Placer County, California

GEOCON Proj. No. S9300-06-134

SITE PLAN

Task Order No. 134, EA 03-3E0901 | August 2010 | Figure 2B

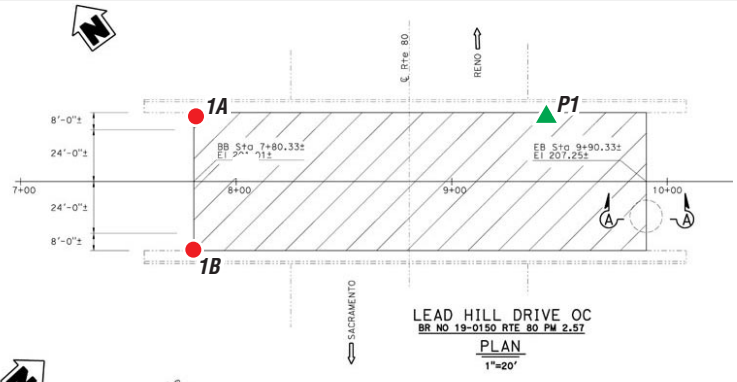

LEAD HILL DRIVE OC
BR NO 19-0150 RTE 80 PM 2.57
PLAN
1"=20'

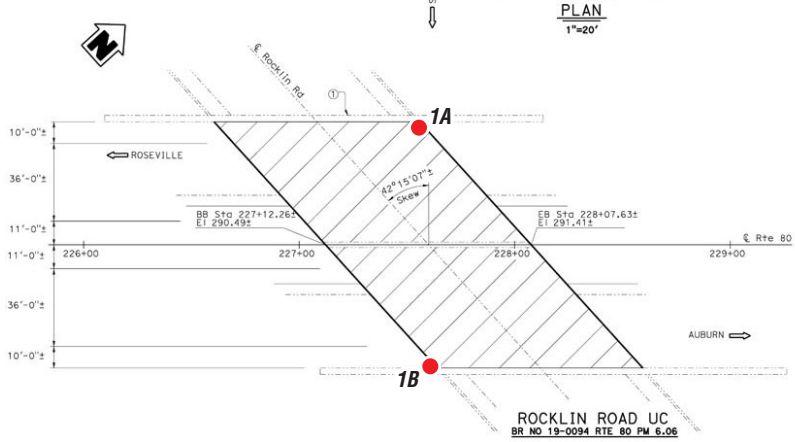

ROCKLIN ROAD UC
BR NO 19-0094 RTE 80 PM 6.06

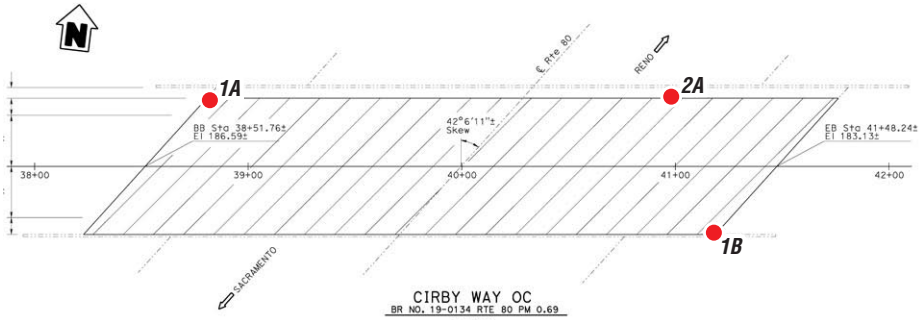

CIRBY WAY OC
BR NO. 19-0134 RTE 80 PM 0.69
PLAN
1"=20'

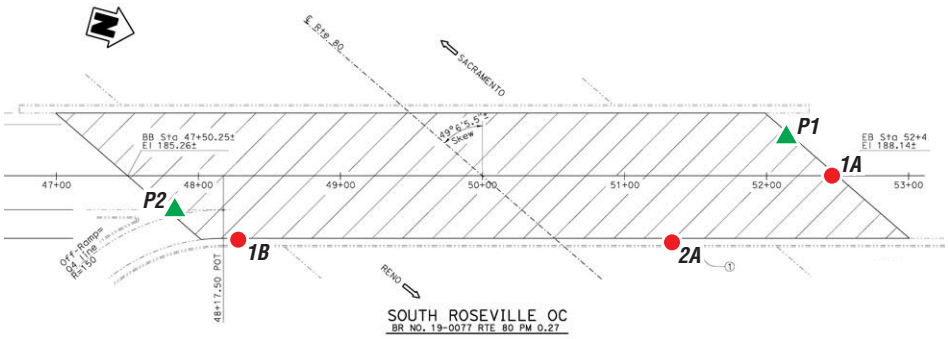

SOUTH ROSEVILLE OC
BR NO. 19-0077 RTE 80 PM 0.27

LEGEND:

- ● Approximate Asbestos Sample Location
- ▲ Approximate Paint Sample Location

GEOCON
CONSULTANTS, INC.
3160 GOLD VALLEY DR. – SUITE 800 - RANCHO CORDOVA, CA. 95742
PHONE 916 852-9118 – FAX 916 852-9132

Interstate 80 Post Mile 0.3 to 29.3

Placer County, California

SITE PLAN

GEOCON Proj. No. S9300-06-134

Task Order No. 134, EA 03-3E0901 | August 2010 | Figure 2C

Photo 1 – Bridge 19-0083

Photo 2 – Bridge 19-0083 expansion joint fill material

Photo 3 – Bridge 19-0083 deck

GEOCON
CONSULTANTS, INC.
3160 GOLD VALLEY DR – SUITE 800 – RANCHO CORDOVA, CA 95742
PHONE 916.852.9118 – FAX 916.852.9132

PHOTOGRAPHS 1, 2, & 3		
Interstate 80 Post Mile 0.3 to 29.3 (Bridges) Placer County, California		
S9300-06-134	Task Order No. 134	August 2010

Photo 4 – Bridge 19-0038

Photo 5 – Bridge 19-0038 expansion joint fill material

Photo 6 – Bridge 19-0038 deck

Photo 7 – Bridge 19-0038 piping

Photo 8 – Bridge 19-0024

Photo 9 – Bridge 19-0024 expansion joint fill material

GEOCON
CONSULTANTS, INC.
3160 GOLD VALLEY DR – SUITE 800 – RANCHO CORDOVA, CA 95742
PHONE 916.852.9118 – FAX 916.852.9132

PHOTOGRAPHS 7, 8, & 9		
Interstate 80 Post Mile 0.3 to 29.3 (Bridges) Placer County, California		
S9300-06-134	Task Order No. 134	August 2010

Photo 10 – Bridge 19-0024 piping

Photo 11 – Bridge 19-0024 shims

Photo 12 – Bridge 19-0024 deck

GEOCON
CONSULTANTS, INC.
3160 GOLD VALLEY DR – SUITE 800 – RANCHO CORDOVA, CA 95742
PHONE 916.852.9118 – FAX 916.852.9132

PHOTOGRAPHS 10, 11, & 12		
Interstate 80 Post Mile 0.3 to 29.3 (Bridges) Placer County, California		
S9300-06-134	Task Order No. 134	August 2010

Photo 13 – Bridge 19-0023

Photo 14 – Bridge 19-0023

Photo 15 – Bridge 19-0023 expansion joint fill material

Photo 16 – Bridge 19-0023 piping

Photo 17 – Bridge 19-0023 shims

Photo 18 – Bridge 19-0023 deck

Photo 19 – Bridge 19-0042

Photo 20 – Bridge 19-0042 expansion joint fill material

Photo 21 – Bridge 19-0042 deck

Photo 22 – Bridge 19-0042 piping

Photo 23 – Bridge 19-0042 shims

Photo 24 – Bridge 19-0099

Photo 25 – Bridge 19-0099 expansion joint fill material

Photo 26 – Bridge 19-0099 deck

Photo 27 – Bridge 19-0099 guardrails

Photo 28 – Bridge 19-0094

Photo 29 – Bridge 19-0094 expansion joint fill material

Photo 30 – Bridge 19-0094 deck

Photo 31 – Bridge 19-0150

Photo 32 – Bridge 19-0150 expansion joint fill material

Photo 33 – Bridge 19-0150 deck

Photo 34 – Bridge 19-0134

Photo 35 – Bridge 19-0134 expansion joint fill material

Photo 36 – Bridge 19-0134 shims

Photo 37– Bridge 19-0134 deck

Photo 38 – Bridge 19-0077

Photo 39 – Bridge 19-0077 expansion joint fill material

Photo 40 – Bridge 19-0077 shims

Photo 41– Bridge 19-0077 graffiti abatement (north abutment)

Photo 42 – Bridge 19-0077 deck

TABLE 1
SUMMARY OF ASBESTOS ANALYTICAL RESULTS
INTERSTATE 80 POST MILE 0.3 TO 29.3 (BRIDGES)
CALTRANS CONTRACT 03A1638, TASK ORDER NO. 134, EA 03-3E0901
PLACER COUNTY, CALIFORNIA

Polarized Light Microscopy (PLM) - EPA Test Method 600/R-93/116

Bridge No.	Sample Group No.	Description of Material	Approximate Quantity	Friable	Site Photo	Asbestos Content
19-0083	0083-1	Expansion joint fill material (abutments)	NA	NA	2	ND
	0083-2	Expansion joint fill material (span)	NA	NA	2	ND
19-0038	0038-1	Expansion joint fill material	NA	NA	5	ND
	0038-2	Pipe wrap	NA	NA	7	ND
19-0024	0024-1	Expansion joint fill material	NA	NA	9	ND
	0024-2	Pipe wrap	NA	NA	10	ND
	0024-3	**Shims**	**50 square feet**	**No**	**11**	**80%**
19-0023	0023-1	Expansion joint fill material	NA	NA	15	ND
	0023-2	Pipe wrap	NA	NA	16	ND
	0023-3	**Shims**	**75 square feet**	**No**	**17**	**80%**
19-0042	0042-1	Expansion joint fill material	NA	NA	20	ND
	0042-2	Pipe wrap	NA	NA	22	ND
	0042-3	**Shims**	**40 square feet**	**No**	**23**	**80%**
19-0099	0099-1	Expansion joint fill material	NA	NA	25	ND
19-0094	0094-1	Expansion joint fill material	NA	NA	29	ND
19-0150	0150-1	Expansion joint fill material	NA	NA	32	ND

TABLE 1
SUMMARY OF ASBESTOS ANALYTICAL RESULTS
INTERSTATE 80 POST MILE 0.3 TO 29.3 (BRIDGES)
CALTRANS CONTRACT 03A1638, TASK ORDER NO. 134, EA 03-3E0901
PLACER COUNTY, CALIFORNIA

Polarized Light Microscopy (PLM) - EPA Test Method 600/R-93/116

Bridge No.	Sample Group No.	Description of Material	Approximate Quantity	Friable	Site Photo	Asbestos Content
19-0134	0134-1	Expansion joint fill material	NA	NA	35	ND
	0134-2	**Shims**	**25 square feet**	**No**	**36**	**80%**
19-0077	0077-1	Expansion joint fill material	NA	NA	39	ND
	0077-2	**Shims**	**70 square feet**	**No**	**40**	**80%**

Notes:

NA = Not applicable (no asbestos detected)

ND = Not detected

TABLE 2
SUMMARY OF PAINT ANALYTICAL RESULTS - TOTAL AND SOLUBLE LEAD
INTERSTATE 80 POST MILE 0.3 TO 29.3 (BRIDGES)
CALTRANS CONTRACT 03A1638, TASK ORDER NO. 134, EA 03-3E0901
PLACER COUNTY, CALIFORNIA

Bridge No.	Paint Sample No.	Paint Description	Approximate Quantity Peeling/Flaking	Site Photos	Total Lead (mg/kg)	WET Lead (mg/l)	TCLP Lead (mg/l)
19-0083	0083-P1	White traffic striping	Intact	3	9.1	---	---
	0083-P2	Yellow traffic striping	Intact	3	7,700	---	1.0
19-0038	0038-P1	Green (structural steel)	Intact	4 and 7	190,000	---	67
19-0099	0099-P1	White traffic striping	Intact	26	12	---	---
	0099-P2	Yellow traffic striping	Intact	26	50,000	---	3.2
	0099-P3	White (guardrails)	80 square feet	27	7,500	---	58
19-0150	0150-P1	White traffic striping	Intact	33	4.7	---	---
19-0077	0077-P1	Gray (graffiti abatement)	200 square feet	41	150	8.6	0.27
	0077-P2	White traffic striping	Intact	42	4.9	---	---

Notes:

mg/kg = milligrams per kilogram (EPA Test Method 6010B)
WET = Waste Extraction Test (EPA Test Method 7420)
mg/l = milligrams per liter
TCLP = Toxicity Characteristic Leaching Procedure (EPA Test Method 1311)
--- = Not analyzed

APPENDIX A

Task Order 34 Bridge List

Bridge Name	Bridge Number	Post Mile
1. South Roseville OC	19-0077	0.27
2. Cirby Way OC	19-0134	0.69
3. Lead Hill Drive OC	19-0150	2.57
4. Rocklin Road UC	19-0094	6.06
5. Penryn Road OC	19-0099	10.35
6. Bowman UC	19-0042	20.13
7. Bowman OH (south)	19-0023	20.59
8. Bowman OH (north)	19-0024	20.69
9. Weimar OH	19-0038	28.7
10. Weimar Cross Road OC	19-0083	29.32

APPENDIX B

EMSL Analytical, Inc
2235 Polvorosa Ave , Suite 230, San Leandro, CA 94577
Phone: (510) 895-3675 Fax: (510) 895-3680 Email: milpitaslab@emsl.com

Attn: **David Watts**
Geocon Consultants
6671 Brisa Street
Livermore, CA 94550

Fax: (925) 371-5915 Phone: (925) 371-5900
Project: **S9300-06-134**

Customer ID: GECN21
Customer PO: S9300-06-134
Received: 07/01/10 10:30 AM
EMSL Order: 091005815

EMSL Proj: S9300-06-**
Analysis Date: 7/9/2010

Test Report: Asbestos Analysis of Bulk Materials via EPA 600/R-93/116 Method using Polarized Light Microscopy

			Non-Asbestos				Asbestos
Sample	**Description**	**Appearance**	**%**	**Fibrous**	**%**	**Non-Fibrous**	**% Type**
0083-1A-EJM *091005815-0001*		Black Fibrous Homogeneous	40%	Cellulose	60%	Non-fibrous (other)	**None Detected**
0083-1B-EJM *091005815-0002*		Black Fibrous Homogeneous	40%	Cellulose	60%	Non-fibrous (other)	**None Detected**
0083-2A-EJM *091005815-0003*		Black Non-Fibrous Homogeneous			100%	Non-fibrous (other)	**None Detected**
0083-2B-EJM *091005815-0004*		Black Non-Fibrous Homogeneous			100%	Non-fibrous (other)	**None Detected**
0038-1A-EJM *091005815-0005*		Brown Fibrous Homogeneous	40%	Cellulose	60%	Non-fibrous (other)	**None Detected**
0038-1B-EJM *091005815-0006*		Brown Fibrous Homogeneous	40%	Cellulose	60%	Non-fibrous (other)	**None Detected**
0038-2A-Pipe Wrap *091005815-0007*		Black Non-Fibrous Homogeneous			100%	Non-fibrous (other)	**None Detected**

Initial report from 07/09/2010 14:45:19

Analyst(s)

Jorge Leon (32)

Baojia Ke, Laboratory Manager
or other approved signatory

Due to magnification limitations inherent in PLM, asbestos fibers in dimensions below the resolution capability of PLM may not be detected. Samples reported as <1% or none detected may require additional testing by TEM to confirm asbestos quantities. The above test report relates only to the items tested and may not be reproduced in any form without the express written approval of EMSL Analytical, Inc. EMSL's liability is limited to the cost of analysis. EMSL bears no responsibility for sample collection activities or analytical method limitations. Interpretation and use of test results are the responsibility of the client.Samples received in good condition unless otherwise noted.
Samples analyzed by EMSL Analytical, Inc 2235 Polvorosa Ave , Suite 230, San Leandro CA NVLAP Lab Code 101048-3, MA AA000201, WA C2007

EMSL Analytical, Inc
2235 Polvorosa Ave , Suite 230, San Leandro, CA 94577
Phone: (510) 895-3675 Fax: (510) 895-3680 Email: milpitaslab@emsl.com

Attn: **David Watts**
Geocon Consultants
6671 Brisa Street
Livermore, CA 94550

Fax: (925) 371-5915 Phone: (925) 371-5900
Project: **S9300-06-134**

Customer ID: GECN21
Customer PO: S9300-06-134
Received: 07/01/10 10:30 AM
EMSL Order: 091005815

EMSL Proj: S9300-06-**
Analysis Date: 7/9/2010

Test Report: Asbestos Analysis of Bulk Materials via EPA 600/R-93/116 Method using Polarized Light Microscopy

Sample	Description	Appearance	Non-Asbestos %	Fibrous	Non-Asbestos %	Non-Fibrous	Asbestos %	Type
0038-2B-Pipe Wrap *091005815-0008*		Black Non-Fibrous Homogeneous			100%	Non-fibrous (other)		**None Detected**
0024-1A-EJM *091005815-0009*		Brown Fibrous Homogeneous	40%	Cellulose	60%	Non-fibrous (other)		**None Detected**
0024-1B-EJM *091005815-0010*		Brown Fibrous Homogeneous	40%	Cellulose	60%	Non-fibrous (other)		**None Detected**
0024-2A-Pipe Wrap *091005815-0011*		Black Non-Fibrous Homogeneous			100%	Non-fibrous (other)		**None Detected**
0024-3A-Shims *091005815-0012*		Black Fibrous Homogeneous			20%	Non-fibrous (other)	**80%**	**Chrysotile**
0023-1A-EJM *091005815-0013*		Brown Fibrous Homogeneous	40%	Cellulose	60%	Non-fibrous (other)		**None Detected**
0023-1B-EJM *091005815-0014*		Brown Fibrous Homogeneous	40%	Cellulose	60%	Non-fibrous (other)		**None Detected**

Initial report from 07/09/2010 14:45:19

Analyst(s)

Jorge Leon (32)

Baojia Ke, Laboratory Manager
or other approved signatory

Due to magnification limitations inherent in PLM, asbestos fibers in dimensions below the resolution capability of PLM may not be detected. Samples reported as <1% or none detected may require additional testing by TEM to confirm asbestos quantities. The above test report relates only to the items tested and may not be reproduced in any form without the express written approval of EMSL Analytical, Inc. EMSL's liability is limited to the cost of analysis. EMSL bears no responsibility for sample collection activities or analytical method limitations. Interpretation and use of test results are the responsibility of the client.Samples received in good condition unless otherwise noted.
Samples analyzed by EMSL Analytical, Inc 2235 Polvorosa Ave , Suite 230, San Leandro CA NVLAP Lab Code 101048-3, MA AA000201, WA C2007

EMSL Analytical, Inc
2235 Polvorosa Ave , Suite 230, San Leandro, CA 94577
Phone: (510) 895-3675 Fax: (510) 895-3680 Email: milpitaslab@emsl.com

Attn: **David Watts**
Geocon Consultants
6671 Brisa Street
Livermore, CA 94550

Fax: (925) 371-5915 Phone: (925) 371-5900
Project: **S9300-06-134**

Customer ID: GECN21
Customer PO: S9300-06-134
Received: 07/01/10 10:30 AM
EMSL Order: 091005815

EMSL Proj: S9300-06-**
Analysis Date: 7/9/2010

Test Report: Asbestos Analysis of Bulk Materials via EPA 600/R-93/116 Method using Polarized Light Microscopy

Sample	Description	Appearance	Non-Asbestos %	Fibrous	Non-Asbestos %	Non-Fibrous	Asbestos %	Type
0023-2A-Pipe Wrap *091005815-0015*		Black Non-Fibrous Homogeneous			100%	Non-fibrous (other)		**None Detected**
0023-3A-Shims *091005815-0016*		Black Fibrous Homogeneous			20%	Non-fibrous (other)	**80%**	**Chrysotile**
0042-1A-EJM *091005815-0017*		Brown Fibrous Homogeneous	40%	Cellulose	60%	Non-fibrous (other)		**None Detected**
0042-1B-EJM *091005815-0018*		Brown Fibrous Homogeneous	40%	Cellulose	60%	Non-fibrous (other)		**None Detected**
0042-2A-Pipe Wrap *091005815-0019*		Black Non-Fibrous Homogeneous			100%	Non-fibrous (other)		**None Detected**
0042-3A-Shims *091005815-0020*		Black Fibrous Homogeneous			20%	Non-fibrous (other)	**80%**	**Chrysotile**
0099-1A-EJM *091005815-0021*		Brown Fibrous Homogeneous	40%	Cellulose	60%	Non-fibrous (other)		**None Detected**

Initial report from 07/09/2010 14:45:19

Analyst(s)

Jorge Leon (32)

Baojia Ke, Laboratory Manager
or other approved signatory

Due to magnification limitations inherent in PLM, asbestos fibers in dimensions below the resolution capability of PLM may not be detected. Samples reported as <1% or none detected may require additional testing by TEM to confirm asbestos quantities. The above test report relates only to the items tested and may not be reproduced in any form without the express written approval of EMSL Analytical, Inc. EMSL's liability is limited to the cost of analysis. EMSL bears no responsibility for sample collection activities or analytical method limitations. Interpretation and use of test results are the responsibility of the client.Samples received in good condition unless otherwise noted.
Samples analyzed by EMSL Analytical, Inc 2235 Polvorosa Ave , Suite 230, San Leandro CA NVLAP Lab Code 101048-3, MA AA000201, WA C2007

EMSL Analytical, Inc
2235 Polvorosa Ave , Suite 230, San Leandro, CA 94577
Phone: (510) 895-3675 Fax: (510) 895-3680 Email: milpitaslab@emsl.com

Attn: **David Watts**
Geocon Consultants
6671 Brisa Street
Livermore, CA 94550

Fax: (925) 371-5915 Phone: (925) 371-5900
Project: **S9300-06-134**

Customer ID: GECN21
Customer PO: S9300-06-134
Received: 07/01/10 10:30 AM
EMSL Order: 091005815

EMSL Proj: S9300-06-**
Analysis Date: 7/9/2010

Test Report: Asbestos Analysis of Bulk Materials via EPA 600/R-93/116 Method using Polarized Light Microscopy

			Non-Asbestos				Asbestos
Sample	**Description**	**Appearance**	**%**	**Fibrous**	**%**	**Non-Fibrous**	**% Type**
0099-1B-EJM *091005815-0022*		Brown Fibrous Homogeneous	40%	Cellulose	60%	Non-fibrous (other)	**None Detected**
0094-1A-EJM *091005815-0023*		Brown Fibrous Homogeneous	40%	Cellulose	60%	Non-fibrous (other)	**None Detected**
0094-1B-EJM *091005815-0024*		Brown Fibrous Homogeneous	40%	Cellulose	60%	Non-fibrous (other)	**None Detected**
0150-1A-EJM *091005815-0025*		Brown Fibrous Homogeneous	40%	Cellulose	60%	Non-fibrous (other)	**None Detected**
0150-1B-EJM *091005815-0026*		Brown Fibrous Homogeneous	40%	Cellulose	60%	Non-fibrous (other)	**None Detected**
0134-1A-EJM *091005815-0027*		Brown Fibrous Homogeneous	40%	Cellulose	60%	Non-fibrous (other)	**None Detected**
0134-1B-EJM *091005815-0028*		Brown Fibrous Homogeneous	40%	Cellulose	60%	Non-fibrous (other)	**None Detected**

Initial report from 07/09/2010 14:45:19

Analyst(s)

Jorge Leon (32)

Baojia Ke, Laboratory Manager
or other approved signatory

Due to magnification limitations inherent in PLM, asbestos fibers in dimensions below the resolution capability of PLM may not be detected. Samples reported as <1% or none detected may require additional testing by TEM to confirm asbestos quantities. The above test report relates only to the items tested and may not be reproduced in any form without the express written approval of EMSL Analytical, Inc. EMSL's liability is limited to the cost of analysis. EMSL bears no responsibility for sample collection activities or analytical method limitations. Interpretation and use of test results are the responsibility of the client.Samples received in good condition unless otherwise noted.
Samples analyzed by EMSL Analytical, Inc 2235 Polvorosa Ave , Suite 230, San Leandro CA NVLAP Lab Code 101048-3, MA AA000201, WA C2007

EMSL Analytical, Inc
2235 Polvorosa Ave , Suite 230, San Leandro, CA 94577
Phone: (510) 895-3675 Fax: (510) 895-3680 Email: milpitaslab@emsl.com

Attn: **David Watts**
Geocon Consultants
6671 Brisa Street
Livermore, CA 94550

Fax: (925) 371-5915 Phone: (925) 371-5900
Project: **S9300-06-134**

Customer ID: GECN21
Customer PO: S9300-06-134
Received: 07/01/10 10:30 AM
EMSL Order: 091005815

EMSL Proj: S9300-06-**
Analysis Date: 7/9/2010

Test Report: Asbestos Analysis of Bulk Materials via EPA 600/R-93/116 Method using Polarized Light Microscopy

			Non-Asbestos				Asbestos	
Sample	**Description**	**Appearance**	**%**	**Fibrous**	**%**	**Non-Fibrous**	**%**	**Type**
0134-2A-Shims *091005815-0029*		Gray Fibrous Homogeneous			20%	Non-fibrous (other)	**80%**	**Chrysotile**
0077-1A-EJM *091005815-0030*		Brown Fibrous Homogeneous	40%	Cellulose	60%	Non-fibrous (other)	**None Detected**	
0077-1B-EJM *091005815-0031*		Brown Fibrous Homogeneous	40%	Cellulose	60%	Non-fibrous (other)	**None Detected**	
0077-2A-Shims *091005815-0032*		Gray/Black Fibrous Homogeneous			20%	Non-fibrous (other)	**80%**	**Chrysotile**

Initial report from 07/09/2010 14:45:19

Analyst(s)

Jorge Leon (32)

Baojia Ke, Laboratory Manager
or other approved signatory

Due to magnification limitations inherent in PLM, asbestos fibers in dimensions below the resolution capability of PLM may not be detected. Samples reported as <1% or none detected may require additional testing by TEM to confirm asbestos quantities. The above test report relates only to the items tested and may not be reproduced in any form without the express written approval of EMSL Analytical, Inc. EMSL's liability is limited to the cost of analysis. EMSL bears no responsibility for sample collection activities or analytical method limitations. Interpretation and use of test results are the responsibility of the client.Samples received in good condition unless otherwise noted.
Samples analyzed by EMSL Analytical, Inc 2235 Polvorosa Ave , Suite 230, San Leandro CA NVLAP Lab Code 101048-3, MA AA000201, WA C2007

THIS IS THE LAST PAGE OF THE REPORT.

July 09, 2010

Dave Watts
Geocon Consultants, Inc.
6671 Brisa Street
Livermore, CA 94550

TEL: (925) 371-5900
FAX: (925) 371-5915

ELAP No.: 1838
NELAP No.: 02107CA
NEVADA.: CA-401
CSDLAC No.: 10196

Workorder No.: 112524

RE: PLACER CO. BRIDGES, S9300-06-134

Attention: Dave Watts

Enclosed are the results for sample(s) received on July 01, 2010 by Advanced Technology Laboratories . The sample(s) are tested for the parameters as indicated in the enclosed chain of custody in accordance with the applicable laboratory certifications.

Thank you for the opportunity to service the needs of your company.

Please feel free to call me at (562)989-4045 if I can be of further assistance to your company.

Sincerely,

Eddie F. Rodriguez
Laboratory Director

The cover letter and the case narrative are an integral part of this analytical report and cannot be reproduced in part or in its entirety without written permission from the client and Advanced Technology Laboratories.

CLIENT: Geocon Consultants, Inc.
Project: PLACER CO. BRIDGES, S9300-06-134
Lab Order: 112524

CASE NARRATIVE

Analytical Comments for Method 6010

Dilution was necessary for samples 112524-002A, 112524-003A, 112524-005A, 112524-006A and 112524-008A, due to sample matrix.

Advanced Technology Laboratories
3275 Walnut Avenue, Signal Hill, CA 90755 Tel: 562. 989.4045 Fax: 562.989.4040

Advanced Technology Laboratories

ANALYTICAL RESULTS

Print Date: *09-Jul-10*

CLIENT: Geocon Consultants, Inc.
Project: PLACER CO. BRIDGES, S9300-06-134
Lab Order: 112524

Lab ID: 112524-001 **Collection Date:** 6/29/2010 8:00:00 AM
Client Sample ID: 0083-P1 **Matrix:** PAINT CHIPS

Analyses	Result	PQL	Qual	Units	DF	Date Analyzed
ICP METALS						
EPA 3050B			**EPA 6010B**			
RunID: ICP8_100706C	QC Batch: 65194			PrepDate:	7/6/2010	Analyst: **SRB**
Lead	9.1	2.0		mg/Kg	1	7/7/2010 11:37 AM

Lab ID: 112524-002 **Collection Date:** 6/29/2010 8:00:00 AM
Client Sample ID: 0083-P2 **Matrix:** PAINT CHIPS

Analyses	Result	PQL	Qual	Units	DF	Date Analyzed
ICP METALS						
EPA 3050B			**EPA 6010B**			
RunID: ICP8_100706C	QC Batch: 65194			PrepDate:	7/6/2010	Analyst: **SRB**
Lead	7700	10		mg/Kg	5	7/7/2010 11:42 AM

Lab ID: 112524-003 **Collection Date:** 6/29/2010 10:17:00 AM
Client Sample ID: 0038-P1 **Matrix:** PAINT CHIPS

Analyses	Result	PQL	Qual	Units	DF	Date Analyzed
ICP METALS						
EPA 3050B			**EPA 6010B**			
RunID: ICP8_100706C	QC Batch: 65194			PrepDate:	7/6/2010	Analyst: **SRB**
Lead	190000	200		mg/Kg	100	7/6/2010 06:24 PM

Lab ID: 112524-004 **Collection Date:** 6/30/2010 8:11:00 AM
Client Sample ID: 0099-P1 **Matrix:** PAINT CHIPS

Analyses	Result	PQL	Qual	Units	DF	Date Analyzed
ICP METALS						
EPA 3050B			**EPA 6010B**			
RunID: ICP8_100706C	QC Batch: 65194			PrepDate:	7/6/2010	Analyst: **SRB**
Lead	12	2.0		mg/Kg	1	7/7/2010 11:46 AM

Qualifiers:

B	Analyte detected in the associated Method Blank	E	Value above quantitation range
H	Holding times for preparation or analysis exceeded	ND	Not Detected at the Reporting Limit
S	Spike/Surrogate outside of limits due to matrix interference		Results are wet unless otherwise specified
DO	Surrogate Diluted Out		

Advanced Technology Laboratories
3275 Walnut Avenue, Signal Hill, CA 90755 Tel: 562. 989.4045 Fax: 562.989.4040

Advanced Technology Laboratories

ANALYTICAL RESULTS

Print Date: *09-Jul-10*

CLIENT: Geocon Consultants, Inc. **Lab Order:** 112524
Project: PLACER CO. BRIDGES, S9300-06-134

Lab ID: 112524-005 **Collection Date:** 6/30/2010 8:19:00 AM
Client Sample ID: 0099-P2 **Matrix:** PAINT CHIPS

Analyses	Result	PQL	Qual	Units	DF	Date Analyzed
ICP METALS						
EPA 3050B			**EPA 6010B**			
RunID: ICP8_100706C	QC Batch: 65194				PrepDate: 7/6/2010	Analyst: **SRB**
Lead	50000	200		mg/Kg	100	7/6/2010 06:33 PM

Lab ID: 112524-006 **Collection Date:** 6/30/2010 8:51:00 AM
Client Sample ID: 0099-P3 **Matrix:** PAINT CHIPS

Analyses	Result	PQL	Qual	Units	DF	Date Analyzed
ICP METALS						
EPA 3050B			**EPA 6010B**			
RunID: ICP8_100706C	QC Batch: 65194				PrepDate: 7/6/2010	Analyst: **SRB**
Lead	7500	20		mg/Kg	10	7/7/2010 11:52 AM

Lab ID: 112524-007 **Collection Date:** 6/30/2010 11:14:00 AM
Client Sample ID: 0150-P1 **Matrix:** PAINT CHIPS

Analyses	Result	PQL	Qual	Units	DF	Date Analyzed
ICP METALS						
EPA 3050B			**EPA 6010B**			
RunID: ICP8_100706C	QC Batch: 65194				PrepDate: 7/6/2010	Analyst: **SRB**
Lead	4.7	2.0		mg/Kg	1	7/7/2010 11:56 AM

Lab ID: 112524-008 **Collection Date:** 6/30/2010 11:51:00 AM
Client Sample ID: 0077-P1 **Matrix:** PAINT CHIPS

Analyses	Result	PQL	Qual	Units	DF	Date Analyzed
ICP METALS						
EPA 3050B			**EPA 6010B**			
RunID: ICP8_100706C	QC Batch: 65194				PrepDate: 7/6/2010	Analyst: **SRB**
Lead	150	4.0		mg/Kg	2	7/7/2010 12:01 PM

Qualifiers:

B	Analyte detected in the associated Method Blank	E	Value above quantitation range
H	Holding times for preparation or analysis exceeded	ND	Not Detected at the Reporting Limit
S	Spike/Surrogate outside of limits due to matrix interference		Results are wet unless otherwise specified
DO	Surrogate Diluted Out		

Advanced Technology Laboratories
3275 Walnut Avenue, Signal Hill, CA 90755 Tel: 562. 989.4045 Fax: 562.989.4040

Advanced Technology Laboratories

ANALYTICAL RESULTS

Print Date: *09-Jul-10*

CLIENT: Geocon Consultants, Inc.
Project: PLACER CO. BRIDGES, S9300-06-134

Lab Order: 112524

Lab ID: 112524-009
Client Sample ID: 0077-P2

Collection Date: 6/30/2010 11:59:00 AM
Matrix: PAINT CHIPS

Analyses	Result	PQL	Qual	Units	DF	Date Analyzed
ICP METALS						
	EPA 3050B			**EPA 6010B**		
RunID: ICP8_100706C	QC Batch: 65194				PrepDate: 7/6/2010	Analyst: **SRB**
Lead	4.9	2.0		mg/Kg	1	7/7/2010 12:06 PM

Qualifiers:

B	Analyte detected in the associated Method Blank	E	Value above quantitation range
H	Holding times for preparation or analysis exceeded	ND	Not Detected at the Reporting Limit
S	Spike/Surrogate outside of limits due to matrix interference		Results are wet unless otherwise specified
DO	Surrogate Diluted Out		

Advanced Technology Laboratories
3275 Walnut Avenue, Signal Hill, CA 90755 Tel: 562. 989.4045 Fax: 562.989.4040

CLIENT: Geocon Consultants, Inc.
Work Order: 112524
Project: PLACER CO. BRIDGES, S9300-06-134

ANALYTICAL QC SUMMARY REPORT

TestCode: 6010_S

Sample ID: **MB-65194** SampType: **MBLK** TestCode: **6010_S** Units: **mg/Kg** Prep Date: **7/6/2010** RunNo: **122815**
Client ID: **PBS** Batch ID: **65194** TestNo: **EPA 6010B** **EPA 3050B** Analysis Date: **7/6/2010** SeqNo: **1967291**

Analyte	Result	PQL	SPK value	SPK Ref Val	%REC	LowLimit	HighLimit	RPD Ref Val	%RPD	RPDLimit	Qual
Lead	0.378	1.0									

Sample ID: **LCS-65194** SampType: **LCS** TestCode: **6010_S** Units: **mg/Kg** Prep Date: **7/6/2010** RunNo: **122815**
Client ID: **LCSS** Batch ID: **65194** TestNo: **EPA 6010B** **EPA 3050B** Analysis Date: **7/6/2010** SeqNo: **1967292**

Analyte	Result	PQL	SPK value	SPK Ref Val	%REC	LowLimit	HighLimit	RPD Ref Val	%RPD	RPDLimit	Qual
Lead	46.970	1.0	50.00	0.3780	93.2	80	120				

Sample ID: **112508-001A-DUP** SampType: **DUP** TestCode: **6010_S** Units: **mg/Kg** Prep Date: **7/6/2010** RunNo: **122815**
Client ID: **ZZZZZZ** Batch ID: **65194** TestNo: **EPA 6010B** **EPA 3050B** Analysis Date: **7/6/2010** SeqNo: **1967294**

Analyte	Result	PQL	SPK value	SPK Ref Val	%REC	LowLimit	HighLimit	RPD Ref Val	%RPD	RPDLimit	Qual
Lead	2.132	1.0						2.187	2.54	20	

Sample ID: **112508-001A-MS** SampType: **MS** TestCode: **6010_S** Units: **mg/Kg** Prep Date: **7/6/2010** RunNo: **122815**
Client ID: **ZZZZZZ** Batch ID: **65194** TestNo: **EPA 6010B** **EPA 3050B** Analysis Date: **7/6/2010** SeqNo: **1967295**

Analyte	Result	PQL	SPK value	SPK Ref Val	%REC	LowLimit	HighLimit	RPD Ref Val	%RPD	RPDLimit	Qual
Lead	100.168	1.0	125.0	2.187	78.4	34	126				

Sample ID: **112508-001A-MSD** SampType: **MSD** TestCode: **6010_S** Units: **mg/Kg** Prep Date: **7/6/2010** RunNo: **122815**
Client ID: **ZZZZZZ** Batch ID: **65194** TestNo: **EPA 6010B** **EPA 3050B** Analysis Date: **7/6/2010** SeqNo: **1967296**

Analyte	Result	PQL	SPK value	SPK Ref Val	%REC	LowLimit	HighLimit	RPD Ref Val	%RPD	RPDLimit	Qual
Lead	99.692	1.0	125.0	2.187	78.0	34	126	100.2	0.476	20	

Qualifiers:

B	Analyte detected in the associated Method Blank	E	Value above quantitation range	H	Holding times for preparation or analysis exceeded
ND	Not Detected at the Reporting Limit	R	RPD outside accepted recovery limits	S	Spike/Surrogate outside of limits due to matrix interference
DO	Surrogate Diluted Out		Calculations are based on raw values		

CHAIN OF CUSTODY RECORD

Advanced Technology Laboratories
3275 Walnut Avenue
Signal Hill, CA 90755
(562) 989-4045 • Fax (562) 989-4040

FOR LABORATORY USE ONLY:

P.O.#:

Logged By: Date: 7/1/10

Method of Transport: Client ☐ ATL ☐ CA OverN ☐ FEDEX ☐ Other: UPS

Sample Condition Upon Receipt (22.6)
1. CHILLED Y☐ N☑ 4. SEALED Y☐ N☑
2. HEADSPACE (VOA) Y☐ N☐ (NA) 5. # OF SPLS MATCH COC Y☑ N☐
3. CONTAINER INTACT Y☑ N☐ 6. PRESERVED Y☐ N☑

Client: GEOCON
Attn: D. WATTS
Address: 6671 BRISA St.
City LIVERMORE State CA Zip Code 94550
TEL: (925) 371-5900
FAX: (") " -5915

Project Name: PLACER Co. BRIDGES Project #: 59300-06-134 Sampler: (Printed Name) D. WATTS (Signature) [signature]

Relinquished by: (Signature and Printed Name)	Date	Time	Received by: (Signature and Printed Name)	Date	Time
[signature]	6/30/10	1615	UPS	6/30/10	1615
			[signature]	7/1/10	945

I hereby authorize ATL to perform the work indicated below:
Project Mgr/Submitter: D. WATTS 6/30/10
Print Name Date
[signature]
Signature

Send Report To:
Attn:
Co: SEE "CLIENT"
Address
City State Zip

Bill To:
Attn:
Co:
Address
City State Zip

Special Instructions/Comments:
PAINT CHIPS
ANTICIPATE SOLUBLE REQUESTS

Sample/Records - Archival & Disposal
Unless otherwise requested by client, all samples will be disposed 45 days after receipt and records will be disposed 1 year after submittal of final report.

Storage Fees (applies when storage is requested):
- Sample : $2.00 / sample / mo (after 45 days)
- Records : $1.00 / ATL workorder / mo (after 1 year)

Circle or Add Analysis(es) Requested

ITEM	LAB USE ONLY: Batch #: / Lab No.	Sample Description: Sample I.D. / Location	Date	Time	8081A (Pesticides)	8082 (PCB)	8260B (Volatiles)	8270C (BNA)	6010B (Total Metal) - Pb	8015B (GRO) / 8020 (BTEX)	8015B (DRO)	8021 (BTEX)	TITLE 22 / CAM 17 (6010 / 7000)	SOIL	WATER	GROUND WATER	WASTEWATER	PAINT CHIPS	TAT	Container(s) #	Container(s) Type	PRESERVATION	REMARKS
	112524-001	0083 - P1	6/29/10	0800				X										X	5-Day	1	Bag P		
	2	- P2																					
	3	0038 - P1		1017																			
	4	0099 - P1	6/30/10	0811																			
	5	- P2		0819																			
	6	- P3		0851																			
	7	0150 - P1	6/30/10	1114																			
	8	0077 - P1		1151																			
	9	- P2		1159																			

SPECIFY APPROPRIATE MATRIX

Q A / Q C: RTNE ☐ CT ☒ SWRCB ☐ Logcode ____ OTHER ____

• TAT starts 8 a.m. following day if samples received after 3 p.m.

TAT: A= Overnight ≤ 24 hr B= Emergency Next workday C= Critical 2 Workdays D= Urgent 3 Workdays E= Routine 7 Workdays

Container Types: T=Tube V=VOA L=Liter P=Pint J=Jar B=Tedlar G=Glass P=Plastic M=Metal

Preservatives: H=Hcl N=HNO_3 S=H_2SO_4 C=4°C Z=$Zn(AC)_2$ O=NaOH T=$Na_2S_2O_3$

DISTRIBUTION: White with report Yellow to folder Pink to submitter

July 19, 2010

ELAP No.: 1838
NELAP No.: 02107CA
NEVADA.: CA-401
CSDLAC No.: 10196

Workorder No.: 112524

Dave Watts
Geocon Consultants, Inc.
6671 Brisa Street
Livermore, CA 94550

TEL: (925) 371-5900
FAX: (925) 371-5915

RE: PLACER CO. BRIDGES, S9300-06-134

Attention: Dave Watts

Enclosed are the results for sample(s) received on July 01, 2010 by Advanced Technology Laboratories . The sample(s) are tested for the parameters as indicated in the enclosed chain of custody in accordance with the applicable laboratory certifications.

This is an addendum report. Please incorporate with documentation previously submitted.

Thank you for the opportunity to service the needs of your company.

Please feel free to call me at (562)989-4045 if I can be of further assistance to your company.

Sincerely,

Eddie F. Rodriguez
Laboratory Director

The cover letter is an integral part of this analytical report. This Laboratory Report cannot be reproduced in part or in its entirety without written permission from the client and Advanced Technology Laboratories.

Advanced Technology Laboratories
3275 Walnut Avenue Signal Hill, CA 90755 Tel: 562 989-4045 Fax: 562 989-4040

CLIENT: Geocon Consultants, Inc.
Project: PLACER CO. BRIDGES, S9300-06-134
Lab Order: 112524

CASE NARRATIVE

Analytical Comments for Method 7420

Dilution was necessary for samples 112524-003A and 112524-006A, due to sample matrix.

Advanced Technology Laboratories
3275 Walnut Avenue, Signal Hill, CA 90755 Tel: 562. 989.4045 Fax: 562.989.4040

Advanced Technology Laboratories

Date: 7/19/2010

ANALYTICAL RESULTS

LEAD BY ATOMIC ABSORPTION (STLC)
WET/ EPA 7420

CLIENT:	Geocon Consultants, Inc.	**Lab Order:**	112524
Project:	PLACER CO. BRIDGES, S9300-06-134	**Date Received**	7/1/2010 9:45:00 AM
Project No:		**Matrix:**	Paint Chips
Analyte:	Lead	**Analyst:**	IL

Laboratory ID	Client Sample ID	Results	Units	QC Batch	PQL	DF	Date Collected	Date Analyzed
112524-008A	0077-P1	8.6	mg/L	65354	0.25	1	6/30/2010	7/15/2010

Qualifiers:

B	Analyte detected in the associated Method Blank	E	Value above quantitation range
H	Holding times for preparation or analysis exceeded	ND	Not Detected at the Reporting Limit
S	Spike/Surrogate outside of limits due to matrix interference		Results are wet unless otherwise specified
DO	Surrogate Diluted Out		

Advanced Technology Laboratories

3275 Walnut Avenue, Signal Hill, CA 90755 Tel: 562. 989.4045 Fax: 562.989.4040

Advanced Technology Laboratories

Date: 7/19/2010

ANALYTICAL RESULTS

LEAD BY ATOMIC ABSORPTION (TCLP)
EPA 1311/ 7420

CLIENT:	Geocon Consultants, Inc.	**Lab Order:**	112524
Project:	PLACER CO. BRIDGES, S9300-06-134	**Date Received**	7/1/2010 9:45:00 AM
Project No:		**Matrix:**	Paint Chips
Analyte:	Lead	**Analyst:**	IL

Laboratory ID	Client Sample ID	Results	Units	QC Batch	PQL	DF	Date Collected	Date Analyzed
112524-002A	0083-P2	1.0	mg/L	65519	0.25	1	6/29/2010	7/16/2010
112524-003A	0038-P1	67	mg/L	65519	2.5	2	6/29/2010	7/16/2010
112524-005A	0099-P2	3.2	mg/L	65519	0.25	1	6/30/2010	7/16/2010
112524-006A	0099-P3	58	mg/L	65519	2.5	10	6/30/2010	7/16/2010

Qualifiers:

B	Analyte detected in the associated Method Blank	E	Value above quantitation range
H	Holding times for preparation or analysis exceeded	ND	Not Detected at the Reporting Limit
S	Spike/Surrogate outside of limits due to matrix interference		Results are wet unless otherwise specified
DO	Surrogate Diluted Out		

Advanced Technology Laboratories

3275 Walnut Avenue, Signal Hill, CA 90755 Tel: 562. 989.4045 Fax: 562.989.4040

CLIENT: Geocon Consultants, Inc.
Work Order: 112524
Project: PLACER CO. BRIDGES, S9300-06-134

ANALYTICAL QC SUMMARY REPORT

TestCode: 7420_ST

Sample ID: **MB-65354A** SampType: **MBLK** TestCode: **7420_ST** Units: **mg/L** Prep Date: **7/13/2010** RunNo: **123172**
Client ID: **PBS** Batch ID: **65354** TestNo: **WET/ EPA 74 WET** Analysis Date: **7/15/2010** SeqNo: **1974249**

Analyte	Result	PQL	SPK value	SPK Ref Val	%REC	LowLimit	HighLimit	RPD Ref Val	%RPD	RPDLimit	Qual
Lead	ND	0.25									

Sample ID: **LCS-65354** SampType: **LCS** TestCode: **7420_ST** Units: **mg/L** Prep Date: **7/13/2010** RunNo: **123172**
Client ID: **LCSS** Batch ID: **65354** TestNo: **WET/ EPA 74 WET** Analysis Date: **7/15/2010** SeqNo: **1974250**

Analyte	Result	PQL	SPK value	SPK Ref Val	%REC	LowLimit	HighLimit	RPD Ref Val	%RPD	RPDLimit	Qual
Lead	4.899	0.25	5.000	0	98.0	80	120				

Sample ID: **112525-017A-DUP** SampType: **DUP** TestCode: **7420_ST** Units: **mg/L** Prep Date: **7/13/2010** RunNo: **123172**
Client ID: **ZZZZZZ** Batch ID: **65354** TestNo: **WET/ EPA 74 WET** Analysis Date: **7/15/2010** SeqNo: **1974260**

Analyte	Result	PQL	SPK value	SPK Ref Val	%REC	LowLimit	HighLimit	RPD Ref Val	%RPD	RPDLimit	Qual
Lead	2.816	0.25						2.789	0.973	20	

Sample ID: **112525-017A-MS** SampType: **MS** TestCode: **7420_ST** Units: **mg/L** Prep Date: **7/13/2010** RunNo: **123172**
Client ID: **ZZZZZZ** Batch ID: **65354** TestNo: **WET/ EPA 74 WET** Analysis Date: **7/15/2010** SeqNo: **1974261**

Analyte	Result	PQL	SPK value	SPK Ref Val	%REC	LowLimit	HighLimit	RPD Ref Val	%RPD	RPDLimit	Qual
Lead	7.494	0.25	5.000	2.789	94.1	80	120				

Sample ID: **MB-65354B** SampType: **MBLK** TestCode: **7420_ST** Units: **mg/L** Prep Date: **7/13/2010** RunNo: **123172**
Client ID: **PBS** Batch ID: **65354** TestNo: **WET/ EPA 74 WET** Analysis Date: **7/15/2010** SeqNo: **1974262**

Analyte	Result	PQL	SPK value	SPK Ref Val	%REC	LowLimit	HighLimit	RPD Ref Val	%RPD	RPDLimit	Qual
Lead	ND	0.25									

Qualifiers:

B	Analyte detected in the associated Method Blank	E	Value above quantitation range	H	Holding times for preparation or analysis exceeded
ND	Not Detected at the Reporting Limit	R	RPD outside accepted recovery limits	S	Spike/Surrogate outside of limits due to matrix interference
DO	Surrogate Diluted Out		Calculations are based on raw values		

CLIENT: Geocon Consultants, Inc.
Work Order: 112524
Project: PLACER CO. BRIDGES, S9300-06-134

ANALYTICAL QC SUMMARY REPORT

TestCode: 7420_ST

Sample ID: **112543-006A-DUP** SampType: **DUP** TestCode: **7420_ST** Units: **mg/L** Prep Date: **7/13/2010** RunNo: **123172**
Client ID: **ZZZZZZ** Batch ID: **65354** TestNo: **WET/ EPA 74 WET** Analysis Date: **7/15/2010** SeqNo: **1974273**

Analyte	Result	PQL	SPK value	SPK Ref Val	%REC	LowLimit	HighLimit	RPD Ref Val	%RPD	RPDLimit	Qual
Lead	3.380	0.25						3.379	0.0271	20	

Sample ID: **112543-006A-MS** SampType: **MS** TestCode: **7420_ST** Units: **mg/L** Prep Date: **7/13/2010** RunNo: **123172**
Client ID: **ZZZZZZ** Batch ID: **65354** TestNo: **WET/ EPA 74 WET** Analysis Date: **7/15/2010** SeqNo: **1974274**

Analyte	Result	PQL	SPK value	SPK Ref Val	%REC	LowLimit	HighLimit	RPD Ref Val	%RPD	RPDLimit	Qual
Lead	8.058	0.25	5.000	3.379	93.6	80	120				

Sample ID: **112543-006A-MSD** SampType: **MSD** TestCode: **7420_ST** Units: **mg/L** Prep Date: **7/13/2010** RunNo: **123172**
Client ID: **ZZZZZZ** Batch ID: **65354** TestNo: **WET/ EPA 74 WET** Analysis Date: **7/15/2010** SeqNo: **1974275**

Analyte	Result	PQL	SPK value	SPK Ref Val	%REC	LowLimit	HighLimit	RPD Ref Val	%RPD	RPDLimit	Qual
Lead	8.102	0.25	5.000	3.379	94.5	80	120	8.058	0.542	20	

Qualifiers:

B	Analyte detected in the associated Method Blank	E	Value above quantitation range	H	Holding times for preparation or analysis exceeded
ND	Not Detected at the Reporting Limit	R	RPD outside accepted recovery limits	S	Spike/Surrogate outside of limits due to matrix interference
DO	Surrogate Diluted Out		Calculations are based on raw values		

Advanced Technology Laboratories
3275 Walnut Avenue, Signal Hill, CA 90755 Tel: 562. 989.4045 Fax: 562.989.4040

CLIENT: Geocon Consultants, Inc.
Work Order: 112524
Project: PLACER CO. BRIDGES, S9300-06-134

ANALYTICAL QC SUMMARY REPORT

TestCode: 7420_TC

Sample ID: **MB-65519A** SampType: **MBLK** TestCode: **7420_TC** Units: **mg/L** Prep Date: **7/16/2010** RunNo: **123208**
Client ID: **PBS** Batch ID: **65519** TestNo: **EPA 1311/ 74 EPA3010A** Analysis Date: **7/16/2010** SeqNo: **1975090**

Analyte	Result	PQL	SPK value	SPK Ref Val	%REC	LowLimit	HighLimit	RPD Ref Val	%RPD	RPDLimit	Qual
Lead	ND	0.25									

Sample ID: **MB-65514A TCLP** SampType: **MBLK** TestCode: **7420_TC** Units: **mg/L** Prep Date: **7/16/2010** RunNo: **123208**
Client ID: **PBS** Batch ID: **65519** TestNo: **EPA 1311/ 74 EPA3010A** Analysis Date: **7/16/2010** SeqNo: **1975091**

Analyte	Result	PQL	SPK value	SPK Ref Val	%REC	LowLimit	HighLimit	RPD Ref Val	%RPD	RPDLimit	Qual
Lead	ND	0.25									

Sample ID: **LCS-65519** SampType: **LCS** TestCode: **7420_TC** Units: **mg/L** Prep Date: **7/16/2010** RunNo: **123208**
Client ID: **LCSS** Batch ID: **65519** TestNo: **EPA 1311/ 74 EPA3010A** Analysis Date: **7/16/2010** SeqNo: **1975092**

Analyte	Result	PQL	SPK value	SPK Ref Val	%REC	LowLimit	HighLimit	RPD Ref Val	%RPD	RPDLimit	Qual
Lead	1.022	0.25	1.000	0	102	80	120				

Sample ID: **112508-001A-DUP** SampType: **DUP** TestCode: **7420_TC** Units: **mg/L** Prep Date: **7/16/2010** RunNo: **123208**
Client ID: **ZZZZZZ** Batch ID: **65519** TestNo: **EPA 1311/ 74 EPA3010A** Analysis Date: **7/16/2010** SeqNo: **1975094**

Analyte	Result	PQL	SPK value	SPK Ref Val	%REC	LowLimit	HighLimit	RPD Ref Val	%RPD	RPDLimit	Qual
Lead	ND	0.25						0	0	20	

Sample ID: **112508-001A-MS** SampType: **MS** TestCode: **7420_TC** Units: **mg/L** Prep Date: **7/16/2010** RunNo: **123208**
Client ID: **ZZZZZZ** Batch ID: **65519** TestNo: **EPA 1311/ 74 EPA3010A** Analysis Date: **7/16/2010** SeqNo: **1975095**

Analyte	Result	PQL	SPK value	SPK Ref Val	%REC	LowLimit	HighLimit	RPD Ref Val	%RPD	RPDLimit	Qual
Lead	2.360	0.25	2.500	0	94.4	70	130				

Qualifiers:

B	Analyte detected in the associated Method Blank	E	Value above quantitation range	H	Holding times for preparation or analysis exceeded
ND	Not Detected at the Reporting Limit	R	RPD outside accepted recovery limits	S	Spike/Surrogate outside of limits due to matrix interference
DO	Surrogate Diluted Out		Calculations are based on raw values		

Advanced Technology Laboratories
3275 Walnut Avenue, Signal Hill, CA 90755 Tel: 562. 989.4045 Fax: 562.989.4040

CLIENT: Geocon Consultants, Inc.
Work Order: 112524
Project: PLACER CO. BRIDGES, S9300-06-134

ANALYTICAL QC SUMMARY REPORT

TestCode: 7420_TC

Sample ID: **112670-001E-DUP** SampType: **DUP** TestCode: **7420_TC** Units: **mg/L** Prep Date: **7/16/2010** RunNo: **123208**
Client ID: **ZZZZZZ** Batch ID: **65519** TestNo: **EPA 1311/ 74 EPA3010A** Analysis Date: **7/16/2010** SeqNo: **1975101**

Analyte	Result	PQL	SPK value	SPK Ref Val	%REC	LowLimit	HighLimit	RPD Ref Val	%RPD	RPDLimit	Qual
Lead	ND	0.25						0	0	20	

Sample ID: **112670-001E-MS** SampType: **MS** TestCode: **7420_TC** Units: **mg/L** Prep Date: **7/16/2010** RunNo: **123208**
Client ID: **ZZZZZZ** Batch ID: **65519** TestNo: **EPA 1311/ 74 EPA3010A** Analysis Date: **7/16/2010** SeqNo: **1975102**

Analyte	Result	PQL	SPK value	SPK Ref Val	%REC	LowLimit	HighLimit	RPD Ref Val	%RPD	RPDLimit	Qual
Lead	2.562	0.25	2.500	0	102	70	130				

Sample ID: **112670-001E-MSD** SampType: **MSD** TestCode: **7420_TC** Units: **mg/L** Prep Date: **7/16/2010** RunNo: **123208**
Client ID: **ZZZZZZ** Batch ID: **65519** TestNo: **EPA 1311/ 74 EPA3010A** Analysis Date: **7/16/2010** SeqNo: **1975103**

Analyte	Result	PQL	SPK value	SPK Ref Val	%REC	LowLimit	HighLimit	RPD Ref Val	%RPD	RPDLimit	Qual
Lead	2.574	0.25	2.500	0	103	70	130	2.562	0.472	20	

Sample ID: **MB-65519B** SampType: **MBLK** TestCode: **7420_TC** Units: **mg/L** Prep Date: **7/16/2010** RunNo: **123208**
Client ID: **PBS** Batch ID: **65519** TestNo: **EPA 1311/ 74 EPA3010A** Analysis Date: **7/16/2010** SeqNo: **1975104**

Analyte	Result	PQL	SPK value	SPK Ref Val	%REC	LowLimit	HighLimit	RPD Ref Val	%RPD	RPDLimit	Qual
Lead	ND	0.25									

Sample ID: **MB-65514B TCLP** SampType: **MBLK** TestCode: **7420_TC** Units: **mg/L** Prep Date: **7/16/2010** RunNo: **123208**
Client ID: **PBS** Batch ID: **65519** TestNo: **EPA 1311/ 74 EPA3010A** Analysis Date: **7/16/2010** SeqNo: **1975105**

Analyte	Result	PQL	SPK value	SPK Ref Val	%REC	LowLimit	HighLimit	RPD Ref Val	%RPD	RPDLimit	Qual
Lead	ND	0.25									

Qualifiers:

B	Analyte detected in the associated Method Blank	E	Value above quantitation range	H	Holding times for preparation or analysis exceeded
ND	Not Detected at the Reporting Limit	R	RPD outside accepted recovery limits	S	Spike/Surrogate outside of limits due to matrix interference
DO	Surrogate Diluted Out		Calculations are based on raw values		

Advanced Technology Laboratories
3275 Walnut Avenue, Signal Hill, CA 90755 Tel: 562. 989.4045 Fax: 562.989.4040

Rachelle Arada

From: Diane Galvan
Sent: Monday, July 12, 2010 8:38 AM
To: Rachelle Arada
Subject: Fw: Results/EDD - PLACER CO. BRIDGES (112524)

Sent via BlackBerry by AT&T

From: "David Watts" <watts@geoconinc.com>
Date: Mon, 12 Jul 2010 04:46:36 -0700
To: 'Diane Galvan'<diane@atlglobal.com>
Subject: RE: Results/EDD - PLACER CO. BRIDGES (112524)

TCLPs on samples that failed TTLC.
WETS on samples with results at or above 50 that did not fail TTLC.
Same TAT as CofC. Thanks.

From: Diane Galvan [mailto:diane@atlglobal.com]
Sent: Friday, July 09, 2010 3:09 PM
To: watts@geoconinc.com
Subject: Results/EDD - PLACER CO. BRIDGES (112524)

Hi Dave,

Here are the results and Excel EDD.

Thanks,

Diane Galvan
Project Coordinator

Advanced Technology Laboratories
www.atlglobal.com
Tel: (562) 989-4045 ext. 238
Fax: (562) 989-4040

Advanced Technology Laboratories is a full-service environmental lab providing organic and inorganic analyses of soil, water, wastewater, storm water and hazardous waste samples. ATL is accredited by the State of California, NELAP and State of Nevada and holds various SBE, DBE and MBE certificates and a USDA soil permit. ATL takes pride in providing our customers with quick turnaround time, excellent customer service and defensible data while offering very competitive rates. *Advanced Technology Labs - Your Partner for Quality Environmental Testing*

This message is intended for the use of the individual or entity to which it is addressed. This may contain information that is privileged, confidential, and exempt from disclosure under applicable law. If the reader of this message is not the intended recipient, or the employee or agent responsible for delivering the message to the intended recipient, you are hereby notified that any dissemination, distribution or copying of this communication is strictly prohibited. If you have received this communication in error, please notify us immediately by telephone and delete the original message. Thank you.

July 26, 2010

ELAP No.: 1838
NELAP No.: 02107CA
NEVADA.: CA-401
CSDLAC No.: 10196

Workorder No.: 112524

Dave Watts
Geocon Consultants, Inc.
6671 Brisa Street
Livermore, CA 94550

TEL: (925) 371-5900
FAX: (925) 371-5915

RE: PLACER CO. BRIDGES, S9300-06-134

Attention: Dave Watts

Enclosed are the results for sample(s) received on July 01, 2010 by Advanced Technology Laboratories . The sample(s) are tested for the parameters as indicated in the enclosed chain of custody in accordance with the applicable laboratory certifications.

This is an addendum report. Please incorporate with documentation previously submitted.

Thank you for the opportunity to service the needs of your company.

Please feel free to call me at (562)989-4045 if I can be of further assistance to your company.

Sincerely,

Eddie F. Rodriguez
Laboratory Director

The cover letter is an integral part of this analytical report. This Laboratory Report cannot be reproduced in part or in its entirety without written permission from the client and Advanced Technology Laboratories.

Advanced Technology Laboratories
3275 Walnut Avenue Signal Hill, CA 90755 Tel: 562 989-4045 Fax: 562 989-4040

Advanced Technology Laboratories

Date: 7/26/2010

ANALYTICAL RESULTS

LEAD BY ATOMIC ABSORPTION (TCLP)
EPA 1311/ 7420

CLIENT:	Geocon Consultants, Inc.	**Lab Order:**	112524
Project:	PLACER CO. BRIDGES, S9300-06-134	**Date Received**	7/1/2010 9:45:00 AM
Project No:		**Matrix:**	Paint Chips
Analyte:	Lead	**Analyst:**	IL

Laboratory ID	Client Sample ID	Results	Units	QC Batch	PQL	DF	Date Collected	Date Analyzed
112524-008A	0077-P1	0.27	mg/L	65856	0.25	1	6/30/2010	7/26/2010

Qualifiers:

B	Analyte detected in the associated Method Blank	E	Value above quantitation range
H	Holding times for preparation or analysis exceeded	ND	Not Detected at the Reporting Limit
S	Spike/Surrogate outside of limits due to matrix interference		Results are wet unless otherwise specified
DO	Surrogate Diluted Out		

Advanced Technology Laboratories

3275 Walnut Avenue, Signal Hill, CA 90755 Tel: 562. 989.4045 Fax: 562.989.4040

CLIENT: Geocon Consultants, Inc.
Work Order: 112524
Project: PLACER CO. BRIDGES, S9300-06-134

ANALYTICAL QC SUMMARY REPORT

TestCode: 7420_TC

Sample ID: **MB-65856A** SampType: **MBLK** TestCode: **7420_TC** Units: **mg/L** Prep Date: **7/26/2010** RunNo: **123650**
Client ID: **PBS** Batch ID: **65856** TestNo: **EPA 1311/ 74 EPA3010A** Analysis Date: **7/26/2010** SeqNo: **1984658**

Analyte	Result	PQL	SPK value	SPK Ref Val	%REC	LowLimit	HighLimit	RPD Ref Val	%RPD	RPDLimit	Qual
Lead	ND	0.25									

Sample ID: **MB-65841A TCLP** SampType: **MBLK** TestCode: **7420_TC** Units: **mg/L** Prep Date: **7/26/2010** RunNo: **123650**
Client ID: **PBS** Batch ID: **65856** TestNo: **EPA 1311/ 74 EPA3010A** Analysis Date: **7/26/2010** SeqNo: **1984659**

Analyte	Result	PQL	SPK value	SPK Ref Val	%REC	LowLimit	HighLimit	RPD Ref Val	%RPD	RPDLimit	Qual
Lead	ND	0.25									

Sample ID: **LCS-65856** SampType: **LCS** TestCode: **7420_TC** Units: **mg/L** Prep Date: **7/26/2010** RunNo: **123650**
Client ID: **LCSS** Batch ID: **65856** TestNo: **EPA 1311/ 74 EPA3010A** Analysis Date: **7/26/2010** SeqNo: **1984660**

Analyte	Result	PQL	SPK value	SPK Ref Val	%REC	LowLimit	HighLimit	RPD Ref Val	%RPD	RPDLimit	Qual
Lead	0.955	0.25	1.000	0	95.5	80	120				

Sample ID: **112525-031A-DUP** SampType: **DUP** TestCode: **7420_TC** Units: **mg/L** Prep Date: **7/26/2010** RunNo: **123650**
Client ID: **ZZZZZZ** Batch ID: **65856** TestNo: **EPA 1311/ 74 EPA3010A** Analysis Date: **7/26/2010** SeqNo: **1984669**

Analyte	Result	PQL	SPK value	SPK Ref Val	%REC	LowLimit	HighLimit	RPD Ref Val	%RPD	RPDLimit	Qual
Lead	ND	0.25						0	0	20	

Sample ID: **112525-031A-MS** SampType: **MS** TestCode: **7420_TC** Units: **mg/L** Prep Date: **7/26/2010** RunNo: **123650**
Client ID: **ZZZZZZ** Batch ID: **65856** TestNo: **EPA 1311/ 74 EPA3010A** Analysis Date: **7/26/2010** SeqNo: **1984670**

Analyte	Result	PQL	SPK value	SPK Ref Val	%REC	LowLimit	HighLimit	RPD Ref Val	%RPD	RPDLimit	Qual
Lead	2.658	0.25	2.500	0	106	70	130				

Qualifiers:

B	Analyte detected in the associated Method Blank	E	Value above quantitation range	H	Holding times for preparation or analysis exceeded
ND	Not Detected at the Reporting Limit	R	RPD outside accepted recovery limits	S	Spike/Surrogate outside of limits due to matrix interference
DO	Surrogate Diluted Out		Calculations are based on raw values		

Advanced Technology Laboratories
3275 Walnut Avenue, Signal Hill, CA 90755 Tel: 562. 989.4045 Fax: 562.989.4040

CLIENT: Geocon Consultants, Inc.
Work Order: 112524
Project: PLACER CO. BRIDGES, S9300-06-134

ANALYTICAL QC SUMMARY REPORT

TestCode: 7420_TC

Sample ID: **112525-031A-MSD** SampType: **MSD** TestCode: **7420_TC** Units: **mg/L** Prep Date: **7/26/2010** RunNo: **123650**
Client ID: **ZZZZZZ** Batch ID: **65856** TestNo: **EPA 1311/ 74 EPA3010A** Analysis Date: **7/26/2010** SeqNo: **1984671**

Analyte	Result	PQL	SPK value	SPK Ref Val	%REC	LowLimit	HighLimit	RPD Ref Val	%RPD	RPDLimit	Qual
Lead	2.686	0.25	2.500	0	107	70	130	2.658	1.03	20	

Qualifiers:

B	Analyte detected in the associated Method Blank	E	Value above quantitation range	H	Holding times for preparation or analysis exceeded
ND	Not Detected at the Reporting Limit	R	RPD outside accepted recovery limits	S	Spike/Surrogate outside of limits due to matrix interference
DO	Surrogate Diluted Out		Calculations are based on raw values		

Advanced Technology Laboratories
3275 Walnut Avenue, Signal Hill, CA 90755 Tel: 562. 989.4045 Fax: 562.989.4040

Diane Galvan

From: David Watts [watts@geoconinc.com]
Sent: Wednesday, July 21, 2010 8:39 AM
To: Diane Galvan
Subject: RE: Additional Results/EDD - PLACER CO. BRIDGES (112524)

TCLP on 0077-P1. 72-hr TAT. Thanks.

GEOCON
CONSULTANTS, INC.
GEOTECHNICAL ■ ENVIRONMENTAL ■ MATERIALS

Project No. S9300-06-186
April 30, 2012

Alicia Beyer, Task Order Manager
Caltrans District 3
Environmental Engineering Office
P.O. Box 911
703 B Street
Marysville, California 95901

Subject: ASBESTOS AND LEAD-CONTAINING PAINT SURVEY REPORT
GILARDI ROAD OC (BR. NO. 19-0101)
03-PLA-80, POST MILE 12.30
PLACER COUNTY, CALIFORNIA
CONTRACT NO. 03A1368, E-FIS 0300000473.1 (EA 03-3E1001)
TASK ORDER NO. 186

Dear Ms. Beyer:

In accordance with California Department of Transportation Contract No. 03A1368 and Task Order No. 186 (TO-186), we have performed an asbestos and lead-containing paint (LCP) survey of the subject bridge in Placer County, California. The scope of services included surveying the bridge for suspect asbestos-containing materials (ACM) and lead-containing paint, collecting bulk samples, and submitting the samples to laboratories for analyses.

PROJECT DESCRIPTION

The project consists of upgrading the Gilardi Road Overcrossing (OC), Br. No. 19-0101, at Post Mile (PM) 12.30 on Highway 80 in Placer County, California. The project location is depicted on the Vicinity Map, Figure 1, and Site Plan, Figure 2.

GENERAL OBJECTIVES

The scope of services outlined in TO-186 included the determination of the presence and quantity of asbestos and LCP at the project location prior to various improvements. Assuming that no asbestos is added during future operations, our survey would satisfy National Emissions Standards for Hazardous Air Pollutants (NESHAP) requirements. The information obtained from this investigation will be used by Caltrans for waste profiling, determining California Occupational Safety and Health Administration (Cal/OSHA) applicability, and coordinating asbestos and LCP disturbance activities.

BACKGROUND

Asbestos

The Code of Federal Regulations (CFR), 40 CFR 61, Subpart M, NESHAP and Federal Occupational Safety and Health Administration (FED OSHA) classify ACM as any material or product that contains *greater than* 1% asbestos. Nonfriable ACM is classified by NESHAP as either Category I or Category II material defined as follows:

- **Category I** – asbestos-containing packings, gaskets, resilient floor coverings, and asphalt roofing products.
- **Category II** – all remaining types of nonfriable asbestos-containing material not included in Category I that when dry, cannot be crumbled, pulverized, or reduced to powder by hand pressure.

Regulated asbestos-containing material (RACM), a hazardous waste when friable, is classified as any manufactured material that contains *greater than* 1% asbestos by dry weight *and* is:

- Friable (can be crumbled, pulverized, or reduced to powder by hand pressure); or
- Category I material that has become friable; or
- Category I material that has been subjected to sanding, grinding, cutting, or abrading; or
- Category II nonfriable material that has a high probability of becoming crumbled, pulverized, or reduced to a powder during demolition or renovation activities.

Activities that disturb materials containing *any* amount of asbestos are subject to certain requirements of the Cal/OSHA asbestos standard contained in Title 8, CCR Section 1529. Typically, removal or disturbance of more than 100 square feet of material containing more than 0.1% asbestos must be performed by a registered asbestos abatement contractor, but associated waste labeling is not required if the material contains 1% or less asbestos. When the asbestos content of a material exceeds 1%, virtually all requirements of the standard become effective.

Materials containing more than 1% asbestos are also subject to NESHAP regulations (40 CFR Part 61, Subpart M). RACM (friable ACM and nonfriable ACM that will become friable during demolition operations) must be removed from structures prior to demolition. Certain nonfriable ACM and materials containing 1% or less asbestos may remain in structures during demolition; however, there are waste handling/disposal issues and Cal/OSHA work requirements that must be addressed. Contractors are responsible for segregating and characterizing waste streams prior to disposal.

With respect to potential worker exposure, notification, and registration requirements, Cal/OSHA defines asbestos-containing construction material (ACCM) as construction material that contains more than 0.1% asbestos (Title 8, CCR 341.6).

Lead Paint

Construction activities (including demolition) that disturb materials or paints containing *any* amount of lead are subject to certain requirements of the Cal/OSHA lead standard contained in Title 8, CCR, Section 1532.1. Deteriorated paint is defined by Title 17, CCR, Division 1, Chapter 8, §35022 as a surface coating that is cracking, chalking, flaking, chipping, peeling, non-intact, failed, or otherwise separating from a substrate. Demolition of a deteriorated LCP component would require waste characterization and appropriate disposal. Intact LCP on a component is currently accepted by most landfills and recycling facilities; however, contractors are responsible for segregating and characterizing waste streams prior to disposal.

For a solid waste containing lead, the waste is classified as California hazardous when: 1) the representative total lead content equals or exceeds the respective Total Threshold Limit Concentration (TTLC) of 1,000 milligrams per kilogram (mg/kg); or 2) the representative soluble lead content equals or exceeds the respective Soluble Threshold Limit Concentration (STLC) of 5 milligrams per liter (mg/l) based on the standard Waste Extraction Test (WET). A waste has the potential for exceeding the lead STLC when the waste's representative total lead content is greater than or equal to ten times the respective STLC value since the WET uses a 1:10 dilution ratio. Hence, when total lead is detected at a concentration greater than or equal to 50 mg/kg, and assuming that 100 percent of the total lead is soluble, soluble lead analysis is required. Lead-containing waste is classified as "Resource, Conservation, and Recovery Act" (RCRA) hazardous, or Federal hazardous, when the soluble lead content equals or exceeds the Federal regulatory level of 5 mg/l based on the Toxicity Characteristic Leaching Procedure (TCLP).

The above regulatory criteria are based on chemical concentrations. Wastes may also be classified as hazardous based on other criteria such as ignitability; however, for the purposes of this investigation, toxicity (i.e., lead concentration) is the primary factor considered for waste classification since waste generated during the construction activities would not likely warrant testing for ignitability or other criteria. Waste that is classified as either California-hazardous or RCRA-hazardous requires management as a hazardous waste.

Potential hazards exist to workers who remove or cut through LCP coatings during demolition. Dust containing hazardous concentrations of lead may be generated during scraping or cutting materials coated with lead-containing paint. Torching of these materials may produce lead oxide fumes. Therefore, air monitoring and/or respiratory protection may be required during the demolition of materials coated with LCP. Guidelines regarding regulatory provisions for construction work where workers may be exposed to lead are presented in Title 8, CCR, Section 1532.1.

Architectural Drawings and Previous Survey Activities

We reviewed structure architectural plans and bridge maintenance records provided by Caltrans prior to field activities. We did not observe specifications or notes regarding the use of asbestos-containing materials or lead paint in the architectural plans and maintenance records provided. Previous asbestos survey reports were not available for our review.

SCOPE OF SERVICES

Mr. Chris Giuntoli, a California-Certified Asbestos Consultant (CAC), certification No. 02-3163 (expiration June 19, 2012), and Certified Lead Paint Inspector/Assessor and Project Monitor with the California Department of Public Health Services (DPH), certification number I-5522 (expiration June 14, 2012), performed the asbestos and LCP survey at the project location on March 23, 2012.

Asbestos

Suspect ACM were grouped into homogeneous areas with representative samples randomly collected from each. In addition, each potential ACM was evaluated for friability. A total of four bulk asbestos samples representing two suspect components were collected.

Our procedures for inspection and sampling in accordance with TO-186 are discussed below:

- Collected bulk asbestos samples after first wetting friable materials with a light mist of water. The samples were then cut from the substrate and transferred to labeled containers.
- Relinquished bulk asbestos samples to EMSL Analytical, Inc., a California-licensed and Caltrans-approved subcontractor, for asbestos analysis in accordance with United States Environmental Protection Agency (EPA) Test Method 600/R-93/116 using polarized light microscopy (PLM) under chain-of-custody protocol. EMSL Analytical, Inc. is a laboratory accredited by the National Institute of Standards and Technology National Voluntary Laboratory Accreditation Program (NIST-NVLAP) for bulk asbestos fiber analysis. The laboratory analyses were requested on a five-day turnaround time.

Approximate sample locations are presented on Figure 2. Materials represented by the samples collected are shown in the attached photographs.

Lead Paint

Two bulk paint samples were collected from suspect LCP observed at the project location. Our sampling procedures in accordance with TO-186 are discussed below:

- Collected bulk samples of suspect LCP using techniques presented in HUD guidelines. In addition, the painted areas were evaluated for evidence of deterioration such as flaking or cracking.
- Relinquished bulk LCP samples under chain-of-custody protocol to Advanced Technology Laboratories, a California-licensed and Caltrans-approved subcontractor, for lead analysis in accordance with EPA Test Method 6010B. Additionally, the samples were analyzed for TCLP lead by EPA Test Method 1311/7420. Advanced Technology Laboratories is accredited by the DPH for lead analysis. The laboratory analyses were requested on a five-day turnaround time.

Approximate sample locations are presented on Figure 2. Materials represented by the samples collected are shown in the attached photographs.

INVESTIGATIVE RESULTS

Asbestos

No asbestos was detected in samples of the suspect materials collected during our survey. Sample identification numbers, material descriptions, approximate quantities, friability assessments, and a summary of the analytical laboratory test results for asbestos are summarized below. Reproductions of the laboratory report and chain-of-custody documentation are attached.

Polarized Light Microscopy (PLM) - EPA Test Method 600/R-93/116				
Sample No.	**Description of Material**	**Approximate Quantity**	**Friable**	**Asbestos Content**
101-2A and B	Expansion joint fill material (abutments)	NA	NA	ND
101-3A and B	Expansion joint fill material (abutment bents at k-rail)	NA	NA	ND

NA = Not applicable (no asbestos detected)
ND = Not detected

Lead Paint

A sample representing approximately 100 square feet of peeling and flaking white paint on the bridge guardrails exhibited a total lead concentration of 1,300 mg/kg and a TCLP lead concentration of less than the laboratory reporting limit of 0.50 mg/l.

A sample representing intact yellow traffic striping exhibited a total lead concentration of 11,000 mg/kg and a TCLP lead concentration of 2.6 mg/l.

Sample identification numbers, descriptions, peeling and flaking quantities, and a summary of the analytical laboratory test results for paint are summarized below. Reproductions of the laboratory reports and chain-of-custody documentation are attached.

Total and Soluble Lead				
Sample No.	**Paint Description**	**Approximate Quantity Peeling/Flaking**	**Total Lead (mg/kg)**	**TCLP Lead (mg/l)**
101-P1	White guardrail paint	100 square feet	1,300	<0.50
101-P2	Yellow traffic striping	Intact	11,000	2.6

TCLP = Toxicity Characteristic Leaching Procedure (EPA Test Method 1311/7420)
mg/kg = milligrams per kilogram (EPA Test Method 6010B)
mg/l = milligrams per liter
< = Not detected at or above the indicated laboratory reporting limit

RECOMMENDATIONS

Asbestos

Since no asbestos was detected in samples collected during our survey, the Cal/OSHA asbestos standard does not apply for planned activities. In addition, demolition debris would not be considered a California hazardous waste based on asbestos content. However, written notification to U.S. EPA Region IX and the California Air Resources Board is required ten working days prior to commencement of *any* demolition activity (whether asbestos is present or not).

Lead Paint

Deteriorated white paint on the bridge guardrails sampled during our survey would be classified as a California hazardous waste based on lead content.

Yellow traffic striping sampled during our survey would be classified as a California hazardous waste based on lead content if stripped, blasted, or otherwise separated from the substrate.

We recommend that the deteriorated LCP on the guardrails be removed and disposed of prior to renovation, demolition, or other activities that would disturb the paint.

We recommend that the contractor be required to use personnel who have lead-related construction certification as supervisors or workers, as appropriate, from the California DPH for LCP removal work. Loose and peeling/flaking LCP require removal prior to demolition for waste segregation purposes: to separate potentially hazardous waste (Category III concentrated lead such as loose paint, paint sludge, vacuum debris, and vacuum filters) from non-hazardous demolition debris (Category II intact lead-painted architectural components). Category I waste is low lead waste (typically non-hazardous) such as construction materials, filtered wash water, and plastic sheeting. Contractors are responsible for informing the landfill of the contractor's intent to dispose of RCRA waste, California hazardous waste, and/or architectural components containing intact LCP. Some landfills may require additional waste characterization. Contractors are responsible for segregating and characterizing waste streams prior to disposal.

We recommend that all paints at the project location (graffiti, graffiti abatement, signage, etc.) be treated as lead-containing for purposes of determining the applicability of the Cal/OSHA lead standard during any future maintenance, renovation, and demolition activities. This recommendation is based on LCP sample results and the fact that lead was a common ingredient of paints manufactured before 1978 and is still an ingredient of some paints. In accordance with Title 8, CCR, Section 1532.1(p), written notification to the nearest Cal/OSHA district office is required at least 24 hours prior to certain lead-related work. Compliance and training requirements regarding construction activities where workers may be exposed to lead are presented in Title 8, CCR, Section 1532.1, subsections (e) and (l), respectively. Contractors are responsible for segregating and characterizing waste streams prior to disposal.

REPORT LIMITATIONS

The asbestos and LCP survey was conducted in conformance with generally accepted standards of practice for identifying and evaluating asbestos and LCP in structures. The survey addressed only the structure identified above. Due to the nature of structure surveys, asbestos and LCP use, and laboratory analytical limitations, some ACM or LCP at the project location may not have been identified. Spaces such as cavities, voids, crawlspaces, and pipe chases may have been concealed to our investigator. Previous renovation work may have concealed or covered spaces or materials or may have partially demolished materials and left debris in inaccessible areas. Additionally, renovation activities may have partially replaced ACM with indistinguishable non-ACM. Asbestos and/or LCP may exist in areas of the structure that were not accessible or sampled in conjunction with this TO.

During renovation or demolition operations, suspect materials may be uncovered which are different from those accessible for sampling during this assessment. Personnel in charge of renovation/demolition should be alerted to note materials uncovered during such activities that differ substantially from those included in this or previous assessment reports. If suspect ACM and/or LCP are found, additional sampling and analysis should be performed to determine if the materials contain asbestos or lead.

This report has been prepared exclusively for Caltrans. The information contained herein is only valid as of the date of the report and will require an update to reflect additional information obtained.

This report is not a comprehensive site characterization and should not be construed as such. The findings as presented in this report are predicated on the results of the limited sampling and laboratory testing performed. In addition, the information obtained is not intended to address potential impacts related to sources other than those specified herein. Therefore, the report should be deemed conclusive with respect to only the information obtained. We make no warranty, express or implied, with respect to the content of this report or any subsequent reports, correspondence or consultation. Geocon strived to perform the services summarized herein in accordance with the local standard of care in the geographic region at the time the services were rendered.

The contents of this report reflect the views of the author who is responsible for the facts and accuracy of the data presented herein. The contents do not necessarily reflect the official views or policies of the State of California or the Federal Highway Administration. This report does not constitute a standard, specification, or regulation.

Please contact us should you have any questions concerning the contents of this report or if we may be of further service.

Sincerely,

GEOCON CONSULTANTS, INC.

Chris Giuntoli, CAC
Senior Project Scientist

John E. Juhrend, PE, CEG
Project Manager

(2 + 2 CD) Addressee

Attachments: Figure 1, Vicinity Map
Figure 2, Site Plan
Site Photographs (1 through 9)
Analytical Laboratory Reports and Chain-of-custody Documentation

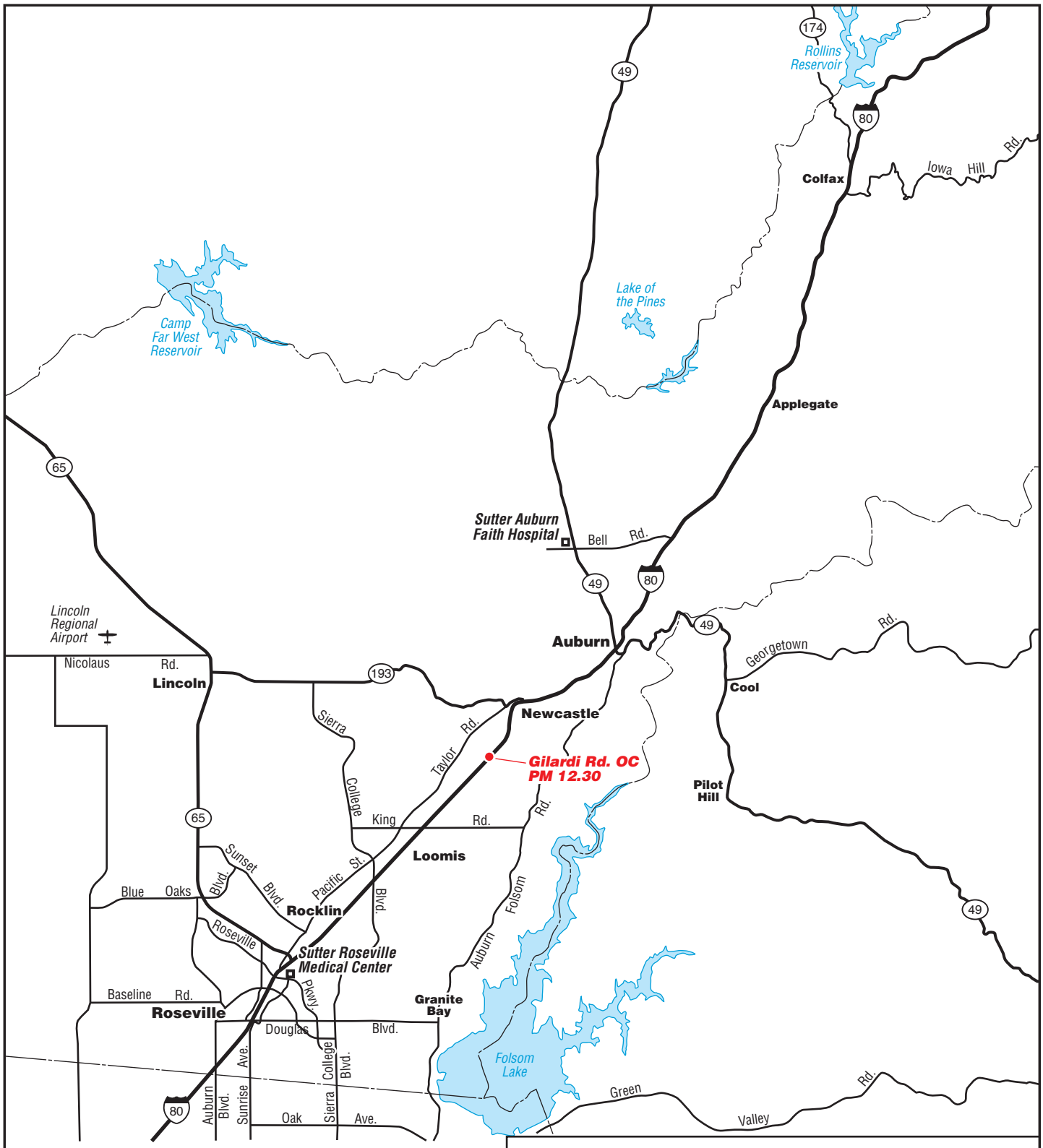

N

0 5

Scale in Miles

GEOCON CONSULTANTS, INC.

3160 GOLD VALLEY DR – SUITE 800 – RANCHO CORDOVA, CA 95742
PHONE 916.852.9118 – FAX 916.852.9132

Gilardi Road OC (Br. No. 19-0101)
03-PLA-80, Post Mile 12.30

Placer County, CA	**VICINITY MAP**
GEOCON Proj. No. S9300-06-186	
TO# 186, EA 03-3E1001	April 2012 — Figure 1

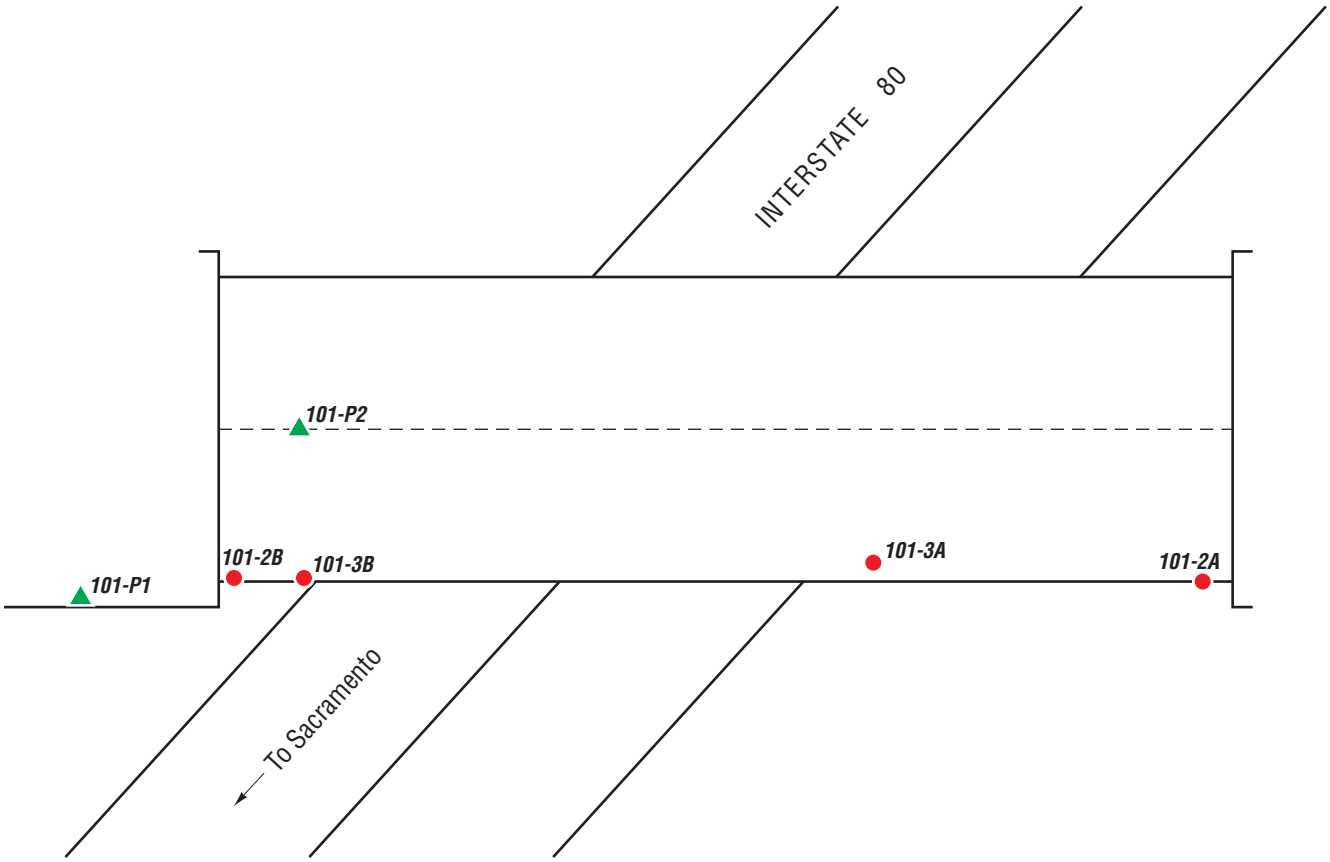

GILARDI ROAD OC
(BR. NO. 19-0101)

N

NOT TO SCALE

LEGEND:

- ● Approximate Asbestos Sample Location
- ▲ Approximate Paint Sample Location

GEOCON
CONSULTANTS, INC.
3160 GOLD VALLEY DR – SUITE 800 – RANCHO CORDOVA, CA 95742
PHONE 916.852.9118 – FAX 916.852.9132

Gilardi Road OC (Br. No. 19-0101)
03-PLA-80, Post Mile 12.30

Placer County, CA	**SITE PLAN**	
GEOCON Proj. No. S9300-06-186		
TO# 186, EA 03-3E1001	April 2012	Figure 2

Photo 1 – Gilardi Road OC (Br. No. 19-0101) in Placer County, CA

Photo 2 – Br. No. 19-0101 deck and barrier rails

Photo 3 – Br. No. 19-0101 abutment expansion joint fill material

GEOCON
CONSULTANTS, INC.
3160 GOLD VALLEY DR – SUITE 800 – RANCHO CORDOVA, CA 95742
PHONE 916.852.9118 – FAX 916.852.9132

PHOTOGRAPHS 1, 2, AND 3		
Gilardi Road OC (Br. No. 19-0101) 03-PLA-80 PM 12.30		
S9300-06-186	TO-186	April 2012

Photo 4 – Br. No. 19-0101 expansion joint fill material at abutment bent k-rails

Photo 5 – Br. No. 19-0101 traffic striping

Photo 6 – Br. No. 19-0101 white guardrail paint

Photo 7 – Br. No. 19-0101 typical elastomeric deck joint seal (non-suspect)

Photo 8 – Br. No. 19-0101 elastomeric deck expansion joint fill material (non-suspect)

Photo 9 – Br. No. 19-0101 bearings (non-suspect)

EMSL Analytical, Inc
2235 Polvorosa Ave , Suite 230, San Leandro, CA 94577
Phone/Fax: (510) 895-3675 / (510) 895-3680
http://www.emsl.com sanleandrolab@emsl.com

EMSL Order:	091203744
CustomerID:	GCNV25
CustomerPO:	S9300-06-186
ProjectID:	S9300-06-**

Attn: **Chris Giuntoli**
Geocon Consultants, Inc.
4010 Technology Way Ste D
Carson City, NV 89706

Phone:	(775) 888-9900
Fax:	(775) 888-9904
Received:	03/26/12 8:15 AM
Analysis Date:	3/29/2012
Collected:	3/23/2012

Project: **S9300-06-186**

Test Report: Asbestos Analysis of Bulk Materials via EPA 600/R-93/116 and/or EPA 600/M4-82-020 Method(s) using Polarized Light Microscopy

			Non-Asbestos				Asbestos
Sample	**Description**	**Appearance**	**%**	**Fibrous**	**%**	**Non-Fibrous**	**% Type**
101-1A-Paint *091203744-0001*	YELLOW PAINT	Yellow Non-Fibrous Homogeneous			100%	Non-fibrous (other)	**None Detected**
101-1B-Paint *091203744-0002*	YELLOW PAINT	Yellow Non-Fibrous Heterogeneous			100%	Non-fibrous (other)	**None Detected**
101-2A-Fill Material *091203744-0003*	EXPANSION JOINT FILL MATERIAL	Brown Fibrous Homogeneous	85%	Cellulose	15%	Non-fibrous (other)	**None Detected**
101-2B-Fill Material *091203744-0004*	EXPANSION JOINT FILL MATERIAL	Brown Fibrous Homogeneous	85%	Cellulose	15%	Non-fibrous (other)	**None Detected**
101-3A-Fill Material *091203744-0005*	EXPANSION JOINT FILL MATERIAL	Brown Fibrous Homogeneous	85%	Cellulose	15%	Non-fibrous (other)	**None Detected**
101-3B-Fill Material *091203744-0006*	EXPANSION JOINT FILL MATERIAL	Brown Fibrous Homogeneous	85%	Cellulose	15%	Non-fibrous (other)	**None Detected**

Analyst(s)
Matthew Batongbacal (6)

Baojia Ke, Laboratory Manager
or other approved signatory

EMSL maintains liability limited to cost of analysis. This report relates only to the samples reported and may not be reproduced, except in full, without written approval by EMSL. EMSL bears no responsibility for sample collection activities or analytical method limitations. Interpretation and use of test results are the responsibility of the client. This report must not be used by the client to claim product certification, approval, or endorsement by NVLAP, NIST or any agency of the federal government. Non-friable organically bound materials present a problem matrix and therefore EMSL recommends gravimetric reduction prior to analysis. Samples received in good condition unless otherwise noted. Estimated accuracy, precision and uncertainty data available upon request. Unless requested by the client, building materials manufactured with multiple layers (i.e. linoleum, wallboard, etc.) are reported as a single sample. None Detected = <1%
Samples analyzed by EMSL Analytical, Inc San Leandro, CA NVLAP Lab Code 101048-3, MA AA000201, WA C2007

Initial report from 03/29/2012 12:21:19

THIS IS THE LAST PAGE OF THE REPORT.

091203744

EMSL ANALYTICAL, INC.
LABORATORY • PRODUCTS • TRAINING

Asbestos Chain of Custody

EMSL Order Number (*Lab Use Only*): 091203744

EMSL ANALYTICAL, INC.
2235 POLVOROSA DR., STE. 230
SAN LEANDRO, CA 94577
PHONE: (510) 895-3675
FAX: (510) 895-3680

Company : GEOCON	EMSL-Bill to: ☒ Same ☐ Different If Bill to is Different note instructions in Comments** *Third Party Billing requires written authorization from third party*
Street: 4010 TECHNOLOGY WY, D	
City: CARSON CITY State/Province: NV	Zip/Postal Code: 89706 Country:
Report To (Name): CHRIS GIUNTOLI	Fax #:
Telephone #: 775-888-9900	Email Address: GIUNTOLI@GEOCONINC.COM
Project Name/Number: S9300-06-186	
Please Provide Results: ☐ Fax ☒ Email Purchase Order:	U.S. State Samples Taken:

Turnaround Time (TAT) Options* – Please Check

☐ 3 Hour ☐ 6 Hour ☐ 24 Hour ☐ 48 Hour ☐ 72 Hour ☐ 96 Hour ☒ 1 Week ☐ 2 Week

*For TEM Air 3 hours/6 hours, please call ahead to schedule.*There is a premium charge for 3 Hour TEM AHERA or EPA Level II TAT. You will be asked to sign an authorization form for this service. Analysis completed in accordance with EMSL's Terms and Conditions located in the Analytical Price Guide.

PCM - Air
- ☐ NIOSH 7400
- ☐ w/ OSHA 8hr. TWA

PLM - Bulk (reporting limit)
- ☒ PLM EPA 600/R-93/116 (<1%)
- ☐ PLM EPA NOB (<1%)

Point Count
- ☐ 400 (<0.25%) ☐ 1000 (<0.1%)

Point Count w/Gravimetric
- ☐ 400 (<0.25%) ☐ 1000 (<0.1%)
- ☐ NYS 198.1 (friable in NY)
- ☐ NYS 198.6 NOB (non-friable-NY)
- ☐ NIOSH 9002 (<1%)

TEM – Air ☐ **4-4.5hr TAT (AHERA only)**
- ☐ AHERA 40 CFR, Part 763
- ☐ NIOSH 7402
- ☐ EPA Level II
- ☐ ISO 10312

TEM - Bulk
- ☐ TEM EPA NOB
- ☐ NYS NOB 198.4 (non-friable-NY)
- ☐ Chatfield SOP
- ☐ TEM Mass Analysis-EPA 600 sec. 2.5

TEM – Water: EPA 100.2
- Fibers >10µm ☐ Waste ☐ Drinking
- All Fiber Sizes ☐ Waste ☐ Drinking

TEM- Dust
- ☐ Microvac - ASTM D 5755
- ☐ Wipe - ASTM D6480
- ☐ Carpet Sonication (EPA 600/J-93/167)

Soil/Rock/Vermiculite
- ☐ PLM CARB 435 - A (0.25% sensitivity)
- ☐ PLM CARB 435 - B (0.1% sensitivity)
- ☐ TEM CARB 435 - B (0.1% sensitivity)
- ☐ TEM CARB 435 - C (0.01% sensitivity)
- ☐ EPA Protocol (Semi-Quantitative)
- ☐ EPA Protocol (Quantitative)

Other:
- ☐

☐ **Check For Positive Stop – Clearly Identify Homogenous Group**

Samplers Name: CHRIS GIUNTOLI **Samplers Signature:** [signature]

Sample #	Sample Description	Volume/Area (Air) HA # (Bulk)	Date/Time Sampled
101-1A	YELLOW PAINT		3/23/12
101-1B	↓		↓
101-2A	EXPANSION JOINT FILL MATERIAL		↓
101-2B	↓		↓
101-3A	↓		↓
101-3B	↓		↓

Client Sample # (s): - **Total # of Samples:** 6

Relinquished (Client): [signature] **Date:** 3/24/12 **Time:** 1600

Received (Lab): [signature] **Date:** RECEIVED MAR 26 2012 **Time:** 0815 PX

Comments/Special Instructions:
SEPARATE LAB REPORT

ADVANCED TECHNOLOGY LABORATORIES

April 03, 2012

ELAP No.: 1838
NELAP No.: 02107CA
CSDLAC No.: 10196
ORELAP No.: CA300003

Chris Giuntoli
Geocon Consultants, Inc.
4010 Technology Way, Suite D
Carson City, NV 89706
Tel: (775) 888-9900
Fax:(775) 888-9904

Re: ATL Work Order Number : 1201086
Client Reference : I-80 BRIDGES, S9300-06-186

Enclosed are the results for sample(s) received on March 27, 2012 by Advanced Technology Laboratories. The sample(s) are tested for the parameters as indicated on the enclosed chain of custody in accordance with applicable laboratory certifications. The laboratory results contained in this report specifically pertains to the sample(s) submitted.

Thank you for the opportunity to serve the needs of your company. If you have any questions, please feel free to contact me or your Project Manager.

Sincerely,

for

Eddie Rodriguez
Laboratory Director

The cover letter and the case narrative are an integral part of this analytical report and its absence renders the report invalid. The report cannot be reproduced without written permission from the client and Advanced Technology Laboratories.

Geocon Consultants, Inc.		Project Number :	I-80 BRIDGES, S9300-06-186
4010 Technology Way, Suite D		Report To :	Chris Giuntoli
Carson City , NV 89706		Reported :	04/03/2012

SUMMARY OF SAMPLES

Sample ID	Laboratory ID	Matrix	Date Sampled	Date Received
101-P1	1201086-01	Paint Chips	3/23/12 0:00	3/27/12 9:19
101-P2	1201086-02	Paint Chips	3/23/12 0:00	3/27/12 9:19

Geocon Consultants, Inc.		Project Number :	I-80 BRIDGES, S9300-06-186
4010 Technology Way, Suite D		Report To :	Chris Giuntoli
Carson City , NV 89706		Reported :	04/03/2012

Total Metals by ICP-AES EPA 6010B

Analyte: Lead **Analyst: KK/HF**

Laboratory ID	Client Sample ID	Result	Units	PQL	MDL	Dilution	Batch	Prepared	Date/Time Analyzed	Notes
1201086-01	101-P1	**1300**	mg/kg	2.0	NA	1	B2C0766	03/28/2012	04/03/12 13:25	
1201086-02	101-P2	**11000**	mg/kg	20	NA	10	B2C0766	03/28/2012	04/03/12 14:34	

Geocon Consultants, Inc.		Project Number :	I-80 BRIDGES, S9300-06-186
4010 Technology Way, Suite D		Report To :	Chris Giuntoli
Carson City , NV 89706		Reported :	04/03/2012

QUALITY CONTROL SECTION

Total Metals by ICP-AES EPA 6010B - Quality Control

Analyte	Result (mg/kg)	PQL (mg/kg)	Spike Level	Source Result	% Rec	% Rec Limits	RPD	RPD Limit	Notes
Batch B2C0766 - EPA 3050B									
Blank (B2C0766-BLK1)					Prepared: 3/28/2012 Analyzed: 4/3/2012				
Lead	ND	1.0			NR				
LCS (B2C0766-BS1)					Prepared: 3/28/2012 Analyzed: 4/3/2012				
Lead	45	1.0	50.0		89.4	80 - 120			
Duplicate (B2C0766-DUP1)		**Source: 1201086-02**			Prepared: 3/28/2012 Analyzed: 4/3/2012				
Lead	7200	20		11000	NR		40.0	20	R
Matrix Spike (B2C0766-MS1)		**Source: 1201086-02**			Prepared: 3/28/2012 Analyzed: 4/3/2012				
Lead	5500	20	250	11000	-2070	46 - 116			M1
Matrix Spike Dup (B2C0766-MSD1)		**Source: 1201086-02**			Prepared: 3/28/2012 Analyzed: 4/3/2012				
Lead	14000	20	250	11000	1110	46 - 116	83.6	20	M1, R

Geocon Consultants, Inc.		Project Number :	I-80 BRIDGES, S9300-06-186
4010 Technology Way, Suite D		Report To :	Chris Giuntoli
Carson City , NV 89706		Reported :	04/03/2012

Notes and Definitions

R	RPD value outside acceptance criteria. Calculation is based on raw values.
M1	Matrix spike recovery outside of acceptance limit. The analytical batch was validated by the laboratory control sample.
ND	Analyte not detected at or above reporting limit
PQL	Practical Quantitation Limit
MDL	Method Detection Limit
NR	Not Reported
RPD	Relative Percent Difference

CHAIN OF CUSTODY RECORD

Advanced Technology Laboratories
3275 Walnut Avenue
Signal Hill, CA 90755
(562) 989-4045 • Fax (562) 989-4040

FOR LABORATORY USE ONLY:

P.O.#:

Logged By: Date: 3/27/12

Method of Transport: Client ☐ ATL ☐ CA OverN ☐ FEDEX ☐ Other: GSO

Sample Condition Upon Receipt: 1. CHILLED Y☐ N☑ 2. HEADSPACE (VOA) Y☐ N☐ 3. CONTAINER INTACT Y☐ N☐ 4. SEALED Y☐ N☐ 5. # OF SPLS MATCH COC Y☐ N☐ 6. PRESERVED Y☐ N☐

Client: GEOCON
Attn: CHRIS GIUNTOLI
Address: 4010 TECHNOLOGY WAY, SUITE D
City CARSON CITY State NV Zip Code 89706
TEL: (775) 888-9900
FAX: ( )

Project Name: I-80 BRIDGES
Project #: 59300-06-186
Sampler: (Printed Name) CHRIS GIUNTOLI (Signature)

Relinquished by: (Signature and Printed Name)	Date: 3/26/12	Time: 1200	Received by: (Signature and Printed Name)	Date: 3/27/12	Time: 9:15
Relinquished by: (Signature and Printed Name)	Date:	Time:	Received by: (Signature and Printed Name)	Date:	Time:
Relinquished by: (Signature and Printed Name)	Date:	Time:	Received by: (Signature and Printed Name)	Date:	Time:

I hereby authorize ATL to perform the work indicated below:
Project Mgr /Submitter:
CHRIS GIUNTOLI 3/23/12
Print Name Date
Signature

Send Report To:
Attn: SAME
Co:
Address
City State Zip

Bill To:
Attn: SAME
Co:
Address
City State Zip

Special Instructions/Comments:
*SOLUBLE LEAD MAY BE REQUESTED BASED ON TOTAL LEAD RESULTS

Sample/Records - Archival & Disposal
Unless otherwise requested by client, all samples will be disposed 45 days after receipt and records will be disposed 1 year after submittal of final report.

Storage Fees (applies when storage is requested):
- Sample : $2.00 / sample / mo (after 45 days)
- Records : $1.00 / ATL workorder / mo (after 1 year)

Circle or Add Analysis(es) Requested

SPECIFY APPROPRIATE MATRIX

Q A / Q C: RTNE ☐ CT ☐ SWRCB ☐ Logcode ____ OTHER ____

ITEM	LAB USE ONLY: Batch #: / Lab No.	Sample Description: Sample I.D. / Location	Date	Time	8081A (Pesticides)	8082 (PCB)	8260B (Volatiles)	8270C (BNA)	6010B (Total Metal)	8015B (GRO) / BTEX	8015B (DRO)	TOTAL LEAD*	SOIL	WATER	GROUND WATER	WASTEWATER	PAINT CHIPS	TAT	Container(s) #	Type	PRESERVATION	REMARKS
	1201086-01	101-P1	3/23/12									X					X	5-DAY	1	P B		
	1 2	101-P2	↓									↓					↓	↓	↓	↓		

• TAT starts 8 a.m. following day if samples received after 3 p.m.

TAT: A= Overnight ≤ 24 hr B= Emergency Next workday C= Critical 2 Workdays D= Urgent 3 Workdays E= Routine 7 Workdays

Container Types: T=Tube V=VOA L=Liter P=Pint J=Jar B=Tedlar G=Glass P=Plastic M=Metal

Preservatives: H=Hcl N=HNO_3 S=H_2SO_4 C=4°C Z=$Zn(AC)_2$ O=NaOH T=$Na_2S_2O_3$

ADVANCED TECHNOLOGY LABORATORIES

April 11, 2012

ELAP No.: 1838
NELAP No.: 02107CA
CSDLAC No.: 10196
ORELAP No.: CA300003

Chris Giuntoli
Geocon Consultants, Inc.
4010 Technology Way, Suite D
Carson City, NV 89706
Tel: (775) 888-9900
Fax:(775) 888-9904

Re: ATL Work Order Number : 1201086
Client Reference : I-80 BRIDGES, S9300-06-186

Enclosed are the results for sample(s) received on March 27, 2012 by Advanced Technology Laboratories. The sample(s) are tested for the parameters as indicated on the enclosed chain of custody in accordance with applicable laboratory certifications. The laboratory results contained in this report specifically pertains to the sample(s) submitted.

Thank you for the opportunity to serve the needs of your company. If you have any questions, please feel free to contact me or your Project Manager.

Sincerely,

Eddie Rodriguez
Laboratory Director

The cover letter and the case narrative are an integral part of this analytical report and its absence renders the report invalid. The report cannot be reproduced without written permission from the client and Advanced Technology Laboratories.

Geocon Consultants, Inc.		Project Number :	I-80 BRIDGES, S9300-06-186
4010 Technology Way, Suite D		Report To :	Chris Giuntoli
Carson City , NV 89706		Reported :	04/11/2012

SUMMARY OF SAMPLES

Sample ID	Laboratory ID	Matrix	Date Sampled	Date Received
101-P1	1201086-01	Paint Chips	3/23/12 0:00	3/27/12 9:19
101-P2	1201086-02	Paint Chips	3/23/12 0:00	3/27/12 9:19

Geocon Consultants, Inc.		Project Number :	I-80 BRIDGES, S9300-06-186
4010 Technology Way, Suite D		Report To :	Chris Giuntoli
Carson City , NV 89706		Reported :	04/11/2012

TCLP Lead by AA (Direct Aspiration) EPA 7420

Analyte: Lead **Analyst: VV**

Laboratory ID	Client Sample ID	Result	Units	PQL	MDL	Dilution	Batch	Prepared	Date/Time Analyzed	Notes
1201086-01	101-P1	**ND**	mg/L	0.50	NA	1	B2D0346	04/10/2012	04/10/12 14:00	
1201086-02	101-P2	**2.6**	mg/L	0.50	NA	1	B2D0346	04/10/2012	04/10/12 14:02	

Geocon Consultants, Inc.	Project Number : I-80 BRIDGES, S9300-06-186
4010 Technology Way, Suite D	Report To : Chris Giuntoli
Carson City , NV 89706	Reported : 04/11/2012

QUALITY CONTROL SECTION

TCLP Lead by AA (Direct Aspiration) EPA 7420 - Quality Control

Analyte	Result (mg/L)	PQL (mg/L)	Spike Level	Source Result	% Rec	% Rec Limits	RPD	RPD Limit	Notes
Batch B2D0346 - EPA 3010A									
Blank (B2D0346-BLK1)					Prepared: 4/10/2012 Analyzed: 4/10/2012				
Lead	ND	0.50			NR				
Blank (B2D0346-BLK2)					Prepared: 4/10/2012 Analyzed: 4/10/2012				
Lead	ND	0.50			NR				
Blank (B2D0346-BLK3)					Prepared: 4/10/2012 Analyzed: 4/10/2012				
Lead	ND	0.50			NR				
Blank (B2D0346-BLK4)					Prepared: 4/10/2012 Analyzed: 4/10/2012				
Lead	ND	0.50			NR				
LCS (B2D0346-BS1)					Prepared: 4/10/2012 Analyzed: 4/10/2012				
Lead	1.0	0.50	1.00		101	80 - 120			
Duplicate (B2D0346-DUP1)		**Source: 1201166-31**			Prepared: 4/10/2012 Analyzed: 4/10/2012				
Lead	0.37	0.50		0.34	NR		7.75	20	
Duplicate (B2D0346-DUP2)		**Source: 1201166-30**			Prepared: 4/10/2012 Analyzed: 4/10/2012				
Lead	0.48	0.50		0.37	NR		25.6	20	M1
Matrix Spike (B2D0346-MS1)		**Source: 1201166-31**			Prepared: 4/10/2012 Analyzed: 4/10/2012				
Lead	3.2	0.50	2.50	0.34	114	80 - 120			
Matrix Spike (B2D0346-MS2)		**Source: 1201166-30**			Prepared: 4/10/2012 Analyzed: 4/10/2012				
Lead	3.4	0.50	2.50	0.37	121	80 - 120			M1
Matrix Spike (B2D0346-MS3)		**Source: 1201083-01**			Prepared: 4/10/2012 Analyzed: 4/10/2012				
Lead	13		5.00	6.6	126	80 - 120			M1
Matrix Spike Dup (B2D0346-MSD1)		**Source: 1201166-31**			Prepared: 4/10/2012 Analyzed: 4/10/2012				
Lead	3.4	0.50	2.50	0.34	121	80 - 120	5.43	20	M1
Batch S2D0145 - B2D0346									
Instrument Blank (S2D0145-IBL1)					Prepared: 4/10/2012 Analyzed: 4/10/2012				
Lead	ND	0.50			NR				

Geocon Consultants, Inc.		Project Number :	I-80 BRIDGES, S9300-06-186
4010 Technology Way, Suite D		Report To :	Chris Giuntoli
Carson City , NV 89706		Reported :	04/11/2012

Notes and Definitions

M1	Matrix spike recovery outside of acceptance limit. The analytical batch was validated by the laboratory control sample.
ND	Analyte not detected at or above reporting limit
PQL	Practical Quantitation Limit
MDL	Method Detection Limit
NR	Not Reported
RPD	Relative Percent Difference

Diane Galvan

From: Chris Giuntoli [giuntoli@geoconinc.com]
Sent: Wednesday, April 04, 2012 2:41 PM
To: Diane Galvan
Subject: RE: Results/EDD/Invoice - I-80 BRIDGES (1201086)

Hi Diane,

For Work Order 1201086, please run TCLP lead for samples 101-P1 and 101-P2 on a 5-day TAT.

Thanks,
Chris

Project No. S9300-06-186
April 30, 2012

Alicia Beyer, Task Order Manager
Caltrans District 3
Environmental Engineering Office
703 B Street
Marysville, California 95901

Subject: ASBESTOS AND LEAD-CONTAINING PAINT SURVEY REPORT
NEWCASTLE ROAD OC (BR. NO. 19-0102)
03-PLA-80, POST MILE 13.81
PLACER COUNTY, CA
CONTRACT NO. 03A1368, E-FIS 0300000473.1 (EA 03-3E1001)
TASK ORDER NO. 186

Dear Ms. Beyer:

In accordance with California Department of Transportation Contract No. 03A1368 and Task Order No. 186, we have performed an asbestos and lead-containing paint (LCP) survey of the subject bridge in Placer County, California. The scope of services included surveying the bridge for suspect asbestos-containing materials (ACM) and lead-containing paint, collecting bulk samples, and submitting the samples to laboratories for analyses.

PROJECT DESCRIPTION

The project consists of upgrading the Newcastle Road Overcrossing (OC), Br. No. 19-0102, at Post Mile (PM) 13.81 on Highway 80 in Placer County, California. The project location is depicted on the Vicinity Map, Figure 1, and Site Plan, Figure 2.

GENERAL OBJECTIVES

The scope of services outlined in TO-186 included the determination of the presence and quantity of asbestos and LCP at the project location prior to various improvements. Assuming that no asbestos is added during future operations, our survey would satisfy National Emissions Standards for Hazardous Air Pollutants (NESHAP) requirements. The information obtained from this investigation will be used by Caltrans for waste profiling, determining California Occupational Safety and Health Administration (Cal/OSHA) applicability, and coordinating asbestos and LCP disturbance activities.

BACKGROUND

Asbestos

The Code of Federal Regulations (CFR), 40 CFR 61, Subpart M, NESHAP and Federal Occupational Safety and Health Administration (FED OSHA) classify ACM as any material or product that contains *greater than* 1% asbestos. Nonfriable ACM is classified by NESHAP as either Category I or Category II material defined as follows:

- **Category I** – asbestos-containing packings, gaskets, resilient floor coverings, and asphalt roofing products.
- **Category II** – all remaining types of nonfriable asbestos-containing material not included in Category I that when dry, cannot be crumbled, pulverized, or reduced to powder by hand pressure.

Regulated asbestos-containing material (RACM), a hazardous waste when friable, is classified as any manufactured material that contains *greater than* 1% asbestos by dry weight *and* is:

- Friable (can be crumbled, pulverized, or reduced to powder by hand pressure); or
- Category I material that has become friable; or
- Category I material that has been subjected to sanding, grinding, cutting, or abrading; or
- Category II nonfriable material that has a high probability of becoming crumbled, pulverized, or reduced to a powder during demolition or renovation activities.

Activities that disturb materials containing *any* amount of asbestos are subject to certain requirements of the Cal/OSHA asbestos standard contained in Title 8, CCR Section 1529. Typically, removal or disturbance of more than 100 square feet of material containing more than 0.1% asbestos must be performed by a registered asbestos abatement contractor, but associated waste labeling is not required if the material contains 1% or less asbestos. When the asbestos content of a material exceeds 1%, virtually all requirements of the standard become effective.

Materials containing more than 1% asbestos are also subject to NESHAP regulations (40 CFR Part 61, Subpart M). RACM (friable ACM and nonfriable ACM that will become friable during demolition operations) must be removed from structures prior to demolition. Certain nonfriable ACM and materials containing 1% or less asbestos may remain in structures during demolition; however, there are waste handling/disposal issues and Cal/OSHA work requirements that must be addressed. Contractors are responsible for segregating and characterizing waste streams prior to disposal.

With respect to potential worker exposure, notification, and registration requirements, Cal/OSHA defines asbestos-containing construction material (ACCM) as construction material that contains more than 0.1% asbestos (Title 8, CCR 341.6).

Lead Paint

Construction activities (including demolition) that disturb materials or paints containing *any* amount of lead are subject to certain requirements of the Cal/OSHA lead standard contained in Title 8, CCR, Section 1532.1. Deteriorated paint is defined by Title 17, CCR, Division 1, Chapter 8, §35022 as a surface coating that is cracking, chalking, flaking, chipping, peeling, non-intact, failed, or otherwise separating from a substrate. Demolition of a deteriorated LCP component would require waste characterization and appropriate disposal. Intact LCP on a component is currently accepted by most landfills and recycling facilities; however, contractors are responsible for segregating and characterizing waste streams prior to disposal.

For a solid waste containing lead, the waste is classified as California hazardous when: 1) the representative total lead content equals or exceeds the respective Total Threshold Limit Concentration (TTLC) of 1,000 milligrams per kilogram (mg/kg); or 2) the representative soluble lead content equals or exceeds the respective Soluble Threshold Limit Concentration (STLC) of 5 milligrams per liter (mg/l) based on the standard Waste Extraction Test (WET). A waste has the potential for exceeding the lead STLC when the waste's representative total lead content is greater than or equal to ten times the respective STLC value since the WET uses a 1:10 dilution ratio. Hence, when total lead is detected at a concentration greater than or equal to 50 mg/kg, and assuming that 100 percent of the total lead is soluble, soluble lead analysis is required. Lead-containing waste is classified as "Resource, Conservation, and Recovery Act" (RCRA) hazardous, or Federal hazardous, when the soluble lead content equals or exceeds the Federal regulatory level of 5 mg/l based on the Toxicity Characteristic Leaching Procedure (TCLP).

The above regulatory criteria are based on chemical concentrations. Wastes may also be classified as hazardous based on other criteria such as ignitability; however, for the purposes of this investigation, toxicity (i.e., lead concentration) is the primary factor considered for waste classification since waste generated during the construction activities would not likely warrant testing for ignitability or other criteria. Waste that is classified as either California-hazardous or RCRA-hazardous requires management as a hazardous waste.

Potential hazards exist to workers who remove or cut through LCP coatings during demolition. Dust containing hazardous concentrations of lead may be generated during scraping or cutting materials coated with lead-containing paint. Torching of these materials may produce lead oxide fumes. Therefore, air monitoring and/or respiratory protection may be required during the demolition of materials coated with LCP. Guidelines regarding regulatory provisions for construction work where workers may be exposed to lead are presented in Title 8, CCR, Section 1532.1.

Architectural Drawings and Previous Survey Activities

We reviewed structure architectural plans and bridge maintenance records provided by Caltrans prior to field activities. We did not observe specifications or notes regarding the use of asbestos-containing materials or lead paint in the architectural plans and maintenance records provided. Previous asbestos survey reports were not available for our review.

SCOPE OF SERVICES

Mr. Chris Giuntoli, a California-Certified Asbestos Consultant (CAC), certification No. 02-3163 (expiration June 19, 2012), and Certified Lead Paint Inspector/Assessor and Project Monitor with the California Department of Public Health Services (DPH), certification numbers I-5522 (expiration June 14, 2012), performed the asbestos and LCP survey at the project location on March 23, 2012.

Asbestos

Suspect ACM were grouped into homogeneous areas with representative samples randomly collected from each. In addition, each potential ACM was evaluated for friability. A total of four bulk asbestos samples representing two suspect components were collected.

Our procedures for inspection and sampling in accordance with TO-186 are discussed below:

- Collected bulk asbestos samples after first wetting friable materials with a light mist of water. The samples were then cut from the substrate and transferred to labeled containers.
- Relinquished bulk asbestos samples to EMSL Analytical, Inc., a California-licensed and Caltrans-approved subcontractor, for asbestos analysis in accordance with United States Environmental Protection Agency (EPA) Test Method 600/R-93/116 using polarized light microscopy (PLM) under chain-of-custody protocol. EMSL Analytical, Inc. is a laboratory accredited by the National Institute of Standards and Technology National Voluntary Laboratory Accreditation Program (NIST-NVLAP) for bulk asbestos fiber analysis. The laboratory analyses were requested on a five-day turnaround time.

Approximate sample locations are presented on Figure 2. Materials represented by the samples collected are shown in the attached photographs.

Lead Paint

One bulk paint sample was collected from suspect LCP observed at the project location. We did not observe deteriorated LCP during our survey. Our sampling procedures in accordance with TO-186 are discussed below:

- Collected the bulk sample of suspect LCP using techniques presented in HUD guidelines. In addition, the painted area was evaluated for evidence of deterioration such as flaking or cracking.
- Relinquished the bulk LCP sample under chain-of-custody protocol to Advanced Technology Laboratories, a California-licensed and Caltrans-approved subcontractor, for lead analysis in accordance with EPA Test Method 6010B. Advanced Technology Laboratories is accredited by the DPH for lead analysis. The laboratory analysis was requested on a five-day turnaround time.

The approximate sample location is presented on Figure 2. The material represented by the sample collected is shown in the attached photographs.

INVESTIGATIVE RESULTS

Asbestos

No asbestos was detected in samples of the suspect materials collected during our survey. Sample identification numbers, material descriptions, approximate quantities, friability assessments, and a summary of the analytical laboratory test results for asbestos are summarized below. Reproductions of the laboratory report and chain-of-custody documentation are attached.

Polarized Light Microscopy (PLM) - EPA Test Method 600/R-93/116				
Sample No.	**Description of Material**	**Approximate Quantity**	**Friable**	**Asbestos Content**
102-1A and B	Expansion joint fill material (abutments)	NA	NA	ND
102-2A and B	Expansion joint fill material (abutment bents at k-rail)	NA	NA	ND

NA = Not applicable (no asbestos detected)
ND = Not detected

Lead Paint

A sample representing intact yellow traffic striping exhibited a total lead concentration of 15 mg/kg.

The sample identification number, description, peeling and flaking quantity, and a summary of the analytical laboratory test result for paint are summarized below. Reproductions of the laboratory report and chain-of-custody documentation are attached.

Total Lead			
Sample No.	**Paint Description**	**Approximate Quantity Peeling/Flaking**	**Total Lead (mg/kg)**
102-P1	Yellow traffic striping	Intact	15

mg/kg = milligrams per kilogram (EPA Test Method 6010B)

RECOMMENDATIONS

Asbestos

Since no asbestos was detected in samples collected during our survey, the Cal/OSHA asbestos standard does not apply for planned activities. In addition, demolition debris would not be considered a California hazardous waste based on asbestos content. However, written notification to U.S. EPA Region IX and the California Air Resources Board is required ten working days prior to commencement of *any* demolition activity (whether asbestos is present or not).

Lead Paint

Yellow traffic striping sampled during our survey would not be classified as a California hazardous waste or Federal (RCRA) waste based on lead content if stripped, blasted, or otherwise separated from the substrate.

We recommend that all paints at the project location (graffiti, graffiti abatement, signage, etc.) be treated as lead-containing for purposes of determining the applicability of the Cal/OSHA lead standard during any future maintenance, renovation, and demolition activities. This recommendation is based on LCP sample result and the fact that lead was a common ingredient of paints manufactured before 1978 and is still an ingredient of some paints. In accordance with Title 8, CCR, Section 1532.1(p), written notification to the nearest Cal/OSHA district office is required at least 24 hours prior to certain lead-related work. Compliance and training requirements regarding construction activities where workers may be exposed to lead are presented in Title 8, CCR, Section 1532.1, subsections (e) and (l), respectively. Contractors are responsible for segregating and characterizing waste streams prior to disposal.

REPORT LIMITATIONS

The asbestos and LCP survey was conducted in conformance with generally accepted standards of practice for identifying and evaluating asbestos and LCP in structures. The survey addressed only the structure identified above. Due to the nature of structure surveys, asbestos and LCP use, and laboratory analytical limitations, some ACM or LCP at the project location may not have been identified. Spaces such as cavities, voids, crawlspaces, and pipe chases may have been concealed to our investigator. Previous renovation work may have concealed or covered spaces or materials or may have partially demolished materials and left debris in inaccessible areas. Additionally, renovation activities may have partially replaced ACM with indistinguishable non-ACM. Asbestos and/or LCP may exist in areas of the structure that were not accessible or sampled in conjunction with this TO.

During renovation or demolition operations, suspect materials may be uncovered which are different from those accessible for sampling during this assessment. Personnel in charge of renovation/demolition should be alerted to note materials uncovered during such activities that differ substantially from those included in this or previous assessment reports. If suspect ACM and/or LCP are found, additional sampling and analysis should be performed to determine if the materials contain asbestos or lead.

This report has been prepared exclusively for Caltrans. The information contained herein is only valid as of the date of the report and will require an update to reflect additional information obtained.

This report is not a comprehensive site characterization and should not be construed as such. The findings as presented in this report are predicated on the results of the limited sampling and laboratory testing performed. In addition, the information obtained is not intended to address potential impacts related to sources other than those specified herein. Therefore, the report should be deemed conclusive with respect to only the information obtained. We make no warranty, express or implied, with respect to the content of this report or any subsequent reports, correspondence or consultation. Geocon strived to perform the services summarized herein in accordance with the local standard of care in the geographic region at the time the services were rendered.

The contents of this report reflect the views of the author who is responsible for the facts and accuracy of the data presented herein. The contents do not necessarily reflect the official views or policies of the State of California or the Federal Highway Administration. This report does not constitute a standard, specification, or regulation.

Please contact us should you have any questions concerning the contents of this report or if we may be of further service.

Sincerely,

GEOCON CONSULTANTS INC.

Chris Giuntoli, CAC
Senior Project Scientist

John E. Juhrend, PE, CEG
Project Manager

(2 + 2 CD) Addressee

Attachments:
Figure 1, Vicinity Map
Figure 2, Site Plan
Site Photographs (1 through 6)
Analytical Laboratory Reports and Chain-of-custody Documentation

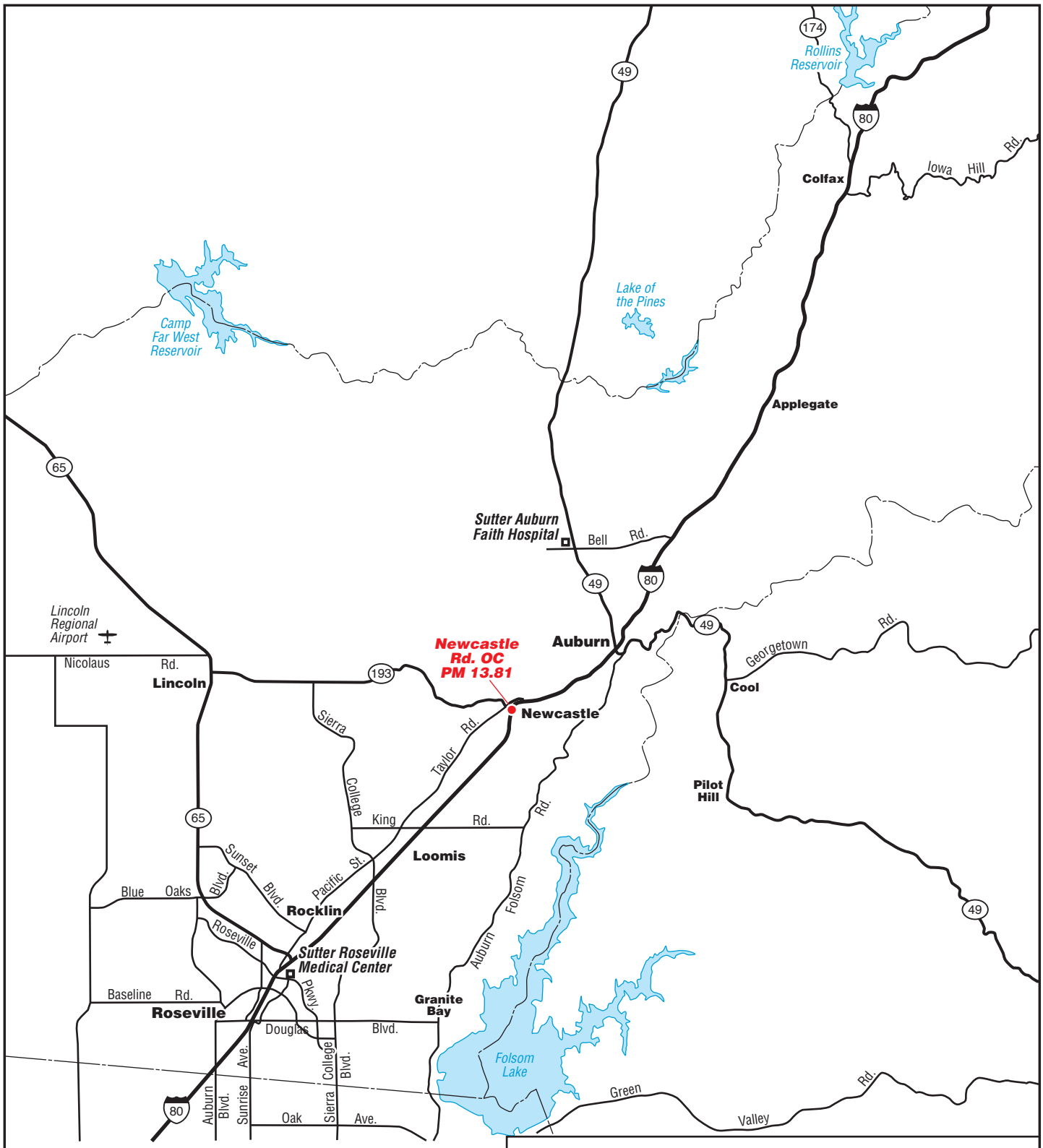

GEOCON CONSULTANTS, INC.

3160 GOLD VALLEY DR – SUITE 800 – RANCHO CORDOVA, CA 95742
PHONE 916.852.9118 – FAX 916.852.9132

Newcastle Road OC (Br. No. 19-0102)
03-PLA-80, Post Mile 13.81

Placer County, CA	**VICINITY MAP**
GEOCON Proj. No. S9300-06-186	
TO# 186, EA 03-3E1001	April 2012 — Figure 1

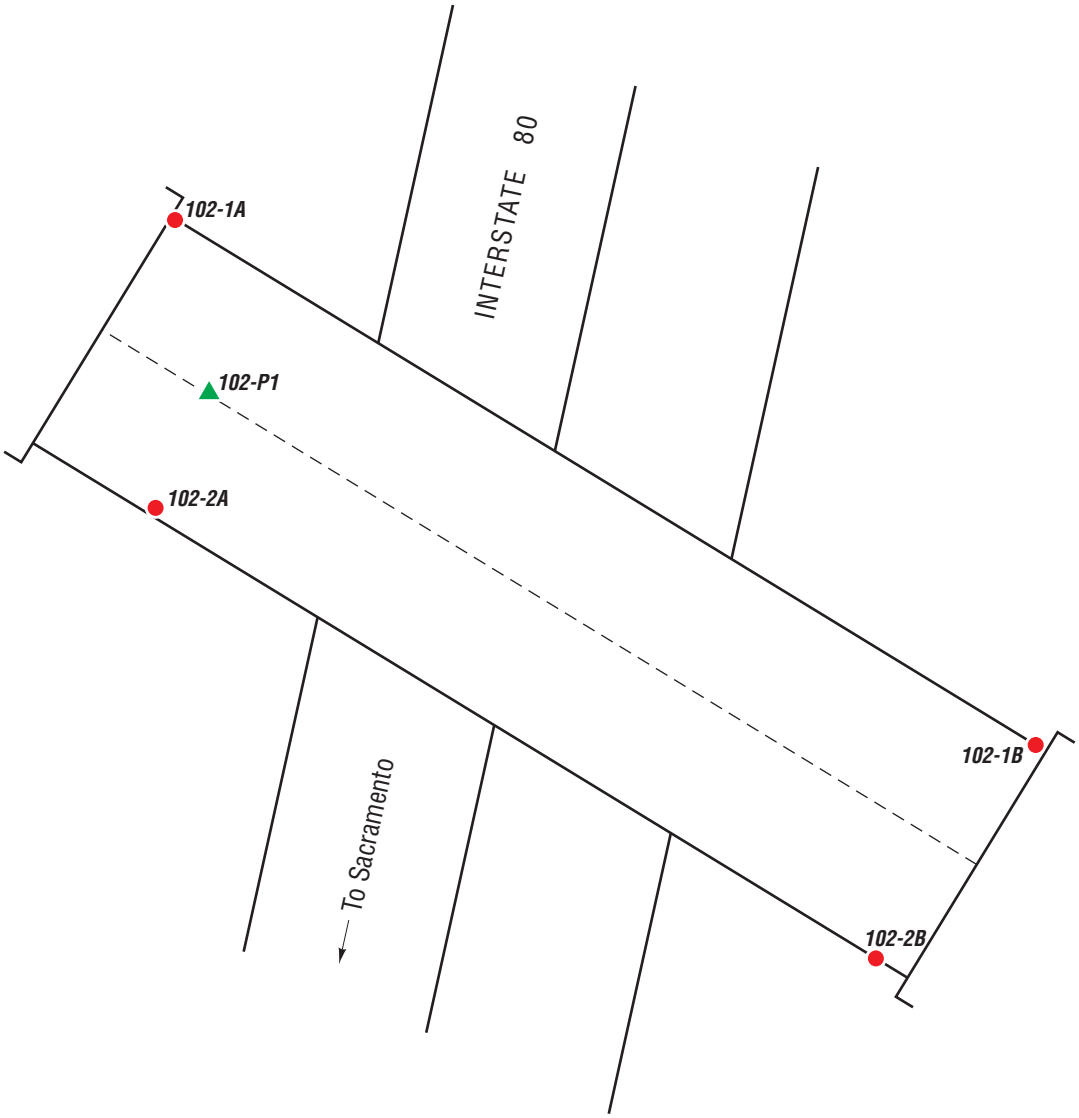

NEWCASTLE ROAD OC
(BR. NO. 19-0102)

N

NOT TO SCALE

LEGEND:

- ● Approximate Asbestos Sample Location
- ▲ Approximate Paint Sample Location

GEOCON
CONSULTANTS, INC.
3160 GOLD VALLEY DR – SUITE 800 – RANCHO CORDOVA, CA 95742
PHONE 916.852.9118 – FAX 916.852.9132

Newcastle Road OC (Br. No. 19-0102)
03-PLA-80, Post Mile 13.81

Placer County, CA	**SITE PLAN**	
GEOCON Proj. No. S9300-06-186		
TO# 186, EA 03-3E1001	April 2012	Figure 2

Photo 1 – Newcastle Road OC (Br. No. 19-0102) in Placer County, CA

Photo 2 – Br. No. 19-0102 abutment expansion joint fill material

Photo 3 – Br. No. 19-0102 expansion joint fill material at abutment bent k-rails

GEOCON
CONSULTANTS, INC.
3160 GOLD VALLEY DR – SUITE 800 – RANCHO CORDOVA, CA 95742
PHONE 916.852.9118 – FAX 916.852.9132

PHOTOGRAPHS 1, 2, AND 3		
Newcastle Road OC (Br. No. 19-0102) 03-PLA-80 PM 13.81		
S9300-06-186	TO #186	April 2012

Photo 4 – Br. No. 19-0102 yellow traffic striping

Photo 5 – Br. No. 19-0102 typical elastomeric abutment expansion joint fill material (non-suspect)

Photo 6 – Br. No. 19-0102 bearings (non-suspect)

GEOCON
CONSULTANTS, INC.
3160 GOLD VALLEY DR – SUITE 800 – RANCHO CORDOVA, CA 95742
PHONE 916.852.9118 – FAX 916.852.9132

PHOTOGRAPHS 4, 5, AND 6		
Newcastle Road OC (Br. No. 19-0102) 03-PLA-80 PM 13.81		
S9300-06-186	TO #186	April 2012

EMSL Analytical, Inc
2235 Polvorosa Ave , Suite 230, San Leandro, CA 94577
Phone/Fax: (510) 895-3675 / (510) 895-3680
http://www.emsl.com sanleandrolab@emsl.com

EMSL Order:	091203745
CustomerID:	GCNV25
CustomerPO:	S9300-06-186
ProjectID:	S9300-06-**

Attn: **Chris Giuntoli**
Geocon Consultants, Inc.
4010 Technology Way Ste D
Carson City, NV 89706

Phone:	(775) 888-9900
Fax:	(775) 888-9904
Received:	03/26/12 8:15 AM
Analysis Date:	3/29/2012
Collected:	3/23/2012

Project: **S9300-06-186**

Test Report: Asbestos Analysis of Bulk Materials via EPA 600/R-93/116 and/or EPA 600/M4-82-020 Method(s) using Polarized Light Microscopy

			Non-Asbestos				Asbestos
Sample	**Description**	**Appearance**	**%**	**Fibrous**	**%**	**Non-Fibrous**	**% Type**
102-1A-Fill Material *091203745-0001*	EXPANSION JOINT FILL MATERIAL	Brown Fibrous Homogeneous	85%	Cellulose	15%	Non-fibrous (other)	**None Detected**
102-1B-Fill Material *091203745-0002*	EXPANSION JOINT FILL MATERIAL	Brown Fibrous Homogeneous	85%	Cellulose	15%	Non-fibrous (other)	**None Detected**
102-2A-Fill Material *091203745-0003*	EXPANSION JOINT FILL MATERIAL	Brown Fibrous Homogeneous	85%	Cellulose	15%	Non-fibrous (other)	**None Detected**
102-2B-Fill Material *091203745-0004*	EXPANSION JOINT FILL MATERIAL	Brown Fibrous Homogeneous	85%	Cellulose	15%	Non-fibrous (other)	**None Detected**
102-3A-Paint *091203745-0005*	YELLOW PAINT	Yellow Non-Fibrous Heterogeneous			100%	Non-fibrous (other)	**None Detected**
102-3B-Paint *091203745-0006*	YELLOW PAINT	Yellow Fibrous Homogeneous			100%	Non-fibrous (other)	**None Detected**

Analyst(s)
Matthew Batongbacal (6)

Baojia Ke, Laboratory Manager
or other approved signatory

EMSL maintains liability limited to cost of analysis. This report relates only to the samples reported and may not be reproduced, except in full, without written approval by EMSL. EMSL bears no responsibility for sample collection activities or analytical method limitations. Interpretation and use of test results are the responsibility of the client. This report must not be used by the client to claim product certification, approval, or endorsement by NVLAP, NIST or any agency of the federal government. Non-friable organically bound materials present a problem matrix and therefore EMSL recommends gravimetric reduction prior to analysis. Samples received in good condition unless otherwise noted. Estimated accuracy, precision and uncertainty data available upon request. Unless requested by the client, building materials manufactured with multiple layers (i.e. linoleum, wallboard, etc.) are reported as a single sample. None Detected = <1%
Samples analyzed by EMSL Analytical, Inc San Leandro, CA NVLAP Lab Code 101048-3, MA AA000201, WA C2007

Initial report from 03/29/2012 13:58:31

THIS IS THE LAST PAGE OF THE REPORT.

091203745

EMSL ANALYTICAL, INC.
LABORATORY • PRODUCTS • TRAINING

Asbestos Chain of Custody

EMSL Order Number (*Lab Use Only*): 091203745

EMSL ANALYTICAL, INC.
2235 POLVOROSA DR., STE. 230
SAN LEANDRO, CA 94577
PHONE: (510) 895-3675
FAX: (510) 895-3680

Company : GEOCON	**EMSL-Bill to:** ☒ Same ☐ Different If Bill to is Different note instructions in Comments** *Third Party Billing requires written authorization from third party*
Street: 4010 TECHNOLOGY WAY, D	
City: CARSON CITY **State/Province:** NV	**Zip/Postal Code:** 89706 **Country:**
Report To (Name): CHRIS GIUNTOLI	**Fax #:**
Telephone #: 775-888-9900	**Email Address:** GIUNTOLI@GEOCONINC.COM
Project Name/Number: [redacted] 59300-06-186	
Please Provide Results: ☐ Fax ☒ Email **Purchase Order:**	**U.S. State Samples Taken:**

Turnaround Time (TAT) Options* – Please Check

☐ 3 Hour ☐ 6 Hour ☐ 24 Hour ☐ 48 Hour ☐ 72 Hour ☐ 96 Hour ☒ 1 Week ☐ 2 Week

**For TEM Air 3 hours/6 hours, please call ahead to schedule.*There is a premium charge for 3 Hour TEM AHERA or EPA Level II TAT. You will be asked to sign an authorization form for this service. Analysis completed in accordance with EMSL's Terms and Conditions located in the Analytical Price Guide.*

PCM - Air
- ☐ NIOSH 7400
- ☐ w/ OSHA 8hr. TWA

PLM - Bulk (reporting limit)
- ☒ PLM EPA 600/R-93/116 (<1%)
- ☐ PLM EPA NOB (<1%)

Point Count
- ☐ 400 (<0.25%) ☐ 1000 (<0.1%)

Point Count w/Gravimetric
- ☐ 400 (<0.25%) ☐ 1000 (<0.1%)
- ☐ NYS 198.1 (friable in NY)
- ☐ NYS 198.6 NOB (non-friable-NY)
- ☐ NIOSH 9002 (<1%)

TEM – Air ☐ **4-4.5hr TAT (AHERA only)**
- ☐ AHERA 40 CFR, Part 763
- ☐ NIOSH 7402
- ☐ EPA Level II
- ☐ ISO 10312

TEM - Bulk
- ☐ TEM EPA NOB
- ☐ NYS NOB 198.4 (non-friable-NY)
- ☐ Chatfield SOP
- ☐ TEM Mass Analysis-EPA 600 sec. 2.5

TEM – Water: EPA 100.2
- Fibers >10µm ☐ Waste ☐ Drinking
- All Fiber Sizes ☐ Waste ☐ Drinking

TEM- Dust
- ☐ Microvac - ASTM D 5755
- ☐ Wipe - ASTM D6480
- ☐ Carpet Sonication (EPA 600/J-93/167)

Soil/Rock/Vermiculite
- ☐ PLM CARB 435 - A (0.25% sensitivity)
- ☐ PLM CARB 435 - B (0.1% sensitivity)
- ☐ TEM CARB 435 - B (0.1% sensitivity)
- ☐ TEM CARB 435 - C (0.01% sensitivity)
- ☐ EPA Protocol (Semi-Quantitative)
- ☐ EPA Protocol (Quantitative)

Other:
- ☐

☐ **Check For Positive Stop – Clearly Identify Homogenous Group**

Samplers Name: CHRIS GIUNTOLI **Samplers Signature:** [signature]

Sample #	Sample Description	Volume/Area (Air) HA # (Bulk)	Date/Time Sampled
102-1A	EXPANSION JOINT FILL MATERIAL		3/23/12
102-1B	↓		↓
102-2A			
102-2B			
102-3A	YELLOW PAINT		
102-3B	↓		↓

Client Sample # (s): - **Total # of Samples:** 6

Relinquished (Client): [signature] **Date:** 3/23/12 **Time:** 1600

Received (Lab): [signature] **Date:** RECEIVED MAR 26 2012 **Time:** 0815 FX

Comments/Special Instructions:
SEPARATE LAB REPORT

ADVANCED TECHNOLOGY LABORATORIES

April 03, 2012

ELAP No.: 1838
NELAP No.: 02107CA
CSDLAC No.: 10196
ORELAP No.: CA300003

Chris Giuntoli
Geocon Consultants, Inc.
4010 Technology Way, Suite D
Carson City, NV 89706
Tel: (775) 888-9900
Fax:(775) 888-9904

Re: ATL Work Order Number : 1201089
Client Reference : I-80 BRIDGES, S9300-06-186

Enclosed are the results for sample(s) received on March 27, 2012 by Advanced Technology Laboratories. The sample(s) are tested for the parameters as indicated on the enclosed chain of custody in accordance with applicable laboratory certifications. The laboratory results contained in this report specifically pertains to the sample(s) submitted.

Thank you for the opportunity to serve the needs of your company. If you have any questions, please feel free to contact me or your Project Manager.

Sincerely,

Eddie Rodriguez
Laboratory Director

The cover letter and the case narrative are an integral part of this analytical report and its absence renders the report invalid. The report cannot be reproduced without written permission from the client and Advanced Technology Laboratories.

Geocon Consultants, Inc.		Project Number :	I-80 BRIDGES, S9300-06-186
4010 Technology Way, Suite D		Report To :	Chris Giuntoli
Carson City , NV 89706		Reported :	04/03/2012

SUMMARY OF SAMPLES

Sample ID	Laboratory ID	Matrix	Date Sampled	Date Received
102-P1	1201089-01	Paint Chips	3/23/12 0:00	3/27/12 9:19

Geocon Consultants, Inc.		Project Number :	I-80 BRIDGES, S9300-06-186
4010 Technology Way, Suite D		Report To :	Chris Giuntoli
Carson City , NV 89706		Reported :	04/03/2012

Total Metals by ICP-AES EPA 6010B

Analyte: Lead **Analyst: KK/HF**

Laboratory ID	Client Sample ID	Result	Units	PQL	MDL	Dilution	Batch	Prepared	Date/Time Analyzed	Notes
1201089-01	102-P1	**15**	mg/kg	2.0	NA	1	B2C0768	03/28/2012	03/28/12 15:51	

Geocon Consultants, Inc.	Project Number : I-80 BRIDGES, S9300-06-186
4010 Technology Way, Suite D	Report To : Chris Giuntoli
Carson City , NV 89706	Reported : 04/03/2012

QUALITY CONTROL SECTION

Total Metals by ICP-AES EPA 6010B - Quality Control

Analyte	Result (mg/kg)	PQL (mg/kg)	Spike Level	Source Result	% Rec	% Rec Limits	RPD	RPD Limit	Notes
Batch B2C0768 - EPA 3050B									
Blank (B2C0768-BLK1)					Prepared: 3/28/2012 Analyzed: 3/28/2012				
Lead	ND	1.0			NR				
LCS (B2C0768-BS1)					Prepared: 3/28/2012 Analyzed: 3/28/2012				
Lead	47	1.0	50.0		93.5	80 - 120			
Duplicate (B2C0768-DUP1)		**Source: 1201089-01**			Prepared: 3/28/2012 Analyzed: 3/28/2012				
Lead	14	2.0		15	NR		7.28	20	
Matrix Spike (B2C0768-MS1)		**Source: 1201119-07**			Prepared: 3/28/2012 Analyzed: 3/28/2012				
Lead	110	1.0	125	10	83.2	46 - 116			
Matrix Spike Dup (B2C0768-MSD1)		**Source: 1201119-07**			Prepared: 3/28/2012 Analyzed: 3/28/2012				
Lead	110	1.0	125	10	79.9	46 - 116	3.71	20	

Geocon Consultants, Inc.		Project Number :	I-80 BRIDGES, S9300-06-186
4010 Technology Way, Suite D		Report To :	Chris Giuntoli
Carson City , NV 89706		Reported :	04/03/2012

Notes and Definitions

ND	Analyte not detected at or above reporting limit
PQL	Practical Quantitation Limit
MDL	Method Detection Limit
NR	Not Reported
RPD	Relative Percent Difference

CHAIN OF CUSTODY RECORD

Advanced Technology Laboratories
3275 Walnut Avenue
Signal Hill, CA 90755
(562) 989-4045 • Fax (562) 989-4040

FOR LABORATORY USE ONLY:

P.O.#:

Logged By: ✓ Date: 3/27/12

Method of Transport: Client ☐ ATL ☐ CA OverN ☐ FEDEX ☐ Other: GSO

Sample Condition Upon Receipt:
1. CHILLED Y☐ N☑
2. HEADSPACE (VOA) Y☐ N☐
3. CONTAINER INTACT Y☐ N☐
4. SEALED Y☐ N☐
5. # OF SPLS MATCH COC Y☐ N☐
6. PRESERVED Y☐ N☐

Client: GECCON
Attn: CHRIS GIUNTOLI
Address: 4010 TECHNOLOGY WAY, SUITE D
City CARSON CITY State NV Zip Code 89706
TEL: (775) 888-9800
FAX: ( )

Project Name: I-80 BRIDGES
Project #: 59300-06-186
Sampler: (Printed Name) CHRIS GIUNTOLI (Signature)

Relinquished by: (Signature and Printed Name) Date: 3/26/12 Time: 1200 Received by: (Signature and Printed Name) Date: 3/27/12 Time: 9:19
Relinquished by: (Signature and Printed Name) Date: Time: Received by: (Signature and Printed Name) Date: Time:
Relinquished by: (Signature and Printed Name) Date: Time: Received by: (Signature and Printed Name) Date: Time:

I hereby authorize ATL to perform the work indicated below:
Project Mgr /Submitter: CHRIS GIUNTOLI 3/23/12
Print Name Date
Signature

Send Report To:
Attn: SAME
Co:
Address
City State Zip

Bill To:
Attn: SAME
Co:
Address
City State Zip

Special Instructions/Comments:
*SOLUBLE LEAD MAY BE REQUESTED BASED ON TOTAL LEAD RESULTS

Sample/Records - Archival & Disposal
Unless otherwise requested by client, all samples will be disposed 45 days after receipt and records will be disposed 1 year after submittal of final report.

Storage Fees (applies when storage is requested):
- Sample : $2.00 / sample / mo (after 45 days)
- Records : $1.00 / ATL workorder / mo (after 1 year)

Circle or Add Analysis(es) Requested: 8081A (Pesticides), 8082 (PCB), 8260B (Volatiles), 8270C (BNA), 6010B (Total Metal), 8015B (GRO) / BTEX, 8015B (DRO), TOTAL LEAD *

SPECIFY APPROPRIATE MATRIX: SOIL, WATER, GROUND WATER, WASTEWATER, PAINT CHIPS

Q A / Q C: RTNE ☐ CT ☐ SWRCB ☐ Logcode ____ OTHER ____

ITEM	LAB USE ONLY: Batch #: / Lab No.	Sample Description: Sample I.D. / Location	Date	Time	8081A	8082	8260B	8270C	6010B	8015B (GRO) / BTEX	8015B (DRO)	TOTAL LEAD *	SOIL	WATER	GROUND WATER	WASTEWATER	PAINT CHIPS	TAT	Container(s) #	Type	PRESERVATION	REMARKS
	1201089-01	102-P1	3/23/12									X					X	5-DAY	1	P B		

• TAT starts 8 a.m. following day if samples received after 3 p.m.

TAT: A= Overnight ≤ 24 hr B= Emergency Next workday C= Critical 2 Workdays D= Urgent 3 Workdays E= Routine 7 Workdays

Container Types: T=Tube V=VOA L=Liter P=Pint J=Jar B=Tedlar G=Glass P=Plastic M=Metal

Preservatives: H=Hcl N=HNO_3 S=H_2SO_4 C=4°C Z=$Zn(AC)_2$ O=NaOH T=$Na_2S_2O_3$

Project No. S9300-06-186
April 30, 2012

Alicia Beyer, Task Order Manager
Caltrans District 3
Environmental Engineering Office
703 B Street
Marysville, California 95901

Subject: ASBESTOS AND LEAD-CONTAINING PAINT SURVEY REPORT
WEIMAR CROSS ROAD OC (BR. NO. 19-0083)
03-PLA-80, POST MILE 29.32
PLACER COUNTY, CA
CONTRACT NO. 03A1368, E-FIS 0300000473.1 (EA 03-3E1001)
TASK ORDER NO. 186

Dear Ms. Beyer:

In accordance with California Department of Transportation Contract No. 03A1368 and Task Order No. 186 (TO-186), we have performed an asbestos and lead-containing paint (LCP) survey of the subject bridge in Placer County, California. The scope of services included surveying the bridge for suspect asbestos-containing materials (ACM) and lead-containing paint, collecting bulk samples, and submitting the samples to a laboratory for analyses.

PROJECT DESCRIPTION

The project consists of upgrading the Weimar Cross Road Overcrossing (OC), Br. No. 19-0083, at Post Mile (PM) 29.32 on Highway 80 in Placer County, California. The project location is depicted on the Vicinity Map, Figure 1, and Site Plan, Figure 2.

GENERAL OBJECTIVES

The scope of services outlined in TO-186 included the determination of the presence and quantity of asbestos and LCP at the project location prior to various improvements. Assuming that no asbestos is added during future operations, our survey would satisfy National Emissions Standards for Hazardous Air Pollutants (NESHAP) requirements. The information obtained from this investigation will be used by Caltrans for waste profiling, determining California Occupational Safety and Health Administration (Cal/OSHA) applicability, and coordinating asbestos and LCP disturbance activities.

BACKGROUND

Asbestos

The Code of Federal Regulations (CFR), 40 CFR 61, Subpart M, NESHAP and Federal Occupational Safety and Health Administration (FED OSHA) classify ACM as any material or product that contains *greater than* 1% asbestos. Nonfriable ACM is classified by NESHAP as either Category I or Category II material defined as follows:

- **Category I –** asbestos-containing packings, gaskets, resilient floor coverings, and asphalt roofing products.
- **Category II** – all remaining types of nonfriable asbestos-containing material not included in Category I that when dry, cannot be crumbled, pulverized, or reduced to powder by hand pressure.

Regulated asbestos-containing material (RACM), a hazardous waste when friable, is classified as any manufactured material that contains *greater than* 1% asbestos by dry weight *and* is:

- Friable (can be crumbled, pulverized, or reduced to powder by hand pressure); or
- Category I material that has become friable; or
- Category I material that has been subjected to sanding, grinding, cutting, or abrading; or
- Category II nonfriable material that has a high probability of becoming crumbled, pulverized, or reduced to a powder during demolition or renovation activities.

Activities that disturb materials containing *any* amount of asbestos are subject to certain requirements of the Cal/OSHA asbestos standard contained in Title 8, CCR Section 1529. Typically, removal or disturbance of more than 100 square feet of material containing more than 0.1% asbestos must be performed by a registered asbestos abatement contractor, but associated waste labeling is not required if the material contains 1% or less asbestos. When the asbestos content of a material exceeds 1%, virtually all requirements of the standard become effective.

Materials containing more than 1% asbestos are also subject to NESHAP regulations (40 CFR Part 61, Subpart M). RACM (friable ACM and nonfriable ACM that will become friable during demolition operations) must be removed from structures prior to demolition. Certain nonfriable ACM and materials containing 1% or less asbestos may remain in structures during demolition; however, there are waste handling/disposal issues and Cal/OSHA work requirements that must be addressed. Contractors are responsible for segregating and characterizing waste streams prior to disposal.

With respect to potential worker exposure, notification, and registration requirements, Cal/OSHA defines asbestos-containing construction material (ACCM) as construction material that contains more than 0.1% asbestos (Title 8, CCR 341.6).

Lead Paint

Construction activities (including demolition) that disturb materials or paints containing *any* amount of lead are subject to certain requirements of the Cal/OSHA lead standard contained in Title 8, CCR, Section 1532.1. Deteriorated paint is defined by Title 17, CCR, Division 1, Chapter 8, §35022 as a surface coating that is cracking, chalking, flaking, chipping, peeling, non-intact, failed, or otherwise separating from a substrate. Demolition of a deteriorated LCP component would require waste characterization and appropriate disposal. Intact LCP on a component is currently accepted by most landfills and recycling facilities; however, contractors are responsible for segregating and characterizing waste streams prior to disposal.

For a solid waste containing lead, the waste is classified as California hazardous when: 1) the representative total lead content equals or exceeds the respective Total Threshold Limit Concentration (TTLC) of 1,000 milligrams per kilogram (mg/kg); or 2) the representative soluble lead content equals or exceeds the respective Soluble Threshold Limit Concentration (STLC) of 5 milligrams per liter (mg/l) based on the standard Waste Extraction Test (WET). A waste has the potential for exceeding the lead STLC when the waste's representative total lead content is greater than or equal to ten times the respective STLC value since the WET uses a 1:10 dilution ratio. Hence, when total lead is detected at a concentration greater than or equal to 50 mg/kg, and assuming that 100 percent of the total lead is soluble, soluble lead analysis is required. Lead-containing waste is classified as "Resource, Conservation, and Recovery Act" (RCRA) hazardous, or Federal hazardous, when the soluble lead content equals or exceeds the Federal regulatory level of 5 mg/l based on the Toxicity Characteristic Leaching Procedure (TCLP).

The above regulatory criteria are based on chemical concentrations. Wastes may also be classified as hazardous based on other criteria such as ignitability; however, for the purposes of this investigation, toxicity (i.e., lead concentration) is the primary factor considered for waste classification since waste generated during the construction activities would not likely warrant testing for ignitability or other criteria. Waste that is classified as either California-hazardous or RCRA-hazardous requires management as a hazardous waste.

Potential hazards exist to workers who remove or cut through LCP coatings during demolition. Dust containing hazardous concentrations of lead may be generated during scraping or cutting materials coated with lead-containing paint. Torching of these materials may produce lead oxide fumes. Therefore, air monitoring and/or respiratory protection may be required during the demolition of materials coated with LCP. Guidelines regarding regulatory provisions for construction work where workers may be exposed to lead are presented in Title 8, CCR, Section 1532.1.

Architectural Drawings and Previous Survey Activities

Structure architectural plans and bridge maintenance records were not available for our review. We reviewed our prior survey report titled, *Asbestos-Containing Materials and Lead-Containing Paint Survey, Interstate 80 Post Mile 0.3 to 29.3, Placer County, California*, dated August 19, 2010, (2010 Survey Report), executed under TO-134, for information pertaining to previous survey results for the Weimar Cross Road Overcrossing. Asbestos and LCP samples results presented in our 2010 Survey Report are summarized in the Investigative Results section below.

SCOPE OF SERVICES

Mr. Chris Giuntoli, a California-Certified Asbestos Consultant (CAC), certification No. 02-3163 (expiration June 19, 2012), and Certified Lead Paint Inspector/Assessor and Project Monitor with the California Department of Public Health Services (DPH), certification number I-5522 (expiration June 14, 2012), performed the asbestos and LCP survey at the project location on March 23, 2012.

Asbestos

Based on the asbestos survey results presented in our 2010 Survey Report, additional bulk asbestos samples of suspect materials were not collected from the bridge structure during our current survey.

Lead Paint

One bulk paint sample was collected from suspect LCP observed at the project location. We did not observe deteriorated LCP during our survey. Our sampling procedures in accordance with TO-186 are discussed below:

- Collected bulk a sample of suspect LCP using techniques presented in HUD guidelines. In addition, the painted area was evaluated for evidence of deterioration such as flaking or cracking.
- Relinquished the bulk LCP sample under chain-of-custody protocol to Advanced Technology Laboratories, a California-licensed and Caltrans-approved subcontractor, for lead analysis in accordance with EPA Test Method 6010B. Additionally, the sample was analyzed for WET lead by EPA Test Method 7420 and TCLP lead by EPA Test Method 1311/7420. Advanced Technology Laboratories is accredited by the DPH for lead analysis. The laboratory analyses were requested on a five-day turnaround time.

Based on the LCP results presented in our 2010 Survey Report, additional bulk paint samples of traffic striping were not collected from the bridge structure during our current survey.

The approximate sample location is presented on Figure 2. The materials represented by the sample collected during our current survey and 2010 survey are shown in the attached photographs.

INVESTIGATIVE RESULTS

Asbestos

Asbestos was not detected in samples of expansion joint fill material collected during our 2010 survey of the bridge structure. A reproduction of our 2010 Survey Report is attached.

Lead Paint

A sample representing intact gray graffiti abatement paint on the bridge south abutment exhibited a total lead concentration of 200 mg/kg, a WET lead concentration of 5.7 mg/l, and a TCLP lead concentration of less than the laboratory reporting limit of 0.50 mg/l.

The sample identification number of the bulk paint sample collected during our current LCP survey, and descriptions, peeling and flaking quantities, and a summary of the analytical laboratory test results for paint (including paint samples collected during our 2010 survey [executed under TO-134]) are summarized below. Reproductions of our 2010 Survey Report and the laboratory reports and chain-of-custody documentation are attached.

Total and Soluble Lead					
Sample No.	**Paint Description**	**Approximate Quantity Peeling/Flaking**	**Total Lead (mg/kg)**	**WET Lead (mg/l)**	**TCLP Lead (mg/l)**
83-P1	Gray graffiti abatement paint (south abutment)	Intact	200	5.7	<0.50
NA (2010 Survey Report)	Yellow traffic paint	Intact	7,700	---	1.0
NA (2010 Survey Report)	White traffic paint	Intact	9.1	---	---

WET = Waste Extraction Test (EPA Test Method 7420)
TCLP = Toxicity Characteristic Leaching Procedure (EPA Test Method 1311/7420)
mg/kg = milligrams per kilogram (EPA Test Method 6010B)
mg/l = milligrams per liter
NA = not applicable
< = Not detected at or above the indicated laboratory reporting limit
--- = Not analyzed

RECOMMENDATIONS

Asbestos

Since no asbestos was detected in samples collected during our 2010 survey, the Cal/OSHA asbestos standard does not apply for planned activities. In addition, demolition debris would not be considered a California hazardous waste based on asbestos content. However, written notification to U.S. EPA Region IX and the California Air Resources Board is required ten working days prior to commencement of *any* demolition activity (whether asbestos is present or not).

Lead Paint

Gray graffiti abatement paint sampled during our current survey and yellow traffic striping sampled during our 2010 survey would be classified as California hazardous waste based on lead content if stripped, blasted, or otherwise separated from the substrate.

White traffic striping sampled during our 2010 survey would not be classified as a California hazardous waste or Federal (RCRA) waste based on lead content if stripped, blasted, or otherwise separated from the substrate.

We recommend that all paints at the project location (graffiti, graffiti abatement, signage, etc.) be treated as lead-containing for purposes of determining the applicability of the Cal/OSHA lead standard during any future maintenance, renovation, and demolition activities. This recommendation is based on LCP sample results and the fact that lead was a common ingredient of paints manufactured before 1978 and is still an ingredient of some paints. In accordance with Title 8, CCR, Section 1532.1(p), written notification to the nearest Cal/OSHA district office is required at least 24 hours prior to certain lead-related work. Compliance and training requirements regarding construction activities where workers may be exposed to lead are presented in Title 8, CCR, Section 1532.1, subsections (e) and (l), respectively. Contractors are responsible for segregating and characterizing waste streams prior to disposal.

REPORT LIMITATIONS

The asbestos and LCP survey was conducted in conformance with generally accepted standards of practice for identifying and evaluating asbestos and LCP in structures. The survey addressed only the structure identified above. Due to the nature of structure surveys, asbestos and LCP use, and laboratory analytical limitations, some ACM or LCP at the project location may not have been identified. Spaces such as cavities, voids, crawlspaces, and pipe chases may have been concealed to our investigator. Previous renovation work may have concealed or covered spaces or materials or may have partially demolished materials and left debris in inaccessible areas. Additionally, renovation activities may have partially replaced ACM with indistinguishable non-ACM. Asbestos and/or LCP may exist in areas of the structure that were not accessible or sampled in conjunction with this TO.

During renovation or demolition operations, suspect materials may be uncovered which are different from those accessible for sampling during this assessment. Personnel in charge of renovation/demolition should be alerted to note materials uncovered during such activities that differ substantially from those included in this or previous assessment reports. If suspect ACM and/or LCP are found, additional sampling and analysis should be performed to determine if the materials contain asbestos or lead.

This report has been prepared exclusively for Caltrans. The information contained herein is only valid as of the date of the report and will require an update to reflect additional information obtained.

This report is not a comprehensive site characterization and should not be construed as such. The findings as presented in this report are predicated on the results of the limited sampling and laboratory testing performed. In addition, the information obtained is not intended to address potential impacts related to sources other than those specified herein. Therefore, the report should be deemed conclusive with respect to only the information obtained. We make no warranty, express or implied, with respect to the content of this report or any subsequent reports, correspondence or consultation. Geocon strived to perform the services summarized herein in accordance with the local standard of care in the geographic region at the time the services were rendered.

The contents of this report reflect the views of the author who is responsible for the facts and accuracy of the data presented herein. The contents do not necessarily reflect the official views or policies of the State of California or the Federal Highway Administration. This report does not constitute a standard, specification, or regulation.

Please contact us should you have any questions concerning the contents of this report or if we may be of further service.

Sincerely,

GEOCON CONSULTANTS INC.

Chris Giuntoli, CAC
Senior Project Scientist

John E. Juhrend, PE, CEG
Project Manager

(2 + 2 CD) Addressee

Attachments:
Figure 1, Vicinity Map
Figure 2, Site Plan
Site Photographs (1 through 7)
Analytical Laboratory Reports and Chain-of-custody Documentation
Geocon 2010 Survey Report

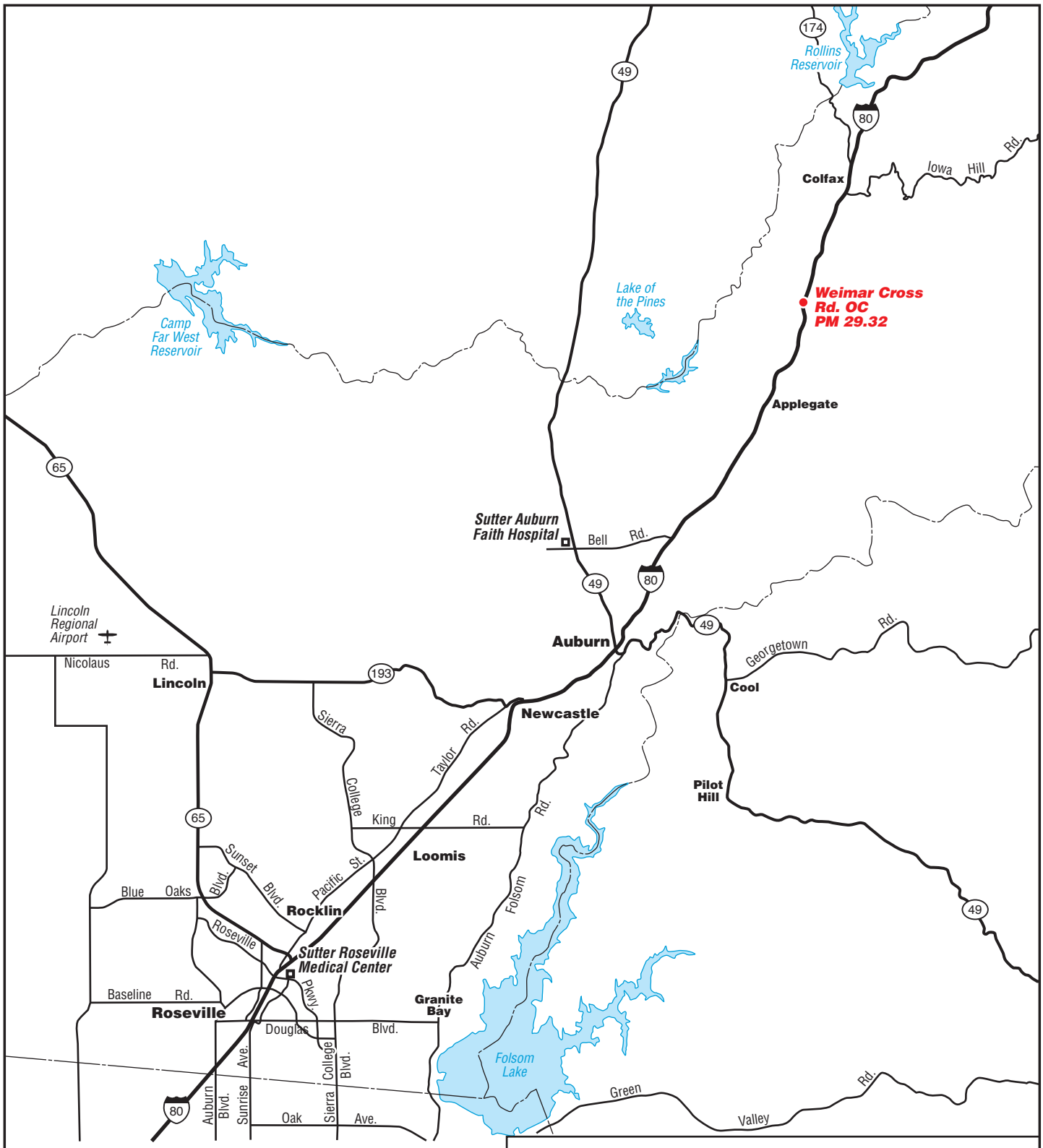

N

0 5

Scale in Miles

GEOCON CONSULTANTS, INC.

3160 GOLD VALLEY DR – SUITE 800 – RANCHO CORDOVA, CA 95742
PHONE 916.852.9118 – FAX 916.852.9132

Weimar Cross Road OC (Br. No. 19-0083)
03-PLA-80, Post Mile 29.32

Placer County, CA	**VICINITY MAP**	
GEOCON Proj. No. S9300-06-186		
TO# 186, EA 03-3E1001	April 2012	Figure 1

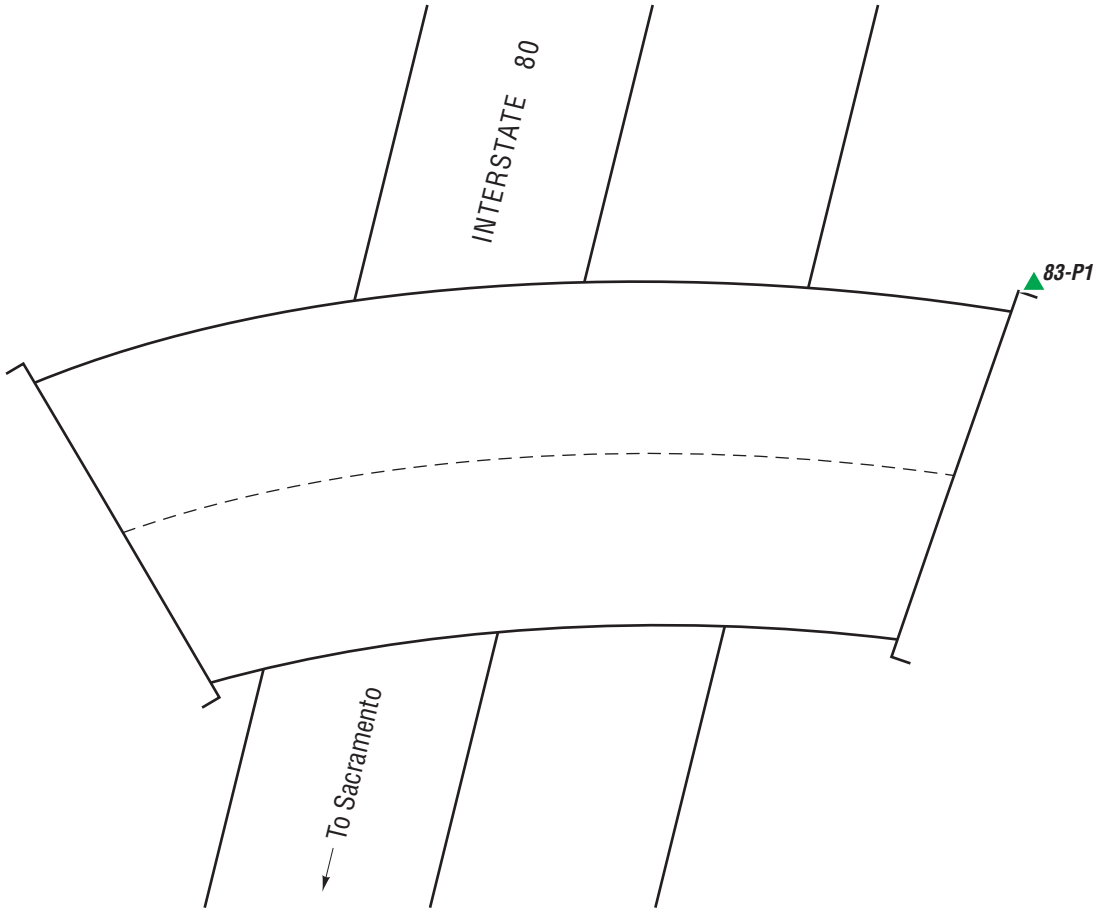

WEIMAR CROSS ROAD OC
(BR. NO. 19-0083)

N

NOT TO SCALE

LEGEND:

▲ Approximate Paint Sample Location

GEOCON
CONSULTANTS, INC.
3160 GOLD VALLEY DR – SUITE 800 – RANCHO CORDOVA, CA 95742
PHONE 916.852.9118 – FAX 916.852.9132

Weimar Cross Road OC (Br. No. 19-0083) 03-PLA-80, Post Mile 29.32		
Placer County, CA	**SITE PLAN**	
GEOCON Proj. No. S9300-06-186		
TO# 186, EA 03-3E1001	April 2012	Figure 2

Photo 1 – Weimar Cross Road OC (Br. No. 19-0083) in Placer County, CA

Photo 2 – Br. No. 19-0083 deck and barrier rails

Photo 3 – Br. No. 19-0083 expansion joint fill material

GEOCON
CONSULTANTS, INC.
3160 GOLD VALLEY DR – SUITE 800 – RANCHO CORDOVA, CA 95742
PHONE 916.852.9118 – FAX 916.852.9132

PHOTOGRAPHS 1, 2, AND 3		
Weimar Cross Road OC (Br, No. 19-0083) 03-PLA-80 PM 29.32		
S9300-06-186	TO #186	April 2012

Photo 4 – Br. No. 19-0083 yellow and white traffic striping

Photo 5 – Br. No. 19-0083 gray graffiti abatement paint

GEOCON
CONSULTANTS, INC.
3160 GOLD VALLEY DR – SUITE 800 – RANCHO CORDOVA, CA 95742
PHONE 916.852.9118 – FAX 916.852.9132

PHOTOGRAPHS 4 AND 5		
Weimar Cross Road OC (Br. No. 19-0083) 03-PLA-80 PM 29.32		
S9300-06-186	TO #186	April 2012

Photo 6 – Br. No. 19-0083 typical elastomeric deck joint seal (non-suspect)

Photo 7 – Br. No. 19-0083 steel abutment drain pipe (non-suspect)

ADVANCED TECHNOLOGY LABORATORIES

April 03, 2012

ELAP No.: 1838
NELAP No.: 02107CA
CSDLAC No.: 10196
ORELAP No.: CA300003

Chris Giuntoli
Geocon Consultants, Inc.
4010 Technology Way, Suite D
Carson City, NV 89706
Tel: (775) 888-9900
Fax:(775) 888-9904

Re: ATL Work Order Number : 1201088
Client Reference : I-80 BRIDGES, S9300-06-186

Enclosed are the results for sample(s) received on March 27, 2012 by Advanced Technology Laboratories. The sample(s) are tested for the parameters as indicated on the enclosed chain of custody in accordance with applicable laboratory certifications. The laboratory results contained in this report specifically pertains to the sample(s) submitted.

Thank you for the opportunity to serve the needs of your company. If you have any questions, please feel free to contact me or your Project Manager.

Sincerely,

Eddie Rodriguez
Laboratory Director

The cover letter and the case narrative are an integral part of this analytical report and its absence renders the report invalid. The report cannot be reproduced without written permission from the client and Advanced Technology Laboratories.

Geocon Consultants, Inc.		Project Number :	I-80 BRIDGES, S9300-06-186
4010 Technology Way, Suite D		Report To :	Chris Giuntoli
Carson City , NV 89706		Reported :	04/03/2012

SUMMARY OF SAMPLES

Sample ID	Laboratory ID	Matrix	Date Sampled	Date Received
83-P1	1201088-01	Paint Chips	3/23/12 0:00	3/27/12 9:19

Geocon Consultants, Inc.		Project Number :	I-80 BRIDGES, S9300-06-186
4010 Technology Way, Suite D		Report To :	Chris Giuntoli
Carson City , NV 89706		Reported :	04/03/2012

Total Metals by ICP-AES EPA 6010B

Analyte: Lead **Analyst: KK/HF**

Laboratory ID	Client Sample ID	Result	Units	PQL	MDL	Dilution	Batch	Prepared	Date/Time Analyzed	Notes
1201088-01	83-P1	**200**	mg/kg	4.0	NA	1	B2C0768	03/28/2012	03/28/12 15:49	

Geocon Consultants, Inc.	Project Number : I-80 BRIDGES, S9300-06-186
4010 Technology Way, Suite D	Report To : Chris Giuntoli
Carson City , NV 89706	Reported : 04/03/2012

QUALITY CONTROL SECTION

Total Metals by ICP-AES EPA 6010B - Quality Control

Analyte	Result (mg/kg)	PQL (mg/kg)	Spike Level	Source Result	% Rec	% Rec Limits	RPD	RPD Limit	Notes
Batch B2C0768 - EPA 3050B									
Blank (B2C0768-BLK1)					Prepared: 3/28/2012 Analyzed: 3/28/2012				
Lead	ND	1.0			NR				
LCS (B2C0768-BS1)					Prepared: 3/28/2012 Analyzed: 3/28/2012				
Lead	47	1.0	50.0		93.5	80 - 120			
Duplicate (B2C0768-DUP1)		**Source: 1201089-01**			Prepared: 3/28/2012 Analyzed: 3/28/2012				
Lead	14	2.0		15	NR		7.28	20	
Matrix Spike (B2C0768-MS1)		**Source: 1201119-07**			Prepared: 3/28/2012 Analyzed: 3/28/2012				
Lead	110	1.0	125	10	83.2	46 - 116			
Matrix Spike Dup (B2C0768-MSD1)		**Source: 1201119-07**			Prepared: 3/28/2012 Analyzed: 3/28/2012				
Lead	110	1.0	125	10	79.9	46 - 116	3.71	20	

Geocon Consultants, Inc.		Project Number :	I-80 BRIDGES, S9300-06-186
4010 Technology Way, Suite D		Report To :	Chris Giuntoli
Carson City , NV 89706		Reported :	04/03/2012

Notes and Definitions

ND	Analyte not detected at or above reporting limit
PQL	Practical Quantitation Limit
MDL	Method Detection Limit
NR	Not Reported
RPD	Relative Percent Difference

CHAIN OF CUSTODY RECORD

Advanced Technology Laboratories
3275 Walnut Avenue
Signal Hill, CA 90755
(562) 989-4045 • Fax (562) 989-4040

FOR LABORATORY USE ONLY:

P.O.#:

Logged By: Date: 3/27/12

Method of Transport: Client ☐ ATL ☐ CA OverN ☐ FEDEX ☐ Other: GSO

Sample Condition Upon Receipt:
1. CHILLED Y☐ N☑
2. HEADSPACE (VOA) Y☐ N☐
3. CONTAINER INTACT Y☐ N☐
4. SEALED Y☐ N☐
5. # OF SPLS MATCH COC Y☐ N☐
6. PRESERVED Y☐ N☐

Client: GECCON
Attn: CHRIS GIUNTOLI
Address: 4010 TECHNOLOGY WAY, SUITE D
City CARSON CITY State NV Zip Code 89706
TEL: (775) 888-9800
FAX: ( )

Project Name: I-80 BRIDGES Project #: 59300-06-186 Sampler: (Printed Name) CHRIS GIUNTOLI (Signature)

Relinquished by: (Signature and Printed Name) Date: 3/24/12 Time: 1200 Received by: (Signature and Printed Name) Date: 3/27/12 Time: 9:15

Relinquished by: (Signature and Printed Name) Date: Time: Received by: (Signature and Printed Name) Date: Time:

Relinquished by: (Signature and Printed Name) Date: Time: Received by: (Signature and Printed Name) Date: Time:

I hereby authorize ATL to perform the work indicated below:
Project Mgr /Submitter:
CHRIS GIUNTOLI 3/23/12
Print Name Date
Signature

Send Report To:
Attn: SAME
Co:
Address
City State Zip

Bill To:
Attn: SAME
Co:
Address
City State Zip

Special Instructions/Comments:
*SOLUBLE LEAD MAY BE REQUESTED BASED ON TOTAL LEAD RESULTS

Sample/Records - Archival & Disposal
Unless otherwise requested by client, all samples will be disposed 45 days after receipt and records will be disposed 1 year after submittal of final report.

Storage Fees (applies when storage is requested):
- Sample : $2.00 / sample / mo (after 45 days)
- Records : $1.00 / ATL workorder / mo (after 1 year)

Circle or Add Analysis(es) Requested

SPECIFY APPROPRIATE MATRIX

QA/QC: RTNE ☐ CT ☐ SWRCB ☐ Logcode ____ OTHER ____

ITEM	LAB USE ONLY: Batch #: Lab No.	Sample Description: Sample I.D. / Location	Date	Time	8081A (Pesticides)	8082 (PCB)	8260B (Volatiles)	8270C (BNA)	6010B (Total Metal)	8015B (GRO) / BTEX	8015B (DRO)	TOTAL LEAD*	SOIL	WATER	GROUND WATER	WASTEWATER	PAINT CHIPS	TAT	Container(s) #	Type	PRESERVATION	REMARKS
	1201088-07	83-P1	3/23/12									X					X	5-DAY	1	P B		

• TAT starts 8 a.m. following day if samples received after 3 p.m.

TAT: A= Overnight ≤ 24 hr B= Emergency Next workday C= Critical 2 Workdays D= Urgent 3 Workdays E= Routine 7 Workdays

Container Types: T=Tube V=VOA L=Liter P=Pint J=Jar B=Tedlar G=Glass P=Plastic M=Metal

Preservatives: H=HCl N=HNO_3 S=H_2SO_4 C=4°C Z=$Zn(AC)_2$ O=NaOH T=$Na_2S_2O_3$

ADVANCED TECHNOLOGY LABORATORIES

April 11, 2012

ELAP No.: 1838
NELAP No.: 02107CA
CSDLAC No.: 10196
ORELAP No.: CA300003

Chris Giuntoli
Geocon Consultants, Inc.
4010 Technology Way, Suite D
Carson City, NV 89706
Tel: (775) 888-9900
Fax:(775) 888-9904

Re: ATL Work Order Number : 1201088
Client Reference : I-80 BRIDGES, S9300-06-186

Enclosed are the results for sample(s) received on March 27, 2012 by Advanced Technology Laboratories. The sample(s) are tested for the parameters as indicated on the enclosed chain of custody in accordance with applicable laboratory certifications. The laboratory results contained in this report specifically pertains to the sample(s) submitted.

Thank you for the opportunity to serve the needs of your company. If you have any questions, please feel free to contact me or your Project Manager.

Sincerely,

Eddie Rodriguez
Laboratory Director

The cover letter and the case narrative are an integral part of this analytical report and its absence renders the report invalid. The report cannot be reproduced without written permission from the client and Advanced Technology Laboratories.

Geocon Consultants, Inc.		Project Number :	I-80 BRIDGES, S9300-06-186
4010 Technology Way, Suite D		Report To :	Chris Giuntoli
Carson City , NV 89706		Reported :	04/11/2012

SUMMARY OF SAMPLES

Sample ID	Laboratory ID	Matrix	Date Sampled	Date Received
83-P1	1201088-01	Paint Chips	3/23/12 0:00	3/27/12 9:19

Geocon Consultants, Inc.		Project Number :	I-80 BRIDGES, S9300-06-186
4010 Technology Way, Suite D		Report To :	Chris Giuntoli
Carson City , NV 89706		Reported :	04/11/2012

STLC Lead by AA (Direct Aspiration) by EPA 7420

Analyte: Lead **Analyst: VV**

Laboratory ID	Client Sample ID	Result	Units	PQL	MDL	Dilution	Batch	Prepared	Date/Time Analyzed	Notes
1201088-01	83-P1	**5.7**	mg/L	0.50	NA	1	B2D0281	04/09/2012	04/09/12 13:26	

Geocon Consultants, Inc.	Project Number : I-80 BRIDGES, S9300-06-186
4010 Technology Way, Suite D	Report To : Chris Giuntoli
Carson City , NV 89706	Reported : 04/11/2012

QUALITY CONTROL SECTION

STLC Lead by AA (Direct Aspiration) by EPA 7420 - Quality Control

Analyte	Result (mg/L)	PQL (mg/L)	Spike Level	Source Result	% Rec	% Rec Limits	RPD	RPD Limit	Notes
Batch B2D0281 - STLC Extraction									
Blank (B2D0281-BLK1)					Prepared: 4/9/2012 Analyzed: 4/9/2012				
Lead	ND	0.50			NR				
Blank (B2D0281-BLK2)					Prepared: 4/9/2012 Analyzed: 4/9/2012				
Lead	ND	0.50			NR				
LCS (B2D0281-BS1)					Prepared: 4/9/2012 Analyzed: 4/9/2012				
Lead	5.1	0.05	5.00		102	80 - 120			
Duplicate (B2D0281-DUP1)		**Source: 1201117-37**			Prepared: 4/9/2012 Analyzed: 4/9/2012				
Lead	76	5.0		76	NR		0.133	20	
Duplicate (B2D0281-DUP2)		**Source: 1201117-91**			Prepared: 4/9/2012 Analyzed: 4/9/2012				
Lead	23	2.5		23	NR		0.103	20	
Matrix Spike (B2D0281-MS1)		**Source: 1201117-37**			Prepared: 4/9/2012 Analyzed: 4/9/2012				
Lead	79	0.50	5.00	76	67.3	80 - 120			M1
Matrix Spike (B2D0281-MS2)		**Source: 1201117-91**			Prepared: 4/9/2012 Analyzed: 4/9/2012				
Lead	28	0.25	5.00	23	94.4	80 - 120			
Matrix Spike Dup (B2D0281-MSD1)		**Source: 1201117-37**			Prepared: 4/9/2012 Analyzed: 4/9/2012				
Lead	80	0.50	5.00	76	81.0	80 - 120	0.862	20	
Batch S2D0118 - B2D0282									
Instrument Blank (S2D0118-IBL1)					Prepared: 4/9/2012 Analyzed: 4/9/2012				
Lead	ND	0.50			NR				

Geocon Consultants, Inc.		Project Number :	I-80 BRIDGES, S9300-06-186
4010 Technology Way, Suite D		Report To :	Chris Giuntoli
Carson City , NV 89706		Reported :	04/11/2012

Notes and Definitions

M1	Matrix spike recovery outside of acceptance limit. The analytical batch was validated by the laboratory control sample.
ND	Analyte not detected at or above reporting limit
PQL	Practical Quantitation Limit
MDL	Method Detection Limit
NR	Not Reported
RPD	Relative Percent Difference

Diane Galvan

From: Chris Giuntoli [giuntoli@geoconinc.com]
Sent: Wednesday, April 04, 2012 2:42 PM
To: Diane Galvan
Subject: RE: Results/EDD/Invoice - I-80 BRIDGES (1201088)

Hi Diane,

For Work Order 1201088, please run WET lead for sample 83-P1 on a 5-day TAT.

Thanks,
Chris

ADVANCED TECHNOLOGY LABORATORIES

April 23, 2012

ELAP No.: 1838
NELAP No.: 02107CA
CSDLAC No.: 10196
ORELAP No.: CA300003

Chris Giuntoli
Geocon Consultants, Inc.
4010 Technology Way, Suite D
Carson City, NV 89706
Tel: (775) 888-9900
Fax:(775) 888-9904

Re: ATL Work Order Number : 1201088
Client Reference : I-80 BRIDGES, S9300-06-186

Enclosed are the results for sample(s) received on March 27, 2012 by Advanced Technology Laboratories. The sample(s) are tested for the parameters as indicated on the enclosed chain of custody in accordance with applicable laboratory certifications. The laboratory results contained in this report specifically pertains to the sample(s) submitted.

Thank you for the opportunity to serve the needs of your company. If you have any questions, please feel free to contact me or your Project Manager.

Sincerely,

Eddie Rodriguez
Laboratory Director

The cover letter and the case narrative are an integral part of this analytical report and its absence renders the report invalid. The report cannot be reproduced without written permission from the client and Advanced Technology Laboratories.

Geocon Consultants, Inc.		Project Number :	I-80 BRIDGES, S9300-06-186
4010 Technology Way, Suite D		Report To :	Chris Giuntoli
Carson City , NV 89706		Reported :	04/23/2012

SUMMARY OF SAMPLES

Sample ID	Laboratory ID	Matrix	Date Sampled	Date Received
83-P1	1201088-01	Paint Chips	3/23/12 0:00	3/27/12 9:19

Geocon Consultants, Inc.		Project Number :	I-80 BRIDGES, S9300-06-186
4010 Technology Way, Suite D		Report To :	Chris Giuntoli
Carson City , NV 89706		Reported :	04/23/2012

Client Sample ID 83-P1

Lab ID: 1201088-01

TCLP Lead by AA (Direct Aspiration) EPA 7420 **Analyst: SB**

Analyte	Result (mg/L)	PQL (mg/L)	MDL (mg/L)	Dilution	Batch	Prepared	Date/Time Analyzed	Notes
Lead	ND	0.50	NA	1	B2D0697	04/19/2012	04/20/12 18:06	

QUALITY CONTROL SECTION

TCLP Lead by AA (Direct Aspiration) EPA 7420 - Quality Control

Analyte	Result (mg/L)	PQL (mg/L)	Spike Level	Source Result	% Rec	% Rec Limits	RPD	RPD Limit	Notes
Batch B2D0697 - EPA 3010A									
Blank (B2D0697-BLK1)				Prepared: 4/19/2012 Analyzed: 4/20/2012					
Lead	ND	0.50			NR				
Blank (B2D0697-BLK2)				Prepared: 4/19/2012 Analyzed: 4/20/2012					
Lead	ND	0.50			NR				
LCS (B2D0697-BS1)				Prepared: 4/19/2012 Analyzed: 4/20/2012					
Lead	0.99	0.50	1.00		99.2	80 - 120			
Duplicate (B2D0697-DUP1)		**Source: 1201045-40**		Prepared: 4/19/2012 Analyzed: 4/20/2012					
Lead	0.95	0.50		1.0	NR		6.98	20	
Matrix Spike (B2D0697-MS1)		**Source: 1201045-40**		Prepared: 4/19/2012 Analyzed: 4/20/2012					
Lead	2.8	0.50	2.50	1.0	72.8	80 - 120			M1
Matrix Spike (B2D0697-MS2)		**Source: 1201045-40**		Prepared: 4/19/2012 Analyzed: 4/20/2012					
Lead	5.8	0.50	5.00	1.0	96.3	80 - 120			
Matrix Spike Dup (B2D0697-MSD1)		**Source: 1201045-40**		Prepared: 4/19/2012 Analyzed: 4/20/2012					
Lead	3.0	0.50	2.50	1.0	80.3	80 - 120	6.33	20	

Geocon Consultants, Inc.		Project Number :	I-80 BRIDGES, S9300-06-186
4010 Technology Way, Suite D		Report To :	Chris Giuntoli
Carson City , NV 89706		Reported :	04/23/2012

Notes and Definitions

M1	Matrix spike recovery outside of acceptance limit. The analytical batch was validated by the laboratory control sample.
ND	Analyte not detected at or above reporting limit
PQL	Practical Quantitation Limit
MDL	Method Detection Limit
NR	Not Reported
RPD	Relative Percent Difference
CA1	CA-NELAP (CDPH)
CA2	CA-ELAP (CDPH)
OR1	OR-NELAP (OSPHL)
TX1	TX-NELAP (TCEQ)

Diane Galvan

From: Chris Giuntoli [giuntoli@geoconinc.com]
Sent: Friday, April 13, 2012 5:08 PM
To: Diane Galvan
Subject: RE: Additional Results/EDD/Invoice - I-80 BRIDGES (1201088)

Hi Diane,

For workorder 1201088, please run TCLP for lead on sample 83-P1 on a 5-day TAT.

Thanks,
Chris

PREPARED FOR:

CALIFORNIA DEPARTMENT OF TRANSPORTATION – DISTRICT 3
ENVIRONMENTAL ENGINEERING OFFICE
703 B STREET, P.0. BOX 911
MARYSVILLE, CALIFORNIA 95901

PREPARED BY:

GEOCON CONSULTANTS, INC.
3160 GOLD VALLEY DRIVE, SUITE 800
RANCHO CORDOVA, CALIFORNIA 95742

GEOCON PROJECT NO. S9300-06-134
TASK ORDER NO. 134, EA 03-3E0901

AUGUST 2010

GEOCON
CONSULTANTS, INC.
GEOTECHNICAL ■ ENVIRONMENTAL ■ MATERIALS

Project No. S9300-06-134
August 19, 2010

Mark Melani, Task Order Manager
Caltrans District 3
703 B Street/P.O. Box 911
Marysville, California 95901

Subject: INTERSTATE 80 POST MILE 0.3 TO 29.3 (BRIDGES)
PLACER COUNTY, CALIFORNIA
CONTRACT NO. 03A1368
TASK ORDER NO. 134, EA NO. 03-3E0901
ASBESTOS-CONTAINING MATERIALS AND LEAD-CONTAINING PAINT SURVEY REPORT

Dear Mr. Melani:

In accordance with California Department of Transportation Contract No. 03A1368 and Task Order No. 134, we have performed an asbestos-containing and lead-containing paint survey of ten bridges along Interstate 80 in Placer County, California. The scope of services included surveying the bridges for suspect asbestos-containing materials and lead-containing paint, collecting bulk samples, and submitting the samples to laboratories for analyses.

The accompanying report summarizes the services performed and laboratory analysis.

The contents of this report reflect the views of Geocon Consultants, Inc., who are responsible for the facts and accuracy of the data presented herein. The contents do not necessarily reflect the official views or policies of the State of California or the Federal Highway Administration. This report does not constitute a standard, specification, or regulation.

Please contact us if you have questions concerning the contents of this report or if we may be of further service.

Sincerely,

GEOCON CONSULTANTS, INC.

David A. Watts, CAC
Senior Project Scientist

John E. Juhrend, PE, CEG
Project Manager

(3 + 3 CDs) Addressee

TABLE OF CONTENTS

ASBESTOS-CONTAINING MATERIALS AND LEAD-CONTAINING PAINT SURVEY REPORT

Page

1.0 INTRODUCTION 1
- 1.1 Project Description 1
- 1.2 General Objectives 1

2.0 BACKGROUND 1
- 2.1 Asbestos 1
- 2.2 Lead Paint 2
- 2.3 Architectural Drawings and Previous Survey Activities 3

3.0 SCOPE OF SERVICES 3
- 3.1 Asbestos 4
- 3.2 Lead Paint 4

4.0 INVESTIGATIVE RESULTS 5
- 4.1 Asbestos Analytical Results 5
- 4.2 Paint Analytical Results 5

5.0 RECOMMENDATIONS 6
- 5.1 Asbestos 6
- 5.2 Lead Paint 6

6.0 REPORT LIMITATIONS 8

FIGURES
1. Vicinity Map
2A-C. Site Plans

PHOTOGRAPHS (1 through 42)

TABLES
1. Summary of Asbestos Analytical Results
2. Summary of Paint Analytical Results – Total and Soluble Lead

APPENDICES
A. Task Order 34 Bridge List
B. Analytical Laboratory Reports and Chain-of-custody Documentation

ASBESTOS-CONTAINING MATERIALS AND LEAD-CONTAINING PAINT SURVEY REPORT

1.0 INTRODUCTION

This Asbestos-containing Materials and Lead-containing Paint (LCP) Survey Report was prepared by Geocon Consultants, Inc. under Caltrans Contract No. 03A1368, Task Order No. 134 (TO-134).

1.1 Project Description

The project consists of ten bridges on Interstate 80 in Placer County, California. We performed asbestos and LCP survey activities at the bridges. The approximate project locations are depicted on the Vicinity Map, Figure 1. The approximate sample locations are depicted on the Site Plans, Figures 2A through 2C. A list of the bridges included in our survey is presented as Appendix A.

1.2 General Objectives

The purpose of the scope of services outlined in TO-134 was to determine the presence and quantity of asbestos and LCP at the project locations prior to bridge improvement activities. The information obtained from this investigation will be used by Caltrans for waste profiling, determining California Occupational Safety and Health Administration (Cal/OSHA) applicability, and coordinating asbestos and LCP disturbance activities.

> *It was <u>not</u> Geocon's intent during this inspection to conduct an evaluation of lead-based paint hazards in accordance with U.S. Department of Housing and Urban Development (HUD) guidelines.*

2.0 BACKGROUND

2.1 Asbestos

The *Code of Federal Regulations (CFR),* 40 CFR 61, Subpart M, National Emissions Standards for Hazardous Air Pollutants (NESHAP) and Federal Occupational Safety and Health Administration (FED OSHA) classify asbestos-containing material (ACM) as any material or product that contains *greater than* 1% asbestos. Nonfriable ACM is classified by NESHAP as either Category I or Category II material defined as follows:

- **Category I** – asbestos-containing packings, gaskets, resilient floor coverings, and asphalt roofing products.
- **Category II** – all remaining types of nonfriable asbestos-containing material not included in Category I that when dry, cannot be crumbled, pulverized, or reduced to powder by hand pressure.

Regulated asbestos-containing material (RACM), a hazardous waste when friable, is classified as any manufactured material that contains *greater than* 1% asbestos by dry weight *and* is:

- Friable (can be crumbled, pulverized, or reduced to powder by hand pressure); or
- Category I material that has become friable; or
- Category I material that has been subjected to sanding, grinding, cutting, or abrading; or
- Category II nonfriable material that has a high probability of becoming crumbled, pulverized, or reduced to a powder during demolition or renovation activities.

Activities that disturb materials containing *any* amount of asbestos are subject to certain requirements of the Cal/OSHA asbestos standard contained in Title 8, CCR Section 1529. Typically, removal or disturbance of more than 100 square feet of material containing more than 0.1% asbestos must be performed by a registered asbestos abatement contractor, but associated waste labeling is not required if the material contains 1% or less asbestos. When the asbestos content of a material exceeds 1%, virtually all requirements of the standard become effective.

Materials containing more than 1% asbestos are also subject to NESHAP regulations (40 CFR Part 61, Subpart M). RACM (friable ACM and nonfriable ACM that will become friable during demolition operations) must be removed from structures prior to demolition. Certain nonfriable ACM and materials containing 1% or less asbestos may remain in structures during demolition; however, there are waste handling/disposal issues and Cal/OSHA work requirements that must be addressed. Contractors are responsible for segregating and characterizing waste streams prior to disposal.

With respect to potential worker exposure, notification, and registration requirements, Cal/OSHA defines asbestos-containing construction material (ACCM) as construction material that contains more than 0.1% asbestos (Title 8, CCR 341.6).

2.2 Lead Paint

Construction activities (including demolition) that disturb materials or paints containing *any* amount of lead are subject to certain requirements of the Cal/OSHA lead standard contained in Title 8, CCR, Section 1532.1. Deteriorated paint is defined by Title 17, CCR, Division 1, Chapter 8, §35022 as a surface coating that is cracking, chalking, flaking, chipping, peeling, non-intact, failed, or otherwise separating from a substrate. Demolition of a deteriorated LCP component would require waste characterization and appropriate disposal. Intact LCP on a component is currently accepted by most landfill facilities; however, contractors are responsible for segregating and characterizing waste streams prior to disposal.

For a solid waste containing lead, the waste is classified as California hazardous when: 1) the total lead content equals or exceeds the respective Total Threshold Limit Concentration (TTLC) of

1,000 milligrams per kilogram (mg/kg); or 2) the soluble lead content equals or exceeds the respective Soluble Threshold Limit Concentration (STLC) of 5 milligrams per liter (mg/l) based on the standard Waste Extraction Test (WET). A waste has the potential for exceeding the lead STLC when the waste's total lead content is greater than or equal to ten times the respective STLC value since the WET uses a 1:10 dilution ratio. Hence, when total lead is detected at a concentration greater than or equal to 50 mg/kg, and assuming that 100 percent of the total lead is soluble, soluble lead analysis is required. Lead-containing waste is classified as "Resource, Conservation, and Recovery Act" (RCRA) hazardous, or Federal hazardous, when the soluble lead content equals or exceeds the Federal regulatory level of 5 mg/l based on the Toxicity Characteristic Leaching Procedure (TCLP).

The above regulatory criteria are based on chemical concentrations. Wastes may also be classified as hazardous based on other criteria such as ignitability; however, for the purposes of this investigation, toxicity (i.e., lead concentration) is the primary factor considered for waste classification since waste generated during the construction activities would not likely warrant testing for ignitability or other criteria. Waste that is classified as either California-hazardous or RCRA-hazardous requires management as a hazardous waste.

Potential hazards exist to workers who remove or cut through LCP coatings during demolition. Dust containing hazardous concentrations of lead may be generated during scraping or cutting materials coated with lead-containing paint. Torching of these materials may produce lead oxide fumes. Therefore, air monitoring and/or respiratory protection may be required during the demolition of materials coated with LCP. Guidelines regarding regulatory provisions for construction work where workers may be exposed to lead are presented in Title 8, CCR, Section 1532.1.

2.3 Architectural Drawings and Previous Survey Activities

We reviewed bridge architectural plans provided by Caltrans prior to field activities. We observed no evidence of asbestos or lead paint use on the architectural plans provided. Previous bridge asbestos survey reports were not available for our review.

3.0 SCOPE OF SERVICES

Mr. David Watts, a California-Certified Asbestos Consultant (CAC), certification No. 98-2404 (expiration September 16, 2011), and Certified Lead Paint Inspector/Assessor and Project Monitor with the California Department of Public Health Services (DPH), certification numbers I-1734 and M-1734 (expiration December 4, 2010), performed the asbestos and LCP survey at the project locations on June 29 and 30, 2010.

3.1 Asbestos

Suspect ACM were grouped into homogeneous areas with representative samples randomly collected from each. In addition, each potential ACM was evaluated for friability. A total of 32 bulk asbestos samples representing four suspect construction materials were collected.

Our procedures for inspection and sampling in accordance with TO-134 are discussed below:

- Collected bulk asbestos samples after first wetting material with a light mist of water. The samples were then cut from the substrate and transferred to a labeled container. Note that when multiple samples were collected, the sampling locations were distributed throughout the homogeneous area (spaces where the material was observed).
- Relinquished bulk asbestos samples to EMSL Analytical, Inc., a California-licensed and Caltrans-approved subcontractor, for asbestos analysis in accordance with United States Environmental Protection Agency (EPA) Test Method 600/R-93/116 using polarized light microscopy (PLM) under chain-of-custody protocol. EMSL Analytical, Inc. is a laboratory accredited by the National Institute of Standards and Technology National Voluntary Laboratory Accreditation Program (NIST-NVLAP) for bulk asbestos fiber analysis. The laboratory analyses were requested on a 5-day turn-around-time.

Bridge and sample group identification numbers, material descriptions, approximate quantities, friability assessments, and photo references are summarized on Table 1. Approximate sample locations are presented on Figures 2A through 2C. Materials represented by the samples collected are shown in the attached photographs.

3.2 Lead Paint

Nine bulk paint samples were collected from suspect LCP observed at the project locations. We were not able to collect samples of traffic striping observed at bridges 19-0038, 19-0024, 19-0023, 19-0042, or 19-0094 due to safety concerns (i.e., traffic). Our sampling procedures in accordance with TO-134 are discussed below:

- Collected bulk samples of suspect LCP using techniques presented in HUD guidelines. In addition, the painted areas were evaluated for evidence of deterioration such as flaking or cracking.
- Relinquished bulk LCP samples under chain-of-custody protocol to Advanced Technology Laboratories, a California-licensed and Caltrans-approved subcontractor, for lead analysis in accordance with EPA Test Method 6010B. Advanced Technology Laboratories is accredited by the DPH for lead analysis. The laboratory analysis was requested on a 5-day turn-around-time.

Paint sample identification numbers, descriptions, peeling and flaking quantities, and photo references are summarized on Table 2. Approximate sample locations are presented on Figure 2. Materials represented by the samples collected are shown in the attached photographs.

4.0 INVESTIGATIVE RESULTS

4.1 Asbestos Analytical Results

Chrysotile asbestos at a concentration of 80% was detected in a sample representing approximately 50 square feet of nonfriable sheet packing used as shims on the barrier rail systems of Bridge 19-0024.

Chrysotile asbestos at a concentration of 80% was detected in a sample representing approximately 75 square feet of nonfriable sheet packing used as shims on the barrier rail systems of Bridge 19-0023.

Chrysotile asbestos at a concentration of 80% was detected in a sample representing approximately 40 square feet of nonfriable sheet packing used as shims on the barrier rail systems of Bridge 19-0042.

Chrysotile asbestos at a concentration of 80% was detected in a sample representing approximately 25 square feet of nonfriable sheet packing used as shims on the barrier rail systems of Bridge 19-0134.

Chrysotile asbestos at a concentration of 80% was detected in a sample representing approximately 70 square feet of nonfriable sheet packing used as shims on the barrier rail systems of Bridge 19-0077.

No asbestos was detected in samples of the suspect materials collected during our survey. A summary of the analytical laboratory test results for asbestos is presented on Table 1. Reproductions of the laboratory reports and chain-of-custody documentation are presented in Appendix B.

4.2 Paint Analytical Results

A sample representing intact white traffic striping observed on Bridge 19-0083 exhibited a total lead concentration of 9.1 mg/kg. A sample representing intact yellow traffic striping observed on the bridge exhibited a total lead concentration of 7,700 mg/kg and a TCLP lead concentration of 1.0 mg/l.

A sample representing intact green paint applied to structural steel on Bridge 19-0038 exhibited a total lead concentration of 190,000 mg/kg and a TCLP lead concentration of 67 mg/l.

A sample representing intact white traffic striping observed on Bridge 19-0099 exhibited a total lead concentration of 12 mg/kg. A sample representing intact yellow traffic striping observed on the bridge exhibited a total lead concentration of 50,000 mg/kg and a TCLP lead concentration of 3.2 mg/l. A sample representing approximately 80 square feet of deteriorated white guardrail paint observed on the bridge exhibited a total lead concentration of 7,500 mg/kg and a TCLP lead concentration of 58 mg/l.

A sample representing intact white traffic striping observed on Bridge 19-0150 exhibited a total lead concentration of 4.7 mg/kg.

A sample representing approximately 200 square feet of deteriorated graffiti/graffiti abatement observed on the north abutment of Bridge 19-0077 exhibited a total lead concentration of 150 mg/kg, a WET lead concentration of 8.6 mg/l, and a TCLP lead concentration of 0.27 mg/l. A sample representing intact white traffic striping observed on the bridge exhibited a total lead concentration of 4.9 mg/kg.

A summary of the analytical laboratory test results for paint is presented on Table 2. Reproductions of the laboratory reports and chain-of-custody documentation are presented in Appendix B.

5.0 RECOMMENDATIONS

Based on our findings, we recommend the following:

5.1 Asbestos

NESHAP regulations do not require that asbestos-containing sheet packing (a Category I nonfriable/nonhazardous material) identified during our survey be removed prior to demolition or be treated as hazardous waste. However, the disturbance of the material is still covered by the Cal/OSHA asbestos standard (Title 8, CCR Section 1529). We recommend that a licensed contractor registered with Cal/OSHA for asbestos-related work perform any activities that would disturb the material. Contractors are responsible for informing the landfill of the contractor's intent to dispose of asbestos waste. Some landfills may require additional waste characterization. Contractors are responsible for segregating and characterizing waste streams prior to disposal.

Geocon also recommends the notification of contractors (that will be conducting renovation or related activities) of the presence of asbestos in their work areas (i.e., provide contractor[s] with a copy of this report and a list of asbestos removed during subsequent activities). Contractors not trained for asbestos work should be instructed not to disturb asbestos during their activities.

Written notification to U.S. EPA Region IX and the California Air Resources Board is required ten working days prior to commencement of *any* demolition activity (whether asbestos is present or not). In accordance with Title 8, CCR 341.9, written notification to the nearest Cal/OSHA district office is required at least 24 hours prior to certain asbestos-related work.

5.2 Lead Paint

Deteriorated white guardrail paint observed on Bridge 19-0099 would be classified as California and Federal hazardous based on lead content. Deteriorated graffiti/graffiti abatement observed on the north abutment of Bridge 19-0077 would be classified as California hazardous based on lead content. As

such, these paints must be removed and disposed of prior to renovation, demolition, or other activities that would disturb them. For budgetary planning purposes, our opinion of probable costs for the removal, containerization, transportation, and disposal of these paints is $5,000.

Contractors removing deteriorated LCP should be required to use personnel who have lead-related construction certification as supervisors or workers, as appropriate, from the California DPH for LCP removal work. Loose and peeling/flaking LCP require removal prior to demolition for waste segregation purposes: to separate potentially hazardous waste (Category III concentrated lead such as loose paint, paint sludge, vacuum debris, and vacuum filters) from non-hazardous demolition debris (Category II intact lead-painted architectural components such as doors, windows, framework, cladding, and trim). Category I waste is low lead waste (typically non-hazardous) such as construction materials, filtered wash water, and plastic sheeting. Contractors are responsible for informing the landfill of the contractor's intent to dispose of RCRA waste, California hazardous waste, and/or architectural components containing intact LCP. Some landfills may require additional waste characterization. Contractors are responsible for segregating and characterizing waste streams prior to disposal.

Green paint applied to structural steel on Bridge 19-0038 would be classified as California and Federal hazardous based on lead content if stripped, blasted, or otherwise separated from the substrate.

Yellow traffic striping sampled during our survey would be classified as California hazardous based on lead content if stripped, blasted, or otherwise separated from the substrate. (We recommend that yellow traffic striping used throughout the project corridor be considered California hazardous.) White traffic striping sampled during our survey would not be classified as California or Federal hazardous based on lead content.

We recommend that all paints at the project location (graffiti, graffiti abatement, signage, traffic striping, etc.) be treated as lead-containing for purposes of determining the applicability of the Cal/OSHA lead standard during any future maintenance, renovation, and demolition activities. This recommendation is based on LCP sample results and the fact that lead was a common ingredient of paints manufactured before 1978 and is still an ingredient of some paints. In accordance with Title 8, CCR, Section 1532.1(p), written notification to the nearest Cal/OSHA district office is required at least 24 hours prior to certain lead-related work. Compliance and training requirements regarding construction activities where workers may be exposed to lead are presented in Title 8, CCR, Section 1532.1, subsections (e) and (l), respectively. Contractors are responsible for segregating and characterizing waste streams prior to disposal.

6.0 REPORT LIMITATIONS

The asbestos and LCP surveys were conducted in conformance with generally accepted standards of practice for identifying and evaluating asbestos and LCP in structures. The surveys addressed only those structures identified in Section 1.1. Due to the nature of structure surveys, asbestos and LCP use, and laboratory analytical limitations, some ACM or LCP at the project location may not have been identified. Spaces such as cavities, voids, crawlspaces, and pipe chases may have been concealed to our investigator. Previous renovation work may have concealed or covered spaces or materials or may have partially demolished materials and left debris in inaccessible areas. Additionally, renovation activities may have partially replaced ACM with indistinguishable non-ACM. Asbestos and/or LCP may exist in areas of the structures that were not accessible or sampled in conjunction with this TO.

During renovation or demolition operations, suspect materials may be uncovered which are different from those accessible for sampling during this assessment. Personnel in charge of renovation/demolition should be alerted to note materials uncovered during such activities that differ substantially from those included in this or previous assessment reports. If suspect ACM and/or LCP are found, additional sampling and analysis should be performed to determine if the materials contain asbestos or lead.

This report has been prepared exclusively for Caltrans. The information contained herein is only valid as of the date of the report and will require an update to reflect additional information obtained.

This report is not a comprehensive site characterization and should not be construed as such. The findings as presented in this report are predicated on the results of the limited sampling and laboratory testing performed. In addition, the information obtained is not intended to address potential impacts related to sources other than those specified herein. Therefore, the report should be deemed conclusive with respect to only the information obtained. We make no warranty, express or implied, with respect to the content of this report or any subsequent reports, correspondence or consultation. Geocon strived to perform the services summarized herein in accordance with the local standard of care in the geographic region at the time the services were rendered.

The contents of this report reflect the views of the author who is responsible for the facts and accuracy of the data presented herein. The contents do not necessarily reflect the official views or policies of the State of California or the Federal Highway Administration. This report does not constitute a standard, specification, or regulation.

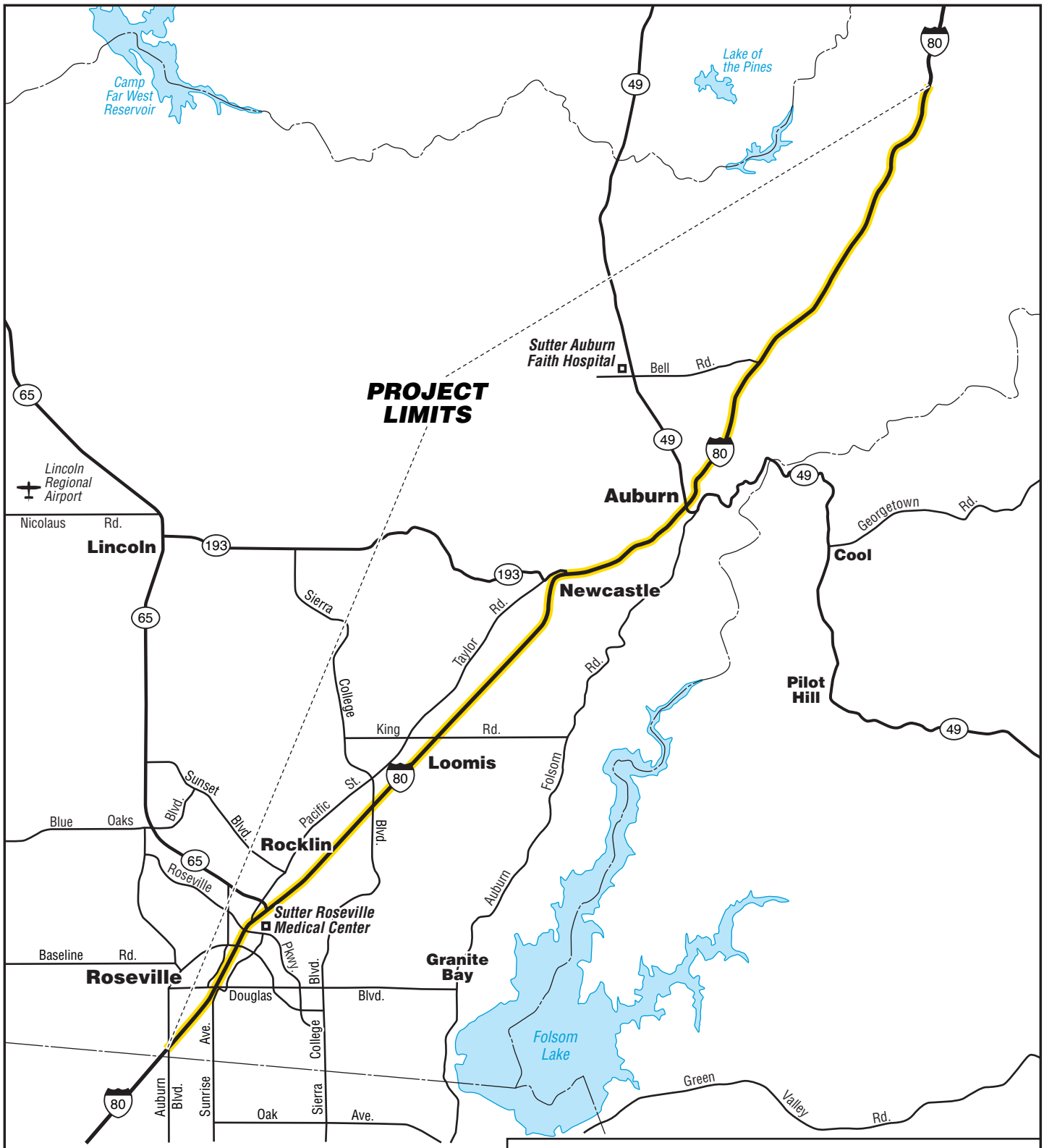

GEOCON CONSULTANTS, INC.
3160 GOLD VALLEY DR. – SUITE 800 - RANCHO CORDOVA, CA. 95742
PHONE 916 852-9118 – FAX 916 852-9132

Interstate 80 Post Mile 0.3 to 29.3

Placer County, California

GEOCON Proj. No. S9300-06-134

Task Order No. 134, EA 03-3E0901

VICINITY MAP

August 2010

Figure 1

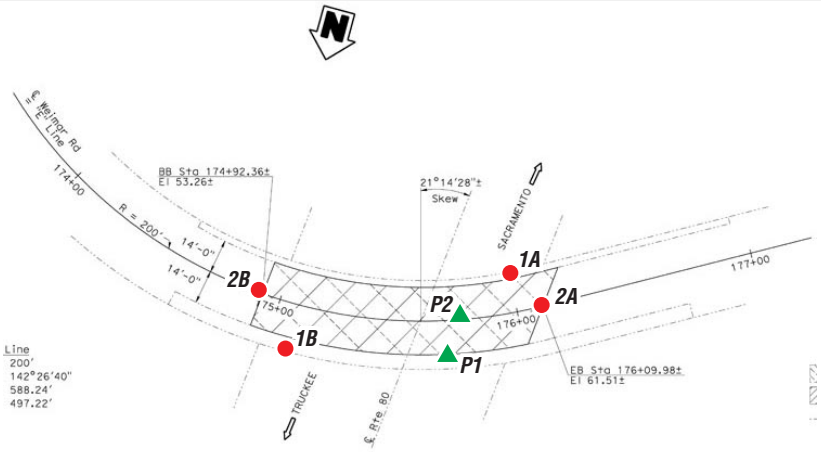

WEIMAR CROSS ROAD OC
BR NO 19-0083 RTE 80 PM 29.32

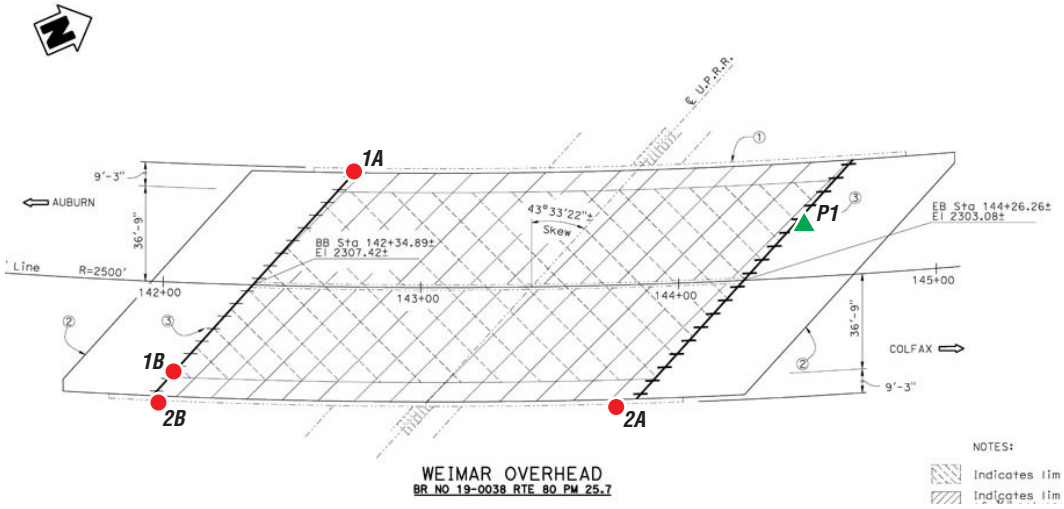

WEIMAR OVERHEAD
BR NO 19-0038 RTE 80 PM 25.7

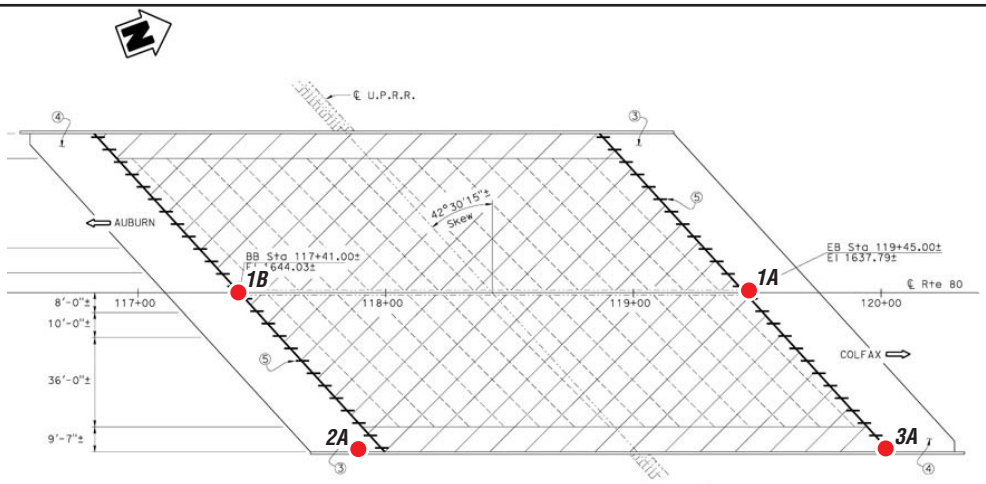

BOWMAN OVERHEAD (NORTH)
BR NO 19-0024 RTE 80 PM 20.69

LEGEND:

- ● Approximate Asbestos Sample Location
- ▲ Approximate Paint Sample Location

GEOCON
CONSULTANTS, INC.
3160 GOLD VALLEY DR. – SUITE 800 - RANCHO CORDOVA, CA. 95742
PHONE 916 852-9118 – FAX 916 852-9132

Interstate 80 Post Mile 0.3 to 29.3

Placer County, California	**SITE PLAN**	
GEOCON Proj. No. S9300-06-134		
Task Order No. 134, EA 03-3E0901	August 2010	Figure 2A

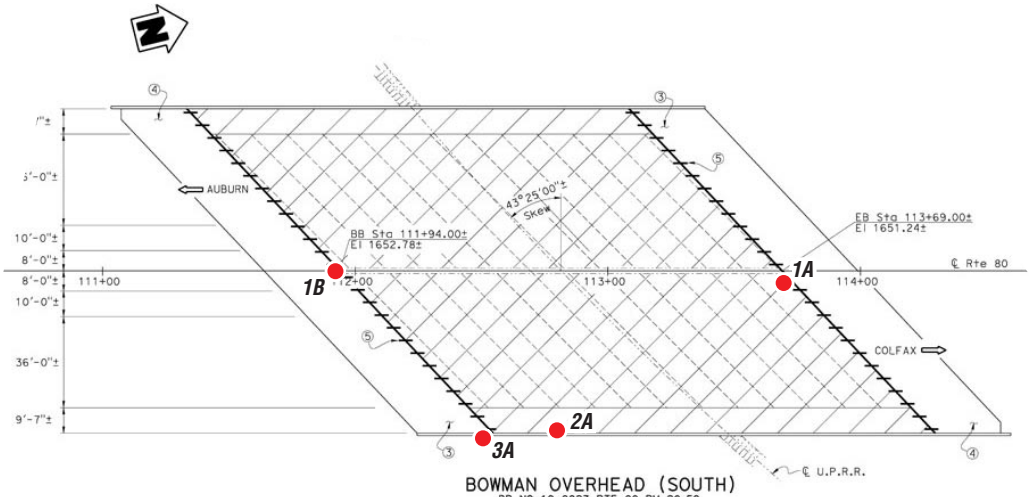

BOWMAN OVERHEAD (SOUTH)
BR NO 19-0023 RTE 80 PM 20.59

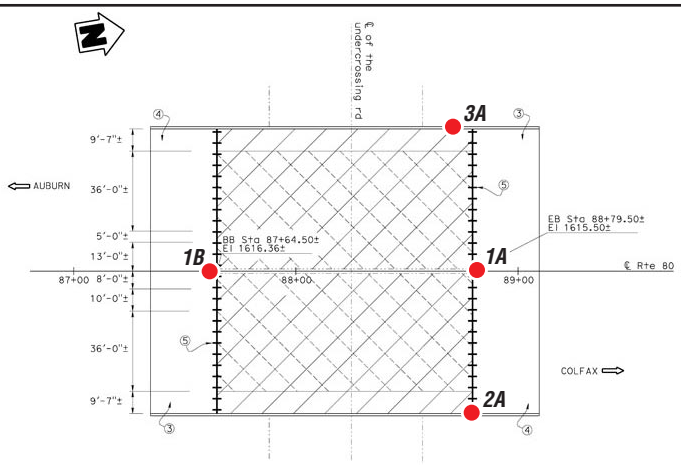

BOWMAN UC
BR NO 19-0042 RTE 80 PM 20.13

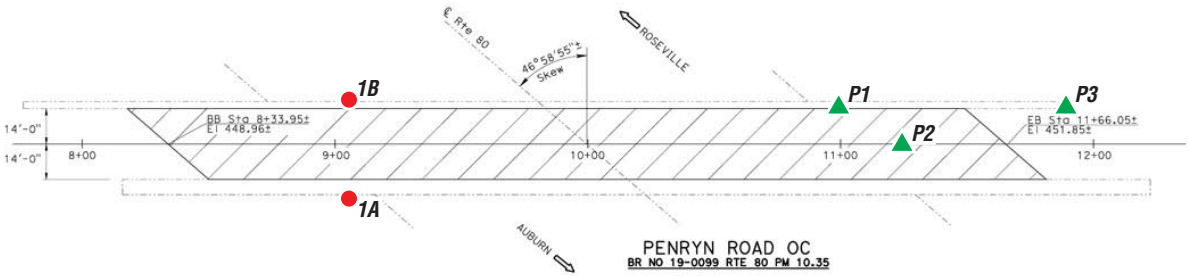

PENRYN ROAD OC
BR NO 19-0099 RTE 80 PM 10.35

LEGEND:

- ● Approximate Asbestos Sample Location
- ▲ Approximate Paint Sample Location

GEOCON CONSULTANTS, INC.
3160 GOLD VALLEY DR. – SUITE 800 - RANCHO CORDOVA, CA. 95742
PHONE 916 852-9118 – FAX 916 852-9132

Interstate 80 Post Mile 0.3 to 29.3

Placer County, California

GEOCON Proj. No. S9300-06-134

SITE PLAN

Task Order No. 134, EA 03-3E0901 | August 2010 | Figure 2B

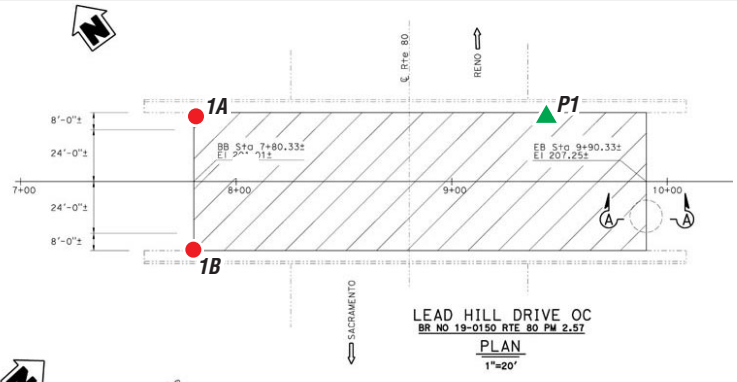

LEAD HILL DRIVE OC
BR NO 19-0150 RTE 80 PM 2.57
PLAN
1"=20'

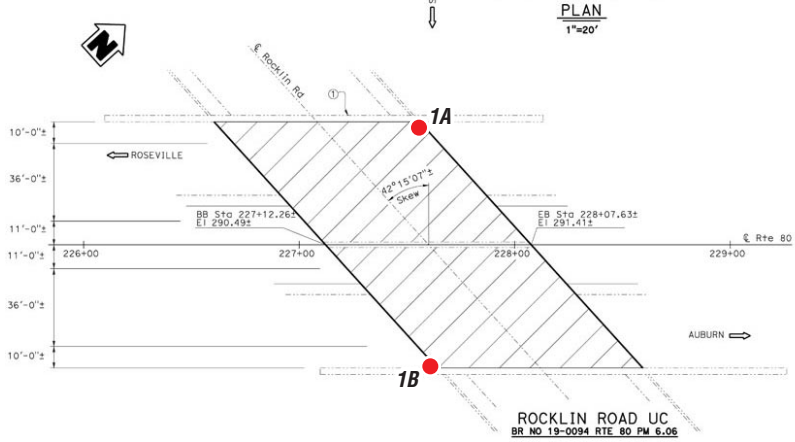

ROCKLIN ROAD UC
BR NO 19-0094 RTE 80 PM 6.06

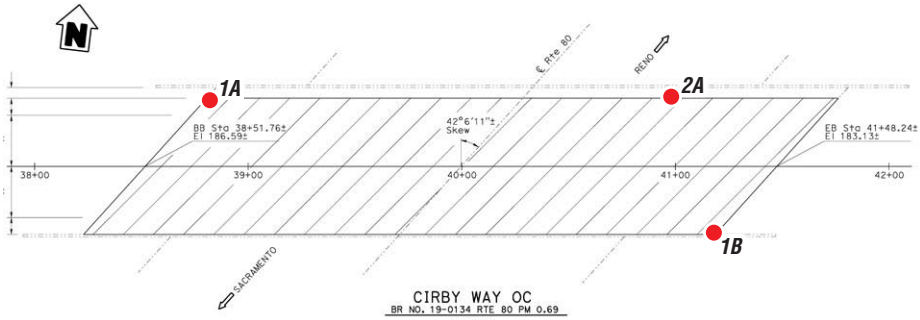

CIRBY WAY OC
BR NO. 19-0134 RTE 80 PM 0.69
PLAN
1"=20'

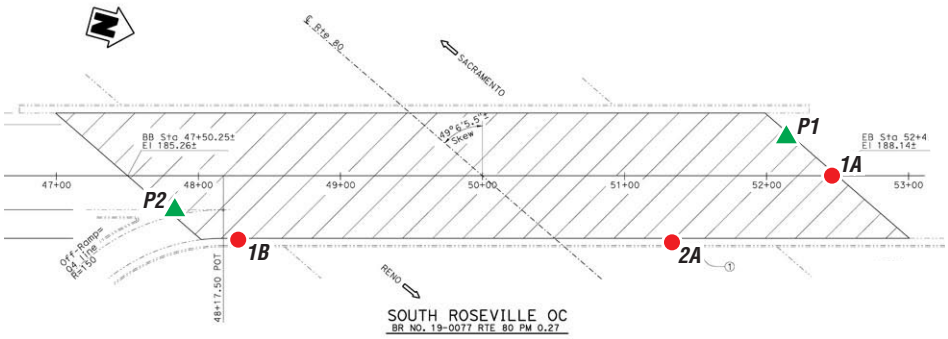

SOUTH ROSEVILLE OC
BR NO. 19-0077 RTE 80 PM 0.27

LEGEND:

- ● Approximate Asbestos Sample Location
- ▲ Approximate Paint Sample Location

GEOCON
CONSULTANTS, INC.
3160 GOLD VALLEY DR. – SUITE 800 - RANCHO CORDOVA, CA. 95742
PHONE 916 852-9118 – FAX 916 852-9132

Interstate 80 Post Mile 0.3 to 29.3

Placer County, California

SITE PLAN

GEOCON Proj. No. S9300-06-134

Task Order No. 134, EA 03-3E0901 | August 2010 | Figure 2C

Photo 1 – Bridge 19-0083

Photo 2 – Bridge 19-0083 expansion joint fill material

Photo 3 – Bridge 19-0083 deck

GEOCON
CONSULTANTS, INC.
3160 GOLD VALLEY DR – SUITE 800 – RANCHO CORDOVA, CA 95742
PHONE 916.852.9118 – FAX 916.852.9132

PHOTOGRAPHS 1, 2, & 3		
Interstate 80 Post Mile 0.3 to 29.3 (Bridges) Placer County, California		
S9300-06-134	Task Order No. 134	August 2010

Photo 4 – Bridge 19-0038

Photo 5 – Bridge 19-0038 expansion joint fill material

Photo 6 – Bridge 19-0038 deck

Photo 7 – Bridge 19-0038 piping

Photo 8 – Bridge 19-0024

Photo 9 – Bridge 19-0024 expansion joint fill material

GEOCON
CONSULTANTS, INC.
3160 GOLD VALLEY DR – SUITE 800 – RANCHO CORDOVA, CA 95742
PHONE 916.852.9118 – FAX 916.852.9132

PHOTOGRAPHS 7, 8, & 9		
Interstate 80 Post Mile 0.3 to 29.3 (Bridges) Placer County, California		
S9300-06-134	Task Order No. 134	August 2010

Photo 10 – Bridge 19-0024 piping

Photo 11 – Bridge 19-0024 shims

Photo 12 – Bridge 19-0024 deck

GEOCON
CONSULTANTS, INC.
3160 GOLD VALLEY DR – SUITE 800 – RANCHO CORDOVA, CA 95742
PHONE 916.852.9118 – FAX 916.852.9132

PHOTOGRAPHS 10, 11, & 12		
Interstate 80 Post Mile 0.3 to 29.3 (Bridges) Placer County, California		
S9300-06-134	Task Order No. 134	August 2010

Photo 13 – Bridge 19-0023

Photo 14 – Bridge 19-0023

Photo 15 – Bridge 19-0023 expansion joint fill material

Photo 16 – Bridge 19-0023 piping

Photo 17 – Bridge 19-0023 shims

Photo 18 – Bridge 19-0023 deck

Photo 19 – Bridge 19-0042

Photo 20 – Bridge 19-0042 expansion joint fill material

Photo 21 – Bridge 19-0042 deck

Photo 22 – Bridge 19-0042 piping

Photo 23 – Bridge 19-0042 shims

Photo 24 – Bridge 19-0099

Photo 25 – Bridge 19-0099 expansion joint fill material

Photo 26 – Bridge 19-0099 deck

Photo 27 – Bridge 19-0099 guardrails

Photo 28 – Bridge 19-0094

Photo 29 – Bridge 19-0094 expansion joint fill material

Photo 30 – Bridge 19-0094 deck

Photo 31 – Bridge 19-0150

Photo 32 – Bridge 19-0150 expansion joint fill material

Photo 33 – Bridge 19-0150 deck

Photo 34 – Bridge 19-0134

Photo 35 – Bridge 19-0134 expansion joint fill material

Photo 36 – Bridge 19-0134 shims

Photo 37– Bridge 19-0134 deck

Photo 38 – Bridge 19-0077

Photo 39 – Bridge 19-0077 expansion joint fill material

Photo 40 – Bridge 19-0077 shims

Photo 41– Bridge 19-0077 graffiti abatement (north abutment)

Photo 42 – Bridge 19-0077 deck

TABLE 1
SUMMARY OF ASBESTOS ANALYTICAL RESULTS
INTERSTATE 80 POST MILE 0.3 TO 29.3 (BRIDGES)
CALTRANS CONTRACT 03A1638, TASK ORDER NO. 134, EA 03-3E0901
PLACER COUNTY, CALIFORNIA

Polarized Light Microscopy (PLM) - EPA Test Method 600/R-93/116

Bridge No.	Sample Group No.	Description of Material	Approximate Quantity	Friable	Site Photo	Asbestos Content
19-0083	0083-1	Expansion joint fill material (abutments)	NA	NA	2	ND
	0083-2	Expansion joint fill material (span)	NA	NA	2	ND
19-0038	0038-1	Expansion joint fill material	NA	NA	5	ND
	0038-2	Pipe wrap	NA	NA	7	ND
19-0024	0024-1	Expansion joint fill material	NA	NA	9	ND
	0024-2	Pipe wrap	NA	NA	10	ND
	0024-3	**Shims**	**50 square feet**	**No**	**11**	**80%**
19-0023	0023-1	Expansion joint fill material	NA	NA	15	ND
	0023-2	Pipe wrap	NA	NA	16	ND
	0023-3	**Shims**	**75 square feet**	**No**	**17**	**80%**
19-0042	0042-1	Expansion joint fill material	NA	NA	20	ND
	0042-2	Pipe wrap	NA	NA	22	ND
	0042-3	**Shims**	**40 square feet**	**No**	**23**	**80%**
19-0099	0099-1	Expansion joint fill material	NA	NA	25	ND
19-0094	0094-1	Expansion joint fill material	NA	NA	29	ND
19-0150	0150-1	Expansion joint fill material	NA	NA	32	ND

TABLE 1
SUMMARY OF ASBESTOS ANALYTICAL RESULTS
INTERSTATE 80 POST MILE 0.3 TO 29.3 (BRIDGES)
CALTRANS CONTRACT 03A1638, TASK ORDER NO. 134, EA 03-3E0901
PLACER COUNTY, CALIFORNIA

Polarized Light Microscopy (PLM) - EPA Test Method 600/R-93/116

Bridge No.	Sample Group No.	Description of Material	Approximate Quantity	Friable	Site Photo	Asbestos Content
19-0134	0134-1	Expansion joint fill material	NA	NA	35	ND
	0134-2	**Shims**	**25 square feet**	**No**	**36**	**80%**
19-0077	0077-1	Expansion joint fill material	NA	NA	39	ND
	0077-2	**Shims**	**70 square feet**	**No**	**40**	**80%**

Notes:

NA = Not applicable (no asbestos detected)

ND = Not detected

TABLE 2
SUMMARY OF PAINT ANALYTICAL RESULTS - TOTAL AND SOLUBLE LEAD
INTERSTATE 80 POST MILE 0.3 TO 29.3 (BRIDGES)
CALTRANS CONTRACT 03A1638, TASK ORDER NO. 134, EA 03-3E0901
PLACER COUNTY, CALIFORNIA

Bridge No.	Paint Sample No.	Paint Description	Approximate Quantity Peeling/Flaking	Site Photos	Total Lead (mg/kg)	WET Lead (mg/l)	TCLP Lead (mg/l)
19-0083	0083-P1	White traffic striping	Intact	3	9.1	---	---
	0083-P2	Yellow traffic striping	Intact	3	7,700	---	1.0
19-0038	0038-P1	Green (structural steel)	Intact	4 and 7	190,000	---	67
19-0099	0099-P1	White traffic striping	Intact	26	12	---	---
	0099-P2	Yellow traffic striping	Intact	26	50,000	---	3.2
	0099-P3	White (guardrails)	80 square feet	27	7,500	---	58
19-0150	0150-P1	White traffic striping	Intact	33	4.7	---	---
19-0077	0077-P1	Gray (graffiti abatement)	200 square feet	41	150	8.6	0.27
	0077-P2	White traffic striping	Intact	42	4.9	---	---

Notes:

mg/kg = milligrams per kilogram (EPA Test Method 6010B)
WET = Waste Extraction Test (EPA Test Method 7420)
mg/l = milligrams per liter
TCLP = Toxicity Characteristic Leaching Procedure (EPA Test Method 1311)
--- = Not analyzed

APPENDIX A

Task Order 34 Bridge List

Bridge Name	Bridge Number	Post Mile
1. South Roseville OC	19-0077	0.27
2. Cirby Way OC	19-0134	0.69
3. Lead Hill Drive OC	19-0150	2.57
4. Rocklin Road UC	19-0094	6.06
5. Penryn Road OC	19-0099	10.35
6. Bowman UC	19-0042	20.13
7. Bowman OH (south)	19-0023	20.59
8. Bowman OH (north)	19-0024	20.69
9. Weimar OH	19-0038	28.7
10. Weimar Cross Road OC	19-0083	29.32

APPENDIX B

EMSL Analytical, Inc
2235 Polvorosa Ave , Suite 230, San Leandro, CA 94577
Phone: (510) 895-3675 Fax: (510) 895-3680 Email: milpitaslab@emsl.com

Attn: **David Watts**
Geocon Consultants
6671 Brisa Street
Livermore, CA 94550

Fax: (925) 371-5915 Phone: (925) 371-5900
Project: **S9300-06-134**

Customer ID: GECN21
Customer PO: S9300-06-134
Received: 07/01/10 10:30 AM
EMSL Order: 091005815

EMSL Proj: S9300-06-**
Analysis Date: 7/9/2010

Test Report: Asbestos Analysis of Bulk Materials via EPA 600/R-93/116 Method using Polarized Light Microscopy

			Non-Asbestos				Asbestos
Sample	**Description**	**Appearance**	**%**	**Fibrous**	**%**	**Non-Fibrous**	**% Type**
0083-1A-EJM *091005815-0001*		Black Fibrous Homogeneous	40%	Cellulose	60%	Non-fibrous (other)	**None Detected**
0083-1B-EJM *091005815-0002*		Black Fibrous Homogeneous	40%	Cellulose	60%	Non-fibrous (other)	**None Detected**
0083-2A-EJM *091005815-0003*		Black Non-Fibrous Homogeneous			100%	Non-fibrous (other)	**None Detected**
0083-2B-EJM *091005815-0004*		Black Non-Fibrous Homogeneous			100%	Non-fibrous (other)	**None Detected**
0038-1A-EJM *091005815-0005*		Brown Fibrous Homogeneous	40%	Cellulose	60%	Non-fibrous (other)	**None Detected**
0038-1B-EJM *091005815-0006*		Brown Fibrous Homogeneous	40%	Cellulose	60%	Non-fibrous (other)	**None Detected**
0038-2A-Pipe Wrap *091005815-0007*		Black Non-Fibrous Homogeneous			100%	Non-fibrous (other)	**None Detected**

Initial report from 07/09/2010 14:45:19

Analyst(s)

Jorge Leon (32)

Baojia Ke, Laboratory Manager
or other approved signatory

Due to magnification limitations inherent in PLM, asbestos fibers in dimensions below the resolution capability of PLM may not be detected. Samples reported as <1% or none detected may require additional testing by TEM to confirm asbestos quantities. The above test report relates only to the items tested and may not be reproduced in any form without the express written approval of EMSL Analytical, Inc. EMSL's liability is limited to the cost of analysis. EMSL bears no responsibility for sample collection activities or analytical method limitations. Interpretation and use of test results are the responsibility of the client.Samples received in good condition unless otherwise noted.
Samples analyzed by EMSL Analytical, Inc 2235 Polvorosa Ave , Suite 230, San Leandro CA NVLAP Lab Code 101048-3, MA AA000201, WA C2007

EMSL Analytical, Inc
2235 Polvorosa Ave , Suite 230, San Leandro, CA 94577
Phone: (510) 895-3675 Fax: (510) 895-3680 Email: milpitaslab@emsl.com

Attn: **David Watts**
Geocon Consultants
6671 Brisa Street
Livermore, CA 94550

Fax: (925) 371-5915 Phone: (925) 371-5900
Project: **S9300-06-134**

Customer ID: GECN21
Customer PO: S9300-06-134
Received: 07/01/10 10:30 AM
EMSL Order: 091005815

EMSL Proj: S9300-06-**
Analysis Date: 7/9/2010

Test Report: Asbestos Analysis of Bulk Materials via EPA 600/R-93/116 Method using Polarized Light Microscopy

Sample	Description	Appearance	Non-Asbestos %	Fibrous	Non-Asbestos %	Non-Fibrous	Asbestos %	Type
0038-2B-Pipe Wrap *091005815-0008*		Black Non-Fibrous Homogeneous			100%	Non-fibrous (other)		**None Detected**
0024-1A-EJM *091005815-0009*		Brown Fibrous Homogeneous	40%	Cellulose	60%	Non-fibrous (other)		**None Detected**
0024-1B-EJM *091005815-0010*		Brown Fibrous Homogeneous	40%	Cellulose	60%	Non-fibrous (other)		**None Detected**
0024-2A-Pipe Wrap *091005815-0011*		Black Non-Fibrous Homogeneous			100%	Non-fibrous (other)		**None Detected**
0024-3A-Shims *091005815-0012*		Black Fibrous Homogeneous			20%	Non-fibrous (other)	**80%**	**Chrysotile**
0023-1A-EJM *091005815-0013*		Brown Fibrous Homogeneous	40%	Cellulose	60%	Non-fibrous (other)		**None Detected**
0023-1B-EJM *091005815-0014*		Brown Fibrous Homogeneous	40%	Cellulose	60%	Non-fibrous (other)		**None Detected**

Initial report from 07/09/2010 14:45:19

Analyst(s)

Jorge Leon (32)

Baojia Ke, Laboratory Manager
or other approved signatory

Due to magnification limitations inherent in PLM, asbestos fibers in dimensions below the resolution capability of PLM may not be detected. Samples reported as <1% or none detected may require additional testing by TEM to confirm asbestos quantities. The above test report relates only to the items tested and may not be reproduced in any form without the express written approval of EMSL Analytical, Inc. EMSL's liability is limited to the cost of analysis. EMSL bears no responsibility for sample collection activities or analytical method limitations. Interpretation and use of test results are the responsibility of the client.Samples received in good condition unless otherwise noted.
Samples analyzed by EMSL Analytical, Inc 2235 Polvorosa Ave , Suite 230, San Leandro CA NVLAP Lab Code 101048-3, MA AA000201, WA C2007

EMSL Analytical, Inc
2235 Polvorosa Ave , Suite 230, San Leandro, CA 94577
Phone: (510) 895-3675 Fax: (510) 895-3680 Email: milpitaslab@emsl.com

Attn: **David Watts**
Geocon Consultants
6671 Brisa Street
Livermore, CA 94550

Fax: (925) 371-5915 Phone: (925) 371-5900
Project: **S9300-06-134**

Customer ID: GECN21
Customer PO: S9300-06-134
Received: 07/01/10 10:30 AM
EMSL Order: 091005815

EMSL Proj: S9300-06-**
Analysis Date: 7/9/2010

Test Report: Asbestos Analysis of Bulk Materials via EPA 600/R-93/116 Method using Polarized Light Microscopy

Sample	Description	Appearance	Non-Asbestos %	Fibrous	Non-Asbestos %	Non-Fibrous	Asbestos %	Type
0023-2A-Pipe Wrap *091005815-0015*		Black Non-Fibrous Homogeneous			100%	Non-fibrous (other)		**None Detected**
0023-3A-Shims *091005815-0016*		Black Fibrous Homogeneous			20%	Non-fibrous (other)	**80%**	**Chrysotile**
0042-1A-EJM *091005815-0017*		Brown Fibrous Homogeneous	40%	Cellulose	60%	Non-fibrous (other)		**None Detected**
0042-1B-EJM *091005815-0018*		Brown Fibrous Homogeneous	40%	Cellulose	60%	Non-fibrous (other)		**None Detected**
0042-2A-Pipe Wrap *091005815-0019*		Black Non-Fibrous Homogeneous			100%	Non-fibrous (other)		**None Detected**
0042-3A-Shims *091005815-0020*		Black Fibrous Homogeneous			20%	Non-fibrous (other)	**80%**	**Chrysotile**
0099-1A-EJM *091005815-0021*		Brown Fibrous Homogeneous	40%	Cellulose	60%	Non-fibrous (other)		**None Detected**

Initial report from 07/09/2010 14:45:19

Analyst(s)

Jorge Leon (32)

Baojia Ke, Laboratory Manager
or other approved signatory

Due to magnification limitations inherent in PLM, asbestos fibers in dimensions below the resolution capability of PLM may not be detected. Samples reported as <1% or none detected may require additional testing by TEM to confirm asbestos quantities. The above test report relates only to the items tested and may not be reproduced in any form without the express written approval of EMSL Analytical, Inc. EMSL's liability is limited to the cost of analysis. EMSL bears no responsibility for sample collection activities or analytical method limitations. Interpretation and use of test results are the responsibility of the client.Samples received in good condition unless otherwise noted.
Samples analyzed by EMSL Analytical, Inc 2235 Polvorosa Ave , Suite 230, San Leandro CA NVLAP Lab Code 101048-3, MA AA000201, WA C2007

EMSL Analytical, Inc
2235 Polvorosa Ave , Suite 230, San Leandro, CA 94577
Phone: (510) 895-3675 Fax: (510) 895-3680 Email: milpitaslab@emsl.com

Attn: **David Watts**
Geocon Consultants
6671 Brisa Street
Livermore, CA 94550

Fax: (925) 371-5915 Phone: (925) 371-5900
Project: **S9300-06-134**

Customer ID: GECN21
Customer PO: S9300-06-134
Received: 07/01/10 10:30 AM
EMSL Order: 091005815

EMSL Proj: S9300-06-**
Analysis Date: 7/9/2010

Test Report: Asbestos Analysis of Bulk Materials via EPA 600/R-93/116 Method using Polarized Light Microscopy

			Non-Asbestos				Asbestos
Sample	**Description**	**Appearance**	**%**	**Fibrous**	**%**	**Non-Fibrous**	**% Type**
0099-1B-EJM *091005815-0022*		Brown Fibrous Homogeneous	40%	Cellulose	60%	Non-fibrous (other)	**None Detected**
0094-1A-EJM *091005815-0023*		Brown Fibrous Homogeneous	40%	Cellulose	60%	Non-fibrous (other)	**None Detected**
0094-1B-EJM *091005815-0024*		Brown Fibrous Homogeneous	40%	Cellulose	60%	Non-fibrous (other)	**None Detected**
0150-1A-EJM *091005815-0025*		Brown Fibrous Homogeneous	40%	Cellulose	60%	Non-fibrous (other)	**None Detected**
0150-1B-EJM *091005815-0026*		Brown Fibrous Homogeneous	40%	Cellulose	60%	Non-fibrous (other)	**None Detected**
0134-1A-EJM *091005815-0027*		Brown Fibrous Homogeneous	40%	Cellulose	60%	Non-fibrous (other)	**None Detected**
0134-1B-EJM *091005815-0028*		Brown Fibrous Homogeneous	40%	Cellulose	60%	Non-fibrous (other)	**None Detected**

Initial report from 07/09/2010 14:45:19

Analyst(s)

Jorge Leon (32)

Baojia Ke, Laboratory Manager
or other approved signatory

Due to magnification limitations inherent in PLM, asbestos fibers in dimensions below the resolution capability of PLM may not be detected. Samples reported as <1% or none detected may require additional testing by TEM to confirm asbestos quantities. The above test report relates only to the items tested and may not be reproduced in any form without the express written approval of EMSL Analytical, Inc. EMSL's liability is limited to the cost of analysis. EMSL bears no responsibility for sample collection activities or analytical method limitations. Interpretation and use of test results are the responsibility of the client.Samples received in good condition unless otherwise noted.
Samples analyzed by EMSL Analytical, Inc 2235 Polvorosa Ave , Suite 230, San Leandro CA NVLAP Lab Code 101048-3, MA AA000201, WA C2007

EMSL Analytical, Inc
2235 Polvorosa Ave , Suite 230, San Leandro, CA 94577
Phone: (510) 895-3675 Fax: (510) 895-3680 Email: milpitaslab@emsl.com

Attn: **David Watts**
Geocon Consultants
6671 Brisa Street
Livermore, CA 94550

Fax: (925) 371-5915 Phone: (925) 371-5900
Project: **S9300-06-134**

Customer ID: GECN21
Customer PO: S9300-06-134
Received: 07/01/10 10:30 AM
EMSL Order: 091005815

EMSL Proj: S9300-06-**
Analysis Date: 7/9/2010

Test Report: Asbestos Analysis of Bulk Materials via EPA 600/R-93/116 Method using Polarized Light Microscopy

			Non-Asbestos				Asbestos	
Sample	**Description**	**Appearance**	**%**	**Fibrous**	**%**	**Non-Fibrous**	**%**	**Type**
0134-2A-Shims *091005815-0029*		Gray Fibrous Homogeneous			20%	Non-fibrous (other)	**80%**	**Chrysotile**
0077-1A-EJM *091005815-0030*		Brown Fibrous Homogeneous	40%	Cellulose	60%	Non-fibrous (other)	**None Detected**	
0077-1B-EJM *091005815-0031*		Brown Fibrous Homogeneous	40%	Cellulose	60%	Non-fibrous (other)	**None Detected**	
0077-2A-Shims *091005815-0032*		Gray/Black Fibrous Homogeneous			20%	Non-fibrous (other)	**80%**	**Chrysotile**

Initial report from 07/09/2010 14:45:19

Analyst(s)

Jorge Leon (32)

Baojia Ke, Laboratory Manager
or other approved signatory

Due to magnification limitations inherent in PLM, asbestos fibers in dimensions below the resolution capability of PLM may not be detected. Samples reported as <1% or none detected may require additional testing by TEM to confirm asbestos quantities. The above test report relates only to the items tested and may not be reproduced in any form without the express written approval of EMSL Analytical, Inc. EMSL's liability is limited to the cost of analysis. EMSL bears no responsibility for sample collection activities or analytical method limitations. Interpretation and use of test results are the responsibility of the client.Samples received in good condition unless otherwise noted.
Samples analyzed by EMSL Analytical, Inc 2235 Polvorosa Ave , Suite 230, San Leandro CA NVLAP Lab Code 101048-3, MA AA000201, WA C2007

THIS IS THE LAST PAGE OF THE REPORT.

July 09, 2010

Dave Watts
Geocon Consultants, Inc.
6671 Brisa Street
Livermore, CA 94550

TEL: (925) 371-5900
FAX: (925) 371-5915

ELAP No.: 1838
NELAP No.: 02107CA
NEVADA.: CA-401
CSDLAC No.: 10196

Workorder No.: 112524

RE: PLACER CO. BRIDGES, S9300-06-134

Attention: Dave Watts

Enclosed are the results for sample(s) received on July 01, 2010 by Advanced Technology Laboratories . The sample(s) are tested for the parameters as indicated in the enclosed chain of custody in accordance with the applicable laboratory certifications.

Thank you for the opportunity to service the needs of your company.

Please feel free to call me at (562)989-4045 if I can be of further assistance to your company.

Sincerely,

Eddie F. Rodriguez
Laboratory Director

The cover letter and the case narrative are an integral part of this analytical report and cannot be reproduced in part or in its entirety without written permission from the client and Advanced Technology Laboratories.

CLIENT: Geocon Consultants, Inc.
Project: PLACER CO. BRIDGES, S9300-06-134
Lab Order: 112524

CASE NARRATIVE

Analytical Comments for Method 6010

Dilution was necessary for samples 112524-002A, 112524-003A, 112524-005A, 112524-006A and 112524-008A, due to sample matrix.

Advanced Technology Laboratories
3275 Walnut Avenue, Signal Hill, CA 90755 Tel: 562. 989.4045 Fax: 562.989.4040

Advanced Technology Laboratories

ANALYTICAL RESULTS

Print Date: *09-Jul-10*

CLIENT: Geocon Consultants, Inc.
Project: PLACER CO. BRIDGES, S9300-06-134
Lab Order: 112524

Lab ID: 112524-001 **Collection Date:** 6/29/2010 8:00:00 AM
Client Sample ID: 0083-P1 **Matrix:** PAINT CHIPS

Analyses	Result	PQL	Qual	Units	DF	Date Analyzed
ICP METALS						
EPA 3050B			**EPA 6010B**			
RunID: ICP8_100706C	QC Batch: 65194			PrepDate:	7/6/2010	Analyst: **SRB**
Lead	9.1	2.0		mg/Kg	1	7/7/2010 11:37 AM

Lab ID: 112524-002 **Collection Date:** 6/29/2010 8:00:00 AM
Client Sample ID: 0083-P2 **Matrix:** PAINT CHIPS

Analyses	Result	PQL	Qual	Units	DF	Date Analyzed
ICP METALS						
EPA 3050B			**EPA 6010B**			
RunID: ICP8_100706C	QC Batch: 65194			PrepDate:	7/6/2010	Analyst: **SRB**
Lead	7700	10		mg/Kg	5	7/7/2010 11:42 AM

Lab ID: 112524-003 **Collection Date:** 6/29/2010 10:17:00 AM
Client Sample ID: 0038-P1 **Matrix:** PAINT CHIPS

Analyses	Result	PQL	Qual	Units	DF	Date Analyzed
ICP METALS						
EPA 3050B			**EPA 6010B**			
RunID: ICP8_100706C	QC Batch: 65194			PrepDate:	7/6/2010	Analyst: **SRB**
Lead	190000	200		mg/Kg	100	7/6/2010 06:24 PM

Lab ID: 112524-004 **Collection Date:** 6/30/2010 8:11:00 AM
Client Sample ID: 0099-P1 **Matrix:** PAINT CHIPS

Analyses	Result	PQL	Qual	Units	DF	Date Analyzed
ICP METALS						
EPA 3050B			**EPA 6010B**			
RunID: ICP8_100706C	QC Batch: 65194			PrepDate:	7/6/2010	Analyst: **SRB**
Lead	12	2.0		mg/Kg	1	7/7/2010 11:46 AM

Qualifiers:

B	Analyte detected in the associated Method Blank	E	Value above quantitation range
H	Holding times for preparation or analysis exceeded	ND	Not Detected at the Reporting Limit
S	Spike/Surrogate outside of limits due to matrix interference		Results are wet unless otherwise specified
DO	Surrogate Diluted Out		

Advanced Technology Laboratories
3275 Walnut Avenue, Signal Hill, CA 90755 Tel: 562. 989.4045 Fax: 562.989.4040

Advanced Technology Laboratories

ANALYTICAL RESULTS

Print Date: *09-Jul-10*

CLIENT: Geocon Consultants, Inc. **Lab Order:** 112524
Project: PLACER CO. BRIDGES, S9300-06-134

Lab ID: 112524-005 **Collection Date:** 6/30/2010 8:19:00 AM
Client Sample ID: 0099-P2 **Matrix:** PAINT CHIPS

Analyses	Result	PQL	Qual	Units	DF	Date Analyzed
ICP METALS						
EPA 3050B			**EPA 6010B**			
RunID: ICP8_100706C	QC Batch: 65194				PrepDate: 7/6/2010	Analyst: **SRB**
Lead	50000	200		mg/Kg	100	7/6/2010 06:33 PM

Lab ID: 112524-006 **Collection Date:** 6/30/2010 8:51:00 AM
Client Sample ID: 0099-P3 **Matrix:** PAINT CHIPS

Analyses	Result	PQL	Qual	Units	DF	Date Analyzed
ICP METALS						
EPA 3050B			**EPA 6010B**			
RunID: ICP8_100706C	QC Batch: 65194				PrepDate: 7/6/2010	Analyst: **SRB**
Lead	7500	20		mg/Kg	10	7/7/2010 11:52 AM

Lab ID: 112524-007 **Collection Date:** 6/30/2010 11:14:00 AM
Client Sample ID: 0150-P1 **Matrix:** PAINT CHIPS

Analyses	Result	PQL	Qual	Units	DF	Date Analyzed
ICP METALS						
EPA 3050B			**EPA 6010B**			
RunID: ICP8_100706C	QC Batch: 65194				PrepDate: 7/6/2010	Analyst: **SRB**
Lead	4.7	2.0		mg/Kg	1	7/7/2010 11:56 AM

Lab ID: 112524-008 **Collection Date:** 6/30/2010 11:51:00 AM
Client Sample ID: 0077-P1 **Matrix:** PAINT CHIPS

Analyses	Result	PQL	Qual	Units	DF	Date Analyzed
ICP METALS						
EPA 3050B			**EPA 6010B**			
RunID: ICP8_100706C	QC Batch: 65194				PrepDate: 7/6/2010	Analyst: **SRB**
Lead	150	4.0		mg/Kg	2	7/7/2010 12:01 PM

Qualifiers:

B	Analyte detected in the associated Method Blank	E	Value above quantitation range
H	Holding times for preparation or analysis exceeded	ND	Not Detected at the Reporting Limit
S	Spike/Surrogate outside of limits due to matrix interference		Results are wet unless otherwise specified
DO	Surrogate Diluted Out		

Advanced Technology Laboratories
3275 Walnut Avenue, Signal Hill, CA 90755 Tel: 562. 989.4045 Fax: 562.989.4040

Advanced Technology Laboratories

ANALYTICAL RESULTS

Print Date: *09-Jul-10*

CLIENT: Geocon Consultants, Inc.
Project: PLACER CO. BRIDGES, S9300-06-134

Lab Order: 112524

Lab ID: 112524-009
Client Sample ID: 0077-P2

Collection Date: 6/30/2010 11:59:00 AM
Matrix: PAINT CHIPS

Analyses	Result	PQL	Qual	Units	DF	Date Analyzed
ICP METALS						
	EPA 3050B			**EPA 6010B**		
RunID: ICP8_100706C	QC Batch: 65194				PrepDate: 7/6/2010	Analyst: **SRB**
Lead	4.9	2.0		mg/Kg	1	7/7/2010 12:06 PM

Qualifiers:

B	Analyte detected in the associated Method Blank	E	Value above quantitation range
H	Holding times for preparation or analysis exceeded	ND	Not Detected at the Reporting Limit
S	Spike/Surrogate outside of limits due to matrix interference		Results are wet unless otherwise specified
DO	Surrogate Diluted Out		

Advanced Technology Laboratories
3275 Walnut Avenue, Signal Hill, CA 90755 Tel: 562. 989.4045 Fax: 562.989.4040

CLIENT: Geocon Consultants, Inc.
Work Order: 112524
Project: PLACER CO. BRIDGES, S9300-06-134

ANALYTICAL QC SUMMARY REPORT

TestCode: 6010_S

Sample ID: **MB-65194** SampType: **MBLK** TestCode: **6010_S** Units: **mg/Kg** Prep Date: **7/6/2010** RunNo: **122815**
Client ID: **PBS** Batch ID: **65194** TestNo: **EPA 6010B** **EPA 3050B** Analysis Date: **7/6/2010** SeqNo: **1967291**

Analyte	Result	PQL	SPK value	SPK Ref Val	%REC	LowLimit	HighLimit	RPD Ref Val	%RPD	RPDLimit	Qual
Lead	0.378	1.0									

Sample ID: **LCS-65194** SampType: **LCS** TestCode: **6010_S** Units: **mg/Kg** Prep Date: **7/6/2010** RunNo: **122815**
Client ID: **LCSS** Batch ID: **65194** TestNo: **EPA 6010B** **EPA 3050B** Analysis Date: **7/6/2010** SeqNo: **1967292**

Analyte	Result	PQL	SPK value	SPK Ref Val	%REC	LowLimit	HighLimit	RPD Ref Val	%RPD	RPDLimit	Qual
Lead	46.970	1.0	50.00	0.3780	93.2	80	120				

Sample ID: **112508-001A-DUP** SampType: **DUP** TestCode: **6010_S** Units: **mg/Kg** Prep Date: **7/6/2010** RunNo: **122815**
Client ID: **ZZZZZZ** Batch ID: **65194** TestNo: **EPA 6010B** **EPA 3050B** Analysis Date: **7/6/2010** SeqNo: **1967294**

Analyte	Result	PQL	SPK value	SPK Ref Val	%REC	LowLimit	HighLimit	RPD Ref Val	%RPD	RPDLimit	Qual
Lead	2.132	1.0						2.187	2.54	20	

Sample ID: **112508-001A-MS** SampType: **MS** TestCode: **6010_S** Units: **mg/Kg** Prep Date: **7/6/2010** RunNo: **122815**
Client ID: **ZZZZZZ** Batch ID: **65194** TestNo: **EPA 6010B** **EPA 3050B** Analysis Date: **7/6/2010** SeqNo: **1967295**

Analyte	Result	PQL	SPK value	SPK Ref Val	%REC	LowLimit	HighLimit	RPD Ref Val	%RPD	RPDLimit	Qual
Lead	100.168	1.0	125.0	2.187	78.4	34	126				

Sample ID: **112508-001A-MSD** SampType: **MSD** TestCode: **6010_S** Units: **mg/Kg** Prep Date: **7/6/2010** RunNo: **122815**
Client ID: **ZZZZZZ** Batch ID: **65194** TestNo: **EPA 6010B** **EPA 3050B** Analysis Date: **7/6/2010** SeqNo: **1967296**

Analyte	Result	PQL	SPK value	SPK Ref Val	%REC	LowLimit	HighLimit	RPD Ref Val	%RPD	RPDLimit	Qual
Lead	99.692	1.0	125.0	2.187	78.0	34	126	100.2	0.476	20	

Qualifiers:

B	Analyte detected in the associated Method Blank	E	Value above quantitation range	H	Holding times for preparation or analysis exceeded
ND	Not Detected at the Reporting Limit	R	RPD outside accepted recovery limits	S	Spike/Surrogate outside of limits due to matrix interference
DO	Surrogate Diluted Out		Calculations are based on raw values		

CHAIN OF CUSTODY RECORD

Advanced Technology Laboratories
3275 Walnut Avenue
Signal Hill, CA 90755
(562) 989-4045 • Fax (562) 989-4040

FOR LABORATORY USE ONLY:

P.O.#:

Logged By: Date: 7/1/10

Method of Transport: Client ☐ ATL ☐ CA OverN ☐ FEDEX ☐ Other: UPS

Sample Condition Upon Receipt (22.6)
1. CHILLED Y☐ N☑ 4. SEALED Y☐ N☑
2. HEADSPACE (VOA) Y☐ N☐ (NA) 5. # OF SPLS MATCH COC Y☑ N☐
3. CONTAINER INTACT Y☑ N☐ 6. PRESERVED Y☐ N☑

Client: GEOCON
Attn: D. WATTS
Address: 6671 BRISA St.
City LIVERMORE State CA Zip Code 94550
TEL: (925) 371-5900
FAX: (") " -5915

Project Name: PLACER Co. BRIDGES Project #: 59300-06-134 Sampler: (Printed Name) D. WATTS (Signature) [signature]

Relinquished by: (Signature and Printed Name)	Date	Time	Received by: (Signature and Printed Name)	Date	Time
[signature]	6/30/10	1615	UPS	6/30/10	1615
			[signature]	7/1/10	945

I hereby authorize ATL to perform the work indicated below:
Project Mgr/Submitter: D. WATTS 6/30/10
Print Name Date
[signature]
Signature

Send Report To:
Attn:
Co: SEE "CLIENT"
Address
City State Zip

Bill To:
Attn:
Co:
Address
City State Zip

Special Instructions/Comments:
PAINT CHIPS
ANTICIPATE SOLUBLE REQUESTS

Sample/Records - Archival & Disposal
Unless otherwise requested by client, all samples will be disposed 45 days after receipt and records will be disposed 1 year after submittal of final report.

Storage Fees (applies when storage is requested):
- Sample : $2.00 / sample / mo (after 45 days)
- Records : $1.00 / ATL workorder / mo (after 1 year)

Circle or Add Analysis(es) Requested

ITEM	LAB USE ONLY: Batch #: / Lab No.	Sample Description: Sample I.D. / Location	Date	Time	8081A (Pesticides)	8082 (PCB)	8260B (Volatiles)	8270C (BNA)	6010B (Total Metal) - Pb	8015B (GRO) / 8020 (BTEX)	8015B (DRO)	8021 (BTEX)	TITLE 22 / CAM 17 (6010 / 7000)	SOIL	WATER	GROUND WATER	WASTEWATER	PAINT CHIPS	TAT	Container(s) #	Container(s) Type	PRESERVATION	REMARKS
	112524-001	0083 - P1	6/29/10	0800				X										X	5-Day	1	Bag P		
	2	- P2																					
	3	0038 - P1		1017																			
	4	0099 - P1	6/30/10	0811																			
	5	- P2		0819																			
	6	- P3		0851																			
	7	0150 - P1	6/30/10	1114																			
	8	0077 - P1		1151																			
	9	- P2		1159																			

SPECIFY APPROPRIATE MATRIX

Q A / Q C: RTNE ☐ CT ☒ SWRCB ☐ Logcode ____ OTHER ____

• TAT starts 8 a.m. following day if samples received after 3 p.m.

TAT: A= Overnight ≤ 24 hr B= Emergency Next workday C= Critical 2 Workdays D= Urgent 3 Workdays E= Routine 7 Workdays

Container Types: T=Tube V=VOA L=Liter P=Pint J=Jar B=Tedlar G=Glass P=Plastic M=Metal

Preservatives: H=Hcl N=HNO_3 S=H_2SO_4 C=4°C Z=$Zn(AC)_2$ O=NaOH T=$Na_2S_2O_3$

DISTRIBUTION: White with report Yellow to folder Pink to submitter

July 19, 2010

ELAP No.: 1838
NELAP No.: 02107CA
NEVADA.: CA-401
CSDLAC No.: 10196

Workorder No.: 112524

Dave Watts
Geocon Consultants, Inc.
6671 Brisa Street
Livermore, CA 94550

TEL: (925) 371-5900
FAX: (925) 371-5915

RE: PLACER CO. BRIDGES, S9300-06-134

Attention: Dave Watts

Enclosed are the results for sample(s) received on July 01, 2010 by Advanced Technology Laboratories . The sample(s) are tested for the parameters as indicated in the enclosed chain of custody in accordance with the applicable laboratory certifications.

This is an addendum report. Please incorporate with documentation previously submitted.

Thank you for the opportunity to service the needs of your company.

Please feel free to call me at (562)989-4045 if I can be of further assistance to your company.

Sincerely,

Eddie F. Rodriguez
Laboratory Director

The cover letter is an integral part of this analytical report. This Laboratory Report cannot be reproduced in part or in its entirety without written permission from the client and Advanced Technology Laboratories.

Advanced Technology Laboratories
3275 Walnut Avenue Signal Hill, CA 90755 Tel: 562 989-4045 Fax: 562 989-4040

CLIENT: Geocon Consultants, Inc.
Project: PLACER CO. BRIDGES, S9300-06-134
Lab Order: 112524

CASE NARRATIVE

Analytical Comments for Method 7420

Dilution was necessary for samples 112524-003A and 112524-006A, due to sample matrix.

Advanced Technology Laboratories
3275 Walnut Avenue, Signal Hill, CA 90755 Tel: 562. 989.4045 Fax: 562.989.4040

Advanced Technology Laboratories

Date: 7/19/2010

ANALYTICAL RESULTS

LEAD BY ATOMIC ABSORPTION (STLC)
WET/ EPA 7420

CLIENT:	Geocon Consultants, Inc.	**Lab Order:**	112524
Project:	PLACER CO. BRIDGES, S9300-06-134	**Date Received**	7/1/2010 9:45:00 AM
Project No:		**Matrix:**	Paint Chips
Analyte:	Lead	**Analyst:**	IL

Laboratory ID	Client Sample ID	Results	Units	QC Batch	PQL	DF	Date Collected	Date Analyzed
112524-008A	0077-P1	8.6	mg/L	65354	0.25	1	6/30/2010	7/15/2010

Qualifiers:

B	Analyte detected in the associated Method Blank	E	Value above quantitation range
H	Holding times for preparation or analysis exceeded	ND	Not Detected at the Reporting Limit
S	Spike/Surrogate outside of limits due to matrix interference		Results are wet unless otherwise specified
DO	Surrogate Diluted Out		

Advanced Technology Laboratories

3275 Walnut Avenue, Signal Hill, CA 90755 Tel: 562. 989.4045 Fax: 562.989.4040

Advanced Technology Laboratories

Date: 7/19/2010

ANALYTICAL RESULTS

LEAD BY ATOMIC ABSORPTION (TCLP)
EPA 1311/ 7420

CLIENT:	Geocon Consultants, Inc.	**Lab Order:**	112524
Project:	PLACER CO. BRIDGES, S9300-06-134	**Date Received**	7/1/2010 9:45:00 AM
Project No:		**Matrix:**	Paint Chips
Analyte:	Lead	**Analyst:**	IL

Laboratory ID	Client Sample ID	Results	Units	QC Batch	PQL	DF	Date Collected	Date Analyzed
112524-002A	0083-P2	1.0	mg/L	65519	0.25	1	6/29/2010	7/16/2010
112524-003A	0038-P1	67	mg/L	65519	2.5	2	6/29/2010	7/16/2010
112524-005A	0099-P2	3.2	mg/L	65519	0.25	1	6/30/2010	7/16/2010
112524-006A	0099-P3	58	mg/L	65519	2.5	10	6/30/2010	7/16/2010

Qualifiers:

B	Analyte detected in the associated Method Blank	E	Value above quantitation range
H	Holding times for preparation or analysis exceeded	ND	Not Detected at the Reporting Limit
S	Spike/Surrogate outside of limits due to matrix interference		Results are wet unless otherwise specified
DO	Surrogate Diluted Out		

Advanced Technology Laboratories

3275 Walnut Avenue, Signal Hill, CA 90755 Tel: 562. 989.4045 Fax: 562.989.4040

CLIENT: Geocon Consultants, Inc.
Work Order: 112524
Project: PLACER CO. BRIDGES, S9300-06-134

ANALYTICAL QC SUMMARY REPORT

TestCode: 7420_ST

Sample ID: **MB-65354A** SampType: **MBLK** TestCode: **7420_ST** Units: **mg/L** Prep Date: **7/13/2010** RunNo: **123172**
Client ID: **PBS** Batch ID: **65354** TestNo: **WET/ EPA 74 WET** Analysis Date: **7/15/2010** SeqNo: **1974249**

Analyte	Result	PQL	SPK value	SPK Ref Val	%REC	LowLimit	HighLimit	RPD Ref Val	%RPD	RPDLimit	Qual
Lead	ND	0.25									

Sample ID: **LCS-65354** SampType: **LCS** TestCode: **7420_ST** Units: **mg/L** Prep Date: **7/13/2010** RunNo: **123172**
Client ID: **LCSS** Batch ID: **65354** TestNo: **WET/ EPA 74 WET** Analysis Date: **7/15/2010** SeqNo: **1974250**

Analyte	Result	PQL	SPK value	SPK Ref Val	%REC	LowLimit	HighLimit	RPD Ref Val	%RPD	RPDLimit	Qual
Lead	4.899	0.25	5.000	0	98.0	80	120				

Sample ID: **112525-017A-DUP** SampType: **DUP** TestCode: **7420_ST** Units: **mg/L** Prep Date: **7/13/2010** RunNo: **123172**
Client ID: **ZZZZZZ** Batch ID: **65354** TestNo: **WET/ EPA 74 WET** Analysis Date: **7/15/2010** SeqNo: **1974260**

Analyte	Result	PQL	SPK value	SPK Ref Val	%REC	LowLimit	HighLimit	RPD Ref Val	%RPD	RPDLimit	Qual
Lead	2.816	0.25						2.789	0.973	20	

Sample ID: **112525-017A-MS** SampType: **MS** TestCode: **7420_ST** Units: **mg/L** Prep Date: **7/13/2010** RunNo: **123172**
Client ID: **ZZZZZZ** Batch ID: **65354** TestNo: **WET/ EPA 74 WET** Analysis Date: **7/15/2010** SeqNo: **1974261**

Analyte	Result	PQL	SPK value	SPK Ref Val	%REC	LowLimit	HighLimit	RPD Ref Val	%RPD	RPDLimit	Qual
Lead	7.494	0.25	5.000	2.789	94.1	80	120				

Sample ID: **MB-65354B** SampType: **MBLK** TestCode: **7420_ST** Units: **mg/L** Prep Date: **7/13/2010** RunNo: **123172**
Client ID: **PBS** Batch ID: **65354** TestNo: **WET/ EPA 74 WET** Analysis Date: **7/15/2010** SeqNo: **1974262**

Analyte	Result	PQL	SPK value	SPK Ref Val	%REC	LowLimit	HighLimit	RPD Ref Val	%RPD	RPDLimit	Qual
Lead	ND	0.25									

Qualifiers:

B	Analyte detected in the associated Method Blank	E	Value above quantitation range	H	Holding times for preparation or analysis exceeded
ND	Not Detected at the Reporting Limit	R	RPD outside accepted recovery limits	S	Spike/Surrogate outside of limits due to matrix interference
DO	Surrogate Diluted Out		Calculations are based on raw values		

CLIENT: Geocon Consultants, Inc.
Work Order: 112524
Project: PLACER CO. BRIDGES, S9300-06-134

ANALYTICAL QC SUMMARY REPORT

TestCode: 7420_ST

Sample ID: **112543-006A-DUP** SampType: **DUP** TestCode: **7420_ST** Units: **mg/L** Prep Date: **7/13/2010** RunNo: **123172**
Client ID: **ZZZZZZ** Batch ID: **65354** TestNo: **WET/ EPA 74 WET** Analysis Date: **7/15/2010** SeqNo: **1974273**

Analyte	Result	PQL	SPK value	SPK Ref Val	%REC	LowLimit	HighLimit	RPD Ref Val	%RPD	RPDLimit	Qual
Lead	3.380	0.25						3.379	0.0271	20	

Sample ID: **112543-006A-MS** SampType: **MS** TestCode: **7420_ST** Units: **mg/L** Prep Date: **7/13/2010** RunNo: **123172**
Client ID: **ZZZZZZ** Batch ID: **65354** TestNo: **WET/ EPA 74 WET** Analysis Date: **7/15/2010** SeqNo: **1974274**

Analyte	Result	PQL	SPK value	SPK Ref Val	%REC	LowLimit	HighLimit	RPD Ref Val	%RPD	RPDLimit	Qual
Lead	8.058	0.25	5.000	3.379	93.6	80	120				

Sample ID: **112543-006A-MSD** SampType: **MSD** TestCode: **7420_ST** Units: **mg/L** Prep Date: **7/13/2010** RunNo: **123172**
Client ID: **ZZZZZZ** Batch ID: **65354** TestNo: **WET/ EPA 74 WET** Analysis Date: **7/15/2010** SeqNo: **1974275**

Analyte	Result	PQL	SPK value	SPK Ref Val	%REC	LowLimit	HighLimit	RPD Ref Val	%RPD	RPDLimit	Qual
Lead	8.102	0.25	5.000	3.379	94.5	80	120	8.058	0.542	20	

Qualifiers:

B	Analyte detected in the associated Method Blank	E	Value above quantitation range	H	Holding times for preparation or analysis exceeded
ND	Not Detected at the Reporting Limit	R	RPD outside accepted recovery limits	S	Spike/Surrogate outside of limits due to matrix interference
DO	Surrogate Diluted Out		Calculations are based on raw values		

Advanced Technology Laboratories
3275 Walnut Avenue, Signal Hill, CA 90755 Tel: 562. 989.4045 Fax: 562.989.4040

CLIENT: Geocon Consultants, Inc.
Work Order: 112524
Project: PLACER CO. BRIDGES, S9300-06-134

ANALYTICAL QC SUMMARY REPORT

TestCode: 7420_TC

Sample ID: **MB-65519A** SampType: **MBLK** TestCode: **7420_TC** Units: **mg/L** Prep Date: **7/16/2010** RunNo: **123208**
Client ID: **PBS** Batch ID: **65519** TestNo: **EPA 1311/ 74 EPA3010A** Analysis Date: **7/16/2010** SeqNo: **1975090**

Analyte	Result	PQL	SPK value	SPK Ref Val	%REC	LowLimit	HighLimit	RPD Ref Val	%RPD	RPDLimit	Qual
Lead	ND	0.25									

Sample ID: **MB-65514A TCLP** SampType: **MBLK** TestCode: **7420_TC** Units: **mg/L** Prep Date: **7/16/2010** RunNo: **123208**
Client ID: **PBS** Batch ID: **65519** TestNo: **EPA 1311/ 74 EPA3010A** Analysis Date: **7/16/2010** SeqNo: **1975091**

Analyte	Result	PQL	SPK value	SPK Ref Val	%REC	LowLimit	HighLimit	RPD Ref Val	%RPD	RPDLimit	Qual
Lead	ND	0.25									

Sample ID: **LCS-65519** SampType: **LCS** TestCode: **7420_TC** Units: **mg/L** Prep Date: **7/16/2010** RunNo: **123208**
Client ID: **LCSS** Batch ID: **65519** TestNo: **EPA 1311/ 74 EPA3010A** Analysis Date: **7/16/2010** SeqNo: **1975092**

Analyte	Result	PQL	SPK value	SPK Ref Val	%REC	LowLimit	HighLimit	RPD Ref Val	%RPD	RPDLimit	Qual
Lead	1.022	0.25	1.000	0	102	80	120				

Sample ID: **112508-001A-DUP** SampType: **DUP** TestCode: **7420_TC** Units: **mg/L** Prep Date: **7/16/2010** RunNo: **123208**
Client ID: **ZZZZZZ** Batch ID: **65519** TestNo: **EPA 1311/ 74 EPA3010A** Analysis Date: **7/16/2010** SeqNo: **1975094**

Analyte	Result	PQL	SPK value	SPK Ref Val	%REC	LowLimit	HighLimit	RPD Ref Val	%RPD	RPDLimit	Qual
Lead	ND	0.25						0	0	20	

Sample ID: **112508-001A-MS** SampType: **MS** TestCode: **7420_TC** Units: **mg/L** Prep Date: **7/16/2010** RunNo: **123208**
Client ID: **ZZZZZZ** Batch ID: **65519** TestNo: **EPA 1311/ 74 EPA3010A** Analysis Date: **7/16/2010** SeqNo: **1975095**

Analyte	Result	PQL	SPK value	SPK Ref Val	%REC	LowLimit	HighLimit	RPD Ref Val	%RPD	RPDLimit	Qual
Lead	2.360	0.25	2.500	0	94.4	70	130				

Qualifiers:

B	Analyte detected in the associated Method Blank	E	Value above quantitation range	H	Holding times for preparation or analysis exceeded
ND	Not Detected at the Reporting Limit	R	RPD outside accepted recovery limits	S	Spike/Surrogate outside of limits due to matrix interference
DO	Surrogate Diluted Out		Calculations are based on raw values		

Advanced Technology Laboratories
3275 Walnut Avenue, Signal Hill, CA 90755 Tel: 562. 989.4045 Fax: 562.989.4040

CLIENT: Geocon Consultants, Inc.
Work Order: 112524
Project: PLACER CO. BRIDGES, S9300-06-134

ANALYTICAL QC SUMMARY REPORT

TestCode: 7420_TC

Sample ID: **112670-001E-DUP** SampType: **DUP** TestCode: **7420_TC** Units: **mg/L** Prep Date: **7/16/2010** RunNo: **123208**
Client ID: **ZZZZZZ** Batch ID: **65519** TestNo: **EPA 1311/ 74 EPA3010A** Analysis Date: **7/16/2010** SeqNo: **1975101**

Analyte	Result	PQL	SPK value	SPK Ref Val	%REC	LowLimit	HighLimit	RPD Ref Val	%RPD	RPDLimit	Qual
Lead	ND	0.25						0	0	20	

Sample ID: **112670-001E-MS** SampType: **MS** TestCode: **7420_TC** Units: **mg/L** Prep Date: **7/16/2010** RunNo: **123208**
Client ID: **ZZZZZZ** Batch ID: **65519** TestNo: **EPA 1311/ 74 EPA3010A** Analysis Date: **7/16/2010** SeqNo: **1975102**

Analyte	Result	PQL	SPK value	SPK Ref Val	%REC	LowLimit	HighLimit	RPD Ref Val	%RPD	RPDLimit	Qual
Lead	2.562	0.25	2.500	0	102	70	130				

Sample ID: **112670-001E-MSD** SampType: **MSD** TestCode: **7420_TC** Units: **mg/L** Prep Date: **7/16/2010** RunNo: **123208**
Client ID: **ZZZZZZ** Batch ID: **65519** TestNo: **EPA 1311/ 74 EPA3010A** Analysis Date: **7/16/2010** SeqNo: **1975103**

Analyte	Result	PQL	SPK value	SPK Ref Val	%REC	LowLimit	HighLimit	RPD Ref Val	%RPD	RPDLimit	Qual
Lead	2.574	0.25	2.500	0	103	70	130	2.562	0.472	20	

Sample ID: **MB-65519B** SampType: **MBLK** TestCode: **7420_TC** Units: **mg/L** Prep Date: **7/16/2010** RunNo: **123208**
Client ID: **PBS** Batch ID: **65519** TestNo: **EPA 1311/ 74 EPA3010A** Analysis Date: **7/16/2010** SeqNo: **1975104**

Analyte	Result	PQL	SPK value	SPK Ref Val	%REC	LowLimit	HighLimit	RPD Ref Val	%RPD	RPDLimit	Qual
Lead	ND	0.25									

Sample ID: **MB-65514B TCLP** SampType: **MBLK** TestCode: **7420_TC** Units: **mg/L** Prep Date: **7/16/2010** RunNo: **123208**
Client ID: **PBS** Batch ID: **65519** TestNo: **EPA 1311/ 74 EPA3010A** Analysis Date: **7/16/2010** SeqNo: **1975105**

Analyte	Result	PQL	SPK value	SPK Ref Val	%REC	LowLimit	HighLimit	RPD Ref Val	%RPD	RPDLimit	Qual
Lead	ND	0.25									

Qualifiers:

B	Analyte detected in the associated Method Blank	E	Value above quantitation range	H	Holding times for preparation or analysis exceeded
ND	Not Detected at the Reporting Limit	R	RPD outside accepted recovery limits	S	Spike/Surrogate outside of limits due to matrix interference
DO	Surrogate Diluted Out		Calculations are based on raw values		

Advanced Technology Laboratories
3275 Walnut Avenue, Signal Hill, CA 90755 Tel: 562. 989.4045 Fax: 562.989.4040

Rachelle Arada

From: Diane Galvan
Sent: Monday, July 12, 2010 8:38 AM
To: Rachelle Arada
Subject: Fw: Results/EDD - PLACER CO. BRIDGES (112524)

Sent via BlackBerry by AT&T

From: "David Watts" <watts@geoconinc.com>
Date: Mon, 12 Jul 2010 04:46:36 -0700
To: 'Diane Galvan'<diane@atlglobal.com>
Subject: RE: Results/EDD - PLACER CO. BRIDGES (112524)

TCLPs on samples that failed TTLC.
WETS on samples with results at or above 50 that did not fail TTLC.
Same TAT as CofC. Thanks.

From: Diane Galvan [mailto:diane@atlglobal.com]
Sent: Friday, July 09, 2010 3:09 PM
To: watts@geoconinc.com
Subject: Results/EDD - PLACER CO. BRIDGES (112524)

Hi Dave,

Here are the results and Excel EDD.

Thanks,

Diane Galvan
Project Coordinator

Advanced Technology Laboratories
www.atlglobal.com
Tel: (562) 989-4045 ext. 238
Fax: (562) 989-4040

Advanced Technology Laboratories is a full-service environmental lab providing organic and inorganic analyses of soil, water, wastewater, storm water and hazardous waste samples. ATL is accredited by the State of California, NELAP and State of Nevada and holds various SBE, DBE and MBE certificates and a USDA soil permit. ATL takes pride in providing our customers with quick turnaround time, excellent customer service and defensible data while offering very competitive rates. *Advanced Technology Labs - Your Partner for Quality Environmental Testing*

This message is intended for the use of the individual or entity to which it is addressed. This may contain information that is privileged, confidential, and exempt from disclosure under applicable law. If the reader of this message is not the intended recipient, or the employee or agent responsible for delivering the message to the intended recipient, you are hereby notified that any dissemination, distribution or copying of this communication is strictly prohibited. If you have received this communication in error, please notify us immediately by telephone and delete the original message. Thank you.

July 26, 2010

ELAP No.: 1838
NELAP No.: 02107CA
NEVADA.: CA-401
CSDLAC No.: 10196

Workorder No.: 112524

Dave Watts
Geocon Consultants, Inc.
6671 Brisa Street
Livermore, CA 94550

TEL: (925) 371-5900
FAX: (925) 371-5915

RE: PLACER CO. BRIDGES, S9300-06-134

Attention: Dave Watts

Enclosed are the results for sample(s) received on July 01, 2010 by Advanced Technology Laboratories . The sample(s) are tested for the parameters as indicated in the enclosed chain of custody in accordance with the applicable laboratory certifications.

This is an addendum report. Please incorporate with documentation previously submitted.

Thank you for the opportunity to service the needs of your company.

Please feel free to call me at (562)989-4045 if I can be of further assistance to your company.

Sincerely,

Eddie F. Rodriguez
Laboratory Director

The cover letter is an integral part of this analytical report. This Laboratory Report cannot be reproduced in part or in its entirety without written permission from the client and Advanced Technology Laboratories.

Advanced Technology Laboratories
3275 Walnut Avenue Signal Hill, CA 90755 Tel: 562 989-4045 Fax: 562 989-4040

Advanced Technology Laboratories

Date: 7/26/2010

ANALYTICAL RESULTS

LEAD BY ATOMIC ABSORPTION (TCLP)
EPA 1311/ 7420

CLIENT:	Geocon Consultants, Inc.	**Lab Order:**	112524
Project:	PLACER CO. BRIDGES, S9300-06-134	**Date Received**	7/1/2010 9:45:00 AM
Project No:		**Matrix:**	Paint Chips
Analyte:	Lead	**Analyst:**	IL

Laboratory ID	Client Sample ID	Results	Units	QC Batch	PQL	DF	Date Collected	Date Analyzed
112524-008A	0077-P1	0.27	mg/L	65856	0.25	1	6/30/2010	7/26/2010

Qualifiers:

B	Analyte detected in the associated Method Blank	E	Value above quantitation range
H	Holding times for preparation or analysis exceeded	ND	Not Detected at the Reporting Limit
S	Spike/Surrogate outside of limits due to matrix interference		Results are wet unless otherwise specified
DO	Surrogate Diluted Out		

Advanced Technology Laboratories

3275 Walnut Avenue, Signal Hill, CA 90755 Tel: 562. 989.4045 Fax: 562.989.4040

CLIENT: Geocon Consultants, Inc.
Work Order: 112524
Project: PLACER CO. BRIDGES, S9300-06-134

ANALYTICAL QC SUMMARY REPORT

TestCode: 7420_TC

Sample ID: **MB-65856A** SampType: **MBLK** TestCode: **7420_TC** Units: **mg/L** Prep Date: **7/26/2010** RunNo: **123650**
Client ID: **PBS** Batch ID: **65856** TestNo: **EPA 1311/ 74 EPA3010A** Analysis Date: **7/26/2010** SeqNo: **1984658**

Analyte	Result	PQL	SPK value	SPK Ref Val	%REC	LowLimit	HighLimit	RPD Ref Val	%RPD	RPDLimit	Qual
Lead	ND	0.25									

Sample ID: **MB-65841A TCLP** SampType: **MBLK** TestCode: **7420_TC** Units: **mg/L** Prep Date: **7/26/2010** RunNo: **123650**
Client ID: **PBS** Batch ID: **65856** TestNo: **EPA 1311/ 74 EPA3010A** Analysis Date: **7/26/2010** SeqNo: **1984659**

Analyte	Result	PQL	SPK value	SPK Ref Val	%REC	LowLimit	HighLimit	RPD Ref Val	%RPD	RPDLimit	Qual
Lead	ND	0.25									

Sample ID: **LCS-65856** SampType: **LCS** TestCode: **7420_TC** Units: **mg/L** Prep Date: **7/26/2010** RunNo: **123650**
Client ID: **LCSS** Batch ID: **65856** TestNo: **EPA 1311/ 74 EPA3010A** Analysis Date: **7/26/2010** SeqNo: **1984660**

Analyte	Result	PQL	SPK value	SPK Ref Val	%REC	LowLimit	HighLimit	RPD Ref Val	%RPD	RPDLimit	Qual
Lead	0.955	0.25	1.000	0	95.5	80	120				

Sample ID: **112525-031A-DUP** SampType: **DUP** TestCode: **7420_TC** Units: **mg/L** Prep Date: **7/26/2010** RunNo: **123650**
Client ID: **ZZZZZZ** Batch ID: **65856** TestNo: **EPA 1311/ 74 EPA3010A** Analysis Date: **7/26/2010** SeqNo: **1984669**

Analyte	Result	PQL	SPK value	SPK Ref Val	%REC	LowLimit	HighLimit	RPD Ref Val	%RPD	RPDLimit	Qual
Lead	ND	0.25						0	0	20	

Sample ID: **112525-031A-MS** SampType: **MS** TestCode: **7420_TC** Units: **mg/L** Prep Date: **7/26/2010** RunNo: **123650**
Client ID: **ZZZZZZ** Batch ID: **65856** TestNo: **EPA 1311/ 74 EPA3010A** Analysis Date: **7/26/2010** SeqNo: **1984670**

Analyte	Result	PQL	SPK value	SPK Ref Val	%REC	LowLimit	HighLimit	RPD Ref Val	%RPD	RPDLimit	Qual
Lead	2.658	0.25	2.500	0	106	70	130				

Qualifiers:

B	Analyte detected in the associated Method Blank	E	Value above quantitation range	H	Holding times for preparation or analysis exceeded
ND	Not Detected at the Reporting Limit	R	RPD outside accepted recovery limits	S	Spike/Surrogate outside of limits due to matrix interference
DO	Surrogate Diluted Out		Calculations are based on raw values		

Advanced Technology Laboratories
3275 Walnut Avenue, Signal Hill, CA 90755 Tel: 562. 989.4045 Fax: 562.989.4040

CLIENT: Geocon Consultants, Inc.
Work Order: 112524
Project: PLACER CO. BRIDGES, S9300-06-134

ANALYTICAL QC SUMMARY REPORT

TestCode: 7420_TC

Sample ID: **112525-031A-MSD** SampType: **MSD** TestCode: **7420_TC** Units: **mg/L** Prep Date: **7/26/2010** RunNo: **123650**
Client ID: **ZZZZZZ** Batch ID: **65856** TestNo: **EPA 1311/ 74 EPA3010A** Analysis Date: **7/26/2010** SeqNo: **1984671**

Analyte	Result	PQL	SPK value	SPK Ref Val	%REC	LowLimit	HighLimit	RPD Ref Val	%RPD	RPDLimit	Qual
Lead	2.686	0.25	2.500	0	107	70	130	2.658	1.03	20	

Qualifiers:

B	Analyte detected in the associated Method Blank	E	Value above quantitation range	H	Holding times for preparation or analysis exceeded
ND	Not Detected at the Reporting Limit	R	RPD outside accepted recovery limits	S	Spike/Surrogate outside of limits due to matrix interference
DO	Surrogate Diluted Out		Calculations are based on raw values		

Advanced Technology Laboratories
3275 Walnut Avenue, Signal Hill, CA 90755 Tel: 562. 989.4045 Fax: 562.989.4040

Diane Galvan

From: David Watts [watts@geoconinc.com]
Sent: Wednesday, July 21, 2010 8:39 AM
To: Diane Galvan
Subject: RE: Additional Results/EDD - PLACER CO. BRIDGES (112524)

TCLP on 0077-P1. 72-hr TAT. Thanks.

Improvement Standards
Standard Specifications
Standard Drawings

September 2010

PCWA

water • energy • stewardship

Table of Contents

Division 1 – General 9

Section 1 General Information 11
- Purpose 11
- How to use these Standards 11
- Incorporation of SCADA System Standards and Guidelines 11
- Use of Pre-qualified SCADA System Integrators 11
- Definitions 11
- Abbreviations List 15
- Facilities Agreements (FA) 17
- Facilities Agreement (FA) Process 17
- Applicant Billing 18
- Approved Plans 18
- Standards 18
- Alternatives to CDPH Standards 18
- Plan Submittal 18
- Pre-Construction Requirements 19
- Inspection 19
- Easements/Rights of Way and Fee Title Property 19
- Encroachment Permits 20
- Warranties and Repairs 20
- Existing Utility Location 20
- Requirement for Applicants 20

Division 2 – Improvement Standards 21

Section 1 Design Criteria for Treated Water Facilities 23
- Intent of Criteria 23
- Water Supply Pressure 23
- Water Usage Rates 23
- Fire Flows 23
- Water Treatment Plants 24
- Wells 24
- Storage Facilities 24
- Pumping Stations 25
- Pressure Reducing Stations 25
- Interconnections with Other Water Purveyors 26
- Telemetry 26
- Corrosion Control 26
- Landscaping 27
- Distribution System 27
- Design Criteria 27
- Hydraulic Analysis 27
- Pipe Material, Allowable Sizes, and Pressure Class Rating 28
- Pipeline Sizing 28

Restrained Pipeline Joints 28
Restrained joints shall be designed at the following locations: 28
Valves 29
Treated Water 29
Raw Water 29
Fire Hydrants 29
Blow-off Valves 29
Water Quality Sampling Stations 30
Air/Vacuum Release Valves 30
Pipeline Layout and Clearances 30
Manifolds 30
Special Separation Requirements 30
Water Service Piping and Metering 31

Section 2 Design Criteria for Raw Water Facilities 33
Intent of Criteria 33
Canal Encasements 33
Sizing 33
Materials of Construction 33
Bends 34
Valves 34
Mitigating Measures 34
Inverted Siphons 35
Road and Other Crossings 35
Telemetry 36
Inlet and Outlet Structures 36
Trash Racks 36
Required Information 36
Hand Rails 36

Section 3 Cross Connection Control 37
Purpose 37
Definitions Pertaining to Cross Connection Control 37
Responsibility 38
Cross Connection Control Requirements 39
General Provisions 39
Where Protection is Required 39
Type of Protection Required 39
Requirements Abbreviations 40
Backflow Prevention Devices 42
Approved Devices 42
Installation 43
Testing and Maintenance 43
Removal 44
User Supervisor 44
Administration Procedures 44
Water System Inspection 44
Customer Notification – Device Installation 45
Annual Testing and Maintenance – Customer Notification 45
Water Service Discontinuance 45

List of Approved Backflow Prevention Device Testers 46

Section 4 Plan Sheet Requirements 47
General 47
Drawing Size and Scale 47
Drafting Standards 47
Title Sheet 47
Title Block 48
Water System Layout Sheet 48
Plan Details 48

Section 5 Surveys, Topographic Mapping, and CAD Drawings 51
General 51
Surveys and Topographic Mapping 51
CAD Drawings 51

Division 3 – Standard Specifications 53

Section 1 Piping and Plumbing 55
General 55
Materials 55
Joints 55
Nuts and Bolts 55
Joint Lubricants 55
Ductile Iron Pipe (DIP) 55
Polyvinyl Chloride (PVC) Pressure Pipe 57
Steel Pipe 58
Concrete Cylinder Pipe (CCP) 58
Mortar-Lined Steel (MLS) Pipe 60
Fusion-Welded High Density Polyethylene (HDPE) Pipe 63
Treated Water Service Piping 63
Valves and Appurtenances 64
Tapping Sleeves/Saddles 67
Tie-in Sleeves and Couplings 68
Flange Gaskets 68
Hydrants 68
Service Saddles 69
Meter Boxes 69
Corporation Stops 69
Pressure Gauges 69
Flexible Couplings 69
Expansion Joints 70
Locating Wire and Tape 70
Water Facility Markers 70
Backflow Devices 70
Inlet and Outlet Structures 71
Trash racks 71
Execution 71
Installation and Testing 71

Section 2 Concrete Work 77

General 77
Materials 77
Suppliers 77
Related Materials 77
Execution 78
Form Work 78
Reinforcing 78
Cleanup and Protection 80
Testing 80

Section 3 Earthwork 83
General 83
References 83
Materials 83
Bedding, Haunching, and Initial Backfill 83
Intermediate Backfill 83
Sand Slurry Backfill 83
Two-Sack Sand Cement Slurry Backfill 84
Four-Sack Sand Cement Slurry Backfill 84
Embankment Construction Material 84
Filter Fabric 84
Trench Plugs 85
Execution 85
Trench Excavation 85
Trench Width 85
Foundation Bedding Treatment 85
Control of Water 85
Trench Bedding, Haunching, and Backfill 86
Trench Compaction 86
Embankment Construction 86

Section 4 Clearing, Grubbing, and Stripping 87
General 87
Clearing 87
Grubbing 87
Stripping 87
Trees and Shrubbery 87
Execution 88
Clearing and Grubbing Limits 88
Disposal of Clearing and Grubbing Debris 88
Areas to be Stripped 88
Disposal of Strippings 88

Section 5 Painting and Coating 89
General 89
Submittals 89
Qualifications 89
Materials 90
General 90
Painting and Coating Systems 90

Execution 94
Surface Preparation 94
Paint Mixing 95
Surfaces Not to Be Coated 95
Field Touch-Up of Shop-Applied Prime Coats 96
Field Touch-Up of Galvanized Coatings 96
Dry Film Thickness Testing 96

Section 6 Boring, Jacking, and Tunneling 97
General 97
Materials 97
Casings 97
Carrier Pipe 99
Execution 99
Jacking and Receiving Pits 99
Grouting 100
Alignment Tolerances 100
Rotary Drilling 100
Casing Installation 100
Casing Fill 101
End Caps 101

Section 7 Corrosion Control 103
General 103
Materials 103
Magnesium Anodes for Buried Metallic Valves 103
Test Stations 104
Impressed Current System for Tanks 104
Execution 106
Cathodic Protection for Valves 106
Cathodic Protection of Pipelines 107
Cathodic Protection of Interior of Steel Water Storage Tanks 107

Section 8 Erosion Control 111
General 111
Materials 111
Execution 111
Preparation 111
Fertilizing and Seeding 111
Applying Straw 111

Section 9 Guniting 113
General 113
References 113
Materials 113
Cement 113
Water 113
Sand 113
Accelerator 113
Fibers 113
Wire Reinforcement 114

Execution 114
Proportioning and Mixing 114
Preparation of Foundation 114
Placement of Gunite 114
Batching and Mixing Temperatures 115
Operation of Pneumatic Equipment 115
Work Stoppages 116
Construction Joints 116
Clean-up and Disposal 116
Repairs to Gunite 116
Quality Control 116

Section 10 Rip Rap & Sacked Concrete 119
General 119
Materials - Rip Rap 119
Execution - Rip Rap 119
Testing 119
Materials - Sacked Concrete 119
Execution - Sacked Concrete 119

Section 11 Cold Weather/Climate Application 121
General 121
Materials 121
Concrete 121
Insulation Blankets 121
LED / LCD Readouts 121
Execution 121
Trenching 121
Concrete Placement in Cold Weather 122

Section 12 Industrial Ornamental Fencing 123
General 123
Work Included 123
System Description 123
References 123
Submittal 123
Product Handling And Storage 123
Materials 123
Fabrication 124
Execution 124
Preparation 124
Installation 124
Table- 1 Coating Performance Requirements 125
Table- 2 Construction Dimension Requirements 125

Appendix A - Facilities Agreement Process 127

Placer County Water Agency Project Plans Checklist 129

Facilities Agreement Process 131
Prior to Beginning 131

Facilities Agreement 131
Construction Phase 133
Project Closeout 133
Setting of Meters 134

Appendix B - Encroachment Permit Sample Document 135

Encroachment Permit Sample Document 137

Appendix C - Easement Submittal Information 139

Summary of California Recording Laws 141
General 141
Guidelines For Preparation Of New Forms 141

Standard Grant of Easement Form 143
Encroachment by Grantor 144
Assignment 144
Signatory Page – Grant of Easement 144

Appendix D - Pre-approved Products List 146

Pre-approved Products List 148

Index 156

Division 4 - Standard Drawings 164

Standard Drawings List 165

[This page intentionally left blank.]

Division 1 – General

[This page intentionally left blank.]

SECTION 1
GENERAL INFORMATION

Purpose

The purpose of these Standards is to provide minimum standards for the design and construction of improvements that are to be dedicated to and accepted by the Placer County Water Agency for maintenance and operation.

How to use these Standards

These Standards are organized into four divisions as follows:

Division 1 General – Includes an orientation to the processes involved in and the legal requirements required for development of Agency facilities.

Division 2 Design Standards – Provides design criteria and plan requirements.

Division 3 Standard Specifications – Provides written instructions concerning project requirements and details the level of quality necessary.

Division 4 Standard Drawings – Integrates with the Standard Specifications to provide materials, dimensions, arrangement, and configurations necessary to properly complete work on Agency facilities.

These Standards also include a description of the Facilities Agreement (FA) process, encroachment permit and easement requirements, and the Agency's pre-approved products list, which contains all the named products the Agency has prequalified.

Finally, the index can help locate references in these Standards.

Incorporation of SCADA System Standards and Guidelines

The Agency also has written SCADA System Standards and Guidelines. These are provided in a three volume document that includes Standard Applications and Guidelines, SCADA and PLC Applications Programming, and Standard Specifications Drawings. The SCADA System Standards and Guidelines are incorporated into these Standards by reference; contact the Agency for instructions to obtain this referenced document.

Use of Pre-qualified SCADA System Integrators

The Agency allows only the use of pre-qualified System Integrators for services, manufacturing, and installation of SCADA systems. Contact the Agency for a current list of pre-qualified SCADA System Integrators.

Definitions

Whenever the following terms or titles are used in these standards or in any document or instrument where these standards govern, the intent and meaning shall be as herein defined:

Acceptance: The formal action by the Agency accepting the work as being complete.

Agency: The Placer County Water Agency (PCWA) or its authorized representative.

Agency Engineer: The Agency's Director of Technical Services or his authorized representative.

Agency Inspector: The person or firm authorized by the Agency to conduct construction review or observation.

Agency's Business Office: 144 Ferguson Road, Auburn, California 95603, tel. (530) 823-4850. Open 8 a.m. – 5 p.m. weekdays.

Agency's Personnel: Employees of Placer County Water Agency.

Agency's Rules and Regulations: (See Rules & Regulations)

Applicant: Any person, firm, partnership, corporation, or combination thereof, legally and financially responsible for the work.

Applicant's Engineer: An engineer licensed to work in the State of California who has been hired by the applicant to work on a project of interest to the Agency.

AWWA: The American Water Works Association.

Backfill: The material placed after a pipeline or other buried appurtenance has been placed.

Bacteriological Testing: Testing conducted after pipeline disinfection in accordance with AWWA C651 using a certified testing laboratory.

Bedding: The material placed in the trench bottom or above a foundation prior to placement of a pipeline or appurtenance.

Calendar Days: Number of days including weekends and holidays.

CalTrans Standards: The California Department of Transportation's current version of its standard specifications and drawings.

Canal Encasement: The process of placing a section of open-channel canal into a pipe, usually to protect it from potential damage or contamination as adjacent areas are developed.

Carrier Pipe: A pipeline within a casing, usually placed without filling the annular space.

Casing Pipe: A pipe sleeve outside of another pipeline, used to protect the inner (Carrier) pipe from overburden pressures, hazardous substances in the soil, or corrosion.

Cold Climate Area: The area East of the Pacific Crest Divide, as per Standard Drawing S501.

Cold Weather: A period of more than three successive days when the mean daily temperature falls below 40°F or any day when the low temperature is expected to fall or falls below freezing (32°F).

Contractor: The individual, partnership, corporation, joint venture, or other combination thereof licensed to perform the work who has entered into a contract with the Developer for construction of the improvements in accordance with Agency's approved Plans and these standards.

County: The County of Placer.

Cross Connection Control: Measures taken to ensure potable water quality in distribution and transmission systems is not harmed by connections to services and other outlets.

Customer Service: Agency personnel who answer questions and provide information and services to builders who add new connections and system improvements. Hours are 8 a.m. – 5 p.m., Monday-Friday, excepting holidays, at (530) 823-4850 inside Placer County, or (800) 464-0030 outside Placer County.

Days: Unless otherwise specified, calendar days.

Developer: The applicant or authorized representative.

Development or Improvement Standards: The most current version of the Agency's Improvement Standards.

Distribution Pipe: An Agency pipeline up to and including 18 inches in diameter that can be tapped for services anywhere along its length.

Encasement: See Canal Encasement.

ERT: A device that sends meter readings to Agency personnel at a distance. (The acronym stands for "electronic receiver/transmitter.")

Facilities: Agency-owned and-operated infrastructure intended to supply, treat, or distribute water to its customers or support the process of doing so.

Facilities Agreement: A contract between the Agency and an Applicant that provides the means for the Agency to take over ownership and operation of the Facilities constructed by the Applicant per Agency standards and with Agency approval.

Field Service: Maintenance and repair of Facilities by trained and experienced Agency personnel.

Final Backfill: Material placed above the intermediate backfill to at least six inches below final grade in an unpaved area.

Fire Flow: The flow of water required to supply fire-suppression water to any point in the Agency system.

Gravity Piping: Pipeline constructed to carry water that flows entirely under the influence of gravity.

Haunching: Material placed from the top of the bedding to the springline of the pipe unless otherwise shown.

Improvement Standards: Document defining the minimum Agency requirements for constructing Facilities.

Initial Backfill: Material placed from the springline of the pipe to 12 inches above the pipe crown unless otherwise shown.

Intermediate Backfill: Material placed from the top of the initial backfill to the road subgrade or to the final backfill.

Joint Harness: A mechanical means of restraining pipes at pipe joints external to the pipe structure.

Large Meter: Any meter larger than 1.0 inches in nominal diameter.

Max Day Demand: The greatest total potable water quantity required during a single day.

Outage: A period in which a portion of the Agency distribution or transmission system cannot deliver water to its customers.

Peak Day Demand: The greatest potable water flow rate required during a single day, averaged throughout that 24-hour period.

Peak Hour Demand: The greatest potable water flow rate required during a single hour, averaged throughout that hour.

Permittee: Party that holds or is applying for an Agency encroachment permit.

Plans: The drawings or reproductions thereof showing the location, character, dimensions, and details of the work to be done.

Potable Water: Water treated for human consumption.

Private Facility: Pipeline, appurtenances, and other improvements on the service side of a meter or as shown in the Standard Drawings.

Raw Water: Non-potable water gathered in primarily gravity-fed systems like canals and gravity piping for irrigation, power generation, or treatment to produce potable water.

Rules and Regulations (Agency): The most current version of the Agency's "Rules, Regulations, Rates and Charges Governing the Distribution and Use of Water" (A copy of the current addition may be obtained at the Customer Service counter located at 144 Ferguson Rd. Auburn, CA.

Standards: Documents defining minimum levels of competence, workmanship, or materials written by an Agency-recognized authority.

Standard Drawings: The most current version of the Agency's Standard Drawings.

State: The State of California.

Subcontractor: An individual, partnership, corporation, joint venture, or other combination thereof who has entered into a contract with the Contractor to perform any of the work. Subcontractor also means an individual, partnership, corporation, joint venture, or other combination thereof who has entered into a contract with another subcontractor to perform any of the work.

Technical Specifications: The most current version of the Agency's Standard Specifications.

Test Pressure: The test pressure (in psi) a pipeline and its appurtenances is subjected to for Agency acceptance.

Tie-In: A connection to a pipeline in the Agency's distribution or transmission system.

Transmission Pipe: Any Agency pipeline 24 in. or larger in diameter, usually with no or very few service taps.

Treated Water: Potable water distributed throughout pressurized transmission and distribution mains.

Work: Any and all obligations, duties, and responsibilities necessary to complete the construction assigned to, or undertaken by, the Contractor pursuant to these Standards including all labor necessary to produce such construction and all materials, equipment, and supplies incorporated or to be incorporated in the construction. Also, the completed construction or parts thereof required to be provided under the Contract Documents.

Working Days: All days except Saturdays, Sundays, and Agency legal holidays.

Working Hours: For inspection purposes, working hours shall be 7:00 a.m. to 3:30 p.m. Monday through Friday except for Agency legal holidays.

Working Pressure: Maximum static pressure plus the surge pressure due to a one foot per second change in velocity pressure (maximum static pressure plus 50 psi minimum) unless otherwise specified.

Abbreviations List

AASHTO	American Association of State Highway and Transportation Officials
AC	Asphaltic Concrete, or Alternating Current
ACI	American Concrete Institute
ACI 306	American Concrete Institute cold weather placement specifications
ACI 506	American Concrete Institute Equipment & Crew Requirements
AG	Air Gap
AGENCY	Placer County Water Agency
ANSI	American National Standards Institute
ANSI BI	American Society for Testing and Materials Bi-national standard
APA	American Plywood Association, Engineers Wood Association
AQMD	Air Quality Management District
ASA	Was American Standards Association & changed to ANSI (See above)
ASME	American Society of Mechanical Engineers
ASTM	American Society for Testing and Materials
ATS	Anode Test Station
AVRV	Air/Vacuum Release Valve
AWG	American Wire Gauge
AWWA	American Water Works Association
BOV	Blow-off Valve
BPD	Backflow Prevention Device
Cal-OSHA	California – Occupational Safety and Health Administration
CARB	California Environmental Protection Agency, Air Resources Board
CDPH	California Department of Public Health
CCML	Concrete Coated Mortar Lined
CCP	Concrete Cylinder Pipe
CCW	Counter Clockwise
CIP	Cast In Place or Cast Iron Pipe
CP-Test	Cathodic Protection
CPVC	Chlorinated Poly Vinyl Chloride
CW	ClockWise
CWO	Cold Weather Only
DC	Double Check valve assembly
DCDA	Double Check Detector Assembly

DHS	Formally "**Department of Public Health**", Changed to "Department of Public Health" (see below)"
DIP	**D**uctile **I**ron **P**ipe
DPH	California **D**epartment of **P**ublic **H**ealth"
DR	**D**iameter **R**atio
EBAA	**E**arl **B**radley **&** **A**ssociates Iron Restraint MFG
ERT	**E**lectronic **R**eceiver/**T**ransmitter
FA	**F**acilities **A**greement
FRP	**F**iberglass **R**einforced Thermosetting **P**lastic
GPS	**G**lobal **P**ositioning **S**ystem
HDPE	**H**igh **D**ensity **P**olyethylene pipe
HWMPE	Insulation Material Designation
HZ	**H**ertz
IPS	**I**ron **P**ipe **S**ize
IR drop	Free of voltage drop across the circuit
LCD	**L**iquid **C**rystal **D**isplays
LED	**L**ight **E**mitting **D**iode
MLS	**M**ortar-**L**ined **S**teel pipe
MSDS	**M**aterial **S**afety Data **S**heets
NACE	**N**ational **A**ssociation of **C**orrosion **E**ngineers
NACE RP	**N**ational **A**ssociation of **C**orrosion **E**ngineers **R**eference **P**aper
NAD 83	**N**orth **A**merican **D**atum of 1983
NEMA	**N**ational **E**lectrical **M**anufactures **A**ssociation
NGVD 29	**N**ational **G**eodetic **V**ertical **D**atum, 1929
NSF	**N**ational **S**cience **F**oundation
OS&Y	**O**utside **S**tem **&** **Y**olk
OSHA	**O**ccupational **S**afety and **H**ealth **A**dministration
PCC	**P**ortland **C**ement **C**oncrete
PCWA	**P**lacer **C**ounty **W**ater **A**gency
PE	**P**olyethylene
PE3408	PPI **P**olyethylene pipe classification, meets ASTM D3350
PPI	**P**lastic **P**ipe **I**nstitute
PSI	**P**ounds **P**er **S**quare **I**nch
PVC	**P**olyvinyl **C**hloride pressure pipe
PWS	**P**ublic **W**ater **S**ystem
RP	**R**educed **P**ressure principle device

RPDA	**R**educed **P**ressure principle **D**etector **A**ssembly
RW	**R**aw **W**ater pipeline or Wire color designation (**R**=black insulation)
SCADA	**S**upervisory **C**ontrol **a**nd **D**ata **A**cquisition
SDR	**S**tandard **D**imension **R**atio
SE	**S**and **E**quivalent
SP-XX	**S**urface **P**reparation – (XX=specification #)
SS	**S**tainless **S**teel Pipe
SSPC	**S**teel **S**tructures **P**ainting **C**ouncil
SSPC-**PA**1	**P**aint **A**pplication Specification No. **1**, Shop, Field & Maintenance Painting
THHN	Thermoplastic **H**igh **H**eat-resistant **N**ylon-coated
THWN	Thermoplastic **H**igh **W**ater-resistant **N**ylon-coated
TW	**T**reated **W**ater pipeline or **W**ire color designation (**T** = white insulation)
USE-2	Direct Burial Building Wire Type **USE-2** (EPR_HYP) 600V
USA	**U**nderground **S**ervice **A**lert
W	Welded Wire Mesh **W**ire Diameter (W0.05= 50 thousands Dia.)
WOG	**W**ater, **O**il and **G**as
WWF	**W**elded **W**ire **F**abric

Facilities Agreements (FA)

All Facilities to be accepted for ownership and maintenance by the Agency shall be installed under the provisions of an FA. All physical encroachments to Agency easements, property or facilities are prohibited except when expressly permitted by an Agency Encroachment Permit.

The Facilities Agreement is not fulfilled or completed until the Agency accepts the Facilities.

Prior to Acceptance of the Facilities the Applicant must provide to the Agency:

- All easements and fee title property.
- Two copies of the project parcel or subdivision map.
- A map or list correlating the addresses to each property for the parcels or lots in the project.
- Electronic files of asbuilts conforming to the requirements in Division 2, Section 4, Project Submittals of these Standards.
- Adequate funds in the project account to provide a minimum deposit in the amount required by the Facilities Agreement.

Facilities Agreement (FA) Process

The Agency's map files, for research by the Applicant/Applicant's Engineer, are available at the Agency's Business Office at 144 Ferguson Road in Auburn during normal business hours. A completed Application is to be submitted to Customer Services for PCWA Project Review. Plan submittals will be reviewed by the Agency. After the plans are finalized, the Applicant's/Applicant's Engineer will request a Facilities Agreement to be prepared and placed on an agenda for approval by the Board of Directors of the Placer County Water Agency. Once

approved, copies of the Facilities Agreement will be signed by the Applicant/Applicant's Engineer, fees and charges will be paid, and the Facilities Agreement will then be signed by the Agency. For further detail on the process, refer to Appendix A.

Applicant Billing

The applicant shall be billed and shall pay all costs associated with the proposed Facilities, including costs for plan review, inspection, mapping, clerical support, and engineering review.

Approved Plans

Complete Plans and specifications for all proposed Facilities to be accepted for ownership and maintenance by the Agency shall be submitted to the Agency for review and approval. This approval shall be evidenced by the signature of the Agency Engineer on the title sheet of the Plans prior to beginning any construction of proposed Agency facilities. No work on Agency facilities will be allowed without approval by the Agency Engineer.

Standards

All facilities to be accepted for ownership and maintenance by the Agency shall conform to the latest edition of the Agency's Standards, AWWA Standards and CDPH. The applicant or the applicant's authorized representative shall be responsible for obtaining all necessary information, requirements, specifications, and standards to design and construct the proposed improvements in accordance with these requirements.

Alternatives to CDPH Standards

Proposals to use an alternative to a requirement of the CDPH Standards must demonstrate to the CDPH and the Agency that the proposed alternative will provide the same level of protection to public health and be approved in writing by the CDPH prior to Agency approval of the plans and prior to implementation.

To request approval of an alternative the Applicant's engineer shall submit a letter to the Agency:

- Identifying the location where the alternative will be implemented.
- Explaining the need for the alternative.
- Describing the alternative.
- Stating that the letter is a request to the CDPH for approval of an alternative to the CDPH Standards.

The letter shall be stamped and signed by a California registered civil engineer.

The Agency will submit this letter to the CDPH on behalf or the Applicant. Letters should not be sent directly to the CDPH.

Plan Submittal

Complete Plans and specifications for all proposed improvements shall be submitted to the Agency for approval.

All initial plan submittals shall include the following:

- A completed Application for Project Review. Note: the Applicant identified on this form will be the party identified in the FA as the responsible party.
- Payment of the plan check deposit.
- Three (3) complete sets of improvement Plans prepared in accordance with these requirements.
- A completed Meter Request Form for each meter. Where a subdivision is being developed, one form for all same size lots and meters is adequate.

A completed "Project Plans Checklist". See Appendix A.

Subsequent plan submittals shall consist of two (2) sets of improvement Plans. Incomplete plan submittals shall not be processed and will be returned to the applicant.

After Agency approval of the Plans, two hard copy sets of Plans and one digital copy on CD shall be provided to the Agency.

Pre-Construction Requirements

Prior to beginning construction of any facilities under an FA the following items shall be completed:

Plans shall be approved and signed by the Agency Engineer.

An FA shall be approved and signed by both the Applicant and the Agency.

All necessary deposits and fees shall be paid.

All required performance bonds shall be provided, reviewed by the Agency, and found to comply with the Agency's performance bond requirements.

Proper insurance certificates shall be submitted, reviewed by the Agency, and found to comply with the Agency's insurance requirements.

All required pre-construction easements shall be prepared, submitted to the Agency, reviewed and approved by the Agency.

Any special conditions in the FA that must be met prior to construction are completed.

The Applicant provides to the Agency, AutoCAD files showing all existing and proposed property lines within the project with property lines placed by themselves on one of two layers, "EXISTING PLS", and "PROPOSED PLS".

Inspection

One or more inspectors may be assigned by the Agency Engineer to observe any and/or all the work. The inspector(s) may inspect any part of the work and/or materials and shall have full authority to accept or reject said work and/or materials. Such inspection shall not relieve the Developer and/or Contractor of the obligation to conduct comprehensive inspections of the work, to furnish acceptable materials, perform acceptable work and to provide adequate safety precautions.

The FA Applicant shall be billed and shall pay all Agency inspection costs, including costs for mapping, clerical support, and engineering review for the FA.

Easements/Rights of Way and Fee Title Property

The applicant shall provide the Agency with all necessary property and easements/rights of way for the proposed improvements.

All easements shall be prepared in the Agency's standard easement format and shall include all necessary legal descriptions and plat maps. See Appendix D for the Standard Grant of Easement form and a sample exhibit.

All easements and deeds will go through an escrow officer and be recorded by the escrow officer with a title company selected and approved by the Agency.

Construction of buildings and/or structures shall not be permitted within the Agency's easements.

The minimum easement width for pipelines shall be 20 feet. Easement widths greater than 20 feet may be required at the Agency's discretion.

Fee title to property shall be provided for all major above ground facilities and structures such as storage tanks, pumping stations, pressure reducing valve stations, water treatment facilities, or other facilities as determined by the Agency. When fee title to property is to be provided, it shall

be sized sufficient that the Agency is able to adequately conduct all functions for which the property is intended and allow fencing.

Encroachment Permits

The Agency prohibits use of right of ways, easements, canals, and canal banks for planting trees, vines, or other crops, and prohibits construction of fences, pipes, bridges, crossings, or other structures.

At the Agency's sole discretion, Encroachment Permits may be issued that allow an encroachment, subject to conditions, terms and provisions included in the permit. If the permittee fails to uphold those conditions, terms and provisions the Agency may terminate the Encroachment Permit.

Applications for Encroachment Permits are handled using the Facilities Agreement procedure.

Warranties and Repairs

The Applicant shall warranty all materials and workmanship provided under a Facilities Agreement for a period of one year after the date of acceptance of the facilities. The Applicant shall be fully responsible for all direct and indirect damages and expenses to the Agency caused by such defects in materials and workmanship including defects in materials and workmanship supplied to the Applicant's Contractor by any subcontractor or manufacturer of equipment.

Existing Utility Location

For location of existing waterlines, appurtenances and other utilities, the Applicant and/or Contractor shall notify U.S.A. (Underground Service Alert) 48 hours before performing excavation. Not all utilities participate in U.S.A., and procedures for determining existing utilities vary by location. Proper utility location is the Applicant/Contractor's responsibility. The location of existing utilities on Agency documents is based on information from others and is considered approximate.

Requirement for Applicants

At the end of the project construction, the Consulting Engineer shall submit one set of Record Drawings. Record Drawings are to show (any and all) PCWA Project Engineer approved changes and those changes approved by any other Authority that were made after the bid process. Copies of field records and drawing revisions will be provided to the Consultant by the Agency after completion of construction. These changes are to be clouded and shown as revisions to the plans, each revision shall be noted on the affected sheet only, and then all revisions with pages affected shall be listed on the cover sheet. The set of record drawings must be the originals showing the Engineer's original wet stamp and signature, PCWA's Project Engineer's approval block with signature and if applicable, Placer County's original approval signatures and initials on each sheet.

Division 2 – Improvement Standards

[This page intentionally left blank.]

SECTION 1
DESIGN CRITERIA FOR TREATED WATER FACILITIES

Intent of Criteria

The intent of these criteria is to provide a treated water system that will:

Be free of sanitary hazards.

Protect the quality of the water delivered to users at all times.

Protect the distribution system against backflow contamination.

Be adequately sized to provide water treatment, transmission, storage, and distribution capacity.

Be structurally sound and withstand, with ample safety factors, the physical stresses imposed during normal and extreme operation.

Minimize the effects of disruptive and reasonably foreseeable events like power outages, equipment or structural failures, earthquakes, fires, floods, and sabotage.

Protect against unauthorized entry, unauthorized use of water, and/or vandalism.

Protect against adverse effects in areas subject to freezing weather.

Water Supply Pressure

The distribution system shall be designed to maintain an operating pressure at all service connections of not less than 40 psi or more than 120 psi. During periods of maximum day usage and coincident fire demand, service pressure shall not be less than 20 psi.

In accordance with the Uniform Plumbing Code, in areas where the static water pressure is in excess of 80 psi, a pressure regulator shall be installed on the customer's side of the service meter. The pressure regulator shall be owned and maintained by the customer.

Water Usage Rates

For design of the distribution system, apply a maximum-day demand for each typical residential dwelling unit as in the following table. Peak-hour demands shall be assumed at 160% of the maximum-day demand. Usage rates for other existing entities may be obtained from the Agency.

Number of Dwelling Units in Development	Maximum-Day Flow (gpm) per Dwelling Unit
1-10	5
11-20	2.5
21-35	1.5
36-60	1.0
>60	0.8

Fire Flows

Required fire flows shall be determined by the Fire Protection District having jurisdiction. Maximum velocity anywhere in the Agency's system under peak day usage plus fire flow conditions shall be 7 feet per second.

Water Treatment Plants

Provide engineering report to the Agency for review and approval for all new Water Treatment Plant work or process change modifications. The report shall be prepared by a qualified engineer registered in California and experienced in potable water treatment. The report shall contain a description of the design of the proposed treatment process and address the means of compliance with all current and proposed regulations. All new water treatment plants or modifications to existing ones shall be designed in accordance with the latest requirements of the California Department of Public Health and Federal Regulations.

Wells

Each new public water supply well shall:

- Be constructed in accordance with the California Department of Water Resources Bulletins 74-81 and 74-90.
- Be equipped with chlorination facilities.
- Be equipped with a sampling tap located on the discharge line between the discharge check valve and the chlorine injection point.
- Include valves as necessary to allow the well to be pumped to waste. An approved backflow device shall be provided on the discharge line prior to connection to the treated water system.
- Be provided with piping to an acceptable location for receiving water pumped to waste.
- Be equipped with a flow meter capable of determining and recording the instantaneous rate of flow and total volume pumped over time.
- Be equipped with an emergency generator having fuel storage sufficient to run the well for a set amount of time determined by the Agency and dependent on the well's importance to the system.
- Include an adequately sized building, constructed of masonry block or other Agency approved building material, enclosing the chlorination facilities, meter, well head and emergency generator.
- Include a telemetry connection to the Agency's SCADA.

Storage Facilities

Water storage facilities shall:

- Have SCADA connection, SCADA control and Alarm Systems.
- Be designed with a separate inlet and outlet located on opposite sides of the facility to minimize short-circuiting of the water flow through the storage facility.
- Be equipped with isolation valves and bypass piping to allow the storage facility to be removed from service and accessed for maintenance.
- Be designed to allow ready access into the reservoir for inspections, cleaning, and repair. Storage facilities located above ground shall be equipped with a ladder to allow access to the entry opening. The ladder and access hatch shall be lockable and include an anti-climb device to prevent use by unauthorized persons. The ladder shall also be equipped with a fall restraint system conforming to Cal-OSHA regulations.
- Be constructed of welded steel in accordance with AWWA D-100 or prestressed concrete in accordance with AWWA D-110 and ACI-350.
- Be designed to include a paved access road around the facility perimeter.
- Include a security fence around the site with a lockable gate.

Provide tank overflow facilities to acceptable location. Overflow to be based on maximum influent supply.

Provide for chlorine removal on the overflow prior to discharge.

Have a Flow Meter and a Tank Hatch Alarm.

Water storage facility sizing shall be the sum of the following three components or as required by the Agency:

Operational Storage – 25 percent of the maximum day demand for the pressure zone.

Fire Storage – The maximum combination of fire flow and duration in the pressure zone.

Emergency Storage – 25 percent of the maximum day demand for the pressure zone.

Pumping Stations

An engineering report shall be prepared by an engineer registered in California and competent to work on new pumping stations or modifications to existing ones. The report shall contain, at a minimum, a description of the proposed pumping facilities or modifications, hydraulic and pump design criteria, system surge analysis, an estimate of the annual operation and maintenance costs, and a description of the control logic.

Pumping stations shall:

Be paved and fenced.

Be designed for automatic operation.

Be designed with enough pump redundancy to operate the station at maximum design flow with one pump out of operation.

Be designed with for multiple pumps, rather than a single pump to reduce the chance of pump station shutdown.

Be enclosed within an adequately sized masonry block building having adequate access for operation and maintenance.

Have a meter measuring instantaneous flow and total volume.

Be connected to the Agency's SCADA system.

Include building intrusion alarms.

Pressure Reducing Stations

Pressure reducing stations shall:

Be located at locations determined by the Agency.

Be designed with a single diaphragm-actuated and/or direct-acting pressure reducing valves of sufficient size and/or quantity to convey the full capacity of the pipeline supplying the pressure reducing station.

Be located on property granted to the Agency or on Agency property.

Be designed as an above-ground facility. The pressure reducing station shall be enclosed in a masonry block building or a light-duty permanent housing, per Agency decision and per Standard Drawings S213 and S214.

Be designed with a bypass matching the size of the adjacent main.

Include pressure readouts upstream and downstream of the pressure reducing valve, metering flow rate, and Agency's SCADA control with the Agency system.

Interconnections with Other Water Purveyors

Interconnections with other water purveyors shall:

- Be provided if required by the Agency.
- Be located per the Agency's requirement.
- Include a meter that accurately measures the rate of flow, totalizes the flow each way, and is connected with the SCADA system.
- Include a length of exposed pipeline with no fittings or flow disruptions equal to at least five pipeline diameters or manufacturer's recommendation on both sides of the meter.
- At the Agency's discretion, include adequately sized bypass piping and valves to be used in the event that the meter must be removed for maintenance.
- Include a telemetry connection to the Agency's existing telemetry system. The connection shall provide the ability to monitor real-time rate of flow and to produce reports showing total flow volume per hour, day, and month.
- Include an above-ground pedestal located adjacent to the metering facility containing the telemetry and communication equipment. A digital readout of the meter's cumulative total flow volume in thousand gallons (or other appropriate unit as agreed to by the Agency) shall be located within the pedestal.
- Be designed with adequate space to park a vehicle off-street adjacent to the metering facility.

Telemetry

Telemetry and communication equipment shall be designed in accordance with the Agency's current hardware and software design guides. Communication between remote sites and the Agency's current telemetry network shall be by radio using the Agency's designated frequency. In the event that a clear radio path is not available between the remote site and the Agency's communication system, a leased telephone line using the Agency's current circuit or fiber-optic network may be used with approval from the Agency.

Telemetry connections shall be required at the following locations:

- Water treatment plants
- Wells
- Storage tanks
- Pressure reducing stations
- Pumping stations
- Metering stations for interconnections with other water purveyors
- Other key facilities as determined by the Agency where real time and/or historical information will assist the Agency in providing water service in a safe, reliable, and efficient manner.

Corrosion Control

At a minimum, corrosion control measures shall be considered for improvements for the following facilities:

- Storage tanks
- Valves
- Transmission pipelines
- Bore-and-Jack or microtunneling casings and carrier pipes.

Landscaping

When required by the Agency, landscaping shall be provided at Agency facilities. Landscaping design shall take into account local landscaping ordinances, utilize drought tolerant plants, and include an irrigation system that requires minimal maintenance.

Landscaping may be required for improvements to the following facilities and may be required at other types of facilities at the Agency's discretion.

- Water treatment plants
- Storage tanks
- Pumping stations
- Pressure reducing stations
- Metering stations
- Other facilities located on Agency property

Distribution System

Design Criteria

- Depth of cover shall be a minimum of 30 inches except in the Cold Climate Area. In the Cold Climate Area, 48 inches minimum cover is required.
- Trench width shall be a minimum of 1 pipe diameter plus 12 inches for distribution pipes, 1 pipe diameter plus 24 inches for transmission pipes.
- Bedding shall be compacted 90 percent maximum dry density to 12 inches above pipe, load factor 1.5.
- Soil density:150 pounds per cubic foot.
- Bedding angle: 90 degrees.
- Live load: AASHTO H-20, 16,000 pound wheel load.
- Rigid pipe: 1.5 factor of safety versus crushing.
- Flexible pipe: deflection at joint is not allowable. All Horizontal changes in directions shall be made with fittings.
- Design conditions apply to an empty conduit with no internal pressure.
- Ductile iron pipe (DIP) shall be installed adjacent to and at least 40 feet on either side of fuel tanks, fueling stations, or individual properties using volatile material on the property.

Hydraulic Analysis

A hydraulic analysis of any proposed addition to the water system shall be provided to the Agency upon request. Provide to the Agency the peak-hour, peak-day, and fire flows expected in the system improvement to the Agency. Agency staff will provide high and low pressures expected in the existing system given the maximum flows stipulated. The Hazen-Williams formula shall be used in the hydraulic analysis using the following "C" values:

Pipe Material	"C" Value
Ductile Iron Pipe	130
PVC Pipe	140
Concrete Bar-Wrapped Cylinder Pipe	130
Mortar-Lined Steel Pipe	130

Pipe Material, Allowable Sizes, and Pressure Class Rating

Pipe mains for treated water shall be constructed of PVC, DIP, concrete cylinder pipe (CCP), or mortar-lined steel pipe (MLS). Allow a minimum of 50 psi surge allowance in distribution and transmission main material selection. Pressure class shall exceed the test pressure and meet other pressure class requirements in the Standards.

PVC Pipe, AWWA C900

PVC pipe shall be allowed in 4", 6", 8", and 12" sizes only. For working pressures less than 130 psi, pipe shall be Class 150, DR 18. For working pressures between 130 psi and 180 psi, pipe shall be Class 200, DR 14. PVC pipe is not allowed under higher working pressures. All changes in direction of PVC pipe must be made using fittings.

Ductile Iron Pipe, AWWA C151

Ductile iron pipe may be used in 4", 6", 8", 12", 16", 18", 20", 24", 30", 36", and 42" sizes. Ductile iron pipe shall have a pressure class rating greater than the working pressure. Ductile iron pipe deflections shall be less than 0.75 times the manufacturer's allowed deflection. Pipe curve radii shall be greater than 1.33 times the manufacturer's minimum radii.

Concrete Bar-Wrapped Cylinder Pipe, AWWA C303

Concrete Cylinder Pipe may be used in sizes 30" to 60" or as otherwise approved by the Agency. Applicants shall determine the pressure rating of concrete cylinder pipe.

Steel Cylinder Pipe, AWWA C200

Steel Cylinder Pipe may be used in sizes 30" and larger or as approved by the Agency. Applicants shall determine the pressure rating of steel cylinder pipe.

Pipeline Sizing

All pipelines shall be the largest size required to convey the following:

Peak-hour flow using a maximum flow velocity of 5 feet per second.

Peak-day flow plus fire flow using a maximum flow velocity of 7 feet per second.

Storage replenishment flow using a maximum flow velocity of 5 feet per second.

The minimum transmission line diameter shall be 12 inches. The minimum distribution system pipe diameter shall be six inches. The minimum pipe size to serve a single fire hydrant shall be a looped (two way feed) 6-inch or a single 8-inch.

Restrained Pipeline Joints

Restrained joints shall be designed at the following locations:

Horizontal and vertical angle fittings.

Tees and crosses.

In-line valves.

Dead-end pipelines.

Fire hydrant laterals.

Minimum restrained lengths may be determined through application of EBAA Iron's Restrained Length Calculator using soil type SM, safety factor 1.5:1, trench type 5. Restrained length for valves shall be that of dead ends.

Valves

Treated Water

For the distribution system, provide a sufficient number of valves such that no single shut down will result in taking more than 1,000 feet of pipeline out of service and such that no more than two fire hydrants will be taken out of service during a shut down. Within residential areas, valves shall have a maximum spacing of 500 feet and shall be located at intersections where practical and the projection of a property line in a straight run of pipe. In commercial and industrial areas, maximum valve spacing is 350 feet. All tees shall have 3 valves and all crosses shall have 4 valves, with the exception of tees for hydrants, services, and blow-offs.

Valve sizes shall conform to the pipe size unless shown otherwise on approved Plans. Valve class shall exceed the test pressure.

All 4-inch, 6-inch, and 8-inch valves shall be gate type. Valves 12 inches and larger shall be butterfly type.

All valves shall include a 17-lb. anode with their installation per Standard Drawing S112.

Raw Water

Isolate pressurized raw water mains with gate valves (all sizes). Valves larger than 16 inches in diameter require a minimum 4" bypass.

Fire Hydrants

Fire hydrants shall be designed at locations in accordance with the Uniform Fire Code, and or the Fire Protection District having authority and Placer County. Hydrants shall at a minimum be spaced with a maximum interval of 500 feet in residential areas and 350 feet in industrial or commercial areas. All hydrants to be located within the cold climate area (see Standard Drawing S501) shall be dry barrel type hydrants. The local fire protection authority shall provide the hydrants make and model. Fire hydrant laterals shall be constructed of 6-inch ductile iron pipe that is fully restrained from the mainline tee to the hydrant. In addition to restrained joints, all fire hydrants shall have a thrust block at the base of the hydrant bury.

Blow-off Valves

Blow-off valves (BOV) shall be located at major low points, at the end of all dead-end pipelines, and at pressure zone boundaries located at pressure reducing stations.

Wherever possible, install the BOV in the street right-of-way, three feet or more away from the curb and gutter. Ensure BOV's cannot back-siphon into the distribution system in their projected locations by providing a watertight cap on discharge piping per Standard Drawings S208, S209, S506, and S507.

The Agency will provide locations for BOV's on pipelines with existing hydrants.

For sections of line without fire hydrants, size BOV for minimum 2.5 feet per second flushing velocity. For 8-inch mains, use a minimum 4-inch BOV. For 12-inch and larger mains, use a minimum 6-inch BOV.

The 6-inch BOV shall be a standard fire hydrant.

Terminate stubs for future service with a two-inch end-of-line BOV.

Water Quality Sampling Stations

The Agency will determine the need for water quality sampling stations based on the size and location of the proposed development, proximity to other sampling stations, layout of the distribution system, distance to source of treated water, and other factors. Water quality sampling stations shall be provided by the applicant at locations as determined by the Agency.

Air/Vacuum Release Valves

A combination air-vacuum release valve (AVRV) shall be installed at all high points and at intervals of no more than 1,000 feet along constant slopes. For pipelines 12 inches and smaller, use a 1-inch AVRV. For pipelines larger than 12 inches, the Applicant shall determine the AVRV size and submit supporting calculations showing the adequacy of the recommended size to prevent pipe failure. These submittals shall be stamped by a professional engineer registered in California.

Pipeline Layout and Clearances

Dead-end pipelines shall be avoided wherever possible. Distribution systems shall be designed with looping pipelines such that all points within the distribution system are connected to a minimum of two source pipelines. Exceptions to this shall be at cul-de-sacs, at pressure zone boundaries, and at other locations approved by the Agency.

All pipelines and other distribution facilities shall be installed within public rights-of-way or easements or on land granted to the Agency. When pipelines are installed within improved streets, the pipeline shall be located beneath pavement and have a minimum horizontal clearance of three feet between the edge of pipe and lip of gutter or edge of pavement. When pipelines are installed within an easement, they shall be centered within the easement or placed to have at least 10 feet clearance from the closest easement line. Variances from this requirement may be approved at the Agency's discretion.

All sewer/water crossing and separation requirements shall conform to the State of California Department of Public Health or these requirements, whichever is more stringent. All sewer/water crossings shall be designed with the crossing being as close to perpendicular as practical and with the sewer line crossing under the water line. See Standard Drawings S103 and S104 for detailed clearance requirements.

No parallel utilities or structures such as street light foundations, etc. shall be installed within 2 feet of either side of the water pipeline trench.

Design water mains to deflect no more than 75 percent of the manufacturer's maximum allowable deflection radius for the pipe type selected. For PVC mains, deflections must be accommodated by installing fittings, not by deflecting joints.

Where required, install trench cutoff walls with drains. The drains shall be a 2-inch minimum pipe and have a minimum slope of 1 percent to daylight.

Manifolds

Manifolds may be provided for three or more services with Agency approval. The minimum manifold size is 4 inches.

Special Separation Requirements

Pipelines to be installed within 40 feet of underground fuel tanks or fuel pipelines shall be constructed of ductile iron pipe with fuel-resistant gaskets.

Water Service Piping and Metering

Water service pipelines from the water main to the meter box shall be installed at the time the main is constructed.

Meter Size	Service Pipe Size
5/8 x 3/4, 3/4 and 1-inch	1-inch copper
1½, 2-inch	2-inch copper
3, 4-inch	4-inch ductile iron
6, 8-inch	8-inch ductile iron
10, 12-inch	12-inch

All service connections shall include an isolation valve at the main. Isolation valves shall be 1-inch corporation stops for 1-inch service pipes; 2-inch and larger service isolation valves shall be gate valves sized to the service pipe with 2-inch operating nuts.

All service connections shall be metered. The type of meter shall be determined by the Agency. Meters may be manual-read or radio-read.

Meter boxes shall be located at the edge of the right of way or easement and grouped at property lines not already occupied by other utilities. Meter boxes shall not be located in driveways, sidewalks or any vehicle or pedestrian traffic area. Service lines to apartment or condominium projects shall be grouped in one location along a public street.

Three-inch and larger meters shall have lockable meter bypass piping as shown on the Standard Drawings.

[This page intentionally left blank.]

SECTION 2
DESIGN CRITERIA FOR RAW WATER FACILITIES

Intent of Criteria

The intent of these criteria is to:

Minimize operation and maintenance costs for the Agency related to debris and refuse removal from the raw water distribution system.

Minimize potential damage claims from canal seepage, increased discharges at spill locations, and canal failure or overflow problems.

Prevent storm water discharge into the canal system to prevent overtopping canal and prevent pollution.

Protect the quality of water delivered to water treatment plants and to canal customers by minimizing the amount of pollutants and debris entering the canal system.

Minimize the potential for personal injury associated with open canals.

Reduce water loss from the raw water distribution system by reducing evaporation and seepage.

Canal Encasements

Canal encasement is defined as replacement of an Agency open canal with the installation of a pipeline or concrete box culvert in accordance with these requirements.

Encase canals located within 400 feet of areas proposed for residential development with parcels or lots of two acres or less, or areas proposed for industrial, commercial, municipal or institutional uses. Canal encasement shall also be required where new roads are created within 100 feet uphill of a canal. Canal realignments may also be required at the Agency's discretion.

All canal encasements, other than those being tied into at the downstream end of an existing encasement that has a safety/debris trash rack, shall include an inlet structure with a safety/debris trash rack, a trash rack box and an automatic spillway designed to overflow the design capacity of the canal above the crown of the encasement. The Developer shall grant to the Agency easement(s) that provide full legal rights to spill the required amount of water at this location at any time. The spillway shall be designed to avoid loss and/or damage to life and/or property. The Agency shall determine the need for manholes and other appurtenances.

Developers of property located on an open canal shall be required to take such action as directed by the Agency to ensure that the intent of the criteria identified above has been met.

Sizing

The design capacity of canal encasements shall be at least 25 percent greater than the normal peak canal flow. The minimum size pipe for encasements shall be 18 inches.

Materials of Construction

1. The following materials may be used for encasement of canals under pressure flow conditions:

   Mortar Lined Steel Pipe (MLS)

   Ductile Iron Pipe (DIP)

   Polyvinyl Chloride Pipe (PVC)

   Fusion-welded High-Density Polyethylene (HDPE)

2. The following materials may be used for encasement of canals under non-pressure flow conditions:

   All materials allowed for pressure flow conditions.

   Precast or cast-in-place gasketed concrete box culvert.

   PVC closed profile pipe.

3. For design use the Manning's "n" values per specified pipe.

Default Manning's "n" Values	
Pipe Type	**Manning's "n"**
PVC	0.011
HDPE	0.012
ALL OTHER	0.013

Bends

All bends exceeding 22.5 degrees shall be constructed with a manhole per Standard Drawing S307. Where multiple bends occur, provide a minimum of 10 feet of pipe between bends. Bends on pressure flow pipe shall not exceed 45 degrees and shall have a minimum of 3 pipe diameters between bends under pressure flow.

Valves

All raw waterlines shall be designed using gate valves. Raw water gate valves 16 inches and larger shall have a 4-inch minimum bypass valve. See also Div.3 Sect.1, Raw Water Valves.

Mitigating Measures

An encasement variance may be approved at the Agency's discretion, if the developed area encroachment can be reduced by providing appropriate setbacks. The distance for the setback areas from the top of canal cut and from the toe of canal fill will be set by the Agency. These areas within the setbacks may become green belt areas; however, no trees or bushes shall be allowed within five feet of top of cut or toe of fill, or 20 feet from water's edge, whichever is greater. Paved parking areas may be placed within the setback areas if positive controls are used to divert drainage away from the canal. All other surface drainage must be directed away from canal. Fences may be necessary for developments attracting children, such as residential, educational, or commercial.

A legal entity must be formed to accept responsibility for maintenance repair and replacement of drainage facilities, fences, landscaping and other improvements within the setback area containing the canal.

Easements shall be granted to the Agency covering the entire setback areas. The Agency shall have the right to operate and maintain the canal at its discretion. The Agency shall be held harmless by the owner of the land during the life of the easement for destruction of any vegetation, structures, or other facilities. Spoils from cleanings or enlargements of the canal may be graded out on the berm and/or spilled over the outside of the berm. The Agency shall continue its use of aquatic weed control, weed and brush control, and all other normal maintenance activities.

Inverted Siphons

The minimum diameter for inverted siphons is 18 inches. Inverted siphons shall be designed with reinforced concrete inlet and outlet structures. A blow off valve shall be installed at the low point on inverted siphons. The minimum size blow off shall be 12 inches with a 12-inch gate valve.

Road and Other Crossings

All road, pedestrian, equestrian, or other crossings of canals shall be by bridges. Culverts are not allowed. Bridges shall be designed to allow Agency personnel and equipment to pass when traveling along the canal.

After construction of footings and prior to bridge deck installation, the canal shall be improved to the current Agency requirements, guniting beneath the future bridge 10 feet upstream and downstream. The Agency shall make the improvements to the canal. The property owner shall pay these costs.

Bridges shall conform to Standard Drawing S301 and the following:

All bridges are to be a clear span over the canal and its banks. Bridges shall be supported by abutments outside of the outer edge of the canal banks. No piers are allowed in the canal.

Bridges shall be wood, welded steel, or welded aluminum. Other materials of construction may be proposed. Railroad flatcar bridges may be used in accordance with these specifications.

Pedestrian bridges up to 15 feet in span shall be designed to support a live load of 100 pounds per square foot, minimum. They do not need to be engineered, but must be approved by an Agency engineer.

Pedestrian bridges greater than 15 feet in span shall be engineered.

All vehicle bridges, bridges with a clear width of 8 feet or more, and railroad flatcar bridges shall be engineered.

For all bridges, drawings and product data shall be submitted to the Agency for review and approval.

For engineered bridges, engineering calculations signed and stamped by an engineer registered in the state of California shall be submitted with drawings and product data for review and approval.

Engineered pedestrian, equestrian, and bicycle bridges shall be designed in accordance with the *Guide Specifications for Design of Pedestrian Bridges* by the American Association of State Highways and Transportation Officials (AASHTO), latest edition.

Vehicle bridges shall be designed in accordance with the *Standard Specifications for Highway Bridges* by the American Association of State Highways and Transportation Officials (AASHTO) and California Fire Code, latest edition. Proof of approval by acting fire district shall be submitted to Agency.

Railroad flat cars must be inspected by an engineer registered in the State of California. The engineer shall determine whether the flatcar will meet the loading requirements for its intended use.

The Approved Products List (Appendix E) gives names of known bridge manufacturers and suppliers. The list is not an endorsement of these manufacturers, nor is the list exhaustive. Other manufacturers and suppliers exist.

Telemetry

Provide telemetry connections to monitor level at all spill locations, ends of canals, regulating stations, and gauging stations. Telemetry equipment shall be designed in accordance with the Agency's current hardware and software design guide.

Inlet and Outlet Structures

The inlet structure shall have a spillway designed to convey the full capacity of the raw water pipe. The spillway shall operate automatically in the event that water flow is obstructed downstream and shall also have the capability of being operated manually. The applicants shall provide a means of manually obstructing or diverting water from entering the pipe without raising the water surface level above the normal high water mark. See also Div. 3 Sect.1, Inlet & Outlet Structures.

Trash Racks

A hinged, lockable trash rack shall be installed at all raw water inlets. Install trash racks at approximately 2 to 1 horizontal to vertical or flatter and in line with the flow of water. The opening between bars shall be 4 inches clear or as determined by the Agency. See also Div. 3, Sect.1, Trash Racks.

Horizontal cross braces shall be located no farther than 6 inches from the bottom and top of the trash rack. No other cross braces will be allowed. The Agency may require fine screens such as wedge wire screens.

Repair damaged or inadequate Zinc coating.

Trash boxes shall be provided at all trash racks per standard drawing S309.

Required Information

Design data, easements and detailed Plans and specifications for an encasement shall be submitted to and approved by the Agency prior to the start of construction. Generally, the design data, easements, and Plans and specifications shall include the following:

- Detailed plan and profile of the canal encasement and entrance and exit conditions.
- Before and after backwater curve and related calculations.
- Cross sections along the canal length to identify significant changes in the cross sections.
- Design calculations for inlet structure and automatic spill.
- Summary of anticipated peak flows.
- Design data on upstream and downstream canal transitions.
- Details of overflow discharge.
- Detailed location and width of all existing and proposed canal and spill easements on the Plans.
- Submit legal descriptions and plat maps of proposed easements along with an AGENCY "Grant of Easement" form for each easement. Easements shall go through an escrow officer.

Hand Rails

Where designs of trash racks or other facilities create grade separations of greater than 30 inches, hand rails of aluminum or galvanized steel shall be provided.

SECTION 3
CROSS CONNECTION CONTROL

Purpose

The purpose of the Agency's cross connection control program is to:

Protect the public water supply against contamination through cross connections by isolating sources of contamination within a water user's premises.

Eliminate existing connections between drinking water systems and other sources of water that are not approved as safe and potable for human consumption.

Eliminate cross connections between drinking water and sources of contamination.

Prevent future cross connections.

These regulations are adopted pursuant to the State of California Administrative Code, Title 17 - Public Health entitled "Regulations Relating to Cross-Connections".

It is unlawful for any person, firm or corporation at any time to make or maintain or cause to be made or maintained, temporarily or permanently, for any period of time whatsoever, any cross connection between plumbing pipes and/or water fixtures being served with potable water by the Agency and any other source of water supply or to maintain any sanitary fixture or other appurtenances or fixtures which, by reason of their construction, may cause or allow backflow of water or other substances into the water supply system of the Agency and/or the service of water pipes or fixtures of any consumer of the Agency.

Definitions Pertaining to Cross Connection Control

Air-Gap (AG) Separation: A physical break between a supply pipe and a receiving vessel. The air-gap shall be at least double the diameter of the supply pipe measured vertically above the top rim of the vessel, in no case less than one inch.

Approved Backflow Prevention Device: Devices which have passed laboratory and field evaluation tests performed by a recognized testing organization which has demonstrated their competency to perform such tests to the California Department of Public Health. A list of approved backflow prevention devices can be obtained from Agency Customer Service Department or Engineering Division.

Auxiliary Supply: Any water supply on or available to the premises other than the potable water supply.

AWWA Standard: An official standard developed and approved by the American Water Works Association (AWWA).

Backflow: A flow condition, caused by a differential in pressure, that causes the flow of water or other liquids, gases, mixtures or substances into the distributing pipes of a potable supply of water from any source or sources other than a potable water supply source. Back-siphonage and back pressure are causes of backflow.

Contamination: A degradation of the quality of the potable water by any foreign substance which creates a hazard to the public health, or which may impair the usefulness or quality of the water.

Cross Connection: Any unprotected actual or potential connection between a potable water system used to supply water for drinking purposes and any source or system containing unapproved water or substance that is not or cannot be approved as safe, wholesome, and potable. By-pass arrangements, jumper connections, removable sections, swivel or changeover

devices, or other devices through which backflow could occur, shall be considered cross connections.

Double Check (DC) Valve Assembly: An assembly of at least two independently acting check valves including flanged, full port resilient wedge shut-off valves on each side of the check valve assembly, and test cocks available for testing to check the watertightness of each check valve.

Double Check Detector Assembly (DCDA): An assembly of at least two independently acting check valves including flanged, full port resilient wedge shut off valves on each side of the check valve assembly and test cocks available for testing to check the water tightness of each check valve. The double check assembly shall have a 3/4" X 5/8" detector meter (reading in cubic feet) installed around the valves (Standard Drawing S206).

Health Agency: The State of California Department of Public Health, or Placer County Department of Environmental Health with respect to a small water system.

Local Health Agency: The Placer County Environmental Health Department.

Person: The term "person" means an individual, corporation, company, association, partnership, municipality, public utility, or other public body or institution.

Premises: The term "premises" means any and all areas on a water user's property which are served or have the potential to be served by the public water system.

Public Water System: The term "public water system" means a system for the provision of piped water to the public for human consumption that has fifteen or more service connections or regularly serves an average of 25 individuals daily at least 60 days out of the year.

Reclaimed Water: The term "reclaimed water" means a wastewater which, as a result of treatment, is suitable for uses other than potable use.

Reduced Pressure Principle Device: The term "reduced pressure principle backflow prevention device" means a device incorporating two or more check valves and an automatically operating differential relief valve located between the two checks, a flanged, full port resilient wedge shut-off valve on each side of the check valve assembly, and equipped with necessary test cocks for testing.

Reduced Pressure Principle Detector Assembly: The term "reduced pressure principle backflow prevention device" means a device incorporating two or more check valves and an automatically operating differential relief valve located between the two checks, a flanged, full port resilient wedge shut-off valve on each side of the check valve assembly, and equipment with necessary test cocks for testing. The reduced pressure principle backflow device shall have a 5/8" by 3/4" detector meter (reading in cubic feet) installed around the valves.

Service Connection: The point of connection of a user's piping to the water supplier's facilities.

Water Supplier: The person who owns or operates the water supply system.

Water supply: Any water supply whose potability is regulated by a State or local health agency.

Water User: Any person obtaining water from a water supply system.

Responsibility

Under the rules of Title 17 relating to cross connection, the Agency has responsibility to prevent water from unapproved sources, or any other substances, from entering the Agency's water system. The Agency is primarily responsible for the prevention of contamination and pollution of the Agency's water system. Such responsibility begins at the point of origin of the Agency's water supply and includes treatment facilities and water mains, and the point of service (meter) to the

water user's water system. The Applicant shall ensure adequate backflow and back-siphonage protection is maintained on the water user's system directly connected to the Agency's system.

Water users shall have the prime responsibility of preventing contaminants and pollutants from their water system from entering the Agency's water system as required by this policy and the California Department of Public Health.

The Agency shall not be responsible for any loss or damage directly or indirectly resulting from or caused by any improper or negligent installation, operation, use, repair, or maintenance of, or interference with, any approved backflow prevention assembly, required by this policy, by any water user or any other person.

Water users shall bear all costs for the installation of pumps or renovation of existing water piping, as a result of any decreases in line pressure attributed to the upgrading of existing backflow prevention assemblies or the installation of approved backflow prevention assemblies.

The Agency shall not be held responsible for any losses or damages incurred by water users as a result of upgrading existing backflow prevention assemblies or the installation of approved backflow prevention assemblies.

Cross Connection Control Requirements

General Provisions

Unprotected cross connections with the public water supply are prohibited. Whenever backflow protection is necessary, the Agency will require water users to install approved backflow prevention devices at their expense for continued service, or before a new service will be granted. Wherever backflow protection has been found necessary on a water supply line entering a water user's premises, any and all water supply lines from the Agency's mains entering such premises, buildings, or structures, shall be protected by an approved backflow prevention device. The type of device to be installed will be in accordance with the requirements of this program.

Where Protection is Required

Each service connection from the Agency's water system for supplying water to premises having an auxiliary water supply shall be protected against backflow of water from the premises into the public water system unless the auxiliary water supply is accepted as an additional potable water supply by the Agency, and is approved by the public health agency having jurisdiction.

Each service connection from the Agency's water system for supplying water to any premises on which any substance is handled in such fashion as may allow its entry into the water system shall be protected against backflow of the water from the premises into the public system. This shall include the handling of process waters and waters originating from the Agency's water system which have been subjected to deterioration in sanitary quality.

Backflow prevention devices shall be installed on the service connection to any premises having (a) internal cross connections that cannot be permanently corrected and controlled to the satisfaction of the Agency or state and local health department, or (b) intricate plumbing and piping arrangements or where entry to all portions of the premises is not readily accessible for inspection purposes, making it impracticable or impossible to ascertain whether or not cross connections exist.

Type of Protection Required

The type of protection that shall be provided to prevent backflow into the water supply shall be in accordance with Table 1. The type of protective device that may be required,

listed in an increasing level of protection, includes: Double Check Valve Assembly (DC), Reduced Pressure Principle Device (RP), and Air Gap (AG). The water user may choose a higher level of protection than required by the Agency. The minimum types of backflow protection required to protect the water supply at the user's water connection to premises with varying degrees of hazard are given in Table 1. Situations not covered in Table 1 shall be evaluated on a case-by-case basis and the appropriate backflow protection shall be determined by the Agency. The Agency reserves the right to install a more stringent device than listed if, in its judgment, the particular circumstances of that water user require a higher degree of backflow protection.

Requirements Abbreviations

Table 1 uses the given abbreviations for these types of devices:

Air Gap Separation = AG;

Reduced Pressure Principle Device = RP;

Double Check Valve Assembly = DC;

Double Check Detector Assembly = DCDA

Reduced Pressure Principle Detector Assembly = RPDA.

TABLE 1: Hazard Criteria and Appropriate Types of Backflow Protection *

(* from DHS Table 64758)

Hazard	*Required Level of Protection*
(1) Auxiliary Water Supplies	
(A) Auxiliary supply that is interconnected with a piping system connected to the public water system (PWS)	Air gap separation [2]
(B) Auxiliary supply that is not interconnected with a piping system connected to the PWS and has piped water conveyed under pressure in a piping system less than 200 feet from the piping system connected to PWS	Reduced pressure principle [2]
(2) Fire Protection Systems	
(A) Fire protection system interconnected with a piping system connected to the PWS and an onsite auxiliary water supply for fire fighting	Air gap separation [2]
(B) Fire protection system supplied by the PWS with an interconnection to onsite storage facilities and pumps, or combined fire and industrial water	Reduced pressure principle [1]

(3) Marina or port facilities	
(A) Residential	Reduced pressure principle [2]
(B) Nonresidential	Reduced pressure principle [1]
(4) Premises with multiple service connections to the PWS	Reduced pressure principle [2]
(5) Recycled Water	
(A) Recycled water supply system that is (1) interconnected to a piping system	Air gap separation[1]
(2) not interconnected to a piping system	Reduced pressure principle [1]
(B) Recycled water supply system used only for landscape irrigation in an approved dual-plumbed use area established pursuant to sections 60313 through 60316, which is used for	
(1) Individually owned residential units	Reduced pressure principle
(2) Sites other than individually owned residential units	Reduced pressure principle [2]
(6) Graywater (see graywater definition in Section 14876 of the California Water Code)	
(A) System that produces, or collects and distributes, graywater, and is	Air gap separation[1]
(1) interconnected to a piping system connected to the PWS	
(2) not interconnected to a piping system connected to the PWS	Reduced pressure principle [1]
(7) Sewage and Hazardous or Potentially Hazardous Substances	
(A) Waste water treatment processes, handling and/or pumping equipment interconnected to a piping system connected to the PWS	Air gap separation[1]
(B) Waste water treatment processes, handling and/or pumping equipment not interconnected to a piping system connected to the PWS, except that no backflow protection is required for a single-family residence that has a sewage lift pump unless there are other hazards present on the property	Air gap separation [2]

(C) Premises handling a substance in any manner in which the substance may enter a piping system connected to the PWS	Air gap separation [2]
(D) Recreational vehicle dump station that is not interconnected to a piping system connected to PWS	Reduced pressure principle [1]
(E) Piped irrigation system interconnected to a piping system connected to the PWS, into which fertilizers, herbicides, or pesticides are, or intended to be, injected into the irrigation water.	Reduced pressure principle [1]
(F) Piping system conveying a fluid not from an approved water supply (canal water) that is	
(1) interconnected to a piping system to the PWS	Air gap separation [2]
(2) not interconnected to a piping system connected to the PWS	Reduced pressure principle [2]
(8) Roadway right-of-way irrigation system interconnected to a piping system connected to the PWS, and there is no potential for back pressure	Pressure vacuum breaker[2]
(9) Water storage facility not under control of PWS	Air gap separation [2]

[1] The water supplier shall not allow a lower level of protection than that designated.

[2] The water supplier may allow protection at one level lower than the designated, pursuant to subsection 64758(b)

[3] A lower level of protection may be allowed if the recycled water supplier obtains the approval of the local public water supplier, or of the Department if the water supplier is also the supplier of the recycled water. An approved alternative backflow protection plan shall be implemented that at a minimum includes annual inspections and annual tests of the recycled water and potable water systems to determine whether any cross connections exists.

Backflow Prevention Devices

Approved Devices

Only backflow prevention devices (BPD) that are listed on the most current edition of the State Department of Public Health' list shall be acceptable for installation by a water user connected to the Agency's potable water system.

The Agency will provide, upon request, a copy of the most current edition of the State Department of Public Health' list of approved backflow prevention devices. The list is available at the Agency's Customer Services Department.

Installation

Backflow prevention devices shall be installed as prescribed in Section 7603, Title 17 of the California Code of Regulations. Location of the devices shall be no farther than 3 feet from the water user's meter. In cold climates, the device may be located immediately inside the building being served. In all cases, the device shall be located before the first branch line leading off the service line. If the device is located inside the structure, the device and the customers system shall be open for inspection at all reasonable times to authorized representatives of the Agency to determine if cross connection hazards exist. The Agency shall have the final authority in determining the location of a backflow prevention device.

The following is a description of the installation of backflow devices. See also standard drawings S207 and S208 for installation requirements.

Air-gap (AG) Separation

An AG must be located as close as practical to the water user's connection, and all piping between the user's connection and receiving tank must be entirely visible unless otherwise approved in writing by the Agency.

Reduced Pressure (RP) Principle Backflow Prevention Assembly

An RP must be located no farther than 3 feet from the water user's meter. This type of assembly must be installed 36 inches above grade (measured from the outside top of the 90° transition fitting, do not use top of flange), and must have a minimum of 12 inches side and top clearance to allow access for testing and maintenance.

Double Check Valve Assembly (DC)

The approved double check valve assembly shall be located no more than 3 feet from the water user's connection and shall be installed above grade, if possible, and readily accessible for testing and maintenance (12 inches minimum side and top clearance). If a double check valve assembly is installed below grade, it must be installed in a vault with a minimum of 12 inches between the bottom of the vault and the bottom of the assembly. The top of the assembly shall be no more than 8 inches below grade, the clearance between the side of the assembly with the test cocks and the side of the vault shall be a minimum of 12 inches, and the clearance between the other side of the assembly and the side of the vault. "Y" type assemblies must be installed on their "side," with the test cocks in a vertical position so that either check valve may be removed for service without removing the assembly. Vaults without an integrated bottom must be placed on a 6-inch layer of gravel.

Testing and Maintenance

The owners of any premises on which, or on account of which, backflow prevention devices are installed, shall have the devices tested by a person with a certification for backflow prevention assembly testing from the American Water Works Association or other authority acceptable to the Agency. Test backflow prevention devices at least annually and immediately after installation, relocation, or repair. The Agency may require a more frequent testing schedule, if necessary. No device shall be placed back in service unless it is functioning as required. A report, in a form acceptable to the Agency, shall be filed with the Agency each time a device is tested, relocated, or repaired. These devices shall be serviced, overhauled, or replaced whenever they are found to be defective. All costs of testing, repair, and maintenance shall be borne by the water user.

The Agency will supply affected water users with a list of persons acceptable to the Agency to test backflow prevention devices. The Agency will notify affected customers by

mail when annual testing of a device is needed and will supply users with the forms to be filled out each time a device is tested or repaired.

Removal

Approval must be obtained from the Agency before a backflow prevention device is removed, relocated, repaired, or replaced.

Removal: The use of a device may be discontinued and the device removed from service upon presentation of sufficient evidence to the Agency to verify that a hazard no longer exists and is not likely to be created in the future;

Relocation: A device may be relocated following confirmation by the Agency that the relocation shall continue to provide the required protection and satisfy installation requirements. A retest shall be required following the relocation of the device;

Repair: A device may be removed for repair, provided the water use is either discontinued until repair is completed and the device is returned to service, or the service connection is equipped with other backflow protection approved by the Agency. A retest shall be required following the repair of the device; and

Replacement: A device may be removed and replaced provided the water use is discontinued until the replacement device is installed. All replacement devices must be approved by the Agency and must be commensurate with the degree of hazard involved.

User Supervisor

At each premises, where it is necessary in the opinion of the Agency, a user supervisor shall be designated by and at the expense of the water user. This user supervisor shall monitor the backflow prevention devices and ensure no cross connections are made. In the event of contamination or pollution of the drinking water system due to a cross connection on the premises, the Agency shall be promptly notified by the user supervisor so that appropriate measures may be taken to overcome the contamination. The water user shall inform the Agency of the user supervisor's identity annually and whenever a change in Supervisor occurs.

Administration Procedures

Water System Inspection

The Agency shall review all requests for new services to determine if backflow protection is needed. Plans and specifications must be submitted to the Agency upon request for review of possible cross connection hazards as a condition of service for new service connections. If it is determined that a backflow prevention device is necessary to protect the public water system, the required device must be installed before service shall be granted.

The Agency may require an on-premise inspection to evaluate cross connection hazards. The Agency shall transmit a written notice requesting an inspection appointment to each affected water user. Any water user who cannot or will not allow an on-premise inspection of his piping system shall be required to install the backflow prevention device the Agency considers necessary.

The Agency, at its discretion, may require a re-inspection for cross connection hazards of any premise to which it serves water. The Agency shall transmit a written notice requesting an inspection appointment to each affected water user. Any water user who cannot or will not allow an on-premise inspection of his piping system shall be required to install the backflow prevention device the Agency considers necessary.

Customer Notification – Device Installation

The Agency will notify the water user of the inspection findings and list any corrective actions to be taken. A period of 60 days shall be given to complete all corrective actions required, including installation of backflow prevention devices. A second notice shall be sent to each water user who does not take the required corrective actions prescribed in the first notice within the 60 day period allowed. The second notice shall give the water user a two week period to take the required corrective action. If no action is taken within the 2 week period the Agency may terminate water service to the affected water user until the required corrective actions are taken.

Annual Testing and Maintenance – Customer Notification

The Agency will notify each affected water user when it is time for the annual testing of the backflow prevention device installed on their service connection to be tested. This written notice will give the water user 30 days to have the device tested and supply the water user with the necessary form to be completed and resubmitted to the Agency.

If a user doesn't have a backflow prevention device tested within 30 days after the first notice, the Agency will send a second notice. The second notice will give the water user a two-week period to have their backflow prevention device tested. If no action is taken within the two-week period, the Agency may terminate water service to the affected water user until the device is tested.

Following the third notice, the Agency shall have the option (in place of disconnection) of performing the annual test and making minor repairs to the backflow device. The Agency shall notify the water user of the needed repair and provide a list of qualified backflow specialists who can repair the device. The device must be repaired within 30 days. The water user shall be billed for this service at the current charge out rate. The billing will be included on the regular water bill.

Water Service Discontinuance

General

When the Agency encounters water uses that represent a clear and immediate hazard to the potable water supply that cannot be immediately abated, the Agency shall institute the procedure for discontinuing the water service per Section 4205 of the Personnel and Administrative Manual.

Basis for Discontinuance

Conditions or water uses that create a basis for water service termination shall include, but are not limited to, the following items:

- Refusal to install a required backflow prevention device;
- Refusal to test a backflow prevention device;
- Refusal to repair a faulty backflow prevention device;
- Refusal to replace a faulty backflow prevention device;
- Direct or indirect connection between the public water system and a sewer line;
- Unprotected direct or indirect connection between the public water system and a system or equipment containing contaminants;
- Unprotected direct or indirect connection between the public water system and an auxiliary water system; or
- A situation which presents an immediate health hazard to the public water system.

List of Approved Backflow Prevention Device Testers

Persons who desire to have their names, company, and phone numbers placed upon the Agency's list of Approved Backflow Prevention Device Testers shall demonstrate competency in all phases of backflow prevention device testing and repair by submitting certification of the following minimum requirements:

Applicants shall have had at least two (2) years experience in plumbing or pipe fitting or equivalent qualifications.

Applicants shall hold a valid Backflow Prevention Device Testers certification from the American Water Works Association (AWWA) California-Nevada Section.

A tester of backflow prevention devices shall furnish evidence showing availability of necessary tools and equipment to properly test such devices and shall be responsible for the competency and accuracy of all tests and reports prepared.

All field work shall be completed and/or immediately supervised by the individual listed by the Agency. The Agency may remove the tester from the approved list at any time for improper testing, repairs and/or reporting.

SECTION 4
PLAN SHEET REQUIREMENTS

General

The plan sheet requirements contained in this section are applicable to improvements to be provided under the provisions of an FA.

Drawing Size and Scale

All improvement Plans shall be prepared using ANSI D (22"x34") inches in dimension. The horizontal scale shall be 1-inch = 20, 40, or 50 feet. The vertical scale shall be appropriate for the topography and the horizontal scale and approved by the Agency.

Drafting Standards

All line work must be clear and sharp with appropriate line type, line weight, shading to distinguish proposed, existing, topography, etc. Letters and numerals shall be 0.083 (1/12 inch, 6 point) inch minimum height if computer generated or 0.125 (1/8 inch, 9 point) inch if handwritten, well formed, and sharp.

Title Sheet

Each set of improvement Plans shall have a title sheet. The title sheet shall be prepared showing the following:

- The entire subdivision or project, including street names and property lines.
- A vicinity map drawn to a convenient scale.
- A north arrow and scale.
- A sheet index.
- A legend of symbols and abbreviations (use the Agency's standard symbols conforming with standard drawing S401).
- A title block.
- A signature block for Agency engineer, local fire protection district, and City/County as applicable.
- The Applicant's name, address, and phone number.
- The property owners name and address.
- A table listing the sizes, lengths, quantities, class, and material of pipe; number and sizes of water services; number and sizes of fire protection services; number of fire hydrants; and numbers and sizes of BOVs and AVRVs.
- AGENCY's standard note, below.

Placer County Water Agency Facilities

Placer County Water Agency facilities shall be constructed in accordance with the Agency's latest revised Standards. The Contractor shall provide two working days' notice to the Placer County Water Agency inspector (530-823-4885) prior to beginning work on Water Facilities and by 7:30 a.m. each day work on Water Facilities occurs. The Agency's approval of these Plans is for Water Facilities only. Undiscovered errors and omissions shall be corrected by others. Conflicts with other improvements shall be the responsibility of others.

Placer County Water Agency Map No. _____.

AGENCY Approval: _____ Date:_____

(This approval expires 24 months after the above date)

Title Block

Each sheet within the set of drawings shall have a title block showing the sheet title, sheet number, total number of sheets, date, scale, project name, revision block, and the design Engineer's name, address, phone number, registration number, seal, and signature.

Water System Layout Sheet

The proposed treated and raw water systems shall be shown on an overall plan layout at an appropriate scale. This layout shall show pipe size, valving, hydrants, existing facilities, canal names, spill location, boundary lines and found existing monuments, property lines, lot numbers, street names, section lines and corners, existing easements with recording data, and proposed easements. This layout must be incorporated into the improvement Plans and may be shown on the title sheet if it may be produced there legibly.

Plan Details

The following shall be shown on Plans submitted for approval:

Right-of-Ways- Right-of-way lines, the boundaries of lots fronting on the street, drainage easements, existing easements with recording data, proposed easements, planting easements, section lines and corners, land grant lines and temporary construction easements (existing and proposed), shall be shown on the Plans. All right-of-way and easement lines shall be properly dimensioned.

The Applicant shall provide a minimum 20-foot-wide, non-exclusive recordable easement to the Agency for all water lines and meters installed outside a public right-of-way or public utility easement adjacent to a public right of way. All easements granted to the Agency shall be on Agency forms. The easement forms format, legal description and plat shall be processed through an escrow agent. Construction of buildings and/or structures shall not be permitted within the Agency's easements. The easement will be recorded by the Agency.

Contours and Elevations - Show existing contours or supporting elevations, and the limits of grading, cuts and fills with finished elevations. Vertical control for profiles and benchmarks shall be based on the National Geodetic Vertical Datum, 1929 (NGVD 29). The horizontal control datum shall be California Zone II NAD 83 survey in feet.

Pipelines - For water facilities, the Plans shall show stationing, size of pipes, class or pressure rating, angle of pipe bends at fitting, valves, Blow-Off Valves (BOVs), Air/Vacuum Relief Valves (AVRVs), hydrants, services, backflow prevention devices, meters, location and length of restrained pipe, and all other appurtenances.

The meter size shall be indicated if the meter proposed is larger than 5/8" x 3/4". Call outs for services shall indicate the meter will be set by the Agency

Other Utilities - The Plans shall show all existing or proposed utilities within 20 feet of proposed or existing Agency facilities, including sewer lines and laterals, storm drain lines and laterals, gas, electric, cable and communications. The Plans shall indicate minimum horizontal and vertical clearances between Agency facilities and other utilities.

Profiles - The Plans shall show the corresponding profile of all roadway centerlines, drainage ditches, storm drains and sanitary sewers. All profiles of proposed improvements shall show elevations, percent grade, vertical curves and other vertical alignment data. The profile of pipelines shall show size, length, material, pressure rating and all fixtures such as BOVs, AVRVs, fire hydrants and valves. Profiles shall follow the pipeline stationing for accuracy. Where sewer laterals cross water lines, show the lateral at the elevation it crosses, material type and size.

Locations and lengths of restrained pipe shall be shown on either the plan view or the profile view.

Landscape Irrigation - Landscape plans shall have a single table listing all irrigation circuits and the maximum flow rate of each circuit in gallons per minute.

The Applicant provides to the Agency, AutoCAD files showing all existing and proposed property lines within the project with property lines placed by themselves on one of two layers, "EXISTING PLS", and "PROPOSED PLS".

[This page intentionally left blank.]

SECTION 5
SURVEYS, TOPOGRAPHIC MAPPING, AND CAD DRAWINGS

General

The requirements of this section apply to deliverables created and submitted specifically for the Agency.

Surveys and Topographic Mapping

All Surveys and Topographic Mapping submitted to PCWA shall use:

Horizontal Datum-California Coordinate System NAD83 California State Planes, Zone II, U.S. Survey Feet

Shall use Vertical Datum from the National Geodetic Vertical Datum of 1929 (NGVD29).

Shall be drawn in U.S. Survey Feet

Shall have a minimum of two (2) control points. Control points can be monuments, PK nails, 5/8 rebar or larger, something physical in the field that can be used to reestablish the survey submitted if required. The control points must be located within 200 ft. of the submitted survey and must be in clear view of each other. After the submittal of the survey, the physical location (site) and accuracy of the control points will be the responsibility of the Contracted Surveyor until the Project Engineer has signed off on the Survey/Topo in writing to the Contracted Surveyor.

CAD Drawings

All CAD Drawings created for PCWA:

Shall be compatible with AutoDesk's Land Desktop release 2007 or newer.

Shall be drawn according to the latest US National CAD standards.

Shall use PCWA Borders. Borders are available from the Agency's web site or by contacting the Agency's Engineering Division.

Shall be drawn at 1:1, full size in model space.

Shall be submitted in both digital format (CD) as a drawing (dwg.) file and a pdf file, and hard copy format (plotted).

Surveys and Mapping CAD drawings created for PCWA, also:

Shall include a point file with descriptions and coordinates in a comma separated values (CSV) file on the CD.

[This page intentionally left blank.]

Division 3 – Standard Specifications

[This page intentionally left blank.]

SECTION 1
PIPING AND PLUMBING

General

This section describes the materials and labor necessary for installation of treated and raw water pipelines, plumbing, and appurtenances. An acceptable products list is provided in Appendix E.

Pipelines 18 inches and larger are classified as transmission mains; smaller pipelines are distribution mains.

Materials

Joints

All new pressure piping systems shall be restrained by mechanical joint restraint or welded joints . Concrete thrust blocks shall only be used where shown on the drawings and as approved by the Agency. Concrete thrust blocks are required at connections to existing piping to protect against the movement of existing joints or fittings due to thrust forces. Where test pressure does not exceed 150 psi, concrete thrust blocks for pipe 12-inch and smaller shall be provided as shown on the Standard Drawings. All other thrust blocks shall be designed by a California registered engineer.

Restrained joints shall be rated for the greater of the pipeline's test pressure or its surge pressure. Install all restraining systems per the system manufacture recommendations. The location and minimum required development length shall be clearly identified on the Plans. All restraint systems calculations shall be stamped and signed by a California registered engineer.

Nuts and Bolts

Nuts and bolts shall be cadmium-plated or zinc-coated steel per ASTM A307 Grade A, hex or T-head, unless otherwise noted. Threads shall be coated with anti-seize lubricant. The bolt shall extend at least 3 threads through the nut when tightened to proper torque.

Joint Lubricants

Lubricants shall be as specified by the pipe manufacturer to ensure compatibility with the pipe and gasket material and shall comply with NSF 61 requirements.

Ductile Iron Pipe (DIP)

Pipe Material

DIP shall conform to AWWA C151 specifications. Higher pressure class shall be used where the working pressure or test pressure of the pipe exceeds the pressure class shown below. Joints between DIP and other types of pipe shall be made by means of the properly sized and correct type of restrained adapter. DIP shall be cement mortar-lined in accordance with AWWA C104 unless otherwise noted.

DIP Pipe Size (in.)	Pressure Class
6-12	350
16-20	300
24	200
30-60	150

Joints

DIP joints shall be push-on-type, mechanical, or flanged joints as shown on the Plans with gaskets furnished by the manufacturer of the pipe and designed for use with the pipe being installed and complying with AWWA C111. Provide fuel-resistant gaskets within 40 feet of property using or containing volatile materials.

Assembly of pipe and joints shall follow the manufacturer's instructions. After assembly of each push-on joint, the final location of gaskets within each joint shall be checked by feeler gauge as recommended by the manufacturer.

Restrained DIP shall be installed where shown on the Drawings, or as necessary to prevent the dislocation of the completed pipeline due to pressure. Restrained DIP shall be as described below. Gaskets with integral teeth used to restrain DIP such as "Field Loc" gaskets are not allowed.

Push-on Joint

Restrained push-on joint DIP shall be restrained at the joint by the use of a locking ring or some other type of mechanism designed by the pipe manufacturer as a restrained pipe joint.

Push-on joints without an integral locking system may be restrained by use of a joint harness. Joint harnesses shall be installed per manufacturer's recommendations, shall be fusion-bonded, epoxy-coated, and shall be polyethylene-encased.

Flanged Joint

Unless otherwise specified, flanges shall be cast-on flanges conforming to ANSI/ AWWA A21.10/C110 or thread-on ductile iron conforming to AWWA A2l.l5/C115. Flanges shall be adequate for 250 psi working pressure. Bolt circle and bolt holes shall match those of ANSI Bl6.1, Class 125 flanges and ANSI Bl6.5, Class 150 flanges. Where specified, flanges shall be cast-on or threaded-on flanges conforming to ANSI Bl6.1, Class 250.

Mechanical Joint

Mechanical joint pipe shall be restrained by use of locking rings with lugs that secure the ring to the pipe. Locking rings and lugs shall be fusion-bonded, epoxy-coated, and wrapped in polyethylene as part of the pipe.

Fittings

Fittings shall meet the design requirements of the adjacent pipe. All fittings shall be smooth and free from defects, made from ductile iron or fabricated steel, and shall be manufactured in accordance with AWWA C110, C111, C115 and C153. Steel fittings shall be fusion-bonded and epoxy-lined and -coated. Special fittings may be manufactured from steel pipe in accordance with AWWA C200.

Polyvinyl Chloride (PVC) Pressure Pipe

Pipe Material

PVC pressure pipe may be used in pipe sizes 4 to12 inches, shall conform to current AWWA C-900 (C.I.O.D.), and have Underwriters' Laboratories, Factory Mutual and NSF approval.

PVC Wall Thickness Selection	
Test Pressure (psi)	**Diameter Ratio (DR)/Class**
0-150	18/150
151-200	14/200
>200	Per Agency

PVC pipe shall not be installed if:

It has been discolored from exposure to the sun.

The installation date is more that one year after the manufacture date printed on the pipe.

The printed manufacture date has been altered or destroyed.

Joints

PVC pipe shall be joined by a push-on bell and-spigot configuration with a locked-in, flexible elastomeric gasket coupling or mechanical joints. All metallic parts and appurtenances shall be coated with coal tar mastic to a thickness of 16-30 mils.

Restrained PVC pipe shall be installed where shown on the Drawings or as necessary to prevent the dislocation of the completed pipeline due to pressure. Restrained PVC pipe shall be as described below.

Mechanical Harness

Metallic mechanical harnesses shall include bolt-on, bolt tightened wedges on the spigot side of a push-on joint tied together with a sufficient number of rods to prevent joint movement with proper installation.

Mid-Span Gland

Provide mid-span restraint split glands designed for use with PVC pipe where specified in the Drawings or where mid-span restraint is necessary to prevent pipe movement at unrestrained joints. Restraint split glands shall be fusion-bonded and epoxy-coated and shall depend on toothed wedges manufactured to limit point pressure on and damage to the pipe.

Mechanical Joint Adapter

Where plain-end PVC pipe is mated to a mechanical joint fitting, provide a mechanical joint follower gland with the same restraint characteristics and torque limiting provisions as the mid-span ring.

Fittings

Fittings shall be cast or ductile iron fittings lined and coated per DIP fitting requirements.

Steel Pipe

Two types of steel pipe shall be allowed for 12 to 60-inch diameters: concrete cylinder pipe (CCP) and mortar-lined steel (MLS) pipe.

Protection of Field-Welded Steel Pipe

Contractor shall comply with AWWA C206 to protect field-welded steel pipe from thermal stresses.

Strutting (Stulling)

Adequate strutting shall be provided on all specials, fittings, and straight pipe to avoid damage to the pipe and fittings during handling, storage, hauling, and installation for concrete cylinder pipe, as recommended by the Manufacturer. Any pipe damaged during handling, hauling, storage, or installation due to improper strutting shall be repaired or replaced. Struts shall not be removed until backfilled a minimum of 1 foot over pipe.

Concrete Cylinder Pipe (CCP)

The pipe shall conform to AWWA C303, subject to the following supplemental requirements. The pipe shall be provided complete with rubber gasket joints and all specials and bends.

Markings

The manufacturer shall legibly mark all pipes and specials in accordance with the laying schedule and marking diagram. Each pipe shall be numbered in sequence and said number shall appear on the laying schedule and marking diagram in its proper location for installation. All specials and fittings shall be marked at one end with top field centerline.

Handling and Storage

The pipe shall be handled by use of slings, padded cradles, or other devices to prevent damage to the pipe coating/exterior. Stockpiled pipe shall be supported on sand or earth berms free of rock exceeding three inches in diameter. The pipe shall not be rolled and shall be secured to prevent accidental rolling. All pipe handling equipment and methods shall be acceptable to the Agency.

Laying Length

Maximum pipe laying lengths shall be 40 feet, with shorter lengths provided as required by the Drawings.

Closures and Correction Pieces

Closures and correction pieces shall be provided as required.

Mortar

Materials for mortar shall conform to the requirements of AWWA C303, provided that cement for mortar coating shall be ASTM C150, Type II Low Alkali and mortar lining shall be ASTM C150, Type II Low Alkali. A fly ash or pozzolan shall not be used as a cement replacement. Admixtures shall contain no calcium chloride.

Steel for Cylinder and Fitting

Pipe manufactured under AWWA C303 shall have a minimum yield strength of 36,000 psi for the steel cylinder.

Steel Cylinder Pipe Cylinder Thickness Selection	
Pipe Inside Diameter, (in.)	**Minimum Steel Cylinder Thickness (in.)**
12-36	0.188
42-60	0.250

Specials and Fittings

Unless otherwise required by the Contract Documents, all specials and fittings shall be in accordance with AWWA C208, AWWA M9 and AWWA M11. Provide Concrete Cylinder Pipe in accordance with the pressure and loading conditions as noted on the drawings and per AWWA M9 design procedures.

Joint Design

The standard field joint shall be as shown on the Drawings and the following requirements:

Ends of the bell and spigot type for rubber gasket joints shall be steel end ring joint with spigot groove and O-ring gasket, equivalent to United States Bureau of Reclamation, Type R-2. The bell ring thickness and gaskets shall conform to AWWA C303. Rolled-groove gasketed spigots shall not be allowed.

Ends for mechanically coupled field joints and ends fitted with buttstraps for field welded joints shall conform to AWWA C200.

Ends of the lap-welded, slip-type, field-welded joints shall conform to AWWA C200 as modified here. The method used to form, shape, and size bell ends for lap-welded joints shall be such that the physical properties of the steel are not substantially altered. Unless otherwise approved by the Agency, bell ends shall be formed by an expanding press or by being moved axially over a die in such a manner as to stretch the steel plate beyond its elastic limit to form a truly round bell of suitable diameter and shape.

Flanges shall have flat faces and shall be attached with bolt holes straddling the vertical axis of the pipe unless otherwise shown. Attachment of the flanges to the pipe shall be by welding and conform to the applicable requirements of AWWA C207. Flanges for miscellaneous small pipes shall be in accordance with the standards specified for these pipes. Where the design pressure is 150 psi or less, flanges shall conform to either AWWA C 207 Class D or ASME B16.5 150-lb class. Where the design pressure is greater than 150 psi, up to a maximum of 275 psi, flanges shall conform to AWWA C 207 Class E, Class F, or ASME B16.5 150-lb class. Where the design pressure is greater than 275 psi up to a maximum of 700 psi, flanges shall conform to ASME B16.5 300-lb class.

Restrained Joint

Restrained joints shall be field-welded joints, either single (inside or outside lap-weld) or butt-straps as indicated on the Drawings.

Cement-Mortar Lining

Unless indicated otherwise, interior surfaces of all pipe shall be cleaned and lined in the shop with cement-mortar lining applied centrifugally per AWWA C303.

Defective linings shall be removed from the pipe wall and shall be replaced to the full thickness required. Defective linings shall be cut back to a square shoulder to avoid feather-edged joints.

Protection of Pipe Lining/Interior

For all pipe and fittings with plant-applied cement-mortar linings, the Contractor shall provide a bulkhead of polyethylene or other suitable material on the ends of the pipe and on all special openings to prevent drying out of the lining. All bulkheads shall be substantial enough to remain intact during shipping and storage until the pipe is installed.

Exterior Coating

Exposed Piping

The exterior surfaces of above-ground mortar/cement coated pipe shall be cleaned.

Buried Piping

All pipe for buried service, including permanent bumped heads, shall be coated with a minimum thickness of cement-mortar coating per AWWA C303. Unless otherwise indicated, exterior surfaces of pipe or fittings passing through structure walls shall be cement-mortar coated from the center of the wall or from the wall flange to the end of the underground portion of pipe or fitting.

Pipe Appurtenances

Access manholes with covers shall be as indicated, installed during fabrication, not in the field. Threaded outlets shall be forged steel suitable for 3000-psi service.

Mortar-Lined Steel (MLS) Pipe

Mortar-lined and mortar-coated steel pipe shall conform to AWWA C200 and C205, subject to the following supplemental requirements. The pipe shall be of the diameter and class indicated, shall be provided complete with rubber gasket joints if they are indicated in the Contract Documents, and shall be provided with all specials and bends as required. For pipe 14 inches in diameter and larger, the nominal inside diameter after lining shall not be less than the diameter shown on the Drawings, allowing for tolerances according to AWWA C200 and C205.

Markings

The manufacturer shall legibly mark all pipes and specials in accordance with the laying schedule and marking diagram. Each pipe shall be numbered in sequence and said number shall appear on the laying schedule and marking diagram in its proper location for installation. All specials and fittings shall be marked at one end with top field centerline.

Handling and Storage

The pipe shall be handled by use of slings, padded cradles, or other devices designed and constructed to prevent damage to the pipe coating/exterior. The use of equipment that might injure the pipe coating/exterior will not be permitted. Stockpiled pipe shall be supported on sand or earth berms free of rock exceeding 3 inches in diameter. The pipe shall not be rolled and shall be secured to prevent accidental rolling. All pipe handling equipment and methods shall be acceptable to the Agency . The Contractor shall be fully liable for the cost of replacement or repair of pipe that is damaged.

Laying Lengths

Maximum pipe laying lengths shall be 40 ft with shorter lengths provided as required on the Drawings.

Closures and Correction Pieces

Closures and correction pieces shall be provided as required so that closures may be made due to different headings in the pipe laying operation and so that correction may be made to adjust the pipe laying to conform to pipe stationing indicated.

Mortar

Materials for mortar shall conform to the requirements of AWWA C205, provided that cement for mortar coating shall be Type II and mortar lining shall be Type II. A fly ash or pozzolan shall not be used as a cement replacement. Admixtures shall contain no calcium chloride.

Steel for Cylinder and Fittings

Pipe manufactured under AWWA C200 shall have a minimum yield strength of 36,000 psi for the steel cylinder.

Specials and Fittings

Unless otherwise required by the Contract Documents, all specials and fittings shall be in accordance with AWWA C208 and AWWA M11 and coated as specified above.

Design of Pipe

The pipe shall be manufactured, tested, inspected, and marked according to applicable requirements previously stated and, except as hereinafter modified, shall conform to AWWA C200.

Joint Design

The standard field joint shall be as shown on the Drawings and the following requirements:

Ends of the bell and spigot type for rubber gasket joints shall conform to AWWA C200 and the pipe ends for 36" diameter and larger shall employ steel joint rings (Carnegie style spigot with weld-on bell ring). All joints used shall have been thoroughly tested for sealing water. Drawings of the type of pipe joints used shall be submitted as part of the shop drawings. The exposed inside and outside surface of the joints shall be protected with an epoxy coating applied at the time of manufacture.

Ends for mechanically coupled field joints shall conform to Section 4.13.1 of AWWA C200. Ends fitted with butt straps for field welded joints shall conform to AWWA C200.

Ends of the lap-welded slip type for field welded joints shall conform to Section 4.13.2 of AWWA C200 and as modified here. Unless otherwise approved by the Agency, bell ends shall be formed by an expanding press or by being moved axially over a die to stretch the steel plate beyond its elastic limit to form a round bell of suitable diameter and shape. Bells shall not be formed by rolling.

Plain ends fitted with flanges shall conform to AWWA C200 Section 4.13.7 and AWWA C207.

Restrained Joints

Restrained joints shall be field-welded joints, either single (inside or outside lap-weld) or butt-straps as indicated on the Drawings.

Lining

Lining shall be centrifugally spun in pipes and specials in conformity with AWWA C205. The lining thickness shall be as follows, with a tolerance of plus 0.25 inch and minus zero.

Nominal Pipe Diameter (in.)	Lining Thickness (in.)	Concrete Cylinder Pipe
4-12	5/16	1/2
13-16	3/8	1/2
>16	1/2	3/4

Defective linings, as determined per AWWA C205, shall be removed from the pipe wall and shall be replaced to the full thickness required. Defective linings shall be cut back to a square shoulder in order to avoid feather edged joints.

Protection of Pipe Lining/Interior

For all pipe and fittings with plant-applied cement-mortar linings, the Contractor shall provide a polyethylene or other suitable bulkhead on the ends of the pipe and on all special openings to prevent drying out of the lining. All bulkheads shall be substantial enough to remain intact during shipping and storage until the pipe is installed.

Exterior Coating

Exposed Piping

The exterior surfaces of pipe which will be exposed to atmosphere inside structures or above ground shall be cleaned and coated per Section 5, Painting and Coating.

Buried Piping

All pipe for buried service, including permanent bumped heads, shall be coated with a 3/4-inch minimum thickness of reinforced cement-mortar coating. Unless otherwise indicated, exterior surfaces of pipe or fittings passing through structure walls shall be cement-mortar coated from the center of the wall or from the wall flange to the end of the underground portion of pipe or fitting.

Contractor shall provide spiral wire or welded wire fabric reinforcement in accordance with AWWA C205. Welded wire fabric shall be securely fastened to the pipe with welded steel clips or strips.

For fittings and specials with an earth cover of less than 10 feet, the reinforced concrete coating shall be a minimum of 4 inches in thickness. Supplemental reinforcement shall be provided and shall consist of cages of reinforcing steel designed for external loads and with a minimum reinforcement steel area ratio of 0.002 in both the circumferential and longitudinal directions.

For fittings and specials with an earth cover of 10 feet or greater, the selected reinforced concrete coating shall result in a special wall thickness equal or greater than 4 inches or to that of the adjacent pipe, whichever is greater. The coating shall be reinforced as described above, and shall be either shop cast or field cast as an encasement.

The supplemental external reinforcement, with the concrete coating or encasement as described above, shall be used for all buried fittings and specials regardless of the ability of the steel cylinder to carry earth loads.

Pipe Appurtenances

Access manholes for 24" and larger pipe shall be spaced at a maximum 1,000-foot interval or as indicated on the Drawings. Install manholes during pipeline fabrication, not in the field.

Threaded outlets shall be forged steel suitable for 300-psi service.

Fusion-Welded High Density Polyethylene (HDPE) Pipe

Fusion-welded HDPE pipe supplied under this specification shall have a nominal Iron Pipe Size (IPS) outside diameter and be smooth-walled and manufactured in accordance with ASTM D3261 and PPI Designation PE3408 unless otherwise specified. The Standard Dimension Ratio (SDR), and/or the pressure rating of the pipe supplied shall be as specified by the Agency.

The pipe shall contain no recycled compound except that generated in the manufacturer's own plant from resin of the same specification from the same raw material. The pipe shall be homogeneous throughout and free of visible cracks, holes, voids, foreign inclusions, or other deleterious defects, and shall be uniform in color, density, melt index and other physical properties throughout.

Fittings

Fittings shall be of HDPE manufactured in accordance with ASTM D3261.

Joining

Sections of HDPE pipe shall be joined into continuous lengths on the jobsite above ground by butt fusion method performed in accordance with the pipe manufacturer's recommendations. Socket fusion shall not be used. Extrusion welding or hot-gas welding of HDPE shall not be used.

Transitions

All transitions from HDPE pipe to another pipe material or outside diameter pipe material shall be manufactured specifically to match the outside diameters of the two pipes and shall have a pressure rating at least equal to the larger pressure rating of the two pipes. The coupling shall be welded to the HDPE pipe as above.

Pipe Packaging, Handling, and Storage

The manufacturer shall package the pipe in a manner designed to deliver the pipe to the project neatly, intact, and without physical damage.

Pipe shall be stored and stacked on clean, level ground to prevent undue scratching or gouging of the pipe in accordance with the pipe manufacturer's recommendations. The pipe shall be handled so that it is not damaged by dragging over sharp objects or cut by chokers or lifting equipment. Pipe cut or gouged in excess of 10 percent of the pipe wall thickness shall be cut out, and the cut ends fused together.

Treated Water Service Piping

All service lines, valves, and fittings shall comply with AWWA C800.

Two-inch service piping shall have a two-inch gate valve with two-inch square operator nut accessible through a valve box at the main.

Meters three inches and larger shall have bypass piping with lockable shutoff valves around the meter.

Where required by the Agency, meters on services requiring uninterrupted water supply smaller than three inches shall have bypass piping equal in size to the service piping.

Drilling Service Taps

Service taps shall be drilled such that the entire plug and remains are extruded from the pipe. Small service taps are not permitted on pipes larger than 20 inches without written consent from the Agency.

Service Piping Types

Copper and Brass Pipe

Copper pipe shall be Type K, hard or soft, in conformance with ASTM 1388. All joints to saddle shall be inspected by the Agency before backfilling. Joints shall be bronze compression connections. When soldered fittings are used, the solder and fittings shall be lead-free and approved for potable water service. All 1- and 2-inch service pipes shall be one continuous pipe.

Polyvinyl Chloride Pipe (PVC)

Two-inch-diameter PVC pipe shall be Schedule 80, and shall conform to ASTM D1784 for rigid PVC compounds, have NSF approval, and shall conform with commercial standard 256 and ASTM D2241.

Pipe shall be manufactured to Iron Pipe Size (IPS) dimensions and shall be furnished in minimum standard lengths of 20 feet. Four-inch and larger diameter PVC shall conform to the most current AWWA C900.

All chemical feed piping three-inch and smaller shall be Schedule 80 PVC as specified in this section.

All PVC fittings shall be molded and manufactured of the same material as the adjacent pipe, suitable for either solvent-weld or screwed connections. Solvent-weld-type couplings and fittings shall be rated for pressures greater than that of adjacent pipe and shall be of a type recommended by the pipe manufacturer.

Polyethylene (PE)

PE pipe shall conform to AWWA C-901, Standard designation PE 3408, SDR 9, Class 200 and shall be copper tube size.

Valves and Appurtenances

Valves shall open counterclockwise. Buried valves shall have a non-rising stem on the actuator and a 2-inch-square operating nut accessible through a valve box. Unless otherwise noted, above-ground valves shall have outside stem and yolk (OS&Y), rising stem.

Four-inch and larger valves shall be flanged. Valves installed above ground shall be lever-operated through 8 inches, handwheel-operated for larger sizes. Handwheels shall have a minimum diameter of 18 inches and be fastened to the operating shaft with a cotter pin for easy removal.

Interior ferrous surfaces shall be factory fusion-bonded and epoxy-coated to a minimum thickness of 8 mils per AWWA C550. Exterior ferrous surfaces shall be factory-coated with a minimum thickness of 8 mils of fusion-bonded epoxy per AWWA C213.

Corrosion Control

See Section 7 - Corrosion Control for corrosion protection for pipes and appurtenances.

Waterline valves

Treated water valves 2 to 8 inches in diameter shall be gate type. Butterfly valves shall be used on larger pipe.

Raw water valves shall all be gate valves.

Gate Valves

Gate valves 2 to 8 inches in diameter shall be resilient-seated wedge type, 200 psi water, oil or gas (WOG) rated, and conform to AWWA C509.

Gate valves 1 ½ inches and smaller shall be bronze, handwheel- or lever-operated, with non-rising stem, 200 psi, WOG rated.

Butterfly Valves

All butterfly valves shall be rubber-seated, conforming to AWWA C504. Valves shall be short-body type.

Valve discs shall be an offset design to allow 360° seating and shall be constructed of alloy cast iron, ASTM A436 Type 1 (Ni-Resist). Butterfly valves shall be manually operated with a two-inch operating nut through an actuator complying with the "Gear Actuators" section below. Butterfly valves shall have the rubber seat in the body.

Where a butterfly valve is adjacent to a capped pipe, provide enough pipe between valve and cap to allow complete movement of the valve (at least three feet).

Air Vacuum Release Valves (AVRV)

AVRV's shall incorporate combination valves with bronze or stainless steel trim and shall be rated for at least the pressure rating of the adjacent pipe. As directed by the Agency provide an easily accessible isolation valve upslope of all AVRV's.

Size AVRV's per these Standards or as shown on the Plans. See Standard Drawings for box dimensions and positioning.

Submit engineering calculations for each AVRV installed on steel pipe demonstrating the adequacy of the valve to prevent pipe failure. Unless otherwise shown, on other pipe types, provide 1 inch AVRV on line sizes up to 12 inches; 2 inch AVRV on line sizes 14 inches to 18 inches; and 3 inch AVRV on line sizes 20 inches to 30 inches. For line sizes larger than 30 inches, the AVRV size shall be determined by a professional engineer registered in California or as shown on the Plans.

Locate AVRV's at all high points of waterlines. Provide AVRV's on constant-slope pipelines on at least 1,000-foot intervals.

Air vent enclosures

Above-grade air vent enclosures for AVRV's shall be composed of a minimum of 3/16-inch thick, 8-inch square tube stock with weld-on steel cap. When assembled and galvanized or coated and installed, the enclosure shall provide at least as much open area as the AVRV outlet pipe. The assembly shall bolt onto AVRV cover lids.

Raw water AVRVs shall be designed and manufactured for wastewater applications.

Ball Valves

Ball valves shall be metallic or plastic as described below with a minimum pressure rating equal to that of the adjacent pipe.

Metallic Ball Valves

Ball valves 2 inches and smaller and used in steel or copper piping systems shall have a bronze body and stem and Teflon coated ball and seating.

Plastic Ball Valves

Plastic ball valves used in PVC piping system shall be PVC, normal impact, with Teflon seat ring. Valves two inches and smaller shall be provided with union-type end connections and stub ends designed for socket welding. Larger valves shall be flanged.

Globe Valves

Globe valves 3 inches and smaller shall have a bronze body with a replaceable composition disc. Valves shall be globe or angle pattern, as required. Larger globe valves shall be cast-iron body with yoke bonnet and bronze trim. Globe valves shall have a minimum working pressure of 200 psi.

Automatic Control Valves

Automatic control valves include pressure reducing, pressure relief, pressure sustaining, rate of flow, surge anticipation, and altitude valves. Unless otherwise approved by the Agency, all automatic control valves shall be diaphragm-actuated, pilot-controlled type and shall have globe style body, stainless steel trim, and V-port seating. The pilot system shall include pilot line wye-strainers with blow-offs, opening and closing speed controls, position indicator, and pilot system isolation cocks. Minimum pressure rating shall be 150 psi.

Pressure Reducing Valves

Pressure reducing valves 2 inches and smaller shall be bronze body with stainless steel trim, self-contained, direct-acting, high-capacity type with a built-in stainless steel strainer, have an adjustable outlet pressure setting, and be fully repairable in line.

Pressure reducing valves larger than 2 inches shall be combination reducing/sustaining type.

Pressure Relief Valves

Unless otherwise noted, submit calculations for approval by the Agency showing the valve's capacity to limit water velocity changes to less than one foot per second on valve closure.

Altitude Valves

Altitude valves shall include a single seat and a resilient disc for tight closure. If required by system hydraulics, the valve shall be the two-way flow type. For applications of altitude valves in which the differential pressure exceeds the manufacturer's cavitation chart limit, an orifice plate shall be installed downstream of the valve to dampen the cavitation per the manufacturer's recommendations.

Swing Check Valves

Swing check valves 1-1/2 inches and smaller shall be all bronze, with a regrinding-type disc and seat designed for a working pressure of 150 psi.

Swing check valves for waterlines two inches and larger shall be iron body, brass trimmed, designed for a working pressure of not less than 350 psi. They shall be of the balanced, swing gate-type with a clear opening at least equal to that of the connecting pipe and a rubber flap unless otherwise specified, and shall have an external lever and counter weight.

Valve Boxes

Valve boxes shall be provided for all underground valves and shall be precast concrete, traffic valve boxes. Lids shall be traffic-rated cast iron as noted on Plans with "WATER" cast into the surface.

Valve Riser Extensions

Use 8-inch diameter PVC water pipe conforming to AWWA C900 or SDR 35.

Locking Valve Boxes

Where specified, modify valve boxes as shown on Standard Drawing S107 to accept a valve box locking device. These devices shall be manufactured of stainless steel parts, shall be easily accessible and removable by hand, shall be anchored to the side of the valve box to prevent loss into the valve well, shall include a tag for written identification or note, shall lock with a common padlock, and shall block access to the valve actuator or valve stem riser. The Agency shall provide the padlock for locking valve boxes.

Raw water valves

Raw waterline valves shall be gate type, manufactured and installed as for treated water. Valves shall have a smooth inside bore on the bottom half so that sediment cannot accumulate. Air-vacuum release valves shall be designed and manufactured for wastewater installation.

Gear Actuators

Unless otherwise noted, gear actuators shall be provided for the following:

Butterfly valves

Buried valves that have the operating shaft mounted horizontally

Where specified or shown

Where a lever or wheel operator effort would otherwise be greater than 40 foot -pounds of torque or 40 pounds of force at the rim of the wheel or lever under any operating condition

Gear actuators shall be of the traveling nut type with the output shaft perpendicular to the valve shaft. Above grade gear actuators shall have a removable hand wheel mounted on the output shaft. Unless otherwise specified, the gear actuators shall conform to AWWA C504 and shall be certified.

Actuators shall be capable of being removed from the valve without dismantling the valve or removing the valve from the line.

Threaded rod and traveling nut shall be machine-cut steel designed for smooth operation. Lever or slot mechanism shall be constructed to eliminate the possibility of slipping and jamming.

Manual input effort to the handwheel shall be a maximum of 40 foot pounds for operating the valve from full open to full close, under any operating conditions. Above grade gear actuators shall indicate valve position and have adjustable stops. Maximum handwheel size shall be 18 inches in diameter.

Tapping Sleeves/Saddles

Tapping sleeves shall be 304 stainless steel, including the flange, nuts, and bolts, and shall include a full circumferential gasket and a tapped test outlet and plug. Flanged gate

valves shall be used for hot-tapping waterlines. Gate valves shall conform to gate valves in these Standards.

Tie-in Sleeves and Couplings

Complete tie-ins with restrained ductile iron mechanical joint sleeves. Mechanical joint sleeves must be at least 12 inches long. Bolting and gaskets shall conform to the requirements for the pipe to which the sleeve is attached.

Tie-ins to many pipe materials prohibit the use of sleeves. In these cases, use fusion-bonded, epoxy-coated flexible couplings manufactured for the types and sizes of pipes being connected and with the gaskets required by the manufacturer. Because these flexible couplings cannot be restrained on the pipe, restrain the pipe through other means.

Tie-in sleeves and couplings shall have a minimum pressure rating of 150 psi.

Flange Gaskets

Gaskets for flanged joints shall be full-faced, compressed sheets of aramid fiber base, with nitrile or neoprene binder and non-stick coating, suitable for temperatures to 700 degrees F, a pH of one to eleven, and pressures to 1,000 psig. Gaskets shall be 1/16-inch thick for flange sizes up to 24 inches, and 1/8-inch thick for sizes greater than 24 inches.

Blind flanges shall have gaskets covering the entire inside face of the blind flange and shall be cemented to the blind flange.

Hydrants

Hydrants shall be installed per Standard Drawings, as designated on the Drawings, and as specified here.

Provide a six-inch resilient seat gate valve on the lateral at the tee from main with every hydrant. All hydrant piping shall be restrained from hydrant tee to hydrant bury.

Hose nozzles shall be threaded-in, with one 4 ½-inch-diameter pumper outlet and two 2 ½-inch hose outlets having National Standard Fire Hose Coupling Screw Threads conforming to AWWA/ANSI C502 or as otherwise specified. Operation nut shall be National Standard bronze 1 ½-inch pentagon. The hydrant nozzle caps shall be securely chained to the body.

Hydrant main valve shall be a minimum 5 ¼-inch diameter, shall open CCW, with bronze-to-bronze seating. All bolts, nuts, and washers in the hydrant shall be Series 300 stainless steel.

Wet Barrel

Wet-barrel hydrants shall conform to AWWA C503. The bury shall have mechanical joint inlet for connection to the six-inch-diameter DIP hydrant lateral. Hydrants are to be furnished with drain openings plugged to the base.

Dry Barrel

Dry-barrel hydrants shall conform to AWWA C502, and shall be compression type with safety flange and safety stem coupling above the ground line for repair without shutting off the water. Operating mechanism shall be automatically lubricated from a sealed, self-contained lubricating reservoir.

Service Saddles

Service saddles shall be 85-5-5-5 bronze construction with wide stainless steel strap and iron pipe thread with a minimum pressure rating of 150 psi. Service saddles for asbestos cement pipe, CIP, DIP, and steel pipe shall be double strap bronze type. Maximum service tap and saddle size is 2 inches. Larger services require installation of tees in main.

Meter Boxes

Meter boxes shall be sized for the meter and appurtenances plus at least three inches of clearance between box wall and appurtenances. Meter boxes shall also be constructed and installed to resist typical traffic for the installation site, with a minimum of H20 load rating except where noted otherwise. All meter boxes shall be a minimum of six inches apart (outside to outside).

Angle Meter Stops

Angle Meter Stops shall be 85-5-5-5 bronze construction. Inlet shall be compression or similar non-proprietary system approved by the Agency, with a meter coupling nut outlet and locking wing. For 1 ½- or 2-inch meters, provide two-inch angle meter stops with double-drilled or slotted flanges.

Meter Box Lids

All meter box lids for 2 inch and smaller meters shall be made of Polymer cement composite material (non-concrete). All meter box lids for 3 inch and larger shall be aluminum with spring assist lid, lockable, with drain.

Meter boxes are not permitted in sidewalks, driveways and/or parking areas.

Corporation Stops

Corp stops shall be ball valves manufactured from 85-5-5-5 brass, ASTM B62, with a male iron pipe thread inlet and compression outlet for copper tubing. Corp stops shall be provided on services as large as two inches unless otherwise specified.

Pressure Gauges

Pressure gauges shall be rated for service intended, including negative pressure (vacuum gauge or compound gauge).

Unless otherwise noted, pressure gauges shall be glycerin-filled stainless steel Bourdon type with a 4½-inch-diameter black alumalite case. Maximum working pressure rating shall be 75 percent of maximum gauge pressure. Pressure range and calibrations shall be as required for site specific applications. The dial shall be engraved with the units in which the gauge is calibrated. All pressure gauges shall be equipped with shutoff and bleed cocks.

Flexible Couplings

Flexible couplings shall have a minimum pressure rating equal to the pipe class. Care shall be taken to see that smooth surfaces have been provided on the pipe so that the coupling can be properly fitted. Coupling shall be fusion-bonded epoxy-coated with stainless steel nuts and bolts unless otherwise specified. Couplings shall be the minimum length shown in the table below.

Pipe Size (in.)	Min. Coupling Length (In.)
¾ - 2 ½	5
3 - 4	8
6 – 24	12
>24	16

Expansion Joints

All piping subject to expansion and contraction shall be provided with sufficient means to compensate for such movement, without excessive forces imposed on equipment or structures. This may be accomplished with expansion loops, bellows-type expansion joints, or sliding-type expansion joints, as indicated.

Expansion joints shall be stainless steel, monel, rubber, or other materials best suited for each individual service.

Contractor shall submit detailed calculations and manufacturer's shop drawings that guarantee satisfactory performance of all proposed expansion joints, piping layouts showing all anchors and guides, and information on materials, temperature and pressure ratings. Minimum pressure rating shall be that of the adjacent pipe class.

Locating Wire and Tape

Direct-bury insulated copper cable, 10 AWG. THHN shall be taped to the top of all pipe except 1- and 2-inch service piping at 5-ft. intervals with duct tape before backfilling. The pipe shall be clean and dry before the tape is applied. The cable shall be procured from the vendor, complete with an approved epoxy splice kit. Cable joints shall be spliced in accordance with the manufacturer's instructions to form a set of continuous electrical conductors throughout the pipe system or lacking these per Standard Drawings. Where pipe branches occur, the cable shall be branched so that cable surfaces at each valve, fire hydrant, blow-off, air/vacuum release valve, backflow prevention device, or other facility. Twelve-inch-wide, blue, waterline warning tape with the phrase, "CAUTION: WATER" printed in permanent, 4-inch-high letters shall be installed with all piping, including service lines, as shown on Standard Drawing S101.

Water Facility Markers

Markers shall be blue, flexible, dual-sided posts made of composite materials formed into a flat web protected by two ribs on the marker edge. Marker decals/printing and posts shall be resistant to vandalism, impact, ultraviolet light, and extreme temperature changes and guaranteed against fading, breakdown, and defects for at least 15 years. Water facility markers shall be installed in all unpaved areas as detailed in the Standard Drawings.

Backflow Devices

All backflow prevention assemblies shall be installed in accordance with AGENCY Improvement Standards, Division 2, Section 3, "Cross Connection Control" and as detailed in the Standard Drawings.

Inlet and Outlet Structures

All inlet and outlet structures shall be constructed of reinforced concrete. Also see Div.2, Sect. 2, Inlet & Outlet Structures.

Trash racks

Trash racks shall be of all welded construction made from 1 ½ inch schedule 40 galvanized steel pipe. Damaged or inadequate zinc coatings shall be repaired before Agency acceptance.

Trash boxes shall be provided at all trash racks.

Execution

Installation and Testing

Quality Control

The Contractor shall use appropriate quality control procedures to ensure that all pipe and fittings shall be of the first grade and quality conforming to these Specifications. Pipe shall be stored and transported in a proper manner and kept clean after delivery to the job site. All work on pipe shall be performed in a skillful and professional manner.

Excavation

Conduct excavation per Division 3, Section 3 - Earthwork of the Standard Specifications.

Laying Pipe

Pipe shall be placed and joined in accordance with manufacturer's and/or Agency's directions as specified. Necessary equipment including slings shall be provided for lowering and properly placing pipe sections into trench without damage.

Each section of pipe shall be thoroughly cleaned before it is lowered into the trench.

If clean pipe sections and fittings cannot be placed in the trench without getting dirt into open pipe, the Agency may require a piece of material be secured over the ends of the pipe or fitting until it has been lowered into position in the trench. After the pipe has been lowered into the trench, all foreign matter shall be completely brushed from the pipe ends before assembly.

The pipe shall be cut to provide closure pieces of correct lengths to permit the proper location of the pipe sections, or to locate valves, fittings, and appurtenant structures where specified on Plans.

The pipe and fittings shall be placed to the lines and grades specified on Plans, and centered in the trench. All pipe to be placed upgrade for grades in excess of 10 percent.

Trenches must be kept dry until pipe has been placed, joints closed and backfill completed to a depth of 1 foot above top of pipe. Crushed rock for drainage and/or bedding shall be provided as shown in the Standard Drawings.

Temporary, water-tight plugs shall be provided for closure of the open ends of the pipelines each time pipe-laying activity stops and at the end of each working day to prevent the entry of dirt and/or other contaminants.

Gravity-flow raw water piping shall have a straight alignment and uniform grade between manholes. Accept as approved by the Agency.

Bedding and Backfill Placement

Bedding and backfill in pipe trenches shall be of the type, placement and compaction as shown in the Standard Drawing S101 and as specified in Standard Specifications, Division 3, Section 3.

Connections to Existing Pipelines

System Shutdowns

When deemed necessary by the Agency, shutdowns of existing in-service pipeline and other distribution facilities shall be made by the Agency as necessary to complete pipeline connections. A shutdown shall be for as short a period as possible and shall be scheduled by the Agency. The amount of lead time necessary for shutdown and connection to existing mains varies with each job and must be planned accordingly. In no case shall a shutdown and/or connection be scheduled with less than 11 days' notice to the Agency. Make no connections to existing pipes prior to passing pressure and disinfection tests. Interference with the operation of the Agency's distribution system shall be kept at a minimum. While an existing pipeline is shut down, the connection work shall be performed without interruption, continuing after regular working hours until completed, if necessary unless otherwise directed by the Agency. In some cases, shutdowns must occur at times other than normal working hours and/or days.

In all cases, shutdowns shall be made in conformance with the requirements of the Agency. The Agency shall operate all valves in making a shutdown, restoring pressure to the existing main, and initiating pressure to a new installation.

The Agency shall be notified at least 11 working days prior to any connection operations.

General Connections

All connections to existing pipelines shall be made as shown on the Plans and per the Agency Engineer.

Where the existing main is provided with fittings for connecting to the new main, the face of the connection shall be clean and free of all foreign materials. The Contractor shall remove the plug, cap or blind flange, clean the ends, disinfect, and make the new joint.

Where the existing main is not provided with fittings for connecting to the new main, connections shall be made either by hot tap or by cutting and inserting sections of pipe and fittings, as shown on the Plans or as directed by the Agency.

Hot Tap Connections

All hot taps shall be witnessed by the Agency Inspector. After installation and prior to cutting into the existing pipe, hot tap installations shall be air tested at 50 psi for 5 minutes with no leakage.

At the successful completion of the hot tap, protect the tapping sleeve and main.

Steel main

Wrap the tapping sleeve in WWF 0.5 x 0.5 W O.1 x W O.1 secured to the sleeve by stainless clamp at the throat. The entire sleeve shall then be coated in mortar to a minimum thickness of two inches, allowed to set, then backfilled.

DIP, PVC main

Wrap the tapping sleeve in polyethylene encasement per AWWA C105 and the Corrosion Control section, then backfill.

Pipeline Abandonment

Boxes, vaults, and test stations associated with the pipeline must be removed to at least 24 inches below final grade, and any remaining structure shall be filled with sand compacted to at least 90 percent of maximum dry density.

Unless otherwise instructed, the Contractor shall return all valves, meters, and test stations to the Agency. The remaining material and appurtenances from main abandonment shall be disposed of by the Contractor at no additional cost to the Agency.

Removal

Pipeline removal shall not disturb other utilities. Excavate the pipeline completely before obtaining Agency approval for removal. Backfill the pipeline trench per standard trench section up to the initial backfill in the Standard Drawings.

Abandonment in place

Pipelines 12" and larger, or within 25 feet of roads, other paved surfaces, structures, or foundations, or at Agency request shall be filled with two-sack slurry in a manner to ensure no voids remain at the conclusion of the process.

Pipelines 8 inches in diameter and smaller shall be abandoned by plugging the pipe ends with at least 12 inches of concrete.

Hydrostatic Testing

Prior to pressure testing, pipelines shall be cleaned of all debris, construction materials, dirt, and any other materials not suitable for inclusion in the completed pipeline. The Contractor shall provide all labor, equipment, and materials required for filling and testing the pipelines. Cleaning shall conclude with water flushing, performed so that the velocity of flushing water is at least 2.5 feet per second in the pipeline to be tested.

Contractor shall test all pipelines either in sections or as a unit. No section of the pipeline shall be tested until all field-placed concrete, thrust blocks, and mortar have aged at least 14 days.

Backfill shall meet and pass all compaction requirements and subgrade shall be completed to the Agency's satisfaction prior to hydrostatic testing. The Agency shall be notified 48 hours prior to testing and must approve any water placement in any portion of the pipeline. The test shall be made by closing valves when available, or by placing temporary bulkheads in the pipe and filling the line slowly with water and evacuating all air. Do not test against closed valves connected to a potable water system.

After the pipeline or section thereof has been filled, it shall be allowed to stand with a pressure of 2-20 psi for at least 24 hours to allow the concrete or mortar lining, if applicable, to absorb water and allow the escape of air from any air pockets. During this period, bulkheads, valves, and connections shall be examined for leaks. If leaks are found, corrective measures satisfactory to Agency shall be taken.

Pressure Pipelines

Hydrostatic Testing – backfill shall meet and pass all compaction requirements, all underground utilities shall be installed, and subgrade shall be completed prior to hydrostatic testing. The Inspector shall be notified forty eight (48) hours prior to testing and must approve any water placement in any portion of the pipeline. The pipeline shall be filled with water and all air evacuated.

For raw and treated water lines, the test pressure shall be 150 psi or 150 percent of static pressure, whichever is greatest. Maintain the test pressure for at least 2 hours.

The test pressure shall be measured at the highest point of the pipeline section being tested. If other test pressures are indicated on the Drawings, the requirement that yields the greatest test pressure shall be used. The amount of water introduced into the pipeline to maintain the test pressure shall be measured volumetrically using a calibrated test reservoir. Accurate means shall be provided for measuring the quantity of water required to maintain full pressure on the line for the test period.

Leakage shall be considered as the total amount of water pumped into the pipeline during the test period. The allowable leakage is zero.

The allowable leakage for welded steel pipe shall be zero gallons.

The allowable leakage for buried piping having threaded, brazed, or welded (including solvent welded) shall be zero gallons.

Exposed pipe, and pipe with welded, flanged, or coupled joints shall have no leakage.

Gravity Piping

Test pressure shall be a minimum of 150psi, 150 percent of static pressure or 150 per cent of surge pressure, whichever pressure is the greatest (independent of pipe pressure rating). All allowable leakage shall be the same as for pressure pipeline (see above).

Disinfection/Chlorination and Flushing

After successful completion of the hydrostatic test, the Contractor shall coordinate with the Agency to chlorinate all treated water main per AWWA C651 by completely filling the main and appurtenances with water having a 50-100 parts per million (ppm) available chlorine from calcium hypochlorite. The disinfection method shall be the continuous-feed method. The chlorinated water shall be retained in the main for at least 24 hours. At the end of the 24-hour period, the treated water in all portions of the main and appurtenances shall have a residual of not less than 25 parts per million (ppm). If the samples do not pass tests, iterate the disinfection process until a test passes.

Care shall be taken to prevent the strong chlorine solution from flowing back into the line supplying the water. A reduced pressure backflow preventer or an air gap must be used for this purpose.

After chlorination, the pipeline shall be flushed with treated water per AWWA C651. The water in the pipeline shall remain a minimum of 48 hours, after which the Agency shall collect bacteriological samples. These will be tested for coliform by an independent laboratory. The number and location of samples shall be determined by the Agency and shall be randomly chosen from fire hydrants and services. The improvements shall pass if all coliform tests show the most probable number (mpn) is less than 2.2. Failed tests will necessitate additional disinfection as above.

The Contractor shall make the necessary piping connections and furnish and install all necessary equipment required for the flushing operations. Velocities in the flushed pipe must be 2.5 feet per second or greater.

Pipe Diameter, In./Min. Flushing Flow, gpm							
6"/225	8"/400	12"/900	16"/1600	18"/2000	20"/2400	24"/3500	30"/5000

The minimum connection, backflow prevention device and outlet shall be as shown in the table below.

Pressure psi	Min. Connection, Backflow, and Outlet Dia., In.							
30	4	6	8	8	12	12	12	16
40	4	6	6	8	12	12	12	16
50	4	4	6	8	8	12	12	12
60	4	4	6	8	8	8	12	12
70	4	4	6	8	8	8	12	12
80	4	4	6	8	8	8	12	12
90	4	4	6	8	8	8	12	12
100	4	4	6	8	8	8	12	12

(Note: Pressure is measured at the point of connection of the inlet pipe to the source pipe.)

A reducing agent shall be applied to the water to completely neutralize the chlorine residual prior to discharge of the water. The Contractor shall provide for safe and legal disposal of water from such flushings. The Contractor shall remove all temporary flushing facilities. All costs for chlorination and flushing shall be paid by the Contractor, at no additional expense to the Agency

Continuity Testing

The Contractor shall test for the continuity of the locating wire at time of final walk-through. The Contractor shall provide all labor, equipment, and materials required for testing the continuity of the locating wire at each meter, valve, fire hydrant, blow off, and AVRV. Should continuity not be present and/or observed, the Contractor shall repair, replace, and retest as necessary, entirely at Contractor's expense.

Hydrants

The pumper outlet shall face the street or traffic lane unless specified otherwise. In the event that the hydrant must be disassembled to rotate the pumper outlet so that it faces the street, new gaskets shall be applied to the hydrant when it is reassembled. When installing the concrete thrust block at the shoe, ensure the dry barrel hydrant weep/drain hole remains clear to drain.

Services

Install services per the Standard Drawings unless otherwise specified.

Meters

The Agency will install meters. See Standard Drawings for meter laying lengths and meter box configurations.

Corrosion Monitoring

See Division 3, Section 7 - Corrosion Control.

[This page intentionally left blank.]

SECTION 2
CONCRETE WORK

General

In case of conflicts, these Standard Specifications shall govern over the Caltrans Standard Specifications, and the Caltrans Standard Specifications shall govern over those of the American Concrete Institute (ACI).

Hot weather is defined as any combination of high air temperature, low relative humidity and wind tending to impair the quality of fresh or hardened concrete or otherwise resulting in abnormal concrete properties. During hot weather, any or all the methods specified in ACI 305 shall be used to maintain the concrete temperature below the specified limits.

Materials

All concrete shall be designed for a 28-day compressive strength of at least 4,000 psi unless otherwise noted. The maximum slump shall be 4" per ASTM C143. Air entrainment shall be 6 percent per ASTM C138. The maximum water to cement ratio shall be 1:2 by weight. If concrete is to be placed by pumping, follow recommendations of ACI Committee 304.

All steel shall conform to Section 52 of the Caltrans Standard Specifications and these additional requirements. Bars for reinforcing shall be deformed, steel bars conforming to ASTM A615, Grade 40 minimum. Wire for tying reinforcement in place shall be 18 ga. or heavier, black annealed.

All formwork materials shall conform to requirements of Section 51 of the Caltrans Standard Specifications.

Forms for exposed concrete shall be APA-grade-stamped Class 1 plywood. Forms for foundation concrete shall be of any lumber of sufficient strength and rigidity to maintain specified tolerances. Forms shall be designed so that all exposed finish surfaces meet the appearance criteria of the project specifications.

Suppliers

Concrete suppliers shall be certified by the State of California Department of Transportation (Caltrans), and shall certify that all concrete furnished to the project conforms to these specifications and to the Caltrans Standard Specifications. In addition, the supplier shall furnish records of 7- and 28-day cure concrete cylinder tests for the proposed mix.

Related Materials

Moisture-Retaining Cover

Shall be one of the following, complying with ANSI/ASTM C171:

Waterproof paper

Polyethylene film

Polyethylene-Coated Burlap

Liquid Membrane-Forming Curing Compound

Liquid type membrane forming curing compound complying with ANSI/ASTM C 309, pigmented or colored at time of application, non-toxic to potable water, and with a water

retention of 0.035 pounds/square foot (0.17 kg/square meter) as determined per ASTM C-156 Standards.

Execution

The Agency shall be notified a minimum of 24 hours prior to concrete placement.

No more than one hour between loading concrete at the batch plant and placing the concrete is permissible.

The surface finish shall be as shown on the Plans, as approved by the Agency and conforms to Caltrans Standard Specifications. A one-inch chamfer shall be used on all vertical and horizontal finished edges unless otherwise shown, except slabs on grade which shall receive a 0.75-inch rounded corner on all horizontal corners.

Form Work

Forms shall be designed and constructed in accordance with the requirements of the ACI Standard Recommended Practice for Concrete Formwork, ACI-347 and Section 51 of the Caltrans Standard Specifications.

The forms shall be smooth, mortar-tight, true to the required lines and grades, and of sufficient strength to resist springing out of shape during placing. All dirt, chips, sawdust, and other foreign matter shall be completely removed before concrete is placed. Forms previously used shall be thoroughly cleaned of all dirt, mortar, and foreign matter before being reused. Before concrete is placed in forms, all inside surfaces of the forms shall be thoroughly coated with an approved form sealer. The form sealer shall leave no film on the surface of the forms that can be absorbed by the concrete and shall be compatible with concrete paint.

Reinforcing

Minimum Reinforcing Steel Cover

The minimum concrete coverage for steel reinforcement shall be as follows:

Concrete Exposure	Min. Reinforcing Steel Cover (inches)*
Cast against and exposed to soil	3
Exposed to weather or water	2
All other applications	1 ½

*In no case less than 1 ½ times the maximum aggregate size.

Supporting Devices

Steel reinforcement shall be accurately placed and shall be supported and secured against displacement by the use of adequate supporting and spacing devices, tie wires, etc., so that it will remain in its correct location in the finished work. No supporting devices shall be used that will impede the flow of concrete.

Installation of Reinforcing Bars

Reinforcing steel shall be cleaned, fabricated, placed, tied and supported in accordance with ACI-318.1/318.1R and the Concrete Reinforcing Steel Institute's Manual of Standard Practice. Reinforcing shall not be bent or straightened in any manner that will weaken the material. Unless Plans show otherwise, allow at least 40 bar diameters overlap on splices for deformed bars.

The clear spacing between parallel bars shall not be less than 1-1/2 times the normal diameter of the maximum size aggregate and at least 1-1/2 inches except at splices, which shall be wired together.

Construction Joints

Before placing new concrete on or against set concrete, thoroughly roughen existing concrete surfaces and remove laitance, foreign matter and loose particles by sand blasting or wire brushing to the satisfaction of the Agency.

Curing and Protection

Protect freshly placed concrete from premature drying and excessive cold or hot temperatures. Start initial curing as soon as free water has disappeared from concrete surface after placing and finishing.

Perform curing of concrete by moist curing, by moisture-retaining cover curing, by curing compound, and by combinations thereof.

All horizontal, screeded and floated surfaces exposed to drying winds and sunlight shall be sprayed with a curing compound at an application rate of 200sf per gallon.

Formed concrete surfaces shall be sprayed with a curing compound at an application rate of 200sf per gallon. This requirement will be waived if forms are left in place for at least 7 days.

Hot Weather Placing

Cool ingredients before mixing to maintain concrete temperature at time of placement below 90˚F. Mixing water may be chilled, or chopped ice may be used to control temperature provided water equivalent of ice is calculated into total amount of mixing water. Ice when introduced into the mixer shall be in such form that it will be completely melted and dispersed throughout the mix at the completion of the mixing time.

The temperature of concrete delivered at the time and location of placement shall not exceed 90˚F under any conditions. The temperature of concrete delivered at the time and location of placement, except for concrete deposited in wall or column forms, shall not exceed the following temperatures under the following ambient conditions:

Relative Humidity Less Than %	Ambient Temperature Greater than ˚F	Maximum Concrete Temperature ˚F
80	90	90
70	90	90
60	90	90
50	90	85
40	90	80
30	80	75
20	75	70

Preparation for Placing:

Forms and reinforcing steel shall be cooled by fog spraying evaporation or covering with water-soaked burlap immediately prior to placing concrete. Forms shall be free of standing water when concrete is placed.

Placement:

Concrete shall be placed in shallower layers than under normal conditions if necessary to assure coverage of the previous layer while it will respond readily to vibration.

Protection and Curing:

Fog spray shall be used after finishing and before the specified curing is commenced to avoid surface plastic-shrinkage cracking. Forms shall be kept covered and continuously moist. Once forms are loosened and during form removal concrete surfaces shall be protected from drying and shall be kept continuously wet by fog spraying or other approved means until the specified curing is commenced.

Cleanup and Protection

Protect all concrete work against injury and defacement during subsequent construction operations, until acceptance by the Agency.

All projecting fins, bolts, wire, nails, etc. not necessary for the work shall be removed or cut back one inch inside the finished surface and patched in an inconspicuous manner. Metal form ties extending from the face of permanently exposed concrete shall be cut off at least 1 inch deep in the concrete immediately after removal of the forms. Fill holes with a 1:3 cement and sand mortar of the same color as the adjoining concrete. Mix and place the mortar as dry as possible and finish flush with the adjacent surface.

If pre-cast snap-tie fillers are used, they shall be firmly epoxied and the final surface of plugs shall be smooth with the wall surface.

All defects in concrete work shall be corrected. Chip voids to a depth of at least 1 inch, with the edges perpendicular to the surface and parallel to form markings. Voids, surface irregularities, or honeycombing shall be filled by patching or rubbing as approved by the Agency and shall be done at the Contractor's expense. Concrete surfaces so repaired shall duplicate the appearance of the un-patched work.

Testing

Concrete Compression Strength Tests

Concrete materials and operations will be tested by the Agency and inspected as work progresses. One complete test shall consist of making three (3) test cylinders in accordance with ASTM C31, storing the cylinders for 24 hours at the pour site, delivering the cylinders to the testing laboratory, testing one cylinder at 7 days of cure, one cylinder at 28 days in accordance with ASTM C39, and the third cylinder at a date determined by the Agency if the 28-day strength is below the required concrete strength. Should tests show insufficient concrete strength, Contractor shall remove and dispose of all concrete from the same mix batch off-site at no cost to the Agency. Costs of concrete replacement, subsequent retesting or re-inspection and other appurtenant items directly related to this work shall be borne by the Contractor.

The Agency shall select the testing lab to be used. The Contractor shall give the selected lab sufficient notice of construction operations and schedule to allow the lab to schedule the required tests and inspection.

Concrete Slump Tests

Each concrete pour shall be tested for slump per ASTM C143 at the beginning of the pour, at the time the sample cylinders are filled, and whenever the consistency of the concrete appears to vary.

[This page intentionally left blank.]

SECTION 3
EARTHWORK

General

This work shall consist of performing all operations necessary to excavate earth and rock or other material, of whatever nature, including removing water, regardless of character and subsurface conditions necessary for the construction of the project facilities; placing backfill for all project facilities, including site grading, structures, transmission piping, electrical underground conduit, ditch and channel excavation, culverts, minor concrete structures, roadwork; removing and replacing unsuitable material; placing embankment material for all required project facilities; and other earthwork shown on the Plans and indicated in the Specifications including excavating and backfilling all structures, trenches and depressions resulting from the removal of obstructions, removing and replacing unsuitable material.

References

Comply with the following standards when making the following tests:

Tests	ASTM	California Test No.
Relative Compaction	D-1557-70	216 or 231
Sand Equivalent		217
Resistance (R-Value)		301
Sieve Analysis		302

Materials

Bedding, Haunching, and Initial Backfill

Unless otherwise specified, this material shall consist of well-graded clean sand or native material with 100 percent passing the No. 4 sieve, and less than 5 percent passing a #200 sieve. The material shall be free from vegetative matter and other deleterious substances. The backfill material shall be able to be compacted readily to form a firm and stable base. The material shall have a minimum Sand Equivalent (SE) of 30 (SE30). Any trench soil or moisture condition that prevents the bedding and haunching material from forming a firm and stable base requires the use of ¾-inch crushed rock for bedding and haunching and foundation as approved by the Agency. Proposed bedding, haunching, and initial backfill materials shall be submitted to the Agency with sieve analysis and SE test results.

Intermediate Backfill

Intermediate backfill can only be used with prior written approval from the Agency. The intermediate backfill material shall have a minimum SE of 30 with 100 percent passing a 1.5-inch sieve and well graded with less than 5 percent passing a #200 sieve. Any request to use intermediate backfill must be submitted with a sieve analyses and SE test results for review and approval.

Sand Slurry Backfill

Sand slurry backfill shall have the following mix (by percent volume): 23 percent sand, 73 percent water, and 4 percent entrapped air. Sand shall be as described for bedding, haunching, and backfilling, except that the SE shall be at least 95 (SE95). Sand Slurry

Backfill can only be used in a free-draining trench with prior written approval from the Agency.

Two-Sack Sand Cement Slurry Backfill

Low-strength concrete slurry backfill shall be a sand aggregate Portland Cement concrete of Type I or Type II Portland Cement per cubic yard of concrete sand and sufficient water added to provide a fluid, workable mix that will flow and can be pumped without separation of materials while being placed. Unless otherwise noted the maximum slump shall be 6 inches, maximum compressive strength 1000 psi and the minimum compressive strength 600 psi.

Four-Sack Sand Cement Slurry Backfill

4-sack concrete slurry shall consist of Type I or Type II Portland Cement added per cubic yard of concrete sand and sufficient water to provide a slump of not more than 4 inches. Unless otherwise noted, the maximum compressive strength shall be 1,800 psi and the minimum compressive strength shall be 1,400 psi.

Embankment Construction Material

Embankment shall be constructed of excavated or imported material that is free from organic matter, roots, debris, rocks larger than 3 inches in the greatest dimension, and shall not have more than 14 percent of the material larger than 1-1/2 inches, and shall have these properties:

Maximum Plasticity Index: 15

Maximum Percent Passing the No. 200 Sieve: 50

Maximum liquid limit: 50

Filter Fabric

Wherever filter fabric is specified, provide geotextile fabric meeting the minimum requirements shown in the following table:

Minimum Properties	Test Method	Values
Mechanical		
Unit Weight (oz/yd^2)	ASTM D-5199	12
Thickness (mils)	ASTM D-1777	110
Grab Tensile Strength (lbs)	ASTM D-4632	300
Grab Elongation (%)	ASTM D-4632	50
Puncture Strength (lbs)	ASTM D-4833	175
Burst Strength (psi)	ASTM D-3786	580
Hydraulic		
Permeability (cm/s)	ASTM D-4991	0.1
AOS (vs. Std. Sieve)	ASTM D-4751	100

Trench Plugs

Trench Plug (cutoff collar) shall be two-sack sand-cement slurry or material from excavation or imported material consisting of earth with particle sizes consisting of silts, clayey sands, or clays, and free from frozen material debris, vegetation, cinders, ashes and other organic materials. The nominal maximum particle size diameter for cutoff shall be 0.75 -inch and smaller, with 100 percent passing a 3/4-inch sieve, a minimum of 20 percent passing a #200 sieve, and a minimum plasticity index of 20, per ASTM D4318.

The Trench Plug shall be 4 feet long, shall key 18 inches into the trench walls and bottom, and shall extend 18 inches above the pipe crown. Trench Plugs shall be installed at crossings of streams, ditches, or canals or other sources of groundwater, or as requested by the Agency, and shall include drains.

Execution

Trench Excavation

Trench excavation shall include the removal of all materials or obstructions of any nature (except as otherwise specified), the installation and removal of all sheeting and bracing, and the control of water necessary to construct the work as shown. Unless otherwise indicated on the Drawings or permitted by the Agency, excavation shall be open cut. Trenching machines may be used except where their use will result in damage to existing facilities or where hand trenching is required to prevent damage to trees, tree roots, or other utilities.

All paving shall be saw cut or ground to a neat line. All loose, lifted, or cracked paving shall be removed to sound material and to a neat line as directed by the Agency.

Trench Width

Minimum trench width at the top of the pipe is detailed in the Standard Drawings. If for any reason, the trench is more than 8 inches greater than the minimum width, the Contractor shall provide, at his own expense, stronger pipe or corrected bedding conditions as approved by the Agency to meet the load requirements of the changed conditions at the Contractor's expense. Trenches shall meet OSHA requirements.

Foundation Bedding Treatment

Whenever the bottom of the trench cannot support a 300 lb/sf load, or in the opinion of the Agency, is otherwise unsuitable as a foundation for the pipe, the unsuitable material shall be removed to a depth such that when replaced with compacted ¾-inch crushed rock, it shall provide a stable and satisfactory foundation at the original trench grade as approved by the Agency.

Three-quarter-inch crushed rock shall be used only with approval of the Agency and the road controlling agency. Use of ¾-inch crushed rock must be reviewed for migration of fines. Filter fabric shall be provided around all ¾-inch crushed rock.

Whenever the trench bottom is in rocky material, the trench shall be over-excavated to 12 inches below the bottom of the bells, couplings, or joints of pipe and backfilled with bedding material.

Control of Water

Contractor shall control ground- and surface water to ensure the trench bottom has no standing water during backfill and compaction operations.

Trench Bedding, Haunching, and Backfill

Pipe shall be bedded and backfilled uniformly throughout its length. The specified bedding shall be compacted to a minimum 6-inch thickness below bells, couplings, and joints before placing the pipe. The bedding shall be compacted and leveled to give a uniform surface for laying the pipe.

Pipe shall not bear on bells, couplings, or joints. The trench shall be excavated at these locations as necessary. No permanent wedging and/or blocking of pipe shall be permitted. Care shall be taken not to compact the material beneath the bells, couplings, or joints until the pipe is in its final position.

Haunching shall be forced under the pipe and made firm and stable before any material is placed above the springline of the pipe. Backfill shall be compacted as specified with no damage to the pipe or appurtenances.

Intermediate backfill may be used with prior written approval of the Agency.

Slurry backfill may be used in place of bedding, haunching, and/or backfill as shown on the Plans or as approved by the Agency. Slurry backfills shall be delivered to the job site in a transit mix truck and deposited in the trench immediately after delivery. Slurry backfills can be covered with backfill as soon as surface water is absorbed and the slurry is firm and stable. Compaction of backfill or road section materials shall not begin until slurry backfills have set and provide a firm, stable base for the method of compaction used. Provisions shall be made by the Contractor to prevent the pipe from floating and to install a plastic bond breaker isolating the pipe from contact with the slurry.

Trench Compaction

The initial backfill shall be placed immediately after the pipe joints have been completed and inspected. The initial backfill shall be carefully placed without disturbing and/or damaging the pipe and/or joints, and shall be brought up evenly on both sides of the pipe. The initial backfill shall be manually compacted to a relative compaction of 90 percent using care to not damage the pipe or joints. "Manually compacted" does not exclude careful use of hand-controlled, power-operated equipment such as air tampers, vibrating tampers, or other hand controlled tools. Compaction by jetting will not be allowed unless approved in writing by the Agency.

At completion of compaction beneath the pipe haunches, backfill can continue in eight-inch maximum depth loose lifts compacted by means that provide specified compaction without damaging the pipe or joints.

The backfill material shall be moisture-conditioned to within 2 percent of optimum.

Lift thickness can be increased with prior written approval of the Agency and the road controlling agency.

The Agency and the road controlling agency shall determine the location and depth of all compaction tests. If a test fails, the area 15 feet on either side of the test shall be re-worked and re-tested to the satisfaction of the Agency and/or road-controling agency until passing tests are achieved. An additional test will be performed 50 feet on either side of the initial failing test. The entire area between adjacent failing tests shall be re-worked and re-tested until passing tests are achieved.

Embankment Construction

Placement and compaction of embankment material shall be in conformance with Caltrans Standard Specifications Sections 19-6.01 and 19-6.02. The material shall be moisture conditioned to within 2 percent of optimum.

SECTION 4
CLEARING, GRUBBING, AND STRIPPING

General

This section describes the work included in clearing, grubbing, stripping, and otherwise preparing the project site for construction operations.

Clearing

Remove and dispose of shrubs, brush, limbs, and other vegetative growth. Remove all evidence of their presence from the surface, including sticks and branches greater than 2 inches in diameter or thickness. Remove and dispose of trash piles, rubbish, and fencing. Protect trees, shrubs, vegetative growth, and fencing not designated for removal.

Grubbing

Remove and dispose of wood or root matter below the ground surface remaining after clearing, including stumps, trunks, roots, or root systems greater than 2 inches in diameter or thickness, to a depth of 12 inches.

Stripping

Remove and dispose of all organic sod, topsoil, ash, grass and grass roots, and other structurally unsound material remaining after clearing and grubbing from the areas designated to be stripped.

Trees and Shrubbery

It is possible that existing trees, shrubbery, and other vegetative material are not be shown on the Plans. Inspect the site to determine the nature, location, size, and extent of vegetative material to be removed or preserved, as specified herein. Preserve trees that are specifically designated for preservation on the Plans, conducting only hand tool work within their driplines.

Preservation of Trees, Shrubs and other Plant Material

The following areas shall be fenced with four-foot-tall, brightly colored synthetic mesh fencing.

Wetland preservation easements within 50 feet of proposed construction activities

All trees to remain within 50 feet of the construction area as follows:

Outside the dripline of trees 6 inches diameter at breast height (dbh)

Outside the dripline of trees 10 inches dbh aggregate for multiple-trunk trees

Around any special protection areas defined in project environmental review documents

As the Agency directs

A 1' x 2' sign shall be attached to fencing stating, "This tree to be saved," or "Protection area – keep out."

No development or on-site storage of equipment or materials will be permitted until the temporary fencing measures above are implemented.

All fencing shall be maintained throughout the construction project.

Execution

Clearing and Grubbing Limits

All excavation areas associated with new pipelines, structures, slabs, and special areas shown on Plans shall be cleared and grubbed.

Disposal of Clearing and Grubbing Debris

Do not burn combustible materials. Remove all cleared and grubbed material from the work site and dispose of in accordance with all local laws, codes, and ordinances.

Areas to be Stripped

All excavation areas associated with new pipelines, structures, slabs, and special areas shown on Plans shall be stripped.

Disposal of Strippings

Remove all stripped material and legally dispose offsite.

SECTION 5
PAINTING AND COATING

General

This section includes materials and application of painting and coating systems for submerged metal, exposed metal, buried metal, and metal in contact with concrete.

Submittals

Submit manufacturer's data sheets detailing coating and surface preparation work including the following:

Coating manufacturer's technical data on product and recommended use. Include the brand name and series number of all coatings to be used.

Coating manufacturer's surface preparation criteria, including recommended surface profile range after abrasive blasting.

Coating manufacturer's application instructions, equipment recommendation, temperature and humidity limitations, pot life and induction requirements, drying and curing times, and recoat cycle times. Recoat times and final cure shall be listed at 35° F., 45° F., 55° F., 65° F. and 75° F. substrate temperatures. Provide manufacturer's maximum and minimum material and substrate temperatures for proper application.

Contractor's written program for over spray prevention.

Coating manufacturer's Material Safety Data Sheets (MSDS) for all Product to be used on the project, including solvents, additives, cleaners and thinners.

Abrasive supplier's certification that the abrasive blast material to be provided complies with the State of California Environmental Protection Agency, Air Resources Board (CARB) and local Air Quality Management District (AQMD) requirements for dry outdoor blasting as project requires.

Abrasive blast cleaning and application equipment list and complete procedures for its use.

Contractor's safety program to be employed on this project complying with the current requirements of Cal/OSHA, OSHA and these Standards.

Qualifications

The coating applicator shall hold a valid State of California Contractor's Class C-33 Painting and Decorating Contractors license for performing abrasive blast cleaning and coating work. The Contractor's coating applicator shall have a minimum of five (5) years practical experience and successful history in the application of similar products on like projects. The Contractor shall substantiate this requirement by furnishing and receiving Agency approval of a written list of references that includes a list of projects with verifiable coating inspection reports prior to beginning work.

The Contractor's coating applicator shall:

Provide a supervisor at the work site during cleaning and coating operations.

Provide skilled personnel qualified to perform the required work in a manner comparable with the best standards of practice and safety.

Maintain continuity of personnel and coordinate transfer of personnel with the Agency.

Materials

General

All materials of a specified system including primer, touch-up, intermediate, and finish coats shall be provided by the same manufacturer. Thinners, cleaners and other additives shall be as recommended in writing by the coating manufacturer for the specified system. Materials handling and application shall conform at a minimum with manufacturers' requirements.

Coating materials including additives to be used in interior potable water contact surfaces must appear in the current ANSI/NSF Standard 61 "Listing of Certified Drinking Water System Components- Health Effects", as published by NSF International (NSF). They shall conform to regulations and applicable requirements of local, State and federal air quality and health regulatory agencies.

All coatings used on this project shall be asbestos free, lead free, cadmium free, and chromate free.

Coating products shall conform to local AQMD rules and regulations.

Painting and Coating Systems

Deliver paints to the jobsite in the original, unopened containers.

The following index lists the various painting and coating systems by service and generic type:

PAINT COATING SYSTEM INDEX		
System No.	**Title**	**Generic Coating**
Submerged Metal Coating Systems		
1	Submerged Metal, Non-Potable, Normal Service	Coal Tar
		Coal Tar Epoxy
2	Submerged Metal, Non-Potable, Severe Service	Polyamidoamine Epoxy
		Polyamine Epoxy
6	Submerged Metal, Potable, Normal Service	Urethane or Epoxy
Exposed Metal Coating Systems		
12	Exposed metal, Atmospheric Weather, Corrosive Environment	Polyamidoamine Epoxy
13	Steel Storage Tank, Interior Potable Water	High-Solids Epoxy
14	Steel Storage Tank, Exterior	Polyurethane
18	Exposed Metal, Galvanized	Synthetic Resin Primer
Buried Metal Coating Systems		
21	Buried Metal	Coal Tar
		Coal Tar Epoxy
Systems for Metal in Contact with Concrete		
22	Aluminum in Contact with Concrete	Bituminous Paint

System No.1 - Submerged Metal Coating Systems – Non-Potable Water – Normal Service

Coal Tar

Service Conditions:

For use with metal structures that cannot be dried properly. Material is soft, single component and approved for use with potable water.

Surface Preparation:

SSPC SP-3

Prime Coat:

8 dry mils

Coal Tar Epoxy

Service Conditions:

For use on metal structures or pipes where adequate drying time is available or for application at temperatures above 90 degrees Fahrenheit with reduced drying time. Material has superior abrasion resistance, longer drying time.

Surface Preparation:

SSPC SP-10

Prime Coat:

8 mils

Finish Coat:

8 mils

System No. 2 - Metal submerged in Non-Potable Water - Severe Service

Polyamidoamine (high solids) epoxy

Service Conditions:

For use on metal submerged in non-potable water exposed to abrasion or chemical attack

Surface preparation:

SSPC SP10 (anchor pattern of 1.5-2.0 mils)

Prime Coat:

Shop-or Field-applied, two-component polyamidoamine epoxy applied at 4.0 to 6.0 dry mils.

Intermediate Coat (as necessary):

Field-applied two-component polyamidoamine epoxy applied at 4.0 to 6.0 dry mils.

Stripe Coat (as necessary):

Field-applied, two-component polyamidoamine epoxy applied at 1.0 to 2.0 dry mils to all welds and sharp edges per SSPC-PA1, 6.6 Striping, 7.4.6 Application Method (Brush).

Finish Coat:

Field-applied, two-component polyamidoamine epoxy applied at 4.0 to 6.0 dry mils.

Polyamine (100 percent solids) epoxy

Service Conditions:

For use on metal submerged in non-potable water exposed to abrasion or chemical attack

Surface preparation:

SSPC SP10 (anchor pattern of 3.0-4.0 mils)

Stripe Coat:

Field-applied, two-component polyamidoamine epoxy applied at 8.0 to 12.0 dry mils to all welds and sharp edges per SSPC-PA1, 6.6 Striping, 7.4.6 Application Method (Brush), followed immediately by finish coat "wet on wet."

Finish Coat:

Field-applied, two-component polyamine epoxy applied pinhole-free at 30.0 to 40.0 dry mils in one or two coats.

System No. 6 -- Submerged Metal - Potable Water - Normal Service.

Urethane or Epoxy

Service Conditions:

For use on structures, piping, or equipment immersed in potable water.

Surface Preparation:

SSPC-SP10

Prime Coat:

Shop or field-applied urethane applied at 2.5 to 3.5 dry mils.

Intermediate Coat:

Field-applied, two-component epoxy applied at 4.0 to 6.0 dry mils.

Stripe Coat:

Field-applied, two-component epoxy applied at 1.0 to 2.0 dry mils to all welds and sharp edges per SSPC-PA 1, 6.6 Striping, 7.4.6 Application Method (Brush).

Finish:

Field-applied, two-component epoxy applied at 4.0 to 6.0 dry mils.

System No. 12 - Exposed Metal - Atmospheric Weathering - Corrosive Environment

Semi-Gloss polyamidoamine epoxy (min. 43% solids)

Service Conditions:

For use with metal structures or pipes subjected to water condensation and chemical fumes, such as hydrogen sulfide, or atmospheric weathering.

Surface Preparation:

Previously painted Steel; SSPC SP-12 (scarify any remaining coating with 80-100 grit sandpaper.)

Galvanized components: SSPC SP-7

Bare Steel: SSPC SP-3

Spot Prime:

Field-apply, two-component epoxy at 4.0 to 6.0 dry mils to all bare steel, overlapping adjacent coating by 2 to 4 inches.

Prime Coat:

Field-applied, two-component epoxy applied at 4.0 to 6.0 dry mils.

Finish Coat:

Field-applied, semi-gloss polyurethane applied at 2.0 to 3.0 dry mils.

System No. 13 - Steel Storage Tank - Interior Potable Water

High-solids epoxy

Service Conditions:

For use on interior of steel storage tanks for potable water use.

Surface Preparation:

SSPC-SP-10

Shop or Field Prime Coat:

4.0 dry mils.

Finish Coat:

Field-apply each coat to a minimum of 6.0 dry mils. Total coat shall be at least 10.0 dry mils.

System No. 14 - Steel Storage Tank - Exterior

Polyurethane

Service Conditions:

For use on exterior surfaces of steel storage tanks. Material weathers well and resists graffiti.

Surface preparation:

SSPC SP-6.

Shop or Field Prime Coat:

2.5-3.5 dry mils

Finish Coat:

Apply each coat of acrylic alphatic polyurethane to 3.0-5.0 dry mils. Total coat shall be 5.5-8.5 dry mils.

System No. 18 - Exposed Metal - Galvanized

Synthetic resin primer (phosphoric acid or vinyl butyral acid).

Service Conditions:

Surfaces shall be galvanized surfaces before applying topcoat.

Surface Preparation:

SSPC SP-1 followed by SSPC SP-7 (surface profile of 1.5 - 2.0 mils for interior surfaces, 1.0 - 1.5 mils for exterior surfaces)

Prime Coat:

4.0-6.0 dry mils.

System No. 21 -- Buried Metal

Coal tar or coal-tar epoxy (68 percent solids min.)

Service Conditions:

Buried metal, including valves, flanges, bolts, nuts, structural steel, fittings and metal piping in vaults.

Surface Preparation:

SSPC SP-6.

Prime Coat:

15 mils.

Topcoat:

15 mils.

System No. 22 – Aluminum in Contact with Concrete

Bituminous paint (68 percent solids min., coal tar pitch-based)

Service Conditions:

Aluminum grating, stairs, or structural members in contact with concrete.

Surface Preparation:

SSPC SP-1.

Prime Coat:

Synthetic resin wash primer (phosphoric acid or vinyl butyral acid)

Finish Coats:

Two coats of 12 dry mils.

Execution

Surface Preparation

Do not blast or prepare more surface area than can be coated in 1 day. Remove all sharp edges, burns, and weld spatter. Do not blast PVC, CPVC, or FRP piping or equipment. Do not blast epoxy-or enamel-coated pipe that has already been factory-coated.

Surface preparation shall conform to these SSPC (Steel Structure Painting Council, Surface Preparation Specifications, ANSI A159.1) specifications:

Description	SSPC Specification
Solvent Cleaning	SP1
Hand Tool Cleaning	SP2
Power Tool Cleaning	SP3
White Metal Blast Cleaning	SP5
Commercial Blast Cleaning	SP6
Brush-Off Blast Cleaning	SP7
Pickling	SP8
Near-White Blast Cleaning	SP10
Power Tool Cleaning to Bare Metal	SP11
Shop, Field, and Maintenance Painting	PA1

Wherever the words "solvent cleaning," "hand tool cleaning," "wire brushing," or "blast cleaning" or similar words are used in these Specifications or in paint manufacturer's specifications, they shall be understood to refer to the applicable SSPC specifications listed above.

Paint Mixing

Prepare multiple-component coatings using all of the contents of the container for each component as packaged by the paint manufacturer. Do not use partial batches. Do not use multiple-component coatings that have been mixed beyond their pot life. Provide small quantity kits for touchup painting and for painting other small areas. Mix only the components specified and furnished by the paint manufacturer. Do not intermix additional components for reasons of color or otherwise, even within the same generic type of coating.

Surfaces Not to Be Coated

Do not paint these surfaces unless otherwise noted and protect during the painting of adjacent areas:

Concrete

Mortar-coated pipe and fittings

Stainless steel

Metal letters

Copper tubing

Red brass piping

PVC piping except where such piping occurs in rooms where the walls are painted or required for color coding

Electrical fixtures except for factory coatings

Nameplates

Grease fittings

Submerged brass and copper

Buried pipe

Aluminum handrails and grating.

Protection of surfaces not to be painted

Remove, mask, or otherwise protect hardware, lighting fixtures, switchplates, aluminum surfaces, machined surfaces, couplings, shafts, bearings, nameplates on machinery, arid other surfaces not intended to be painted. Provide drop cloths to prevent paint materials from falling on or marring adjacent surfaces. Protect working parts of mechanical and electrical equipment from damage during surface preparation and painting process. Mask openings in motors to prevent paint and other materials from entering the motors.

Field Touch-Up of Shop-Applied Prime Coats

Surfaces that are shop-primed shall receive a field touchup of the same primer used in the original prime coat.

Field Touch-Up of Galvanized Coatings

Surfaces that are shop-primed with inorganic zinc primers shall receive a field touchup of organic zinc primer to cover all scratches or abraded areas. Organic zinc coating system shall have a minimum volume solids content of 32 percent and a minimum zinc content of 15 pounds per gallon. Coating shall be of the converted epoxy or epoxy phenolic type. Organic zinc primer shall be manufactured by the prime coat and finish coat manufacturer.

Damaged areas of coating with a surface area not exceeding one square foot each shall be repaired in accordance with ASTM A780. The cold-applied zinc dust coating shall be applied in accordance with the manufacturer's printed instructions. Two coats shall be applied, to produce a total dry film thickness of 4 to 6 mils. Surface preparation shall consist of power tool cleaning to remove all corrosion, foreign materials, and defective zinc coating, and to expose bare substrate.

If items are damaged with total surface areas that exceed one square foot or 10 percent of the surface area of the item, whichever area is less, the damaged areas shall be re-galvanized with the hot-dip process.

Dry Film Thickness Testing

Measure coating thickness specified for ferrous surfaces with a magnetic-type dry-film thickness gauge. Test the finish coat (except zinc primer and galvanizing) for holidays and discontinuities with an electrical holiday detector, low-voltage, wet-sponge type. Check each coat for the correct dry-film thickness. Do not measure within eight hours after application of the coating.

If the item has an improper finish color or insufficient film thickness, clean and topcoat the surface with the specified paint material to obtain the specified color and coverage. Hand- or power-sand visible areas of chipped, peeled, or abraded paint, feathering the edges, then prime and finish coat. Work shall be free of runs, bridges, shiners, laps, or other imperfections.

SECTION 6
BORING, JACKING, AND TUNNELING

General

Minimum casing inside diameter (I.D.) is 24 inches. Casings must be designed by a professional engineer registered in California.

Bores and tunnels made beneath roadways or railroads are not only subject to these Standards, but also the standards and approval of the road authority or the owner of the road or railroad.

Materials

Casings

Allowable casings shall be steel or high-density polyethylene (HDPE). Alternate casings may be permitted by the Agency if they meet or exceed steel pipe strength specifications and pose no health or safety hazards. Lap-weld steel pipe shall not be used for boring. Size casings to permit installation and removal of the carrier pipe. Parallel casing installations shall have a minimum of 1-1/2 diameters clearance between casing walls. The clearance between casings, when crossing freeways, shall be 2 diameters minimum.

When practical, install casing in bore before open-cut installation of carrier pipe. If it is not possible to install bores at the start of construction, leave 100 feet of carrier pipe at the bore pit side, and 300 feet at the receiving pit side for construction after completion of the bore.

Casing(s) placed within conventional highway rights-of-way shall extend 5 feet from the back of the curb on one side to 5 feet in the back of the curb on the opposite side, or to the right-of-way if the road line is less than 5 feet. Where Portland cement concrete (PCC) gutter exists, the casing shall extend at least 5 feet beyond the back of the gutter. In rural areas, the distance from the edge of the pavement to each end of the bore shall be 10 feet or 5 feet beyond the outside toe of the slope.

In any one bore, maximum variation between maximum and minimum outside diameter shall not exceed 1/4 inch for casings 24 to 48 inches O.D., and 0.50 inches for larger casings.

Steel Pipe

Use straight-seam or spiral weld steel casing with a minimum yield strength of 35,000 psi before cold forming. Casing shall have no coating or wrapping. Machine-clean pre-wrapped casing before delivery. Maximum weld height over plate thickness shall be 3/16 inch (0.185 inch).

The Contractor is responsible for using a casing of sufficient strength to install it without damage or failure. Casing buckled by jacking force shall be removed and replaced at no cost to the Agency.

Lengths of casing pipe, as long as practical, shall be used except as restricted otherwise. Joints between casing pipe sections shall be butt joints with complete joint penetration, single groove welds, for the entire joint circumference. Prior to welding the joints, the Contractor shall ensure that both ends of the casing sections being welded are square.

Outside Diameter (O.D.) Tolerances

The O.D. shall not vary by more than one percent.

Wall Thickness Tolerances

The wall thickness in any location on the casing shall not vary from the required thickness by more than +17.5 to -10 percent of wall thickness.

Wall Thickness Minimums

Minimum wall thickness for steel pipe casing shall be as shown on Standard Drawing S404

Lead Joints

A heavy-wall lead joint may be required for adverse ground conditions. If a heavy-wall lead joint is required, it should be 10 feet long but must be at least 1 diameter long, and shall have a minimum wall thickness of 1.5 times the wall thickness of the casing being used.

Lengths and Ends

Unless otherwise approved by the Agency, the casing shall be square cut by mechanical methods. Torches held by machinery shall be considered to meet this requirement. This does not apply to field cutting. Casing lengths shall be at least as long as the auger length.

Straightness

Casing shall be measured by the cord method with either string or wire stretched taut to take out all visible sag. Maximum cord measured along the casing shall be equal to true length times 0.02 percent. This is to be measured on actual lengths before loading for delivery to the job site.

Steel Casings, Insulators

Lined steel casing insulators with plastic runners or skids shall be used to support and insulate the carrier pipe within the casing while preventing carrier pipe flotation. The size, type, spacing, installation, and manufacturer of these insulators shall be per the manufacturer's recommendations and these Specifications. If a discrepancy exists between the two, these Specifications shall override.

Band/Shell

The band, shell, or body of the insulator shall be constructed of 14 gauge T-304 stainless steel, or shall be hot-rolled, pickled, minimum 14-gauge steel with a coating of rust-inhibiting enamel or hot-fused PVC.

Connecting Flanges

The connecting flanges shall be of the same material as the shell and shall be ribbed or gusseted for rigidity.

Bolts/Studs

All bolts, studs and nuts shall be 5/16 inch diameter minimum and shall be stainless steel only.

Insulating Liner

The insulator shall have a PVC insulating liner with a minimum thickness of 0.090 inch and with 85 to 90 durometer.

Skids/Runners

The insulator shall have high-density plastic skids. The skids shall have a high resistance to abrasion and a low coefficient of friction. The skids may be supported by a riser welded to the shell. The skids shall be either bolted or have a stud-welded connection to the shell or riser. Glued connections are not acceptable.

Wing Cutters/Bands/Flairs

Wing cutters, if used, shall cut a maximum of 1 inch larger than the casing measured on the outside diameter. Any voids occurring from the use of wing cutters shall be grouted.

HDPE Pipe

Install HDPE casing where requested by the Agency and where the carrier pipe is also HDPE.

Center Spacers

Do not use center spacers for HDPE pipe installed in HDPE casing.

Diameter of Hole

Bored installations shall have a bored hole diameter essentially the same as the outside diameter of the casing pipe to be installed.

HDPE Casing Pipe Length

Lengths of casing pipe shall be as long as practical for site conditions. Joints between sections shall be completely fused in accordance with the manufacturer's recommendations.

Carrier Pipe

HDPE, DIP, and PVC pipe may be used for carrier pipe. All carrier pipe joints shall be restrained using a method approved by the Agency. HDPE Carrier Pipe may only be used with HDPE Casing Pipe.

Execution

Jacking and Receiving Pits

All boring, jacking, and receiving pits shall be:

Located at least 10 feet from edge of pavement on conventional highways in rural areas

Located 5 feet behind concrete curb or asphalt concrete (AC) dike on conventional highways in urban areas;

Located 5 feet outside toe of slope in embankment areas;

Located at least 20 feet from center line of main line Railroad;

Adequately fenced or barricaded behind type "K" barrier

Adequately shored in accordance with CalOSHA or OSHA requirements

All pits left overnight shall be protected with a 6-foot-high fence in panel sections securely fastened together with reflectors secured to the side of the fence that faces the traffic. Partially buried posts with fencing attached to form a continuous fence, with reflectors secured to the side of the fence that faces the traffic may also be used. This fencing is not intended to be vehicle-proof.

Casing construction shall not to interfere with, interrupt or endanger surface and activity above, and shall minimize subsidence of the surface, structures, and utilities above and

in the vicinity of the casing. Support the ground continuously in a manner that will prevent loss of ground and keep the perimeters and face of the casing, passages and shafts stable. The Contractor shall be responsible for all settlement resulting from casing operations and shall repair and restore damaged property to its original or better condition at no cost to the Agency.

Grouting

Grouting shall be necessary only if there is reason to believe that voids exceeding 1 inch over the outside diameter of casing or liner plate are present.

From Inside Casing

For safety reasons, inside grouting can be used on casings 30 inches or larger.

Place fittings to fill expected cavities. When grouting, monitor the road or railroad surface over the casing and the casing being installed so that the road, railroad surface, casing or other structures nearby are not altered or damaged. Grouting pressure shall be the minimum pressure to feed the grout, but in no case shall it be more than 4 psi measured at the grouting fitting.

Alignment Tolerances

The centerline of the casing shall not vary in line or grade from the desired alignment by more than one percent or 1 foot per 100 feet of casing.

Rotary Drilling

The face must be mechanically cut (not cut with fluid pressure). If ground conditions warrant, a bentonite mix may be used to lubricate the cutter. The mix must be supplied to the face from a controlled tank. (Under no circumstances shall the fluid line be hooked directly to the water system or the water truck while drilling). Provide a controlled tank capable of mixing and agitating the fluid and regulating volume and pressure. Use the fluid mix only for lubrication and to bring back cuttings, not to cut the face.

Casing Installation

Conduct boring and jacking operations from a shaft excavated at one end of the section to be bored. Where conditions and accessibility are suitable, place the shaft on the downstream end of the bore.

Boring and jacking of casing pipes shall be accomplished by the dry auger boring method without jetting, sluicing or wet boring.

Auger the hole and jack the casing through the soil simultaneously.

Bored installations shall have a bored-hole diameter essentially the same as the outside diameter of the casing pipe to be installed.

Execute boring ahead of the casing pipe with extreme care, commensurate with the rate of casing pipe penetration. Boring may proceed slightly in advance of the penetrating pipe and shall be made in such a manner to prevent any voids in the earth around the outside perimeter of the pipe. Make all investigations and determine if the soil conditions are such as to require the use of a shield.

As the casing is installed, check the horizontal and vertical alignment frequently. Make corrections prior to continuing operation. For casing pipe installations over 100 feet in length, the auger shall be removed and the alignment and grade checked at minimum intervals of 60 feet.

Any casing pipe damaged in jacking operations shall be repaired, if approved by the Agency, or removed and replaced at Contractor's expense.

The Contractor shall prepare a contingency plan which will allow the use of a casing lubricant, such as bentonite, in the event excessive frictional forces jeopardize the successful completion of the casing installation.

The Contractor shall maintain and operate pumps and other necessary drainage system equipment to keep work dewatered at all times.

Adequate sheeting, shoring and bracing for embankments, operating pits and other appurtenances shall be placed and maintained to ensure that work proceeds safely and expeditiously. Upon completion of the required work, the sheeting, shoring and bracing shall be left in place, cut off or removed, as designated by the Agency.

Casing Fill

The annular space between the carrier and casing pipes is not to be filled.

End Caps

Seal the ends of the casing with sandbags and at least 12 inches of low-strength concrete per Standard Drawing S404.

[This page intentionally left blank.]

SECTION 7
CORROSION CONTROL

General

Corrosion control systems shall be designed by a registered corrosion engineer or a National Association of Corrosion Agencies (NACE)-certified Cathodic Protection Specialist or Senior Corrosion Technologist.

The minimum design life of the cathodic protection system will be 30 years. The cathodic protection system will require an annual survey and adjustment to ensure the long-term satisfactory operating performance of the system.

Provide a corrosion analysis for all transmission pipelines.

Materials

Magnesium Anodes for Buried Metallic Valves

Magnesium anodes shall be of high potential alloy with composition as indicated below. Each anode shall be cast with a steel core protruding from one end. The core shall be of sufficient length to permit attachment of a lead wire, the attachment procedure shall be approved by the Inspector.

Element	Chemical Composition by Weight
Aluminum	5.0 – 7.0% max
Manganese	0.15% min
Zinc	2.0 – 4.0% max
Silicon	0.30% max
Copper	0.1% max
Nickel	0.003% max
Iron	0.003% max
Other	0.30% max
Magnesium	Balance

Magnesium anodes for valves shall have a net weight of 17 pounds. Two 9-pound anodes may be substituted for one 17-pound anode.

The anode core strap shall be galvanized steel, with one end recessed to provide access to the rod for connection of the lead wire.

Each anode lead wire shall be 10 feet long, consisting of black No. 12 AWG, Type TW or HMWPE insulation. Connect the lead wire to the core with silver brazing to the rod for a mechanically secure connection

The soldered connection and core shall be sealed entirely with electrical potting compound.

Test Stations

Space test stations in intervals 800 to 1,000 feet along the pipeline to provide adequate test points for checking the performance of the system and to allow for future system adjustment. Additional test stations may be required at the starting point and the ending point for each new pipeline.

Ground level test stations shall include a cast-iron lid unless otherwise shown on the Plans. The cover shall be manufactured with "CP-TEST" markings for easy identification. Terminal boxes shall be locking type, constructed of high-impact, molded Lexan plastic. The test box shall be provided with sufficient hardware and terminals for each cable as shown on the drawings. All test station hardware, including nuts, bolts and shorting straps shall be nickel-plated brass. Terminal Boxes for the anode test stations shall be supplied with 6 amp, 0.01 ohm shunts.

Post mounted test stations shall be weather tight with cast aluminum body. The size and number of terminals will vary according to the number of cables. Use appropriately sized terminal boxes at each location. All test station hardware, including nuts, bolts and shorting straps shall be nickel-plated brass. Mount test stations on 4-inch diameter rigid galvanized schedule 40 steel posts.

Impressed Current System for Tanks

Rectifier

The rectifier unit shall include:

Transformer

Selenium or silicon rectifying elements

Circuit breaker(s)

Lighting, surge, and overload protection

Provision for air-cooling operation

Voltmeter(s) and ammeter(s)

Weatherproof cabinet in accordance with NEMA 3R requirements

Provision to vary current output form 0% to 100% of rated capacity.

Provision for mounting, grounding, and locking

Provisions for 110-120 volt, 60 HZ, single phase A.C. power

D.C. output capacity in volts and amperes in accordance with Design (Section B)

Number of circuits or separate rectifiers in accordance with design (Section B)

Automatic Controller

Automatic controller shall adjust current output to compensate for changes in water level, temperature of water, water chemistry, and cathodic polarization, and shall include the following provisions:

Utilize long-life reference electrode(s) mounted in tank

Monitor the tank-to-water potential, free of IR drop

Automatically adjust the tank-to-water potential, free of IR drop, to a preset value

Operate within 25 mV of preset value

Automatically limit current to preset value

Utilize potential meters to display tank-to water potential, free of IR drop

Long Life Reference Electrodes

Reference electrode shall consist of a copper-copper sulfate electrode manufactured to remain stable (±25 mV) for a minimum of 10 years. The reference electrode-to-lead wire connection shall be encapsulated to prevent water migration.

Anode Suspension System

Hand hole assemblies used for the installation of vertical anode suspension systems from the roof of the tank shall consist of a 6-inch-diameter steel cover, rubber gasket, and a steel bar and bolt assembly.

Icing Tanks

The anode suspension system for icing tanks shall consist of a minimum 5/16-inch polyester cord secured to steel anchors welded to the side wall of the tank bowl or to the exterior of the dry access column of spheroidal type tanks and the side wall of wet risers 30 inches in diameter or larger. All cord-to-cord connections shall be tied and taped.

Non-Icing Tanks

The anode suspension system for non-icing tanks shall be either the same system as above, or a system allowing for vertical suspension from the roof of the tank. The anode lead wire shall be a minimum No. 10 HMWPE or USE-2 (EPR-HYP) and will be used to secure to the lead wire to a porcelain insulator bracket bolted or welded to the interior of the tank roof.

Anode Materials

The anode materials shall consist of one of the following:

Minimum 0.06-inch diameter platinized niobium with 25 micro inches of platinum.

Minimum 0.062-inch diameter titanium with a precious metal oxide coating.

One-inch diameter x 9-inch high silicon cast iron.

All anode-to-header cable connections shall be sealed to prevent water migration.

Pressure Entrance Fitting

For icing tanks, the pressure entrance fitting shall accommodate anode and reference electrode lead wires through the side wall of the bowl or riser of the tank.

The pressure entrance fitting shall consist of a maximum 1.5-inch coupling rated at 3000 psi. The fitting shall be manufactured to prevent leakage or water migration through the insulated lead wires.

Wiring

All wiring within the tank shall be insulated to prevent copper conductor-to-water contact.

All wiring on the exterior of the tank shall be insulated and run in rigid conduit.

Hardware

All hardware used in conjunction with the system shall be protected against corrosion.

A.C. Power

A.C. power to the rectifier shall be furnished and installed according to the Plans and specifications.

Execution

Cathodic Protection for Valves

All buried valves shall be installed with magnesium anodes as described in these Standards.

Thermite Welds

Remove any existing coating on the valve by making a 3 inch square window in the coating. File or wire brush the exposed metal surface to produce a bright metal finish, equivalent to SSPC SP-10.

Cartridges and sleeves for welding the anode lead wires to the valve shall have a minimum weight of 15 grams. Weld metal shall be as recommended by the manufacturer for the type of pipe to which the wire is to be welded.

Thermite weld caps shall be high density polyethylene plastic, 20 mils (minimum) thick. Design shall incorporate a mastic-filled dome and a tunnel portion to contain the lead wire from the thermite weld connection.

Silver brazing alloy shall have a minimum silver content of 15 percent as per ASTM E 56. Melting range shall be 1,185°F to 1,300°F.

Installation of Magnesium Anodes on Valves

Install the magnesium anodes as shown on the Plans or as shown in Standard Drawing S112. Anodes shall be installed in the trench horizontally or vertically in native soil, after excavation to proper depth, as shown. Spacing between anodes shall be five feet (minimum) if multiple anodes are installed at a single location. Prior to placing anodes in the trench or hole, paper or plastic bags shall be removed, but the cloth bag shall remain around the anode. Care shall be exercised during installation to prevent damage to the cloth bag and loss of backfill material. After placing anodes in the trench, native soil, free of rocks and other foreign objects shall be placed around the anode to a minimum cover of one foot above the anode. Remainder of the trench shall then be backfilled with native soil. During installation, anodes shall not be supported or handled by use of attached wires.

Backfill around each anode and compact to the relative compaction specified to one foot above the anode.

Bury anode lead wires a minimum of 24 inches below finished grade. Coil wires in slack loops to compensate for settlement near the anode and near the lead-wire connection to the pipe. Any damage to the insulation on the anode lead wire shall be wrapped with 2 layers of Scotch No. 23 high-voltage tape and 2 layers of Scotch No. 88 vinyl-electrical tape, or equal.

After backfill is level with the top of the anode, pour 15 gallons of water into the anode to completely saturate the backfill.

Cathodic Protection of Pipelines

Ductile Iron Pipelines

Comply with the recommended practice of NACE RP 0169, Control of Corrosion on Underground or Submerged Metallic Piping Systems.

Polyethylene Encasement For Ductile Iron Pipe

When required by the Agency or where soil conditions necessitate, all buried ductile iron pipe shall be coated in 16 to 30 mils of coal tar mastic and wrapped in polyethylene in accordance with AWWA C105/A21.5, Polyethylene Encasement of Ductile Iron Piping for Water and Other Liquids. The polyethylene sheets used for encasement of the ductile iron pipe and fittings shall be minimum 8 mils thick.

Bonding of Ductile Iron Pipe Joints

All buried, non-insulating joints of ductile iron pipelines shall be bonded with HMWPE-insulated, stranded, copper cables, for electrical continuity. The joint bond cables shall be sized as shown on the Plans, or a minimum of No. 12 AWG.

Isolation from Existing Pipelines and Above-Grade Structures

Insulate the buried portion of pipeline from other metallic pipelines, reinforced concrete structures, and above-grade buildings or structures with insulating flanges and/or couplings.

Anodes

Protect ductile iron pipelines with anodes where required by soil conditions and where required by the Agency.

Galvanic anodes may be installed in groups of as many as 10 anodes connected to the pipe through Anode Test Stations (ATS). The number and size of anodes shall be determined by the pipeline diameter and length, and by the soil characteristics.

Mortar Coated Steel/Concrete Cylinder Pipe

Where cathodic protection is necessary, comply with NACE RP 0169 and RP0100.

Bonding of Pipe Joints

All buried, non-insulating, non-welded, joints of mortar coated steel or concrete cylinder pipelines shall be bonded with HMWPE insulated, stranded, copper cables, for electrical continuity. The joint bond cables shall be sized as shown on the Plans.

Isolation from Existing Pipelines and Above-Grade Structures

Insulating flanges and/or couplings should be installed to electrically isolate the buried portion of pipeline from existing metallic pipelines, reinforced concrete structures, above-grade buildings or structures, and dissimilar metal pipelines.

Cathodic Protection of Interior of Steel Water Storage Tanks

Provide automatically controlled impressed current cathodic protection for the interior surfaces of each tank following the recommended practice of NACE RP0388.

The criterion for protection shall be based on a tank-to-water potential, IR drop free, within a range of -0.850 volts to -1.100 volts related to a copper-copper sulfate reference

electrode. This criterion shall be maintained by an automatically controlled rectifier and an anode system.

In addition, base system capacity and performance on the following

Total surface area of the tank (Total surface area includes high water level in bowl and wet risers in elevated tanks 30 feet in diameter or larger.)

Type of coating and condition of coating (Total bare surface area to be protected will be a minimum of 25 percent of total surface area.)

Minimum current density of 0.5 milliamp/ft^2 of bare surface area.

Chemical analysis of water, including resistivity expressed in ohm-cm.

Susceptibility of tank to icing.

Minimum anode system life of 20 years.

Selection, dimensions, and layout of system components.

Impressed Current Systems

Workmanship and Installation

Impressed-current systems shall be installed by personnel who are specifically trained and qualified in the installation of cathodic protection systems. All work shall be in accordance with the following requirements:

Components of the cathodic protection system shall be installed in the manner and at the locations as shown on the design drawings prepared by the corrosion engineer.

Pressure entrance fitting shall be installed in accordance with AWWA D100, Section 3.13.

Welding, cutting, and coating shall be in accordance with AWWA Standards D100, D200, and D105.

Materials and equipment shall be inspected prior to installation. Any defective component shall be repaired or replaced.

Electrical work shall be in accordance with the National Electrical Code.

Lead wires shall be installed to prevent damage from abrasion.

Electrical connections within the tank shall be sealed to prevent water migration.

The rectifier shall be mounted and at convenient height (eye level) above grade for monitoring and service purposes.

All improvements required to bring A.C. power to the rectifier shall be provided.

Work provided by the cathodic protection contractor shall be completed in a clean and safe manner.

Energizing System

After the system is installed and the tank is filled, the Contractor shall provide startup service including energizing, testing, and adjusting the system for optimum performance. This startup service shall be in coordination with the Agency. In addition to the startup service, "as-built" drawings and three copies of an Owners Operation and Maintenance Manual shall be submitted the Agency.

All testing shall be conducted with a calibrated, portable, copper-copper sulfate reference electrode and a portable, high-impedance voltmeter. Measure a minimum of five locations. A corrosion engineer shall review and evaluate all test data in accordance with NACE standards.

[This page intentionally left blank.]

SECTION 8
EROSION CONTROL

General

The work under this article consists of furnishing all labor, equipment, materials, and performing all operations required to install erosion protection on the areas disturbed during the construction operation.

Comply with the Placer County Stormwater Management Manual, Chapter IX, to determine project requirements for sheet, gully, and channel erosion control.

Materials

Materials shall conform to the provisions in Section 20-2 of Caltrans Standard Specifications. The materials shall include fertilizer, soil, seed, straw, and other materials as approved by the Agency. Seed used shall be of a variety native to the area as recommended by the Soil Conservation Service.

Straw wattles shall be constructed with biodegrading mesh. Plastic mesh will not be allowed.

Execution

Preparation

Preparation shall include all work required to get the areas ready to receive the erosion control materials, including spreading straw over the area after fertilizing and seeding.

Topsoil shall be spread uniformly and shall be cultivated, if necessary, to a sufficient depth to break up any compaction resulting from the spreading operations.

Fertilizing and Seeding

Unless otherwise specified, fertilizing and seeding shall conform to the following requirements. Fertilizers and seed shall be uniformly spread over the area and shall be done in accordance with Sections 20-3.OA and 20-3.OA and 20-3.OB of Caltrans Standard Specifications or as approved by the Agency.

Applying Straw

Straw shall be uniformly spread over all areas receiving erosion control materials. Straw shall be placed after all other erosion control materials are properly placed. Straw shall be dispensed onto the areas using a power driven dispenser.

[This page intentionally left blank.]

SECTION 9
GUNITING

General

Work under this section includes furnishing, preparation, mixing, and placing of gunite as specified herein. Gunite shall be applied by the dry-mix process.

Shotcrete will not be allowed as a substitute for gunite.

References

The standards referenced below will be utilized in this application.

ASTM C33, Specification for Concrete Aggregates

ASTM C150, Specification for Portland Cement

ASTM 494, Specification for Chemical Admixtures for Concrete

Materials

Cement

Cement shall be clean, fresh, Type II Portland cement and shall conform to ASTM C150. Type III (High Early Strength) cement is also acceptable when authorized by the Agency.

Water

Water shall be clean and free from deleterious amounts of silt, oil, acids, alkali, salts, organic substances and shall contain no chlorides, calculated as Cl, in excess of 1000 ppm, or sulfates in excess of 1000 ppm. Water pressure shall be at least 15 psi above the air pressure at the nozzle.

Sand

Sand shall be washed, clean, sound and free of deleterious coatings, clay balls, wood, or other extraneous material and, at the time of batching, shall conform to ASTM C33, C88, and C131. Sand shall be furnished in the primary sizes specified in ASTM C33. Sand shall be hard, dense, durable particles of either sand or crushed stone regularly graded from coarse to fine. Gradation shall be adjusted for best performance as approved by the Agency. Sand shall have a moisture content between 3-6 percent.

Accelerator

No admixtures shall be added to the gunite mix except a liquid or powdered set accelerator. The accelerator shall meet the requirements of ASTM Designation C494, Type C, except for the restrictions on the time of initial set, and the percent of minimum compressive strength of control specimens over 7 days of age. The proposed set accelerator shall be tested for compatibility with the gunite mix and submitted for Agency approval. The maximum initial set time shall be 3 minutes, and the maximum final set time shall be 12 minutes. Use of calcium chloride will not be permitted.

Fibers

Polypropylene fibers shall be used when specified at a rate of 1.5 lbs per cubic yard.

Wire Reinforcement

Reinforce gunite with 6x6 10 gage welded wire fabric.

Execution

Proportioning and Mixing

Use a minimum of 7 sacks and a maximum of 8 sacks of cement per cubic yard of gunite. The basic proportions of the gunite shall consist of 1 part cement to 4 parts sand by weight. Contractor shall submit the proposed mix design, including admixtures, to the Agency for approval before beginning placement. Batch weight of the sand shall be on a saturated, surface-dry basis. Mix proportions shall be such that core-drilled, nominal three-inch-diameter cylindrical specimens of the gunite will pass a minimum unconfined compressive strength test of 4,000 psi at 28 days.

Use the dry-mix process for guniting. Thoroughly and uniformly mix the material in a dry state in an approved mixer for at least 90 seconds for 1 cubic yard of gunite, with an additional 30 seconds for each additional cubic yard of gunite. The mixture shall be uniform and shall be continuously supplied to the delivery equipment to assure uninterrupted operation. Dispose of mixes allowed to stand for more than one hour. Dispose of off site.

The equipment proposed for use shall be capable of mixing and delivering a high-quality, well-mixed gunite mixture with reliability. Provide sufficient quantity of compressed air at proper pressure to maintain a clean airflow adequate for sufficient nozzle velocity and for operation of a blow pipe for clearing away rebound. Maintain communication between the mixer operator and the delivery equipment operator at all times.

Preparation of Foundation

The foundation for areas to receive gunite shall be evenly graded before the mortar is applied and no point on the graded slope shall be above the slope of the plane shown on the Plans or directed by the Agency.

The areas shall be thoroughly compacted, with sufficient moisture to provide a firm foundation and to prevent absorption of water from the mortar, but shall contain no free surface water.

Existing facilities to receive gunite shall be trimmed to create smooth transitions and flows, cleaned and cleared of all vegetative growth, rocks, sediment and all other objectionable material to one foot beyond the limits of the gunite application. When shown on the Plans, joints, side forms and shooting strips shall be provided for backing or paneling. Ground or gauging wires shall be used where necessary to establish thicknesses, surface planes and finish lines.

Placement of Gunite

All gunite layers shall be built up to their specified thicknesses in passes so that no sloughing of freshly placed material occurs. Place each layer in one continuous operation except where there is evidence of sagging, excess moisture, or other defects. Cut out defective areas and replace them with fresh with satisfactory gunite. Final gunite thickness for each area will be specified by the Agency.

Thickness

Where repairing an existing gunite slab, match the existing thickness or 3" whichever is greater.

New work shall be placed a minimum of 6 inches thick or as shown on Drawings.

Reinforcement

Secure wire fabric to remain embedded at half the thickness of the final gunite slab during preparation and application. Overlap adjacent sheets of fabric by at least six inches in both directions. Loose mill scale, oil, or rust on the fabric will not be permitted.

Equipment and Crews

Foremen, machine operators, and nozzlemen employed in guniting operations shall be experienced on comparable projects and meeting the requirements of ACI 506. Generally, foremen must have 2 years of applicable experience and machine operators and nozzlemen must have 6 months of applicable experience. Nozzlemen who demonstrate adequate skill at gunite application may be approved by the Agency even if they do not have 6 months of experience. All equipment used for the guniting operations must be approved by the Agency. All batching equipment must be capable of performing accurate measurement to produce a uniform material. Weighing and flow meter devices shall be maintained within +/- one percent of the correct weight, volume, or flow rate throughout the range of use. Submit documentation of equipment testing and accuracy and receive Agency approval before guniting begins.

The gunite batching and mixing equipment as well as equipment required to deliver material to the nozzle shall be approved by the Agency.

Any personnel or equipment not approved for this type of guniting work according to the above requirements, shall immediately be removed by Contractor upon written notification by the Agency.

Batching and Mixing Temperatures

At the time of batching and mixing, the temperature of the mixture, prior to adding water, shall be above 38°F. The water temperature shall be adjusted by cooling, heating, or adding ice to obtain a gunite temperature of at least 45°F as discharged and less than 80° F as discharged. Temperature of the gunite as discharged, shall always fall between 45°F and 80°F.

Operation of Pneumatic Equipment

The nozzleman shall have complete and safe freedom of movement. A nozzleman's helper equipped with an air blow pipe shall attend the nozzleman in order to keep the work area free from rebound.

The nozzle shall be kept 2.5 to 3.5 feet from the application surface so that the material shall impinge as nearly as possible at right angles to the surface, except at interior corners. Loose sand or rebound shall be removed prior to placing a succeeding layer of gunite.

Rebound shall be kept to a minimum. Do not reuse rebound material.

Nozzle velocity shall be 275 to 500 feet per second for 3/4 to 1 inch nozzles, and 425 to 500 feet per second for 1.25-inch nozzles.

Work Stoppages

Placement shall be interrupted in case of sagging, excessive moisture, rebound pockets, or other defects. Before placement may be resumed, the bonding surface shall be processed in compliance with one of the following:

Alternate 1

Before initial set, all defective gunite shall be cut out, and all laitance shall be removed by carefully performed light brooming.

Alternate 2

After final set, loose rebound shall be brushed off, rebound pockets and other defective gunite shall be cut out, and all laitance shall be removed by dry sandblasting or high-pressure water jetting.

Construction Joints

Construction joints caused by work stoppages shall have tapered edges forming an angle of 30 degrees or less with the flat surface of the joint. In no case will square shoulders be allowed.

Clean-up and Disposal

Cleanup and disposal of waste gunite is the responsibility of the Contractor.

Repairs to Gunite

The surface of previously placed gunite shall be thoroughly sounded with a hammer to determine the location of any rebound pockets, lack of bond, or other subsurface defects. All such areas, sags or other defects shall be cut out and replaced with suitable gunite. All gunite which, in the opinion of the Agency, fails to comply with the provisions of this Section shall be chipped out and replaced with acceptable gunite by the Contractor at the Contractor's expense. Replacement wire fabric shall overlap existing wire a minimum of 1 square. If the wire fabric is left in place, it shall not be damaged.

Quality Control

Testing, Control, and Inspection

Sampling and quality control shall be the responsibility of Contractor. The Agency may carry out compression and other tests on the samples taken. The Agency will inspect, from time to time, all aspects of the work and may carry out tests on the gunite in place and on the batch weights, grading and moisture content of the aggregates. Contractor shall be required to remove gunite in those locations where representative test specimens fail to comply with these Specifications.

Fabrication of Test Panels

Test panels shall be used to demonstrate the strength of the gunite mix and the qualification of the nozzleman. Construct test panels at Agency request.

A test panel measuring 2 feet by 2 feet minimum or as directed by the Agency shall be constructed by application of gunite to a smooth wood or steel surface using the same equipment, air quantity and pressure, water content, materials and angles of material approach as will be employed for the Work. The test panels shall be fabricated by the nozzleman who will be employed for the Work. Application shall be not less than 3.5 inches in

thickness. One test panel must be shot prior to the start of work, and must be clearly marked with a number and date.

The test panels shall be protected against being disturbed for a period of 6 hours or as directed by the Agency, after which the panels may be tested by the Agency.

[This page intentionally left blank.]

SECTION 10
RIP RAP & SACKED CONCRETE

General

Provide riprap and sacked concrete materials as specified below.

Materials - Rip Rap

Unless otherwise specified on the Plans, rip rap shall be quarry run 4-inch to 8-inch angular rock, with no rocks larger than 12 inches in any dimension and less than two percent by weight passing a 4 inch sieve.

Flat or elongated shapes will not be accepted unless the thickness of the individual pieces is at least one-third of the length. Stone shall be sound, durable, hard, resistant to abrasion, and free from laminations, weak cleavage planes, and the undesirable effects of weathering. The stone shall be not disintegrate from the action of air, water, or the conditions to be met in handling and placing.

All material shall be clean and free from deleterious impurities, including alkali, earth, clay, refuse, and adherent coatings.

Execution - Rip Rap

Testing

The material, if in question, may be subject to the following tests and requirements:

Tests	Test Method	Requirements
Apparent Specific Gravity	ASTM C 127	2.20 Min.
Absorption	Calif. #206	4.2% Max.
Durability	Calif. #229	52 Min.

Materials - Sacked Concrete

Sacks for gunite foundation, headwalls, and slope or bank protection shall be 10 oz. burlap measuring 19 ½ " by 36" inside the seams when laid flat. Paper sacks will not be accepted. Concrete shall conform to Division 3 Section 2 of these Specifications. Sacks shall be filled with approximately ½ cubic foot of loosely placed concrete. Sacks shall be filled so as to leave room for folding the top of the sacks.

Execution - Sacked Concrete

Sacks shall be placed so they are horizontal or sloping towards the bank. Sacks sloping away from the bank will not be accepted.

When required by the Agency, drive one #3 reinforcing bar through each sack, and into sacks above and below. Minimum length of bars shall be 18 inches. Minimum embedment of bars shall be 3 inches. Do not leave ends of bar exposed. Do not drive bar into dirt or into joint between sacks.

[This page intentionally left blank.]

SECTION 11
COLD WEATHER/CLIMATE APPLICATION

General

Cold weather is defined as a period when the mean daily temperature falls below 40°F for three successive days or the daily low temperature is expected to fall or falls below 32°F.

Work during cold weather at any location shall be in accordance with the methods and materials indicated in this Section.

All work performed east of the Pacific Crest Divide shall conform to Cold-Climate Area materials, equipment, and execution. (See Standard Drawings for a map of the cold-climate application zone and the applicable Standard Drawings).

In the Cold Climate Application Zone, all pipelines and appurtenances for water shall be placed at least 48 inches below grade or as shown on Standard Drawings. Pipelines and appurtenances installed at depths of less than 48 inches below grade shall be installed with other acceptable means of freeze protection. Acceptable means include installation of rigid polystyrene insulation board with a minimum R value of 10 to three feet on either side of buried appurtenances in the ground, wrapping appurtenances in insulation blankets (specified below), heat tracing, or installation of vaults or boxes designed to prevent surface air from circulating against the appurtenances.

Materials

Concrete

Provide air entrainment of 6 to 7 ½ percent for ¾ -inch maximum size aggregate mix, or 6 to 7 percent for 1 ½ -inch maximum size aggregate mix.

Insulation Blankets

Insulation blankets shall conform to ASTM 1094 and shall have a minimum R rating of 10 when dry and 5 when wet. Install blankets in vaults against appurtenances carrying or containing water. Install the blankets to wrap entirely around appurtenances or to drape to the floor of vaults without gaps.

LED / LCD Readouts

Provide light-emitting diode (LED) readouts on instruments in cold-climate application zone work whenever possible. Where LED displays are not available, house liquid crystal displays (LCDs) in enclosures capable of maintaining the air temperature at least 50°F.

Execution

Trenching

When the ground has frozen, maintain separate material piles to ensure frozen material is not used as backfill. No frozen material shall be used as backfill.

If frozen material is used to provide loose fill over trench, after the material has been thawed for at least 30 days, return, level, and fill the cover.

Concrete Placement in Cold Weather

Protect concrete work from physical damage or reduced strength caused by frost, freezing actions, or low temperatures in compliance with ACI 306 and as below.

Water and aggregates may be preheated for cold-weather placement, but their temperature shall not exceed 150°F. All methods and equipment for heating water and aggregate shall conform to the requirements of ACI 306. Concrete mixture at the point of placement shall have a temperature of at least 50°F, and not more than 80°F.

Construction

No concrete shall contain frozen materials or materials containing ice or snow. Do not place concrete on frozen subgrade or subgrade containing frozen materials. Placement shall be delayed until the ground has fully thawed. When temperatures are expected to fall below 32°F the night before concrete is placed, all reinforcing steel, forms, and the ground shall be preheated for a minimum of 12 hours at a minimum temperature of 50°F.

Curing

When temperatures are expected to fall below 32°F at any time before the concrete has reached a strength of 1,000 psi, the concrete must be adequately protected against frost damage by heating blankets, straw, or insulation materials for a minimum of seven days. The concrete temperature shall at no time fall below 40°F based on recording temperature monitors placed at a maximum of 50 feet on centers, each way, and around the circumference of the floor, wall, roof slab, and wall footing. The Contractor shall provide heat as required to keep the concrete temperature as specified throughout the entire curing period of seven days.

When combustion-type heaters are used to maintain concrete temperatures within an enclosure, the exhaust gases shall be vented from the heater to the outside atmosphere so that the concrete is not exposed to the products of combustion.

SECTION 12
INDUSTRIAL ORNAMENTAL FENCING

General

Work Included

The work under this section consists of furnishing all labor, materials and appurtenances necessary for installation of the industrial ornamental steel fence system (Project specific see specifications).

System Description

The manufacturer shall supply a total industrial ornamental steel fence system. The ornamental steel fence system shall include all components (i.e., pickets, rails, posts, gates and hardware) required.

References

ASTM A653/A653M - Standard Specification for Steel Sheet, Zinc-Coated (Galvanized) or Zinc-Iron Alloy-Coated (Galvannealed) by the Hot-Dip Process.

ASTM B117 - Practice for Operating Salt-Spray (Fog) Apparatus.

ASTM D523 - Test Method for Specular Glass.

ASTM D822 - Practice for Conducting Tests on Paint and Related Coatings and Materials using Filtered Open-Flame Carbon-Arc Light and Water Exposure Apparatus.

ASTM D1654 - Test Method for Evaluation of Painted or Coated Specimens Subjected to Corrosive Environments.

ASTM D2244 - Test Method for Calculations of Color Differences from Instrumentally Measured Color Coordinates.

ASTM D2794 - Test Method for Resistance of Organic Coatings to the Effects of Rapid Deformation (Impact).

ASTM D3359 - Test Method for Measuring Adhesion by Tape Test.

Submittal

The manufacturer's submittal package shall be provided to the Agency for approval prior to ordering the fencing.

Product Handling And Storage

Coordinate with Agency Inspectors before the delivery of product at the job site, all materials shall be checked to ensure that no damages occurred during shipping or handling. Materials shall be stored in such a manner to ensure proper ventilation and drainage and to protect against damage, weather, vandalism and theft.

Materials

Steel material for fence framework (i.e. tubular pickets, rails and posts), shall be galvanized prior to forming in accordance with the requirements of ASTM A653/A653M, with minimum yield strength of 50,000 psi (344 MPa). The steel shall be hot-dip galvanized to meet the requirements

of ASTM A653/A653M with a minimum zinc coating weight of 0.90 oz/ft2 (276 g/m2), Coating Designation G-90.

The manufactured galvanized framework shall be subjected to a thermal coating process which includes, as a minimum, a pretreatment/wash (with zinc phosphate), an electrostatic spray application of an epoxy base, and a separate electrostatic spray application of a polyester finish. The base coat shall be a zinc-rich thermosetting epoxy powder coating (gray in color) with a minimum thickness of 2 mils (0.0508mm). The topcoat shall be a "no-mar" TGIC polyester powder coat finish with a minimum thickness of 2 mils (0.0508mm). The finish color shall be approved by the Agency.

The stratification-coated framework shall be capable of meeting the performance requirements for each quality characteristic shown in Table 1.

Material for fence pickets shall be 1" square x 14 Ga. tubing. The cross-sectional shape of the rails shall at a minimum have an outside cross-section dimension of 1.75" square and a minimum thickness of 14 Ga. Picket holes in the rail shall be spaced 4.715" O.C., Picket retaining rods shall be 0.125" diameter galvanized steel. Posts shall be a minimum of 2-1/2" square x 12 Ga. (See Table-2).

Fabrication

Pickets, rails and posts shall be precut to specified lengths. Rails shall be pre-punched to accept pickets. Pickets shall be predrilled to accept retaining rods.

Grommets shall be inserted into the pre-punched holes in the rails and pickets shall be inserted through the grommets so that predrilled picket holes align with the internal upper raceway of the rails. Retaining rods shall be inserted into each rail so that they pass through the predrilled holes in each picket.

Completed sections (i.e., panels) shall be capable of supporting a 600 lb. load applied at midspan without permanent deformation. Panels shall be biasable to a 25% change in grade.

Swing gates shall be fabricated using the same manufacture, panel material and gate ends having the same outside cross-section dimensions as the rail. All rail and upright intersections shall be joined by welding. All picket and rail intersections shall also be joined either by welding or by the same retaining rod process used for panel assembly.

Proposals to substitute fence systems that use welded connections of pickets to rails will be considered by the Agency on a case by case basis. At a minimum, substitute fence systems shall meet all the requirements of this section with the exception of paragraph "Fabrication" 1 and 2. Substitute fence systems that require field welding will not be considered.

Execution

Preparation

The new installation shall be laid out by the contractor in accordance with the construction plans.

Installation

Fence posts shall be set in accordance with the spacing shown in Table 2, plus or minus 1/2", depending on the nominal span specified. Gateposts shall be spaced according to the gate openings specified in the construction plans.

When cutting the rails immediately seal exposed surfaces by Removing all metal shavings from cut area. Applying zinc-rich primer to thoroughly cover cut edge and drilled hole, allowing curing time. Applying 2 coats of custom finish spray paint matching fence color.

Table- 1 Coating Performance Requirements

Quality Characteristics	ASTM Test Method	Performance Requirements
Adhesion	D3359 – Method B	Adhesion (Retention of Coating) over 90% of test area (Tape and knife Test)
Corrosion Resistance	B117 & D1654	Corrosion Resistance over 3500 hours (Scribed per D1654; failure mode is accumulation of 1/8" coating loss from scribe or medium #8 blisters
Impact Resistance	D2794	Impact Resistance over 60 inch lb. (Forware impact using 0.625" ball).
Weathering Resistance	D822, D2244, D523 (60°Method)	Weathering resistance over 1,000 hours (Failure mode is 60% loss of gloss or color variance of more than 3 delta-E color units).

Table- 2 Construction Dimension Requirements

STRAIGHT PICKET TABLE						
Span	**8' Nominal Rail**					
Post Size	2-1/2"	3"	2-1/2"	3"	2-1/2"	3"
Bracket Type	Industrial Flat Mount (BB301) or Industrial Universal Boulevard (BB302) (BB303)		Industrial Flat Mount (BB301)		Industrial Swivel (BB304)	
Post Setting ± ½" O.C.	96"	96-1/2"	96"	96-1/2"	97-1/2"	98"
Span	**6' Nominal Rail**					
Post Size	2-1/2"	3"	2-1/2"	3"	2-1/2"	3"

(Continued)

Bracket Type	Industrial Universal Boulevard (BB302) (BB303)		Industrial Flat Mount (BB301)		Industrial Swivel (BB304)	
Post Setting ± ½" O.C.	71-1/2"	72"	71-1/2"	72"	73"	73-1/2"

CURVED PICKET TABLE						
Span	**8' Nominal Rail**					
Post Size	2-1/2"	3"	2-1/2"	3"	2-1/2"	3"
Bracket Type	Industrial Flat Mount (BB301) or Industrial Universal Boulevard (BB302) (BB303)		Industrial Flat Mount (BB301)		Industrial Swivel (BB304)	
Post Setting ± ½" O.C.	94-1/2"	95"	94-1/2"	95"	96"	96-1/2"
Span	**6' Nominal Rail**					
Post Size	2-1/2"	3"	2-1/2"	3"	2-1/2"	3"
Bracket Type	Industrial Universal Boulevard (BB302) (BB303)		Industrial Flat Mount (BB301)		Industrial Swivel (BB304)	
Post Setting ± ½" O.C.	75"	75-1/2"	75"	75-1/2"	76-1/2"	77"

Appendix A -
Facilities Agreement Process

[This page intentionally left blank.]

PLACER COUNTY WATER AGENCY
PROJECT PLANS CHECKLIST

- ❒ Complete PCWA Project Review Application
  - ❒ Include Applicant's Signature
  - ❒ Include Fire Department Approval
- ❒ Complete PCWA Meter Application
  - ❒ Include Applicant's Signature
  - ❒ Include expected demands
  - ❒ Complete one application per unique meter size/expected demand combination for 5/8", ¾", and 1" meters. Prepare one application for each 1 ½" and larger meter.
- ❒ Refer to the Standard Specifications (including revisions) in preparing your project plans, and be sure to:
  - ❒ Include Owner's and Engineer's name and contact information (full address and telephone number) on the Title Sheet; this information must match that which is shown on the PCWA Project Application
  - ❒ Include an Engineer's stamp, or name and license number on all submittals.
  - ❒ Include the PCWA "Water Facilities" note in the plan set (refer to the PCWA Improvement Standards, Division 2, Section 4. D). PCWA will provide the PCWA Map No. during the plan check process
  - ❒ Include an approval signature block for the PCWA Engineer
  - ❒ Include reference to a benchmark, used for the survey control, that is referenced to National Geodetic Vertical Datum 1929. Assumed datum are not acceptable.
  - ❒ Use the Agency's Standard symbols in the plans.
  - ❒ Include an overall plan layout for the treated and raw water facilities, as applicable, in the plan set.
  - ❒ Include a plan and profile of PCWA's existing and proposed facilities related to the project. Include labels for pipe size, type, length, class, and restraint lengths.
  - ❒ Show proposed 20 foot wide PCWA easements (non-exclusive) where water lines are installed outside the public right of way or PUEs/MPEs <u>adjacent</u> to public right of way.
  - ❒ Show existing easements with recording information.

(Continued)

- ❒ Ensure velocity of water, during a fire flow event, is no more than 7 feet per second in mains (fire hydrant laterals excluded).
- ❒ Ensure tie-ins to existing PCWA facilities are identified and described.
- ❒ Ensure separations between PCWA facilities and other utilities are as described on Standard Drawing – S103, S104 and S105.
- ❒ Show PCWA standard drawing S101, Pipe Trench Bedding and Backfill Detail. All other PCWA drawings shall be incorporated by reference only.

FACILITIES AGREEMENT PROCESS

Prior to Beginning

The Agency's map files are available for the Applicant/Applicant's Engineers research at the Agency's Business Office at 144 Ferguson Road in Auburn during normal business hours.

PCWA's Standard Specifications are available on line at www.pcwa.net. Design Criteria, symbols, standard drawings and specifications are provided there.

Facilities Application and Design Phase

Applicant/Applicant's Engineer submits to Engineering Division a completed Application for PCWA Project Review signed by local Fire District and Applicant. Applicant submits 3 sets of improvements plans for the proposed work. Applicant submits the current processing fee and minimum deposit. Please contact the Agency's Engineering Division by phone at (530) 823-4886 or email at engineering@pcwa.net for current fee schedule.

Engineering will assign a Facilities Agreement number. The Facilities Agreement number will be the letters "FA" followed by the next sequential number from the previous Facilities Agreement.

The first plan submittal is reviewed by Agency. Applicants should allow up to eight weeks for the review. NOTE: In fairness to all project proponents submittals are reviewed on a first-in-first-reviewed basis. Schedule accordingly.

Applicant's Engineer is notified their reviewed plans are ready for pick up in the Agency's Business Center at the Engineering counter.

Applicant/Applicant's Engineer submits successive plan submittals (2 plan sets per submittal) until notified by the Agency that all comments have been addressed to the satisfaction of the Agency's Engineer.

After the Applicant/Applicant's Engineer have been notified that all comments have been addressed to the satisfaction of the Agency's Engineer, the Agency's Engineer will sign the reproducible cover sheet in order for the Applicant/Applicant's Engineer to continue processing the plans through other entities.

Facilities Agreement

The Applicant/Applicant's Engineer notifies the Agency that they wish the Facilities Agreement to be prepared and placed on an agenda for approval by the Board of Directors of the Placer County Water Agency. Regular Board meetings are typically held the first and third Thursday of each month. Allow four weeks minimum advance notice for your project to be placed on an agenda. It is recommended that the construction plans be complete and approved prior to drafting the Facilities Agreement, but it is not mandatory. Upon notification to prepare the Facilities Agreement and place it on the Board's agenda, the agreement will be prepared by the Agency and placed on the agenda for the next available Board Meeting.

After approval by the Board, two unsigned copies of the Facilities Agreement will be sent to the Applicant for execution of both copies and the payment of all fees and charges including the Water Connection Charges. Both copies of the Facilities Agreement, signed by the Applicant should be returned to the Agency along with the required fees and charges (amount shown in paragraph 1 of the Agreement). The Facilities Agreement will then be signed by the Agency.

If the Applicant fails to return the signed Facilities Agreement and pay the required fees and charges to the Agency within 90 days of the date of the Boards approval of the Facilities Agreement will become void. Should the approval become void and the Applicant wishes to resubmit, the Applicant notifies the Agency of the reason for not executing the Agreement and states when the Applicant wishes the Agreement to go back to the Board for another 90 day approval. The FA will be sent to the Board with the original FA number with a revision designation appended to the number.

Upon signing of the Facilities Agreement by the Chair of the Board one fully executed copy of the Agreement will be mailed to the Applicant. The second will be retained by the Agency.

Prior To Start Of Construction

Improvements plans shall be approved and signed by the Agency.

The Facilities Agreement shall be executed and returned to the Agency with the payment of all fees and charges.

The Applicant or the Applicant's contractor shall furnish the Agency with a certificate(s) of insurance and additional insured endorsement (ISO CG 2010) as satisfactory proof that the Applicant or the Applicant's contractor carries the insurance required by the Agreement and shall be approved by the Agency's Risk Manager.

Any pre-construction easements or property transfers required under the Agreement have been provided to and accepted for recording by the Agency prior to any construction of water facilities within the easement or transfer area.

The performance bond, if required under the Agreement, shall be submitted in the amount of 100% of the cost of the water facilities to be installed and shall be approved by the Agency's Finance Department.

If the installation of the Facilities is not commenced within one (1) year after the date of execution of the Facilities Agreement and completed and accepted by the Agency within twelve (12) months after that commencement date, the Agency shall have the right to terminate the Agreement at any time thereafter. Upon such termination by the Agency, the Agency shall refund the meter installation deposit, water connection charge (WCC), and any portion of the deposit made for engineering review and inspection costs that has not been used by the Agency prior to the date of such termination.

Construction Phase

All construction of facilities shall conform to Agency approved standards. For Projects that involve construction of typical Agency facilities the following milestones must be met:

Prior to any water facilities construction, a preconstruction meeting shall be scheduled and held with the Inspection Section of PCWA. This meeting will be used to review the project, any recent plan revisions, Contractor's insurance requirements, preconstruction easements, construction staking and general project construction parameters.

The Contractor shall provide the Agency with a 48 hour notification prior to start of construction of the Facilities.

Contractor shall notify the Inspection Section prior to 8:00 a.m. each day on which work will be performed on Facilities or facilities that affect the water system. The Inspection Section may be reached at (530) 823-4885.

The Contractor shall construct the Facilities in accordance with the PCWA approved plans and the PCWA Standards.

After the Facilities have been installed and inspected, the system shall be pressure tested, tested for continuity, chlorinated, flushed, tested and passed for bacteriological contaminants.

If the new system requires a connection to an existing PCWA system, a request for an outage notification must be processed. The outage notification requires a minimum of eleven (11) working days. However, outages, which require connection to crucial Agency facilities, may require much more notification time and advanced scheduling as determined by the Agency.

After a tie in has been completed, a final bacteriological test shall be performed.

Final paving, adjusting valve boxes to grade and presetting meters may take place after passing the bacteriological retest.

A final walk through and as-built mapping of the Facilities will be conducted with PCWA inspectors, contractor and other interested parties.

A punch list will be prepared.

Contractor shall repair or replace items on the punch list.

A final inspection will be made to assure the punch list items have been completed.

Project Closeout

Prior to the Agency's formal acceptance of the Facilities and providing water service to the project the Applicant is required to provide the following:

Easements or property transfers not provided prior to construction, for all water facilities.

The addresses for each lot, marked on a record map, or on a list indicating the address for each lot or parcel in the project.

A maintenance guarantee bond in the amount of 50% of the cost of the Facilities that were installed.

Completion of all "Punch List Items" to the satisfaction of the Agency.

Payment to the Agency for any monies owed plus a minimum deposit of five hundred dollars, as stated in the Facilities Agreement, for the one year maintenance warranty inspection costs.

Completion of any special condition in the Facilities Agreement.

To ensure compliance with the above requirements the following will be done:

Agency staff will map actual construction.

Agency inspectors will review the map and verify its accuracy.

Agency inspectors will create a punch list.

Agency inspectors will confirm completion of the punch list.

Agency inspectors will confirm the number of services and types installed.

Agency property specialist will review and determine the adequacy of the maps or easements provided by the Applicant.

Agency engineer will receive a list or map indicating the street address for each parcel served by the project.

Agency engineer will confirm the maintenance bond has been received in the correct amount and approved by Finance Department.

Agency engineer will confirm that deposit balance is equal to or greater than the amount stated in the specific Facilities Agreement.

Agency engineer will confirm the paid number of services agrees with the number installed.

Agency engineer will prepare a letter accepting the Facilities.

Agency inspector will review and validate letter.

Agency inspector will prepare letters notifying other jurisdictions of the acceptance of the Facilities.

Setting of Meters

When the Facilities to be accepted by the Agency as identified in the Facilities Agreement are formally accepted, service orders for only those water meters that have been requested by the Applicant are released to the Agency's Field Services Department for installation. Timing of meter installations is predicated upon existing work load conditions and could take up to six weeks.

A limited number of meters may be set prior to the acceptance of facilities. These meters are referred to as preset meters. Preset meters may only be set for establishment of common area landscaping or for model homes. Presets are not allowed for any other use. Occupancy of properties using preset meters is specifically prohibited by Agency rules and regulations. To have a meter preset, the Applicant must complete a Preset Meter Request and submit the request to customer service.

After notification from Customer Service the Agency's Field Services Department will set the meter.

Appendix B -
Encroachment Permit Sample Document

[This page intentionally left blank.]

ENCROACHMENT PERMIT SAMPLE DOCUMENT

Recording Request By
Placer County Water Agency
No fee required, pursuant to Gov't
Code § 27383.

And When Recorded Mail To
Placer County Water Agency
P.O. Box 6570
Auburn, CA 95604

T.____ N., R. _____ E., Sec. _____ 1/4

A.P.No: _____-_____-_____-_____

Project: _____

PCWA Map No.: _____-___-_____

Permit No: EP20_____ - _____

Encroachment Permit

To: (Name of Entity Receiving Permit) (Date)

Subject to all terms, conditions and restrictions written below or printed as general or special provisions on any part of this form.

Permission Is Hereby Granted To

(Description of activities allowed by permit)

This permit is to be strictly construed and no work other than that specifically mentioned above is authorized hereby. Performance of the work shall be deemed to be acceptance by the Permittee of all terms and conditions of this permit, attached and incorporated herein.

All work authorized by this permit must be completed by _____.

Approved:

_____ _____

Deputy Director of Technical Services Date

(signature must be acknowledged by a Notary Public)

[This page intentionally left blank.]

Appendix C -
Easement Submittal Information

[This page intentionally left blank.]

SUMMARY OF CALIFORNIA RECORDING LAWS

General

Any instrument, paper, or notice submitted for recording must be authorized or required by law to be recorded, meet the requirements of statute, and contain original signatures except as otherwise provided by law, or be originally certified by a government agency.

Any document submitted must indicate the title or titles of the document(s) contained therein. Titles should appear on the first page, directly below the space reserved for the Recorder.

Recording fees for documents which contain only 8 ½" by 11" pages will be the standard County Recorder's fee. However, for any document which contains a sheet or sheets which do not measure 8 ½" by 11", an additional fee, required by the County Recorder, for every page of that document will apply.**

Any document submitted for recording shall have at least a ½" margin on each vertical side. In addition, the top 2 ½" of the first page shall be reserved for recording information with the left hand 3 ½" used by the public to show the name of the person requesting recording and the name and address to which the document is to be returned following recording. The right hand portion of the space is for use by the recorder only.

If a document modified, releases, or cancels provisions of a previously recorded document, it must contain the recorders identification number of the prior document.

**** (PCWA Requires 8 ½" By 11" And 12 Font Times New Roman)**

Guidelines For Preparation Of New Forms

In addition to compliance with the requirements outlined above, any form developed for recording should also follow these general guidelines.

8 ½" by 11" single sheet of white paper, preferably 16 lb or heavier.

If multiple notary acknowledgements are used, they should be on separate 8 ½" by 11" sheets, and not stapled or taped to the document on half sheets.

Exhibits should appear on separate pages, be properly marked, and be referred to in the body of the main document. Exhibits, including plats, must have the ½ inch vertical margin.

All information required by the statute which provides for the creation of the document must be there. In addition, all recording requirements must be met.

[This page intentionally left blank.]

Note: Prior to using this form, contact PCWA at 530-823-4886 to get the most current form.

STANDARD GRANT OF EASEMENT FORM

Recording Request By:

Placer County Water Agency
No fee required, pursuant to Gov't
Code § 27383.

And When Recorded Mail To:

Placer County Water Agency
P.O. Box 6570
Auburn, CA 95604

T.___N., R.__E. SEC.___, ___1/4

A.P. No:

Project:

Map No.:

Grant of Easement

For Valuable Consideration, receipt of which is hereby acknowledged,

Name of Individual, Corp., Etc.

(hereinafter called "GRANTOR") hereby grants to the Placer County Water Agency, a public body, (hereinafter called "AGENCY") a non exclusive permanent easement in, on, over, under, and across that certain real property in the County of Placer, State of California, described in Exhibit "A" attached hereto and incorporated herein by reference, and depicted on Exhibit "B", the map attached hereto showing the boundaries of the easement. In the event of any conflict between the description of the easement in Exhibit "A" and its depiction on Exhibit "B", the description in Exhibit "A" controls.

The easement granted herein is a right-of-way to construct, reconstruct, maintain, repair, replace and operate any size water pipeline or pipelines, lined or unlined canals, open ditches and appurtenant facilities, including but not limited to metering devices, gate valves, electrical/electronic equipment including poles, antennae, solar panels and electrical cabinets and devices for controlling electrolysis, necessary to convey and/or meter water. GRANTOR further grants to the AGENCY:

(a) the right to grade the easement area for the full width thereof.

(b) the right of ingress and egress over and across GRANTOR'S remaining lands as described in that certain document, recorded on _____ in Book _____ at page _____ (or) document number-_____

_____ Official Records of Placer County, by means of roads and lanes thereon, if such there be, otherwise by such route or routes as shall cause the least practical damage and inconvenience to GRANTOR; provided further, that if any portion of Grantor's land is or shall be subdivided and dedicated roads or highways on such portion

shall extend to the easement area, this right of ingress and egress on GRANTOR'S remaining land shall be confined to such dedicated roads and highways;

(c) the right from time to time to trim and to cut down and clear away any and all trees, stumps, and brush now or hereafter in the easement area and to trim and cut down and clear away portions of any trees extending onto or over the easement area which may interfere with the exercise of the AGENCY'S rights hereunder; provided, however, that all trees which the AGENCY is hereby authorized to cut and remove, if valuable for timber or wood, shall continue to be the property of GRANTOR, but all tops, lops, brush, stumps, and refuse wood shall be burned, chipped, or removed at the discretion of the AGENCY;

(d) the right to install, maintain, and use gates in all fences which cross the easement area and the right to install Agency locks on existing or future gates installed within the easement area;

(e) the right to mark the location of pipelines and other underground facilities in the easement area by suitable markers set in the ground; and

(f) the right to line, seal, patch, or replace pipelines, canals, ditches, conduits and other facilities, installed in the easement area.

Encroachment by Grantor

Subject to application for and receipt of an encroachment permit from the AGENCY, GRANTOR reserves the right to use the easement area; provided, that GRANTOR shall not erect or construct any building or other structure in the easement area or cut and/or fill over any AGENCY pipeline, or appurtenant facilities in the easement area or drill or operate any well, or drill any holes for fence posts or other structures, or construct any reservoir or other obstruction in the easement area, or diminish or substantially add to the ground cover over the easement area, or otherwise use the easement area in any way that interferes with AGENCY's full enjoyment and use thereof. If issued an encroachment permit by the AGENCY,

Grantor may construct fences across or parallel to but outside the easement area, provided that GRANTOR shall provide a gate or gates of sufficient width to allow ingress and egress to the easement area by the AGENCY for personnel, trucks and equipment and keys to any locks on the gates.

Assignment

The provisions hereof shall inure to the benefit of and bind the successors and assigns of the respective parties hereto, and all covenants shall apply to and run with the land.

Signatory Page – Grant of Easement

Name	Date
Name	Date

(Signature(s) must be acknowledged by a Notary Public), (Document must be Accepted and Submitted to Escrow by the Agency)

Appendix D -
Pre-approved Products List

[This page intentionally left blank.]

PRE-APPROVED PRODUCTS LIST		Notes: (CWO=COLD WEATHER ONLY) 1. All products shall conform to the Agency's Standard Specifications. 2. Alternates will not be considered for items noted "No Equal". 3. All proposed alternate items are subject to Agency review and approval.		
Item		**Manufacturer**	**Model or Part No.**	**Spec. Sect. and Notes**
Access Covers				
	Hatch, Spring Assisted	Halliday Products	Submittal Required	
		Bilco	Submittal Required	
Air Vacuum Release Valve Appurtenances (See Valves - AVRV)				
	Air Vent Riser	Placer Water Works		
	AVRV Below Grade Box	Christy		
		Jensen		
Air Vent Riser		See Air Vacum Release Valve Appurtenances		
Backflow Prevention Devices (See State of CA list of approved devices)				
Bridge Manufacturers/Suppliers				
	Prefabricated	Hallsten Corporation - Sacramento, CA	Submittal Required	
		Insterstate Sales - Auburn, CA	Submittal Required	
	Railspan railroad flat cars	Skip Gibbs Company - Redwood Valley, CA	Submittal Required	
Boring, Jacking, and Tunneling Materials				
	Casing Insulator	PSI, Inc.	Model PE	Polyethylene material
		PSI, Inc.	Model A8 and A12	Steel (8" and 12")
		Cascade Waterworks Mfg.	Series CCS	
		Calpico, Inc.	Series M	

PRE-APPROVED PRODUCTS LIST		Notes: (CWO=COLD WEATHER ONLY) 1. All products shall conform to the Agency's Standard Specifications. 2. Alternates will not be considered for items noted "No Equal". 3. All proposed alternate items are subject to Agency review and approval.		
Item		**Manufacturer**	**Model or Part No.**	**Spec. Sect. and Notes**
	Casing Skid/Runner	Per Specification	Submittal Required	
	Casing Spacer	Per Specification	Submittal Required	
	Wing Cutter, Band, and Flare	Per Specification	Submittal Required	
Boxes and Vaults				
	Meter Box	Mueller/Hunt	Thermal-Coil Meter Box	18"Dia x 54" min. Depth
		Christy	B16 Utility Box, B30, B36 Utility Boxes	B30, B36 for meters 3" and larger
	Meter Box Cover	Mueller	28291 Lid	
		Christy	FL16D, FL30d, FL36D	
	Valve Box and Lid	Christy	G5	
		Jensen	G5	
Cathodic Protection				
	Anode Lead Wire	Per Specification		
	Cartridge/Sleeve for Thermite Welding	Cadwell		
		Thermoweld		
	Dielectric Isolator	Per Specification		
	Flange Gasket Isolation Kit	Per Specification		
	Impressed Current Equipment	Harco	Submittal Required	
		Corrpro	Submittal Required	
	Magnesium Anode	Per Specification		
	Reference Electrode	Per Specification		
	Test Station	Per Specification	Submittal Required	
	Weld Cap	Royston Labs		

PRE-APPROVED PRODUCTS LIST		Notes: (CWO=COLD WEATHER ONLY) 1. All products shall conform to the Agency's Standard Specifications. 2. Alternates will not be considered for items noted "No Equal". 3. All proposed alternate items are subject to Agency review and approval.		
Item		**Manufacturer**	**Model or Part No.**	**Spec. Sect. and Notes**
		Philips Petroleum		
Concrete, Gunite, Rip Rap, and Masonry				
	Grout	Per Specification		
	Gunite Set Accelerator	Sika Chemical Corp.	Sigunit Powder	Gunite/shotcrete set accelerator
	Keyed Masonry Retaining Wall	Keystone		
	Non Shrink Grout	Per Specification		
	Rip-Rap	Per Specification		
Copper Tubing & Joints				
	Joints	Mueller	Series 110 Compression Connection	
		Jones	Series J-2600	
		Ford	Pack Joint	
	Type K	Per spec		
	Type M	Per spec		
Enclosures for PRV				
		Safe-T-Cover		
Facility Marker Post or Flexibility Marker				
		Carsonite		
Filter Fabric				
		Per Specification		
Fittings, Couplings, Restraint, and Hardware				
	Grooved Coupling	Victaulic	FireLock	
	Compression Coupling	Smith Blair		
	Flange Coupling Adapter	Smith Blair		
	Flexible Coupling Expansion Joint	Smith Blair		

PRE-APPROVED PRODUCTS LIST		Notes: (CWO=COLD WEATHER ONLY) 1. All products shall conform to the Agency's Standard Specifications. 2. Alternates will not be considered for items noted "No Equal". 3. All proposed alternate items are subject to Agency review and approval.		
Item		**Manufacturer**	**Model or Part No.**	**Spec. Sect. and Notes**
	Joint restraint (DI)	EBAA Iron Inc.	Series 2100, 1700, 1200, 1100SD, 1000	
		Star Pipe Products	Stargrip Series	
		Uni-Flange	Series 1300	
	Tapping Sleeve	Muller	Stainless Steel Tapping Sleeve	
		Dresser	Style 630 SS Tapping Sleeve	
		Romac	STS420	
		U.S. Pipe	Stainless Steel Tapping Sleeve	
Gaskets, Flange				
	Isolating	Per Specification		
	Non-Isolating	U. S. Pipe		
Gaskets, for slip joints				
	To be supplied by the Mfg of the pipe.			
Locating Wire				
	Wire	Per Specification		
	Wire Splice Kit	Per Specification		
Manholes and Related Materials				
	Precast	Christy		
		Jensen		
		Teichert		
	Rim and Cover	Per Specification		
	Water Stop for manhole	Ram Neck		
Meter/Water Services				
	Meter Box and Lid	See Boxes and Vaults		

PRE-APPROVED PRODUCTS LIST		Notes: (CWO=COLD WEATHER ONLY) 1. All products shall conform to the Agency's Standard Specifications. 2. Alternates will not be considered for items noted "No Equal". 3. All proposed alternate items are subject to Agency review and approval.		
Item		**Manufacturer**	**Model or Part No.**	**Spec. Sect. and Notes**
	Service Saddle	Mueller	BR2B Service Saddle	AC and DI
		Smith and Blair	313 Service Saddle	AC and DI
		Smith and Blair	397 Service Saddle	PVC
		Romac	Style 202BS	
		Jones	J-979	
Nuts and Bolts				
		Per Specification		
Paints				
		Devoe	Submittal Required	
		Tnemec	Submittal Required	
Pipe				
	Brass	Per Specification		
	Ductile Iron	Griffin Pipe		
		Pacific States Pipe		
		U.S. Pipe		
	HDPE	Per Specification		
	Pretensioned Concrete	Ameron	Submit laying drawing.	
	PVC	Per Specification		
	Reinforced Concrete	Per Specification		
	Steel	Per Specification		
	Steel Cylinder	Ameron	Submit laying drawing.	
Pipe Supports				
		Anvil International		
Pressure Gauges				
		Ashcroft	4", Glycerine filled	

PRE-APPROVED PRODUCTS LIST	Notes: (CWO=COLD WEATHER ONLY) 1. All products shall conform to the Agency's Standard Specifications. 2. Alternates will not be considered for items noted "No Equal". 3. All proposed alternate items are subject to Agency review and approval.		
Item	**Manufacturer**	**Model or Part No.**	**Spec. Sect. and Notes**
Pressure Transmitter			
	Instrumentation Northwest		
Sealant between concrete and concrete or gunite			
	PRC	270	
	Multi-chem	MC 287	
Slide Gates			
	Hydro Gate		
	Halliday Products		
	Waterman		
Service Saddles			
	Ford	202B	
	Mueller	BR2B	
	Smith Blair	313	
	Jones	J-979	
Stops, Corp, Angle, Etc.			
Angle Meter	Mueller	Series 300 Ball Valve	
	Jones	J-1525	
	Ford		
Corp	Mueller	Series 300 Ball Corporation Valve	
	Ford		
	Jones	J-1500	
Tapping Saddles			
	Ford	Submittal Required	
	Romac	Submittal Required	
	JCM	Submittal Required	

PRE-APPROVED PRODUCTS LIST		Notes: (CWO=COLD WEATHER ONLY) 1. All products shall conform to the Agency's Standard Specifications. 2. Alternates will not be considered for items noted "No Equal". 3. All proposed alternate items are subject to Agency review and approval.		
Item		**Manufacturer**	**Model or Part No.**	**Spec. Sect. and Notes**
Valves				
	Actuator for butterfly valve	Pratt	MDT	Travelling nut type
	Air Vacuum Release, treated water	APCO Valve & Primer Corp.	Series 140C	
		Valmatic	VM-201C	
		Crispin	Series "C"	
	Air Vacuum Release, raw water	Crispin	X Series, Model UX31	
		A.R.I.	D-025 "SAAR" Short Vers.	
	Altitude	Cla-Val	Model 210-01 and 210-02	01 = 1 way flow 02 = 2 way flow
	Ball, brass	Flow Tek	Submittal Required	
	Ball, plastic	Asahi	Submittal Required	
	Butterfly	Pratt	2FII, MKII, HP-250	
		Clow	Series 4500	
		M & H	AWWA Butterfly Valves	
		U.S. Pipe	AWWA Butterfly Valves	
		Mueller	Lineseal III, Lineseal XP	
	Check, externally weighted swing	Mueller	Swing Type Lever and Weight Check Valve	
		American AVK Company	Series 41 Swing Check Valve	
	Drain Waste	Submittal Required		
	Gate	American AVK Company	Series 25 Resilient Wedge Gate Valve	
		Clow	Gate Valve	

PRE-APPROVED PRODUCTS LIST		Notes: (CWO=COLD WEATHER ONLY) 1. All products shall conform to the Agency's Standard Specifications. 2. Alternates will not be considered for items noted "No Equal". 3. All proposed alternate items are subject to Agency review and approval.		
Item		**Manufacturer**	**Model or Part No.**	**Spec. Sect. and Notes**
		American Flow Control	Series 2500	
		Mueller	A-2360	
		U.S. Pipe	A-USPO Resilient Wedge Gate Valve	
	Pressure Reducing	Cla-Val	Model 990	≥2",
		Cla-Val	Model 92-01	≥2"combination pressure reducing and sustaining valve
		Ross Valve	30T	≤2"
	Pressure Relief	Cla-Val	Model 50-01	
	Solenoid	Automatic Switch Company	Model 8210	
Wall Penetration Seals				
		Link Seal		
		Sigma	Omni Seal	
Water Quality Sampling Station				
		Ellipse No. 88		
End of Table				

Index

[This page intentionally left blank.]

Index

Abbreviations
  items of work, **15**, **40**
Accelerator, 113
Acceptance, 11, **17**
Access Manholes, 62
Admixtures, **58**, **61**, **113**
Agency, 11, 12, 13, 14, 15, 16, 17, 18, 19, 20, 23, 24, 25, 26, 27, 28, 29, 30, 31, 33, 34, 35, 36, 37, 38, 39, 40, 42, 43, 44, 45, 46, 47, 48, 49, 51, 55, 57, 58, 59, 60, 61, 63, 64, 65, 66, 67, 69, 71, 72, 73, 74, 75, 78, 79, 80, 83, 84, 85, 86, 87, 89, 97, 98, 99, 100, 101, 107, 108, 111, 113, 114, 115, 116, 117, 119, 123, 124, 129, 131, 132, 133, 134, 137, 143, 144, 148
Agency Engineer, 11, 18, 19, 72
Agency XE "Agency" Inspector, 123
Agency Inspector, 11, 72
Aggregates, 113
Altitude, 66, 154
Aluminum, **90**, **94**, **96**, **103**
Angle Meter Stops, 69
Anodes, 103, 106, 107
Applicant, 12, 13, 17, 18, 19, 20, 30, 39, 47, 48, 49, 129, 131, 132, 133, 134
Approved Backflow Prevention XE "Backflow Prevention" Device, 37, 46
Approved Devices, 42
Approved Plans, 18
Appurtenances, 60, 62, 64, 148
Automatic Control, 66, 104
Auxiliary Supply, 37
AWWA Standard, 12, 18, 24, 28, 37, 46, 55, 56, 57, 58, 59, 60, 61, 62, 63, 64, 65, 67, 68, 72, 74, 107, 108
Backfill, 12, 13, 72, 73, 83, 84, 86, 106, 130, 165
  Final, 13
  Haunching, 13, 83, 86
  Initial, 13, 83
  Intermediate, 13, 83
  Sand Slurry, 83, 84
Backflow Device, 24, 38, 43, 45, 70
  Air-Gap Separation, 37, 40, 43
  Approved Backflow Prevention Device, 37, 46
  Approved Devices, 42
  Double Check Detector Assembly, 38, 40
  Double Check Valve Assembly, 38, 40, 41, 43
  Double Check Valve Assembly, 41
  Reduced Pressure Principle Detector Assembly, 38, 40
  Reduced Pressure Principle Device, 38, 40, 41, 42, 43, 107
Backflow prevention
  Requirement; assemblies; inspection; notice;, **39**, **43**
Backflow Prevention, 15, 37, 38, 39, 42, 43, 44, 45, 46, 48, 70, 148, 165, 167
  Device Installation, 39, 43
  Device Removal, 44
  Testing and Maintenance, 43
Bacteriological Testing, 12
Ball, 65, 66, 153, 154
Bedding, 12, 13, 27, 71, 72, 83, 85, 86, 130, 165
Billing, 18, 45
Blow-off, 15, 29
Bonding, 107
Bore & Jack Crossings, 97, 99, 100
  Carrier Pipe, 12, 26, 97, 98, 99
  Casing, 12, 97, 98, 99, 100, 101
  Casing Installation, 100
  Center Spacers, 99
  End Caps, 101
  Jacking and Receiving Pits, 99
  Rotary Drilling, 100
Boxes, 67, 69, 73, 104, 149, 151
Brass Pipe, 64
Buried, 60, 62, 64, 67, 90, 94, 96, 103
Butterfly, 65, 67, 154
Bypass Piping, 24, 26, 31, 63
Calendar Days, 12
CalTrans Standards, 12
Canal Encasement, 12, 33
Carrier Pipe, 12, 99, 166
Casing, 12, 97, 98, 99, 100, 101, 148, 149, 166
Casing XE "Casing" Installation, 100
Cathodic Protection, 15, 103, 106, 107, 149, See Corrosion Control
Cement, **16**, **59**, **84**, **113**
Cement XE "Cement" \b concrete, 84
Cement Mortar Lining, 58, 59, 60, 61, 62, 73
Center Spacers, 99
Check, 15, 38, 40, 43, 66, 96, 154
Cleanup, **80**, **116**
Clearances, 30
Clearing
  and Grubbing, **88**
Clearing and Grubbing, 87, 88
Coal Tar, 90, 91
Coal Tar Epoxy, 90, 91
Coating, 60, 62, 89, 90, 91, 95, 96, 124, 125
  Applicator, 89

Bituminous Paint, **94**
Coal Tar, 90, 91
Coal Tar Epoxy, 90, 91
Dry Film Thickness Testing, 96
Epoxy, 90, 92
Field Touch-up, 96
Galvanized, 96
High-solids Epoxy, 93
Manufacturer, 90
Paint Mixing, 95
Polyamidoamine Epoxy, 91, 92
Polyurethane, 90, 93
Qualifications, 89
Synthetic Resin Primer, 94
Thickness, 96
Urethane, 90, 92
Coating System, 90, 91, 96
Coatings
water main, **123**
Cold Climat, 12, 27, 121, 167
Cold Climate, 12, 27
Cold Climate Area, 12, 27
Cold WEATHER Climate, 121
Cold Weather Concrete, 122
Compaction, 72, 73, 83, 85, 86, 106, 111
Completion, 133, 134
contract, **133, 134**
Compressive Strength, 77, 84, 113, 114
Concrete, **15**, **16**, 24, 28, 33, 34, 35, **55**, 58, 59, 62, 67, 71, 73, 75, 77, 78, 79, 80, 81, 83, 84, 89, 90, 94, 95, 97, 99, 101, 107, 113, 119, 121, 122, **150**, **152**
Air Entrainment, 77
Formwork, 77, 78
Slump Tests, 81
Suppliers, 77
Testing, 80
Concrete XE "Concrete" \b Cylinder Pipe, 15, 28, 58, 59, 62, 107
Connection, 12, 37, 38, 39, 70, 132, 150, 165
Connections, **37**, **72**
Connections to Existing Pipelines, 72
construction
Geotextile, **11**, **12**, **14**, **18**, **19**, **20**, **35**, **36**, **37**, **48**, **69**, **71**, **73**, **80**, **83**, **87**, **97**, **99**, **111**, **124**, **131**, **132**, **133**, **134**
Construction, **19**, **33**, **48**, **79**, 84, 86, **116**, **122**, **125**, **132**, **133**
Construction XE "Construction" \b joint, 116
Construction Joints, 79, 116
Construction XE "Construction" \b of, 19, 48
Construction Permitting, 17
Contamination, 37
Continuity Testing, 75
Contours, 48
Contract, **14**, **59**, **60**, **61**
contractor
Superintendents; labor, **108**, **124**, **132**, **133**
Contractor, 12, 14, 20, 48, 58, 60, 62, 70, 71, 72, 73, 74, **75**, 80, 85, 86, 89, 97, 100, 101, 108, 114, 115, 116, 122, **133**
Control, 12, 17, 26, 37, 39, 51, 64, 66, 70, 71, 72, 75, 85, 103, 107, 111, 116, 155
Corporation Stops, 31, 69
Corrosioin Control
Thermite Welds, 106
Corrosion Control, 26, 64, 72, 75, 103
Anodes, 103, 105, 106, 107
Cathodic Protection, 103, 106, 107, 108
Icing Tanks, 105
Impressed Current, 104, 108
Insulating Flanges, 107
Joint Bonding, 107
Non-Icing Tanks, 105
Rectifier, 104
Reference Electrodes, 105
Test Stations, 104, 107
County, 11, 12, 15, 16, 23, 29, 38, 47, 48, 111, 129, 131, 137, 143
Couplings, **68**, 69, **150**
Criteria, 23, 27, 33, 40, 131
Cross Connection, 12, 37, 39, 70
Control, 12, 37, 39, 70
Responsibility, 38
culverts, **83**
Curing, **77**, **79**, **80**, **122**
Customer, 12, 14, 37, 42, 45, 134, 166
Notification, 45
Service, 12, 37, 42
Days, 12, 14
Definitions, 11, 37
Density, **16**, **33**, **63**
Design, 11, 23, 27, 30, 33, 35, 36, 59, 61, 104, 106, 131
Criteria, 23, 27, 33
Standards, 11
Developer, 12
Development Length, 55
Device Installation, 45
Disinfection, 12, 24, 72, 74, 75
Distribution, 12, 14, 27, 30
Double Check Detector Assembly, 15, 38, 40
Double Check Valve Assembly, 40, 43
Drafting Standards, 47
Drawing, 12, 29, 34, 35, 38, 47, 67, 70, 72, 98, 101, 106, 130
Contours, 48
Elevations`, 48
Profiles, 49
Title Block, 48
drawings

Plans, **12**, **13**, **35**, **48**, **55**, **59**, **61**, **70**, **104**, **108**, **130**, **131**
Dry Barrel, 68, 167
Dry Film Thickness XE "Thickness" Testing, 96
Ductile iron, **27**, **28**
Ductile Iron Pipe, 16, 28, 33, 55, 107
Earthwork, 71, 83
Easements, 19, 34, 133
electrical
Ground rods, **70**, **83**, **96**, **103**, **106**, **107**, **143**
Electrical, **16**, **95**, **108**
Elevations, 48
Embankment Construction, 84, 86
Encasement, 12
End Caps, 101
Engineer, 11, **12**, **18**, 19, **48**, **51**, 72, **129**, **131**
Epoxy, 90, 91, 92
Equipment, **15**, **115**, **149**
erosion control
Clear plastic covering, **111**
Erosion Control, 111
excavation
Trench backfill; water main, **85**
Excavation, 20, 71, 83, 85, 88, 106
Expansion joint, 70
Expansion Joints, 70
Exposed, 60, 62, 74, 78, 90, 92, 94
Facilities, 11, 13, 17, 18, 20, 23, 24, 33, 48, 129, 131, 132, 133, 134
Facilities XE "Facilities" Agreement, 17, 20, 131, 132, 134
Facilities Agreement, 11, 13, 17
Facilities Agreement, 17
Facilities Agreement, 18
Facilities Agreement, 19
Facilities Agreement, 19
Facilities Agreement, 19
Facilities Agreement, 20
Facilities Agreement, 47
FACILITY AGREEMENT (FA), 127
Fee Title, 19
Fence, **124**, **166**
Fertilizer, 111
Fibers, 113
Field Service, 13, 134
Filter Fabric, 84, 150
Final, 13, 114, 133
Fire Flow, 13, 23
Fittings, 56, 57, 59, 61, 63, 150
Flange Gaskets, 68
Flanged, 56, 67
Flexible Couplings, 68, 69
Flushing, 29, 73, 74
Formwork, **78**
Foundation, 16, 85, 114
Galvanized, 90, 93, 94, 96, 123
Gate, 65, 68, 153, 154, 155, 166
Gear Actuators, 65, 67
general, **133**, **137**, **141**
General, 9, 11, 39, 45, 47, 51, 55, 72, 77, 83, 87, 89, 90, 97, 103, 111, 113, 119, 121, 141
General Connections, 72
geotextile, **84**
Globe, 66
Gravity, 13, 71, 74, 119
Grout, **150**
Grouting, 100
Grubbing, **87**, 88
Gunite, 113, 114, 115, 116, 150
Accelerator, 113
Fibers, 113
Repair, 116
Haunching, 13, 83, 86
Health Agency, 38
hydrants
Retaining walls, **29**, **47**, **48**, **49**, **68**, **74**
Hydrants, 29, 68, 75
Dry Barrel, 68
Wet Barrel, 68
Hydraulic Analysis, 27
Hydrostatic Testing, 73
Icing Tanks, 105
Impressed Current, 104, 108, 149
Improvement Standards, 12, 13, 21, 70, 129
Initial, 13, 83
Inspection, **44**, **116**, **133**
Inspector, 11, 72, **73**, **103**
Insulation Blankets, 121
insurance
Indemnification, **19**, **132**, **133**
Intent of, **23**, **33**
Interconnections, 26
Intermediate, 13, 83, 86, 91, 92
Inverted Siphons, 35
irrigation
Quick coupling valves, **13**, **27**, **41**, **42**, **49**
Jacking and Receiving Pits, 99
Joints, 28, 55, 56, 57, 61, 64, 70, 79, 97, 98, 99, 107, 116, 150
Landscaping, 27
Large Meter, 13
LCD Readouts, 121
Local Health Agency, 38
Locating, 70, 151, 165
Tape, 70
Wire, 70, 75
Locking, 56, 67, 165
manhole
Rebuild existing, **34**, **151**
Manholes, **151**

Manifolds, 30
Manufacturer, 58, 148, 149
Manufacturers
  certificate of compliance, **148**
Material, 13, 16, 28, 55, 57, 84, 87, 89, 91, 93, 124
  water main; structural plate; arch; underpass, **13, 16, 28, 55, 57, 84, 87, 89, 91, 93, 124**
Materials, **15, 33, 55, 58, 61, 77, 83, 90, 97, 103**, 105, **108, 111, 113, 119, 121, 123, 148, 151**
Mechanical, 15, 56, 57, 68, 84
Mesh, **17**
Meters, 18, 31, 48, 63, 69, 73, 75, 105
  Angle Meter Stops, 69
  Box Covers, 69
  Boxes, 69
  Large Meter, 13
  LCD Readouts, 121
Mortar, **15, 16**, 28, 33, 55, 58, **59**, 60, 61, 62, 72, 73, 78, 80, 95, 107, 114
Non-Icing Tanks, 105
Notification, 45
Nuts and Bolts, 55
or equal, **106**
Outage, 13
paint
  Moisture cured urethane, **78, 95, 96, 125**
Paint, **17, 95, 123**
Paint Mixing, 95
Painting, **17, 62, 89, 90, 95**, See Coating
Paints, **152**
Payment
  measurement and, **18, 134**
Peak Day Demand, 13
Peak Hour Demand, 13
Person, 38
Pipe, 12, **15, 16, 17, 28, 31, 34, 55, 56, 57**, 58, **59, 60, 61, 62, 63, 64, 70, 71, 74, 86, 99, 107, 130, 151, 152, 154, 155, 165, 166**
  Brass Pipe, 64, 95
  Concrete Cylinder Pipe, 28, 58, 59, 62, 107
  Copper Pipe, 31, 64
  Ductile Iron Pipe, 27, 28, 29, 30, 33, 35, 55, 56, 57, 68, 69, 72, 99, 107
  High Density Polyethylene Pipe, 33, 34, 63, 97, 99
  Mortar Lined and Coated Steel Pipe, 28, 33, 58, 60
  Polyethylene Pipe, 64
  Polyvinyl Chloride Pipe, 28, 30, 33, 34, 57, 64, 66, 67, 72, 94, 95, 98, 99
  Steel Pipe, 28, 33, 56, 58, 60, 65, 69, 74, 97, 98
Pipe XE "Pipe" \b Joint, 107
Pipe Joint
  Bonding, 107
  Design, 59, 61
Pipe Joint
  Bonding, 107
Pipe XE "Pipe" \b Joints, 107
Pipe Joints, 13, 61, 86, 99
  Bell and Spigot, 59, 61
  Buttstrap, 59
  Flanged, 56, 59, 68, 98
  Fusion Welded, 63
  Grooved-end, 56
  Harnessed, 13, 57
  Joints, 55
  Mechanical, 55, 56, 57, 68
  Push-on, 56, 57
  Restrained, 29, 61
Piping, 13, 31, 42, 55, 60, 62, 63, 64, 74, 107
  Appurtenances, 60, 62
  Buried, 60, 62
  Chemical Feed Piping, 64
  Coating, 58, 60
  Design, 61
  Distribution, 12
  Encasement, 62
  Exposed, 60, 62
  Fittings, 28, 30, 55, 56, 57, 58, 59, 60, 61, 62, 63, 64, 71, 72, 94, 95, 96, 100, 107
  Gravity, 13, 74
  Interconnections, 26
  Inverted Siphons, 35
  Polyethylene Encasement, 72, 107
  Pressure Class, 28, 55, 56
  Separation Requirements, 30
  Stulling, 58
  Test Pressure, 14, 57
  Transmission Pipe, 14, 103
  Treated Water Service Piping, 63
  Water Service, 31, 64
Plan Submittal, 18
Plans, 12, 13, 18, 19, 29, 36, 44, 47, 48, 49, 55, 56, 65, 67, 71, 72, 78, 83, 86, 87, 88, 104, 106, 107, 114, 119, 129
Plugs, 85
Plumbing, 23, 37, 39, 46, 55
Pneumatic Equipment, 115
Polyamidoamine Epoxy, 90
Polyethylene Encasement, 107
Polyurethane, 90, 93
Polyvinyl Chloride Pipe, 33, 64
Portland cement, **97, 113**
Posts, **124**
Potable Water, 13, 90, 91, 92, 93
Pre-Construction Requirements, 19
Premises, 38, 41, 42
Pressure Class, 28, 56
Pressure Gauges, 69, 152
Pressure Reducing, 25, 66, 155, 166
Pressure Reducing Stations, 25
Pressure Relief, **66, 155, 166**

Private Facility, 13
Profiles, 49
Project Submittals, 17, 49
Public Water System, 16, 38
Pumping Stations, 25
Push-on, 56
Qualifications, **89**
quantities
  Increased or decreased, **47**
Raw Water, 13, 17, 29, 33, 166
rebar
  Mechanical splices, **51**
Reclaimed Water, 38
Rectifier, 104
Reduced Pressure Principle Detector Assembly, 38, 40
Reduced Pressure Principle Device, 38, 40
Reference Electrodes, 105
Reinforcing steel, 78
Reinforcing Steel, 62, 77, 78, 80, 122
Removal, **44, 73**
Repair, 36, 44
Responsibility, 38
Restrained, 28, 29, 55, 56, 57, 59, 61
riprap
  Filter blanket, **119**
Riprap, 119
Riser Extensions, 67
Road Crossings, 35
Roadway, **42**
Rotary Drilling, 100
Rules and Regulations, 12, 14
Saddles, 67, 69, 153
Sand, 17, 83, 84, 113
Sand XE "Sand" Slurry, 83
SCADA, 17, 24, 25, 26
Seeding, 111
Separation Requirements, 30
Service, 12, 13, 14, 17, 20, 31, 37, 38, 63, 64, 69, 90, 91, 92, 93, 94, 111, 134, 152, 153, 165, 166, 167
  Connection, 38
  Piping, 63, 64, 70
  Saddles, 69
  Taps, 14, 64
Services, 11, 12, 24, 29, 30, 31, 37, 38, 39, 42, 44, 45, 47, 48, 63, 69, 74, 75, 134, 151
Shrubbery, 87
Sleeve, **149, 151**
Slump Tests, 81
Slurry, **83, 84, 86**
Standard Drawings, 11, 13, 14, 25, 29, 30, 31, 34, 55, 65, 68, 70, 71, 73, 75, 85, 121, 164, 165
Standard DRAWINGs LIST, 165
Standard Specifications, 11, 14, 35, 53, 71, 72, 77, 78, 86, 111, 129, 131, 148
Standards, 11, 12, 13, 14, 15, 17, 18, 19, 21, 28, 47, 48, 65, 68, 70, 78, 89, 97, 106, 108, 133
  coordination with contract, **15, 17, 18, 19, 129, 133**
State, 12, 14, 15, 30, 35, 37, 38, 42, 51, 77, 89, 90, 143, 148
Steel, **16, 17, 28, 33, 56, 58, 59, 60, 61, 72, 78, 90, 93, 95, 97, 98, 107, 123, 148, 151, 152**
Steel XE "Steel" \b Pipe, 17, 28, 33, 58, 97
Steel Storage Tank, 90, 93
Storage Facilities, 24, 40
Stormwater Management Manual, 111
Straw, 111
Structure, **95**
Structures, **17**, 36, 71, **107**
Subcontractor, 14
submittal
  Plan, contractor required, **51, 123, 131**
Submittal, 18, **123, 139, 148, 149, 152, 153, 154**
Submittals, **17**, 49, **89**
Suppliers, 77, 148
Surface Preparation, 17, 89, 91, 92, 93, 94, 95, 96
Surge Pressure, 14, 55
Suspension, 105
Synthetic Resin Primer, 90
System Shutdowns, 72
Tape, 70, 123, 125
Tapping Sleeves, 67
Taps, 64
Technical Specifications, 14
Telemetry, 26, 36
Test Pressure, 14, 57, 165
Test Stations, 104, 107
Testing, 12, 15, 43, 45, 71, 73, 75, 80, 116, 119
Testing and Maintenance, 43, 45
Thermite Welds, 106
Thickness, 57, 59, 62, 84, 96, 98, 115
Thrust Blocks, 55, 73
Tie-in, 68
timber
  Floor, **144**
Title Block, 48
Transmission Pipe, 14
Trashracks, 36, 71
Treated Water, 14, 17, 23, 29, 63
Treated Water XE "Treated Water" Service, 63
Trees, 87
Trench, 27, 85, 86, 130, 165
  Foundation, 85
  Plugs, 85
  Width, 85
Trench excavation, 85
Tunneling. See Bore & Jack Crossings
Urethane, 90, 92
Utility Location, 20

Valve, 15, 29, 38, 40, 43, 65, 67, 148, 149, 153, 154, 155, 165, 166, 167
Gear Actuators, 65, 67
Riser Extensions, 67
Valve Boxes, 67
Locking, 67
Valves, 24, 25, 26, 29, 30, 31, 34, 38, 48, 49, 63, 64, 65, 66, 67, 68, 69, 71, 72, 73, 94, 103, 106, 148, 154
Altitude, 66
Automatic Control, 66
Ball, 65, 66
Blow-off, 29
Butterfly, 65
Check, 66
Combination Air and Vacuum Release, 30, 65, 75
Gate, 65
Globe, 66
Pressure Reducing, 66
Pressure Relief, 66
Wall, 57, 98, 150, 155, 165, 166
Water, 11, 12, 13, 14, 15, 16, 17, 23, 24, 25, 26, 27, 29, 30, 31, 33, 37, 38, 39, 40, 41, 42, 43, 44, 45, 46, 48, 70, 85, 90, 91, 92, 93, 107, 113, 122, 123, 129, 131, 132, 137, 143, 148, 151, 155, 165, 166
Water Facility Markers, 70
water main, 29, 30, 31, 38, 74
Flushing and disinfection, **31, 74**
water mains
Odor and taste testing, **29, 30, 38**
Water quality, **30**
Water Quality Sampling Stations, 30
Water Service, 31, 45, 151, 165
Discontinue, 45
Water Supplier, 38
Water supply, 38
Water Supply, 23
Water Supply Pressure, 23
Water System Layout Drawing, 48
Water Treatment Plants, 24
Water Usage Rates, 23
Water User, 38
Weighing, **115**
Wells, 24, 26
Wet Barrel, 68, 166
Width, 85
Wire, 15, 17, 70, 77, 114, 149, 151, 165
cold drawn for reinforcing, 15, 17, 77, 114, 149, 151, 165
Wire Reinforcement, 114
Wood, **15**
Work, 14, 77, 78, 96, 108, 113, 116, 121, 123
Working Days, 14
Working Hours, 14
Working Pressure, 14
written notice
Notice, **44, 45**

[This page intentionally left blank.]

Division 4 - Standard Drawings

STANDARD DRAWINGS LIST

Dwg. No.	Title
100	
S101	Pipe Trench Bedding and Backfill
S102	Water Facility Marker
S103	Separation Regulations, Water Main Installation
S104	Separation Regulations, Nonpotable Main Installation
S105	Water Service Minimum Separation
S106	Valve and Well Installation
S107	Locking Valve Box
S108	Valve Cluster
S109	Locating Wire
S110	Valve Operating Nut Extension
S111	Thrust Block Details (For 150 PSI Test Pressure)
S112	Magnesium Anode Installation Detail
S113	Standard CCML Cut-In
200	
S201	Standard Meter Connection - Meters 1" and Smaller
S202	Standard Service Connection - Meters 1-1/2" and 2"
S203	Commercial Service Bypass for 1-1/2" and 2" Meters
S204	Standard Service Connection 3" - 4" Meter
S205	Meter Protection Wall
S206	2-1/2" And Smaller Metered Backflow Prevention Device
S207	Backflow Prevention Device 3" and Larger
S208	2" Blowoff Assembly
S209	4" Blowoff Assembly

Dwg. No.	Title
S210	Fire Hydrant/6" Blowoff Assembly (Wet Barrel)
S211	Air Vacuum Release Valve 1"- 2" (AVRV)
S212	Pressure Relief Valve Assembly
S213	Pressure Reducing Station Plan
S214	Pressure Reducing Station Section A
S215	Water Quality Sampling Station
300	
S301	Bridge Installation Over Canal
S302	Sewer Crossing Under Canal
S303	Waterline Crossing Over Canal
S304	Sewer Crossing Under Sewer
S305	Customer Irrigation Water Receiving Tank
S306	Customer Irrigation Water Hard-Piped Service
S307	Standard Open Channel Flow Manhole
S308	Manhole Frame and Cover
S309	Trash Rack Box
S310	Minimum Setback for Fences Parallel to Canals
S311	Air Vacuum Release Valve 1"-2" (AVRV) Raw Water
400	
S401	Water Symbols Legend
S402	Guard Post Detail
S403	Approved Methods for Filling Water Tanker Trucks
S404	Pipe Casing and Carrier Pipe Supports
S405	Wall Penetration
S406	Industrial Ornamental Fence
S407	Standard Fence Detail
S408	Standard Fence Gate Anti-Swing Details

Dwg. No.	Title
500	
S501	Cold-Climate Area Map
S502	Cold Climate Meter Pit for 1" and Smaller Meters
S503	Cold Climate Service 1-1/2" - 2" Meter
S504	Cold Climate Service 3" Meter & Larger
S505	Fire Hydrant Assembly (Dry Barrel)
S506	Cold Climate 2" Blow-Off
S507	Cold Climate 4" Blow-Off
S508	Cold Climate 1"-2" Air & Vacuum Release Valve
S509	1" Cold Climate Backflow Prevention Device

[This page intentionally left blank]

ITEM	DESCRIPTION
1	6" MIN. TOPSOIL.
2	FINAL BACKFILL, 90% MIN. COMPACTION.
3	INTERMEDIATE BACKFILL, 95% MIN. COMPACTION SEE ROAD-CONTROLLING ENTITY'S SPECIDICATIONS.
4	BEDDING, HAUNCHING & INITIAL BACKFILL, 90% MIN. COMPACTION.
5	3/4"-MINUS CRUSHED ROCK WRAPPED IN FILTER FABRIC WITH 18" MIN. OVERLAP WHEN ADDITIONAL FOUNDATION DEPTH IS REQUIRED.
6	LOCATING WIRE PER S109
7	12" WIDE WARNING TAPE.
8	PIPE SPRINGLINE.
9	3" MIN. ASPHALT CONCRETE, 8" MIN. CLASS 2 AGGREGATE BASE, OR AS REQUIRED BY PLACER COUNTY.

NOTES:

- **A** ROAD SECTION SHALL CONFORM TO ROAD-CONTROLLING ENTITY'S SPECIFICATIONS.
- **B** SAW CUT EXISTING PAVEMENT PRIOR TO FINAL REPAIR OR PER ROAD CONTROLLING ENTITY SPECIFICATIONS.
- **C** MOUND SOIL IN UNPAVED SECTION TRENCHING (2" PER FT. OF WIDTH.)
- **D** COMPACT HAUNCHING MATERIAL UNDER PIPE BEFORE PLACING ANY MATERIAL ABOVE PIPE SPRINGLINE.
- **E** ELECTRICAL, COMMUNICATIONS, OR GAS UTILITIES, REFER TO S104 FOR OTHERS.
- **F** PLACE PIPE LABEL UP.
- **G** PIPE AND APPURTENANCES TO BE THE GREATER OF 18" MIN. BELOW SUBGRADE OR 30" MIN. BELOW FINAL GRADE (48" MIN. IN COLD CLIMATE AREA). MAX. COVER SHALL BE 60" UNLESS SHOWN AND CALLED OUT ON PLANS AND APPROVED BY AGENCY.

MIN. TRENCH SIDEWALL DIMENSIONS

NOMINAL PIPE DIAMETER (IN.)	MIN. SIDEWALL (IN.)
1 1/2 - 8	6
12 - 24	75% X PIPE DIA.
≥30	PER PLANS

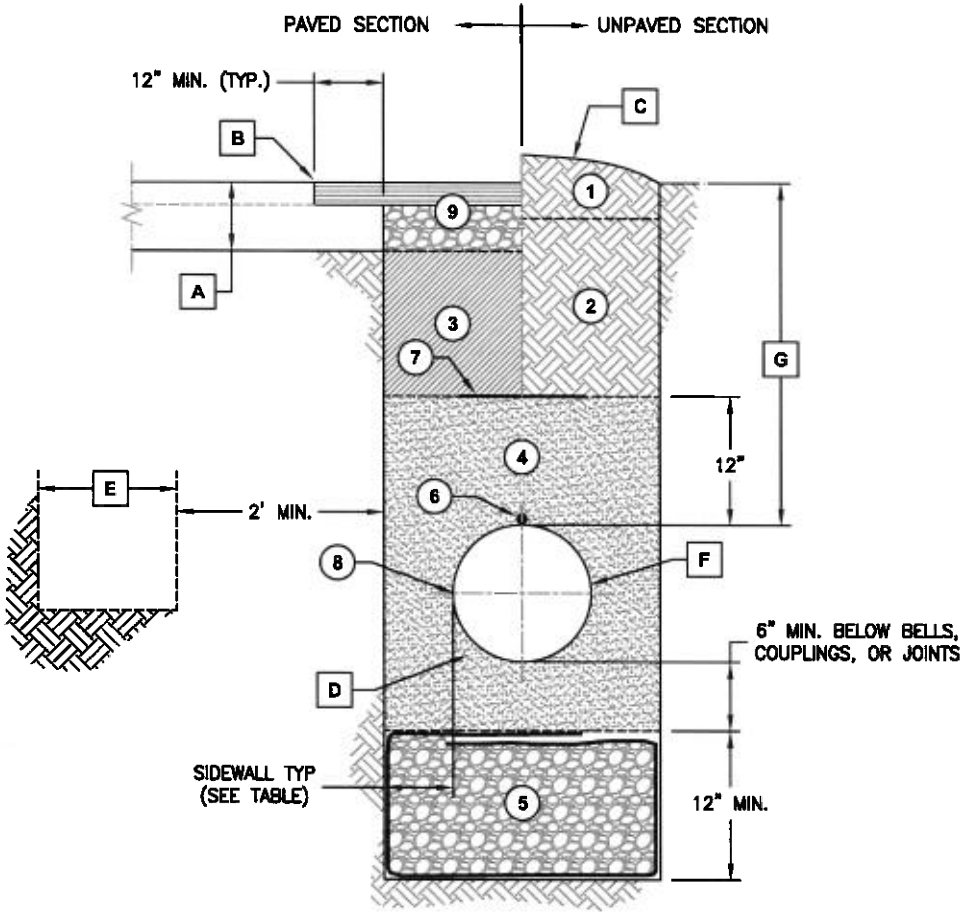

SECTION

AN APPROVED PRODUCTS LIST IS LOCATED IN APPENDIX E.

PIPE TRENCH BEDDING AND BACKFILL

DRAWING NO. *S101*

REVISION NO. *0*

DATE: 09/03/10

PCWA

APPROVED: Brian C. Martin (d)

BRIAN C. MARTIN, P.E.
DIRECTOR OF TECHNICAL SERVICES

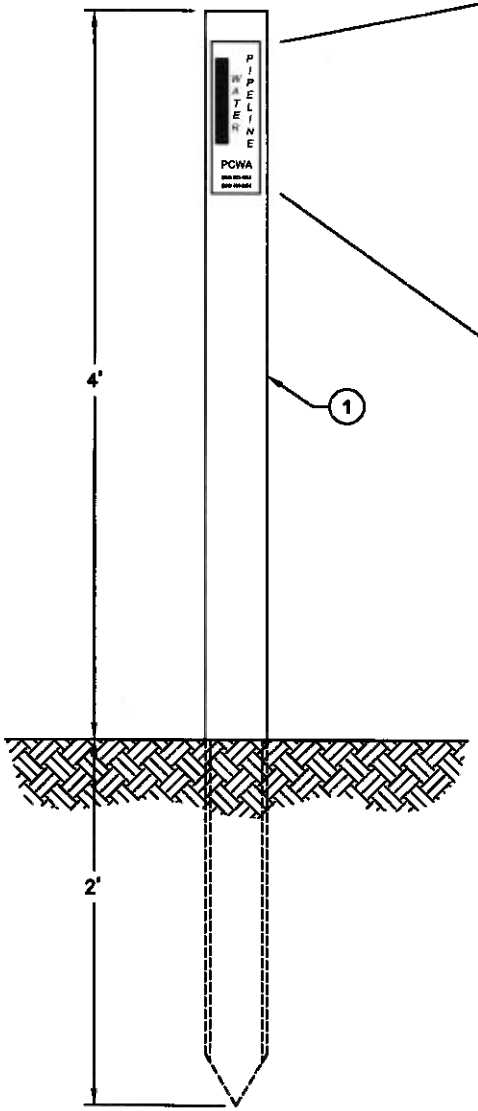

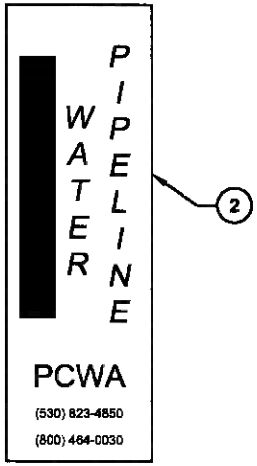

PRE-PRINTED STANDARD PCWA DECAL, SIDE 1

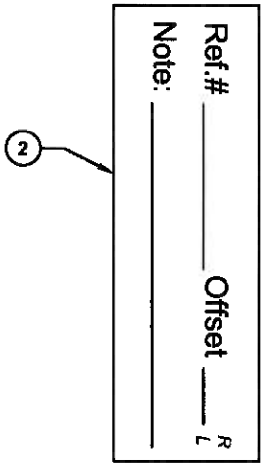

PREPRINTED ID DECAL, SIDE 2

ITEM	DESCRIPTION
1	BLUE FLEXIBLE MARKER, 3-1/2" - 4" WIDE, RIBBED AND DESIGNED FOR DUAL-SIDED DISPLAY, MIN. 15-YEAR WARRANTEE AGAINST EFFECTS OF SUN/WEATHER ON FLEXIBILITY OF MARKER AND COLOR FASTNESS OF MARKER AND DECAL.
2	DECAL LABEL TO FIT MARKER

AN APPROVED PRODUCTS LIST IS LOCATED IN APPENDIX E.

WATER FACILITY MARKER		DRAWING NO. *S102*
PCWA	APPROVED: Brian C. Martin (d) BRIAN C. MARTIN, P.E. DIRECTOR OF TECHNICAL SERVICES	REVISION NO. *0*
		DATE: 09/03/10

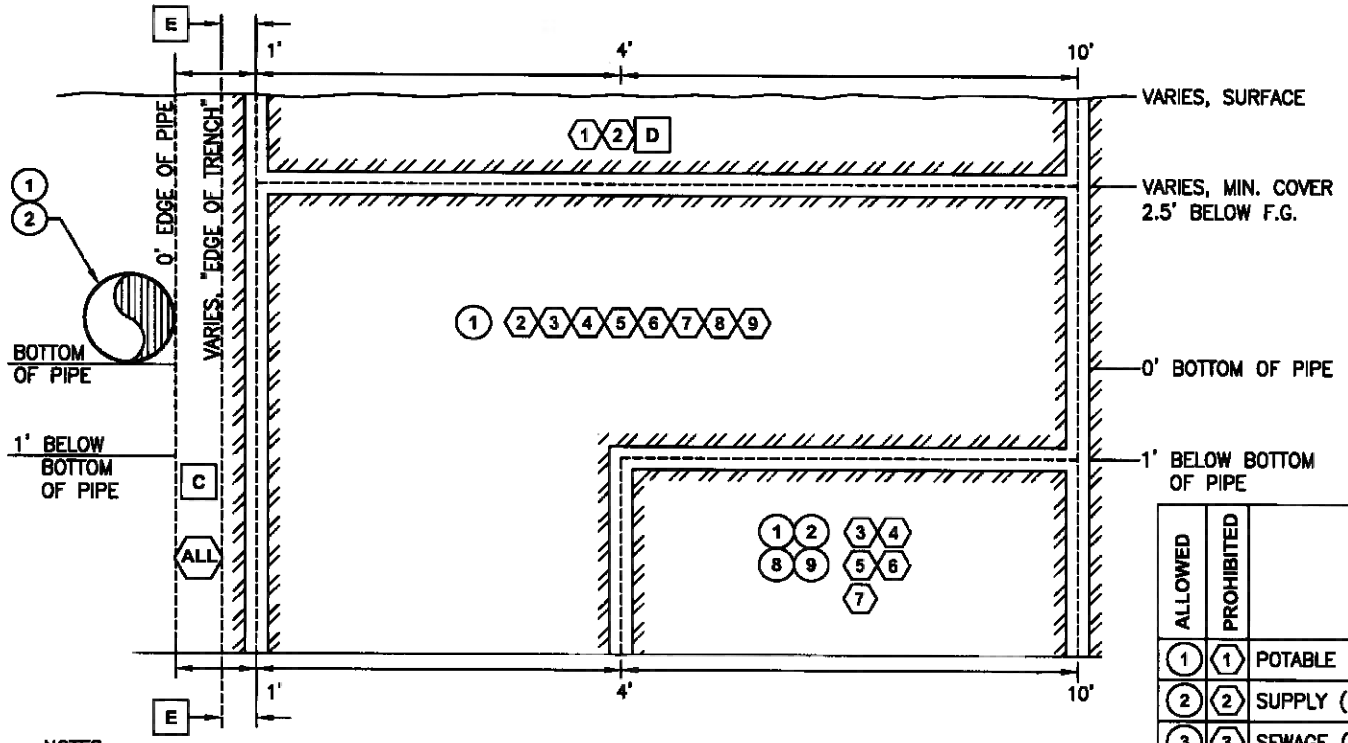

ALLOWED	PROHIBITED	KEY PIPELINE CARRYING:
1	1	POTABLE WATER
2	2	SUPPLY (RAW WATER FOR TREATMENT)
3	3	SEWAGE (UNTREATED)
4	4	SEWAGE (PRIMARY AND SECONDARY TREATED)
5	5	DISINFECTED SECONDARY 2.2 RECYCLED WATER
6	6	DISINFECTED SECONDARY 23 RECYCLED WATER
7	7	HAZURDOUS FLUIDS
8	8	DISINFECTED TERTIARY RECYCLED
9	9	STORM DRAINAGE

NOTES:

ADDITIONAL PROHIBITED ZONES:

A NO WATER MAIN SHALL BE INSTALLED WITHIN 100 FT. OF SANATARY LANDFILLS, WASTE DISPOSAL PARKS, OR HAZARDOUS WASTE DISPOSAL SITE.

B NO WATER MAIN SHALL BE INSTALLED WITHIN 25 FT. OF CESSPOOL, SEPTIC TANK, SEWAGE LEACH FIELD, SEWAGE PIT, UNDERGROUND HAZARDOUS MATERIAL STORAGE TANK, OR GROUNDWATER RECHARGE PROJECT SITE. ALL OTHER PIPELINES ALLOWED BEYOND 10 FT.

C SEE ALSO SA101 FOR MINIMUM TRENCH SEPARATION REQUIREMENTS FOR PARRALLEL PIPELINES.

D SEE APPLICABLE JURISDICTIONAL ENTITIES FOR THEIR REQUIREMENTS REGARDING ALL OTHER PIPELINES.

E 2 FT. MINIMUM SEPARATION FROM TRENCH WALL TO TRENCH WALL.

AN APPROVED PRODUCTS LIST IS LOCATED IN APPENDIX E.

PARALLEL PIPES SEPARATION & COVER

PCWA

APPROVED: Brian C. Martin (d)
BRIAN C. MARTIN, P.E.
DIRECTOR OF TECHNICAL SERVICES

DRAWING NO. S103

REVISION NO. 0

DATE: 09/03/10

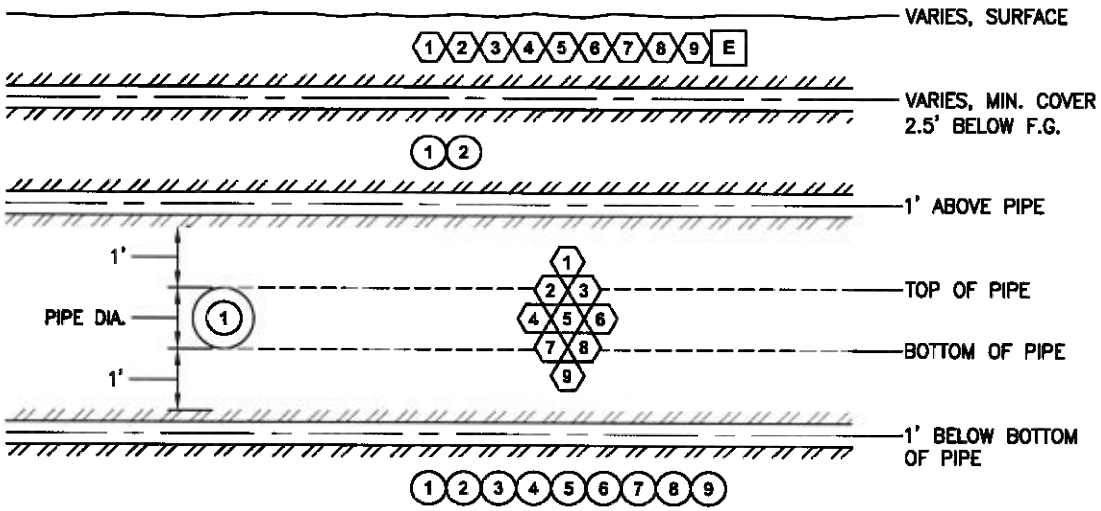

ALLOWED	PROHIBITED	KEY PIPELINE CARRYING:
1	1	POTABLE WATER
2	2	SUPPLY (RAW WATER FOR TREATMENT)
3	3	SEWAGE (UNTREATED)
4	4	SEWAGE (PRIMARY AND SECONDARY TREATED)
5	5	DISINFECTED SECONDARY 2.2 RECYCLED WATER
6	6	DISINFECTED SECONDARY 23 RECYCLED WATER
7	7	HAZURDOUS FLUIDS
8	8	DISINFECTED TERTIARY RECYCLED
9	9	STORM DRAINAGE

NOTES:

A ALL PIPES SHALL CROSS AT MINIMUM ANGLE OF 45° HORIZONTAL.

B ALL NEW PIPES SHALL HAVE NO JOINTS WITH IN 8' HORIZONTAL OF THE CROSSING.

C WITH AGENCY AND CALIFORNIA DEPTARTMENT OF PUBLIC HEALTH SERVICES APPROVAL, EXEMPTIONS FROM THESE SEPARATIONS MAY BE ALLOWED ON A CASE BY CASE BASIS.

D MINIMUM COVER OVER ALL AGENCY PIPES SHALL BE 2-1/2 FEET.

E SEE APPLICABLE JURISDICTIONAL ENTITIES FOR THEIR REQUIREMENTS REGARDING ALL OTHER PIPELINES.

AN APPROVED PRODUCTS LIST IS LOCATED IN APPENDIX E.

CROSSING PIPES SEPARATION AND COVER

PCWA

APPROVED: Brian C. Martin (d)
BRIAN C. MARTIN, P.E.
DIRECTOR OF TECHNICAL SERVICES

DRAWING NO. S104

REVISION NO. 0

DATE: 09/03/10

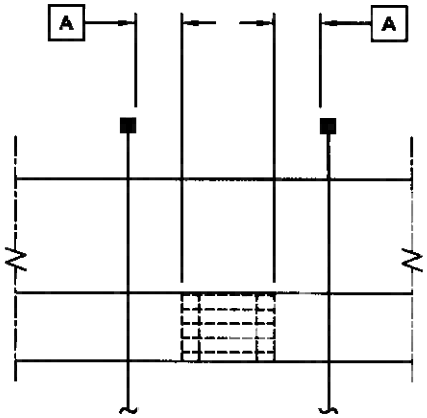

DROP INLET

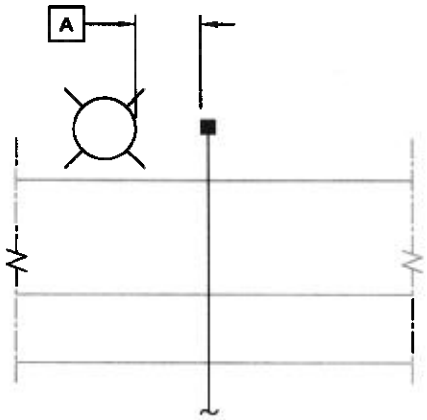

LIGHT POLE FOUNDATION

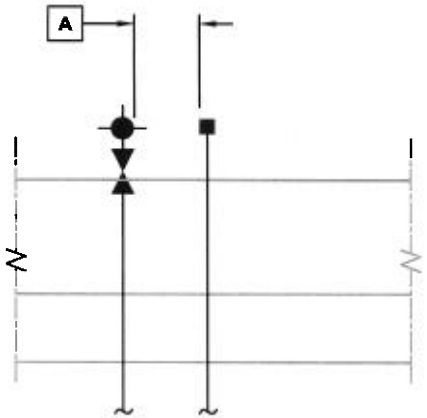

FIRE HYDRANT

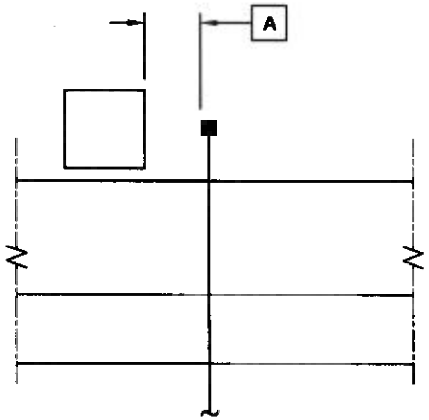

UTILITY PAD

A ALL WATER SERVICE LATERALS SHALL BE A MINIMUM OF 2' FROM ALL UNDERGROUND OR ABOVEGROUND STRUCTURES.

AN APPROVED PRODUCTS LIST IS LOCATED IN APPENDIX E.

WATER SERVICE MINIMUM SEPARATION	DRAWING NO. S105
PCWA — APPROVED: Brian C. Martin (d) BRIAN C. MARTIN, P.E. DIRECTOR OF TECHNICAL SERVICES	REVISION NO. 0
	DATE: 09/03/10

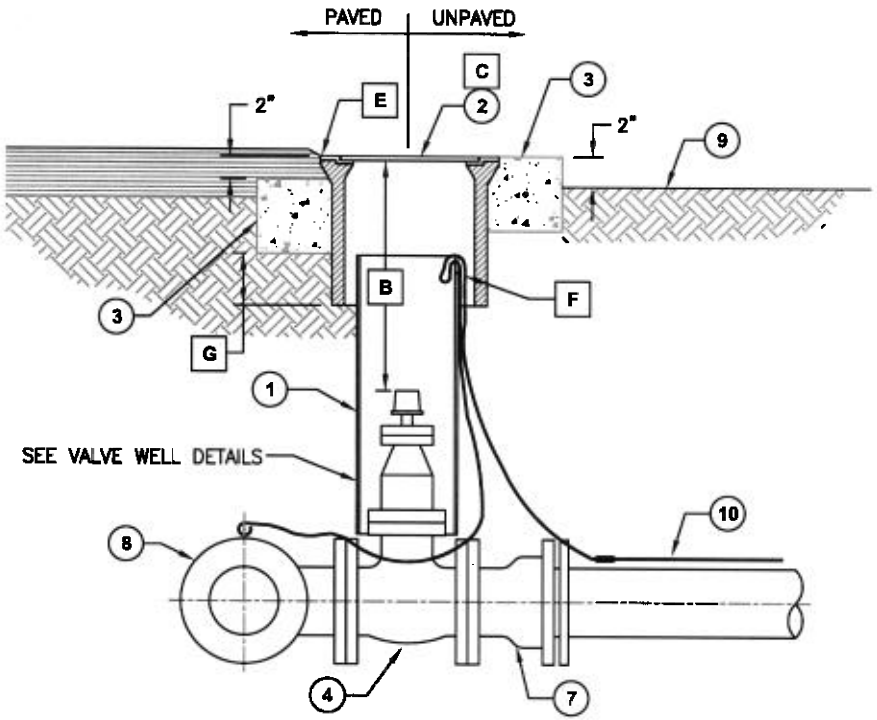

VALVE INSTALLATION

ALL VALVES ≥ 4" TO BE FLANGED

ITEM:	DESCRIPTION
1	8" SDR 35 PVC VALVE WELL EXTENSION (ONE CONTINUOUS LENGTH OF PIPE)
2	CONCRETE VALVE BOX WITH CAST IRON TRAFFIC LID
3	6"x6" CONCRETE PAD W/#4 REBAR
4	GATE VALVE
5	ACTUATOR
6	1 CUBIC FOOT CRUSHED ROCK
7	MJxFLG ADAPTER
8	TEE
9	FINISHED GRADE
10	LOCATING WIRE PER S109

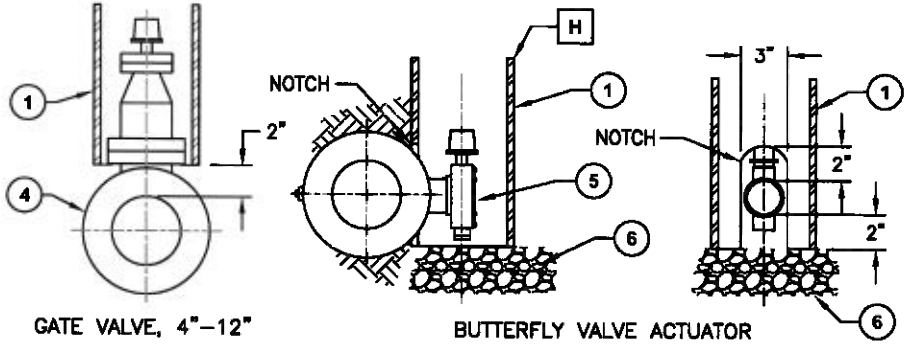

VALVE WELL DETAILS

NOTES:

- **A** SHOWN AS FLANGED GATE VALVE. 2" THD GATE VALVE AND BUTTERFLY VALVE APPLICATION ARE SIMILAR.
- **B** IF VALVE NUT IS MORE THAN 30" BELOW FINISHED GRADE, INSTALL AN OPERATING EXTENSION, PER S110.
- **C** FOR LOCKING LIDS, SEE S107.
- **D** PROVIDE MAG. ANODE PER S112.
- **E** SET VALVE BOX AT OR 1/4" BELOW PAVEMENT.
- **F** NOTCH EXTENSION TO PLACE WIRE.
- **G** 6" MIN. OVERLAP BETWEEN G5 AND VALVE WELL EXTENSION.
- **H** CENTER VALVE WELL EXTENSION OVER VALVE NUT.

AN APPROVED PRODUCTS LIST IS LOCATED IN APPENDIX E.

VALVE AND WELL INSTALLATION		DRAWING NO. S106
PCWA	APPROVED: Brian C. Martin (d) BRIAN C. MARTIN, P.E. DIRECTOR OF TECHNICAL SERVICES	REVISION NO. 0
		DATE:09/03/10

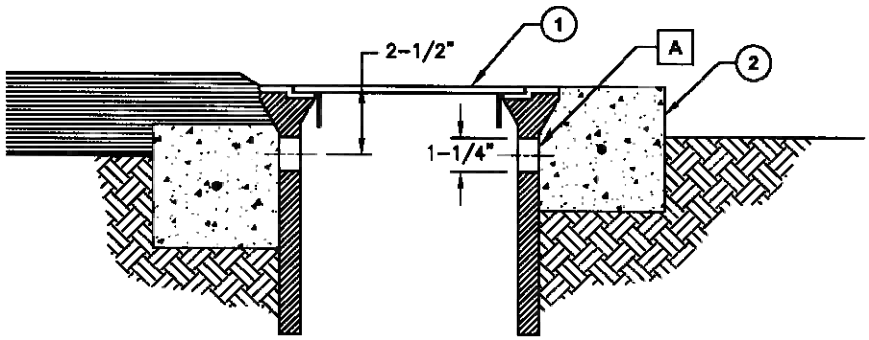

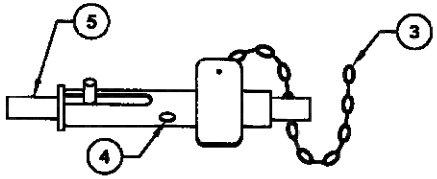

VALVE WELL LOCKING BAR

ITEM	DESCRIPTION
1	VALVE BOX AND LID PER S106
2	CONCRETE COLLAR W/#4 REBAR PER S106
3	12" LONG RETAINER CHAIN SECURED TO INSIDE OF VALVE WELL
4	PADLOCK HASP HOLE
5	SLIDING BAR, RB 1"

NOTES:

A CUT (2) 1-1/4"ø HOLES IN VALVE BOX 180 DEGREES APART. SEAL OFF HOLES WHEN CASTING CONCRETE COLLARS.

B SEE S106 FOR VALVE BOX INSTALLATION REQUIREMENTS.

AN APPROVED PRODUCTS LIST IS LOCATED IN APPENDIX E.

LOCKING VALVE BOX		DRAWING NO. *S107*
PCWA	APPROVED: Brian C. Martin (d) BRIAN C. MARTIN, P.E. DIRECTOR OF TECHNICAL SERVICES	REVISION NO. *0*
		DATE: 09/03/10

ITEM	DESCRIPTION
1	BUTTERFLY VALVE OPERATING NUT LOCATION IN VALVE WELL EXTENSION PER S106, TYP.
2	TRACING WIRE
3	SPLICE PER S109, TYP.
4	GATE VALVE, VALVE BOX, VALVE WELL EXTENSION PER S106, TYP.

NOTES:

A PROVIDE 12" LONG FLGxFLG SPOOL BETWEEN VALVE AND TEE/CROSS ON ALL BRANCHES IF A BFV IS USED ON ANY BRANCH.

B SHOWN FOR CROSS INSTALLATION, SIMILAR FOR TEE INSTALLATION.

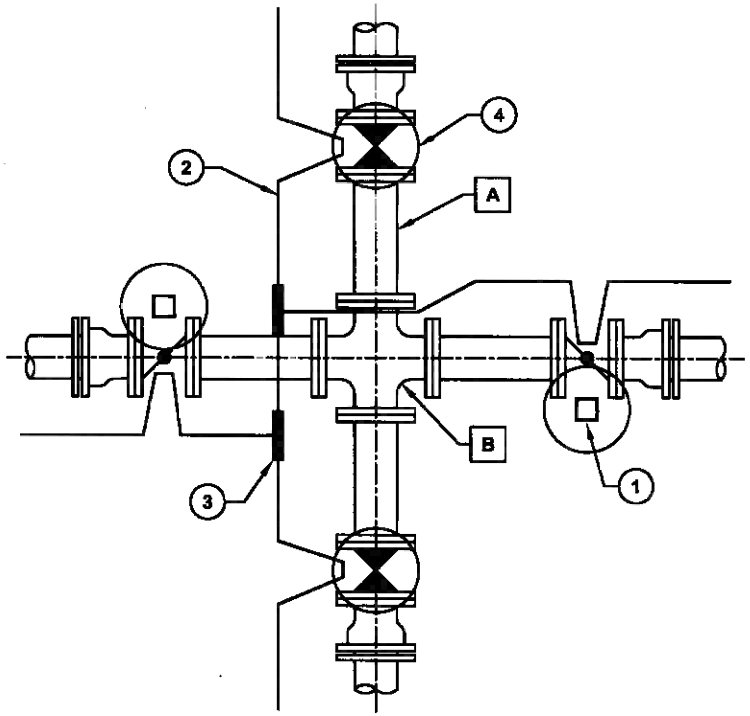

VALVE CLUSTERING ON TEES AND CROSSES

AN APPROVED PRODUCTS LIST IS LOCATED IN APPENDIX E.

VALVE CLUSTER	DRAWING NO. S108
PCWA — APPROVED: Brian C. Martin (d) BRIAN C. MARTIN, P.E. DIRECTOR OF TECHNICAL SERVICES	REVISION NO. 0
	DATE: 09/03/10

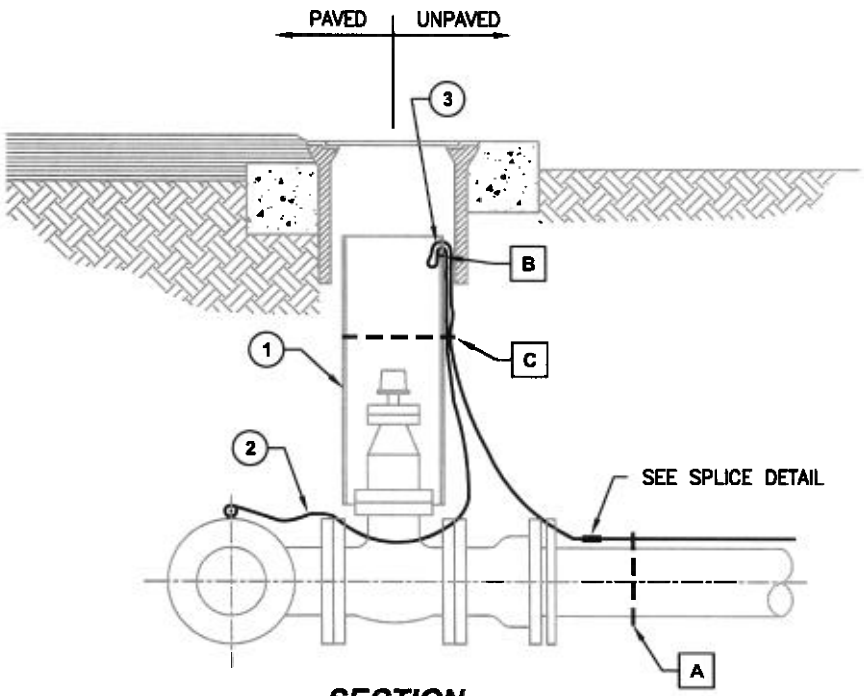

SECTION

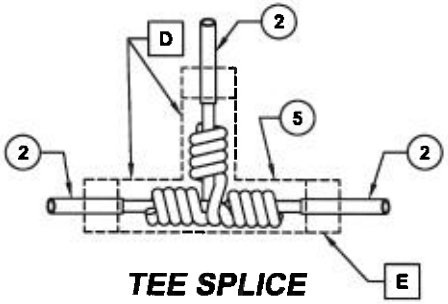

TEE SPLICE

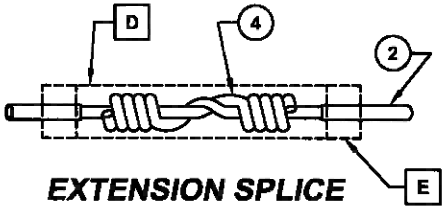

EXTENSION SPLICE

NOTES:

- **A** LOCATING WIRE TO BE TAPED AT 5 FT. O.C. ON TOP OF PIPE.
- **B** NOTCH VALVE BOX EXTENSION TO PLACE WIRE.
- **C** TAPE TRACER WIRE TO VALVE WELL EXTENSION, MAX. 2' INTERVALS.
- **D** SEAL WITH WATERPROOF UNDERGROUND HEAT SHRINK SPLICE KIT.
- **E** 1-1/2" OVERLAP MIN. BETWEEN INSULATED WIRE AND WATERPROOF HEAT SHRINK WRAP.
- **F** EXTENSION SPLICE – 4 RAPS PER WIRE – PER SIDE
  TEE SPLICE – (TWO WIRE) 4 RAPS PER WIRE – PER SIDE
  (THREE WIRE) 4 RAPS PER WIRE – PER SIDE
  (SEE DETAILS ABOVE)

ITEM	DESCRIPTION
1	VALVE BOX AND WELL EXTENSION PER S106
2	SOLID, INSULATED #10 T.H.H.N. A.W.G. COPPER WIRE, SOFT DRAWN
3	6" LOOP OF WIRE INSIDE VALVE WELL
4	EXTENSION SPLICE – STRIP WIRE, 8 COMPLETE RAPS/4 EACH SIDE
5	TEE SPLICE STRIPPED – SEE NOTE F

AN APPROVED PRODUCTS LIST IS LOCATED IN APPENDIX E.

LOCATING WIRE

DRAWING NO. S109

REVISION NO. 0

DATE: 09/03/10

PCWA

APPROVED: Brian C. Martin (d)
BRIAN C. MARTIN, P.E.
DIRECTOR OF TECHNICAL SERVICES

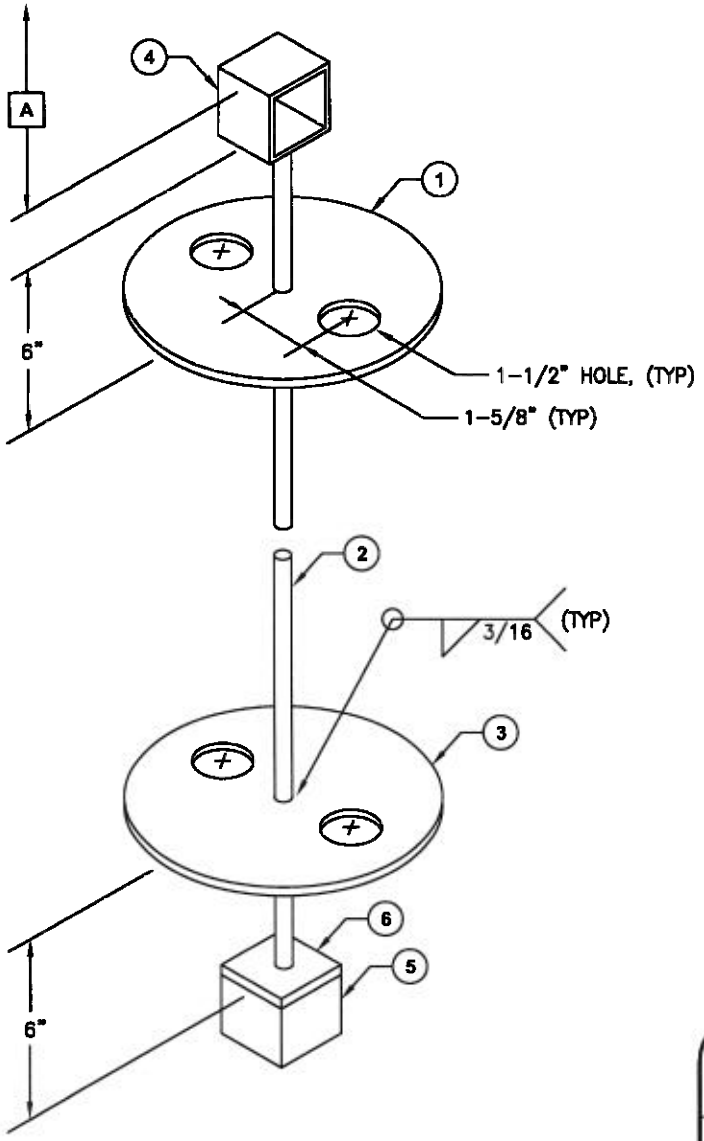

ISOMETRIC

ITEM	DESCRIPTION
1	PL 1/4"x7-1/2" O.D.
2	1" STEEL BAR STOCK
3	PL 1/4"x6-1/2" O.D.
4	TS 3/16"x2"x2"
5	TS 3/16"x2-1/2"x2-1/2"
6	PL 1/4"x2-1/2"x2-1/2"

NOTES:

A DEPTH OF TOP OF FABRICATED EXTENSION

VALVE BOX INSTALLATION	DEPTH FROM LIP OF VALVE BOX
NON-LOCKING	12" TO 18"
LOCKING	2-1/2" TO 6-1/2"

AN APPROVED PRODUCTS LIST IS LOCATED IN APPENDIX E.

VALVE OPERATING NUT EXTENSION

PCWA

APPROVED: Brian C. Martin (d)
BRIAN C. MARTIN, P.E.
DIRECTOR OF TECHNICAL SERVICES

DRAWING NO. S110

REVISION NO. 0

DATE:09/03/10

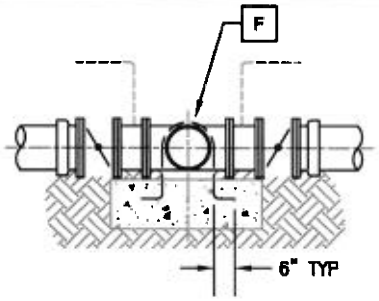

CROSS ELEVATION

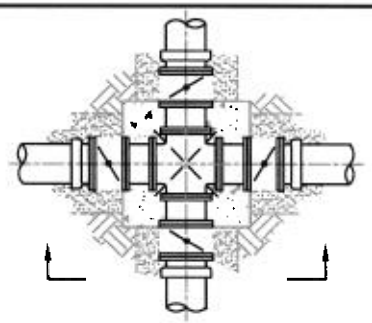

CROSS PLAN

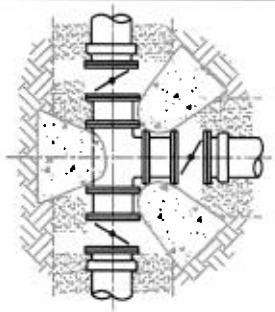

TEE

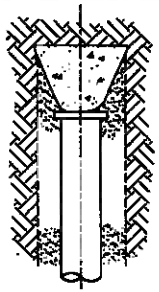

END OF LINE

NOTES:

- **A** THRUST BLOCKS ARE ALLOWED ONLY WHEN CONNECTING TO EXISTING FACILITIES OR WHERE SHOWN ELSEWHERE.
- **B** TEST PRESSURE = 150 PSI, SOIL BEARING PRESSURE = 2000 LBS/S.F., ADJUST SOIL BEARING PRESSURE AS NECESSARY, WITH APPROVAL FROM THE AGENCY ENGINEER.
- **C** THRUST BLOCKS TO BE CONSTRUCTED OF CLASS 'B' CONCRETE.
- **D** THRUST BLOCKS TO BE PLACED AGAINST UNDISTURBED SOIL.
- **E** JOINTS, FACE OF PLUGS, NUTS AND BOLTS TO BE KEPT CLEAR OF CONCRETE AND MUST BE OPERABLE WITHOUT DISTURBING THRUST BLOCK.
- **F** REBAR TO BE BENT 90° AT ENDS. REBAR NOT ENCASED IN CONCRETE SHALL BE EPOXY COATED OR COATED WITH TWO COATS OF KOPPERS 505, TNEMEC 46-450, OR EQUAL, 15 MILS EACH COAT.
- **G** THRUST BLOCKS SHALL BE PLACED AS SHOWN ON DRAWINGS; OTHER LOCATIONS MUST BE APPROVED BY AGENCY.

PIPE DIA. (in)	HORIZONTAL THRUST BLOCK BEARING AREA (S.F.)		
4 & 6	2.8	2.8	2.8
8	4.9	4.9	4.9
12	11.4	11.4	11.0

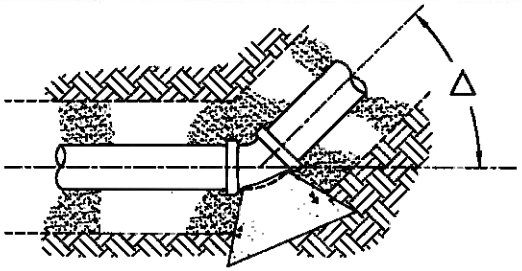

PLAN – HORIZONTAL THRUST BLOCK
NO SCALE

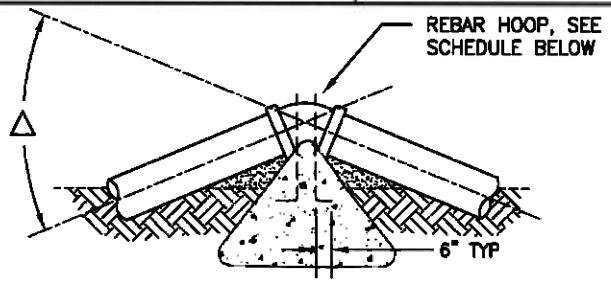

ELEV. – VERTICAL THRUST BLOCK
NO SCALE

PIPE DIA. (in)	HORIZONTAL THRUST BLOCK BEARING AREA (S.F.)				VERTICAL THRUST BLOCK VOL. OF CONCRETE (C.Y.)			
	Δ =11 1/4°	Δ =22 1/2°	Δ =45°	Δ =90°	Δ =11 1/4°	Δ =22 1/2°	Δ =45°	Δ =90°
4 & 6	1.0	1.1	2.2	4.0	0.3	0.5	1.1	2.0
8	1.0	1.9	3.7	6.9	0.5	0.9	1.8	3.4
12	2.2	4.4	8.7	16.1	1.1	2.2	4.3	7.9

REBAR SIZES

PIPE SIZE	Δ	REBAR
4, 6 & 8	0–90°	#5
12	0–22 1/2°	#5
4–12	45°	#7
4–12	90°	#8

AN APPROVED PRODUCTS LIST IS LOCATED IN APPENDIX E.

THRUST BLOCK DETAILS (FOR 150 PSI TEST PRESSURE)

PCWA

APPROVED: Brian C. Martin (d)
BRIAN C. MARTIN, P.E.
DIRECTOR OF TECHNICAL SERVICES

DRAWING NO. S111

REVISION NO. 0

DATE: 09/03/10

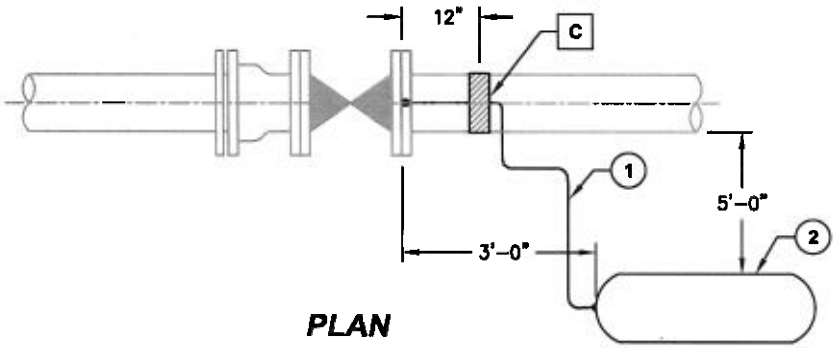

PLAN

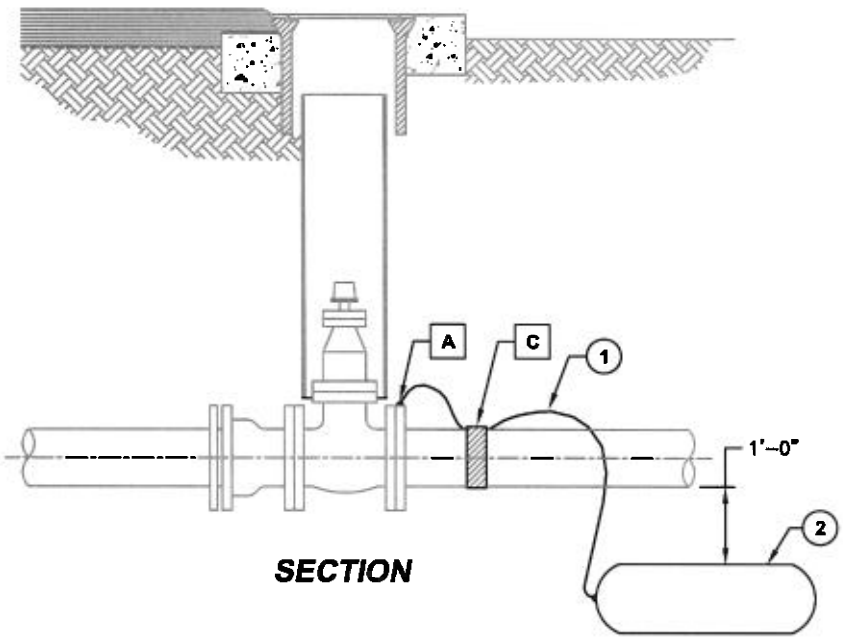

SECTION

ITEM	DESCRIPTION
1	#12 AWG COPPER WIRE WITH HMW/PE INSULATION (TYP.) 10' LONG.
2	17# MAGNESIUM ANODE

NOTES:

- **A** THERMITE WELD WIRE CONNECTION TO FLANGE OF VALVE BODY. COVER WITH PREFABRICATED WELD CAP. REPAIR COATING AROUND WELD AS NECESSARY.
- **B** SEE S106 FOR VALVE BOX DETAILS.
- **C** TAPE WIRE TO TOP OF PIPE W/ 2" WIDE TAPE. 2 FULL WRAPS MIN.

AN APPROVED PRODUCTS LIST IS LOCATED IN APPENDIX E.

MAGNESIUM ANODE INSTALLATION DETAIL

PCWA

APPROVED: Brian C. Martin (d)
BRIAN C. MARTIN, P.E.
DIRECTOR OF TECHNICAL SERVICES

DRAWING NO. S112

REVISION NO. 0

DATE: 09/03/10

ITEM	DESCRIPTION
1	24"xOUTLET SIZE DIP TEE (FLGxFLG)
2	BUTTERFLY VALVE (FLG)
3	24" STEEL TRANSITION PIECE (PExFLG)
4	INSULATING FLANGE AND TEST STATION
5	24" RESTRAINTED COUPLING
6	24" DIP ADAPTER (FLGxPE) W/ MJ JOINT RESTRAINT
7	CONC. THRUST WALL
8	4"x0.5" STEEL THRUST COLLAR WELDED TO BUTT STRAP

NOTES:

A ALL CCML PIPE CUT-INS SHALL BE DESIGNED BY A CA REGISTERED ENGINEER.

B THIS DETAIL IS SHOWN FOR A 24-INCH MAIN. REVISE DIMENSIONS FOR OTHER PIPE SIZES ACCORDINGLY.

C MIN. LAP LENGTH OF REBAR = 18"

D REBAR SHALL BE GRADE 40 UNLESS OTHERWISE NOTED

E BACKFILL SHALL BE COMPACTED TO 95% MAX. DRY DENSITY.

F MAKE CONNECTION TO EXISTING PIPE WITH STEEL BUTT STRAPS. REMOVE COATING AND EXPOSE STEEL CYLINDER. CONFIRM CYLINDER THICKNESS AND WELD BUTT STRAP TO CYLINDER ACCORDINGLY. FILL INTERIOR JOINT RECESS WITH CEMENT GROUT AFTER INSTALLATION OF STEEL TRANSITION FITTING.

G VALVE OPERATOR LOCATION, (TYP).

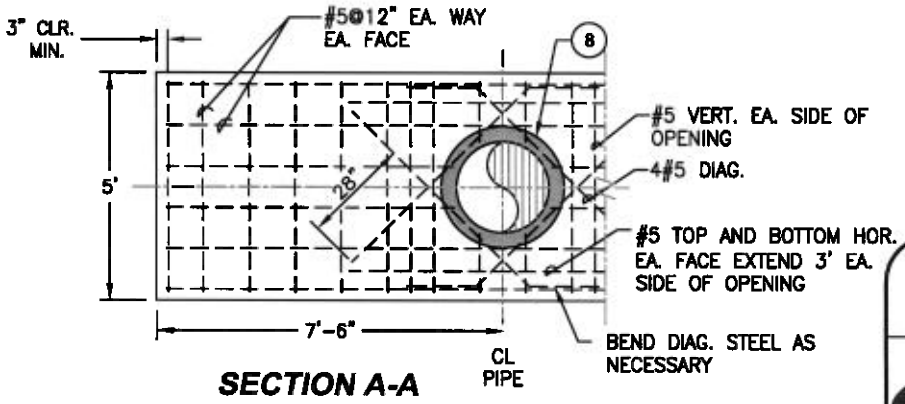

SECTION A-A

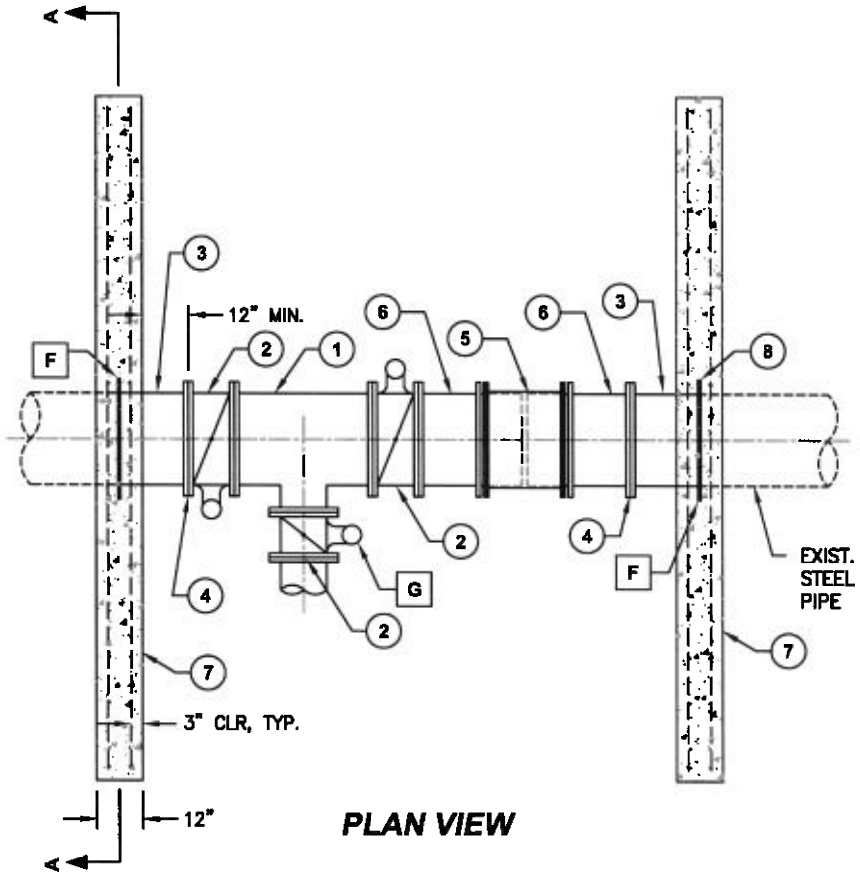

PLAN VIEW

AN APPROVED PRODUCTS LIST IS LOCATED IN APPENDIX E.

STANDARD CCML CUT-IN	DRAWING NO. S113
PCWA APPROVED: Brian C. Martin (d) BRIAN C. MARTIN, P.E. DIRECTOR OF TECHNICAL SERVICES	REVISION NO. 0
	DATE:09/03/10

ITEM	DESCRIPTION
1	METER BOX SHALL HAVE A MIN. OF 9" x 19-1/4" INSIDE DIMENSIONS. LID SHALL HAVE A HOLE AS SHOWN TO RECEIVE AN ERT.
2	3" LONG FIPxMIP BRASS STRAIGHT METER COUPLING (PIPE SIZE PER SPACER DIA. IN METER SPACER TABLE).
3	METER SPACER SCH 80 PVC NPT PIPE NIPPLE WITH 5 EA. X 1/4" DIA. HOLES THROUGH BOTH SIDES (PIPE SIZE PER SPACER DIA. IN METER SPACER TABLE).
4	1" COMPxFIP ANGLE METER STOP (FIP SIZE PER SPACER DIA. IN METER SPACER TABLE).
5	1" COMP. CORPORATION STOP (INSTALL HORIZONTAL ON THE WATER MAIN WITH OPERATING NUT STRAIGHT UP).
6	1" BRONZE SADDLE
7	GATE VALVE W/HAND WHEEL (PIPE SIZE PER SPACER DIA. IN METER SPACER TABLE).
8	24" NPT BRASS SERVICE TAIL AND CAP (PIPE SIZE PER SPACER DIA. IN METER SPACER TABLE).
9	1" TYPE "K" COPPER
10	6" OF 3/4" CRUSHED ROCK. EXTEND 6" ON ALL SIDES
11	MARK 2" HIGH "W" IN CURB FACE @ CL OF SERVICE FOR NEW CONSTRUCTION ONLY
12	LOCATING WIRE
13	12" WIDE WARNING TAPE
13	INSTALL WASHER ON EACH SIDE

NOTES:

- A METER TO BE PROVIDED BY AGENCY.
- B INSTALL METER BOX LEVEL, FLUSH WITH FINISHED GRADE. WHERE GRADE SLOPES EXCEED 10%, PROVIDE WALL PER S205.
- C 6" FROM BACK OF WALK OR 6" FROM BACK OF CURB WHERE SIDEWALK IS NOT PROPOSED.
- D FOR COLD CLIMATE REQUIREMENTS SEE S502
- E 30" MIN. COVER EXCEPT 24" MIN. COVER AT FLOW LINE OF GUTTER OR EP WITHOUT GUTTER.
- F METER BOXES AND LIDS SHALL BE MADE OF "FIBRELYTE", A POLYMER CONCRETE MATERIAL.
- G ERT HOLE SHALL BE 1 15/16"" DIA. WITH A 2 1/2" x 3/16" RECESS AS SHOWN.
- H ALL METER BOXES SHALL BE SET OUTSIDE OF PEDESTRIAN AND VEHICLE AREAS.

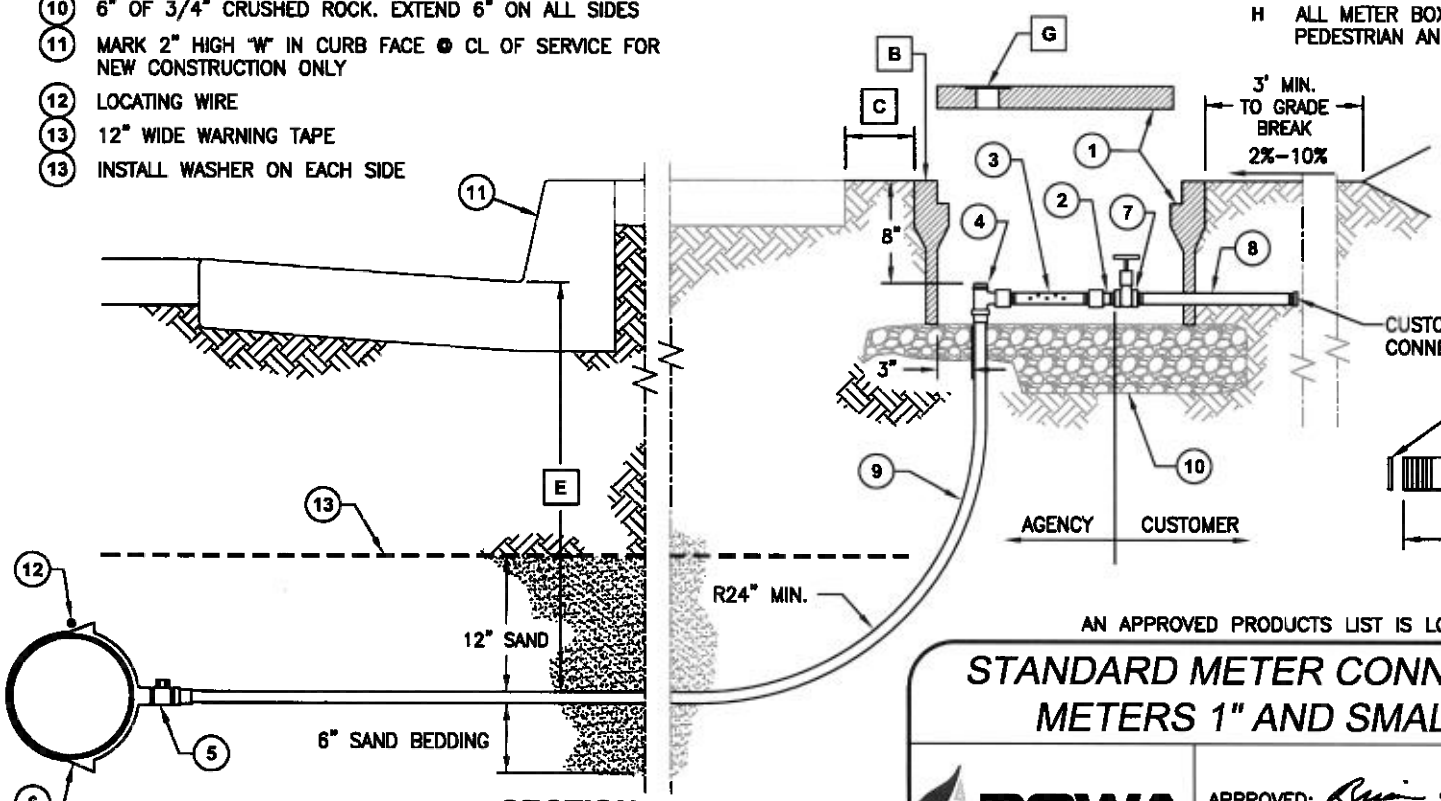

SECTION

METER SPACER TABLE		
METER SIZE	SPACER	
	DIA.	LENGTH
5/8"	3/4"	7-1/2"
3/4"	3/4"	7-1/2"
1"	1"	10-3/4"

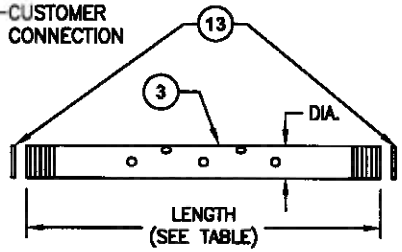

METER SPACER

AN APPROVED PRODUCTS LIST IS LOCATED IN APPENDIX E.

STANDARD METER CONNECTION METERS 1" AND SMALLER

PCWA

APPROVED: Brian C. Martin (d)
BRIAN C. MARTIN, P.E.
DIRECTOR OF TECHNICAL SERVICES

DRAWING NO. S201

REVISION NO. 0

DATE: 09/03/10

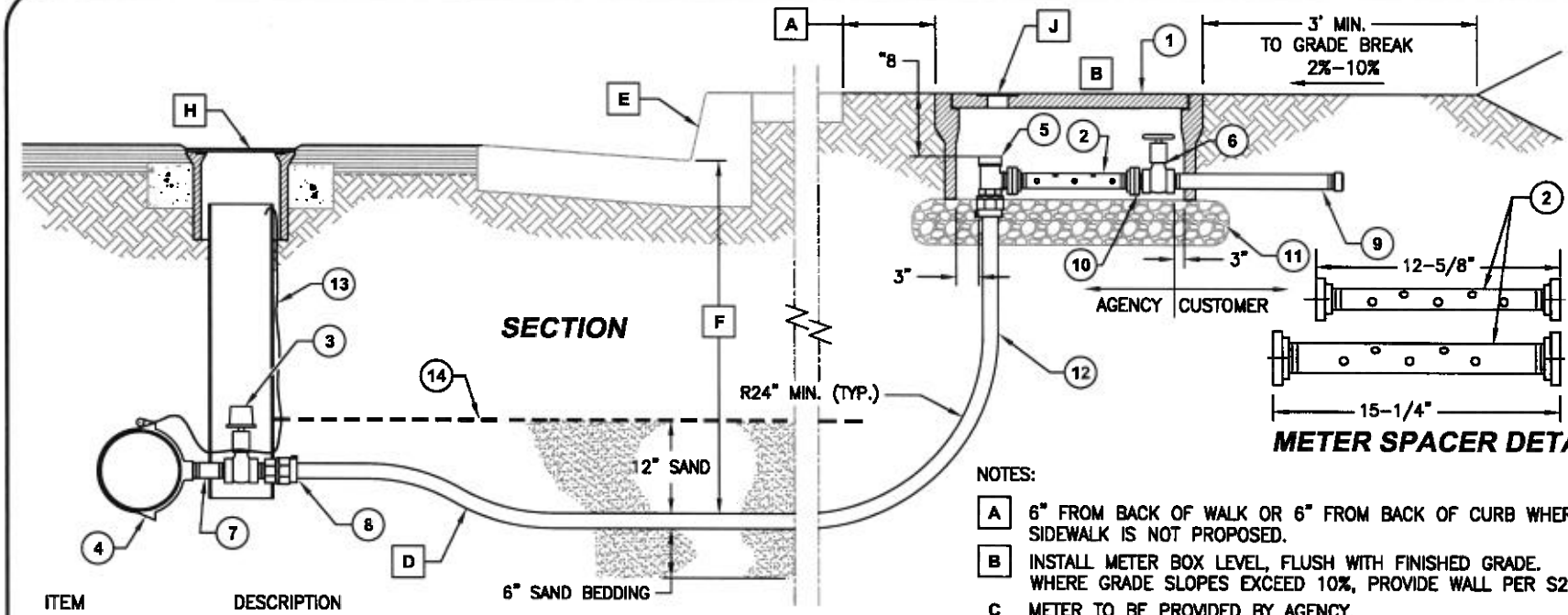

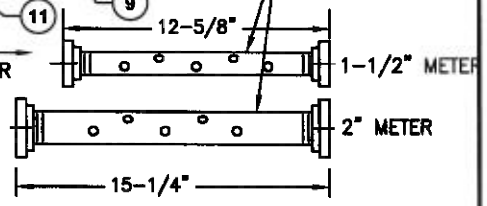

METER SPACER DETAIL

ITEM	DESCRIPTION
1	METER BOX SHALL HAVE A MIN. OF 17"x36" INTERIOR DIMENSIONS.
2	METER SPACER (SEE METER SPACER DETAIL) SCH 80 PVC NPT PIPENIPPLE WITH 5 EA. X 1/4" DIA. HOLES THROUGH BOTH SIDES, WITH METER FLANGExFIP ADAPTER EACH SIDE (SIZE PER METER)
3	2" NPT GATE VALVE W/2" SQ. OPERATING NUT
4	2" BRONZE SADDLE
5	2"x2" COMPxMETER FLANGE ANGLE METER STOP, PROVIDE 2"x1–1/2" FLG x FLG ADAPTER FOR 1–1/2" METER
6	NPT GATE VALVE (SIZE PER METER)
7	2"x6" NPT BRASS NIPPLE
8	2" MIPxCOMP COUPLING
9	24" NPT BRASS SERVICE TAIL AND CAP (SIZE PER METER)
10	METER FLANGExMIP ADAPTER (SIZE PER METER)
11	6" OF 3/4" CRUSHED ROCK EXTENDING 6" ON ALL SIDES
12	2" TYPE "K" COPPER OR BRASS
13	LOCATING WIRE
14	12" WIDE WARNING TAPE

NOTES:

- **A** 6" FROM BACK OF WALK OR 6" FROM BACK OF CURB WHERE SIDEWALK IS NOT PROPOSED.
- **B** INSTALL METER BOX LEVEL, FLUSH WITH FINISHED GRADE. WHERE GRADE SLOPES EXCEED 10%, PROVIDE WALL PER S205.
- **C** METER TO BE PROVIDED BY AGENCY.
- **D** ADJUST DEPTH AS NECESSARY FOR 24" RADIUS INTO BOX.
- **E** MARK 2" HIGH "W" IN CURB FACE @ CENTERLINE OF SERVICE.
- **F** 30" MIN. COVER EXCEPT 24" MIN. COVER AT FLOW LINE OF GUTTER OR EP WITHOUT GUTTER.
- **G** BYPASS REQUIRED ON ALL COMMERCIAL SERVICES, SEE STD DWG S203.
- **H** VALVE BOX AND WELL INSTALLATION, SEE S106
- **I** ALL METER BOX AND LIDS FOR 1–1/2" AND 2 INCH METERS SHALL BE MADE OF "FIBRELYTE", A POLYMER CONCRETE MATERIAL.
- **J** ERT HOLE SHALL BE 1–15/16" DIA. WITH 2–1/2" x 3/16" RECESS.
- **K** ALL METER BOXES SHALL BE SET OUTSIDE OF PEDESTRIAN OR VEHICLE AREAS.

AN APPROVED PRODUCTS LIST IS LOCATED IN APPENDIX E.

STANDARD SERVICE CONNECTION METERS 1-1/2" AND 2"

PCWA

APPROVED: Brian C. Martin (d)
BRIAN C. MARTIN, P.E.
DIRECTOR OF TECHNICAL SERVICES

DRAWING NO. S202

REVISION NO. 0

DATE: 09/03/10

ITEM	DESCRIPTION
1	LOCKING VALVE BOX PER S107
2	NPT CURB STOP (SIZE PER METER)
3	NPT BRASS PIPING (SIZE PER METER)
4	NPT BRASS SERVICE TAIL, NPT CAP (SIZE PER METER OUTLET)
5	2" TYPE "K" COPPER OR BRASS
6	3/4" NPT BRASS PIPE AND 3/4" NPT BRASS OR BRONZE HOSE BIB AND CAP
7	2" x 2" x 3/4" NPT BRASS TEE

NOTES:

- A BYPASS REQUIRED FOR ALL COMMERCIAL SERVICES
- B SEE S202 FOR ADDITIONAL REQUIREMENTS
- C VALVE BOX NOT SHOWN FOR CLARITY SEE PLAN VIEW FOR LOCATION

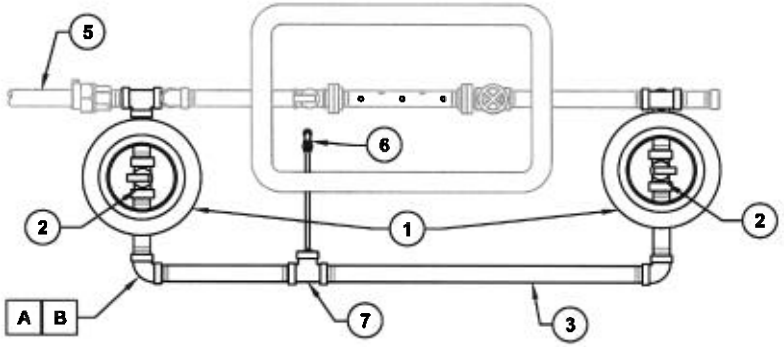

PLAN

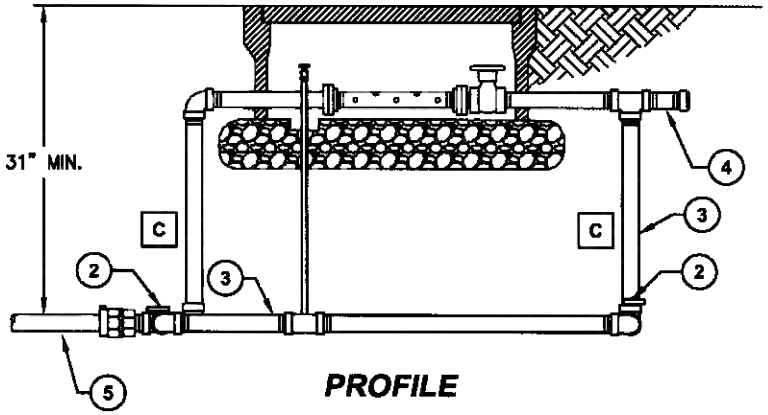

PROFILE

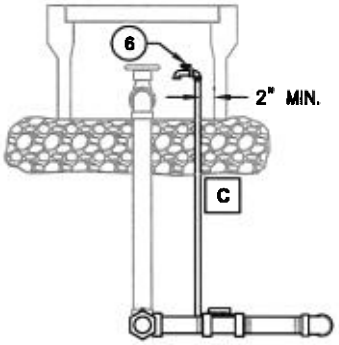

END VIEW

AN APPROVED PRODUCTS LIST IS LOCATED IN APPENDIX E.

COMMERCIAL SERVICE BYPASS FOR 1-1/2" AND 2" METERS	DRAWING NO. S203
PCWA — APPROVED: Brian C. Martin (d) BRIAN C. MARTIN, P.E. DIRECTOR OF TECHNICAL SERVICES	REVISION NO. 0
	DATE:09/03/10

ITEM	DESCRIPTION
1	4" DIP FROM MAIN
2	6" OF 3/4" CRUSHED ROCK EXTENDING 6" ON ALL SIDES
3	4" MJ 90° ELBOW
4	4"x18" FLGxPE SPOOL
5	LOCKING VALVE BOX PER S107
6	NON-LOCKING VALVE BOX SEE S106
7	SAMPLING TAP, SEE DETAIL A
8	4" FLG GATE VALVE
9	4"x3" FLG ECC. REDUCER (FOR 3" METER)
10	PROVIDE MIN. 30-1/4"x48-1/4" INSIDE DIMENSIONS PRECAST CONC. VAULT W/ALUMINUM, SPRING-ASSIST, LOCKABLE LID WITH DRAIN.
11	FLG SPOOL (SIZE PER METER)
12	4" RESTRAINED FLANGED COUPLING ADAPTER
13	N/A
14	BRONZE PLATE STRAINER (SIZE PER METER)
15	FLG SPOOL (SIZE PER METER)
16	RESTRAINED FLANGED COUPLING ADAPTER (SIZE PER METER)
17	17-1/4"x 29-1/4" MIN. INSIDE DIMENSIONS PRECAST CONC. VAULT W/ALUMINUM, SPRING-ASSIST, LOCKABLE LID WITH DRAIN.
18	3/4" BRASS OR BRONZE HOSE BIB AND CAP
19	3/4" NPT BRASS PIPING
20	4" COMPANION FLG WITH 3/4" NPT OUTLET
21	LOCATING WIRE PER S109
22	4" PE SPOOL
23	METER BYPASS
24	4" FLG TEE

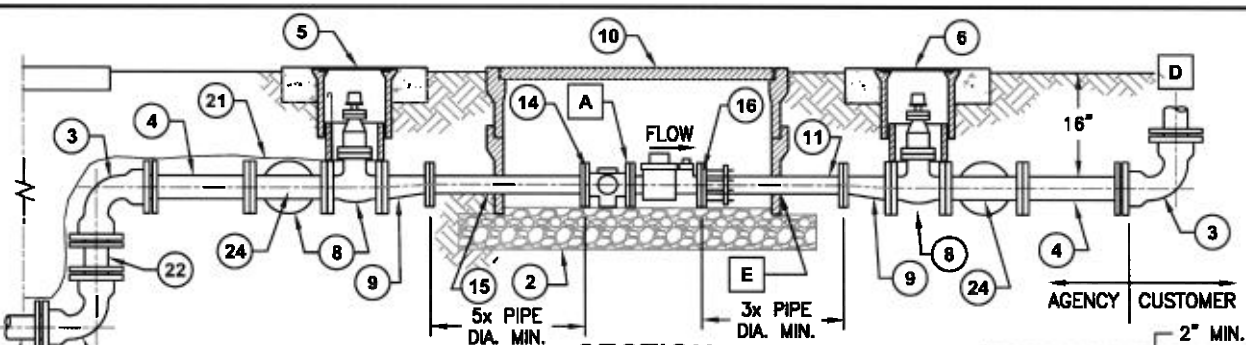

SECTION

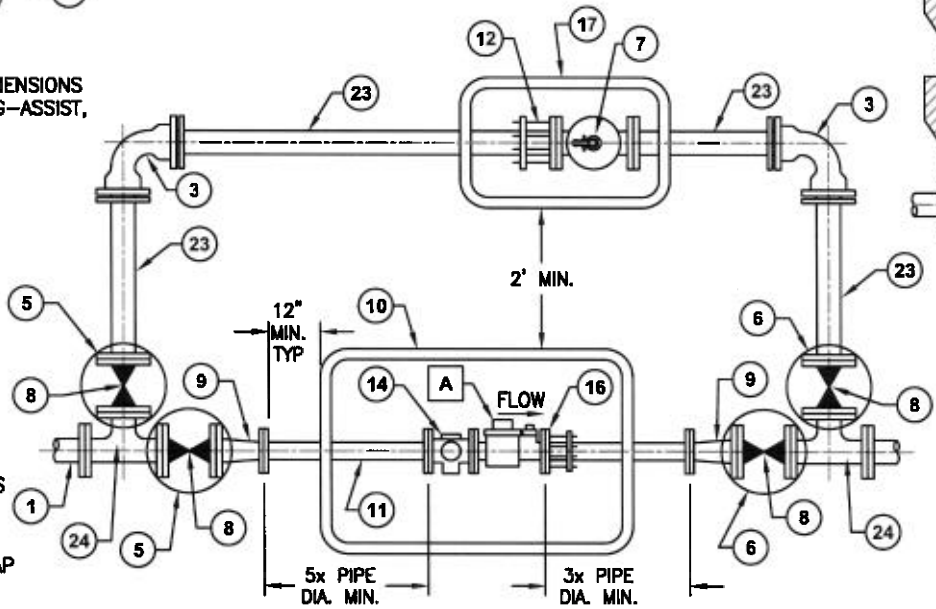

PLAN

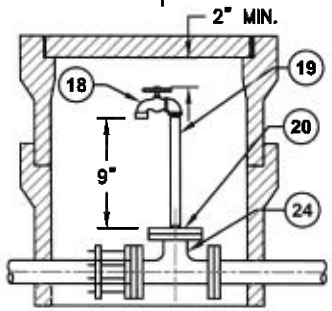

DETAIL A

NOTES:

- A — AGENCY TO SUPPLY AND INSTALL METER AND STRAINER.
- B — RESTRAIN ALL JOINTS.
- C — 3" METER CONFIGURATION SHOWN.
- D — TO BACKFLOW DEVICE
- E — NOTCH BOX FOR PIPE AS NECESSARY, TYP.

AN APPROVED PRODUCTS LIST IS LOCATED IN APPENDIX E.

STANDARD SERVICE CONNECTION 3" - 4" METER

PCWA

APPROVED: Brian C. Martin (d)
BRIAN C. MARTIN, P.E.
DIRECTOR OF TECHNICAL SERVICES

DRAWING NO. S204

REVISION NO. 0

DATE: 09/03/10

BOX ABOVE EXISTING GRADE

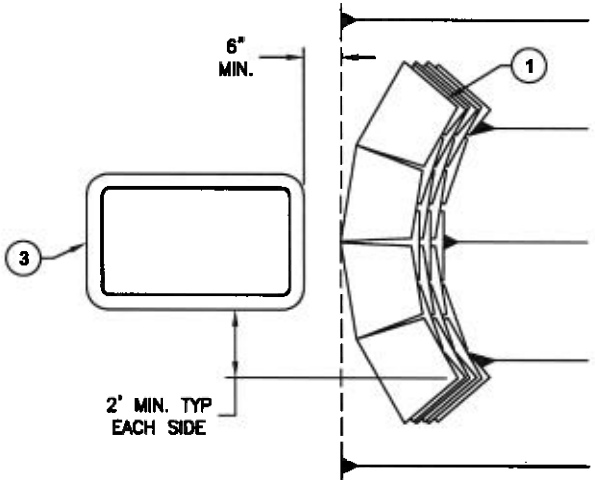

BOX BELOW EXISTING GRADE

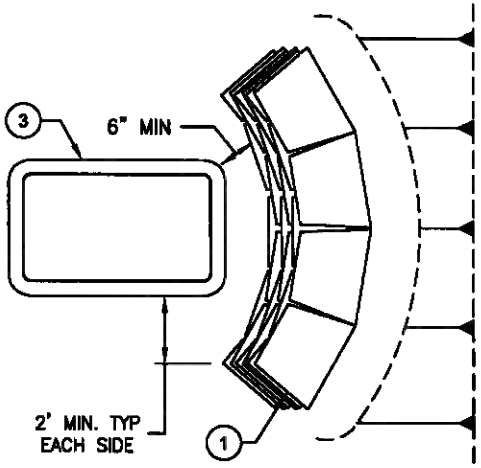

ITEM	DESCRIPTION
1	KEYED MASONRY BLOCK RETAINING WALL
2	3/4" CRUSHED ROCK
3	METER BOX AND LID

NOTES:

A BLOCK WALL CONSTRUCTION PER LATEST ADDITION OF UBC AND/OR THE BLOCK MANUFACTURER'S SPECS.

B SEE S201 FOR METER BOX INSTALLATION.

PLAN

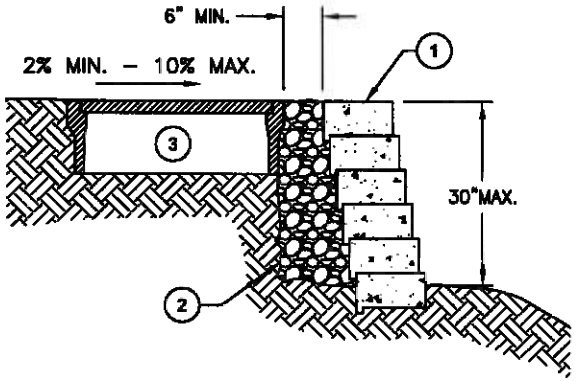

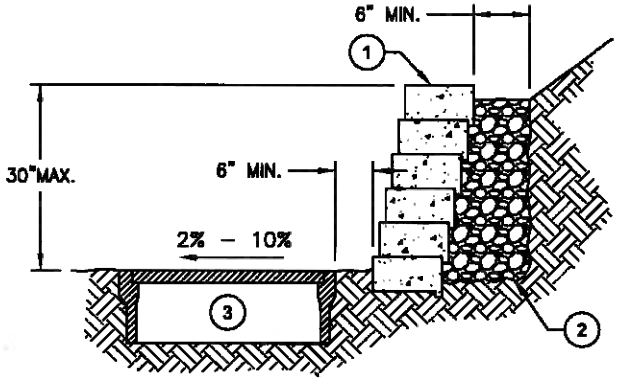

SECTION

AN APPROVED PRODUCTS LIST IS LOCATED IN APPENDIX E.

METER PROTECTION WALL

PCWA

APPROVED: Brian C. Martin (d)
BRIAN C. MARTIN, P.E.
DIRECTOR OF TECHNICAL SERVICES

DRAWING NO. S205

REVISION NO. 0

DATE: 09/03/10

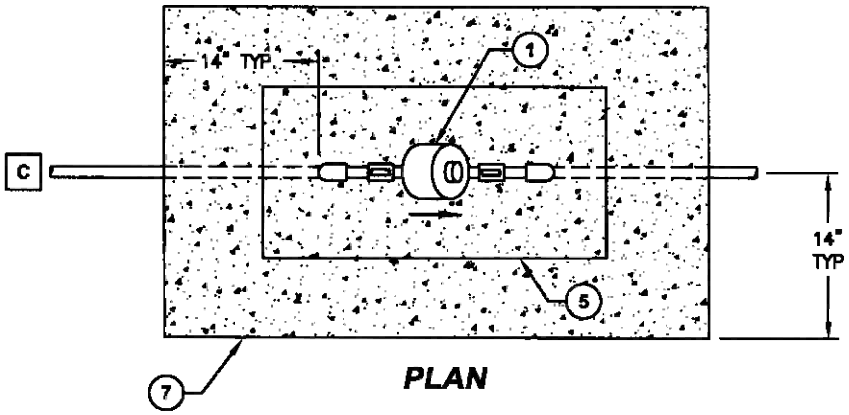

PLAN

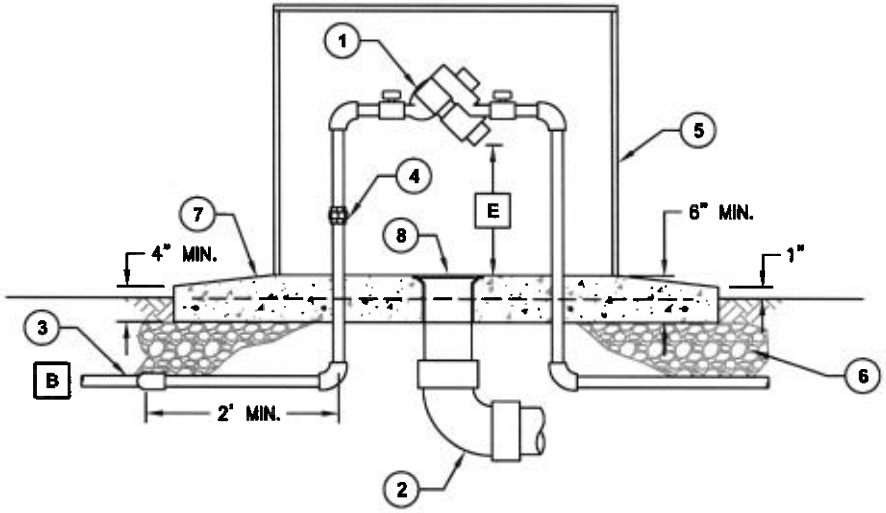

SECTION

ITEM	DESCRIPTION
1	BACKFLOW PREVENTION ASSEMBLY INSTALLED PER MANUFACTURER RECOMMENDATIONS
2	PVC DRAIN REQUIRED WHEN VALVES ARE ENCLOSED. SIZE DRAINS PER TABLE BELOW. RUN DRAINS TO STORM DRAIN OR DAYLIGHT TO DRAINAGE DITCH
3	TYPE "M" NPT COPPER, BRASS OR BRONZE FROM METER
4	BRASS OR BRONZE UNION SIZED PER INLET PIPING
5	HEATED METAL ABOVEGROUND ENCLOSURE RECOMMENDED IN AREAS SUBJECT TO FREEZING OR AS NECESSARY TO PROTECT VALVE ASSEMBLY. ALL BACKFLOW PREVENTION DEVICES SHALL BE PROTECTED BY LOCKING INSULATING BAGS AT A MINIMUM. ENCLOSURE SHALL MAINTAIN VALVE AND APPURTENANCES AT 45°F MIN.
6	6" OF 3/4" CRUSHED ROCK EXTENDING 6" ON ALL SIDES
7	6" CONC. PAD W/#4 REBAR 12" OC EW AND BROOM FINISH. SLOPE AWAY FROM BOX AT 2%
8	SLOTTED DRAIN INLET

DRAIN SIZE TABLE	
REDUCED-PRESSURE DEVICE SIZE	MIN. DRAIN SIZE
3/4" – 1-1/4"	4"
1-1/2" – 2"	6"
2-1/2"	8"
OTHER BACKFLOW PREVENTION DEVICES	MIN. DRAIN SIZE
3/4" – 2-1/2"	3"

NOTES:

A ALL PIPE AND APPURTENANCES DOWNSTREAM OF METER BOX BELONG TO CUSTOMER.

B ADD BACKFLOW PREVENTION DEVICES FOR ADDITIONAL CONNECTIONS.

C CONNECT TO SERVICE TAIL FROM METER.

D FOR MULTIPLE BACKFLOW DEVICES, MINIMUM SEPARATION OF 4 FT.

E FOR ADDITIONAL REQUIREMENTS, SEE "PCWA STANDARDS" VOL. 1–DISTRIBUTION AND CONVEYANCE, DIV. 2–IMPROVEMENT STANDARDS, SECT. 3–CROSS CONNECTION CONTROL, BACKFLOW PREVENTION DEVICES (RP).

AN APPROVED PRODUCTS LIST IS LOCATED IN APPENDIX E.

2-1/2" AND SMALLER METERED BACKFLOW PREVENTION DEVICE

DRAWING NO. S206

REVISION NO. 0

DATE: 09/03/10

PCWA

APPROVED: Brian C. Martin (d)

BRIAN C. MARTIN, P.E.
DIRECTOR OF TECHNICAL SERVICES

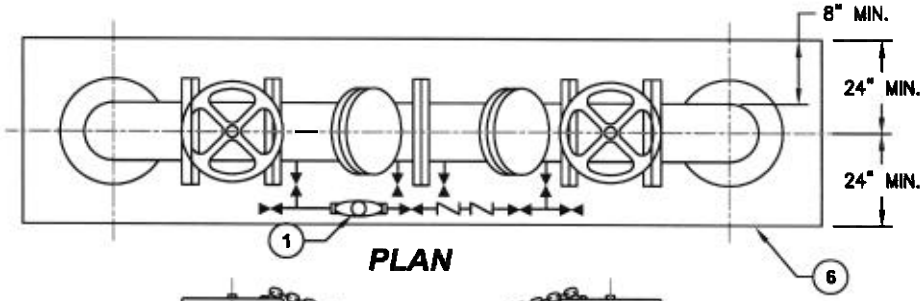

PLAN

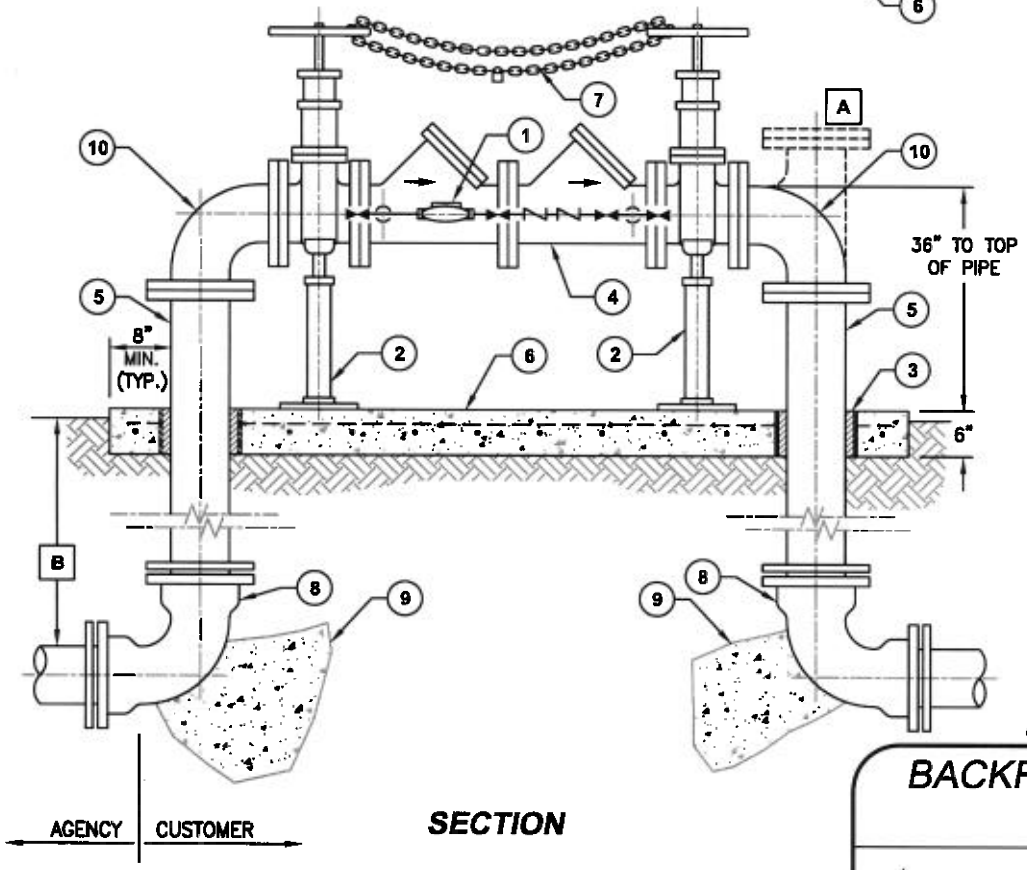

SECTION

ITEM	DESCRIPTION
1	3/4"x5/8" DETECTOR METER SUPPLIED AND MAINTAINED BY PCWA.
2	ADJUSTABLE PIPE SADDLE SUPPORTS W/BASE PLATE.
3	STEEL PIPE SLEEVE WITH JOINT SEALANT OR PACKING MATERIAL (TYP)
4	BACKFLOW PREVENTION ASSEMBLY INSTALLED PER MANUFACTURER'S RECOMENDATIONS.
5	6"–16" DIP (SIZE PER DEVICE)
6	CONC. PAD W/#4 REBAR @12" OC EW AND BROOM FINISH.
7	5/0 SS WELDED CHAIN WITH AGENCY SUPPLIED LOCK
8	MJ 90° ELBOW (TYP.)
9	CONCRETE THRUST BLOCK AREA PER S111
10	FLG x FLG 90° ELBOW

NOTES:

- A — TEE MAY BE INSTALLED FOR PIPING TO FIRE DEPT. CONNECTIONS AS NEEDED
- B — 30" MINIMUM
- C — ALL JOINTS SHALL BE RESTRAINED

AN APPROVED PRODUCTS LIST IS LOCATED IN APPENDIX E.

BACKFLOW PREVENTION DEVICE 3" AND LARGER

PCWA

APPROVED: Brian C. Martin (d)
BRIAN C. MARTIN, P.E.
DIRECTOR OF TECHNICAL SERVICES

DRAWING NO. S207

REVISION NO. 0

DATE: 09/03/10

ITEM	DESCRIPTION
1	FIRE HYDRANT AS REQUIRED BY FIRE DISTRICT AND AGENCY.
2	1-#4 REBAR IN 2' SQUARE WITH 1' OVERLAP, OR 4"x4" #10x#10 WELDED WIRE FABRIC CUT TO FIT
3	BREAKOFF BOLTS W/NUTS ON BOTTOM
4	6" CONCRETE SPLASH PAD
5	6" FLGxMJ ADAPTER
6	CONCRETE THRUST BLOCK W/4.0 S.F. BEARING AREA
7	BREAKOFF SPOOL
8	12" WIDE WARNING TAPE
9	6" MJ HYDRANT BURY ELL
10	6" PExPE DIP SPOOL
11	6" FLG GATE VALVE
12	LOCATING WIRE PER S109
13	WATER MAIN
14	VALVE WELL AND BOX PER S106

NOTES:

- **A** IF GOVERNING AGENCY DOES NOT ALLOW SPLASH PAD AT FINISH GRADE, PLACE SPLASH PAD 8" BELOW FINISH GRADE.
- **B** SLOPE CONC. PAD 2% AWAY FROM HYDRANT.
- **C** TWO 2-1/2" OUTLETS.
- **D** ONE 4-1/2" OUTLET TO FACE THE STREET.
- **E** 30" MIN. COVER EXCEPT 24" MIN. COVER AT FLOW LINE OF GUTTER OR EP WITHOUT GUTTER.
- **F** PROVIDE 8' MIN. RESTRAINED PIPE LENGTH OF WATER MAIN EACH SIDE OF TEE. RESTRAIN ENTIRE LENGTH OF BLOW-OFF ASSEMBLY.

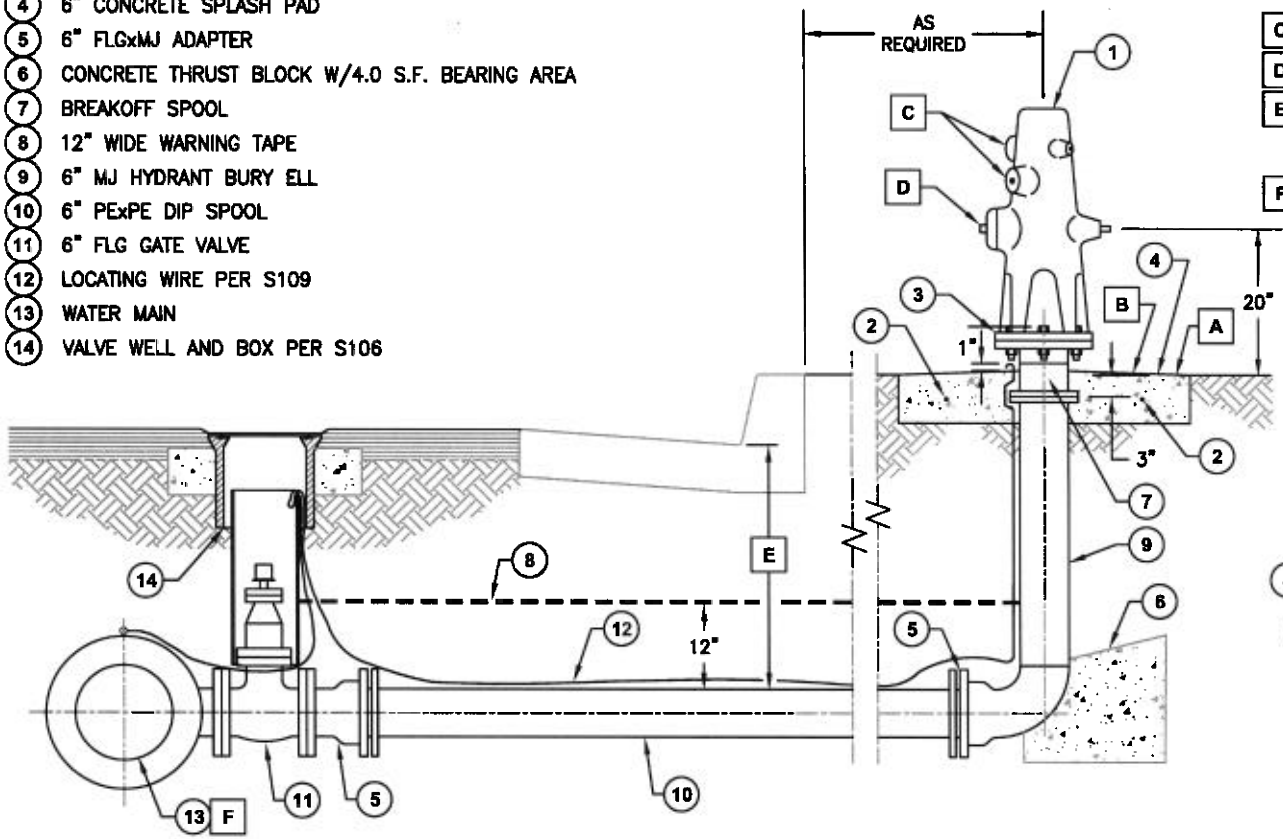

SECTION

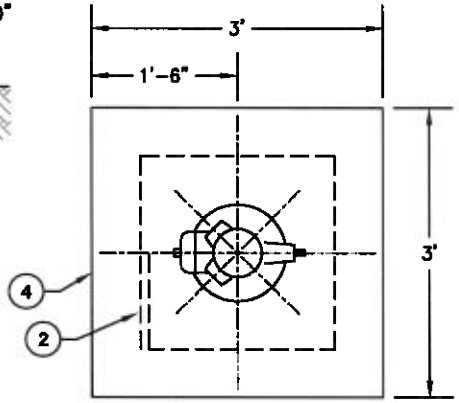

PLAN

AN APPROVED PRODUCTS LIST IS LOCATED IN APPENDIX E.

FIRE HYDRANT/6" BLOW-OFF ASSEMBLY (WET BARREL)		DRAWING NO. *S210*
PCWA	APPROVED: Brian C. Martin (d) BRIAN C. MARTIN, P.E. DIRECTOR OF TECHNICAL SERVICES	REVISION NO. *0* DATE: 09/03/10

ITEM	DESCRIPTION
1	COMBINATION AVRV. SEE TECHNICAL SPECIFICATIONS FOR SIZING.
2	AIR VENT ENCLOSURE
3	NPT PVC COUPLING
4	SWING JOINT (2-90° FITTINGS)
5	BRASS NIPPLE SIZE PER AVRV OUTLET
6	PROVIDE BRASS CORPORATION STOP VALVE TO MATCH AVRV INLET. ADD A 2" NPT BRASS GATE VALVE AND VALVE BOX FOR 2" AVRV INLET.
7	GATE VALVE ACCESSIBLE WITHIN BOX
8	SERVICE SADDLE W/BUSHING AS NECESSARY. SEE SPECIFICATIONS FOR SADDLE MATERIALS
9	6" OF 3/4" CRUSHED ROCK EXTENDING 6" ON ALL SIDES
10	1-5/8"X1-5/8" GALV. STEEL CHANNEL (UNISTRUT OR EQUAL) ON NARROW SIDE OF VALVE BODY. DRIVE MIN. 18" INTO SOIL BELOW CRUSHED ROCK. SECURE TO VALVE BODY W/1" MIN. WIDTH SS STRAP
11	NPT MUSHROOM VENT CAP W/SS SCREEN, BOTTOM VENTING (SIZED PER AVRV OUTLET)
12	NPT SCH 80 PVC PIPE (SIZE PER AVRV OUTLET)
13	12" WIDE WARNING TAPE
14	LOCATING WIRE PER S109
15	BOX SHALL BE MIN. 17-1/4"x 30-1/4" INTERIOR, BOX AND LID. WELD 3" HIGH "AVRV" ON LID SURFACE
16	VALVE WELL AND BOX PER S106

NOTES:

- A WHERE POSSIBLE, PLACE AVRV'S WITHIN 10 FEET OF PROPERTY CORNERS.
- B ALL PIPES AND FITTINGS TO BE BRASS OR BRONZE UNLESS OTHERWISE SHOWN.
- C 30" MIN. COVER EXCEPT 24" MIN. COVER AT FLOW LINE OF GUTTER OR EP WITHOUT GUTTER.
- D PLACE AVRV IN BOX SO IT MAY BE REMOVED WITHOUT REMOVING THE BOX.
- E 6" FROM BACK OF WALK OR 6" FROM BACK OF CURB WHERE SIDEWALK IS NOT PROPOSED.
- F ALL HORIZONTAL PIPE SHALL SLOPE DOWN TOWARD MAIN AT 1% SLOPE MIN.

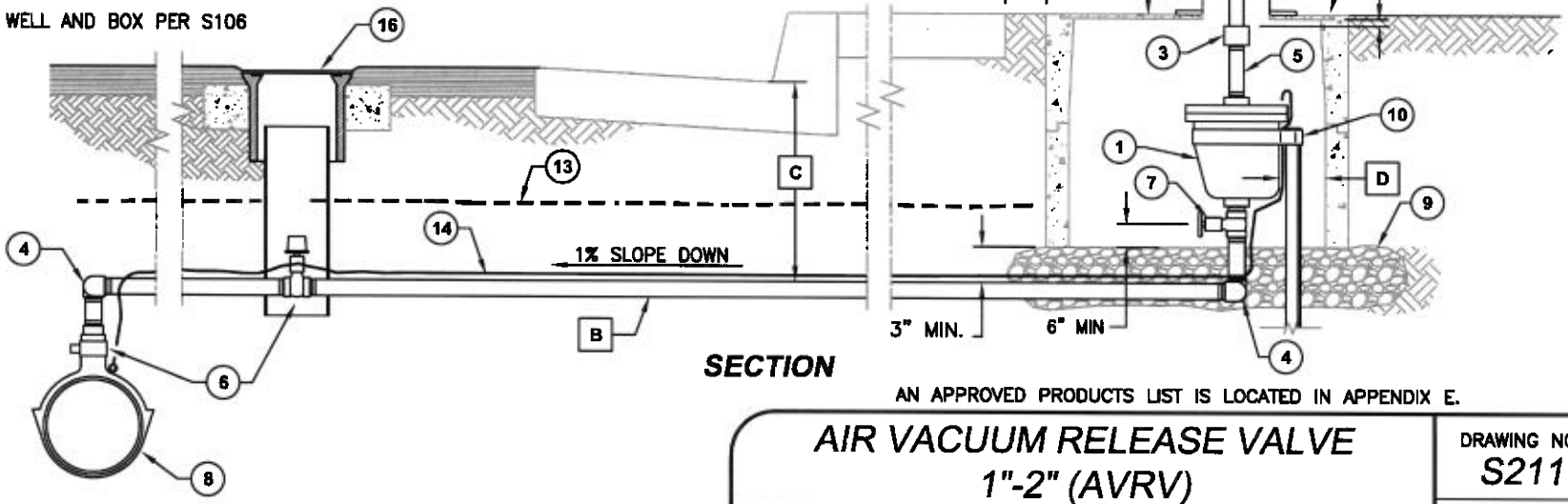

SECTION

AN APPROVED PRODUCTS LIST IS LOCATED IN APPENDIX E.

AIR VACUUM RELEASE VALVE 1"-2" (AVRV)

PCWA

APPROVED: Brian C. Martin (d)
BRIAN C. MARTIN, P.E.
DIRECTOR OF TECHNICAL SERVICES

DRAWING NO. S211

REVISION NO. 0

DATE: 09/03/10

ITEM	DESCRIPTION
1	FLG PRESSURE RELIEF VALVE (PRESSURE CLASS 400) SIZED PER TABLE AT RIGHT, W/MICROSWITCH ON/OFF INDICATOR
2	FLG GATE VALVE W/HANDWHEEL SIZE PER PRESSURE RELIEF VALVE
3	D.I.P. FLG TEE, PRV STATION PIPE SIZE x PRESSURE RELIEF VALVE SIZE
4	12" PVC DRAIN BASIN W/4" OUTLETS, HINGED, SLOTTED GRATE (PLUG ONE BRANCH AS NECESSARY).
5	4" SDR-35 PVC DRAIN, SLOPE TO DRAIN TO STORM DRAIN OR DITCH
6	36"x36"x6" THICK CONCRETE PAD W/#4 REBAR 12" OC EW
7	DOWNSTREAM LEG OF PRV STATION SEE S213
8	6" OF 3/4" CRUSHED ROCK EXTENDING 6" ON ALL SIDES
9	STEEL PIPE SLEEVE WITH SEALANT OR JOINT PACKING

NOTES:

A THIS CONFIGURATION CAN BE APPLIED TO ANY ABOVE GROUND PIPING WITH THE AGENCY'S APPROVAL.

B CENTER DRAIN UNDER PRESSURE RELIEF VALVE

C SEE S213 SAFE-T-COVER

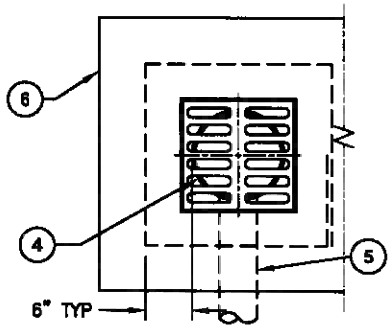

DRAIN PLAN

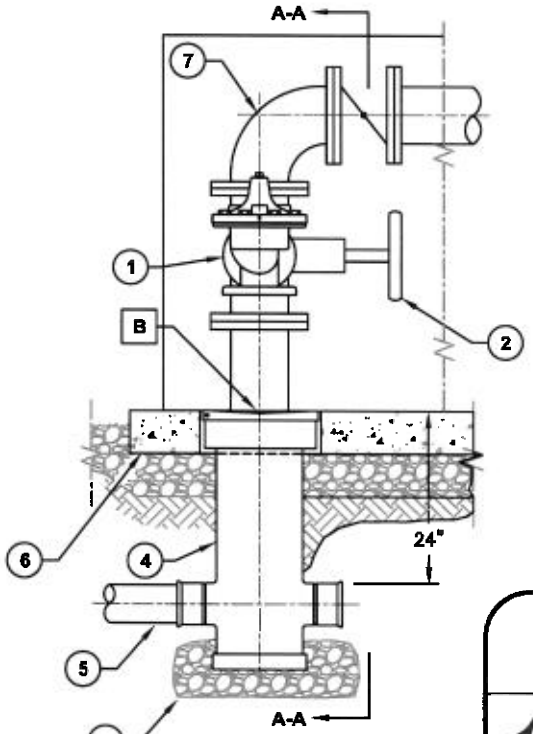

SECTION

P. REDUCING VALVE SIZE (IN.)	P. RELIEF VALVE SIZE (IN.)
6	2
8	3
12	4

PRESSURE RELIEF VALVE SIZING TABLE

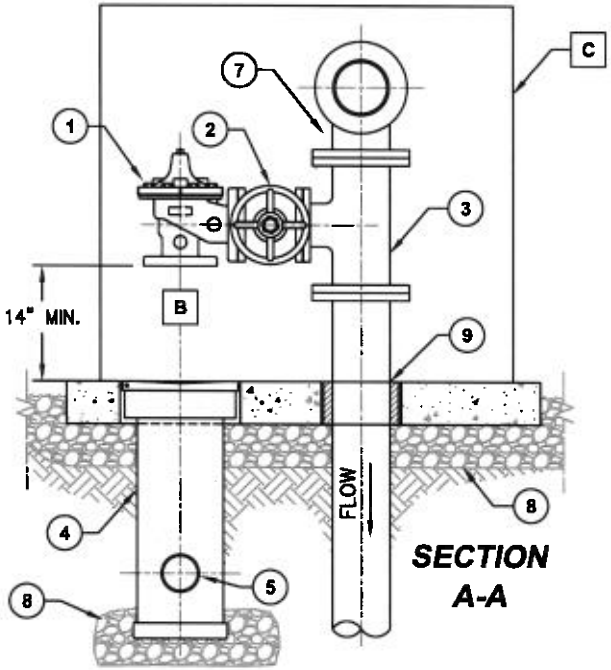

SECTION A-A

AN APPROVED PRODUCTS LIST IS LOCATED IN APPENDIX E.

PRESSURE RELIEF VALVE ASSEMBLY

PCWA

APPROVED: Brian C. Martin (d)
BRIAN C. MARTIN, P.E.
DIRECTOR OF TECHNICAL SERVICES

DRAWING NO. S212

REVISION NO. 0

DATE: 09/03/10

ITEM	DESCRIPTION
1	VALVE (SIZE PER WATERLINE)
2	LEVER-OPERATED FLG ISOLATION VALVE W/LOCKING HANDLE
3	SAFE-T-COVER OR EQUAL IN DESERT SAND COLOR, SIZED FOR VALVE CONFIGURATION
4	6" CONC. SLAB W/4"x4" #10x#10 WELDED WIRE MESH AT MID DEPTH
5	FLG METERING PRESSURE REDUCING VALVE
6	TELEMETRY STATION
7	MJxFLG TEE (6" BRANCH)
8	(2) 1/2" PVC-COATED STEEL CONDUITS
9	MJ ELBOW
10	FLG ECC. REDUCER
11	FLGxFLG TEE
12	MJxFLG TEE
13	PERMANENT GUARD POST (PER S402)
14	REMOVABLE GUARD POST (PER S402)
15	FLG ELBOW
16	FLGxMJ ADAPTER
17	FIRE HYDRANT ASSEMBLY, SEE S210
18	DIP SPOOL
19	NORMALLY CLOSED MAIN VALVE
20	MJxFLG 90°
21	MJxMJ 90°

NOTES

- **A** ASPHALT CONC. SHALL BE PLACED A MIN. OF 5 FT. AROUND CONC. SLAB.
- **B** GRADE AROUND PRV STATION FOR SITE DRAINAGE, TRUCK ACCESS AND OFF-STREET PARKING. PAVE WITH 2" A.C. OVER 6" A.B. MIN.
- **C** ALL BOLTS AND NUTS SHALL BE STAINLESS STEEL.
- **D** RESTRAIN ALL JOINTS, FLANGE ALL ABOVE-GROUND CONNECTIONS.
- **E** POWER & TELEMETRY REQUIREMENTS TO BE PROVIDED BY AGENCY.
- **F** CONC. SLAB TO EXTEND 4" BEYOND SAFE-T-COVER ON ALL SIDES. A.C. SHALL MATCH FINISHED GRADE OF CONC. SLAB.
- **G** SAFE-T-COVER ENCLOSURE TO BE CONTINUOUSLY SEALED ON THE INSIDE WHERE IT MEETS THE CONC. SLAB W/25-YEAR SILICONE SEALANT EXCEPT AT DOOR LOCATIONS.
- **H** SAFE-T-COVER ENCLOSURE SHALL BE ANCHORED TO CONC. SLAB USING MANF. SUPPLIED HARDWARE AND FOLLOWING MANF. INSTRUCTIONS.
- **I** WHERE PARALLEL PRV VALVES ARE REQUIRED, A BUILDING IS REQUIRED. MIN. SEPARATION BETWEEN PARALLEL VALVES SHALL BE 6 FT.
- **J** BYPASS REQUIRED IN ALL PRV STATION INSTALLATIONS.
- **K** LIMITS OF ASPHALT (AC NOT SHOWN FOR CLARITY).
- **L** IF SITE REQUIRES A BUILDING OVER VALVE STRUCTURES, BUILDING SHALL BE DESIGNED PER SITE AND SHALL INCLUDE A SINGLE 36" DOOR AND A GLASS BLOCK WINDOW OR SKYLIGHT.
- **M** IN COLD CLIMATE APPLICATION AREAS, THE PRV ENCLOSURE SHALL BE INSULATED AND HEATED.

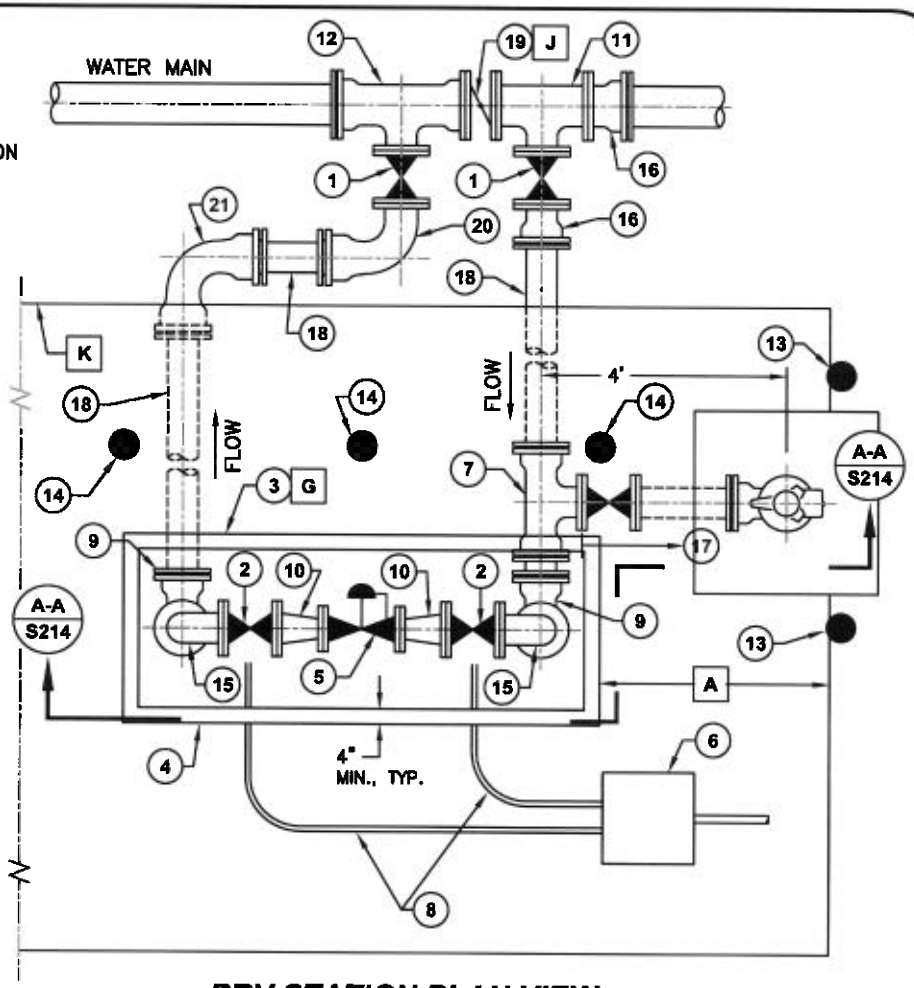

PRV STATION PLAN VIEW

AN APPROVED PRODUCTS LIST IS LOCATED IN APPENDIX E.

PRESSURE REDUCING STATION PLAN		DRAWING NO. S213
PCWA	APPROVED: Brian C. Martin (d) BRIAN C. MARTIN, P.E. DIRECTOR OF TECHNICAL SERVICES	REVISION NO. 0 DATE: 09/03/10

ITEM	DESCRIPTION
1	LEVER-OPERATED FLG ISOLATION VALVE W/LOCKING HANDLE
2	SAFE-T-COVER OR EQUAL IN DESERT SAND COLOR, SIZED FOR VALVE CONFIGURATION
3	MJ ELBOW
4	FLG METERING PRESSURE REDUCING VALVE
5	FINISHED GRADE
6	6" CONC. SLAB W/4x4-W1.4xW1.4 WELDED WIRE MESH AT MID DEPTH
7	FLG ECC. REDUCER, STRAIGHT SIDE UP
8	FLG 90° ELBOW
9	FLGxPE DIP SPOOL
10	FIRE HYDRANT ASSEMBLY, SEE S210
11	1/2" NPT PRESSURE GAUGE
12	1" NPT BRASS BALL VALVE
13	1" BRONZE SADDLE
14	GAGE PRESSURE TRANSMITTER W/L.C.D. READOUT (L.E.D. IN COLD CLIMATE AREA), 1/2" NPT CONNECTIONS
15	1" NPT BRASS CLOSE NIPPLE
16	1"x1/2" NPT BRASS BUSHING
17	1/2" NPT BRASS CLOSE NIPPLE
18	1"x1/2" NPT BRASS CROSS
19	1/2"x2" NPT BRASS NIPPLE
20	1/2" NPT BRASS HOSE BIB
21	1/2" PVC-COATED STEEL CONDUITS
22	6" CLASS 2 AGG. BASE
23	2" ASPHALT CONCRETE

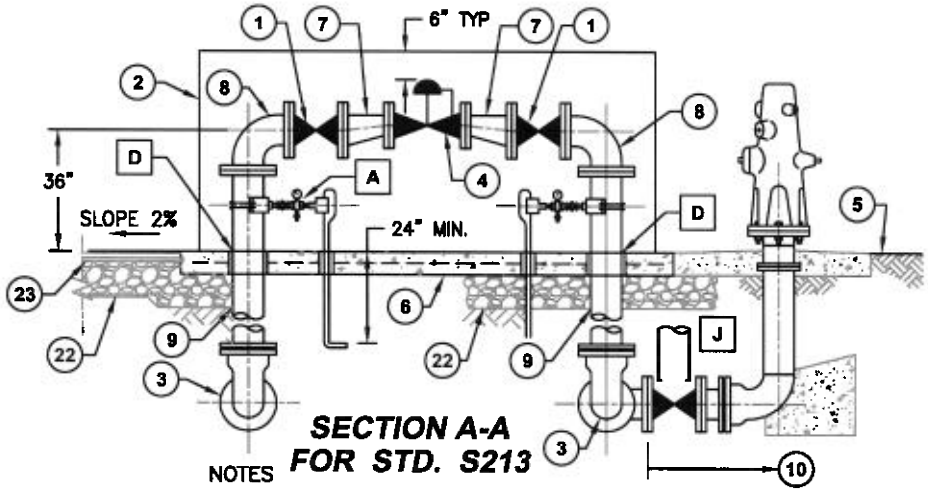

SECTION A-A FOR STD. S213

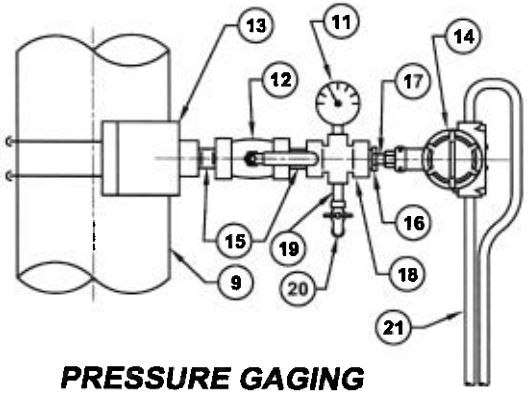

PRESSURE GAGING ASSEMBLY

NOTES

- [A] PRESSURE GAGING ASSEMBLY.
- B RESTRAIN ALL JOINTS, FLANGE ALL ABOVE-GROUND CONNECTIONS.
- C ALL BOLTS AND NUTS SHALL BE STAINLESS STEEL.
- [D] STEEL PIPE SLEEVE WITH SEALANT AND PIPE JOINT PACKING PER S405.
- E CONCRETE SLAB TO EXTEND 4" BEYOND SAFE-T-COVER ON ALL SIDES. A.C. SHALL MATCH FINISHED GRADE OF CONC. SLAB.
- F SAFE-T-COVER OR EQUAL ENCLOSURE TO BE CONTINUOUSLY SEALED ON THE INSIDE WHERE IT MEETS THE CONC. SLAB WITH 25-YEAR SILICONE SEALANT EXCEPT AT DOOR LOCATIONS.
- G SAFE-T-COVER OR EQUAL ENCLOSURE SHALL BE ANCHORED TO CONC. SLAB USING MANF. SUPPLIED HARDWARE AND FOLLOWING MANF. INSTRUCTIONS.
- H IF SITE REQUIRES A BUILDING OVER VALVE STRUCTURES, BUILDING SHALL BE DESIGNED PER SITE AND SHALL INCLUDE A 36" WIDE DOOR AND A GLASS BLOCK WINDOW OR SKYLIGHT.
- I SEE S213 FOR PRESSURE REDUCING STATION PLAN VIEW
- [J] VALVE BOX OMITTED FOR CLARITY

AN APPROVED PRODUCTS LIST IS LOCATED IN APPENDIX E.

PRESSURE REDUCING STATION SECTION A-A		DRAWING NO. S214
PCWA	APPROVED: Brian C. Martin (d) BRIAN C. MARTIN, P.E. DIRECTOR OF TECHNICAL SERVICES	REVISION NO. 0 DATE:09/03/10

ITEM	DESCRIPTION
1	18"x18"x4" CONCRETE PAD FLUSH WITH FINISH GRADE W/#4 REBAR LOOP
2	12" WIDE WARNING TAPE
3	1"x2" NPTxCOMP. BRONZE FITTING
4	GALV. STEEL ANCHOR BOLTS, SIZE PER SAMPLING STATION MANF. RECOMMENDATIONS
5	SAMPLING STATION
6	1" MIN. TYPE "K" COPPER
7	3" PVC SLEEVE FOR DRAIN
8	1 CUBIC FOOT 3/4" CRUSHED ROCK
9	DRAIN

NOTES:

A CONSTRUCT SERVICE SADDLE VALVE AND VALVE BOX PER S201.

B BACK OF SIDEWALK OR CURB.

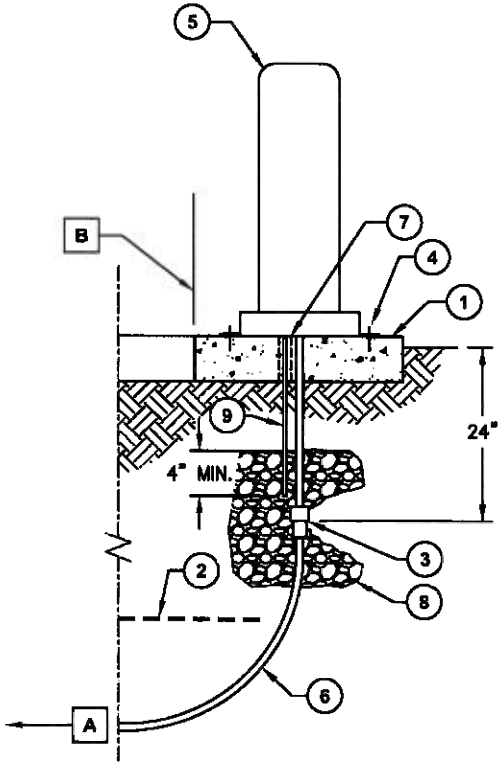

SECTION

AN APPROVED PRODUCTS LIST IS LOCATED IN APPENDIX E.

WATER QUALITY SAMPLING STATION		DRAWING NO. *S215*
PCWA	APPROVED: Brian C. Martin (d) BRIAN C. MARTIN, P.E. DIRECTOR OF TECHNICAL SERVICES	REVISION NO. *0* DATE: 09/03/10

ITEM	DESCRIPTION
1	APPROACH RAMPS BY PERMITTEE. ROADSIDE DRAINAGE SHALL BE CARRIED ACROSS CANAL IN A SAFE MANNER AND DISPOSED OF SAFELY.
2	BRIDGE BY PERMITTEE
3	HIGH WATER LEVEL AS DETERMINED BY PCWA
4	CONCRETE FOOTINGS BY PERMITTEE

NOTES:

- **A** TWO FEET MIN. FROM TOP OF BANK, OR 3 FEET MIN. FROM EDGE OF WATER AT HIGH WATER LEVEL, WHICHEVER IS GREATER.
- **B** BRIDGE SHALL HAVE A CLEAR DISTANCE OF 2 FEET MINIMUM ABOVE HIGH WATER LEVEL OR 1 FOOT MIN. ABOVE TOP OF BANK, WHICHEVER IS GREATER.
- **C** FOOTING SHALL EXTEND 1 FOOT MIN. BELOW CANAL INVERT.
- **D** THE CANAL SHALL BE RECONSTRUCTED TO THE AGENCY'S CURRENT STANDARD FOR THE PARTICULAR CANAL AFTER INSTALLATION OF THE FOOTINGS AND BEFORE PLACEMENT OF THE BRIDGE. THIS RECONSTRUCTION WORK WILL BE PERFORMED BY THE AGENCY AT THE PERMITTEE'S EXPENSE.
- **E** SPECIFICATION REFERENCE DIV. 2, SECT. 2, PAR I, ROAD & OTHER CROSSINGS
- **F** BRIDGE LOAD RATING SHALL BE DESIGNED TO MEET REQUIREMENTS OF THE CALIFORNIA FIRE CODE (LATEST ADDITION). PROOF OF APPROVAL BY ACTING FIRE DISTRICT SHALL BE SUBMITTED TO THE AGENCY.

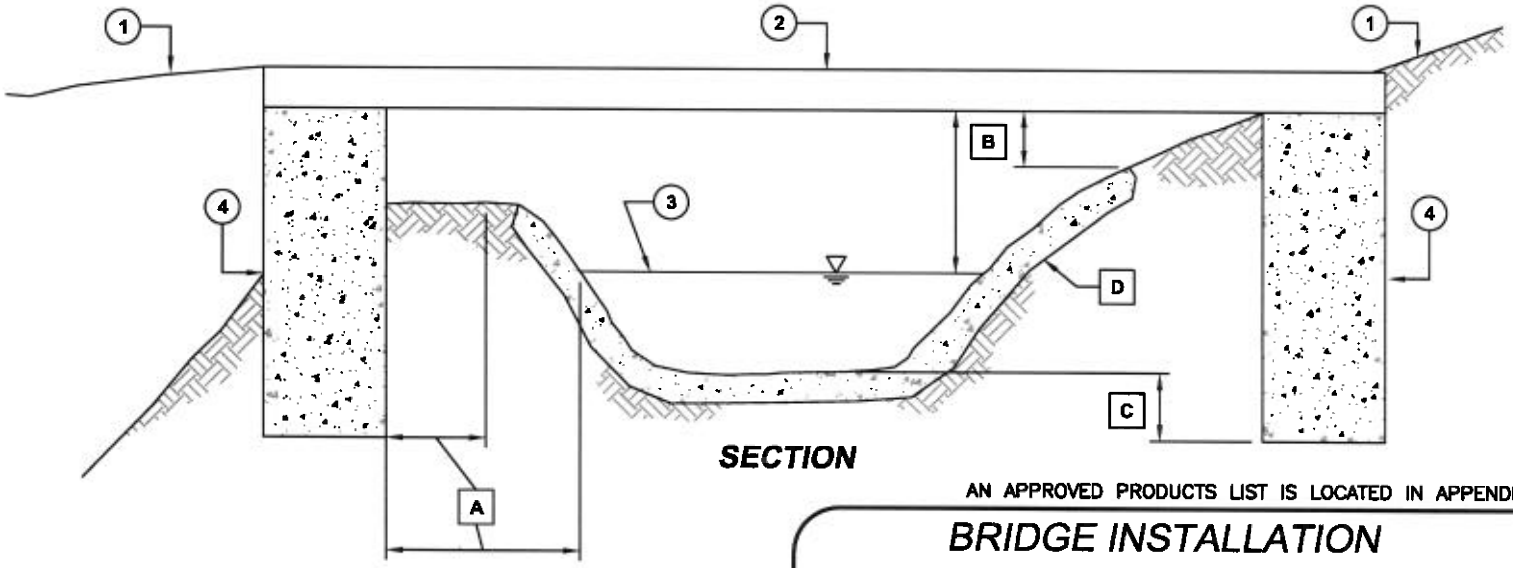

SECTION

AN APPROVED PRODUCTS LIST IS LOCATED IN APPENDIX E.

BRIDGE INSTALLATION OVER CANAL	DRAWING NO. S301
PCWA — APPROVED: Brian C. Martin (d) BRIAN C. MARTIN, P.E. DIRECTOR OF TECHNICAL SERVICES	REVISION NO. 0
	DATE: 09/03/10

ITEM	DESCRIPTION
1	RESTRAINED DUCTILE IRON PIPE. SIZE CASING PER TABLE.
2	CARRIER PIPE
3	HIGH WATER LEVEL AS DETERMINED BY PCWA

MIN. CASING SIZES	
NOM. CARRIER SIZE	MIN. NOM. CASING SIZE
≤4"	6"
6"	8"
8"	10"
12"	14"
>12"	SPECIAL DESIGN

NOTES:

A SEAL BOTH ENDS OF CASING PIPE PER S404.

B THE CANAL CROSS SECTION MUST BE RECONSTRUCTED TO ITS ORIGINAL SHAPE AFTER THE CROSSING IS INSTALLED. BACKFILL MATERIAL MUST BE SIMILAR TO THE EXCAVATED MATERIAL AND BE COMPACTED TO 95% MINIMUM RELATIVE DENSITY. THE CANAL SHALL BE GUNITE LINED 20' ON EITHER SIDE OF THE PIPELINE. GUNITE SHALL EXTEND TO THE TOP OF THE BERM.

C THE AGENCY MAY REQUIRE THE CASING PIPE TO EXTEND BEYOND THE PRESENT CANAL CROSS SECTION IF IT IS ANTICIPATED THAT THE CANAL WILL BE ENLARGED.

D CARRIER PIPE ANGLE NOT REQUIRED WHERE TERRAIN ADJACENT TO CANAL IS FLAT.

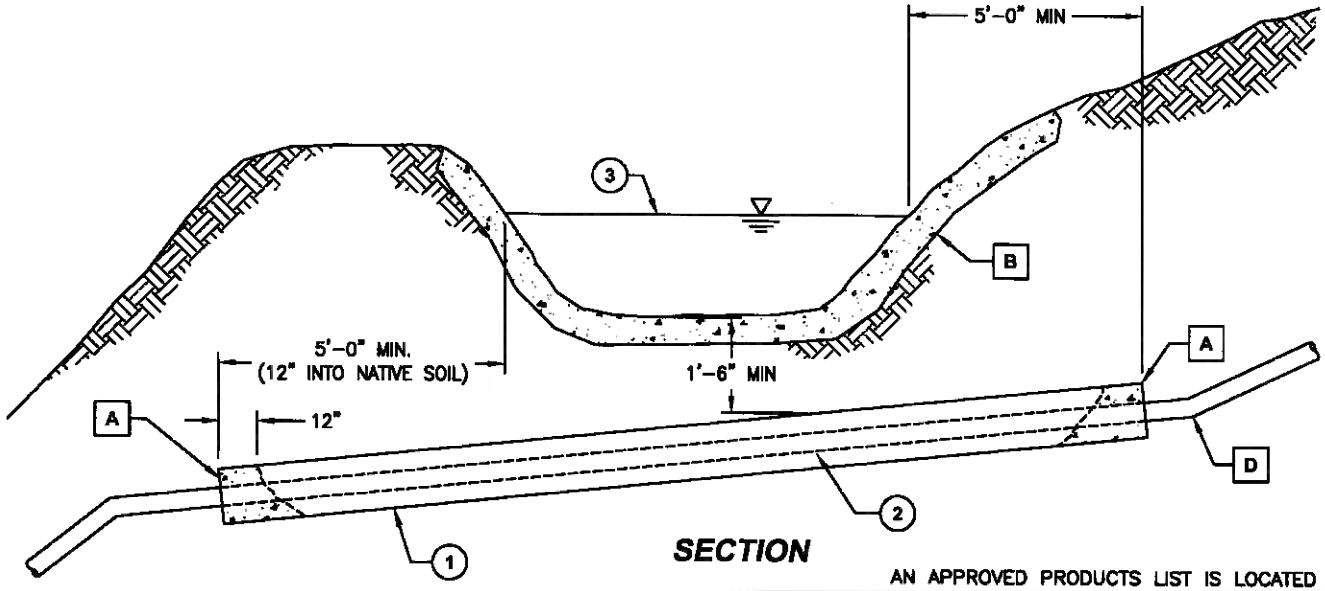

SECTION

AN APPROVED PRODUCTS LIST IS LOCATED IN APPENDIX E.

WATERLINE CROSSING UNDER CANAL

PCWA

APPROVED: Brian C. Martin (d)
BRIAN C. MARTIN, P.E.
DIRECTOR OF TECHNICAL SERVICES

DRAWING NO. S302

REVISION NO. 0

DATE: 09/03/10

ITEM	DESCRIPTION
1	RESTRAINED DUCTILE IRON PIPE. SIZE CASING PER TABLE.
2	CARRIER PIPE
3	HIGH WATER LEVEL AS DETERMINED BY PCWA

MIN. CASING SIZES	
NOM. CARRIER SIZE	MIN. NOM. CASING SIZE
≤4"	6"
6"	8"
8"	10"
12"	14"
>12"	SPECIAL DESIGN

NOTES:

A SEAL BOTH ENDS OF CASING PIPE PER S404.

B THE CANAL CROSS SECTION MUST BE RECONSTRUCTED TO ITS ORIGINAL SHAPE AFTER THE CROSSING IS INSTALLED. BACKFILL MATERIAL MUST BE SIMILAR TO THE EXCAVATED MATERIAL AND BE COMPACTED TO 95% MINIMUM RELATIVE DENSITY. THE CANAL SHALL BE GUNITE LINED 20' ON EITHER SIDE OF THE PIPELINE. GUNITE SHALL EXTEND TO THE TOP OF THE BERM.

C THE AGENCY MAY REQUIRE THE CASING PIPE TO EXTEND BEYOND THE PRESENT CANAL CROSS SECTION IF IT IS ANTICIPATED THAT THE CANAL WILL BE ENLARGED.

D MUST BE LONGER THAN EQUIPMENT TRAVEL WAY ON BERM.

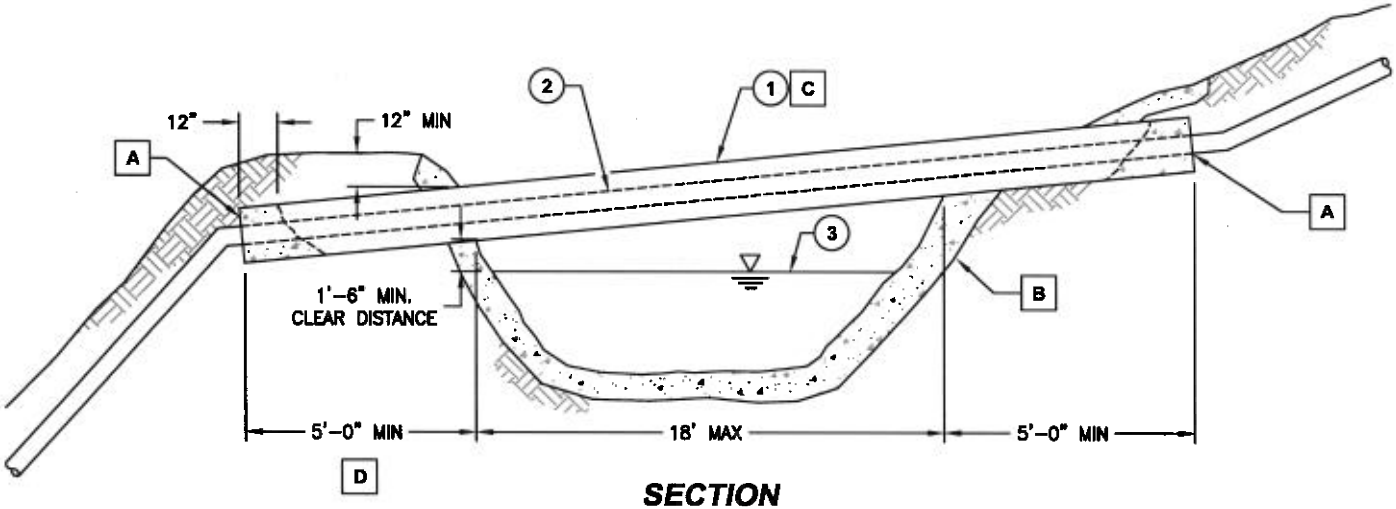

SECTION

AN APPROVED PRODUCTS LIST IS LOCATED IN APPENDIX E.

WATERLINE CROSSING OVER CANAL

PCWA

APPROVED: Brian C. Martin (d)
BRIAN C. MARTIN, P.E.
DIRECTOR OF TECHNICAL SERVICES

DRAWING NO. S303

REVISION NO. 0

DATE: 09/03/10

ITEM	DESCRIPTION
1	1" GALVANIZED STEEL VENT PIPE W/180° RETURN ELBOW AND SCREENED CAP
2	1-1/2" GALVANIZED STEEL OR SCH 80 PVC DRAIN PIPE AND SCREEN CAP
3	RESTRAINED DUCTILE IRON PIPE. SIZE CASING PER TABLE
4	SEWER PIPE
5	SS MESH SCREEN CAP TO MATCH PIPE SIZE, MAX SCREEN OPENING 1/8"
6	TOE OF BERM
7	HIGH WATER LEVEL AS DETERMINED BY PCWA

MIN. CASING SIZES	
NOM. CARRIER SIZE	MIN. NOM. CASING SIZE
≤4"	6"
6"	8"
8"	10"
12"	14"
>12"	SPECIAL DESIGN

NOTES:

A. SEAL BOTH ENDS OF CASING PIPE PER S404.

B. THE CANAL CROSS SECTION MUST BE RECONSTRUCTED TO ITS ORIGINAL SHAPE AFTER THE CROSSING IS INSTALLED. BACKFILL MATERIAL MUST BE SIMILAR TO THE EXCAVATED MATERIAL AND BE COMPACTED TO 95% MAXIMUM DRY DENSITY. THE CANAL SHALL BE GUNITE LINED 20' ON EITHER SIDE OF THE PIPELINE. GUNITE SHALL EXTEND TO THE TOP OF THE BERM. GUNITE PER DIV. 3, SEC. 9.

C. THE AGENCY MAY REQUIRE THE CASING PIPE TO EXTEND BEYOND THE PRESENT CANAL CROSS SECTION IF IT IS ANTICIPATED THAT THE CANAL WILL BE ENLARGED.

D. ADD CARSONITE MARKER POST 4 FT. ABOVE GRADE, LABEL SEWER CROSSINGS.

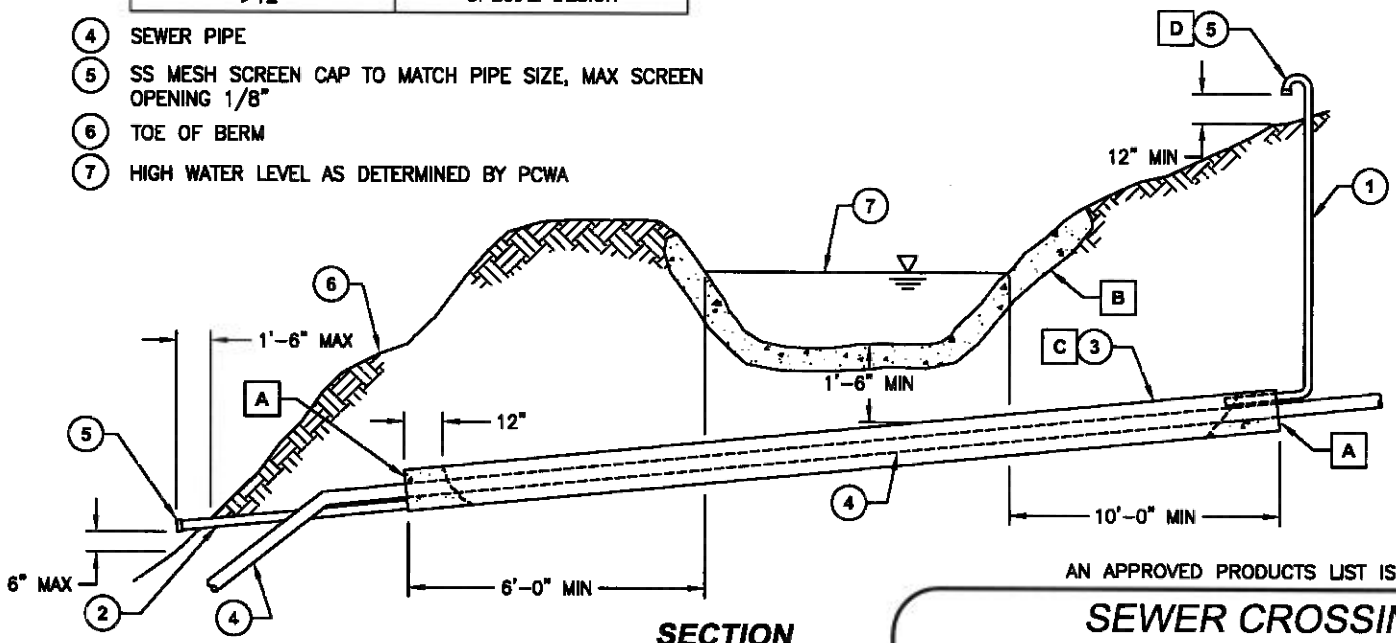

SECTION

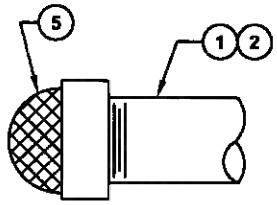

SCREEN CAP

AN APPROVED PRODUCTS LIST IS LOCATED IN APPENDIX E.

SEWER CROSSING UNDER CANAL

PCWA

APPROVED: Brian C. Martin (d)
BRIAN C. MARTIN, P.E.
DIRECTOR OF TECHNICAL SERVICES

DRAWING NO. S304

REVISION NO. 0

DATE: 09/03/10

ITEM	DESCRIPTION
1	LID – GALV. STEEL CHECKER PLATE OR GRATING TANK LID SHALL BE CAPABLE OF SUPPORTING A POINT LOAD OF 200 LBS. (MIN.)
2	OUTLET SHUT OFF VALVE, MATCH SIZE OF TANK OUTLET PIPE.
3	FLUSHING OUTLET, MATCH SIZE OF TANK OUTLET PIPE
4	THD RAW WATER SCREEN SIZED FOR 1/2" LOSS AT MAX. FLOW, MAX. SCREEN OPENING OF 1/2" (CUSTOMER SYSTEM INLET SCREEN SHOWN UPRIGHT FOR CLEANING).
5	OUTLET PIPING

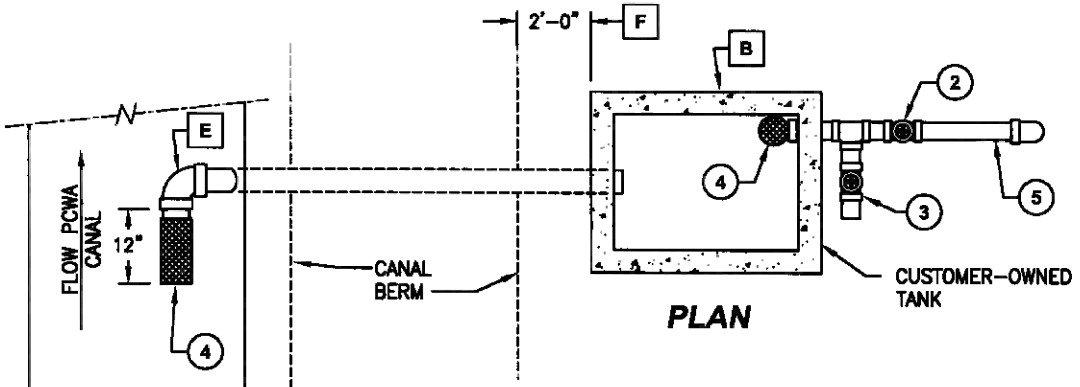

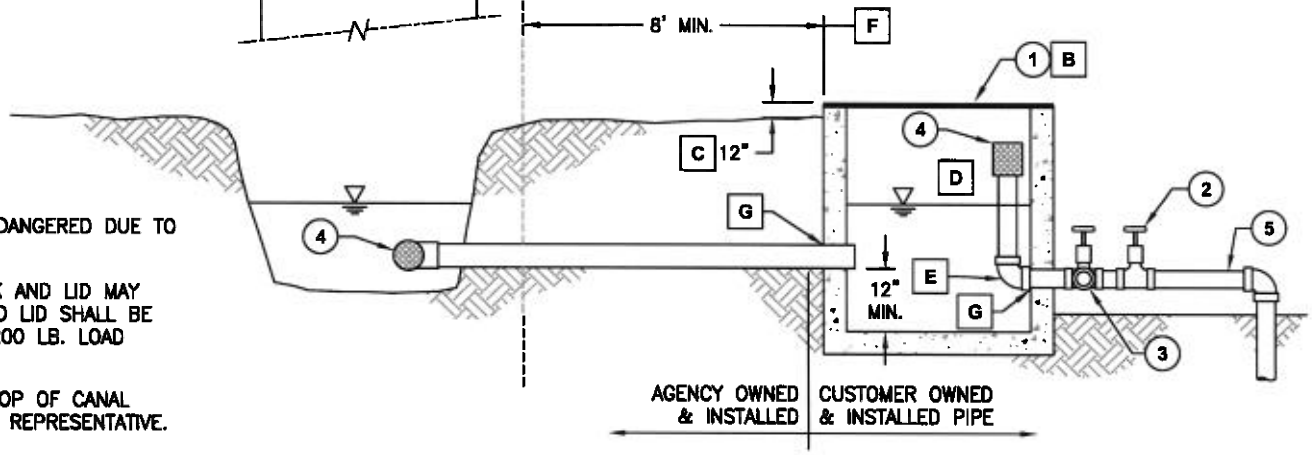

SECTION

NOTES:

A STABILITY OF BERM MUST NOT BE ENDANGERED DUE TO SUMP OR INLET PIPE INSTALLATION.

B MATERIAL FOR CONSTRUCTION OF TANK AND LID MAY BE CHOSEN BY CUSTOMER. TANK AND LID SHALL BE WATER TIGHT AND MUST SUPPORT A 200 LB. LOAD APPLIED TO THE LID.

C TOP OF TANK SHALL BE 12" ABOVE TOP OF CANAL BANK, OR AS DETERMINED BY AGENCY REPRESENTATIVE.

D WATER SURFACE ELEVATION DEPENDENT ON INSTALLATION SITE.

E INSTALL 90° EL TO ALLOW SCREEN TO BE ROTATED 90°.

F 2' MIN. FROM OUTSIDE EDGE OF BERM. 8' MIN. FROM INSIDE EDGE OF BERM, WHICHEVER IS GREATER.

G PIPE PENETRATION SHALL BE SEALED WITH A WATER TIGHT PROCESS DEPENDING ON TANK MATERIAL.

AN APPROVED PRODUCTS LIST IS LOCATED IN APPENDIX E.

CUSTOMER IRRIGATION WATER RECEIVING TANK

PCWA

APPROVED: Brian C. Martin (d)
BRIAN C. MARTIN, P.E.
DIRECTOR OF TECHNICAL SERVICES

DRAWING NO. S305

REVISION NO. 0

DATE: 09/03/10

ITEM	DESCRIPTION
1	GALV. STEEL CHECKER PLATE OR GRATING TANK LID SHALL BE CAPABLE OF SUPPORTING A POINT LOAD OF 200 LBS. (MIN.)
2	OUTLET SHUT OFF VALVE, MATCH SIZE OF TANK OUTLET PIPE.
3	FLUSHING OUTLET, MATCH SIZE OF TANK OUTLET PIPE
4	THD RAW WATER SCREEN SIZED FOR 1/2" LOSS AT MAX. FLOW, MAX. SCREEN OPENING OF 1/2".
5	FLANGE FITTING FOR ORIFICE PLATE.
6	OUTLET
7	VENT, MATCH INLET PIPE OR 2" DIAMETER MAXIMUM.
8	COMPRESSION COUPLING

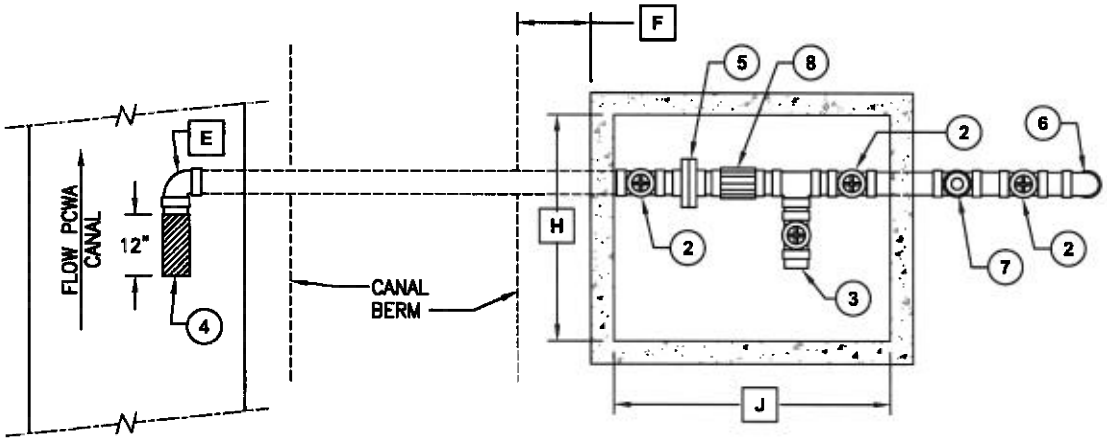

PLAN

NOTES:

A STABILITY OF BERM MUST NOT BE ENDANGERED DUE TO BOX OR INLET PIPE INSTALLATION.

B BOX AND LID TO BE INSTALLED BY CUSTOMER. MATERIAL FOR CONSTRUCTION OF TANK MAY BE CHOSEN BY CUSTOMER. TANK SHALL BE WATER TIGHT AND MUST SUPPORT A 200 LB. LOAD.

C TOP OF TANK SHALL BE 12" ABOVE TOP OF CANAL BANK, OR AS DETERMINED BY AGENCY REPRESENTATIVE.

D WATER SURFACE ELEVATION IS DEPENDENT ON INSTALLATION LOCATION.

E INSTALL 90° EL TO ALLOW SCREEN TO BE ROTATED 90°.

F SET BOX 2' MIN. FROM OUTSIDE EDGE OF BERM AND 8' MIN. FROM INSIDE EDGE OF BERM, WHICHEVER IS GREATER.

G VENT OUTLET TO BE FLUSH WITH OR HIGHER THAN TOP OF BOX.

H 36" OR 8X INLET PIPE DIAMETER, WHICHEVER IS GREATER, MINIMUM.

J 48" OR 10X INLET PIPE DIAMETER, WHICHEVER IS GREATER, MINIMUM.

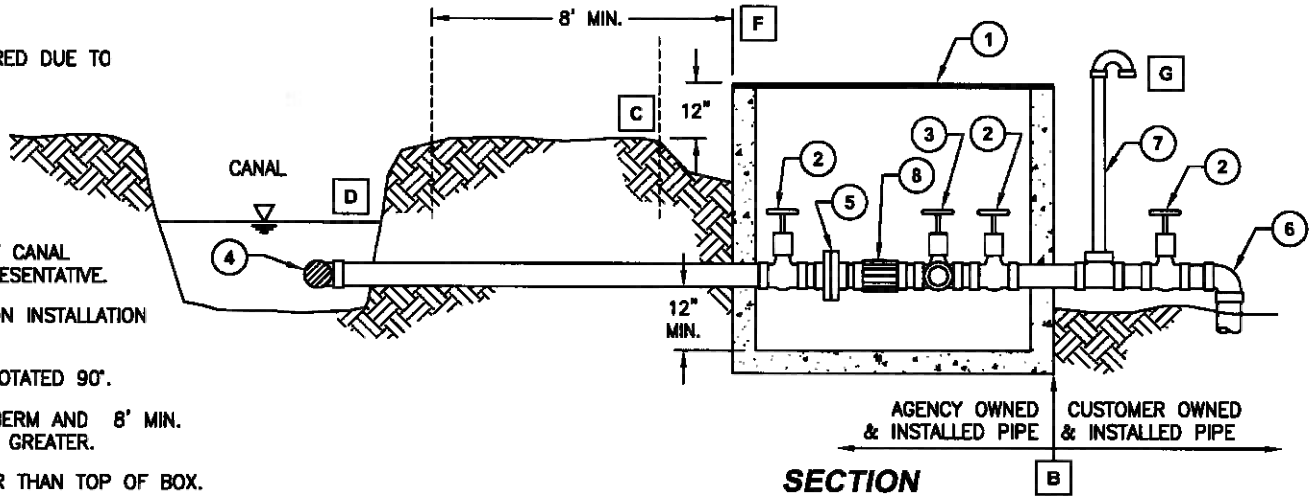

SECTION

AN APPROVED PRODUCTS LIST IS LOCATED IN APPENDIX E.

CUSTOMER IRRIGATION WATER HARD PIPED SERVICE

PCWA

APPROVED: Brian C. Martin (d)
BRIAN C. MARTIN, P.E.
DIRECTOR OF TECHNICAL SERVICES

DRAWING NO. S306

REVISION NO. 0

DATE: 09/03/10

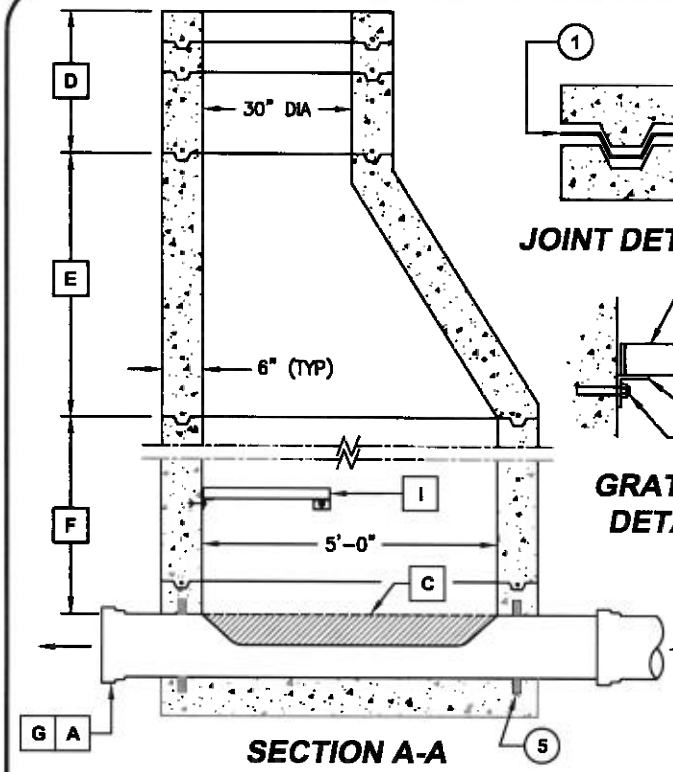

SECTION A-A

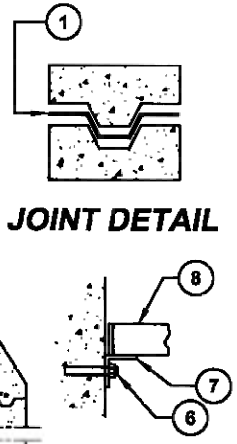

JOINT DETAIL

GRATING DETAIL

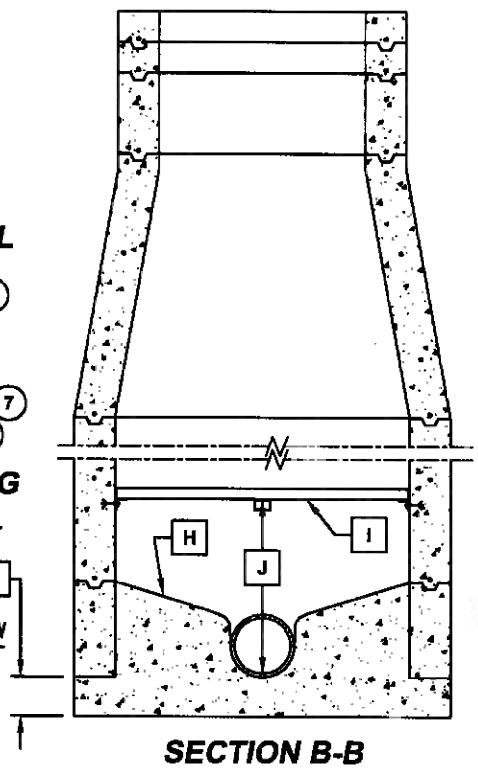

SECTION B-B

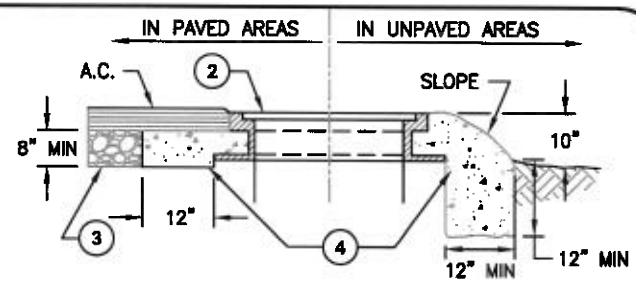

STANDARD MANHOLE FRAME & COVER

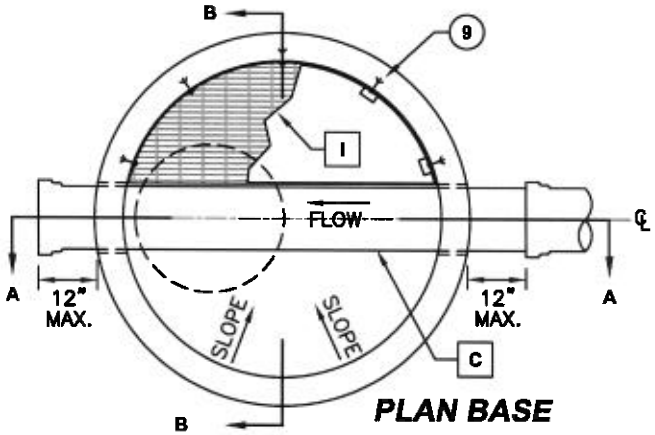

PLAN BASE

ITEM	DESCRIPTION
1	ASPHALT RUBBER STRIP OR EQUAL AT OUTSIDE HALF OF JOINTS, GROUT SEAL INSIDE HALF OF JOINTS.
2	MANHOLE LID PER S307 SET 1/2" BELOW FINISHED GRADE IN PAVED AREAS ABOVE EL. 2,000'
3	CLASS 2 AGGREGATE BASE
4	CAST IN PLACE CONCRETE W/ #4 REBAR CONT.
5	WATER STOP
6	1/2" SS ANCHOR BOLT
7	L2x2x1/4x0'-3" GALV. STEEL BRACKET
8	BANDED GALV. STEEL GRATING
9	GRATING BRACKET (TYP. OF 5 MIN.)

NOTES:

A	CAST PIPE W/WATER STOP INTO MANHOLE BASE.
B	8", 12" FOR DEPTHS GREATER THAN 15'.
C	CUT AWAY EXISTING PIPE TO SPRINGLINE.
D	3" TO 12" MAX. GRADE RING.
E	25", 27" OR 36" ECCENTRIC CONE.
F	12" TO 48" RISER SECTION.
G	PIPE TO 36"ø MAX. W/OUT ENGINEERED DRAWING.
H	SLOPE SHELF 1" IN 12".
I	PROVIDE PLATFORM CAPABLE OF SUPPORTING 300 LBS. WHEN REQIRED BY THE AGENCY.
J	HEIGHT OF PLATFORM TO BE SPECIFIED BY THE AGENCY

AN APPROVED PRODUCTS LIST IS LOCATED IN APPENDIX E.

STANDARD OPEN CHANNEL FLOW MANHOLE

PCWA

APPROVED: Brian C. Martin (d)
BRIAN C. MARTIN, P.E.
DIRECTOR OF TECHNICAL SERVICES

DRAWING NO. S307

REVISION NO. 0

DATE: 09/03/10

ITEM	DESCRIPTION
1	RAISED BLOCK TREAD FOR ASPHALT TRAFFIC AREAS, DIAMOND TREAD FOR WALK OR PEDESTRIAN AREAS
2	1" BOLT TABS (TYP.)
3	CONCEALED SIDE PRY/PICK HOLE 1-1/2" ±1/4"

NOTES:

A MIN. 2" LETTERS SHALL BE CAST INTO COVER, WELDED BY FOUNDRY OR GROUND IN PLACE BY MFG.

B MACHINED SURFACE

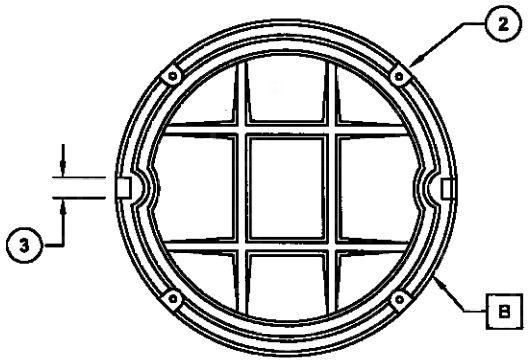

COVER-BOTTOM VIEW

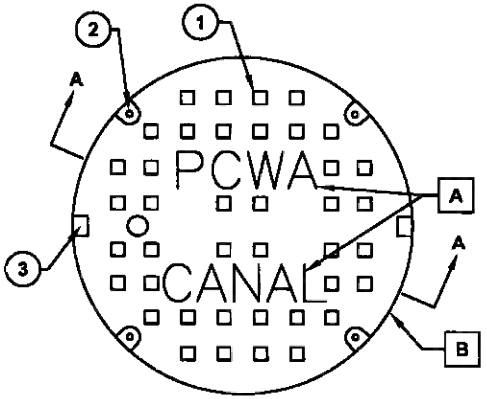

COVER-TOP VIEW

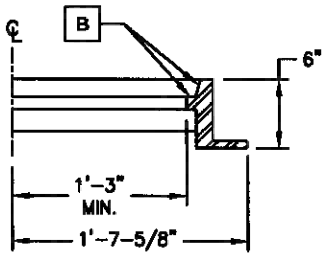

SECTION B-B

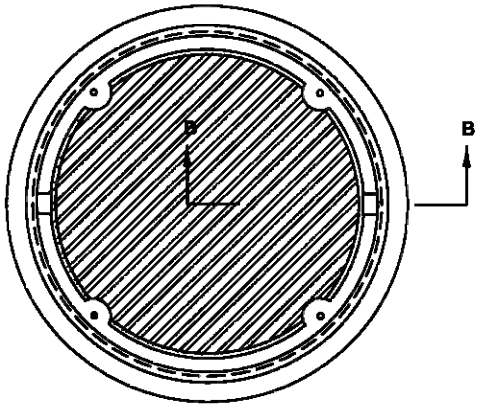

RING PLAN

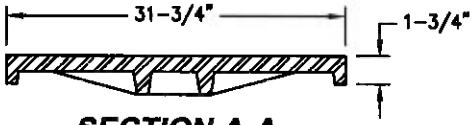

SECTION A-A

AN APPROVED PRODUCTS LIST IS LOCATED IN APPENDIX E.

MANHOLE FRAME AND COVER		DRAWING NO. S308
PCWA	APPROVED: Brian C. Martin (d) BRIAN C. MARTIN, P.E. DIRECTOR OF TECHNICAL SERVICES	REVISION NO. 0
		DATE: 09/03/10

ITEM	DESCRIPTION
1	2" x 2" x 1/8" GALVANIZED STEEL CHANNEL WITH 1-1/2" WIDE STEEL ANCHORS AT 12" CENTERS (MIN.)
2	2" x 6" REDWOOD PLANKS.

NOTES:

- A SLOPE BOTTOM TOWARD REDWOOD PLANKS, 1/4" PER FT.
- B ORIENT TRASH BOX SO LOW WALL FACES TRASH RACK AND PLANKED SIDE CAN BE ACCESSED BY SMALL LOADER.
- C PROVIDE #4 REBAR AT 12" CENTERS EVERYWHERE.
- D 3/4" CHAMFER SHALL BE USED ON ALL EXPOSED CONCRETE EDGES.
- E IF PRECAST ADD 1" DIA. X 2 EA. PICK HOLES FOR LIFTING. ONE EACH SIDE 4" BELOW TOP OF BOX.

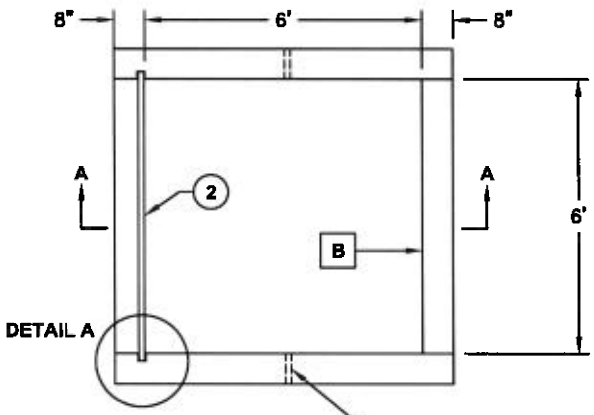

PLAN

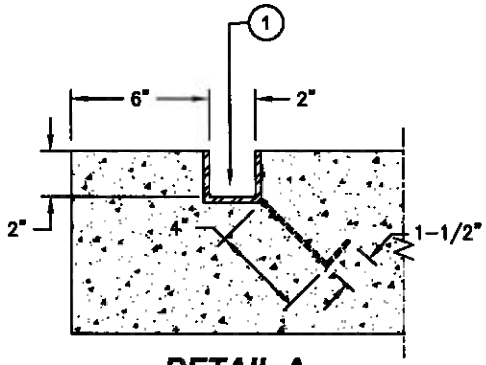

DETAIL A

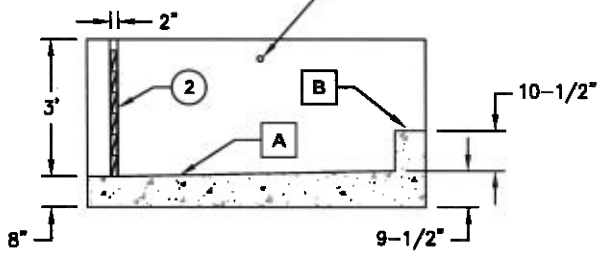

SECTION A-A

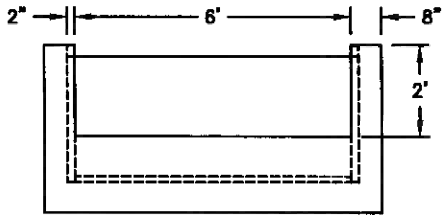

LOW WALL END ELEVATION

AN APPROVED PRODUCTS LIST IS LOCATED IN APPENDIX E.

TRASH RACK BOX	DRAWING NO. S309
PCWA — APPROVED: Brian C. Martin (d) BRIAN C. MARTIN, P.E. DIRECTOR OF TECHNICAL SERVICES	REVISION NO. 0
	DATE: 09/03/10

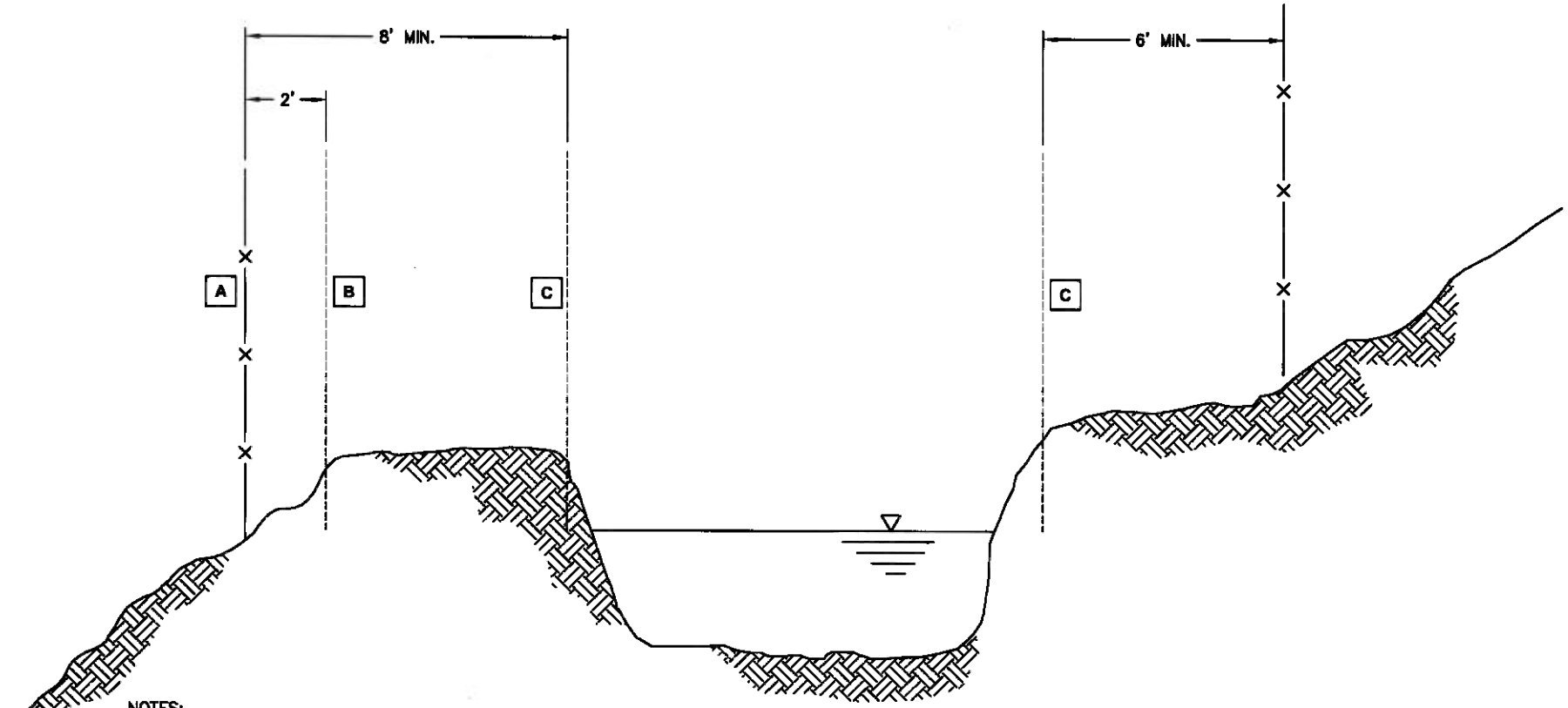

SECTION

NOTES:

- **A** FENCE SHALL BE A MINIMUM OF 8 FEET FROM THE INSIDE TOP OF BANK OR 2 FEET FROM THE OUTSIDE TOP OF BANK – WHICHEVER PLACES FENCE FURTHEST FROM CANAL.
- **B** OUTSIDE TOP OF CANAL BANK.
- **C** INSIDE TOP OF CANAL BANK.

AN APPROVED PRODUCTS LIST IS LOCATED IN APPENDIX E.

MINIMUM SETBACKS FOR FENCES PARALLEL TO CANALS		DRAWING NO. *S310*
PCWA	APPROVED: Brian C. Martin (d) BRIAN C. MARTIN, P.E. DIRECTOR OF TECHNICAL SERVICES	REVISION NO. *0*
		DATE: 09/03/10

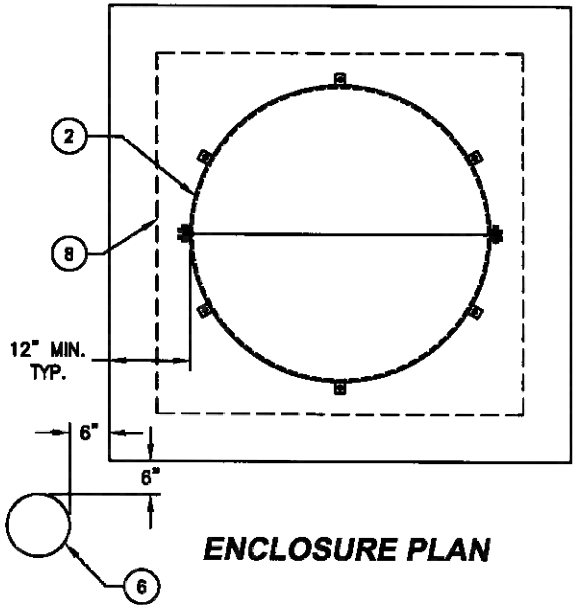

ENCLOSURE PLAN

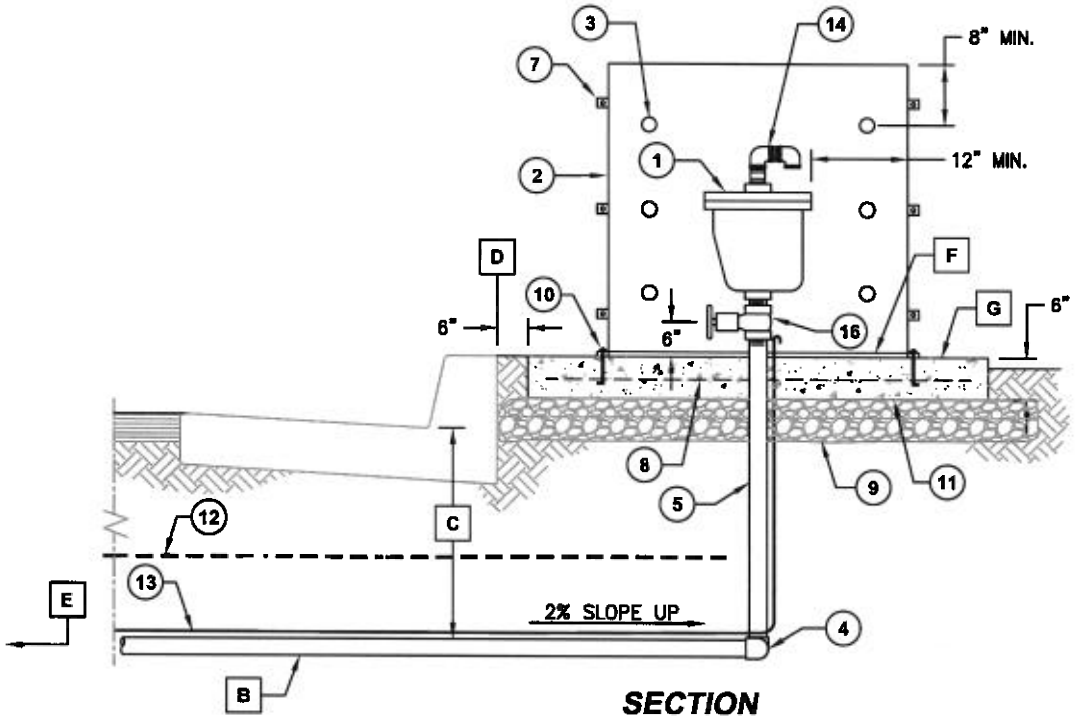

SECTION

ITEM	DESCRIPTION
1	COMBINATION AVRV. SEE TECHNICAL SPECIFICATIONS FOR SIZING.
2	STEEL AIR VENT ENCLOSURE
3	2"ø VENT HOLES, 3 PER COLUMN, 4 COLUMNS, EQUALLY SPACED BOTH WAYS 90° APART.
4	SWING JOINT (2–90° FITTINGS)
5	BRASS NIPPLE SIZE PER AVRV INLET
6	GUARD POST, TYP. OF 4 PER DETAIL S402
7	TAB & BOLT TO HOLD 2 HALVES TOGETHER, TYP. OF 6 EA.
8	#4 REBAR
9	6" OF 3/4" CRUSHED ROCK. EXTEND 6" ON ALL SIDES
10	1/2" X 6 EA. ANCHOR BOLTS, THROUGH TAB ON ENCLOSURE BASE
11	6" CONCRETE PAD
12	12" WIDE WARNING TAPE
13	LOCATING WIRE PER S109
14	GALV. STEEL PIPE VENT PER AVRV OUTLET

NOTES:

A WHERE POSSIBLE, PLACE AVRV'S WITHIN 10 FEET OF PROPERTY CORNERS.

B ALL PIPES AND FITTINGS TO BE BRASS OR BRONZE UNLESS OTHERWISE SHOWN.

C 30" MIN. COVER EXCEPT 24" MIN. COVER AT FLOW LINE OF GUTTER OR EP WITHOUT GUTTER.

D 6" FROM BACK OF WALK OR 6" FROM BACK OF CURB WHERE SIDEWALK IS NOT PROPOSED.

E SADDLE, CORP STOP, GATE VALVE AND VALVE BOX PER DETAIL S211.

F PROVIDE ½" AIRGAP FOR DRAINAGE.

G PROVIDE 2% SLOPE AWAY FROM ENCLOSURE.

AN APPROVED PRODUCTS LIST IS LOCATED IN APPENDIX E.

AIR VACUUM RELEASE VALVE 1"-2" (AVRV) RAW WATER

PCWA

APPROVED: Brian C. Martin (d)
BRIAN C. MARTIN, P.E.
DIRECTOR OF TECHNICAL SERVICES

DRAWING NO. S311

REVISION NO. 0

DATE: 09/03/10

EXISTING

- PIPE RESTRAINED LENGTH RL= ??' (LABEL BETWEEN LIMIT MARKERS)
- EXISTING PIPELINE
- RESTRAINT LIMIT SYMBOLS (R LEFT AND R RIGHT)
- DOMESTIC PIPELINE WITH SIZE
- RAW WATER PIPELINE
- GATE VALVE
- BUTTERFLY VALVE
- CHECK VALVE
- PRESSURE REDUCING VALVE WITH SIZE
- ALTITUDE VALVE
- PRESSURE RELIEF VALVE WITH SIZE
- SERVICE LATERAL WITH METER BOX
- AIR/VACUUM RELEASE VALVE
- BLOWOFF WITH SIZE
- BACKFLOW PREVENTION DEVICE
- FIRE HYDRANT RESTRAINED? ADD "R"
- WHARF HYDRANT TYPE BLOWOFF ADD "R" IF RESTRAINED
- PUMP
- REDUCER
- TELEMETRY STATION (MONITORING OR CONTROL AND RADIO OR PHONE)

PROPOSED

- PIPE RESTRAINED LENGTH RL= ??' (LABEL BETWEEN LIMIT MARKERS)
- NEW PIPELINE
- RESTRAINT LIMIT SYMBOLS (R LEFT AND R RIGHT)
- DOMESTIC PIPELINE WITH SIZE
- DOMESTIC PIPELINE WITH SIZE
- GATE VALVE
- BUTTERFLY VALVE
- CHECK VALVE
- PRESSURE REDUCING VALVE WITH SIZE
- ALTITUDE VALVE
- PRESSURE RELIEF VALVE WITH SIZE
- SERVICE LATERAL WITH METER BOX
- AIR/VACUUM RELEASE VALVE–NOTE SIZE IF OVER 1"
- BLOWOFF WITH SIZE
- DOUBLE CHECK VALVE ASSEMBLY
- DOUBLE CHECK–DETECTOR CHECK VALVE ASSEMBLY
- REDUCED PRESSURE PRINCIPAL BACKFLOW PREVENTION ASSEMBLY
- REDUCED PRESSURE PRINCIPAL DETECTOR ASSEMBLY
- RESTRAINED FIRE HYDRANT
- PUMP
- HYDROPNEUMATIC TANK
- TELEMETRY STATION (MONITORING OR CONTROL AND RADIO OR PHONE)
- SAMPLING STATION
- MONITORING TEST STATION
- ANODE TEST STATION
- REDUCER

AN APPROVED PRODUCTS LIST IS LOCATED IN APPENDIX E.

NOTES

1. THESE SYMBOLS SHALL BE USED ON ALL PLANS TO BE APPROVED BY P.C.W.A.
2. VALVE SIZE IS SAME AS LINE SIZE UNLESS OTHERWISE NOTED.

WATER SYMBOLS LEGEND

PCWA

APPROVED: Brian C. Martin (d)
BRIAN C. MARTIN, P.E.
DIRECTOR OF TECHNICAL SERVICES

DRAWING NO. S401

REVISION NO. 0

DATE: 09/03/10

ITEM	DESCRIPTION
1	6" GALV. SCH. 40 STEEL PIPE PAINTED OSHA SAFETY YELLOW, SYSTEM 12, PER AGENCY STANDARDS
2	WELDED STEEL PLATE GROUND FLUSH AND SMOOTH
3	1/2" ROUND STOCK LIFTING LOOP
4	FB 3/8"x1"x1'-1" LOCKING BAR
5	3 BANDS OF HI-INTENSITY REFLECTIVE TAPE, 2" SILVER, SPACED 4" ON CENTER
6	3/4" DRAIN ROCK WRAPPED IN FILTER FABRIC
7	7" I.D. x 1/4" STEEL TUBE
8	CLASS A CONCRETE
9	1"x1-1/2" SLOT
10	PL 3/8"x13-1/2"ø STEEL

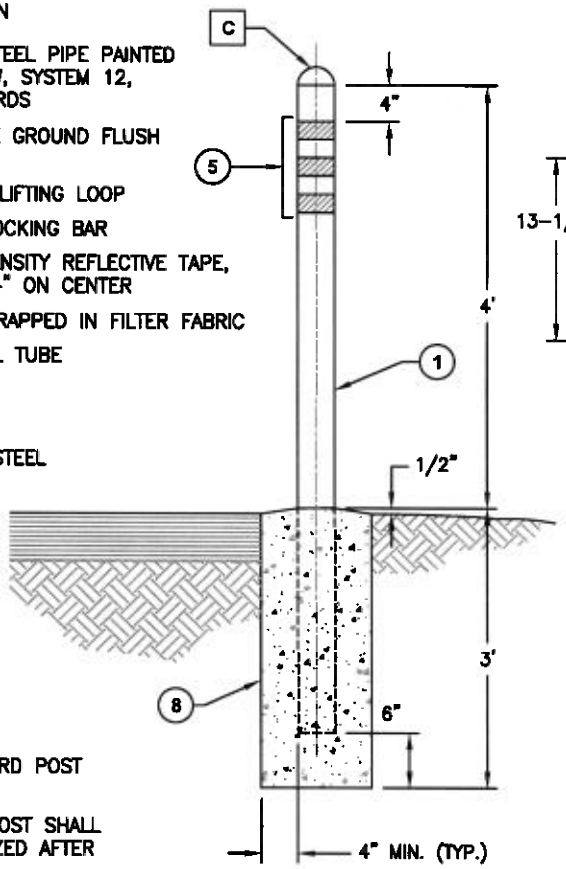

PERMANENT

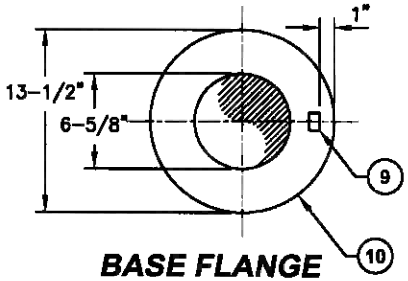

BASE FLANGE PLAN

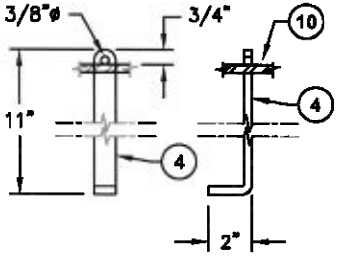

LOCKING BAR DETAIL

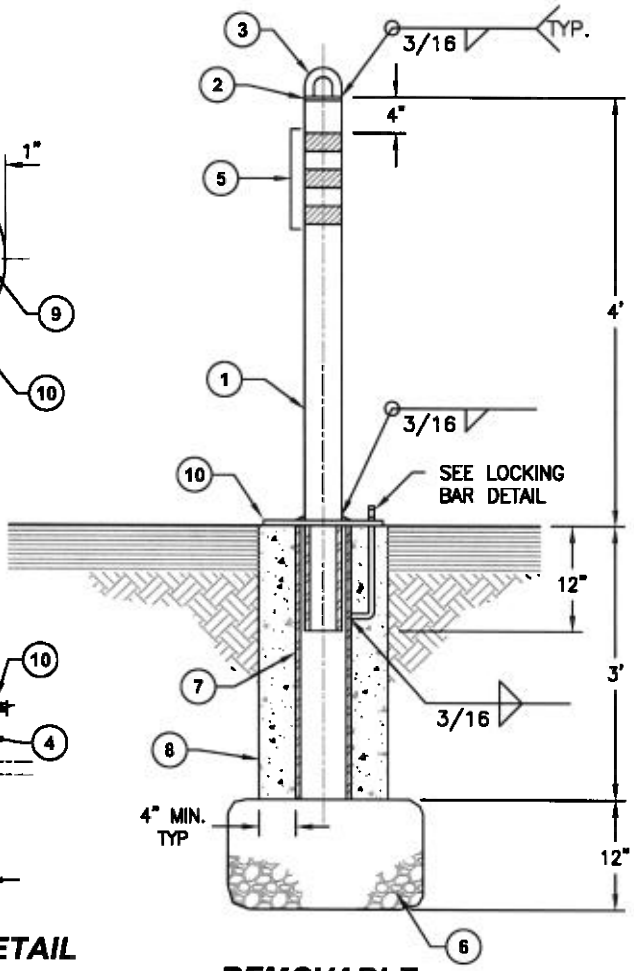

REMOVABLE

NOTES:

A FILL PERMANENT GUARD POST PIPE WITH CONCRETE

B REMOVABLE GUARD POST SHALL BE HOT DIP GALVANIZED AFTER FABRICATION.

C SMOOTH FINISH MORTAR DOME.

D DEBUR ALL SHARP EDGES BEFORE PAINTING

AN APPROVED PRODUCTS LIST IS LOCATED IN APPENDIX E.

GUARD POST DETAIL	DRAWING NO. S402
PCWA APPROVED: Brian C. Martin (d) BRIAN C. MARTIN, P.E. DIRECTOR OF TECHNICAL SERVICES	REVISION NO. 0
	DATE: 09/03/10

CASE 1:

AIR GAP–EQUIPPED TANKER TRUCK

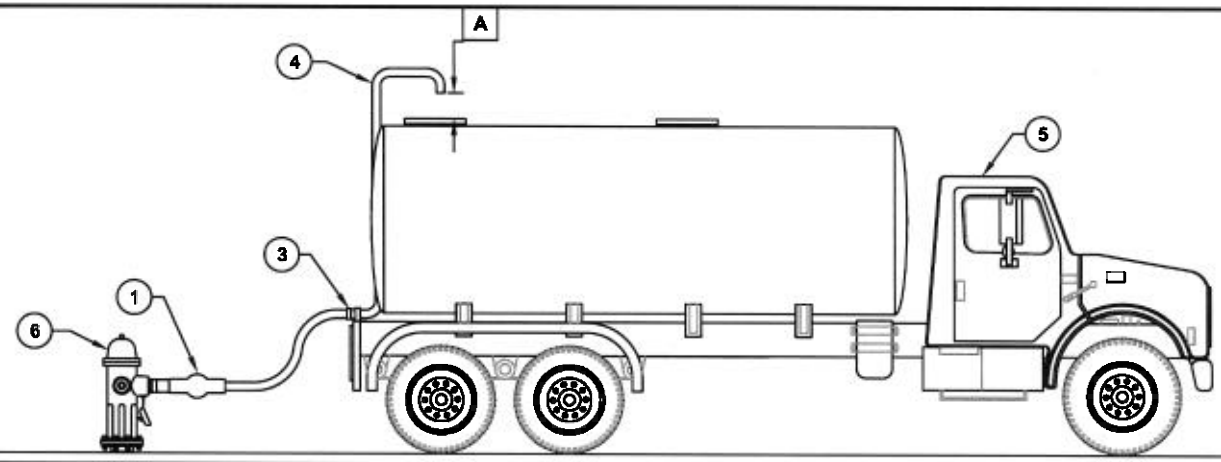

CASE 2:

REDUCED–PRESSURE BACKFLOW PREVENTION DEVICE USED

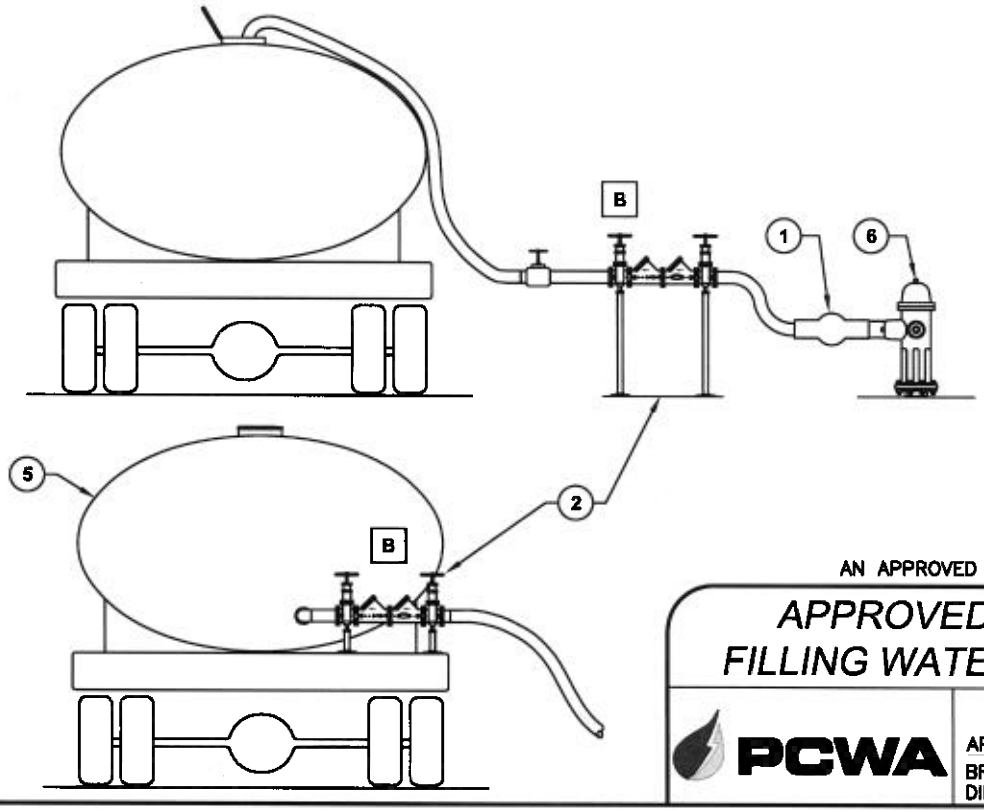

ITEM	DESCRIPTION
1	HYDRANT METER PROCURED FROM AGENCY
2	TRUCK–MOUNTED OR TEMPORARY REDUCED PRESSURE BACKFLOW PREVENTION DEVICE
3	HOSE CONNECTION
4	PIPE ATTACHED TO WATER TRUCK
5	WATER TRUCK
6	AGENCY APPROVED SOURCE OF WATER

NOTES:

A — AIR GAP (AT LEAST 2X PIPE DIAMETER FROM FLOOD RIM OF TANK AND >12").

B — REDUCED–PRESSURE BACKFLOW PREVENTION DEVICE MUST BE TESTED AND CERTIFIED ACCURATE. SUBMIT CERTIFICATE TO AGENCY PRIOR TO USE.

AN APPROVED PRODUCTS LIST IS LOCATED IN APPENDIX E.

APPROVED METHODS FOR FILLING WATER TANKER TRUCKS

PCWA

APPROVED: Brian C. Martin (d)
BRIAN C. MARTIN, P.E.
DIRECTOR OF TECHNICAL SERVICES

DRAWING NO. S403

REVISION NO. 0

DATE: 09/03/10

ITEM	DESCRIPTION
1	WELDED STEEL PIPE CASING, 24" MIN. INSIDE DIA., MIN. WALL THICKNESS PER TABLE BELOW, MIN. YIELD STRENGTH 36,000 PSI BEFORE COLD FORMING.
2	POLYURETHANE SKIDS DESIGNED TO ELECTRICALLY ISOLATE CARRIER PIPE FROM CASING AND TO PREVENT CARRIER PIPE FLOTATION. ADDITIONAL SKIDS MAY BE NECESSARY TO SUPPORT CARRIER PIPE (STEEL CASING ONLY)
3	12" MIN. LOW-STRENGTH CONCRETE OR SAND CEMENT SLURRY PLUG AT EACH END OF CASING
4	CARRIER PIPE RESTRAINED THROUGHOUT CASING LENGTH. ENSURE METALLIC CARRIER PIPE JOINT RESTRAINT SYSTEM DOES NOT CONTACT CASING
5	SANDBAGS TO FORM INSIDE OF CONCRETE END PLUG, WHEN SPACE ALLOWS.
6	HDPE CASING SHALL HAVE AN SDR OF 17 OR LESS
7	ALL JOINTS IN HDPE CASING AND HDPE CARRIER PIPE SHALL BE FUSION WELDED
8	CONNECT TO ENDS OF HDPE CARRIER PIPE WITH RESTRAINED MJ OR FLANGE ADAPTER W/SPLIT BACKUP RING
9	POLYURETHANE SKIDS DESIGNED TO PREVENT CARRIER PIPE FLOTATION. ADDITIONAL SKIDS MAY BE NECESSARY TO SUPPORT CARRIER PIPE

NOTES

- **A** IF METALLIC CASING PIPE IS USED, PROVIDE AN ENGINEERED CATHODIC PROTECTION SYSTEM TO PROTECT CASING.
- **B** MAX 6" DIA. CARRIER PIPE WITHOUT ENGINEERED DESIGN.
- **C** PROVIDE BENTONITE SLURRY ON SITE DURING CARRIER INSTALLATION FOR USE AS LUBRICANT.
- **D** PROVIDE WEAK-LINK OR BREAKAWAY DEVICE CALIBRATED TO PIPE MANUFACTURER'S RECOMMENDED ALLOWABLE TENSILE LOADS FOR PULLING OPERATIONS.
- **E** ALLOW 24-HR. RELAXATION PERIOD BEFORE HDPE CARRIER IS CONNECTED AT ENDS OF CROSSING.

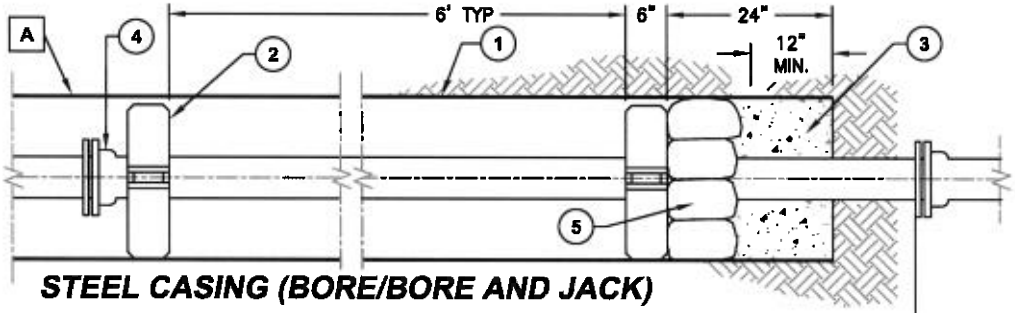

STEEL CASING (BORE/BORE AND JACK)

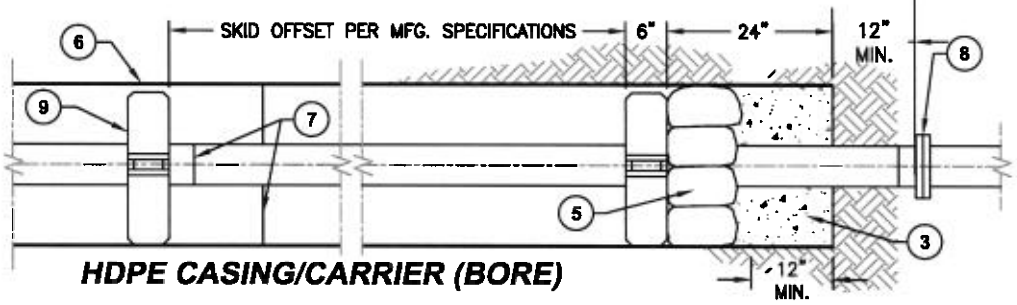

HDPE CASING/CARRIER (BORE)

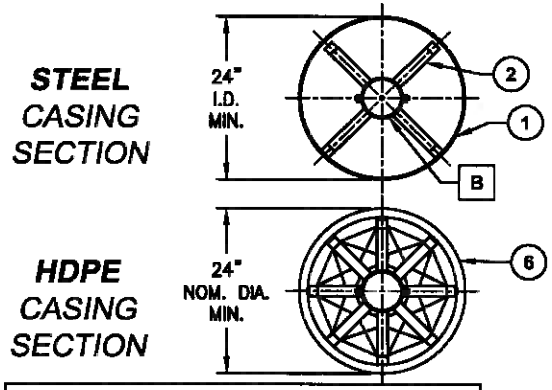

MIN. STEEL CASING WALL THICKNESS			
PIPE SIZE	CASING LENGTH (FT.)		
24" I.D.	<100	100-200	>200
	1/4"	5/16"	3/8"

AN APPROVED PRODUCTS LIST IS LOCATED IN APPENDIX E.

PIPE CASING AND CARRIER PIPE SUPPORTS

PCWA

APPROVED: Brian C. Martin (d)
BRIAN C. MARTIN, P.E.
DIRECTOR OF TECHNICAL SERVICES

DRAWING NO. S404

REVISION NO. 0

DATE: 09/03/10

ITEM	DESCRIPTION
1	STEEL PIPE SLEEVE, 1/4" THICK MIN., GALVANIZED AFTER FABRICATION
2	ADJUSTABLE LINKED RUBBER SEAL WITH STAINLESS STEEL METALLIC PARTS ON INSIDE FACE OF VAULT OR WALL
3	1/4" THICK STEEL WEEP RING
4	NON-SHRINK GROUT
5	PIPELINE OR CONDUIT
6	MASTIC SEALANT W/FOAM OR MINERAL WOOL BACKER ROD

NOTES:

A THIS DETAIL IS APPLICABLE ONLY IN STABLE SOIL CONDITIONS. PROVIDE AN ENGINEERED DESIGN FOR OTHER CONDITIONS.

B CORE-DRILL THE WALL PENETRATION.

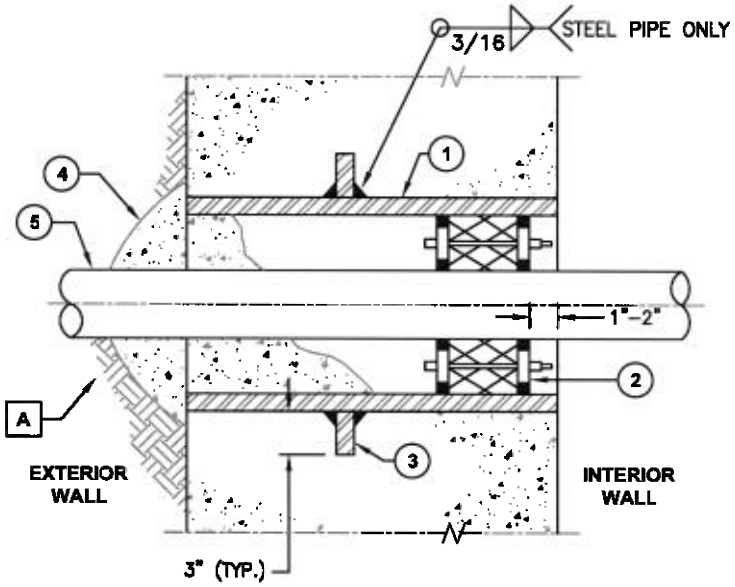

NEW WALL INSTALLATION

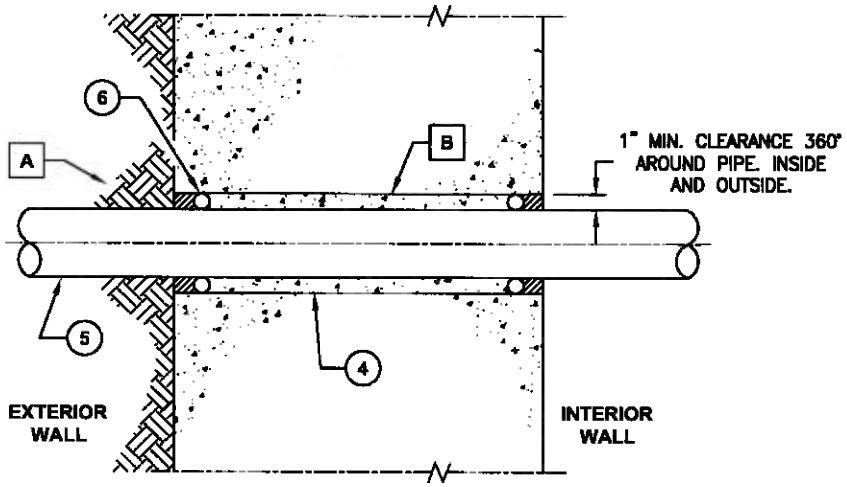

EXISTING WALL INSTALLATION

AN APPROVED PRODUCTS LIST IS LOCATED IN APPENDIX E.

WALL PENETRATION		DRAWING NO. *S405*
PCWA	APPROVED: Brian C. Martin (d) BRIAN C. MARTIN, P.E. DIRECTOR OF TECHNICAL SERVICES	REVISION NO. *0*
		DATE: 09/03/10

ITEM	DESCRIPTION
1	1"x14 GA. SQUARE TUBE PICKET (TYP)
2	1-3/4"x1-3/4"x14 GA. CHANNEL RAIL (TYP)
3	2-1/2"x12 GA. SQUARE TUBE POST (TYP)
4	CONCRETE FOOTING (SEE PCWA CONCRETE SPEC)
5	2-1/2"x2-1/2" STEEL CAP (TYP)

NOTE:

A ALL STEEL SHALL RECEIVE POWDER COATING AFTER FABRICATION. COLOR: BLACK

B END OF PICKET TO FORM POINT. NO CRACKING AROUND FORMED POINT EDGES WILL BE ACCEPTABLE.

C PLACE FENCE 18" INSIDE PROPERTY LINE.

D PICKETS CAN BE WELDED TO RAILS OR ATTACHED BY OTHER MFG. PROCEDURE WITH PRIOR PCWA APPROVAL. RAILS SHALL BE BOLTED TO THE POSTS.

E COMPLETED SECTIONS (PANELS) SHALL BE CAPABLE OF SUPPORTING A 600 LB. LOAD APPLIED AT MIDSPAN WITHOUT PERMANENT DEFORMATION. PANELS SHALL BE BIASABLE TO A 25% CHANGE IN GRADE.

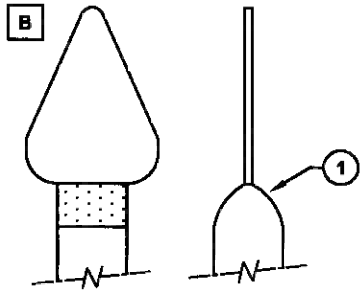

DETAIL A

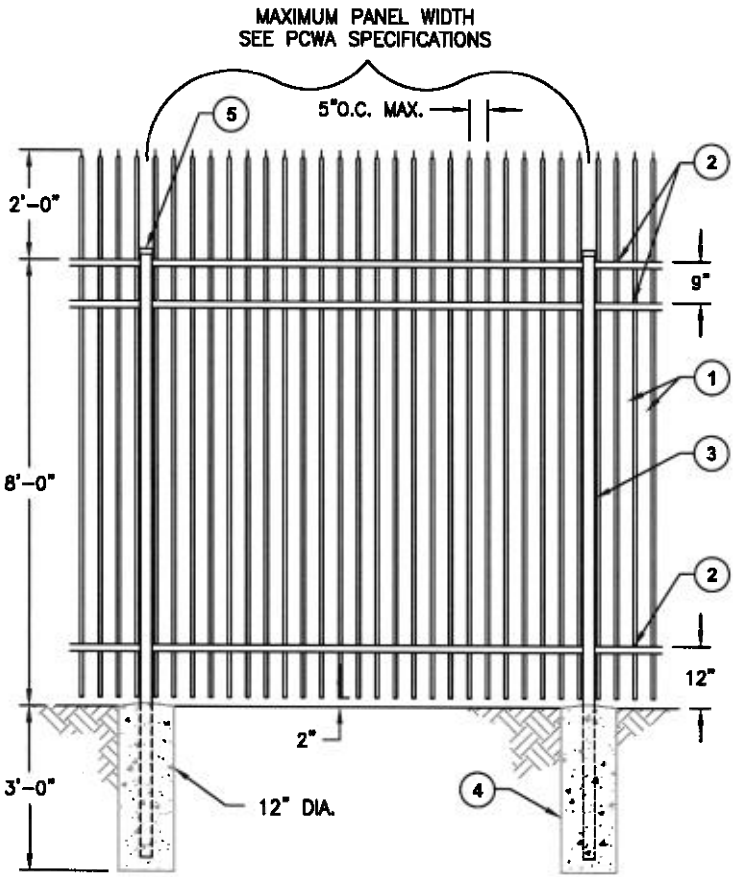

ELEVATION

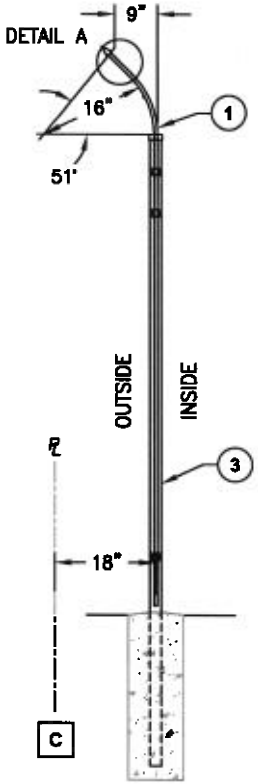

SECTION

AN APPROVED PRODUCTS LIST IS LOCATED IN APPENDIX E.

INDUSTRIAL ORNAMENTAL FENCE		DRAWING NO. *S406*
PCWA	APPROVED: Brian C. Martin (d) BRIAN C. MARTIN, P.E. DIRECTOR OF TECHNICAL SERVICES	REVISION NO. *0*
		DATE: 09/03/10

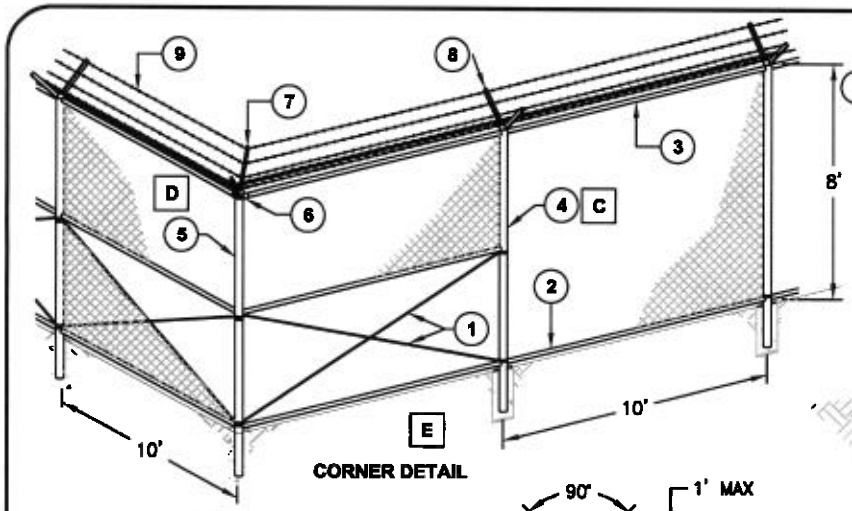

CORNER DETAIL

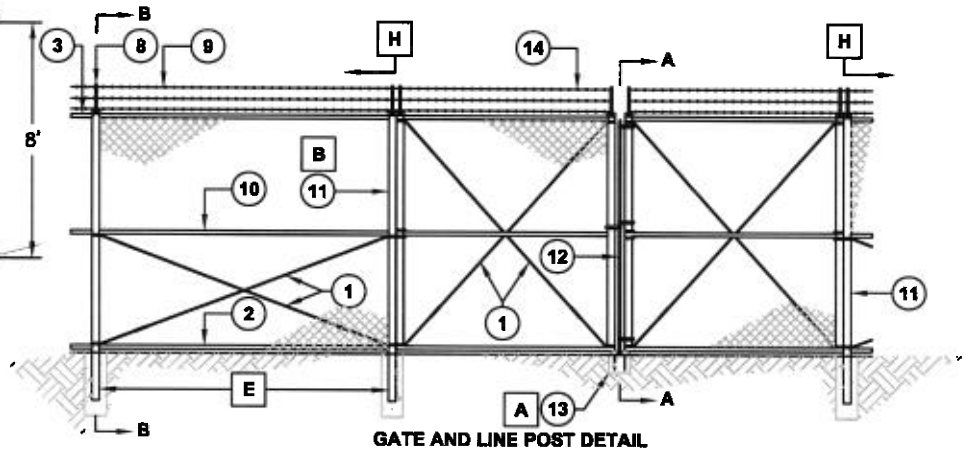

GATE AND LINE POST DETAIL

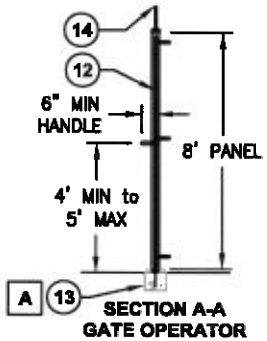

SECTION A-A
GATE OPERATOR

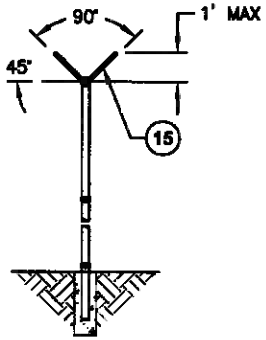

SECTION B-B
SIDE VIEW PANEL

NOTES:

- **A** SEE S408 FOR ADDITIONAL FENCE APPURTENANCES
- **B** GATE POST SIZE SHALL BE MIN. 6" I.D. FOR GATE WIDTHS OF 6' TO 12'
- **C** LINE POST SIZE SHALL BE MIN. 2-1/2" I.D.
- **D** END, LATCH AND CORNER POST SIZE SHALL BE MIN. 3" I.D.
- **E** PROVIDE BRACE AND TRUSS ROD PANEL EVERY 100 FT. MIN., AT CORNERS AND PANELS ADJACENT TO GATES
- **F** HORIZONTAL BRACE, BOTTOM RAIL, MIDDLE RAIL AND TOP RAIL SIZE SHALL BE 1-5/8" DIA. MIN.
- **G** GATE KEEPERS ARE REQUIRED FOR ALL SWING GATES (SEE S408).
- **H** TRANSITION FROM VERTICAL ARMS TO VICTORY ARMS AT THE GATE POST WHEN THE GATE WILL OPEN 90° OR LESS. CONTINUE VERTICAL ARMS ON THE PANEL ADJACENT TO THE GATE IF THE GATE WILL OPEN OVER 90°, FOR SLIDE OPERATING GATES, MAINTAIN VERTICAL ARMS TO THE NEXT POST PAST THE LENGTH OF THE OPEN GATE.
- **I** DISTANCE FROM BOTTOM RAIL TO FINISHED GRADE MUST BE NO GREATER THAN 1". GRADING MAY BE REQUIRED ALONG THE PROPOSED FENCE ALIGNMENT TO MAINTAIN THE 1 INCH MAXIMUM DISTANCE.

AN APPROVED PRODUCTS LIST IS LOCATED IN APPENDIX E.

ITEM	DESCRIPTION
1	TRUSS RODS (ADJUSTABLE)
2	BOTTOM RAIL (TYP)
3	TOP RAIL
4	LINE POST
5	CORNER POST
6	RAIL END (TYP)
7	MALLEABLE IRON VICTORY ARMS REQUIRED FOR CORNERS
8	STANDARD VICTORY ARMS
9	BARBED WIRE (TYP)

ITEM	DESCRIPTION
10	MIDDLE RAIL
11	GATE POST
12	1"ø GATE DROP ROD ASSEMBLY
13	GATE ANTI-SWING FOOTING (SEE GATE ANTI-SWING DETAIL S408)
14	3 STRAND BARBED WIRE, VERTICAL ON GATES (TYP ALL GATES)
15	VICTORY ARMS 3 STRAND BARBED WIRE FOR INSIDE RUN AND OUTSIDE RUN (TYPICAL ALL PANELS EXCEPT GATES)

STANDARD FENCE DETAIL

DRAWING NO. S407

REVISION NO. 0

DATE: 09/03/10

PCWA

APPROVED: Brian C. Martin (d)
BRIAN C. MARTIN, P.E.
DIRECTOR OF TECHNICAL SERVICES

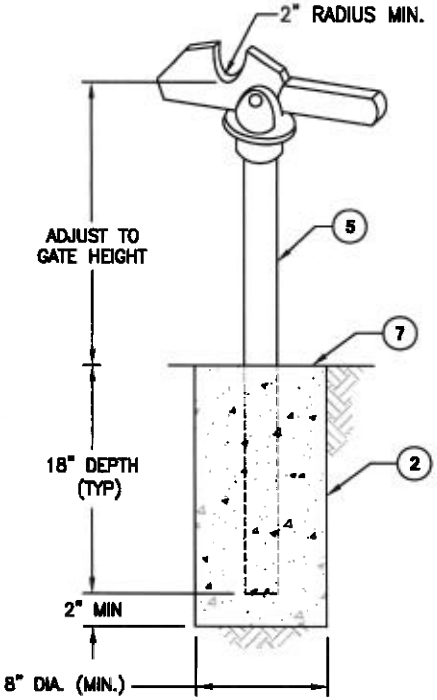

GATE KEEPER

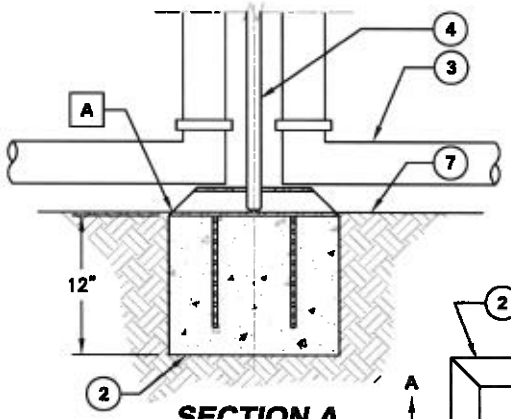

SECTION A

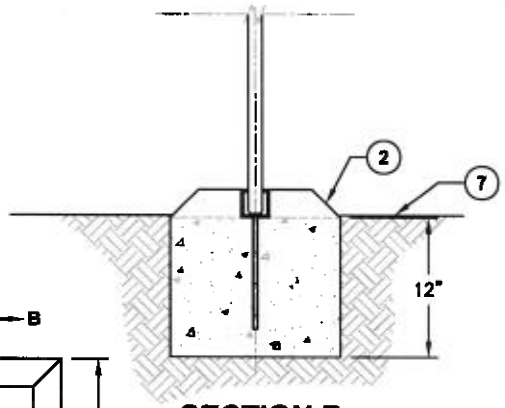

SECTION B

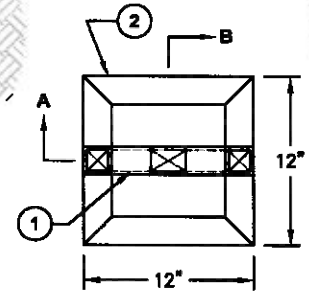

PLAN

GATE ANTI-SWING FOOTING DETAIL

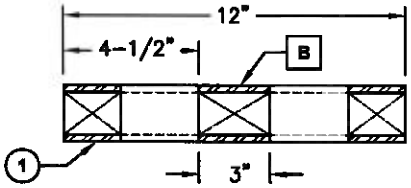

PLAN

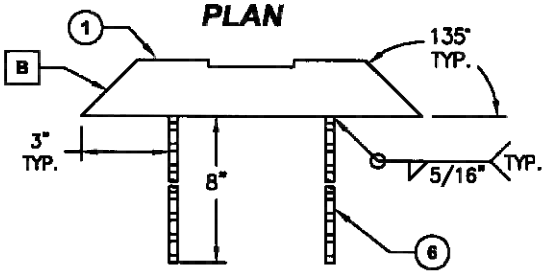

SECTION GATE POLE KEEPER

ITEM	DESCRIPTION
1	2"x2"x.0.25"x12'-0" LONG SQUARE TUBE. HOT DIP GALV. AFTER FABRICATION
2	CONC. FOOTING
3	FENCE GATE 2"ø GATE RAIL
4	1"ø FENCE GATE DROP ROD ASSEMBLY
5	GALV. STEEL GATE KEEPER
6	#5 REBAR, TYP.
7	FINISHED GRADE

NOTES:

A BOTTOM INSIDE LIP OF SQUARE TUBE TO MATCH FINAL GRADE. KEEP ENDS OF TUBE OPEN, CLEAR OF CONCRETE

B CUT 1-1/2" DEEP BY 3" LONG HOLE IN TOP OF SQUARE TUBING, TRIM ENDS AS SHOWN.

AN APPROVED PRODUCTS LIST IS LOCATED IN APPENDIX E.

STANDARD FENCE GATE ANTI-SWING DETAILS		DRAWING NO. S408
PCWA	APPROVED: Brian C. Martin (d) BRIAN C. MARTIN, P.E. DIRECTOR OF TECHNICAL SERVICES	REVISION NO. 0 DATE:09/03/10

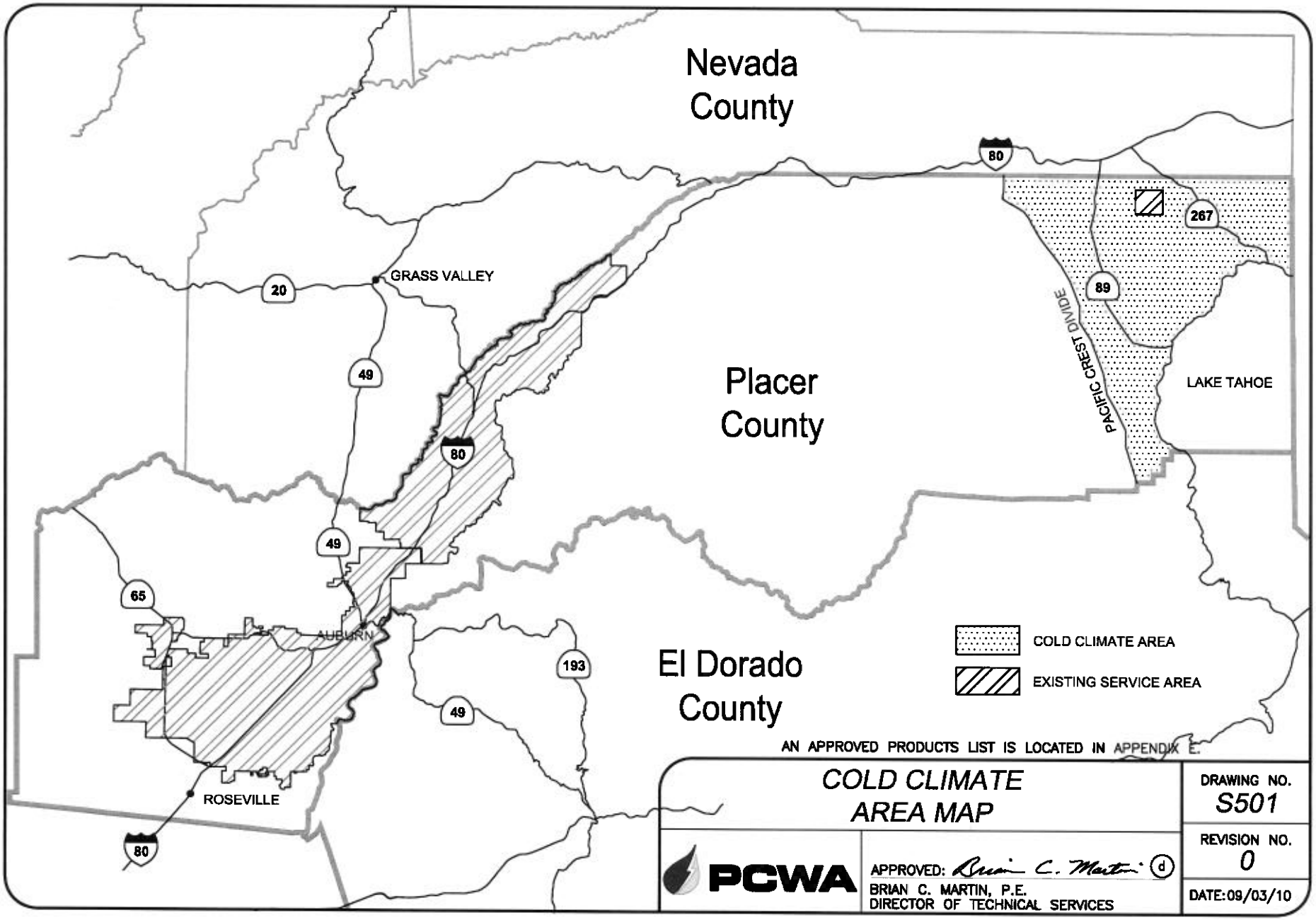

AN APPROVED PRODUCTS LIST IS LOCATED IN APPENDIX E.

COLD CLIMATE AREA MAP		DRAWING NO. *S501*
PCWA	APPROVED: Brian C. Martin (d) BRIAN C. MARTIN, P.E. DIRECTOR OF TECHNICAL SERVICES	REVISION NO. *0*
		DATE: 09/03/10

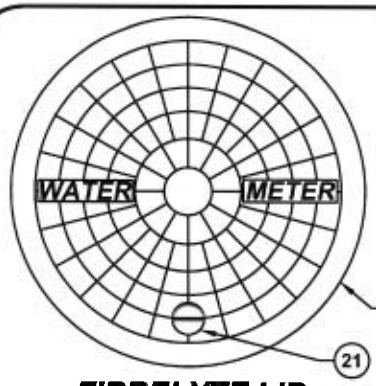

FIBRELYTE LID

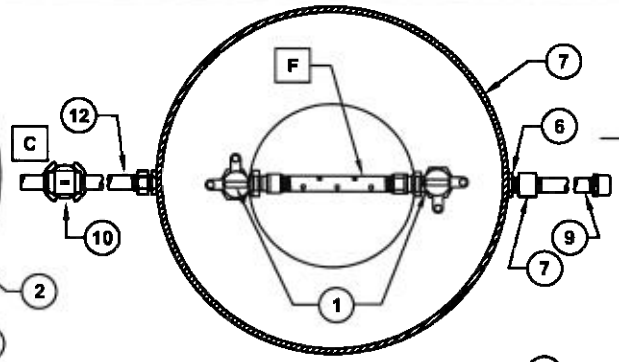

PLAN VIEW

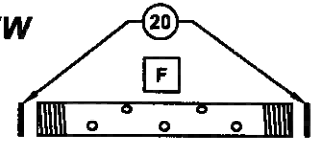

METER SPACER

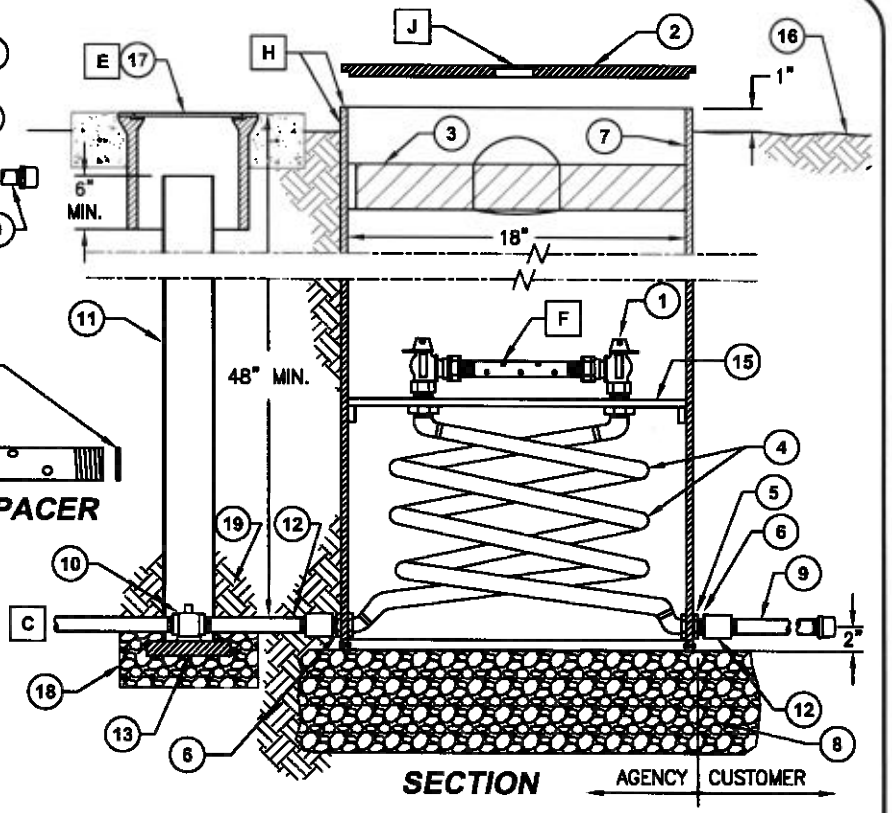

SECTION

ITEM	DESCRIPTION
1	BRASS FULL PORT ANGLE BALL VALVE (TYP)
2	18" POLYMER CONCRETE LID (METAL LIDS WILL NOT BE ALLOWED)
3	18" DIA. x 4" THICK CLOSED-CELL FOAM PAD W/NYLON STRAP HANDLE, NOTCHED TO ACCOMMODATE ERT WIRE
4	1" POLYBUTYLENE COILS CLASS 250, PER ASTM D-2666
5	1" HEX KEEPER NUT (TYP.) OF 4 EA.
6	1" NPT INLET & OUTLET CONNECTIONS
7	18" DIAMETER X 54" MIN. LENGTH, THERMAL COIL, ALUMINUM BOTTOM, SINGLE COIL METER PIT, PVC SHELL MIN. WALL THICK. = 0.300" (EXTENSIONS SHALL NOT BE ALLOWED)
8	6" OF 3/4" CRUSHED ROCK. EXTEND 6" ON ALL SIDES
9	1"x24" NPT BRASS OR BRONZE NIPPLE W/BRASS CAP
10	1" NPT CORP STOP
11	4" SDR 35
12	1" NPT BRASS NIPPLE
13	6"x8"x2" MIN. MASONRY BLOCK
14	N/A
15	PVC PLATFORM AS PROVIDED BY VAULT MANUFACTURER
16	FINISHED GRADE
17	VALVE BOX PER S106
18	4" OF 3/4" CRUSHED ROCK MIN.
19	SELECT BACKFILL
20	INSTALL METER SPACER GASKETS
21	PICK ROD IN RECESS

NOTES:

- A INSTALL METER PIT IN LANDSCAPED AREAS WITH BASE PLATE, METER SPACER, ALUMINUM BASE AND POLYMER CONCRETE LID INSTALLED.
- B INSTALL CURB STOP 12" FROM PROPERTY LINE.
- C SEE S201 FOR CONNECTION TO MAIN.
- D METER AND ERT TO BE PROVIDED BY PCWA.
- E CENTER G5 OVER VALVE WELL EXTENSION.
- F CONTRACTOR TO INSTALL A 1" DIA. X 10-3/4" LONG SCH 80 PVC PIPE NIPPLE W/ 5 EA X ¼" DIA. HOLES THROUGH BOTH SIDES (INSTALL WITH GASKETS ON EACH END).
- G DO NOT OVER COMPACT METER TUBE. VERIFY THAT THE PLATFORM CAN BE REMOVED WITHOUT INCIDENCE.

NOTES (CONTINUED):

- H THE OUTSIDE TOP 4" OF THE METER PIT AND TOP RIM SHALL BE COATED WITH BLACK, GREEN OR BROWN, ARMORPOXY PAINT.
- I SLOTTING OF BASE PLATE FOR ANGLE VALVES IS NOT PERMITTED.
- J ERT HOLE SHALL BE 1-15/16" DIA. WITH A 2-1/2" X 3/16" RECESS.

AN APPROVED PRODUCTS LIST IS LOCATED IN APPENDIX E.

COLD CLIMATE METER PIT FOR 1" AND SMALLER METERS

PCWA

APPROVED: Brian C. Martin

BRIAN C. MARTIN, P.E.
DIRECTOR OF TECHNICAL SERVICES

DRAWING NO. S502

REVISION NO. 0

DATE: 09/03/10

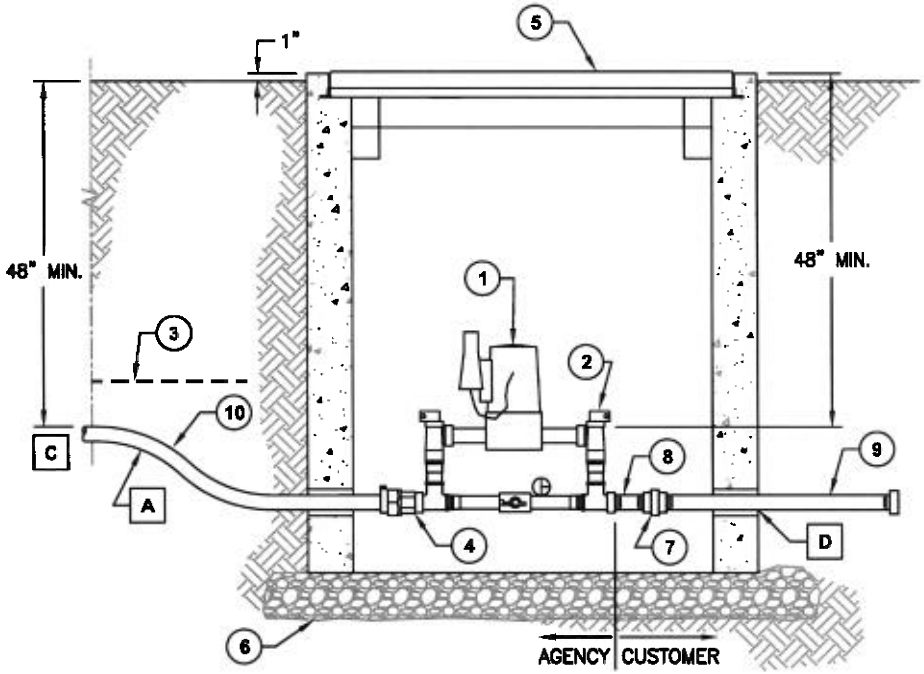

SECTION

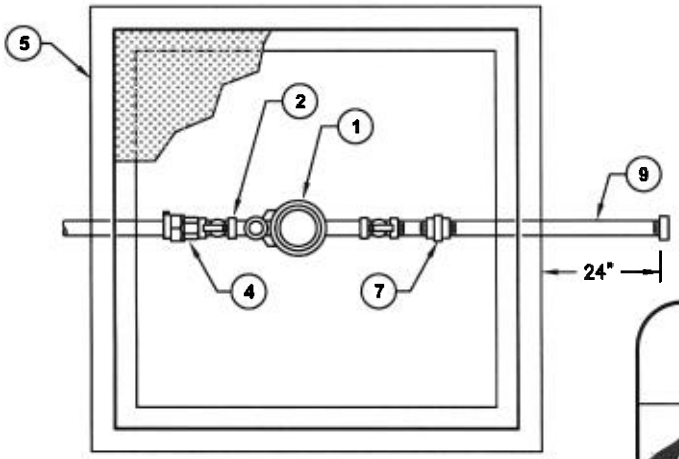

PLAN

ITEM	DESCRIPTION
1	METER AND ERT (INSTALLED BY AGENCY)
2	METER YOKE W/DUAL LOCKING ANGLE BALL VALVES AND LOCKING BYPASS SHUTOFF, SIZE PER METER
3	12" WIDE WARNING TAPE
4	2" NPTxCOMP. ADAPTER
5	PRECAST CONC. METER VAULT W/ALUMINUM, SPRING-ASSIST, LOCKABLE LID WITH DRAIN. PROVIDE MIN. 48"x48" LID OPEN AREA.
6	6" OF 3/4" CRUSHED ROCK. EXTEND 6" ON ALL SIDES
7	NPT BRASS UNION (SIZE PER METER)
8	NPT BRASS NIPPLE (SIZE PER METER)
9	NPT BRASS OR BRONZE NIPPLE WITH BRASS CAP (SIZE PER METER)
10	TYPE "K" COPPER PIPE

NOTES:

- **A** R=24" MIN., TYP.
- **B** DRAPE VAULT PIPING AND METER IN INSULATING BLANKETS.
- **C** CONSTRUCT SERVICE SADDLE, VALVE, AND VALVE BOX PER S202.
- **D** WALL PENETRATION PER S405.

AN APPROVED PRODUCTS LIST IS LOCATED IN APPENDIX E.

COLD CLIMATE SERVICE 1-1/2" TO 2" METER

PCWA

APPROVED: Brian C. Martin (d)
BRIAN C. MARTIN, P.E.
DIRECTOR OF TECHNICAL SERVICES

DRAWING NO. S503

REVISION NO. 0

DATE: 09/03/10

ITEM	DESCRIPTION
1	RESTRAINED DIP SIZED PER HEAD LOSS REQUIREMENTS
2	6" OF 3/4" CRUSHED ROCK. EXTEND 6" ON ALL SIDES
3	MJ 90° ELBOW
4	PE DIP
5	LOCKING-LID VALVE BOX PER S106
6	MJxFLGxFLG TEE
7	FLG GATE VALVE
8	SLEEVED PENETRATION PER S405, TYP.
9	FLG ECC. REDUCER FLAT SIDE UP (3" METER INSTALLATION)
10	PRECAST CONC. VAULT W/ALUMINUM, SPRING-ASSIST, LOCKABLE LID WITH DRAIN. PROVIDE MIN. 48"x48" LID.
11	FLG SPOOL (MATCH METER SIZE)
12	BRONZE PLATE STRAINER (MATCH METER SIZE)
13	RESTRAINED FLANGED COUPLING ADAPTER 2 EA. REQUIRED FOR 4" METER AND ABOVE (MATCH METER SIZE)
14	LOCATING WIRE PER S109
15	3/4" NPT BRASS PIPING
16	3/4" NPT BRASS STREET ELBOW
17	3/4" BRASS OR BRONZE HOSE BIB AND CAP
18	3/4" BRONZE SADDLE
19	METER BYPASS. MATCH SERVICE SIZE, 4" MIN.
20	FINISHED GRADE
21	FLGxPE SPOOL
22	NON-LOCKING LID

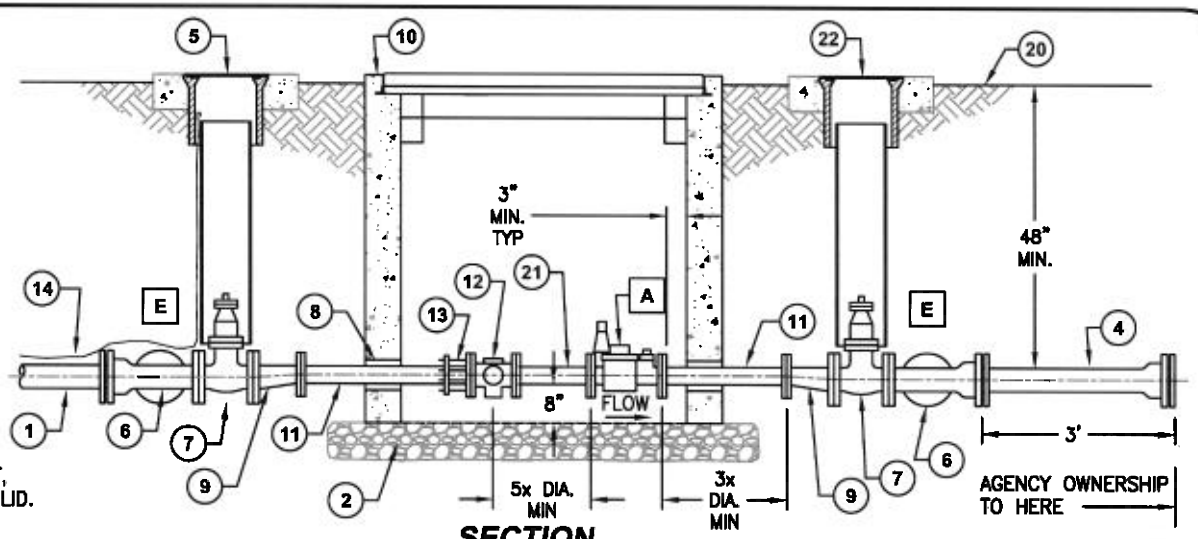

SECTION

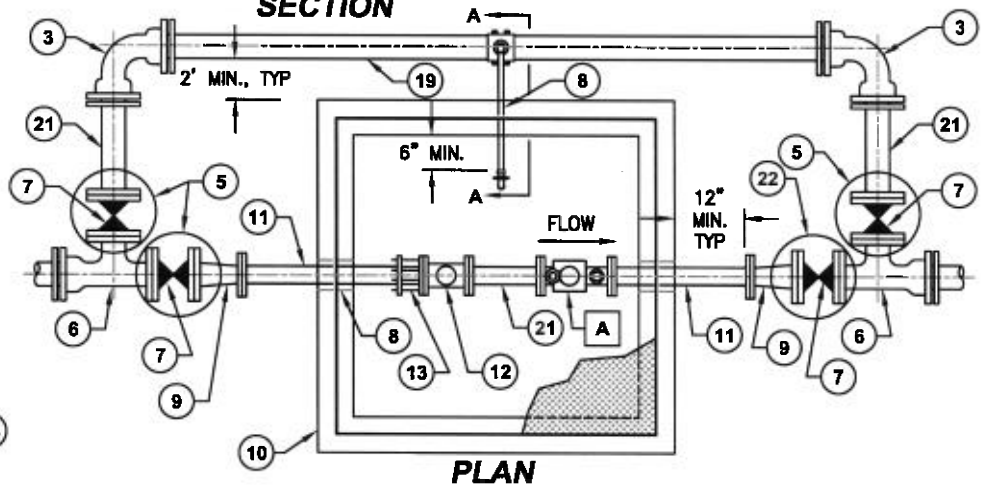

PLAN

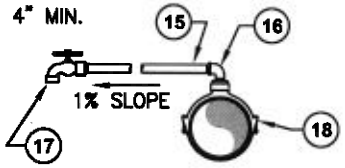

SECTION A-A

NOTES:

A	AGENCY TO SUPPLY METER AND ERT.
B	RESTRAIN ALL MJ JOINTS.
C	3" METER CONFIGURATION SHOWN. 4" AND LARGER METERS REQUIRE SEPARATE VAULTS FOR STRAINER AND METER.
D	DRAPE VAULT PIPING AND APPURTENANCES IN INSULATING BLANKETS.
E	VALVE BOX NOT SHOWN FOR CLARITY.

AN APPROVED PRODUCTS LIST IS LOCATED IN APPENDIX E.

COLD CLIMATE SERVICE 3" METER & LARGER

PCWA

APPROVED: Brian C. Martin (d)
BRIAN C. MARTIN, P.E.
DIRECTOR OF TECHNICAL SERVICES

DRAWING NO. S504

REVISION NO. 0

DATE: 09/03/10

ITEM	DESCRIPTION
1	CONCRETE THRUST BLOCK W/4.0 S.F. BEARING AREA (KEEP WEEP HOLE CLEAR)
2	DRY BARREL FIRE HYDRANT AS REQUIRED BY FIRE DISTRICT AND AGENCY
3	#4 REBAR IN 2' SQUARE WITH 1' OVERLAP, OR 4"x4" #10x#10 WELDED WIRE FABRIC CUT TO FIT
4	WRAP HYDRANT RISER W/10 MIL TAPE IN CONTACT W/ CONC. SPLASH PAD
5	6" OF 3/4" CRUSHED ROCK. EXTEND 6" ON ALL SIDES
6	2" PVC SLEEVE FACING STREET FOR SNOW POLES, TYP OF 2
7	BREAK-OFF BOLTS W/NUTS AT BOTTOM OF HYDRANT

NOTES:

- **A** HYDRANT TO HAVE ONE 4-1/2" OUTLET TO FACE THE STREET.
- **B** IF GOVERNING AGENCY DOES NOT ALLOW SPLASH PAD AT FINISH GRADE, PLACE SPLASH PAD SURFACE 8" BELOW FINISH GRADE.
- **C** 2% SLOPE AWAY FROM FIRE HYDRANT.
- **D** SEE S105 FOR VALVE BOX INSTALLATION REQUIREMENTS.

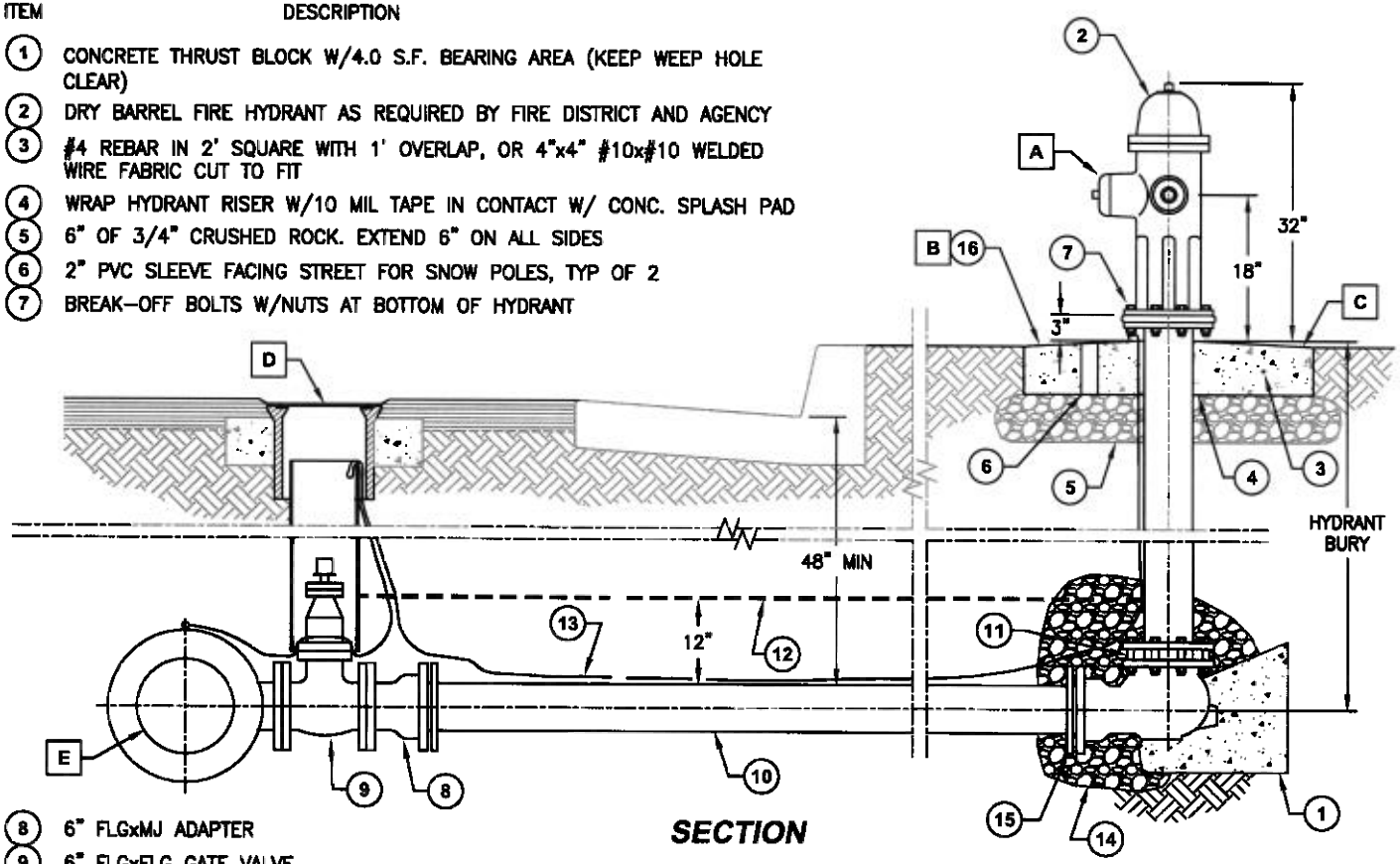

SECTION

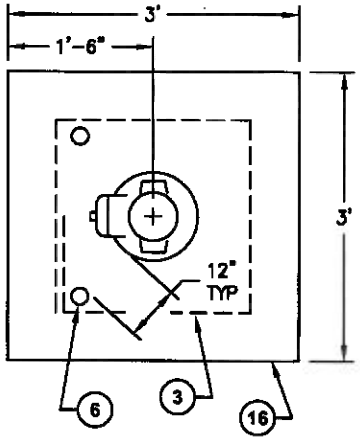

PLAN

ITEM	DESCRIPTION
8	6" FLGxMJ ADAPTER
9	6" FLGxFLG GATE VALVE
10	6" RESTRAINED DUCTILE IRON PIPE
11	WEEP HOLE
12	12" WIDE WARNING TAPE
13	LOCATING WIRE PER S109
14	4 CUBIC FEET OF 3/4" CRUSHED ROCK
15	MJ HYDRANT SHOE
16	CONCRETE SPLASH PAD

E PROVIDE 8' MIN. RESTRAINED PIPE LENGTH OF WATER MAIN EACH SIDE OF TEE.

AN APPROVED PRODUCTS LIST IS LOCATED IN APPENDIX E.

FIRE HYDRANT ASSEMBLY (DRY BARREL)

PCWA

APPROVED: Brian C. Martin (d)
BRIAN C. MARTIN, P.E.
DIRECTOR OF TECHNICAL SERVICES

DRAWING NO. S505

REVISION NO. 0

DATE: 09/03/10

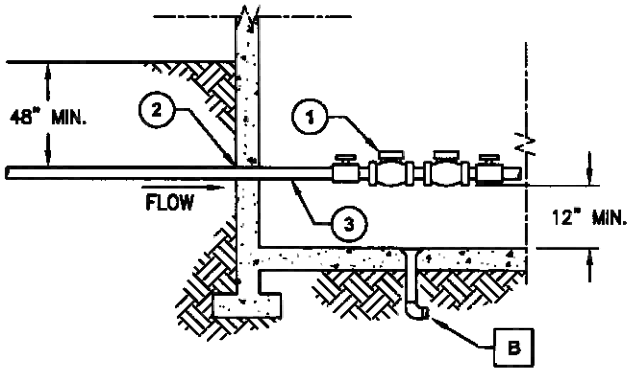

ELEVATION - IN BASEMENT

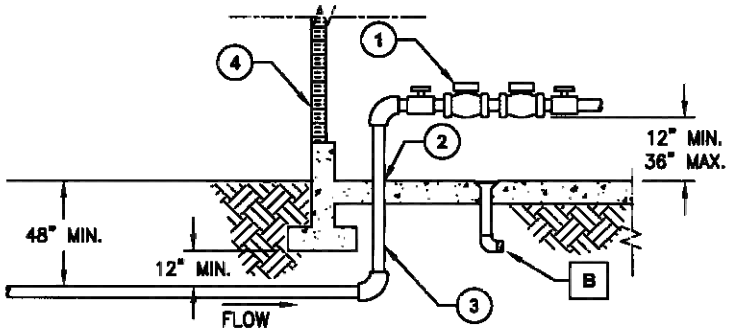

ELEVATION - IN BUILDING

ITEM	DESCRIPTION
1	INSTALL BACKFLOW PREVENTION DEVICE PER MANUFACTURER'S RECOMMENDATIONS
2	PENETRATIONS PER S405
3	PIPE SHALL BE TYPE "M" NPT COPPER, BRASS OR BRONZE, FITTINGS SHALL BE BRASS OR BRONZE.
4	INSULATED ACCESS DOOR

NOTES

A ALL PIPE AND APPURTENANCES DOWNSTREAM OF METER BOX ARE THE RESPONSIBILITY OF THE CUSTOMER.

B DRAIN REQUIRED PER CHAPTER 8 OF THE 2007 UNIFORM PLUMBING CODE.

C THIS DETAIL IS APPLICABLE TO 1" AND SMALLER COLD CLIMATE BACKFLOW PREVENTION DEVICES LOCATED WITHIN BUILDINGS OR STRUCTURES.

D PRIVIDE 12 INCHES OF CLEARANCE FROM ANY PART OF THE DEVICE.

E THE AGENCY REQUIRES ACCESS TO BACKFLOW DEVICE. SEE DIV. 2, SECT. 3.

F MUST BE NO CONNECTIONS BETWEEN THE METER AND THE BACKFLOW PREVENTION DEVICE.

AN APPROVED PRODUCTS LIST IS LOCATED IN APPENDIX E.

1" COLD CLIMATE BACKFLOW PREVENTION DEVICE

PCWA

APPROVED: Brian C. Martin (d)
BRIAN C. MARTIN, P.E.
DIRECTOR OF TECHNICAL SERVICES

DRAWING NO. S509

REVISION NO. 0

DATE: 09/03/10

SYSTEM OUTAGE REQUEST FORM

System to be Shutdown: _____

_____

_____

Date of Shutdown: _____ Beginning at _____ a.m. p.m.

Duration of Shutdown: _____ Critical Path Activity? ( ) yes ( ) no

Submittal No.	
( ) 1st Submission	( ) Re-Submittal
Spec Section	
Dwg/Detail No.	

Owner: Placer County Water Agency	**Routing**	**Date Sent**	**Date Received**
Project:	Contractor/CM		
	CM/Design Consultant		
Contractor:	CM/PCWA Operations		
Regulatory Agency Notification Required? ( ) yes ( ) no	Design Consultant/CM		
Is a Dry Run Required? ( ) yes ( ) no	PCWA Operations/CM		
Confined Space Entry? ( ) yes ( ) no	CM/Contractor		
Combustible/Hazardous Gases Present? ( ) yes ( ) no			

Describe work to be performed including detailed sequence of events, safety plan, protection of existing facilities, equipment to be used and contingency plan. Use additional sheets as necessary.

Will you require assistance from PCWA Operations? Note that all existing valves and controls shall be operated by PCWA staff only.

Outage Contact Information	**Name of Person on Call/Duty**	**Home Phone**	**Cell Phone and/or Pager**
Contractor			
Construction Manager			
PCWA Operations			
Design Consultant			

Additional Contractor Comments:

Certified by: _____
(Contractor's Signature)

CM / PCWA / Design Consultant Review Action

( ) SOR Acceptable with comments noted on attached.

( ) SOR Not Acceptable with reasons noted on attached. Re-Submittal is required.

_____ Date: _____
(Construction Manager's Signature)

PIPE TEST RECORD

Date: _____

Project Name: **I-80 Gilardi Road Bridge Pipeline**	**Project No.:**	**Contractor:**
Pipeline Size & Name:	**Pipe Type:**	**Pipe Location/Description:**
(SL), SN, IA, etc.)	*(DI, PVC, Steel, Copper, etc.)*	*(Attach sketch if needed)*
Section Tested: **From:**_____ **To:** _____	**First Test** ___ **Or** **Re-Test** ___	**Length of Pipe Tested:** ____**Ft.**

Test Specifications	**Actual Test Results**
Type of Test: _____	**Start pressure:** _____
Type of Test: _____	**End Pressure:** _____
Duration: _____	**Start time:** _____ **Stop time:** _____ **Duration:** _____
Allowable loss: _____	**Actual loss:** _____

Comments:

_____

_____

_____

_____

_____

_____

Test Passes	
Test Fails	

Tested By:

_____
Contractor

Test Witnessed By:

_____
Construction Inspector

Note: This is an "Information Handout" document to replace "Reserved" in Section 5-1.20C of Caltrans 2010 Standard Specification.

RAILROAD RELATIONS AND INSURANCE REQUIREMENTS

1.01 GENERAL

The term "Railroad" shall mean the **Union Pacific Railroad Company.**

The Contractor must not begin work on Railroad properties until June 1, 2015.

The Contractor must cooperate with Railroad to the end that the work may be handled in an efficient manner during roadway work at the following two locations:

(a) The Newcastle Underpass Railroad Crossing (Bridge #19-0103)
Interstate Route 80 at Post Mile 13.81
USDOT #753205X (CPUC #001AI-120.40-B)
Placer County (unincorporated)

(b) The Weimar Road Overcrossing (Bridge #19-0083)
Interstate Route 80 at Post Mile 29.32
USDOT #75314E (CPUC #001A-137.00-A)
Placer County (unincorporated)

At the Weimar Road Overcrossing location only, there will be no work on Railroad property. The Contractor must not damage and trespass on Railroad property adjacent to Interstate Route 80.

The Contractor must plan, schedule and conduct all work activities so as not to interfere with the movement of any trains. However, except for the additional compensation provided for hereinafter for delays in completion of specific unit of work to be performed by the Railroad, and except as provided in Public Contracts Code Section 7102, the Contractor shall have no claim for damages, extension of time, or extra compensation in the event his work is held up by railroad train operations or other work performed by the Railroad.

The Contractor must understand the Contractor's right to enter the Railroad's property is subject to the absolute right of the Railroad to cause the Contractor's work on the Railroad's property to cease if, in the opinion of the Railroad, the Contractor's activities create a hazard to the Railroad's property, employees, and operations.

The Contractor agrees to deliver to the Railroad the "Application – Right of Entry," attached hereto as Appendix 1 and to provide to the State and/or the Railroad all insurance policies, binders, certificates or endorsements that are set forth by Railroad after receipt and review of Contractor's application for right of entry for temporary use of Railroad property . Contractor shall pay the necessary

application fee issued by Railroad as part of various items of work in the Contractor's bid list and will not be compensated.

The Contractor is directed to the following website address for information and requirements by Railroad to process his right of entry application:

http://www.uprr.com/reus/rrinsure/index.shtml

In addition to the requirements set upon by the Railroad, the Contractor shall also comply with the requirements set forth below.

1.02 RAILROAD REQUIREMENTS

The Contractor shall provide to Mr. Terrel Anderson, Manager, Industry and Public Projects, 9451 Atkins Street, Roseville, CA 95747. Telephone (916) 789-5134, and the Resident Engineer, in writing, the advance notice requirements set forth in the reviewed Right of Entry Agreement Application before performing any work on, or adjacent to the property or tracks of the Railroad.

The Contractor shall cooperate with the Railroad where work is over or under the tracks, or within the limits of the Railroad property to expedite the work and avoid interference with the operation of railroad equipment.

The Contractor shall comply with the rules and regulations of the Railroad or the instructions of its representatives in relation to protecting the tracks and property of the Railroad and the traffic moving on such tracks, as well as the wires, signals and other property of the Railroad, its tenants or licensees, at and in the vicinity of the work during the period of construction. The responsibility of the Contractor for safe conduct and adequate policing and supervision of its work at the job site shall not be lessened or otherwise affected by the presence at the work site of the Railroad representatives, or by the Contractor's compliance with any requests or recommendations made by the Railroad representatives.

The Contractor shall perform work so as not to endanger or interfere with the safe operation of the tracks and property of the Railroad and traffic moving on such tracks, as well as wires, signals and other property of the Railroad, its tenants or licensees, at or in the vicinity of the work.

The Contractor shall take protective measures to keep the Railroad facilities, including track ballast, free of sand or debris resulting from his operations. Damage to the Railroad facilities resulting from the Contractor's operations will be repaired or replaced by the Railroad and the cost of such repairs or replacement shall be deducted from the Contractor's progress and final pay estimates.

The Contractor shall contact the Railroad's "Call Before You Dig" at least forty-eight (48) hours prior to commencing work, at 1-800-336-9193 during normal business hours (7:00 a.m. to 9:00 p.m. Central Time, Monday through Friday,

except holidays – also a 24-hour, 7-day number for emergency calls) to determine location of fiber optics. If a telecommunications system is buried anywhere on or near the Railroad property, the Contractor will coordinate with the Railroad and the Telecommunication Company(ies) to arrange for relocation or other protection of the system prior to beginning any work on or near Railroad property.

The Contractor shall not pile or store any materials nor park any equipment closer than 25'-0" to the centerline of the nearest track, unless directed by the Railroad's representative.

The Contractor shall also abide by the following temporary clearances during the course of construction:

- 3.66 meter (12'-0") horizontally from centerline of track
- 6.55 meter (21'-6") vertically above top of rail

The temporary vertical construction clearance above provided will not be permitted until authorized by the Public Utilities Commission. It is anticipated that authorization will be received not later than fifteen (15) days after the approval of the contract by the Attorney General. In the event authorization is not received by the time specified, and, if in the opinion of the Engineer, the Contractor's operations are delayed or interfered with by reason of authorization not being received by the said time, the Licensee will compensate the Contractor for such delay to the extent provided in Section 8-1.07, " Delays," of the 2010 Standard Specifications and not otherwise.

Walkways with railing shall be constructed by the Contractor over open excavation areas when in close proximity of tracks, and railings shall not be closer than 2.60-meter (8'-6") horizontally from centerline of the nearest track, if tangent, or 2.90-meter (9'-6") if curved.

Infringement on the above temporary construction clearances by the Contractor's operations shall be submitted to the Railroad by the Engineer, and shall not be undertaken until approved by the Railroad, and until the Engineer has obtained any necessary authorization from any governmental body or bodies having jurisdiction thereover. No extension of time or extra compensation will be allowed in the event the Contractor's work is delayed pending Railroad approval and governmental authorization.

When the temporary vertical clearance is less than 6.86-meter (22'-6") above top of rail, the Railroad shall have the option of installing tell-tales or other protective devices the Railroad deems necessary for protection of the Railroad trainmen or rail traffic.

Four (4) sets of plans, in 279mm x 432mm (11" x 17") format, and two (2) sets of calculations showing details of construction affecting the Railroad's tracks and property not included in the contract plans, including but not limited to shoring and falsework, shall be submitted to the Engineer for review prior to submittal to

the Railroad for final approval. Falsework shall comply with the Railroad guidelines. Demolition of existing structures shall comply with the Railroad guidelines. Shoring shall be designed in accordance with the Railroad's shoring requirement of Drawing No. 106613 and guidelines for shoring and falsework, latest edition, issued by the Railroad's Office of Chief Engineer. Shoring and falsework plans and calculations shall be prepared and signed by a professional engineer registered in California. This work shall not be undertaken until such time as the Railroad has given such approval, review by the Railroad may take up to six (6) weeks after receipt of necessary information.

The Contractor shall notify the Engineer in writing, at least twenty-five (25) calendar days but not more than forty (40) days in advance of the starting date of installing temporary work with less than permanent clearance at each structure site. The Contractor shall not be permitted to proceed with work across railroad tracks until this requirement has been met. No extension of time or extra compensation will be allowed if the Contractor's work is delayed due to failure to comply with the requirements in this paragraph.

Blasting will be permitted only when approved by the Railroad.

The Contractor shall, upon completion of the work covered by this Contract to be performed by the Contractor upon the premises or over or beneath the tracks of the Railroad, promptly remove from the premises of the Railroad, the Contractor's tools, implements and other materials, whether brought upon said premises and cause said premises to be left in a clean and presentable condition.

Under track pipeline installations shall be constructed in accordance with the Railroad's current standards which may be obtained from the Railroad. The general guidelines are as follows:

Edges of jacking or boring pit excavations shall be a minimum of 7.62-meter (25 feet) from the centerline of the nearest track.

If the pipe to be installed under the track is 100mm (4 inches) in diameter or less, the top of the pipe shall be at least 42 inches below base of rail.

If the pipe diameter is greater than 100-meter (4 inches) in diameter, it shall be encased and the top of the steel pipe casing shall be at least1.60-meter (66 inches) below base of rail.

Installation of pipe or conduit under the Railroad's tracks shall be done by dry bore and jack method.

Hydraulic jacking or boring will not be permitted.

Safety of personnel, property, rail operations and the public is of paramount importance. As reinforcement and in furtherance of overall safety measures to be observed by the Contractor (and not by way of limitation), the following special

safety rules shall be followed:

(a) The Contractor shall keep the job site free from safety and health hazards and ensure that its employees are competent and adequately trained in all safety and health aspects of the job. The Contractor shall have proper first aid supplies available on the job site so that prompt first aid services can be provided to any person that may be injured on the job site. The Contractor shall promptly notify the Railroad of any U.S. Occupational Safety and Health Administration reportable injuries occurring to any person that may arise during the work performed on the job site. The Contractor shall have a non-delegable duty to control its employees while they are on the job site or any other property of the Railroad to be certain they do not use, be under the influence of, or have in their possession any alcoholic beverage, drug, narcotic or other substance that may inhibit the safe performance of work by the employee.

(b) The employees of the Contractor shall be suitably dressed to perform their duties safely and in a manner that will not interfere with their vision, hearing or free use of their hands or feet. Only waist length shirts with sleeves and trousers that cover the entire leg are to be worn. If flare-legged trousers are worn, the trouser bottoms must be tied to prevent catching. The employees should wear sturdy and protective work boots and at least the following protective equipment:

(1) Protective head gear that meets American National Standard-Z89.l-latest revision. It is suggested that all hardhats be affixed with the Contractor's or the subcontractor's company logo or name.

(2) Eye protection that meets American National Standard for occupational and educational eye and face protection, Z87.1-latest revision. Additional eye protection must be provided to meet specific job situations such as welding, grinding, burning, etc.; and

(3) Hearing protection which affords enough attenuation to give protection from noise levels that will be occurring on the job site.

(4) All heavy equipment provided or leased by the Contractor shall be equipped with audible back-up warning devices. If in the opinion of the Railroad Representative any of the Contractor's or the subcontractor's equipment is unsafe for use on the Railroad's right-of-way, the Contractor, at the request of the Railroad representative, shall remove such equipment from the Railroad's right-of-way.

1.02.1 SPECIAL PROJECT REQUIREMENTS

Due to the current substandard clearances and the classification of the bridge and railroad route, the following information applies to mitigate construction risks.

(a) For excavation near bent/pier footings, the following note applies; "Where cover over bent/pier footings to the bottom of the new roadway section is less than 2', special care shall be taken during excavation to avoid any contact with the footings. Note that footings extend 5' each direction from center of pier."

(b) Contractor shall plan equipment moves prior to any work for all equipment with the potential to impact the bridge (i.e. dump trucks in dump position loading asphalt pavers, loaders and excavators with boom arms that can be extended higher than low chord of bridge, etc.) The Minimum Vertical Clearance at the Newcastle Underpass is 15 feet 3 inches.

(c) In the event of any contact with the bridge structure by construction equipment, Union Pacific Railroad shall be contacted immediately at the number provided below;

Union Pacific Railroad (UPRR) Risk Management Communications 1-888-877-7267 (24-hr access)

Reference the Newcastle Underpass at MP 120.54, Roseville Subdivision, Newcastle, CA and contact the Manager of Bridge Maintenance

1.03 PROTECTION OF RAILROAD FACILITIES

Upon the advance notification provided to the Railroad as set forth in Section 1 of Exhibit A of the Contractor's Right of Entry Agreement, the Railroad representatives, conductors, flagmen or watchmen will be provided by the Railroad to protect its facilities, property and movements of its trains or engines. Notice shall be made to Mike Upton, MTM, of Railroad at (559) 240-3734. At the time of notification, the Contractor shall provide the Railroad with a schedule of dates that flagging services will be needed, as well as times, if outside normal working hours. Subsequent deviation from the schedule shall require ten (10) working days' advance notice from the first affected date. The Railroad will furnish such personnel or other protective devices:

(a) When equipment is standing or being operated within 25 feet, measured horizontally, from centerline of any track on which trains may operate, or when any erection or construction activities are in progress within such limits, regardless of elevation above or below track.

(b) For any excavation below elevation of track subgrade if, in the opinion of the Railroad's representative, track or other Railroad facilities may be subject to settlement or movement.

(c) During any clearing, grubbing, grading or blasting in proximity to the Railroad which, in the opinion of the Railroad's representative, may endanger the Railroad facilities or operations.

(d) During any of the Contractor's operations when, in the opinion of the Railroad's representatives, the Railroad facilities, including, but not limited to, tracks, buildings, signals, wire lines or pipe lines, may be endangered.

The cost of flagging and inspection provided by the Railroad during the period of constructing that portion of the project located on or near the Railroad property, as deemed necessary for the protection of the Railroad's facilities and trains, will be borne by the State. The Railroad has indicated that its estimated flagging rate will be around One Thousand Two Hundred Dollars ($1,200.00) per day and that the Railroad has estimated a total of one hundred twenty (120) days of flagging. The State shall pay the Railroad for all actual flagging costs incurred by the Railroad under this Project through a separate Service Contract between State and Railroad that is not part of this Contract.

1.04 WORK BY RAILROAD

The following work by the Railroad will be performed by Railroad forces and is not a part of the work under this Contract.

(a) The Railroad will perform preliminary engineering and inspection (if any) and flagging as specified in Section 1.03 "Protection of Railroad Facilities," of these special provisions.

(b) Underground railroad communication line in vicinity of proposed Structure.

(c) Remove advertising signboards and signboard appurtenances.

(d) Temporary crossings at grade over tracks of Railroad for the purpose of hauling earth, rock, paving or other materials will not be permitted. If the Contractor, for the purpose of constructing highway-railway grade separation structures, including construction ramps thereto, desires to move equipment or materials across Railroad's tracks, the Contractor shall first obtain permission from Railroad via the State Engineer. Should Railroad approve the temporary crossing, State shall execute a Service Contract with Railroad for Railroad to construct the temporary crossing. Under the Service Contract, State shall bear the cost of the crossing surface, warning devices and other components that might be required. Notwithstanding State's Service Contract with Railroad, the Contractor is required to execute Railroad's form of Contractor's Haul Road Crossing Agreement. Railroad, at State's expense, shall provide flagmen to control movements of vehicles across the temporary crossing. State and its Contractor shall prevent the use of such temporary crossing by unauthorized persons and vehicles.

1.05 DELAYS DUE TO WORK BY RAILROAD.

If delays due to work by the Railroad occur, and the Contractor sustains loss which, in the opinion of the Engineer, could not have been avoided by the judicious handling of forces, equipment and plant, the amount of said loss shall be determined as provided in Section 8-1.07, " Delays," of the 2010 Standard Specifications.

If a delay due to work by the Railroad occurs, an extension of time determined pursuant to the provisions in Section 8-1.10, "Liquidated Damages," of the 2010 Standard Specifications will be granted.

1.06 LEGAL RELATIONS

The provisions of Section 1, "Relations with Railroad Company," and the provisions of Section 2, "Railroad Protective Insurance," of these special provisions shall inure directly to the benefit of the Railroad.

2.01 RAILROAD PROTECTIVE INSURANCE

In addition to any other form of insurance or bonds required under the terms of the contract and specifications, the Contractor will be required to carry insurance as set forth by Railroad upon its review of the Contractor's application for right of entry for temporary use of Railroad property.

Full compensation for all premiums which the Contractor is required to pay on all the insurance required by Railroad r shall be considered as included in the prices paid for the various items of work to be performed under the contract, and no additional allowance will be made thereof or for additional premiums which may be required by extensions of the policies of insurance.

APPLICATION – RIGHT OF ENTRY

(Please allow 30-45 days for processing)

1. Name of Licensee_____
(Exact Name of the Owner of the Utility)

State of Incorporation _____; if not incorporated, please list entity's legal status

_____

2. Address, email, phone and Fax number of Licensee

_____

Email_____Phone_____Fax_____

3. Name, address and phone number of individual to whom agreement is to be mailed ***if different than Item 2.***

_____

_____

4. Contact information for individual to contact in the event of questions.

_____

Email_____Phone_____Fax_____

5. Project site location:

_____
(City, County and State)

6. Railroad site location information:

_____
(Railroad Mile Post, Subdivision, or any other pertinent location detail.)

7. Time period for your project use of Railroad Company's property:

Start Date:_____ Stop Date:_____

8. Will there be any activity or equipment within 25 feet of a Railroad track in connection with this property?

( ) No ( ) Yes *(If Yes, a Flagman will be required on site at your cost.)*

9. Will there be any excavation involved?

   ( ) No ( ) Yes *(If Yes, include shoring plans within Railroad standards.)*

10. Purpose of your request:
    (This must be detailed & complete; attach engineering plans, shoring plans and any pertinent supporting details, including maps or prints.)

    _____

    _____

    _____

- Additional Fees and charges may be applicable to your request. These changes cannot be determined until your project is approved.

Send to:

UNION PACIFIC RAILROAD
Real Estate Department
1400 DOUGLAS STREET MS 1690
OMAHA NE 68179-1690
Attn: Mr. Paul G. Farrell,
Senior Manager-Contracts

alteration. **Upon request from the Railroad, a certified duplicate original of any required policy shall be furnished.**

J. Any insurance policy shall be written by a reputable insurance company acceptable to the Railroad or with a current Best's Insurance Guide Rating of A- and Class VII or better, and authorized to do business in the State of California.

K. The Contractor **WARRANTS** that this Agreement has been thoroughly reviewed by the Contractor's insurance agent(s)/broker(s), who have been instructed by the Contractor to procure the insurance coverage required by this Agreement and acknowledges that the Contractor's insurance coverage will be primary.

L. If the Contractor fails to procure and maintain insurance as required, the Railroad may elect to do so at the cost of the Contractor plus a 25% administration fee.

M. The fact that insurance is obtained by the Contractor the or Railroad on behalf of the Contractor shall not be deemed to release or diminish the liability of the Contractor, including, without limitation, liability under the indemnity provisions of this Agreement. Damages recoverable by the Railroad shall not be limited by the amount of the required insurance coverage.

APPENDIX 1

CONTRACTOR'S ENDORSEMENT

A. As a condition to entering upon the Railroad's right-of-way to perform Work pursuant to this agreement, State's contractor, _____
(*Name of Contractor)*
whose address is _____,
(C*ontractor's Mailing Address)*
(hereinafter "Contractor"), agrees to comply with and be bound by all the terms and provisions of the attached Caltrans Right of Entry Agreement that was signed by Union Pacific Railroad Company ("Railroad") and the State of California, Department of Transportation ("State") relating to the Work to be performed and the insurance requirements set forth in Exhibit B of the Right of Entry Agreement. The Contractor further acknowledges and agrees that the reference to Cal. Gov. Code §14662.5 in Sections 5.b) and 8.b) of Exhibit A to the Right of Entry Agreement does not apply to the Contractor and in no way limits the indemnities set forth in those provisions, to which the Contractor agrees to be bound.

B. Before the Contractor commences any Work, the Contractor will provide the Railroad with (i) a binder of insurance for the Railroad Protective Liability Insurance described in Section 2.01 of the Contract Special Provisions, hereto attached, and the original policy, or a certified duplicate original policy when available, and (ii) a certificate issued by its insurance carrier providing the other insurance coverage and endorsements required pursuant to Section 2.01 of the Contract Special Provisions.

C. All insurance correspondence, binders or originals shall be directed to:

Union Pacific Railroad Company
Attn: Real Estate Department
1400 Douglas Street, MS 1690
Omaha, Nebraska 68179-1690
Attn.: Senior Manager - Contracts
Folder No.

D. Please note that fiber optic cable may be buried on the Railroad's property. **Prior to commencing any work, the Contractor agrees to contact the Railroad's Telecommunications Operation Center as provided in Section 5 of Exhibit A of the Right of Entry Agreement to determine if any fiber optic cable is located on the Railroad's property on or near the location where the work is to be performed.** If there is, the Contractor must comply with the terms and conditions of Section 5 of Exhibit A before commencing any work on the Railroad's property.

E. **The Contractor agrees to also provide to the Railroad's Manager-Track Maintenance at ( ) ___-____** the advance notice required in Section 1 of Exhibit A of

the Right of Entry Agreement prior to working on the Railroad's property in order for the Railroad to coordinate the Contractor's work with the Railroad's operations and to make arrangements for flagging protection (if applicable).

This endorsement shall be completed and sent to the person named in Paragraph C above.

_____
(Name of Contractor)

By_____

Title:_____

BRIDGE DEPARTMENT

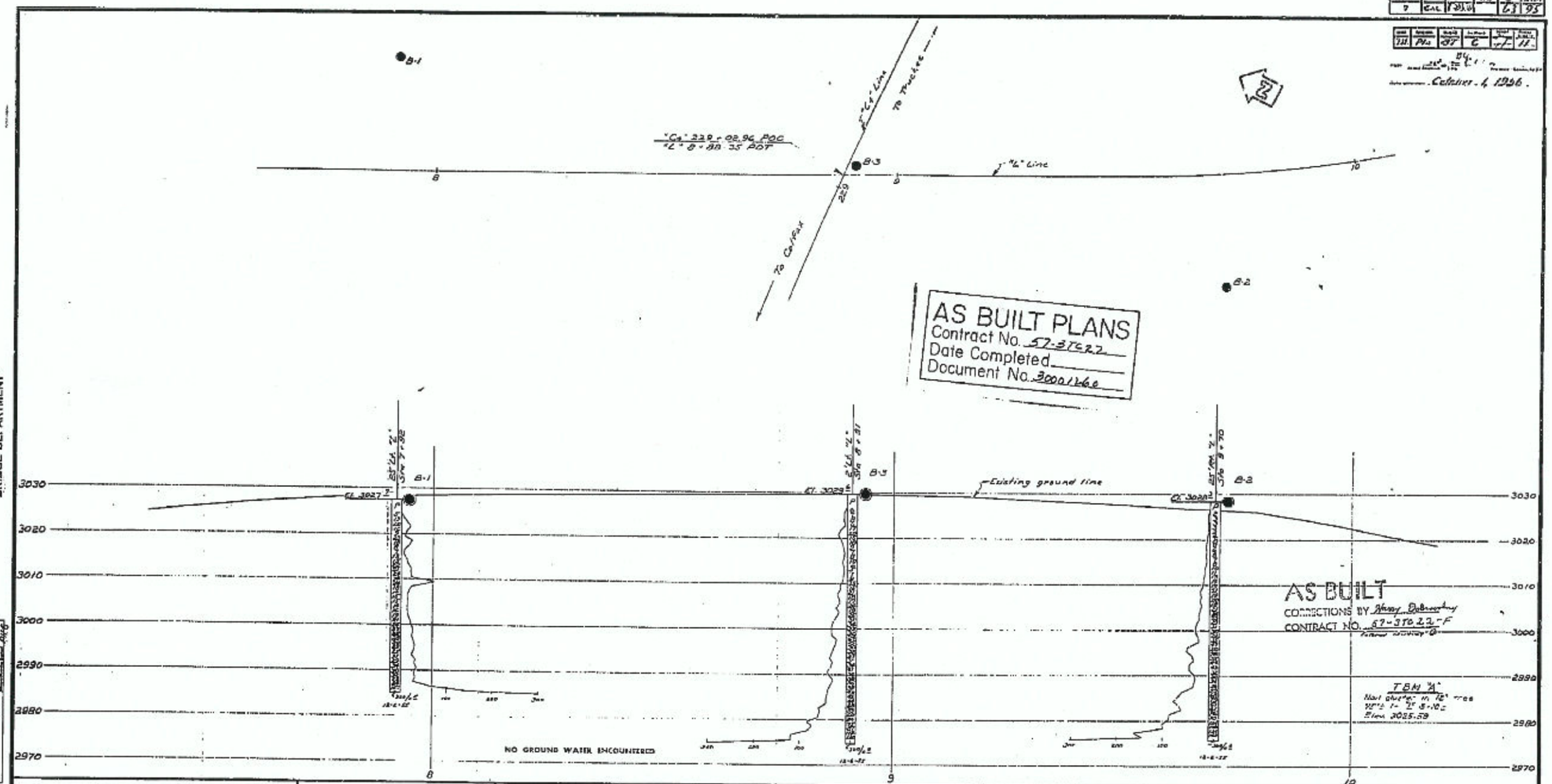

Classification of Material Based on Standard Grade Size Limits

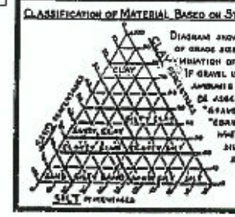

Diagram showing the basis for estimates of grade size distribution used in determination of class names.
If gravel is present in appreciable amounts the term "gravelly" may be added to the class name, viz. "gravelly sand". The terms "coarse", "medium" and "fine" when used to describe sand, silt and gravel refer to standard grade size limits.

Legend of Earth Materials

- Gravel
- Sand
- Silt
- Clay
- Sandy Clay or Clayey Sand
- Sandy Silt or Silty Sand
- Silty Clay or Clayey Silt
- Peat and/or Organic Matter
- Fill Material
- Igneous Rock
- Sedimentary Rock
- Metamorphic Rock

Legend of Boring Operations

- Plan of any boring
- Penetrometer
- 2½" Cone Penetrometer
- Sampler boring (dry)
- Rotary boring (wet)
- Auger boring (dry)
- Jet boring
- Core boring
- Test pit

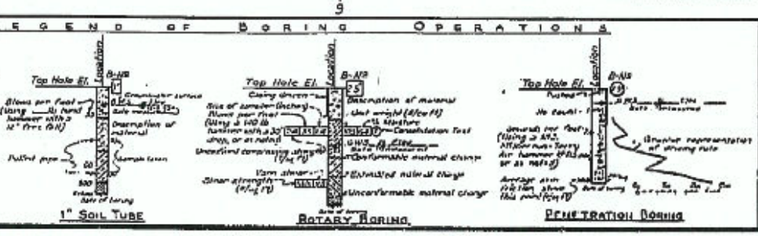

Notes

The contractor's attention is directed to Section 3, Article (c) of the Standard Specifications and to the Special Provisions accompanying this set of plans.
Classification of earth material as shown on this sheet is based upon field inspection and is not to be construed to imply mechanical analysis.

Magra Overcrossing

Log of Test Borings

Scale 1" = 10' | Bridge 19-92 | File | Drawing CE 4790

63

I HEREBY CERTIFY THAT THIS IS A TRUE AND ACCURATE COPY OF THE ABOVE DOCUMENT THAT WAS PREPARED UNDER MY DIRECTION AND CONTROL ON THIS DATE IN SACRAMENTO, CALIFORNIA PURSUANT TO AUTHORIZATION BY THE DIRECTOR OF PUBLIC WORKS.

DATE _____ SIGNATURE _____ TITLE _____

ClibPDF - www.fastio.com

BRIDGE DEPARTMENT

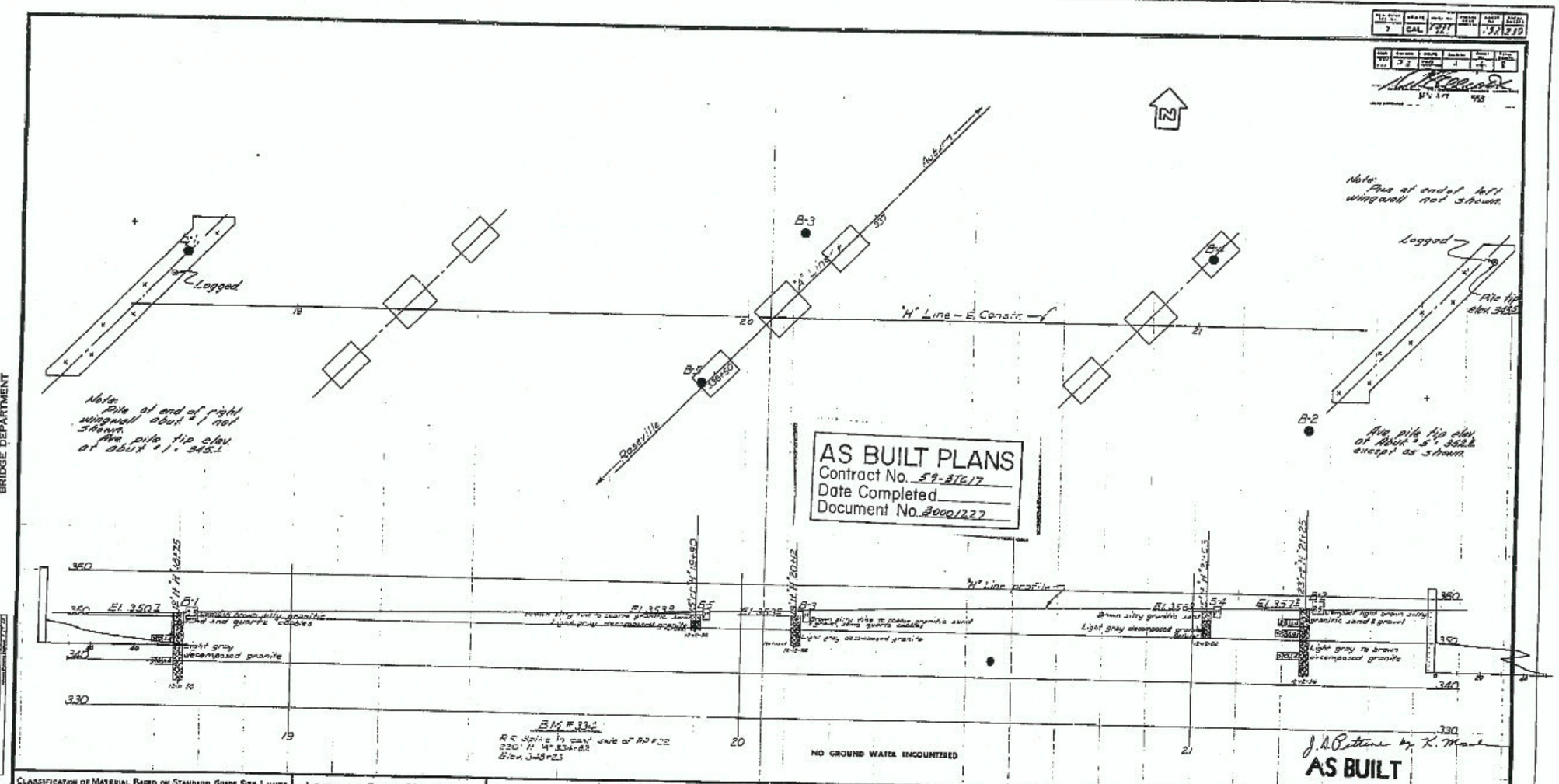

Classification of Material Based on Standard Grade Size Limits

Diagram showing the basis for estimates of grade size distribution used in determination of class names. If gravel is present in appreciable amounts the term "gravelly" may be added to the class name, viz. "gravelly sand." The terms "coarse," "medium" and "fine" when used to describing sand, silt and gravel, refer to standard grade size limits.

Legend of Earth Materials

- Gravel
- Sand
- Silt
- Clay
- Sandy Clay or Clayey Sand
- Sandy Silt or Silty Sand
- Silty Clay or Clayey Silt
- Peat and/or Organic Matter
- Fill Material
- Igneous Rock
- Sedimentary Rock
- Metamorphic Rock

Legend of Boring Operations

- Plan of any boring
- Penetrometer
- 2½" Cone Penetrometer
- Sampler boring (dry)
- Rotary boring (wet)
- Auger boring (dry)
- Jet boring
- Core boring
- Test pit

1" Soil Tube — Rotary Boring — Penetration Boring

Notes

The contractor's attention is directed to Section 2, Article (b) of the Standard Specifications and to the Special Provisions accompanying this set of plans.

Classification of earth material as shown on this sheet is based upon field inspection and is not to be construed to imply analytical analysis.

State of California
Department of Public Works
Division of Highways

BRACE
Parsons Road Overcrossing

LOG OF TEST BORINGS

Scale 1" = 10' | Bridge 19-96 | File | Drawing C-5026-B

P.R.L. Drawing No. F-302 C

152

I HEREBY CERTIFY THAT THIS IS A TRUE AND ACCURATE COPY OF THE ABOVE DOCUMENT TAKEN UNDER MY DIRECTION AND CONTROL ON THIS DATE IN SACRAMENTO, CALIFORNIA PURSUANT TO AUTHORIZATION BY THE DIRECTOR OF PUBLIC WORKS.

DATE 11. 3, 1971 SIGNATURE [illegible] TITLE [illegible]

ClibPDF - www.fastio.com

BRIDGE DEPARTMENT

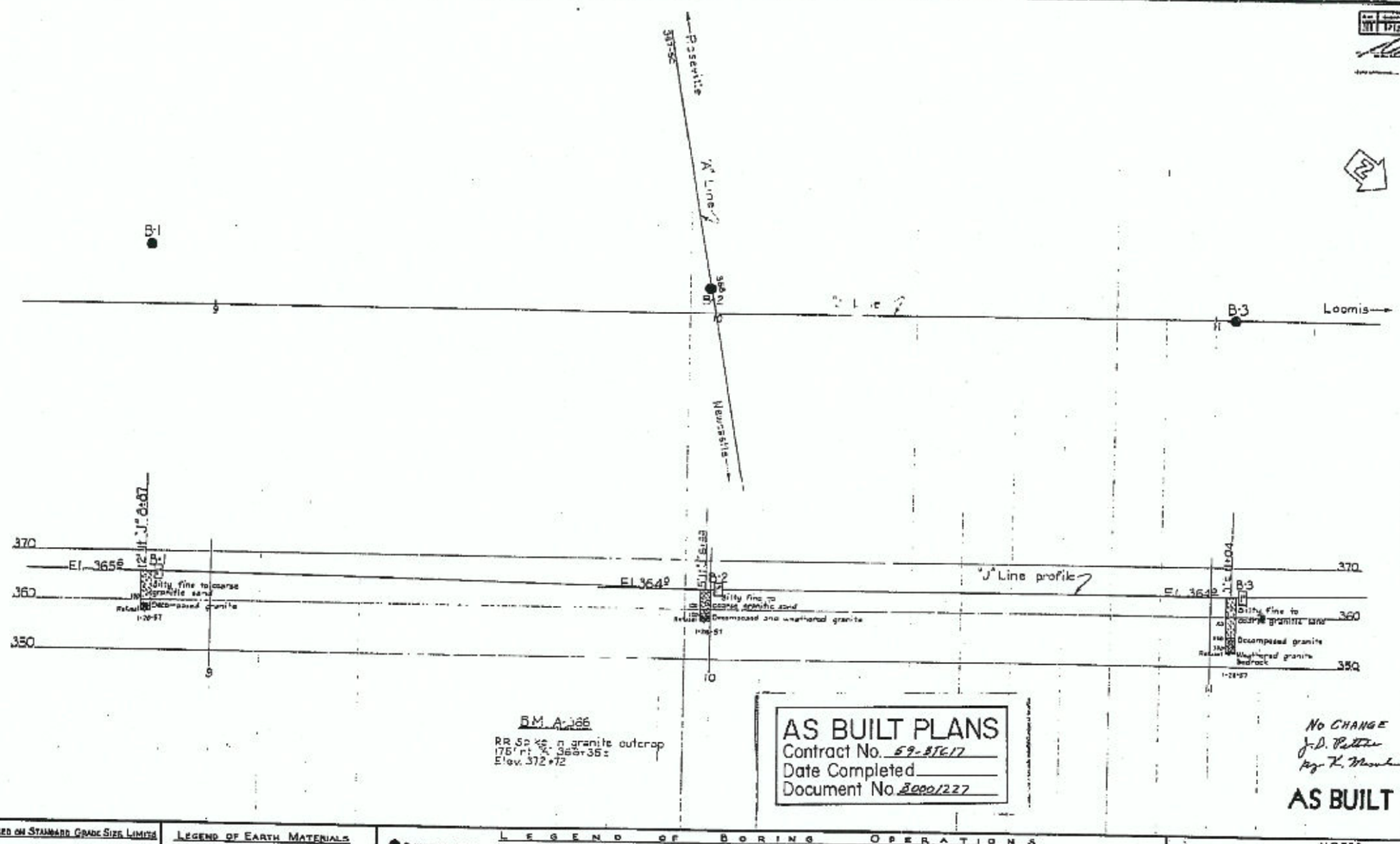

Classification of Material Based on Standard Grade Size Limits

Diagram showing the basis for estimates of grade size distribution used in determination of class names.

If gravel is present in appreciable amounts the term "gravelly" may be added to the class name, viz. "gravelly sand." The terms "coarse", "medium" and "fine" when used to describe sand, silt and gravel, refer to standard grade size limits.

Legend of Earth Materials

- Gravel
- Sand
- Silt
- Clay
- Sandy Clay or Clayey Sand
- Sandy Silt or Silty Sand
- Silty Clay or Clayey Silt
- Peat and/or Organic Matter
- Fill Material
- Igneous Rock
- Sedimentary Rock
- Metamorphic Rock

Legend of Boring Operations

- Plan of any boring
- Penetrometer
- 2½" Core Penetrometer
- Sampler boring (dry)
- Rotary boring (wet)
- Auger boring (dry)
- Jet boring
- Core boring
- Test pit

1" Soil Tube — Rotary Boring — Penetration Boring

Notes

The contractor's attention is directed to Section 2, Article (c) of the Standard Specifications and to the Special Provisions accompanying this set of plans.

Classification of earth material as shown on this sheet is based upon field inspection and is not to be construed to imply mechanical analysis.

State of California
Department of Public Works
Division of Highways

~~HIGH~~ ROAD CROSSING
HORSHOE

LOG OF TEST BORINGS

Scale 1" = 10' | Date 19-57 | File | Drawing C-5027-B

160

I HEREBY CERTIFY THAT THIS IS A TRUE AND ACCURATE COPY OF THE LOGS DOCUMENTS TAKEN UNDER MY DIRECTION AND CONTROL ON THIS DATE IN SACRAMENTO, CALIFORNIA PURSUANT TO AUTHORIZATION BY THE DIRECTOR OF PUBLIC WORKS.

DATE M. 3, 1971 SIGNATURE

ClibPDF - www.fastio.com

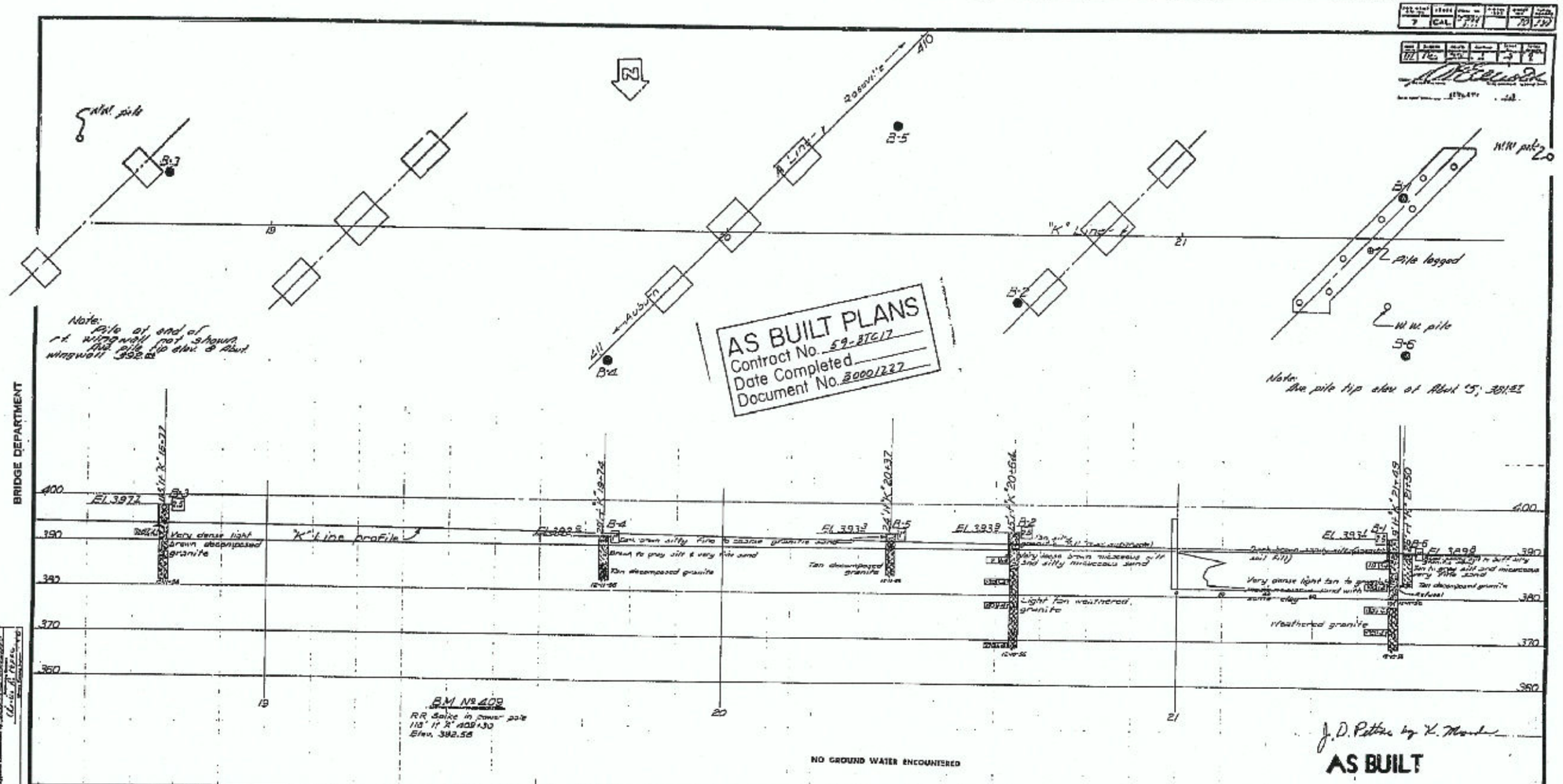

170

I HEREBY CERTIFY THAT THIS IS A TRUE AND ACCURATE COPY OF THE ABOVE DOCUMENT TAKEN UNDER MY DIRECTION AND CONTROL ON THIS DATE IN SACRAMENTO, CALIFORNIA PURSUANT TO AUTHORIZATION BY THE DIRECTOR OF PUBLIC WORKS.

DATE 11. 3, 1971 SIGNATURE [illegible] TITLE [illegible]

ClibPDF - www.fastio.com

BRIDGE DEPARTMENT

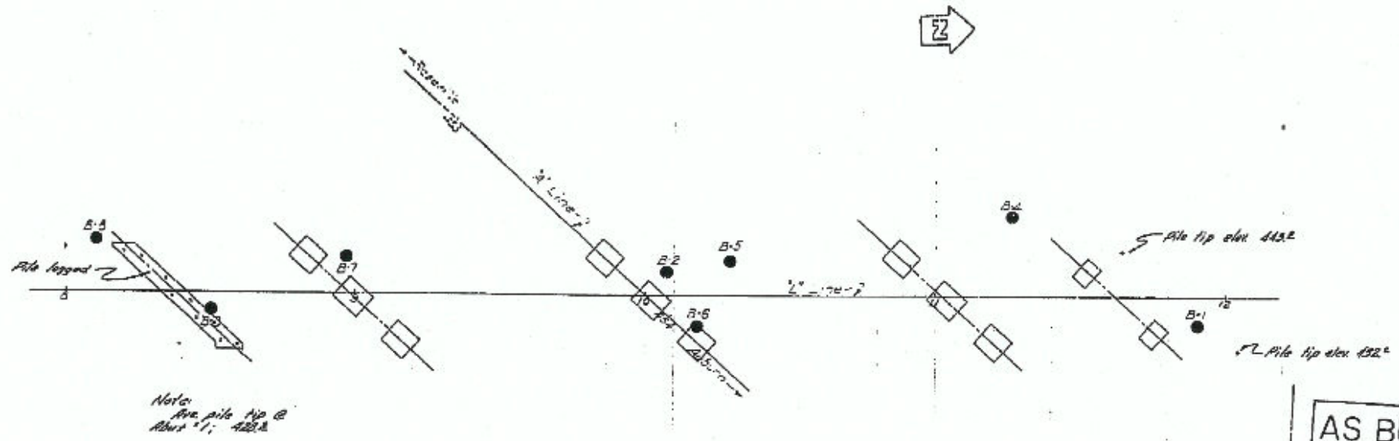

AS BUILT PLANS
Contract No. 59-37617
Date Completed
Document No. 3000/227

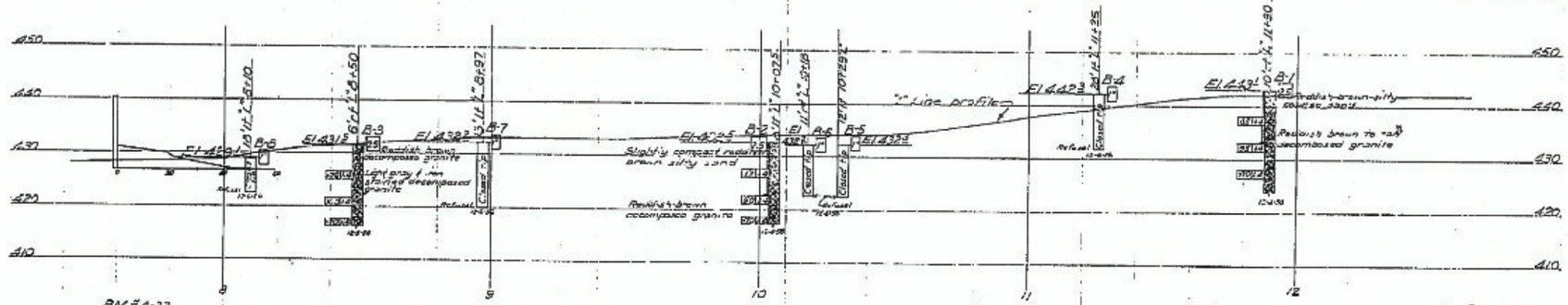

NO GROUND WATER ENCOUNTERED

J. D. Pettes by K. Moulton

AS BUILT

Classification of Material Based on Standard Grain Size Limits

Diagram showing the basis for estimates of grain size distribution used in determination of class names. If gravel is present in appreciable amounts the term "gravelly" may be added to the class name, viz. "gravelly sand". The terms "coarse," "medium" and "fine" when used to describe sand, silt and gravel, refer to standard grain size limits.

Legend of Earth Materials

Gravel; Sand; Silt; Clay; Sandy Clay or Clayey Sand; Sandy Silt or Silty Sand; Silty Clay or Clayey Silt; Peat and/or Organic Matter; Fill Material; Igneous Rock; Sedimentary Rock; Metamorphic Rock

Legend of Boring Operations

Plan of any boring; Penetrometer; 2½" Cone Penetrometer; Sampler boring (DRY); Rotary boring (WET); Auger boring (DRY); Jet boring; Core boring; Test pit

1" Soil Tube; Rotary Boring; Penetration Boring

NOTES

The contractor's attention is directed to Section 2, Article (c) of the Standard Specifications and to the Special Provisions accompanying this set of plans.

Classification of earth materials shown on this sheet is based upon field inspection and is not to be construed to imply mechanical analysis.

PENRYN ~~[illegible]~~ FLAT OVERCROSSING

PENRYN

LOG OF TEST BORINGS

Scale: Horz. 1"=20', Vert. 1"=5' | Bridge: 41-99 | Fed. | Drawing: C-5029-8

178

I HEREBY CERTIFY THAT THIS IS A TRUE AND ACCURATE COPY OF THE LAST DOCUMENT TAKEN UNDER MY DIRECTION AND CONTROL ON THIS DATE IN SACRAMENTO, CALIFORNIA PURSUANT TO AUTHORIZATION BY THE DIRECTOR OF PUBLIC WORKS.

DATE Mr. 3 1971 SIGNATURE [illegible] TITLE [illegible]

ClibPDF - www.fastio.com

BRIDGE DEPARTMENT

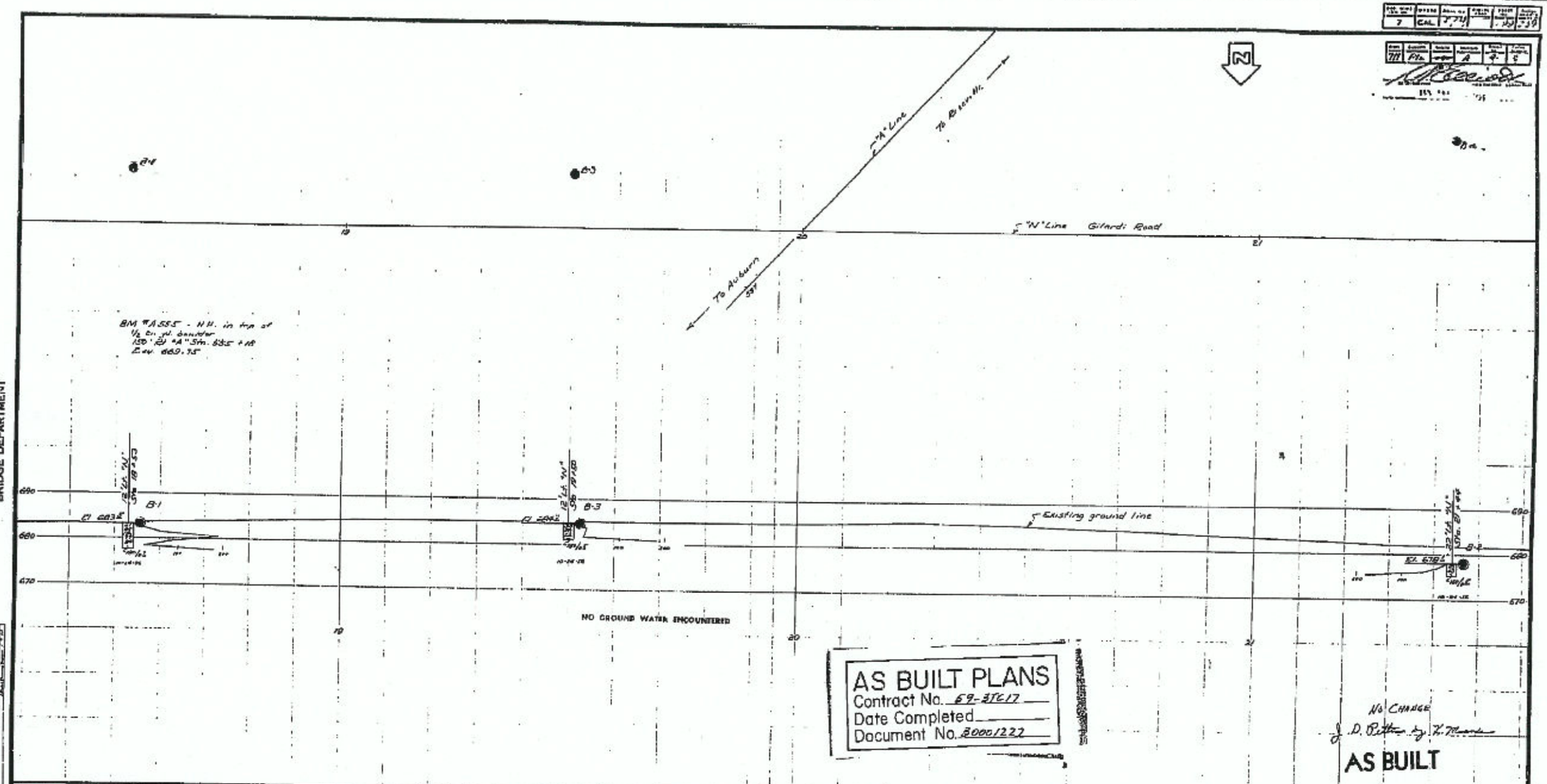

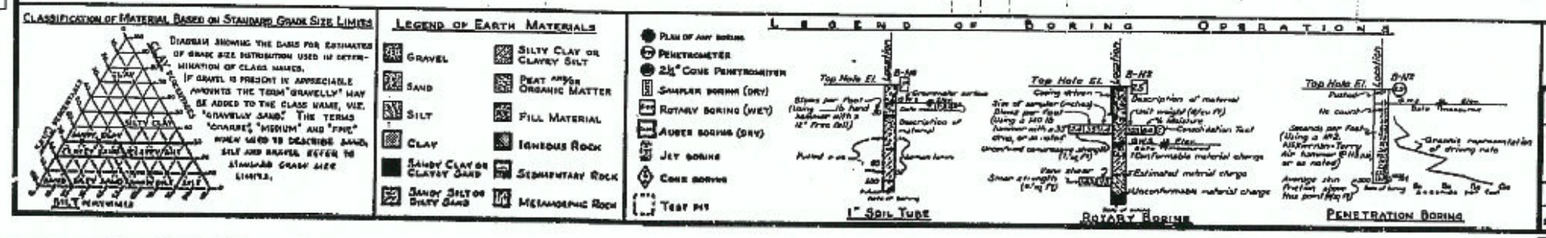

NOTES

The contractor's attention is directed to Section 7, Article (c) of the Standard Specifications and to the Special Provisions accompanying this set of plans.

Classification of earth material as shown on this sheet is based upon field inspection and is not to be construed to imply mechanical analysis.

STATE OF CALIFORNIA
DEPARTMENT OF PUBLIC WORKS
DIVISION OF HIGHWAYS

GILARDI ROAD OVERCROSSING

LOG OF TEST BORINGS

SCALE 1" = 10' | SHEET 19-101 | FILE | DRAWING C-5031-B

FILE DRAWING No. 2551/16

199

I HEREBY CERTIFY THAT THIS IS A TRUE AND ACCURATE COPY OF THE ABOVE DOCUMENT TAKEN UNDER MY DIRECTION AND SUPERVISION ON THIS DATE IN SACRAMENTO, CALIFORNIA PURSUANT TO AUTHORIZATION BY THE DIRECTOR OF PUBLIC WORKS.

DATE 10. 3 1971 SIGNATURE [illegible] TITLE Highway Division Staff Officer

ClibPDF - www.fastio.com

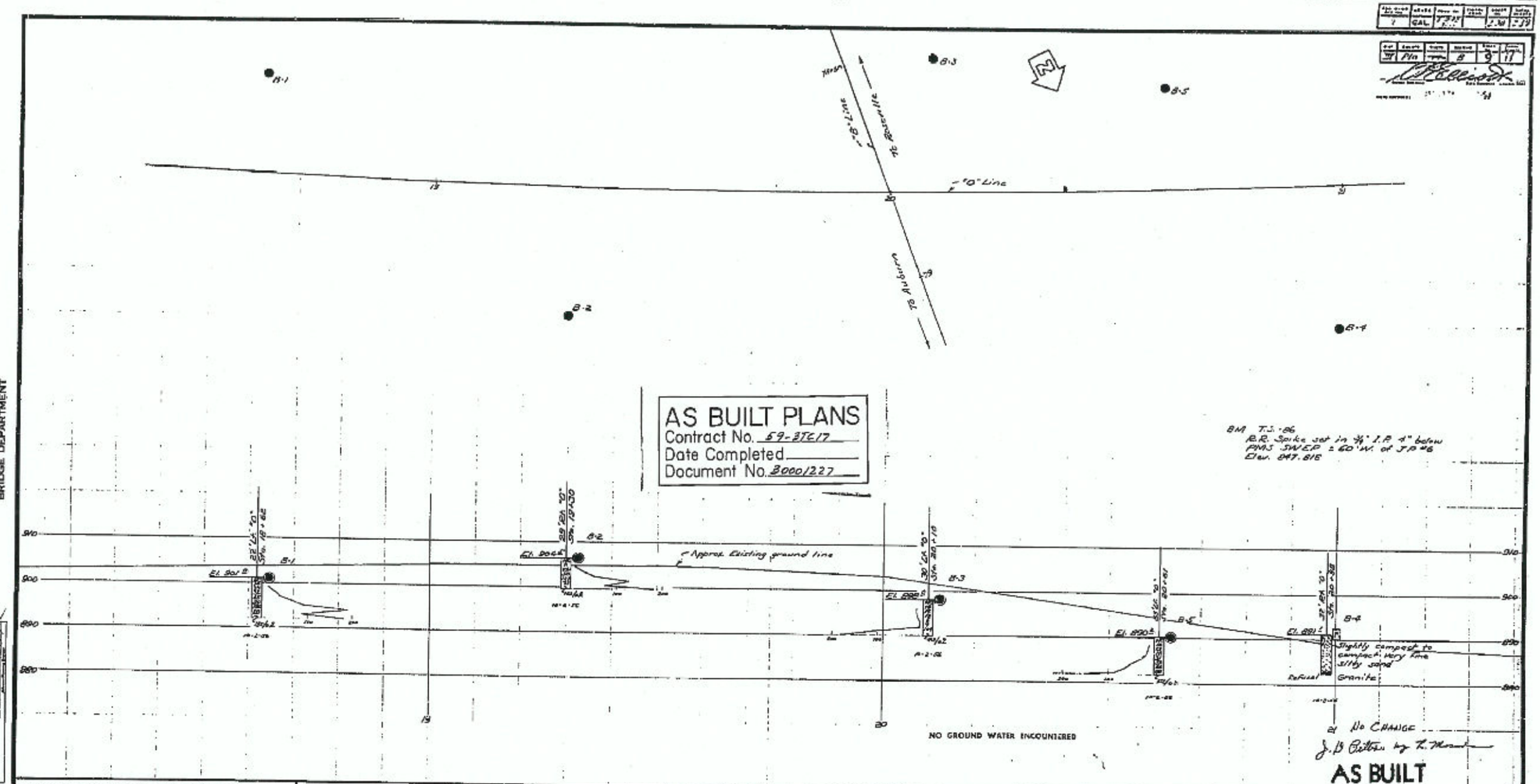

ClibPDF - www.fastio.com

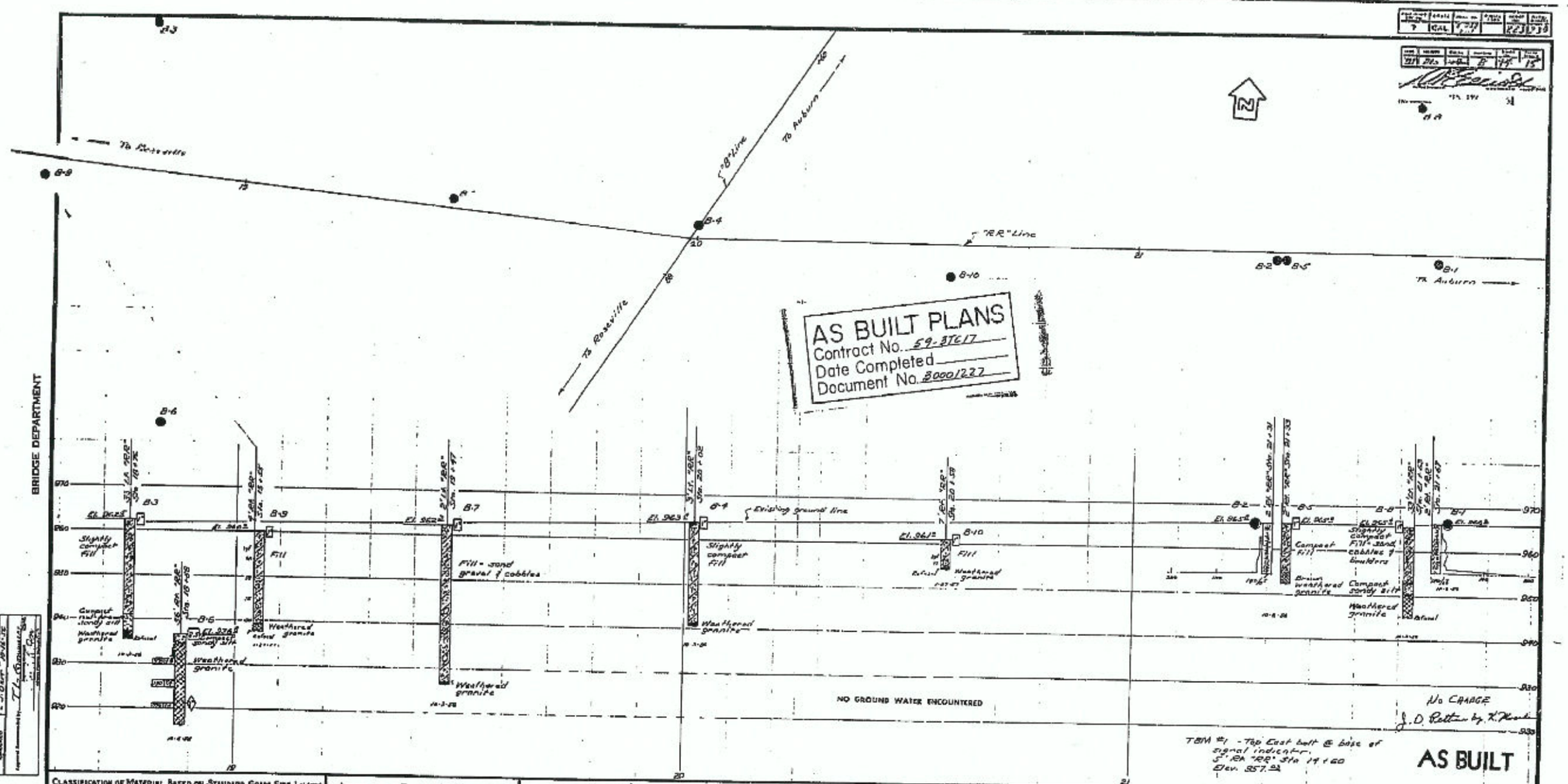

Classification of Material Based on Standard Grade Size Limits

Diagram showing the basis for estimates of grade size distribution used in determination of class names.

If gravel is present in appreciable amounts the term "gravelly" may be added to the class name, viz. "gravelly sand." The terms "coarse," "medium" and "fine" when used to describe sand, silt and gravel refer to standard grade size limits.

Legend of Earth Materials

- Gravel
- Sand
- Silt
- Clay
- Sandy Clay or Clayey Sand
- Sandy Silt or Silty Sand
- Silty Clay or Clayey Silt
- Peat and/or Organic Matter
- Fill Material
- Igneous Rock
- Sedimentary Rock
- Metamorphic Rock

Legend of Boring Operations

- Plan of any boring
- Penetrometer
- 2½" Cone Penetrometer
- Sampler borings (dry)
- Rotary borings (wet)
- Auger borings (dry)
- Jet borings
- Cone borings
- Test pit

1" Soil Tube — Rotary Boring — Penetration Boring

Notes

The contractor's attention is directed to Section 2, Article (c) of the Standard Specifications and to the Special Provisions accompanying this set of plans.

Classification of earth material as shown on this sheet is based upon field inspection and is not to be construed to imply mechanical analysis.

State of California
Department of Public Works
Division of Highways

NEWCASTLE UNDERPASS

LOG OF TEST BORINGS

Scale 1" = 10' | Bridge 19-103 | File | Drawing C-5033-15

Prep. Drawing No. F-20033

225

I HEREBY CERTIFY THAT THIS IS A TRUE AND ACCURATE COPY OF THE ABOVE DOCUMENT TAKEN UNDER MY DIRECTION AND CONTROL ON THIS DATE IN SACRAMENTO, CALIFORNIA PURSUANT TO AUTHORIZATION BY THE DIRECTOR OF PUBLIC WORKS.

DATE 11. 3.1971 SIGNATURE [illegible] TITLE [illegible]

ClibPDF - www.fastio.com

BRIDGE DEPARTMENT

98

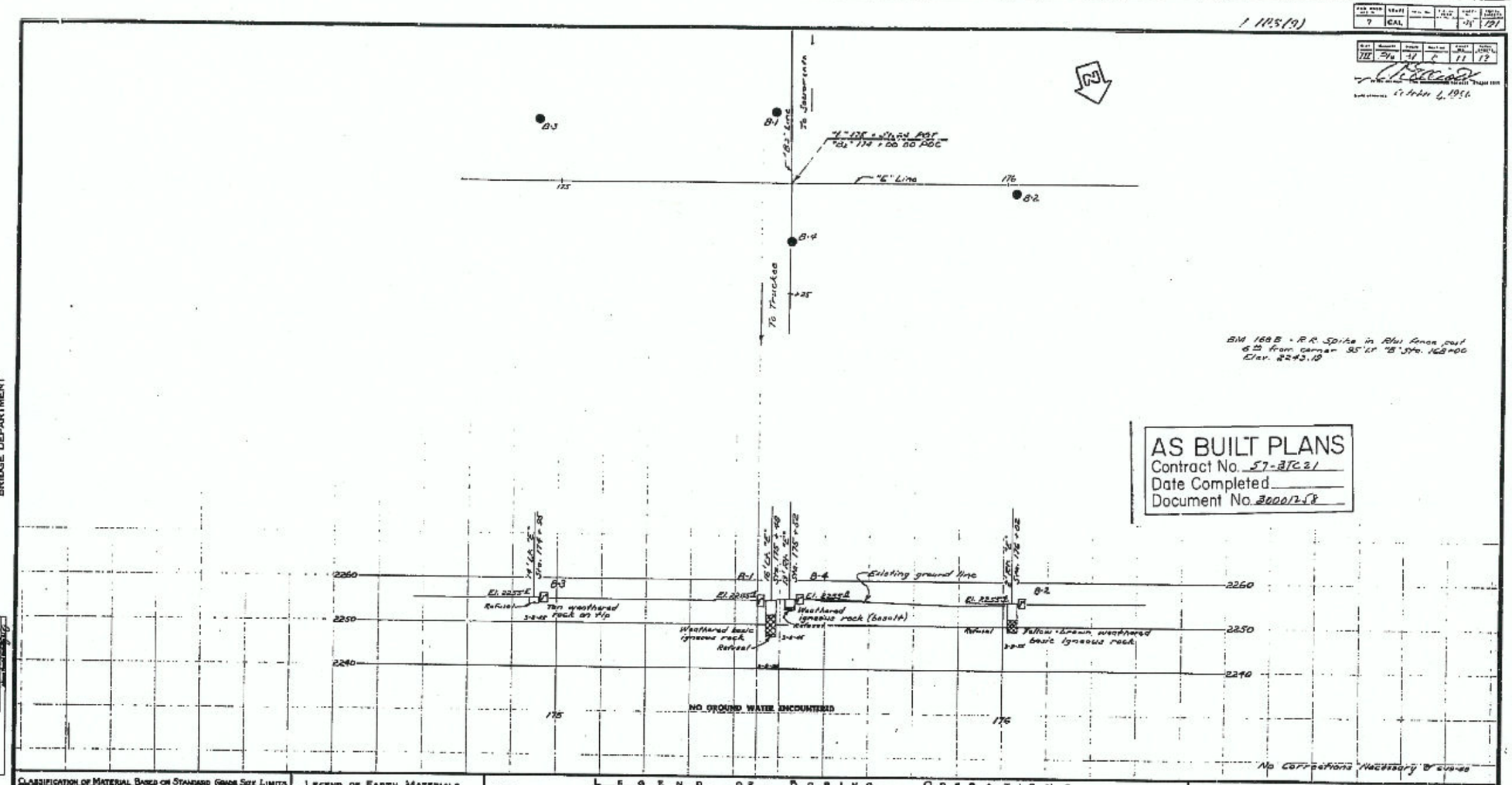

AS BUILT PLANS
Contract No. 57-3TC21
Date Completed
Document No. 3000128

Classification of Material Based on Standard Grade Size Limits

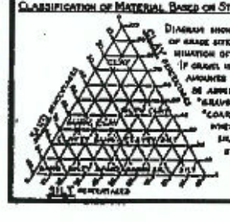

Diagram showing the basis for estimates of grade size distribution used in determination of class names. If gravel is present in appreciable amounts the term "gravelly" may be added to the class name, viz. "gravelly sand." The terms "coarse," "medium" and "fine" when used to describe sand, silt and gravel, refer to standard grade size limits.

Legend of Earth Materials

- Gravel
- Sand
- Silt
- Clay
- Sandy Clay or Clayey Sand
- Sandy Silt or Silty Sand
- Silty Clay or Clayey Silt
- Peat and/or Organic Matter
- Fill Material
- Igneous Rock
- Sedimentary Rock
- Metamorphic Rock

Legend of Boring Operations

- Plan of any boring
- Penetrometer
- 2½" Cone Penetrometer
- Sampler boring (dry)
- Rotary boring (wet)
- Auger boring (dry)
- Jet boring
- Core boring
- Test pit

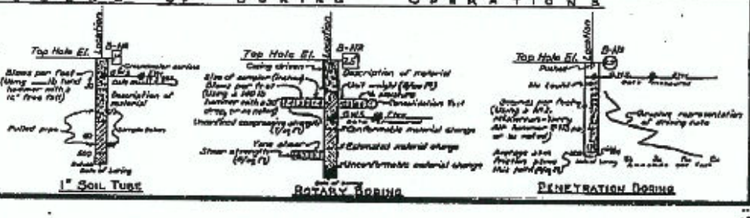

NOTES

The contractor's attention is directed to Section 2, Article (c) of the Standard Specifications and to the Special Provisions accompanying this set of plans.

Classification of earth material as shown on this sheet is based upon field inspection and is not to be construed to imply mechanical analysis.

STATE OF CALIFORNIA
DEPARTMENT OF PUBLIC WORKS
DIVISION OF HIGHWAYS

WEIMAR CROSSROAD OVERCROSSING

LOG OF TEST BORINGS

Scale	Bridge	File	Drawing
1" = 10'	19-83		C-4182-11

PREL. DRAWING NO. P-4182

I HEREBY CERTIFY THAT THIS IS A TRUE AND ACCURATE COPY OF THE ABOVE DOCUMENT TAKEN WORK BY DIRECTION AND CONTROL OF THIS DATE IN SACRAMENTO, CALIFORNIA PURSUANT TO AUTHORIZATION BY THE DIRECTOR OF PUBLIC WORKS.

DATE _____ SIGNATURE _____ TITLE _____

ClibPDF