Dist	COUNTY	ROUTE	POST MILES TOTAL PROJECT	SHEET No.	TOTAL SHEETS
03	But	99	28.1/29.6	126	231

M. A. Panchesson 4-14-12
REGISTERED CIVIL ENGINEER DATE

6-25-12
PLANS APPROVAL DATE

REGISTERED PROFESSIONAL ENGINEER M.A. PANCHESSON No. 44125 Exp. 06-30-13 CIVIL STATE OF CALIFORNIA

THE STATE OF CALIFORNIA OR ITS OFFICERS OR AGENTS SHALL NOT BE RESPONSIBLE FOR THE ACCURACY OR COMPLETENESS OF SCANNED COPIES OF THIS PLAN SHEET.

ROADWAY EXCAVATION 3

STATION	ALIGNMENT	ROADWAY EXCAVATION	(N) EMBANKMENT
		CY	CY
330+00.00 TO 374+00.00	NB1	9,272	1,396
339+70.00 TO 373+40.00	SB1	4,361	2,442
10+00.00 TO 47+02.00	DTR1	1,337	555
337+00.00 TO 374+20.00	GUTTER FL	3,431	86
10+00.00 TO 10+97.21	A1	58	16
10+00.00 TO 10+97.21	A2	22	36
0+32.00 TO 1+20.00	PR1	2	29
0+32.00 TO 1+15.00	PR2	2	18
	TOTAL	18,485	4,578

(N) - NOT A SEPARATE PAY ITEM, FOR INFORMATION ONLY.

FENCE

STATION LIMITS	REMOVE FENCE	FENCE (TYPE WM AND BW)	CHAIN LINK FENCE (TYPE CL-6)
	LF	LF	LF
"NB1" 350+62.10 TO 352+84.00 Rt		230.8	
"NB1" 350+62.10 TO 352+93.73 Rt	244.5		
"SB1" 350+64.22 TO 353+71.50 Lt	320.7		
"SB1" 352+71.27 Lt	15.2		
"NB1" 350+64.20 TO 352+66.40 Lt			207.7
TOTAL	580.4	230.8	207.7

COLD PLANE ASPHALT CONCRETE PAVEMENT

STATION LIMITS	COLD PLANE AC PAVEMENT
	SQYD
"NB1" 335+28.00 TO 338+00.00	1,379
"NB1" 338+00.00 TO 344+75.00	1,800
"NB1" 344+75.00 TO 353+94.54	1,226
"NB1" 357+15.75 TO 363+55.00	852
"NB1" 363+55.00 TO 378+10.00	3,880
TOTAL	9,137

REPLACE ASPHALT CONCRETE SURFACING

STATION	LENGTH	WIDTH	REPLACE AC SURFACING
	LF	LF	CY
"NB1" STA 343+93.00 TO 344+75.00 Rt	82	12	9.1
"NB1" STA 367+00.00 TO 368+00.00 Rt	100	12	11.1
"NB1" STA 376+50.00 TO 377+00.00 Rt	50	12	5.6
		TOTAL	25.8

TEMPORARY RAILING (TYPE K)

STAGE	LOCATION	LENGTH
		LF
1,2&3	"NB1" STA 352+40.00 TO 353+80.00 Lt	140
1&2	"SB1" STA 357+34.00 TO 358+74.00 Rt	140
2,3,4&5	"NB1" STA 353+76.00 TO 357+96.00 Lt	420
2	"SB1" STA 341+10.00 TO 371+70.00 Lt	3,060
3	"NB1" STA 343+75.00 TO 363+75.00 Rt	2,000
3,4&5	"SB1" STA 345+04.00 TO 364+04.00 Lt	1,900
3&4	"SB1" STA 352+57.00 TO 353+77.00 Rt	120
4	"NB1" STA 343+75.00 TO 363+75.00 Rt	2,000
6	"SB1" STA 353+60.00 TO 359+60.00 Lt	600
2&3	"NB1" STA 353+78.00 TO 357+38.00 Lt	360
	TOTAL	10,640

TEMPORARY TRAFFIC SCREEN

STAGE	LOCATION	LENGTH
		LF
1,2&3	"NB1" STA 352+40.00 TO 353+80.00 Lt	140
1&2	"SB1" STA 357+34.00 TO 358+74.00 Rt	140
2,3,4&5	"NB1" STA 353+76.00 TO 357+96.00 Lt	420
2	"SB1" STA 341+10.00 TO 371+70.00 Lt	3,060
3	"NB1" STA 343+75.00 TO 363+75.00 Rt	2,000
3,4&5	"SB1" STA 345+04.00 TO 364+04.00 Lt	1,900
3&4	"SB1" STA 352+57.00 TO 353+77.00 Rt	120
4	"NB1" STA 343+75.00 TO 363+75.00 Rt	2,000
6	"SB1" STA 353+60.00 TO 359+60.00 Lt	600
2&3	"NB1" STA 353+78.00 TO 357+38.00 Lt	360
	TOTAL	10,640

RUBBERIZED HOT MIX ASPHALT (OPEN GRADED)

LOCATION	TON
"NB1" STA 338+00.00 TO 344+75.00	123.0
"NB1" STA 344+75.00 TO 353+52.00	159.8
"NB1" STA 357+60.00 TO 363+55.00	108.4
"NB1" STA 363+55.00 TO 374+00.00	190.4
"NB1" STA 335+28.00 TO 336+00.00	42.6
"NB1" STA 336+00.00 TO 338+00.00	60.7
TOTAL	684.9

TEMPORARY CRASH CUSHION MODULES

STAGE	LOCATION	TOTAL CUSHIONS
		EA
1	"NB1" STA 352+10.00 Rt	14
1	"SB1" STA 358+80.00 Rt	14
2	"SB1" STA 358+00.00 Lt	14
2	"SB1" STA 371+19.00 Rt	14
3	"NB1" STA 343+50.00 Rt	14
3	"SB1" STA 352+10.00 Rt	14
3	"SB1" STA 364+10.00 Lt	14
4	"NB1" STA 343+50.00 Rt	14
6	"SB1" STA 358+75.00 Lt	14
	TOTAL	126

TEMPORARY FENCE (TYPE ESA)

LOCATION	LF
"NB1" 352+18.40 Rt	62.8
"SB1" 371+29.40 Lt	62.8
"SB1" 372+26.20 Lt	62.8
"SB1" 387+65.60 Lt	62.8
1st CONSTRUCTION SEASON	
"NB1" 354+00 TO 354+34 Rt	358.3
"NB1" 354+93 TO 356+98 Rt	315.6
2nd CONSTRUCTION SEASON	
"NB1" 354+00 TO 354+34 Rt	358.3
"NB1" 354+93 TO 356+98 Rt	315.6
TOTAL	1599.0

CRACK TREATMENT

STATION LIMITS	DIRECTION	CRACK TREATMENT
		LNMI
335+28.00 TO 344+75.00	NB1	0.36
363+55.00 TO 378+10.00	NB1	0.55
	TOTAL	0.91

3 REVISED PER ADDENDUM No. 3 DATED FEBRUARY 22, 2013

SUMMARY OF QUANTITIES

Q-1

REVISED BY	DATE REVISED	CALCULATED-DESIGNED BY	CHECKED BY	FUNCTIONAL SUPERVISOR
SUDHA M. KODALI	CARMEN RODRIGUEZ			ALI KIANI

STATE OF CALIFORNIA - DEPARTMENT OF TRANSPORTATION
Caltrans® DIVISION OF ENGINEERING

LAST REVISION 00-00-00 | DATE PLOTTED => 22-FEB-2013 | TIME PLOTTED => 12:39

DIST	COUNTY	ROUTE	POST MILES TOTAL PROJECT	SHEET No.	TOTAL SHEETS
03	But	99	28.1/29.6	205	231

REGISTERED CIVIL ENGINEER 6-06-12 DATE

6-25-12
PLANS APPROVAL DATE

REGISTERED PROFESSIONAL ENGINEER Keith Stillmunkes No. 68878 Exp. 9/30/13 CIVIL STATE OF CALIFORNIA

The State of California or its officers or agents shall not be responsible for the accuracy or completeness of electronic copies of this plan sheet.

NOTES:

(A) Paint "Butte Creek Bridge Right"

(B) Paint "Bridge No. 12-0126R"

(C) Approach Slab Type N(30S)

(D) Existing deck drains, Type "B"

(E) RSP at abutments, see "Road Plans"

(F) Concrete Barrier Type 732 (B11-55)

(G) Temporary Railing Type K, see "Road Plans" (T3)

(H) MBGR, see "Road Plans"

(I) Temporary Scupper space every 10'-0". Fill scupper with grout after completion of stage 2.

(J) Prior to Stage 1, Remove existing Type 25 Concrete Barrier and place Temporary Railing Type K, anchored to bridge deck.

(K) After Stage 2, place Concrete Barrier Type 732(Mod)

(L) 3" Electrical Conduit, see "Road Plans"

(M) Deck Drain, Type "B", Total 15. Place near Sta 353+99, 354+10, 354+25, 354+40, 355+30, 355+50, 355+70, 356+15, 356+30, 356+44, 356+58, 356+72, 356+86, 357+00, 357+12. (B7-5)

(N) For General Notes, Index To Plans, Hydrologic Summary and Pile Data, see "INDEX TO PLANS" sheet.

QUANTITIES

BRIDGE REMOVAL	LUMP	SUM
STRUCTURE EXCAVATION (BRIDGE)	450	CY
STRUCTURE EXCAVATION (TYPE A)	846	CY
STRUCTURE BACKFILL (BRIDGE)	337	CY
FURNISH STEEL PILING (HP 14 X 117)	4,910	LF
DRIVE STEEL PILE (HP 14 X 117)	100	EA
PRESTRESSING CAST-IN-PLACE CONCRETE	LUMP	SUM
SEAL COURSE CONCRETE	71	CY
BAT HABITAT	4	EA
STRUCTURAL CONCRETE, BRIDGE FOOTING	207	CY
STRUCTURAL CONCRETE, BRIDGE	1,215 ~~1,830~~	CY
STRUCTURAL CONCRETE, APPROACH SLAB (TYPE N)	98	CY
JOINT SEAL ASSEMBLY (MR 2½")	79	LF
BAR REINFORCING STEEL (BRIDGE)	297,610	LB
24" WELDED STEEL PIPE CASING (BRIDGE)	77	LF
MISCELLANEOUS METAL (BRIDGE)	300	LB
CONCRETE BARRIER (TYPE 732 MODIFIED)	358 ~~384~~	LF
CONCRETE BARRIER (TYPE 732)	723 ~~768~~	LF

2 3

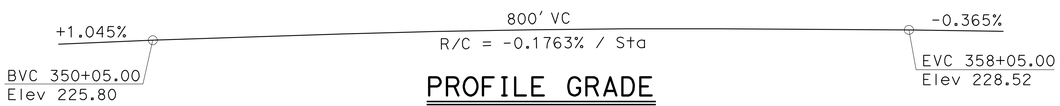

PROFILE GRADE

No Scale

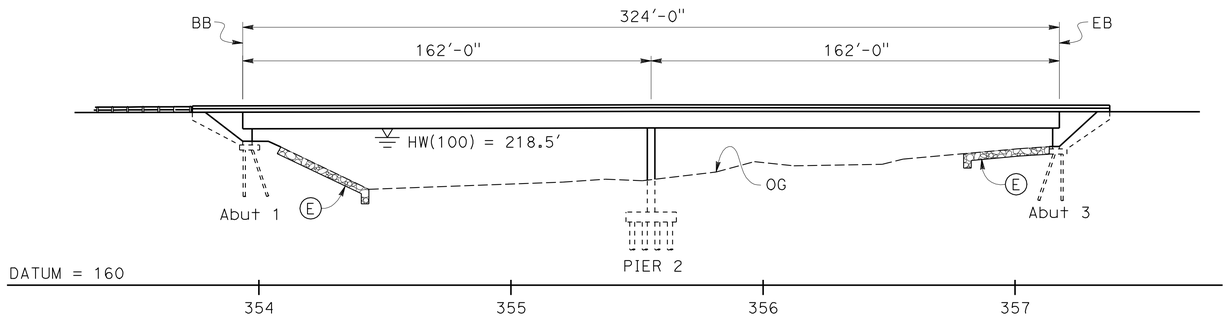

ELEVATION

1" = 30'

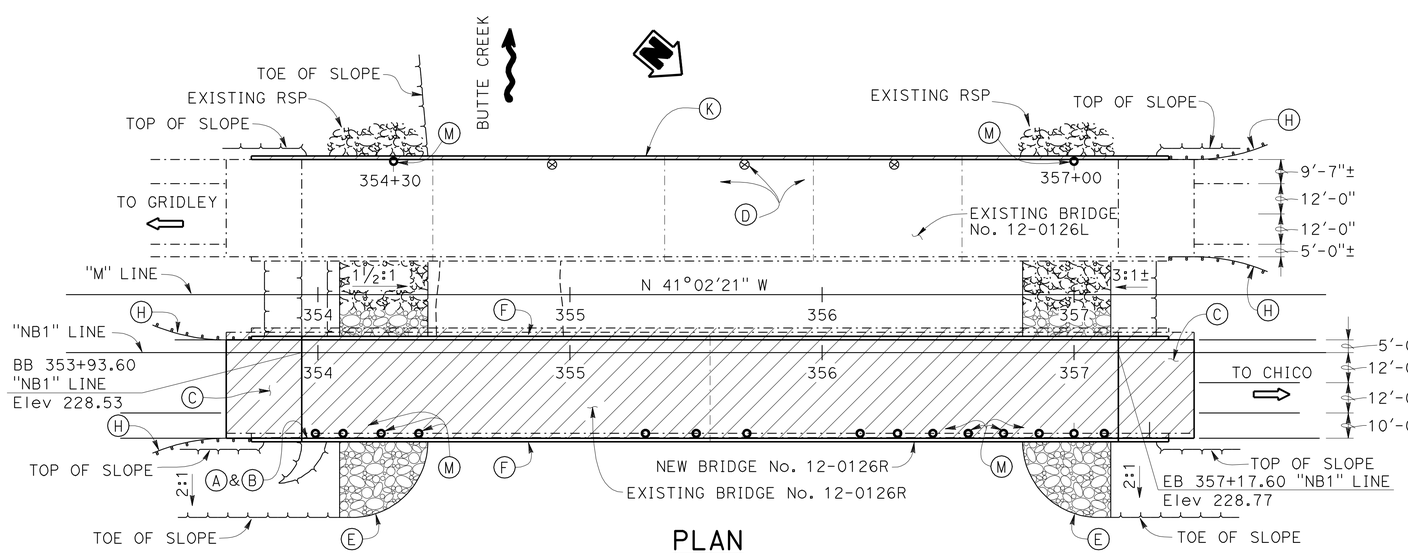

PLAN

1" = 30'

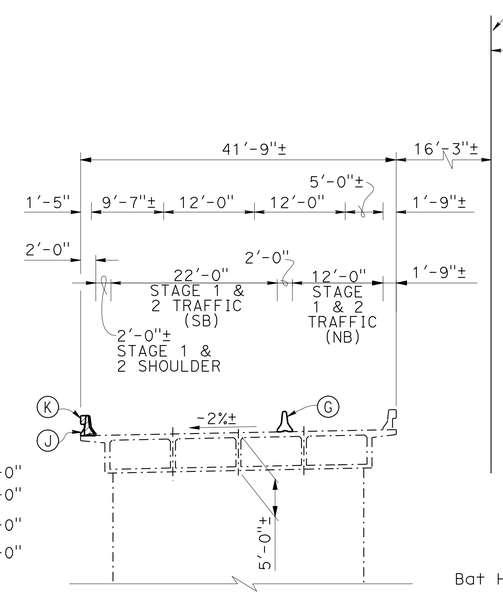

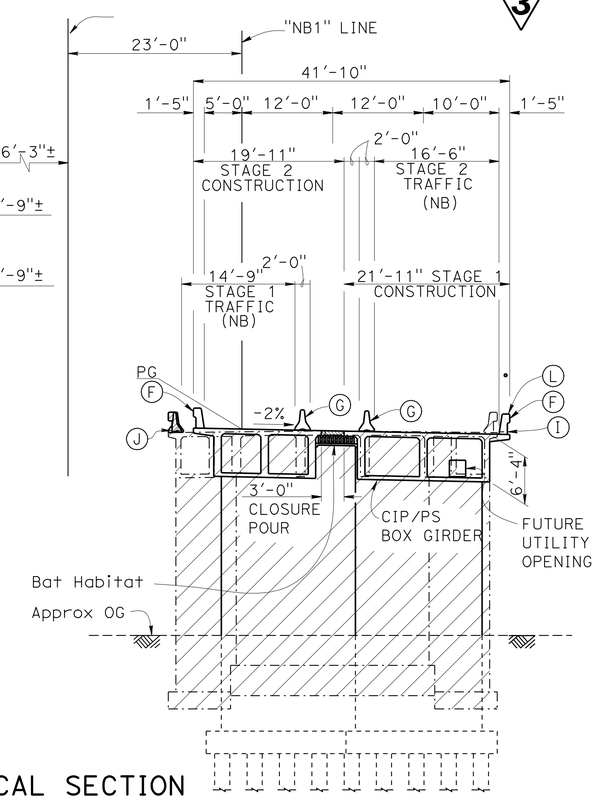

TYPICAL SECTION

1" = 10'

NOTE:
THE CONTRACTOR SHALL VERIFY ALL CONTROLLING FIELD DIMENSIONS BEFORE ORDERING OR FABRICATING ANY MATERIAL.

2 **REVISED PER ADDENDUM NO. 2 DATED FEBRUARY 15, 2013**

3 **REVISED PER ADDENDUM No. 3 DATED FEBRUARY 22, 2013**

LEGEND:

Indicates existing

Indicates bridge removal

Indicates closure pour

DESIGN	BY Keith Stillmunkes	CHECKED Mario Guadamuz	LOAD & RESISTANCE FACTOR DESIGN	LIVE LOADING: HL93 W/"LOW-BOY"; PERMIT DESIGN VEHICLE
DETAILS	BY G. Dickerson / Y. Feng	CHECKED Mario Guadamuz	LAYOUT BY Keith Stillmunkes	CHECKED Mario Guadamuz
QUANTITIES	BY Gerald Dickerson	CHECKED Yingjiue Feng	SPECIFICATIONS BY Jennifer Ramirez	PLANS AND SPECS COMPARED Jennifer Ramirez

Kelly Ann Holden
DESIGN ENGINEER

STATE OF CALIFORNIA
DEPARTMENT OF TRANSPORTATION

DIVISION OF ENGINEERING SERVICES
STRUCTURE DESIGN
DESIGN BRANCH 7

BRIDGE NO. 12-0126R
POST MILE 28.7

BUTTE CREEK BRIDGE, RIGHT (REPLACE)
GENERAL PLAN

ORIGINAL SCALE IN INCHES FOR REDUCED PLANS 0 1 2 3

UNIT: 3592
PROJECT NUMBER & PHASE: 0300000509 1
CONTRACT NO.: 03-3E6201

DISREGARD PRINTS BEARING EARLIER REVISION DATES

REVISION DATES: 4-28-11 4-2-12 2-28-12 2-1-12

SHEET 1 OF 27

STRUCTURES DESIGN GENERAL PLAN SHEET (ENGLISH) (REV.09-01-10)

FILE => 12-0126r-a-gp.add

USERNAME => s119571 DATE PLOTTED => 22-FEB-2013 TIME PLOTTED => 12:48