DIST	COUNTY	ROUTE	POST MILES TOTAL PROJECT	SHEET No.	TOTAL SHEETS
03	But	99	28.1/29.6	205	231

REGISTERED CIVIL ENGINEER 6-06-12 DATE

6-25-12
PLANS APPROVAL DATE

REGISTERED PROFESSIONAL ENGINEER Keith Stillmunkes No. 68878 Exp. 9/30/13 CIVIL STATE OF CALIFORNIA

The State of California or its officers or agents shall not be responsible for the accuracy or completeness of electronic copies of this plan sheet.

NOTES:

(A) Paint "Butte Creek Bridge Right"

(B) Paint "Bridge No. 12-0126R"

(C) Approach Slab Type N(30S)

(D) Existing deck drains, Type "B"

(E) RSP at abutments, see "Road Plans"

(F) Concrete Barrier Type 732 (B11-55)

(G) Temporary Railing Type K, see "Road Plans" (T3)

(H) MBGR, see "Road Plans"

(I) Temporary Scupper space every 10'-0". Fill scupper with grout after completion of stage 2.

(J) Prior to Stage 1, Remove existing Type 25 Concrete Barrier and place Temporary Railing Type K, anchored to bridge deck.

(K) After Stage 2, place Concrete Barrier Type 732(Mod)

(L) 3" Electrical Conduit, see "Road Plans"

(M) Deck Drain, Type "B", Total 15. Place near Sta 353+99, 354+10, 354+25, 354+40, 355+30, 355+50, 355+70, 356+15, 356+30, 356+44, 356+58, 356+72, 356+86, 357+00, 357+12. (B7-5)

(N) For General Notes, Index To Plans, Hydrologic Summary and Pile Data, see "INDEX TO PLANS" sheet.

QUANTITIES

BRIDGE REMOVAL	LUMP	SUM
STRUCTURE EXCAVATION (BRIDGE)	450	CY
STRUCTURE EXCAVATION (TYPE A)	846	CY
STRUCTURE BACKFILL (BRIDGE)	337	CY
FURNISH STEEL PILING (HP 14 X 117)	4,910	LF
DRIVE STEEL PILE (HP 14 X 117)	100	EA
PRESTRESSING CAST-IN-PLACE CONCRETE	LUMP	SUM
SEAL COURSE CONCRETE	71	CY
BAT HABITAT	4	EA
STRUCTURAL CONCRETE, BRIDGE FOOTING	207	CY
STRUCTURAL CONCRETE, BRIDGE	1,215 ~~1,830~~	CY
STRUCTURAL CONCRETE, APPROACH SLAB (TYPE N)	98	CY
JOINT SEAL ASSEMBLY (MR 2½")	79	LF
BAR REINFORCING STEEL (BRIDGE)	297,610	LB
24" WELDED STEEL PIPE CASING (BRIDGE)	77	LF
MISCELLANEOUS METAL (BRIDGE)	300	LB
CONCRETE BARRIER (TYPE 732 MODIFIED)	384	LF
CONCRETE BARRIER (TYPE 732)	768	LF

2

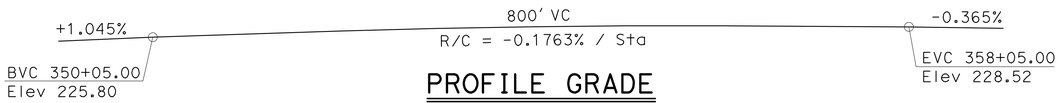

PROFILE GRADE

No Scale

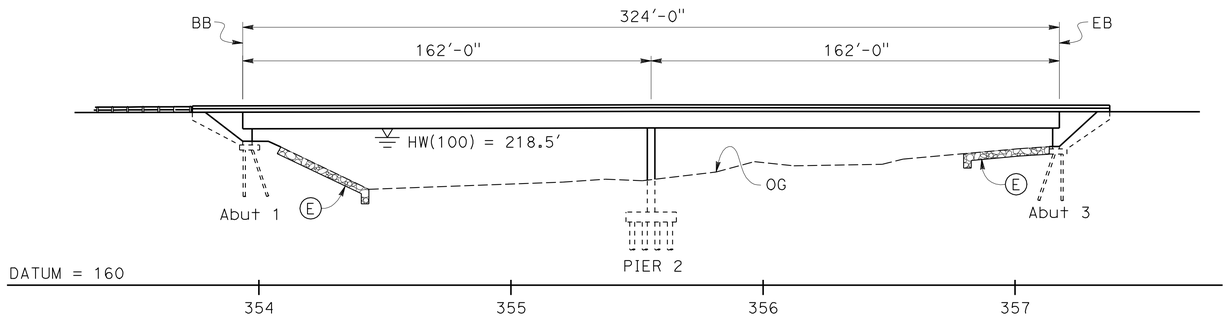

ELEVATION

1" = 30'

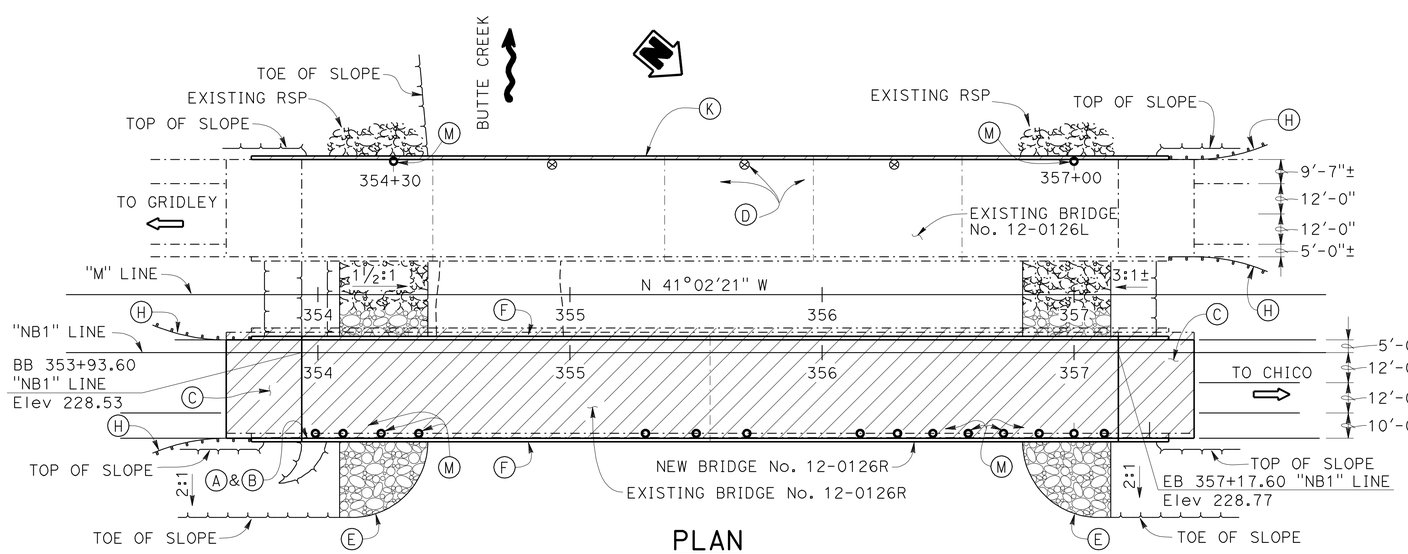

PLAN

1" = 30'

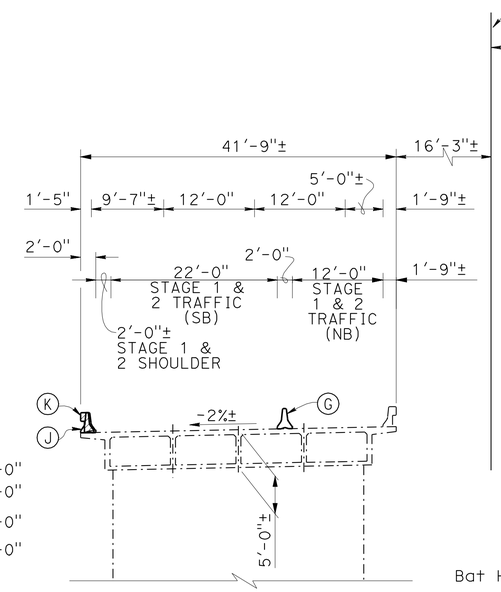

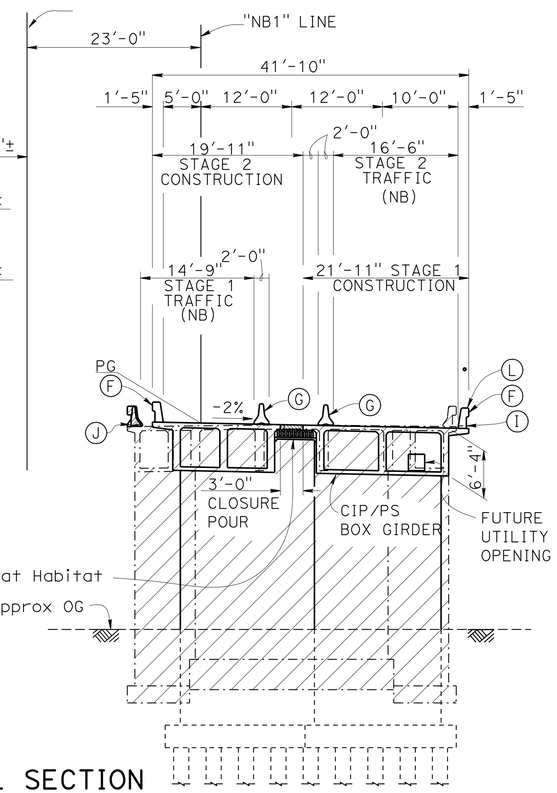

TYPICAL SECTION

1" = 10'

NOTE:
THE CONTRACTOR SHALL VERIFY ALL CONTROLLING FIELD DIMENSIONS BEFORE ORDERING OR FABRICATING ANY MATERIAL.

2 **REVISED PER ADDENDUM NO. 2 DATED FEBRUARY 15, 2013**

LEGEND:

Indicates existing

Indicates bridge removal

Indicates closure pour

DESIGN	BY Keith Stillmunkes	CHECKED Mario Guadamuz	LOAD & RESISTANCE FACTOR DESIGN	LIVE LOADING: HL93 W/"LOW-BOY"; PERMIT DESIGN VEHICLE	
DETAILS	BY G. Dickerson / Y. Feng	CHECKED Mario Guadamuz	LAYOUT	BY Keith Stillmunkes	CHECKED Mario Guadamuz
QUANTITIES	BY Gerald Dickerson	CHECKED Yingjiue Feng	SPECIFICATIONS	BY Jennifer Ramirez	PLANS AND SPECS COMPARED Jennifer Ramirez

Kelly Ann Holden
DESIGN ENGINEER

STATE OF CALIFORNIA
DEPARTMENT OF TRANSPORTATION

DIVISION OF ENGINEERING SERVICES
STRUCTURE DESIGN
DESIGN BRANCH 7

BRIDGE NO. 12-0126R
POST MILE 28.7

BUTTE CREEK BRIDGE, RIGHT (REPLACE)
GENERAL PLAN

ORIGINAL SCALE IN INCHES FOR REDUCED PLANS 0 1 2 3

UNIT: 3592
PROJECT NUMBER & PHASE: 0300000509 1
CONTRACT NO.: 03-3E6201

DISREGARD PRINTS BEARING EARLIER REVISION DATES

REVISION DATES 4-28-11 4-2-12 2-24-12 2-1-12

SHEET 1 OF 27

USERNAME => s124496 DATE PLOTTED => 15-FEB-2013 TIME PLOTTED => 13:02

STRUCTURES DESIGN GENERAL PLAN SHEET (ENGLISH) (REV.09-01-10)

FILE => 12-0126r-a-gp.add