ACIMNH-0056(341)

Dist	COUNTY	ROUTE	POST MILES TOTAL PROJECT	SHEET No.	TOTAL SHEETS
03	Sac	5	23.3	1	57

STATE OF CALIFORNIA
DEPARTMENT OF TRANSPORTATION

PROJECT PLANS FOR CONSTRUCTION ON
STATE HIGHWAY

IN SACRAMENTO COUNTY
ON ROUTE 5
ABOUT 1.4 MILES SOUTH OF RICHARDS BOULEVARD

TO BE SUPPLEMENTED BY STANDARD PLANS DATED 2010

INDEX OF PLANS

SHEET No.	DESCRIPTION
1	TITLE AND LOCATION MAP
2	LAYOUT
3	SUMMARY OF QUANTITIES
4-9	REVISED STANDARD PLANS

STRUCTURE PLANS

10-57	"O" STREET PUMPING PLANT

THE STANDARD PLANS LIST APPLICABLE TO THIS CONTRACT IS INCLUDED IN THE NOTICE TO BIDDERS AND SPECIAL PROVISIONS BOOK.

LOCATION MAP

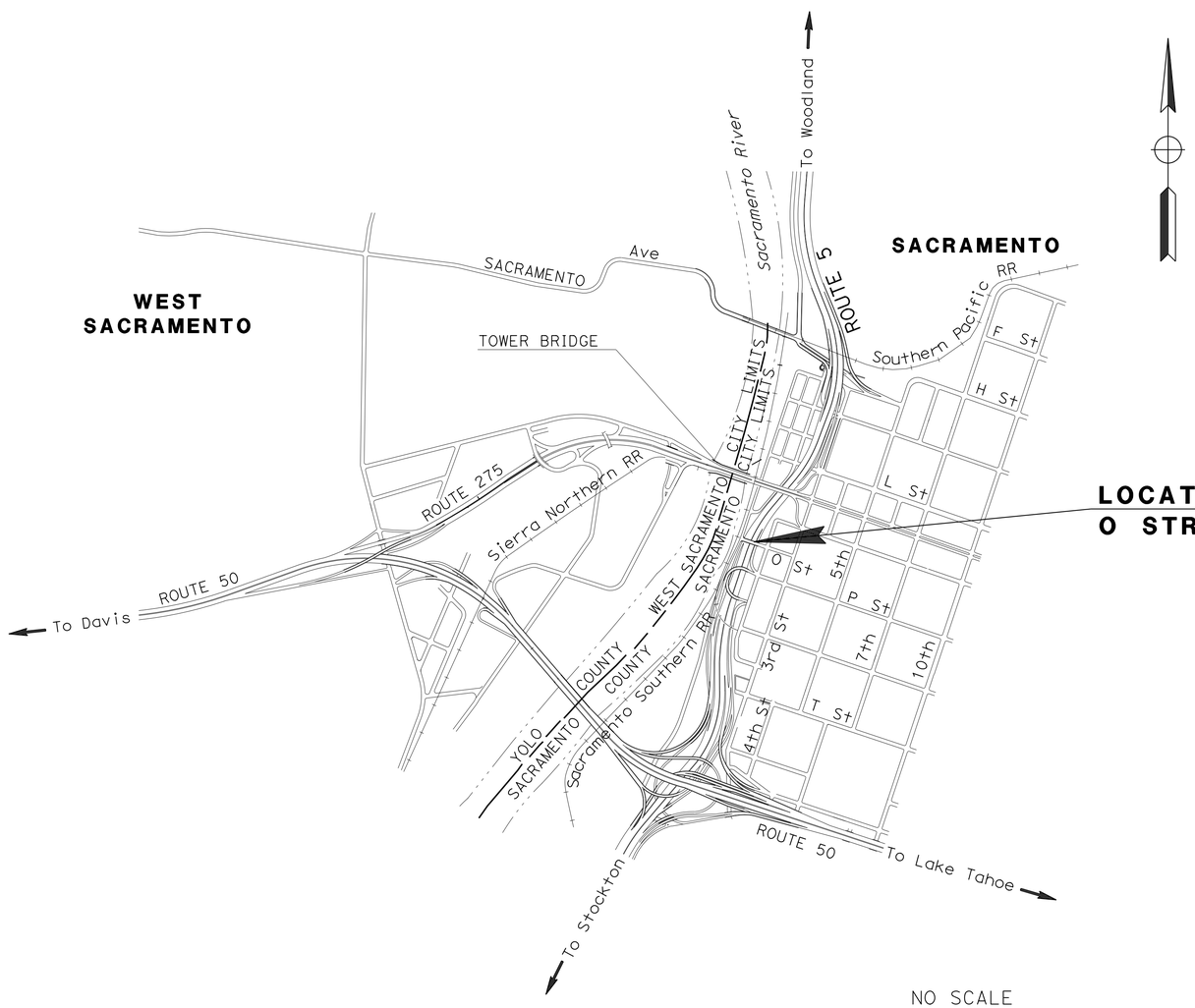

LOCATION OF CONSTRUCTION
O STREET ELEVATION AT I-5 PM 23.3

NO SCALE

PROJECT MANAGER DOUG H. LANGE

DESIGN ENGINEER DEANN SPANGLER

THE CONTRACTOR SHALL POSSESS THE CLASS (OR CLASSES) OF LICENSE AS SPECIFIED IN THE "NOTICE TO BIDDERS."

PROJECT ENGINEER REGISTERED CIVIL ENGINEER — DATE 4-14-14

June 9, 2014
PLANS APPROVAL DATE

REGISTERED PROFESSIONAL ENGINEER — BALJINDER BRAR — No. C 67847 — Exp. 6-30-15 — CIVIL — STATE OF CALIFORNIA

THE STATE OF CALIFORNIA OR ITS OFFICERS OR AGENTS SHALL NOT BE RESPONSIBLE FOR THE ACCURACY OR COMPLETENESS OF SCANNED COPIES OF THIS PLAN SHEET.

CONTRACT No.	03-3F0404
PROJECT ID	0312000058

LAST REVISION 04-10-14 — DATE PLOTTED => 27-AUG-2014 TIME PLOTTED => 05:56

Dist	COUNTY	ROUTE	POST MILES TOTAL PROJECT	SHEET No.	TOTAL SHEETS
03	Sac	5	23.3	2	57

REGISTERED CIVIL ENGINEER 4-14-14 DATE

6-9-14
PLANS APPROVAL DATE

REGISTERED PROFESSIONAL ENGINEER BALJINDER S. BRAR No. C 67847 Exp. 6-30-15 CIVIL STATE OF CALIFORNIA

THE STATE OF CALIFORNIA OR ITS OFFICERS OR AGENTS SHALL NOT BE RESPONSIBLE FOR THE ACCURACY OR COMPLETENESS OF SCANNED COPIES OF THIS PLAN SHEET.

NOTES:

1. FOR ACCURATE RIGHT OF WAY DATA, CONTACT RIGHT OF WAY ENGINEERING AT THE DISTRICT OFFICE.
2. NOT ALL UTILITIES OUTSIDE THE STATE RIGHT OF WAY ARE SHOWN.
3. FOR LOCATION OF VALVE REPLACEMENT AND DETAILS NOT SHOWN, SEE SHEETS GP AND EE-2

ABBREVIATIONS:

KV - KILOVOLT
V - VOLTAGE

UTILITY - OWNERSHIP:

UNDERGROUND ELECTRIC - SACRAMENTO MUNICIPAL UTILITY DISTRICT (SMUD)

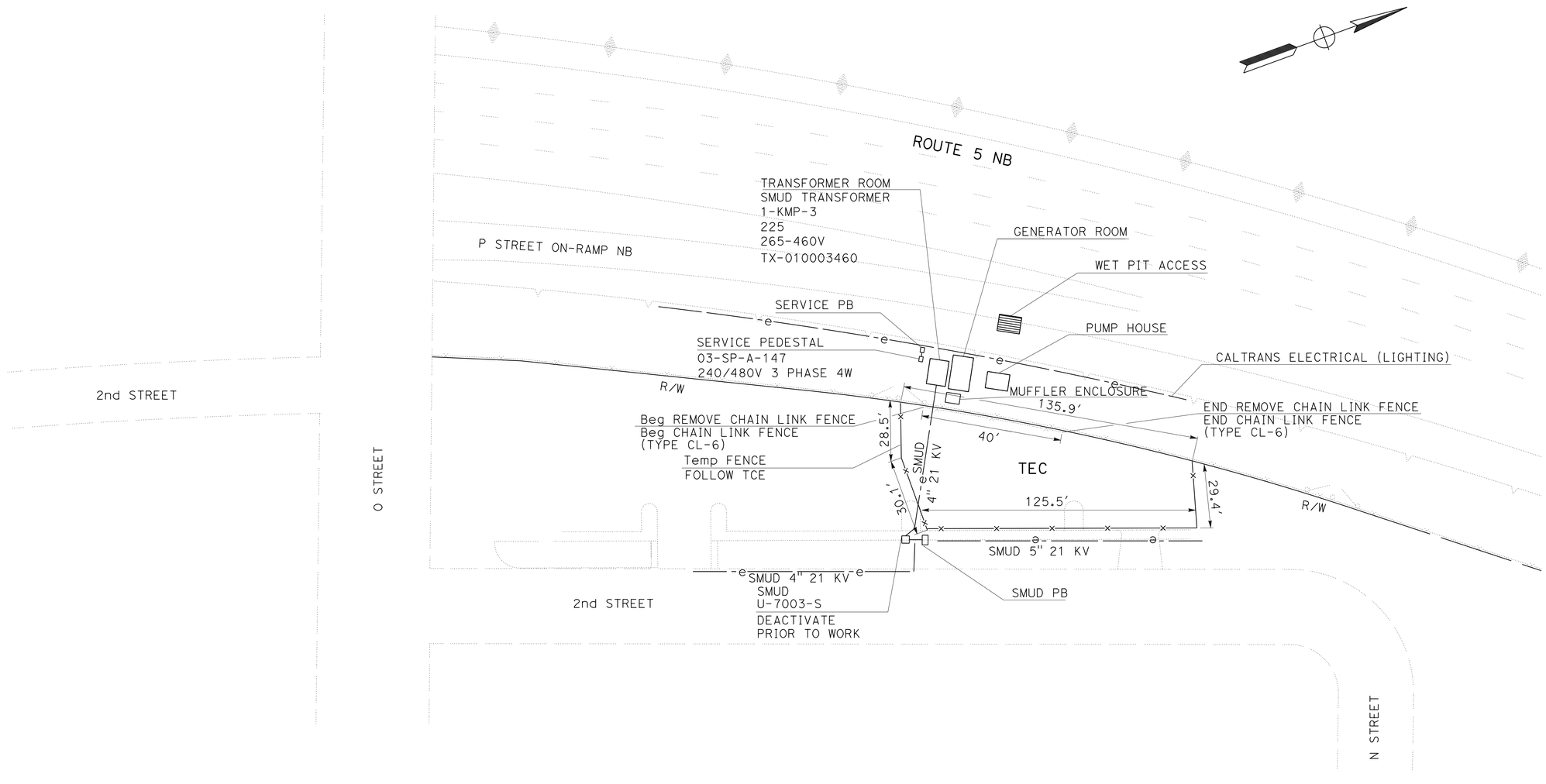

NO SCALE

LAYOUT

L-1

STATE OF CALIFORNIA - DEPARTMENT OF TRANSPORTATION
Caltrans DIVISION OF ENGINEERING

FUNCTIONAL SUPERVISOR: DEANN SPANGLER
CALCULATED-DESIGNED BY: RALPH TOPHAM
CHECKED BY: BALJINDER BRAR
REVISED BY
DATE REVISED

LAST REVISION 01-10-14
DATE PLOTTED => 12-JUN-2014
TIME PLOTTED => 10:43

Dist	COUNTY	ROUTE	POST MILES TOTAL PROJECT	SHEET No.	TOTAL SHEETS
03	Sac	5	23.3	3	57

REGISTERED ~~CIVIL~~ ENGINEER 4-14-14 DATE

6-9-14
PLANS APPROVAL DATE

REGISTERED PROFESSIONAL ENGINEER
BALJINDER S. BRAR
No. C 67847
Exp. 6-30-15
CIVIL
STATE OF CALIFORNIA

THE STATE OF CALIFORNIA OR ITS OFFICERS OR AGENTS SHALL NOT BE RESPONSIBLE FOR THE ACCURACY OR COMPLETENESS OF SCANNED COPIES OF THIS PLAN SHEET.

TEMPORARY WATER POLLUTION CONTROL

ITEM	TEMPORARY DRAINAGE INLET PROTECTION
	EA
JOB SITE	3

FENCE

LOCATION	REMOVE CHAIN LINK FENCE	TEMPORARY FENCE (TYPE CL-6)	CHAIN LINK FENCE (TYPE CL-6)	COMMENTS
	LF	LF	LF	
ALONG RIGHT OF WAY	40		40	SHEET L-1
IN PARKING LOT ALONG TCE		300		SHEET L-1

SUMMARY OF QUANTITIES

Q-1

STATE OF CALIFORNIA - DEPARTMENT OF TRANSPORTATION
Caltrans DIVISION OF ENGINEERING

FUNCTIONAL SUPERVISOR: DEANN SPANGLER
CALCULATED-DESIGNED BY: RALPH TOPHAM
CHECKED BY: BALJINDER BRAR
REVISED BY
DATE REVISED

LAST REVISION 01-10-14
DATE PLOTTED => 10-JUN-2014
TIME PLOTTED => 05:44

M

Maint	MAINTENANCE
Max	MAXIMUM
MB	METAL BEAM
MBB	METAL BEAM BARRIER
MBGR	METAL BEAM GUARD RAILING
Med	MEDIAN
MGS	MIDWEST GUARDRAIL SYSTEM
MH	MANHOLE
Min	MINIMUM
Misc	MISCELLANEOUS
Misc I & S	MISCELLANEOUS IRON AND STEEL
Mkr	MARKER
Mod	MODIFIED, MODIFY
Mon	MONUMENT
MP	METAL PLATE
MPGR	METAL PLATE GUARD RAILING
MR	MOVEMENT RATING
MSE	MECHANICALLY STABILIZED EMBANKMENT
Mt	MOUNTAIN, MOUNT
Mtl	MATERIAL
MVP	MAINTENANCE VEHICLE PULLOUT

N

N	NORTH
NB	NORTHBOUND
No.	NUMBER (MUST HAVE PERIOD)
Nos.	NUMBERS (MUST HAVE PERIOD)
NPS	NOMINAL PIPE SIZE
NS	NEAR SIDE
NSP	NEW STANDARD PLAN
NTS	NOT TO SCALE

O

Oblr	OBLITERATE
OC	OVERCROSSING
OD	OUTSIDE DIAMETER
OF	OUTSIDE FACE
OG	ORIGINAL GROUND
OGAC	OPEN GRADED ASPHALT CONCRETE
OGFC	OPEN GRADED FRICTION COURSE
OH	OVERHEAD
OHWM	ORDINARY HIGH WATER MARK
O-O	OUT TO OUT
Opp	OPPOSITE
OSD	OVERSIDE DRAIN

P

P	PAGE
PAP	PERFORATED ALUMINUM PIPE
PB	PULL BOX
PC	POINT OF CURVATURE, PRECAST
PCC	POINT OF COMPOUND CURVE, PORTLAND CEMENT CONCRETE
PCMS	PORTABLE CHANGEABLE MESSAGE SIGN
PCP	PERFORATED CONCRETE PIPE, PRESTRESSED CONCRETE PIPE
PCVC	POINT OF COMPOUND VERTICAL CURVE
PEC	PERMIT TO ENTER AND CONSTRUCT
Ped	PEDESTRIAN
Ped OC	PEDESTRIAN OVERCROSSING
Ped UC	PEDESTRIAN UNDERCROSSING
Perm Mtl	PERMEABLE MATERIAL

P continued

PG	PROFILE GRADE
PI	POINT OF INTERSECTION
PJP	PARTIAL JOINT PENETRATION
Pkwy	PARKWAY
ℙ,PL	PLATE
P/L	PROPERTY LINE
PM	POST MILE, TIME FROM NOON TO MIDNIGHT
PN	PAVING NOTCH
POC	POINT OF HORIZONTAL CURVE
POT	POINT OF TANGENT
POVC	POINT OF VERTICAL CURVE
PP	PIPE PILE, PLASTIC PIPE, POWER POLE
PPL	PREFORMED PERMEABLE LINER
PPP	PERFORATED PLASTIC PIPE
PRC	POINT OF REVERSE CURVE
PRF	PAVEMENT REINFORCING FABRIC
PRVC	POINT OF REVERSE VERTICAL CURVE
PS&E	PLANS, SPECIFICATIONS AND ESTIMATES
PS, P/S	PRESTRESSED
PSP	PERFORATED STEEL PIPE
PT	POINT OF TANGENCY
PVC	POLYVINYL CHLORIDE
Pvmt	PAVEMENT

Q

Qty	QUANTITY

R

R	RADIUS
R & D	REMOVE AND DISPOSE
R & S	REMOVE AND SALVAGE
R/C	RATE OF CHANGE
RCA	REINFORCED CONCRETE ARCH
RCB	REINFORCED CONCRETE BOX
RCP	REINFORCED CONCRETE PIPE
RCPA	REINFORCED CONCRETE PIPE ARCH
Rd	ROAD
Reinf	REINFORCED, REINFORCEMENT, REINFORCING
Rel	RELOCATE
Repl	REPLACEMENT
Ret	RETAINING
Rev	REVISED, REVISION
Rdwy	ROADWAY
RHMA	RUBBERIZED HOT MIX ASPHALT
Riv	RIVER
RM	ROAD-MIXED
RP	RADIUS POINT, REFERENCE POINT
RR	RAILROAD
RSP	ROCK SLOPE PROTECTION, REVISED STANDARD PLAN
Rt	RIGHT
Rte	ROUTE
RW	REDWOOD, RETAINING WALL
R/W	RIGHT OF WAY
Rwy	RAILWAY

S

S	SOUTH, SUPPLEMENT
SAE	STRUCTURE APPROACH EMBANKMENT
Salv	SALVAGE
SAPP	STRUCTURAL ALUMINUM PLATE PIPE
SB	SOUTHBOUND
SC	SAND CUSHION
SCSP	SLOTTED CORRUGATED STEEL PIPE
SD	STORM DRAIN
Sec	SECOND, SECTION
Sep	SEPARATION
SG	SUBGRADE
Shld	SHOULDER
Sht	SHEET
Sim	SIMILAR
℄	STATION LINE
SM	SELECTED MATERIAL
Spec	SPECIAL, SPECIFICATIONS
SPP	SLOTTED PLASTIC PIPE
SS	SLOPE STAKE
SSBM	STRAP AND SADDLE BRACKET METHOD
SSD	STRUCTURAL SECTION DRAIN
SSPA	STRUCTURAL STEEL PLATE ARCH
SSPP	STRUCTURAL STEEL PLATE PIPE
SSPPA	STRUCTURAL STEEL PLATE PIPE ARCH
SSRP	STEEL SPIRAL RIB PIPE
St	STREET
Sta	STATION
STBB	SINGLE THRIE BEAM BARRIER
Std	STANDARD
Str	STRUCTURE
Surf	SURFACING
SW	SIDEWALK, SOUND WALL
Swr	SEWER
Sym	SYMMETRICAL
S4S	SURFACE 4 SIDES

T

T	SEMI-TANGENT
Tan	TANGENT
TBB	THRIE BEAM BARRIER
Tbr	TIMBER
TC	TOP OF CURB
TCB	TRAFFIC CONTROL BOX
TCE	TEMPORARY CONSTRUCTION EASEMENT
Tel	TELEPHONE
Temp	TEMPORARY
TG	TOP OF GRADE
Tot	TOTAL
TP	TELEPHONE POLE
TPB	TREATED PERMEABLE BASE
TPM	TREATED PERMEABLE MATERIAL
Trans	TRANSITION

T continued

TS	TRANSVERSE, TRAFFIC SIGNAL, TUBULAR STEEL
Typ	TYPICAL

U

UC	UNDERCROSSING
UD	UNDERDRAIN
UG	UNDERGROUND
UON	UNLESS OTHERWISE NOTED
UP	UNDERPASS

V

V	VALVE, DESIGN SPEED
Var	VARIABLE, VARIES
VC	VERTICAL CURVE
VCP	VITRIFIED CLAY PIPE
Vert	VERTICAL
Via	VIADUCT
Vol	VOLUME

W

W	WEST, WIDTH
WB	WESTBOUND
WH	WEEP HOLE
WM	WIRE MESH
WS	WATER SURFACE
WSP	WELDED STEEL PIPE
Wt	WEIGHT
WV	WATER VALVE
WW	WINGWALL
WWLOL	WINGWALL LAYOUT LINE

X

X Sec	CROSS SECTION
Xing	CROSSING

Y

Yr	YEAR
Yrs	YEARS

Dist	COUNTY	ROUTE	POST MILES TOTAL PROJECT	SHEET No.	TOTAL SHEETS
03	Sac	5	23.3	4	57

Grace M. Tsushima
REGISTERED CIVIL ENGINEER

July 19, 2013
PLANS APPROVAL DATE

REGISTERED PROFESSIONAL ENGINEER
Grace M. Tsushima
No. C49814
Exp. 9-30-14
CIVIL
STATE OF CALIFORNIA

THE STATE OF CALIFORNIA OR ITS OFFICERS OR AGENTS SHALL NOT BE RESPONSIBLE FOR THE ACCURACY OR COMPLETENESS OF SCANNED COPIES OF THIS PLAN SHEET.

TO ACCOMPANY PLANS DATED 6-9-14

2010 REVISED STANDARD PLAN RSP A10B

UNIT OF MEASUREMENT SYMBOLS:

Some of the symbols used in the project plan quantity tables and in the Bid Item List are:

TABLE A

SYMBOL USED	DEFINITIONS
ACRE	ACRE
CF	CUBIC FOOT
CY	CUBIC YARD
EA	EACH
GAL	GALLON
LB	POUND
LF	LINEAR FOOT
SQFT	SQUARE FOOT
SQYD	SQUARE YARD
STA	100 FEET
TAB	TABLET
TON	2,000 POUNDS

Some of the symbols used in the plans other than in the project plan quantity tables are:

TABLE B

SYMBOL USED	DEFINITIONS
ksi	KIPS PER SQUARE INCH
ksf	KIPS PER SQUARE FOOT
psi	POUNDS PER SQUARE INCH
psf	POUNDS PER SQUARE FOOT
lb/ft^3, pcf	POUNDS PER CUBIC FOOT
tsf	TONS PER SQUARE FOOT
mph, MPH *	MILES PER HOUR
ø	NOMINAL DIAMETER
oz	OUNCE
lb	POUND
kip	1,000 POUNDS
cal	CALORIE
ft	FOOT OR FEET
gal	GALLON

* For use on a sign panel only

STATE OF CALIFORNIA
DEPARTMENT OF TRANSPORTATION

ABBREVIATIONS (SHEET 2 OF 2)

NO SCALE

RSP A10B DATED JULY 19, 2013 SUPERSEDES STANDARD PLAN A10B DATED MAY 20, 2011 - PAGE 2 OF THE STANDARD PLANS BOOK DATED 2010.

REVISED STANDARD PLAN RSP A10B

6-7-13

Dist	COUNTY	ROUTE	POST MILES TOTAL PROJECT	SHEET No.	TOTAL SHEETS
03	Sac	5	23.3	5	57

REGISTERED CIVIL ENGINEER

July 19, 2013
PLANS APPROVAL DATE

REGISTERED PROFESSIONAL ENGINEER
Gurinderpal Bhullar
No. C48815
Exp. 9-30-14
CIVIL
STATE OF CALIFORNIA

THE STATE OF CALIFORNIA OR ITS OFFICERS OR AGENTS SHALL NOT BE RESPONSIBLE FOR THE ACCURACY OR COMPLETENESS OF SCANNED COPIES OF THIS PLAN SHEET.

TO ACCOMPANY PLANS DATED 6-9-14

2010 REVISED STANDARD PLAN RSP T9

TABLE 1

TAPER LENGTH CRITERIA AND CHANNELIZING DEVICE SPACING

SPEED (S)	MINIMUM TAPER LENGTH * FOR WIDTH OF OFFSET 12 FEET (W)				MAXIMUM CHANNELIZING DEVICE SPACING		
					X	Y	Z **
	TANGENT 2L	MERGING L	SHIFTING L/2	SHOULDER L/3	TAPER	TANGENT	CONFLICT
mph	ft	ft	ft	ft	ft	ft	ft
20	160	80	40	27	20	40	10
25	250	125	63	42	25	50	12
30	360	180	90	60	30	60	15
35	490	245	123	82	35	70	17
40	640	320	160	107	40	80	20
45	1080	540	270	180	45	90	22
50	1200	600	300	200	50	100	25
55	1320	660	330	220	55	110	27
60	1440	720	360	240	60	120	30
65	1560	780	390	260	65	130	32
70	1680	840	420	280	70	140	35

* - For other offsets, use the following merging taper length formula for L:
For speed of 40 mph or less, $L = WS^2/60$
For speed of 45 mph or more, $L = WS$

Where: L = Taper length in feet
W = Width of offset in feet
S = Posted speed limit, off-peak 85th-percentile speed prior to work starting, or the anticipated operating speed in mph

** - Use for taper and tangent sections where there are no pavement markings or where there is a conflict between existing pavement markings and channelizers (CA).

TABLE 2

LONGITUDINAL BUFFER SPACE AND FLAGGER STATION SPACING

SPEED *	Min D **	DOWNGRADE Min D ***		
		-3%	-6%	-9%
mph	ft	ft	ft	ft
20	115	116	120	126
25	155	158	165	173
30	200	205	215	227
35	250	257	271	287
40	305	315	333	354
45	360	378	400	427
50	425	446	474	507
55	495	520	553	593
60	570	598	638	686
65	645	682	728	785
70	730	771	825	891

* - Speed is posted speed limit, off-peak 85th-percentile speed prior to work starting, or the anticipated operating speed in mph

** - Longitudinal buffer space or flagger station spacing

*** - Use on sustained downgrade steeper than -3 percent and longer than 1 mile.

TABLE 3

ADVANCE WARNING SIGN SPACING

ROAD TYPE	DISTANCE BETWEEN SIGNS *		
	A	B	C
	ft	ft	ft
URBAN - 25 mph OR LESS	100	100	100
URBAN - MORE THAN 25 mph TO 40 mph	250	250	250
URBAN - MORE THAN 40 mph	350	350	350
RURAL	500	500	500
EXPRESSWAY / FREEWAY	1000	1500	2640

* - The distances are approximate, are intended for guidance purposes only, and should be applied with engineering judgment. These distances should be adjusted by the Engineer for field conditions, if necessary, by increasing or decreasing the recommmended distances.

STATE OF CALIFORNIA
DEPARTMENT OF TRANSPORTATION

TRAFFIC CONTROL SYSTEM TABLES FOR LANE AND RAMP CLOSURES

NO SCALE

RSP T9 DATED JULY 19, 2013 SUPERSEDES RSP T9 DATED APRIL 19, 2013 THAT SUPPLEMENTS THE STANDARD PLANS BOOK DATED 2010.

REVISED STANDARD PLAN RSP T9

4-30-13

Dist	COUNTY	ROUTE	POST MILES TOTAL PROJECT	SHEET No.	TOTAL SHEETS
03	Sac	5	23.3	6	57

REGISTERED CIVIL ENGINEER

April 19, 2013
PLANS APPROVAL DATE

REGISTERED PROFESSIONAL ENGINEER Gurinderpal Bhullar No. C48815 Exp. 9-30-14 CIVIL STATE OF CALIFORNIA

THE STATE OF CALIFORNIA OR ITS OFFICERS OR AGENTS SHALL NOT BE RESPONSIBLE FOR THE ACCURACY OR COMPLETENESS OF SCANNED COPIES OF THIS PLAN SHEET.

TO ACCOMPANY PLANS DATED 6-9-14

NOTES:

See Revised Standard Plan RSP T9 for tables.

Use cone spacing X for taper segment, Y for tangent segment or Z for conflict situations, as approriate, per Table 1, unless X, Y, or Z cone spacing is shown on this sheet.

Unless otherwise specified in the special provisions, all temporary warning signs shall have black legend on fluorescent orange background.

California codes are designated by (CA). Otherwise, Federal (MUTCD) codes are shown.

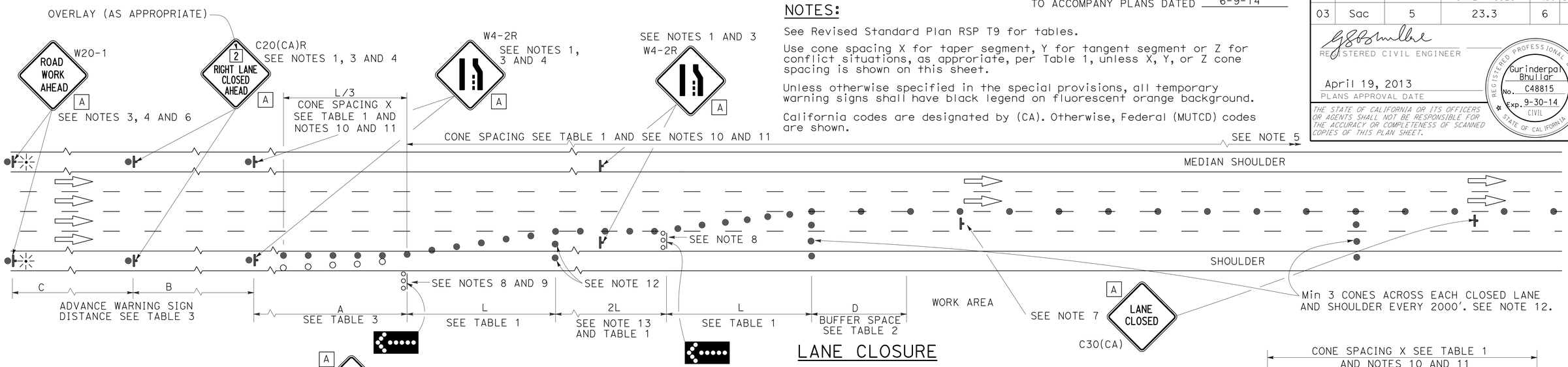

LANE CLOSURE

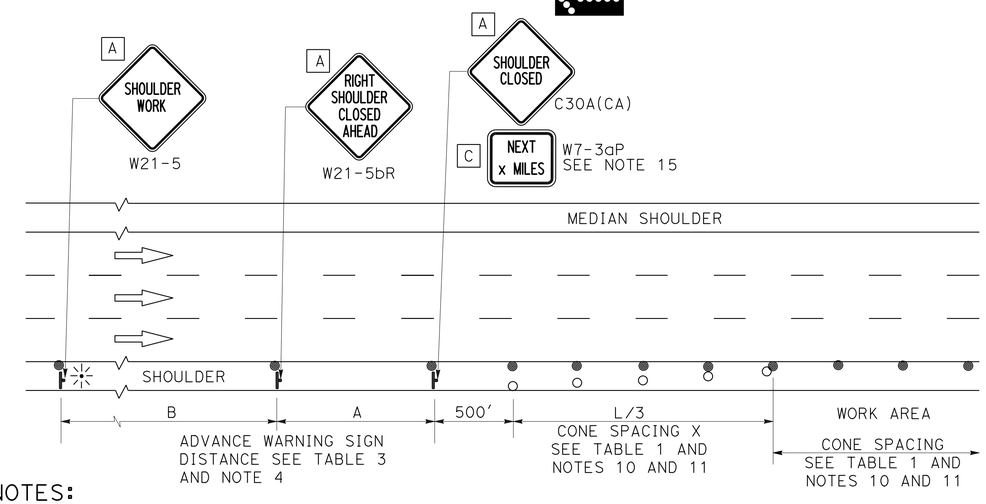

SHOULDER CLOSURE

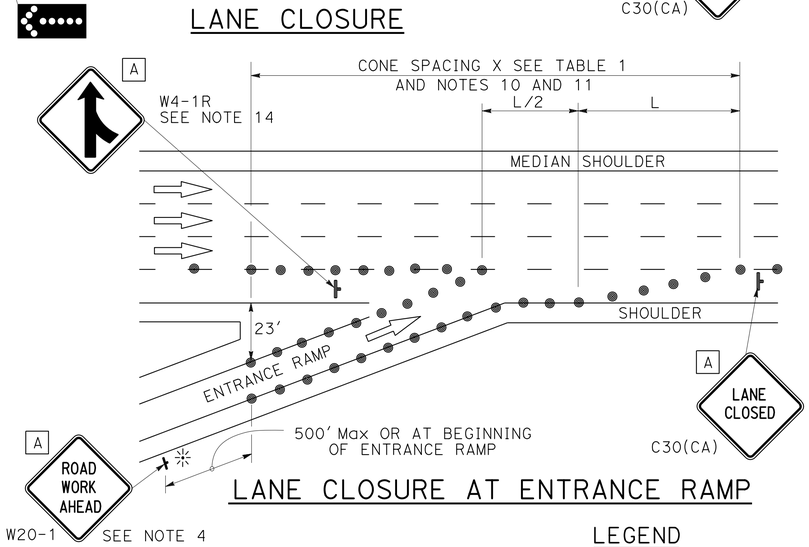

LANE CLOSURE AT ENTRANCE RAMP

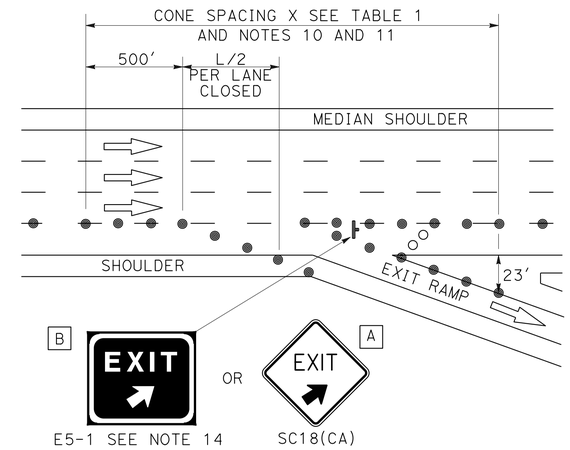

LANE CLOSURE AT EXIT RAMP

NOTES:

1. Median lane closures shall conform to the details as shown except that C20(CA)L and W4-2L signs shall be used.
2. At least one person shall be assigned to provide full time maintenance of traffic control devices for lane closures.
3. Duplicate sign installations are not required:
   a) On opposite shoulder if at least one-half of the available lanes remain open to traffic.
   b) In the median if the width of the median shoulder is less than 8' and the outside lanes are to be closed.
4. Each advance warning sign on each side of the roadway shall be equipped with at least two flags for daytime closure. Each flag shall be at least 16" x 16" in size and shall be orange or fluorescent red-orange in color. Flashing beacons shall be placed at the locations indicated for lane closure during hours of darkness.
5. A G20-2 "END ROAD WORK" sign, with minimum size of 48" x 24" as appropriate, shall be placed at the end of the lane closure unless the end of work area is obvious or ends within a larger project's limits.
6. If the W20-1 sign would follow within 2000' of a stationary W20-1 or G20-1 "ROAD WORK NEXT _____ MILES", use a C20(CA) sign for the first advance warning sign.
7. Place a C30(CA) sign every 2000' throughout length of lane closure.
8. One flashing arrow sign for each lane closed. The flashing arrow signs shall be Type I.
9. A minimum 1500' of sight distance shall be provided where possible for vehicles approaching the first flashing arrow sign. Lane closures shall not begin at top of crest vertical curve or on a horizontal curve.
10. All cones used for lane closures during the hours of darkness shall be fitted with retroreflective bands (or sleeves) as specified in the specifications.
11. Portable delineators, placed at one-half the spacing indicated for traffic cones may be used instead of cones for daytime closures only.
12. Unless otherwise specified in the special provisions, a minimum of 3 cones shall be placed transversely across each closed lane and shoulder at each location where a taper across a traffic lane ends and every 2000' as shown on the "Lane Closure" detail. Two Type II barricades may be used instead of the 3 cones. The transverse alignment of the cones or barricades on the closed shoulder may be shifted from the transverse alignment to provide access to the work.
13. Unless otherwise specified in the special provisions, the 2L tangent shown along lane lines shall be used between the L tapers required for each closed traffic lane.
14. Unless otherwise specified in the special provisions, the E5-1 or SC18(CA) and W4-1 signs shall be used as shown.
15. A W7-3aP "NEXT____ MILES" plaque must be used if theshoulder closure extends beyond the distance that can be perceived by road users.

LEGEND

- TRAFFIC CONE
- TRAFFIC CONE (OPTIONAL TAPER)
- TEMPORARY TRAFFIC CONTROL SIGN
- FLASHING ARROW SIGN (FAS)
- FAS SUPPORT OR TRAILER
- PORTABLE FLASHING BEACON

SIGN PANEL SIZE (Min)

A	48" x 48"
B	72" x 60"
C	36" x 30"

STATE OF CALIFORNIA
DEPARTMENT OF TRANSPORTATION

TRAFFIC CONTROL SYSTEM FOR LANE CLOSURE ON FREEWAYS AND EXPRESSWAYS

NO SCALE

RSP T10 DATED APRIL 19, 2013 SUPERSEDES STANDARD PLAN T10 DATED MAY 20, 2011 - PAGE 237 OF THE STANDARD PLANS BOOK DATED 2010.

REVISED STANDARD PLAN RSP T10

2010 REVISED STANDARD PLAN RSP T10

12-18-12

Dist	COUNTY	ROUTE	POST MILES TOTAL PROJECT	SHEET No.	TOTAL SHEETS
03	Sac	5	23.3	7	57

REGISTERED CIVIL ENGINEER

April 19, 2013
PLANS APPROVAL DATE

REGISTERED PROFESSIONAL ENGINEER Gurinderpal Bhullar No. C48815 Exp. 9-30-14 CIVIL STATE OF CALIFORNIA

THE STATE OF CALIFORNIA OR ITS OFFICERS OR AGENTS SHALL NOT BE RESPONSIBLE FOR THE ACCURACY OR COMPLETENESS OF SCANNED COPIES OF THIS PLAN SHEET.

TO ACCOMPANY PLANS DATED 6-9-14

TYPICAL RAMP CLOSURES

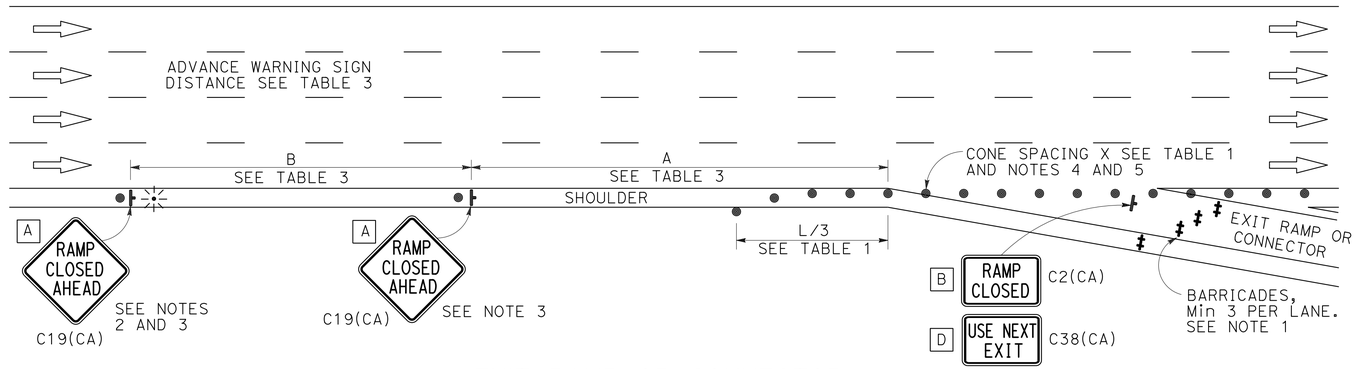

EXIT RAMP OR CONNECTOR

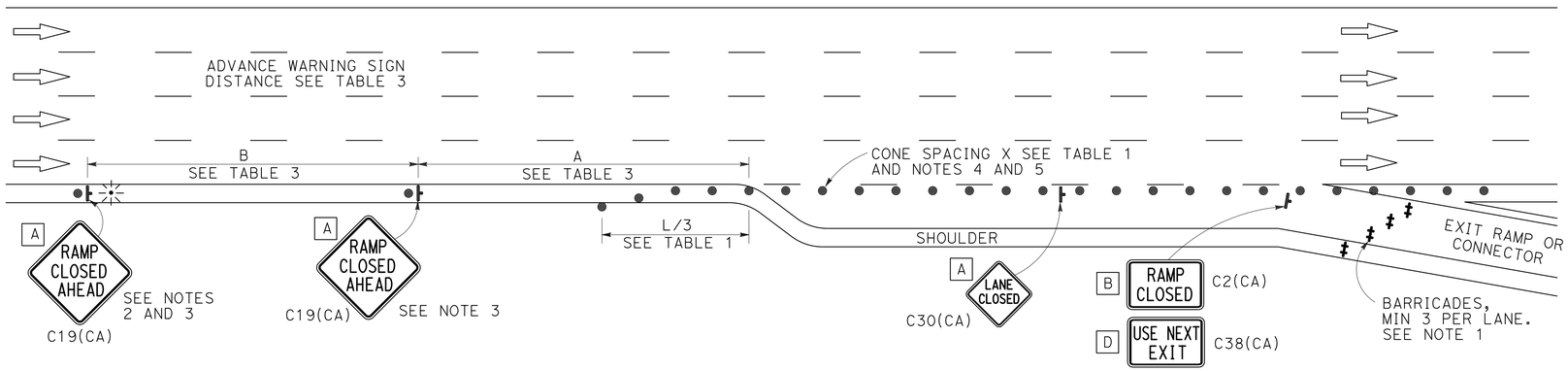

EXIT RAMP OR CONNECTOR WITH ADDITIONAL LANE

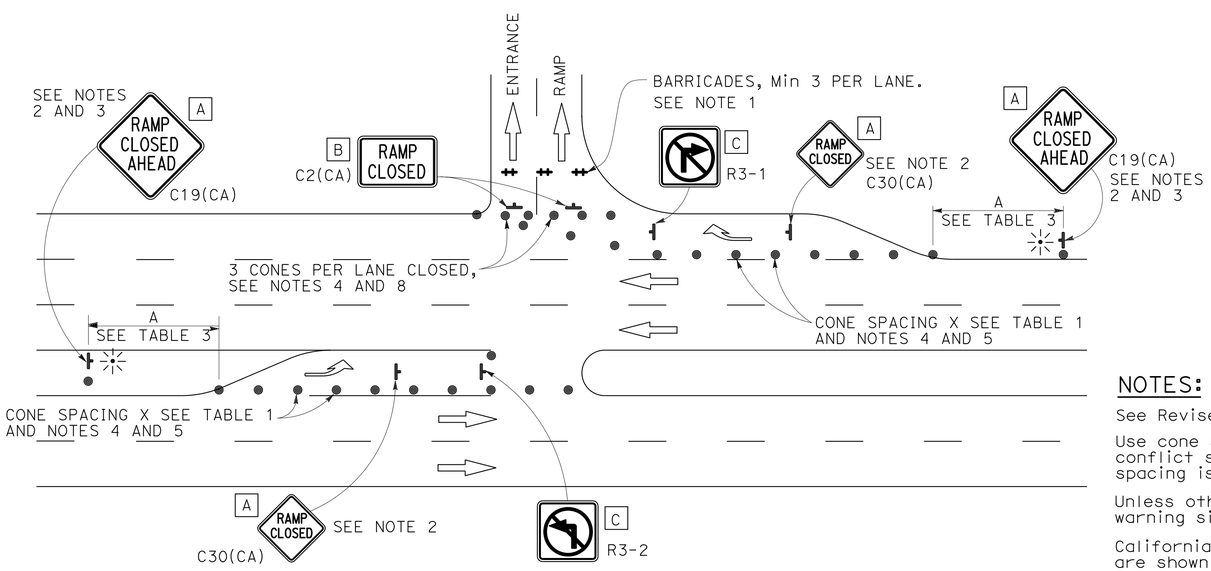

ENTRANCE RAMP WITH TURNING POCKETS

SIGN PANEL SIZE (Min)

- A 48" x 48"
- B 48" x 30"
- C 36" x 36"
- D 48" x 36"

LEGEND

- TRAFFIC CONE
- TEMPORARY TRAFFIC CONTROL SIGN
- BARRICADES
- PORTABLE FLASHING BEACON

NOTES:

1. Barricades shall be Type I, II, or III for closures lasting one week or less and Type III for closures lasting longer than one week.
2. In addition to placing the C19(CA) "RAMP CLOSED AHEAD" and C30(CA) "RAMP CLOSED" signs, black on orange overlay plates with the word "CLOSED" may be mounted, as directed by the Engineer, on all guide signs that refer to the closed ramp. The letter size on the overlay shall be the same as the guide sign.
3. Each advance C19(CA) "RAMP CLOSED AHEAD" sign shall be equipped with at least two flags for daytime closure. Each flag shall be at least 16" x 16" in size and shall be orange or fluorescent red-orange in color. A flashing beacon shall be placed on top of the first C19(CA) sign during hours of darkness.
4. All cones used for ramp closures during the hours of darkness shall be fitted with retroreflective bands (or sleeves) as specified in the specifications.
5. Portable delineators, placed at one-half the spacing indicated for traffic cones, may be used instead of cones for daytime ramp closures only.
6. At least one person shall be assigned to provide full time maintenance of traffic control devices, unless otherwise directed by the Engineer.
7. The existing "EXIT" signs shall be covered during ramp closures.
8. A minimum of 3 cones shall be placed transversely across each closed lane and shoulder.

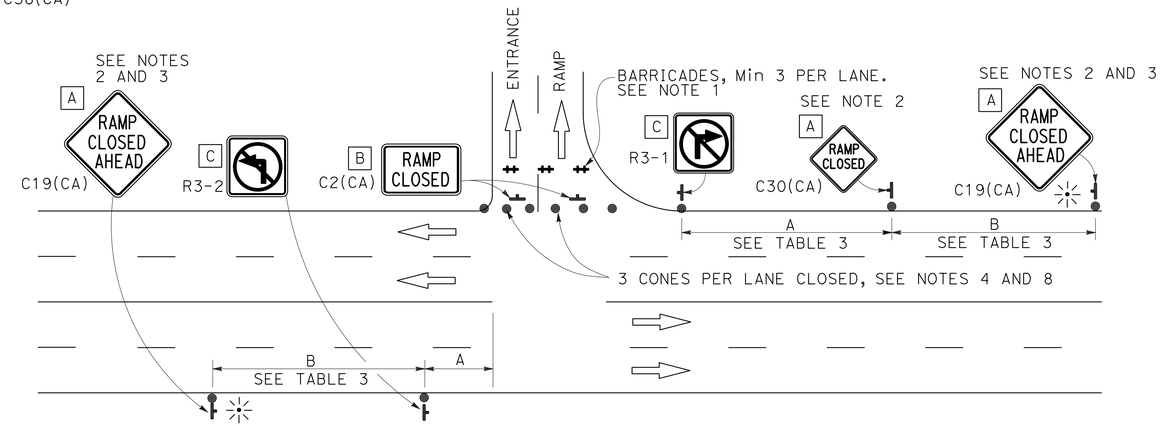

ENTRANCE RAMP WITHOUT TURNING POCKETS

NOTES:

See Revised Standard Plan RSP T9 for tables.

Use cone spacing X for taper segment, Y for tangent segment or Z for conflict situations, as approriate, per Table 1, unless X, Y, or Z cone spacing is shown on this sheet.

Unless otherwise specified in the special provisions, all temporary warning signs shall have black legend on fluorescent orange background.

California codes are designated by (CA). Otherwise, Federal (MUTCD) codes are shown.

STATE OF CALIFORNIA
DEPARTMENT OF TRANSPORTATION

TRAFFIC CONTROL SYSTEM FOR RAMP CLOSURE

NO SCALE

RSP T14 DATED APRIL 19, 2013 SUPERSEDES STANDARD PLAN T14 DATED MAY 20, 2011 - PAGE 242 OF THE STANDARD PLANS BOOK DATED 2010.

REVISED STANDARD PLAN RSP T14

2010 REVISED STANDARD PLAN RSP T14

12-18-12

Dist	COUNTY	ROUTE	POST MILES TOTAL PROJECT	SHEET No.	TOTAL SHEETS
03	Sac	5	23.3	8	57

Theresa Gabriel
REGISTERED ELECTRICAL ENGINEER

July 19, 2013
PLANS APPROVAL DATE

REGISTERED PROFESSIONAL ENGINEER
Theresa Aziz Gabriel
No. E15129
Exp. 6-30-14
ELECTRICAL
STATE OF CALIFORNIA

THE STATE OF CALIFORNIA OR ITS OFFICERS OR AGENTS SHALL NOT BE RESPONSIBLE FOR THE ACCURACY OR COMPLETENESS OF SCANNED COPIES OF THIS PLAN SHEET.

TO ACCOMPANY PLANS DATED 6-9-14

LEGEND:

- AB — ABANDON. IF APPLIED TO CONDUIT, REMOVE CONDUCTORS
- BC — INSTALL PULL BOX IN EXISTING CONDUIT RUN
- BP — PEDESTRIAN BARRICADE, TYPE AS INDICATED ON PLAN
- CB — INSTALL CONDUIT INTO EXISTING PULL BOX
- CC — CONNECT NEW AND EXISTING CONDUIT. REMOVE EXISTING CONDUCTORS AND INSTALL CONDUCTORS AS INDICATED
- CF — CONDUIT TO REMAIN FOR FUTURE USE. REMOVE CONDUCTORS. INSTALL PULL TAPE
- DH — DETECTOR HANDHOLE
- FA — FOUNDATION TO BE ABANDONED
- IS — INSTALL SIGN ON SIGNAL MAST ARM
- NS — NO SLIP BASE ON STANDARD
- PEC — PHOTOELECTRIC CONTROL
- PEU — PHOTOELECTRIC UNIT
- RC — EQUIPMENT OR MATERIAL TO BE REMOVED AND BECOME THE PROPERTY OF THE CONTRACTOR
- RE — REMOVE ELECTROLIER, FUSES AND BALLAST. TAPE ENDS OF CONDUCTORS
- RL — RELOCATE EQUIPMENT
- RR — REMOVE AND REUSE EQUIPMENT
- RS — REMOVE AND SALVAGE EQUIPMENT
- SC — SPLICE NEW TO EXISTING CONDUCTORS
- SD — SERVICE DISCONNECT
- TSP — TELEPHONE SERVICE POINT

ABBREVIATIONS

APS	ACCESSIBLE PEDESTRIAN SIGNAL
BBS	BATTERY BACKUP SYSTEM
BC	BOLT CIRCLE
BPB	BICYCLE PUSH BUTTON
C	CONDUIT
CB	CIRCUIT BREAKER
CCTV	CLOSED CIRCUIT TELEVISION
Ckt	CIRCUIT
CMS	CHANGEABLE MESSAGE SIGN
Ctid	CALTRANS IDENTIFICATION
Comm	COMMUNICATION
DLC	LOOP DETECTOR LEAD-IN CABLE
EMS	EXTINGUISHABLE MESSAGE SIGN
EVUC	EMERGENCY VEHICLE UNIT CABLE
EVUD	EMERGENCY VEHICLE UNIT DETECTOR
FB	FLASHING BEACON
FBCA	FLASHING BEACON CONTROL ASSEMBLY
FBS	FLASHING BEACON WITH SLIP BASE
FO	FIBER OPTIC
G	EQUIPMENT GROUNDING CONDUCTOR
GB	GROUND BUS
GFCI	GROUND FAULT CIRCUIT INTERRUPTER
HAR	HIGHWAY ADVISORY RADIO
Hex	HEXAGONAL
HPS	HIGH PRESSURE SODIUM
IISNS	INTERNALLY ILLUMINATED STREET NAME SIGN
ISL	INDUCTION SIGN LIGHTING
LED	LIGHT EMITTING DIODE
LMA	LUMINAIRE MAST ARM
LPS	LOW PRESSURE SODIUM
Ltg	LIGHTING
Lum	LUMINAIRE
M	METERED
MAT	MAST ARM MOUNTING TOP ATTACHMENT
MAS	MAST ARM MOUNTING SIDE ATTACHMENT
M/M	MULTIPLE TO MULTIPLE TRANSFORMER
Mtg	MOUNTING
MV	MERCURY VAPOR LIGHTING FIXTURE
MVDS	MICROWAVE VEHICLE DETECTION SYSTEM
N	NEUTRAL (GROUNDED CONDUCTOR)
NB	NEUTRAL BUS
NC	NORMALLY CLOSE
NO	NORMALLY OPEN
P	CIRCUIT BREAKER'S POLE
PB	PULL BOX
PBA	PUSH BUTTON ASSEMBLY
PEC	PHOTOELECTRIC CONTROL
Ped	PEDESTRIAN
PEU	PHOTOELECTRIC UNIT
PT	CONDUIT WITH PULL TAPE
RE	RELOCATED EQUIPMENT
RM	RAMP METERING
RWIS	ROADSIDE WEATHER INFORMATION SYSTEM
SB	SLIP BASE
SIC	SIGNAL INTERCONNECT CABLE
Sig	SIGNAL
SMA	SIGNAL MAST ARM
SNS	STREET NAME SIGN
SP	SERVICE POINT
TDC	TELEPHONE DEMARCATION CABINET
TMS	TRAFFIC MONITORING STATION
TOS	TRAFFIC OPERATIONS SYSTEM
Veh	VEHICLE
VIVDS	VIDEO IMAGE VEHICLE DETECTION SYSTEM
WIM	WEIGH-IN-MOTION
Xfmr	TRANSFORMER

SOFFIT AND WALL MOUNTED LUMINAIRES

- PENDANT, 70 W HPS UNLESS OTHERWISE SPECIFIED
- FLUSH, 70 W HPS UNLESS OTHERWISE SPECIFIED
- WALL SURFACE, 70 W HPS UNLESS OTHERWISE SPECIFIED
- EXISTING SOFFIT OR WALL LUMINAIRE TO REMAIN UNMODIFIED
- EXISTING SOFFIT OR WALL LUMINAIRE TO BE MODIFIED AS SPECIFIED

NOTE:
Arrow indicates "street side" of luminaire.

COMMONLY USED SYMBOLS FOR UNITED STATES CUSTOMARY UNITS OF MEASUREMENT:

SYMBOL USED	DEFINITIONS
Ω	OHMS
min	MINUTE
s	SECOND
bps	BITS PER SECOND
Bps	BYTES PER SECOND
A	AMPERE
V	VOLT
V(dc)	VOLT (DIRECT CURRENT)
V(ac)	VOLT (ALTERNATING CURRENT)
FC	FOOT - CANDLE
W	WATTS
VA	VOLT-AMPERE
M	MEGA
k	KILO
m	MILLI
μ	MICRO
P	PICO
Hz	HERTZ

MISCELLANEOUS ELECTROLIERS

NEW	EXISTING	
		LUMINAIRE ON WOOD POLE
		NON-STANDARD ELECTROLIER (SEE PROJECT NOTES OR PROJECT PLANS)
		CITY ELECTROLIER
		ELECTROLIER FOUNDATION (FUTURE INSTALLATION)

NOTES:

1. HPS luminaires shall be 310 W HPS when installed on Type 21, 21D, 30, 31 and 32 Standards, unless otherwise specified. HPS luminaires shall be 200 W when installed on other type standards or poles, unless otherwise specified.
2. LED luminaires shall be 235 W when installed on Type 21, 21D, 30, 31 and 32 Standards, unless otherwise specified. LED luminaires shall be 165 W when installed on other type standards or poles, unless otherwise specified.
3. Luminaires shall be the cutoff type, ANSI Type III medium cutoff lighting distribution, unless otherwise specified.

STANDARD ELECTROLIER

NEW	EXISTING	STANDARD TYPE
		15
		15D
		15 STRUCTURE
		15D STRUCTURE
		21
		21D
		21 STRUCTURE
		21D STRUCTURE
		30
		31
		32

STATE OF CALIFORNIA
DEPARTMENT OF TRANSPORTATION

ELECTRICAL SYSTEMS (LEGEND AND ABBREVIATIONS)

NO SCALE

RSP ES-1A DATED JULY 19, 2013 SUPERSEDES STANDARD PLAN ES-1A DATED MAY 20, 2011 - PAGE 425 OF THE STANDARD PLANS BOOK DATED 2010.

REVISED STANDARD PLAN RSP ES-1A

2010 REVISED STANDARD PLAN RSP ES-1A

DIST	COUNTY	ROUTE	POST MILES TOTAL PROJECT	SHEET NO.	TOTAL SHEETS
03	Sac	5	23.3	9	57

Theresa Gabriel
REGISTERED ELECTRICAL ENGINEER

July 19, 2013
PLANS APPROVAL DATE

REGISTERED PROFESSIONAL ENGINEER Theresa Aziz Gabriel No. E15129 Exp. 6-30-14 ELECTRICAL STATE OF CALIFORNIA

THE STATE OF CALIFORNIA OR ITS OFFICERS OR AGENTS SHALL NOT BE RESPONSIBLE FOR THE ACCURACY OR COMPLETENESS OF SCANNED COPIES OF THIS PLAN SHEET.

TO ACCOMPANY PLANS DATED 6-9-14

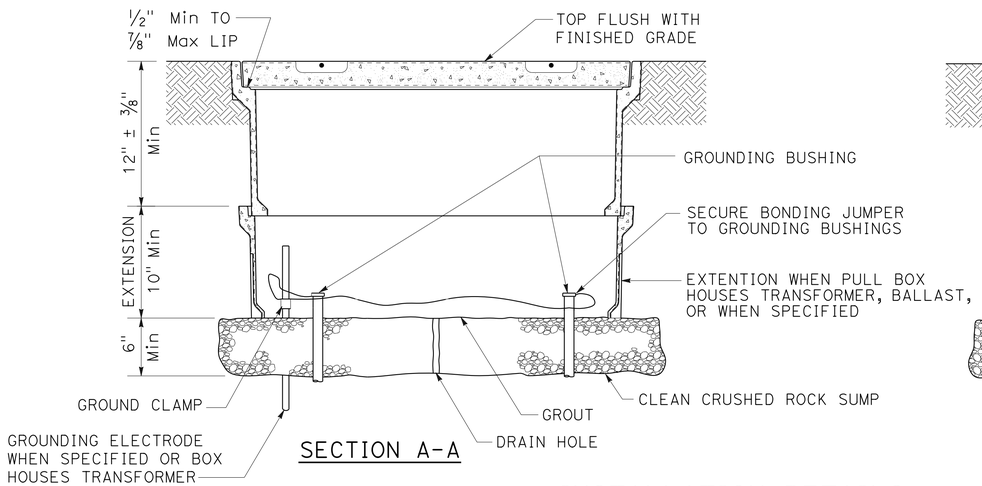

SECTION A-A

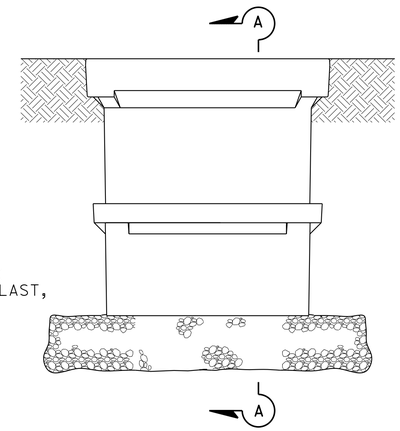

SIDE VIEW

INSTALLATION DETAILS

DETAIL A

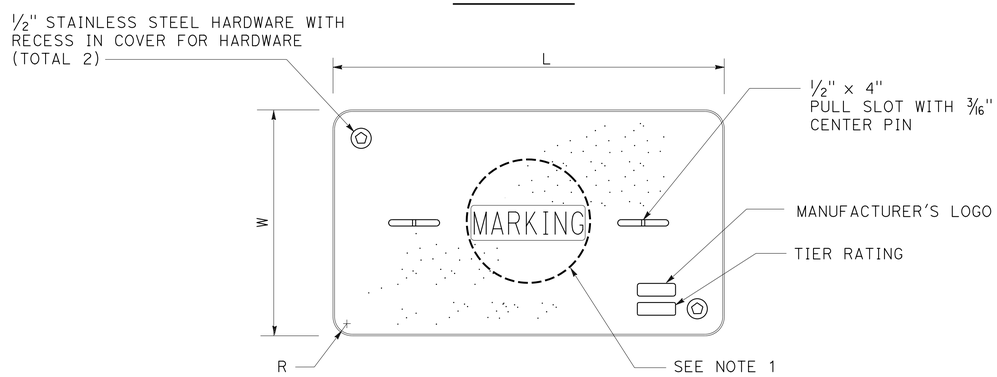

COVER TOP VIEW

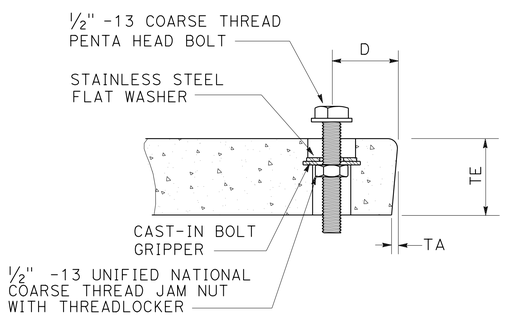

TYPICAL COVER CAPTIVE BOLT

OR SIMILAR

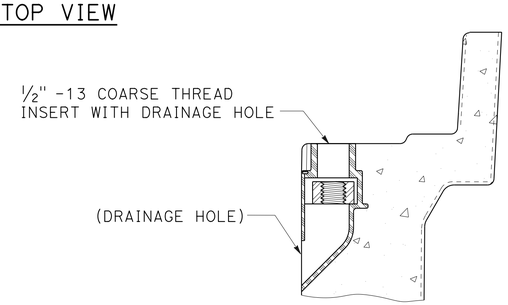

TYPICAL THREADED INSERT

OR SIMILAR

DIMENSION TABLE										
	PULL BOX			COVER						
PULL BOX	MINIMUM DEPTH BOX	MINIMUM DEPTH EXTENSION	MAXIMUM WEIGHT	L	W	R	TE	TA	D	MAXIMUM WEIGHT
No. 3 1/2	12"	N/A	40 lb	1' - 3 3/8"	10 1/8"	1 3/8"	2"	1/8"	1 3/4"	30 lb
No. 5	12"	10"	55 lb	1' - 11 1/4"	1' - 1 3/4"	1 3/8"	2"	1/8"	1 3/4"	60 lb
No. 6	12"	10"	70 lb	2' - 6 1/2"	1' - 5 1/2"	1 3/8"	2"	1/8"	2"	85 lb

NOTES:

1. Pull box covers shall be marked as follows: "SERVICE" Service circuits between service point and service disconnect; "SPRINKLER-CONTROL" sprinkler control circuits, 50 V or less; "CALTRANS" on all pull boxes, except pull boxes marked "SPRINKLER-CONTROL"; and "TELEPHONE" Telephone service;
   - A) No. 3 1/2 pull box.
     - 1) "SIGNAL" - Traffic signal circuits with or without lighting or sign lighting circuits.
     - 2) "LIGHTING" - Lighting or sign lighting circuits where voltage is under 600 V.
   - B) No. 5, 6, 9 or 9A pull box.
     - 1) "TRAFFIC SIGNAL" - Traffic signal circuits with or without lighting or sign lighting circuits.
     - 2) "LIGHTING" - Lighting or sign lighting circuits where voltage is under 600 V.
     - 3) "LIGHTING-HIGH VOLTAGE" - Lighting or sign lighting circuits where voltage is above 600 V.
     - 4) "IRRIGATION" - Circuits to irrigation controller 120 V or more.
     - 5) "RAMP METER" - Ramp meter circuits.
     - 6) "COUNT STATION" - Count or speed monitor circuits.
     - 7) "COMMUNICATIONS" - Communication circuits.
     - 8) "TOS COMMUNICATIONS" - TOS communication line.
     - 9) "TOS POWER" - TOS power.
     - 10) "TDC POWER" - Telephone demarcation cabinet power.
     - 11) "CCTV" - Closed circuit television circuits.
     - 12) "TMS" - Traffic monitoring station circuits.
     - 13) "CMS" - Changeable message sign circuits.
     - 14) "HAR" - Highway advisory radio circuits.
     - 15) "BOOSTER PUMP" - Booster pump circuit.
2. The nominal dimensions of the opening in which the cover sets shall be the same as the cover dimensions except the length and width dimensions shall be 1/8" greater.
3. Covers and boxes shall be interchangeable with California standard male and female gages. When interchanged with a standard male or female gage, the top surfaces shall be flush within 1/8". Top outside radius of covers and pull boxes shall have a 1/8" radius.
4. Pull box extension may be another pull box as long as the bottom edge of the pull box can fit into the cover opening.
5. All dimensions for the cover for non-traffic pull box are nominal values.

STATE OF CALIFORNIA
DEPARTMENT OF TRANSPORTATION

ELECTRICAL SYSTEMS (NON-TRAFFIC PULL BOX)

NO SCALE

RSP ES-8A DATED JULY 19, 2013 SUPERSEDES RSP ES-8A DATED JANUARY 20, 2012 THAT SUPPLEMENTS THE STANDARD PLANS BOOK DATED 2010.

REVISED STANDARD PLAN RSP ES-8A

2010 REVISED STANDARD PLAN RSP ES-8A

Dist	COUNTY	ROUTE	POST MILES TOTAL PROJECT	SHEET No.	TOTAL SHEETS
03	Sac	5	23.3	10	57

CALIFORNIA STATE FIRE MARSHAL APPROVED FIRE AND PANIC ONLY
Approval of this plan does not authorize or approve any omission or deviation from applicable regulations. Final approval is subject to field inspection. One set of approved plans shall be available on the project site at all times.
Reviewed by: FRANCIS SOLICH
Approval date: 02-05-14
CSFM File No. 01-34-11-0399

Michael R. White 4/1/2014
REGISTERED MECHANICAL ENGINEER DATE

6-9-14
PLANS APPROVAL DATE

REGISTERED PROFESSIONAL ENGINEER Michael R. White No. 29108 Exp. 06-30-14 MECH STATE OF CALIFORNIA

The State of California or its officers or agents shall not be responsible for the accuracy or completeness of scanned copies of this plan sheet.

INDEX OF SHEETS

SHEET	DESCRIPTION
GP	EXISTING GENERAL PLAN

STRUCTURAL

ST-1	LEGEND
ST-2	CONCRETE STANDARD
STI-0	DESIGN NOTES
STI-1	REMOVAL & EXCAVATION PLAN
STI-2	EXISTING REMOVAL SECTIONS
STI-3	REMOVAL SECTION
STI-4	NEW ACCESS STAIRS PLAN
STI-5	ACCESS STAIRS & LANDING SECTION
STI-6	ACCESS STAIRS & LANDING SECTION
STI-7	STAIRS EXCAVATION SECTIONS
STI-8	MISCELLANEOUS DETAILS NO. 1
STI-9	MISCELLANEOUS DETAILS NO. 2
STI-10	MUFFLER ENCLOSURE PLAN & SECTION
STI-11	MUFFLER ENCLOSURE SECTION & DETAILS
STI-12	GRATE DETAILS
ST-13	MUFFLER ENCLOSURE OPENING FRAMING DETAILS
ST-14	LADDER DETAILS

MECHANICAL

M-0	DESIGN NOTES
M-1	WET SIDE PIPES & TEMPORARY PUMPS
M-2	PIPE PENETRATIONS
M-3	EXISTING PUMP REMOVAL
M-4	NEW PUMPING EQUIPMENT
M-5	EQUIPMENT LIFTING SYSTEM 1
M-6	EQUIPMENT LIFTING SYSTEM 2
M-7	NEW VENTILATION SYSTEM
M-8	EXISTING GENERATOR REMOVAL
M-9	NEW GENERATOR INSTALLATION
M-10	STAIRWELL ACCESS COVER LOCK DETAILS
M-11	STAIRWELL ACCESS COVER DRAIN DETAILS
M-12	MUFFLER ENCLOSURE DRAIN
M-13	DRY PIT SUMP PUMP
M-14	DISCHARGE GATE VALVE AREA
M-15	TEMPORARY PUMP REMOVAL & NEW PIPING
M-16	FALL PROTECTION SYSTEMS

ELECTRICAL

EE-0	LEGEND
EE-1	NOTES AND ABBREVIATIONS
EE-2	EXISTING SITE PLAN
EE-3	PUMP HOUSE POWER AND LIGHTING PLAN
EE-4	PUMP HOUSE SECTION AND DETAILS
EE-5	DETAILS
EE-6	POWER SCHEMATIC DIAGRAM
EE-7	CONTROL SCHEMATIC DIAGRAM-1
EE-8	CONTROL SCHEMATIC DIAGRAM-2
EE-9	PUMP CONTROL ROOM MCC ELEVATION
EE-10	GENERATOR ROOM MCC ELEVATION
EE-11	TEMPORARY PUMPS POWER AND CONTROL PLAN
EE-12	WIRELESS NETWORK DETAIL

QUANTITIES

BRIDGE REMOVAL (PORTION)	LS
STRUCTURE EXCAVATION (PUMPING PLANT)	42 CY
STRUCTURE BACKFILL (PUMPING PLANT)	15 CY
STRUCTURAL CONCRETE (PUMPING PLANT)	21 CY
DRILL AND BOND DOWEL	85 LF
BAR REINFORCING STEEL (PUMPING PLANT)	3,503 LB
STRUCTURAL STEEL (BRIDGE)	408 LB
PUMPING PLANT EQUIPMENT	LS
PUMPING PLANT ELECTRICAL EQUIPMENT	LS
FALL PROTECTION SYSTEM	LS

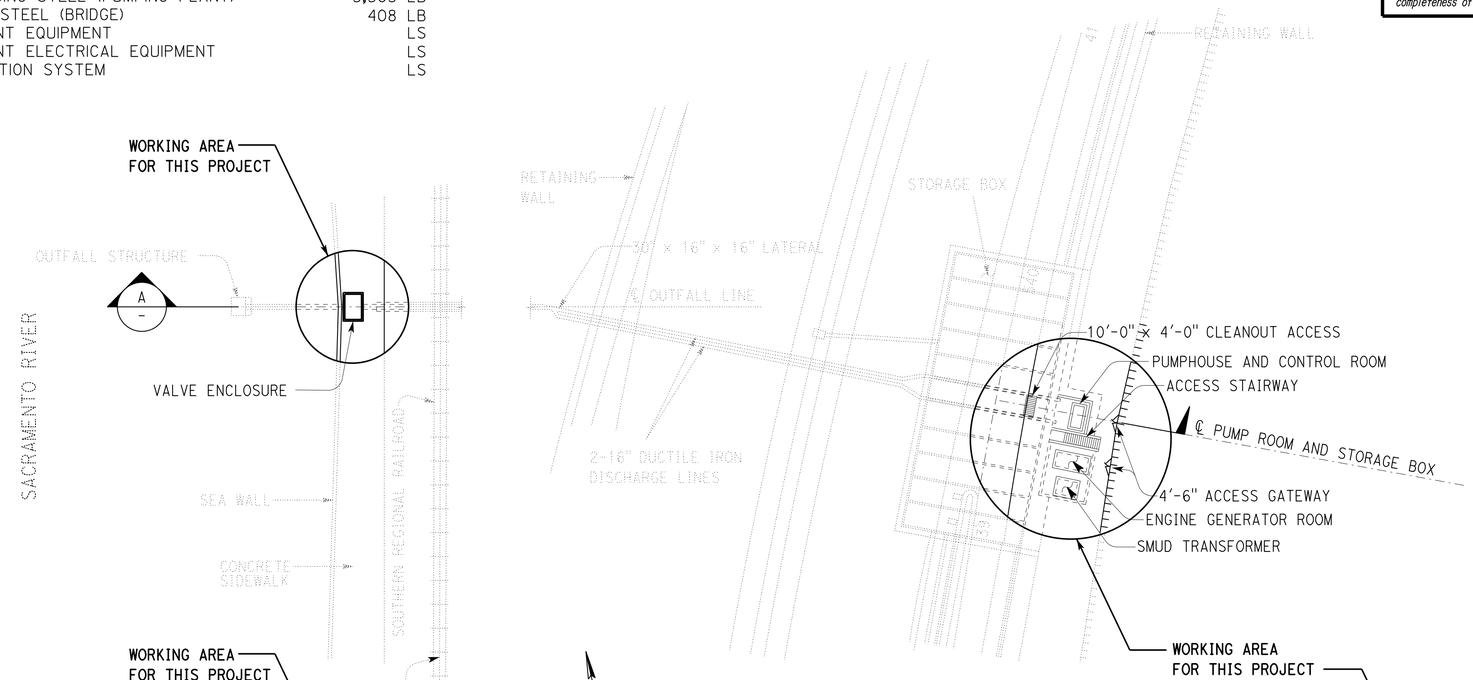

PLAN

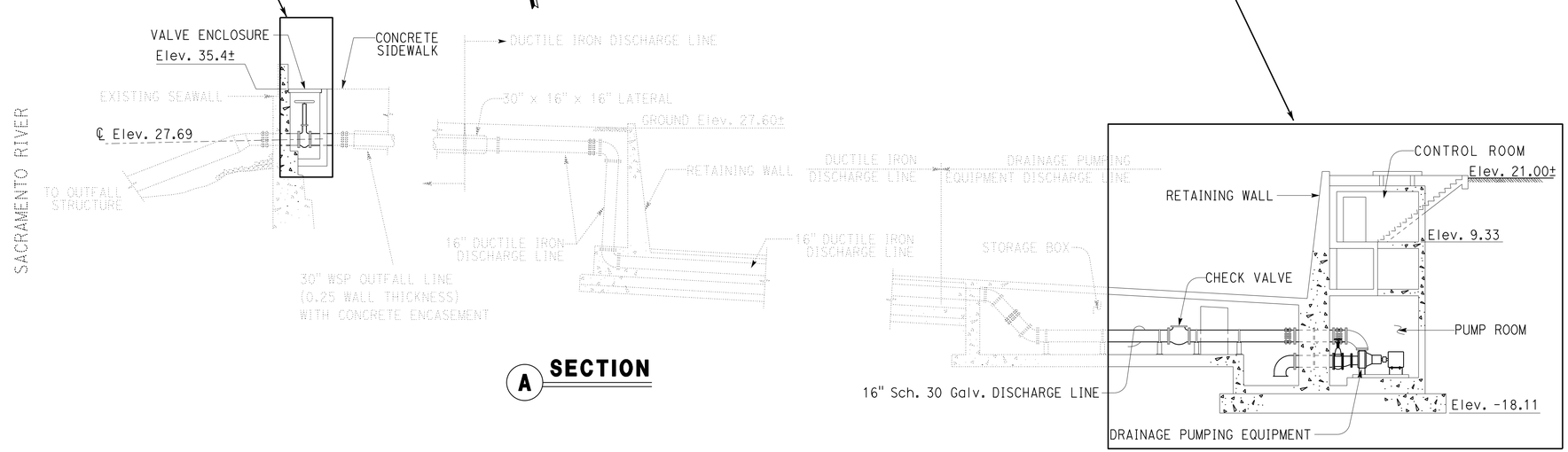

A SECTION

DESIGN SUPERVISOR	DESIGN	BY Michael White	CHECKED Alan M Torres
DESIGN ENGINEER	DETAILS	BY Michael White	CHECKED Alan M Torres
	QUANTITIES	BY Michael White	CHECKED Alan M Torres

STATE OF CALIFORNIA
DEPARTMENT OF TRANSPORTATION

DIVISION OF ENGINEERING SERVICES
ELECTRICAL-MECHANICAL-WATER AND WASTEWATER DESIGN

BRIDGE NO. 24-0273W
POST MILE 23.3

"O" STREET PUMPING PLANT
PUMP PLANT | EXISTING GENERAL PLAN

SHEET GP

TAEMWW Imperial - CCSC Rev. 01/13

ORIGINAL SCALE IN INCHES FOR REDUCED PLANS 0 1 2 3

UNIT: 3618 CONTRACT No.: 3F0401
PROJECT NUMBER & PHASE: 03120000581

DISREGARD PRINTS BEARING EARLIER REVISION DATES → REVISION DATES (PRELIMINARY STAGE ONLY) 11-01-13 11-15-13 12-06-13 12-16-13 1-13-14 3-14-14 SHEET OF

12-JUN-2014 10:32
P:\dist_03\0312000058_o_st_pump_house_rehab\expedite\gp.dgn

DIST.	COUNTY	ROUTE	POST MILES TOTAL PROJECT	SHEET NO.	TOTAL SHEETS
03	Sac	5	23.3	11	57

REGISTERED CIVIL ENGINEER DATE

REGISTERED PROFESSIONAL ENGINEER Tom R. Mesich No. 46748 Exp. 6-30-15 CIVIL STATE OF CALIFORNIA

6-9-14
PLANS APPROVAL DATE

The State of California or its officers or agents shall not be responsible for the accuracy or completeness of electronic copies of this plan sheet.

ABBREVIATIONS

AAD	ADHESIVE ANCHORAGE DEVICE
AB	ANCHOR BOLT
AC	ASPHALT CONCRETE
Alt	ALTERNATE
APA	AMERICAN PLYWOOD ASSOCIATION
APC	ALTERNATIVE PIPE CULVERT
Bldg	BUILDING
Blkg	BLOCKING
BN	BOUNDARY NAILING
Btm	BOTTOM
CB	CARRIAGE BOLT
CIDH	CAST IN DRILLED HOLE
CJ	CONTROL JOINT
Clr	CLEAR
CMU	CONCRETE MASONRY UNIT
Conc	CONCRETE
Const	CONSTRUCTION
Cont	CONTINUOUS
CP	COMPLETE PENETRATION WELD
Dbl	DOUBLE
DF	DOUGLAS FIR
Dia	DIAMETER
DIP	DUSTILE IRON PIPE
DN	DIAMETER NOMINAL
do	DITTO
(E)	EXISTING
Ea	EACH
EL	ELEVATION
Elec	ELECTRICAL
Embed	EMBEDMENT
EN	EDGE NAIL
Eq	EQUAL
Exp	EXPANSION
FDGM	FREE DRAINING GRANULAR MATERIAL
FG	FINISH GRADE
FL	FLOW LINE
Flr	FLOOR
FN	FACE (FIELD) NAIL
FOC	FACE OF CONCRETE
FOM	FACE OF MASONRY
FOS	FACE OF STUD
Ftg	FOOTING
Ga	GAGE
Galv	GALVANIZED
GLM	GLUE LAMINATED MEMBER
Gyp Bd	GYPSUM BOARD
GWT	GROUND WATER TABLE
HD	HOLDOWN
Hex	HEXAGON
Horiz	HORIZONTAL
HSB	HIGH STRENGTH BOLT
HSS	HOLLOW STRUCTURAL SECTION
Jt	JOINT
LOL	LAYOUT LINE
LVL	LAMINATED VENEER LUMBER
m	METER
Max	MAXIMUM
MEA	MECHANICAL EXPANSION ANCHOR
Mech	MECHANICAL
Mfr	MANUFACTURER
mm	MILLIMETER
Min	MINIMUM
MIW	MALLEABLE IRON WASHER
OC	ON CENTER
OG	ORIGINAL GRADE
OH	OPPOSITE HAND
Opt	OPTIONAL
P	PITCH
PDF	POWER DRIVEN FASTENER
Plwd	PLYWOOD
PT	PRESSURE TREATED
PW	PUDDLE WELD
PWB	PREFABRICATED WOOD I BEAM
RCP	REINFORCED CONCRETE PIPE
Reinf	REINFORCED, REINFORCING
Req'd	REQUIRED
SDSTS	SELF DRILL, SELF TAP SCREW
Sim	SIMILAR
SPS	STRUCTURAL PLYWOOD SHEATHING
Sq	SQUARE
Stagg	STAGGERED
Std	STANDARD
SW	STUD WELD
Sym	SYMMETRICAL
T&G	TONGUE-AND-GROOVE
TN	TOE NAIL
TS	TUBE STEEL
Typ	TYPICAL
UON	UNLESS OTHERWISE NOTED
Vert	VERTICAL

SYMBOLS

BLOCKING IN SECTION OR ELEVATION

CONTINUOUS MEMBER IN SECTION

END OF MEMBER

BEARING WALL

SHEAR WALL

X XXXX — LENGTH; SHEARWALL SCHEDULE SYMBOL; REFERENCE

GLUE LAMINATED MEMBER SECTION

NORTH ARROW

X STX-X — PARTIAL SECTION CUT

X STX-X — FULL SECTION CUT

X — REVISION CALLOUT

A — GRID LINE INDICATOR

℄ CENTER LINE

℘ STATION LINE

ℙ STEEL PLATE

Ø DIAMETER

⌑ SQUARE

CMU WALL ON PLAN VIEWS

DROPPED SLAB ON PLAN VIEWS

REINFORCED CONCRETE

SAND

ORIGINAL GROUND

LIMITS OF EXCAVATION OR STRUCTURE BACKFILL

FREE DRAINING GRANULAR MATERIAL

X — BOTTOM OF FOOTING

ELEVATION OR WORKING POINT

EXISTING FEATURES

HOLDOWN, Typ
Simpson
USP
Equal
(MANUFACTURERS ARE THOSE NOTED IN THE ORDER SHOWN)

FRAME CONNECTOR
Simpson
USP
Equal
(MANUFACTURERS ARE THOSE NOTED IN THE ORDER SHOWN)

3 5b ST-1 — DETAIL NUMBER OR NOTE NUMBER; ADDITIONAL REFERENCE (IF REQUIRED); SHEET NUMBER

DESIGN	BY Tom Mesich	CHECKED Dai Lu
DETAILS	BY Pete von Savoye	CHECKED Dai Lu
QUANTITIES	BY Tom Mesich	CHECKED Dai Lu

STATE OF CALIFORNIA
DEPARTMENT OF TRANSPORTATION

DIVISION OF ENGINEERING SERVICES
ARCHITECTURAL AND STRUCTURAL DESIGN

BRIDGE NO. 24-0273W
POST MILE 23.3

"O" STREET PUMPING PLANT
PUMP PLANT
LEGEND

SHEET ST-1

TAEMWW Imperial Rev. 7/10

ORIGINAL SCALE IN INCHES FOR REDUCED PLANS 0 1 2 3

UNIT 3599
PROJECT NUMBER & PHASE 03120000581
EA 3F0400

DISREGARD PRINTS BEARING EARLIER REVISION DATES → 02-18-14

REVISION DATES (PRELIMINARY STAGE ONLY) SHEET OF

P:\dist_03\0312000058_o_st_pump_house_rehab\expedite\st0_01.dgn

12-JUN-2014 10:32

DIST.	COUNTY	ROUTE	POST MILES TOTAL PROJECT	SHEET NO.	TOTAL SHEETS
03	Sac	5	23.3	12	57

REGISTERED CIVIL ENGINEER DATE

REGISTERED PROFESSIONAL ENGINEER Tom R. Mesich No. 46748 Exp. 6-30-15 CIVIL STATE OF CALIFORNIA

6-9-14
PLANS APPROVAL DATE

The State of California or its officers or agents shall not be responsible for the accuracy or completeness of scanned copies of this plan sheet.

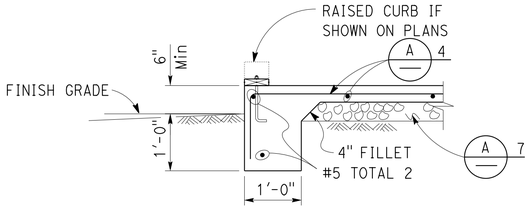

1 EXTERIOR FOOTING
NO SCALE

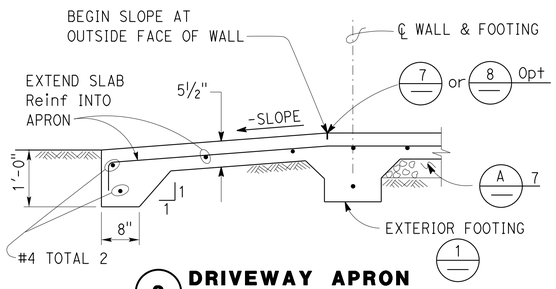

2 DRIVEWAY APRON
NO SCALE

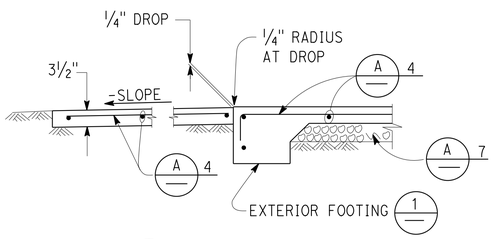

3 WALKWAY APRON
NO SCALE

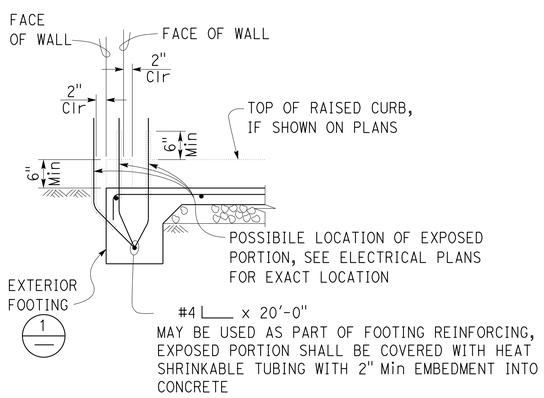

4 GROUND BAR DETAIL
NO SCALE

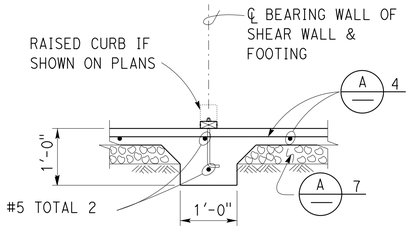

5 INTERIOR FOOTING
NO SCALE

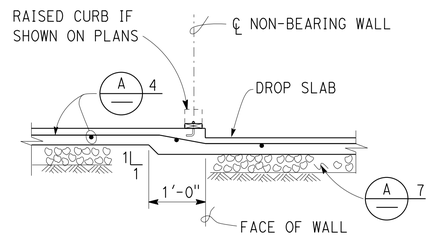

6 DROP SLAB AT NON-BEARING WALL
NO SCALE

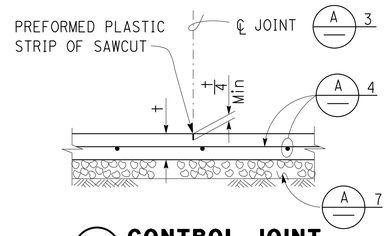

7 CONTROL JOINT
NO SCALE

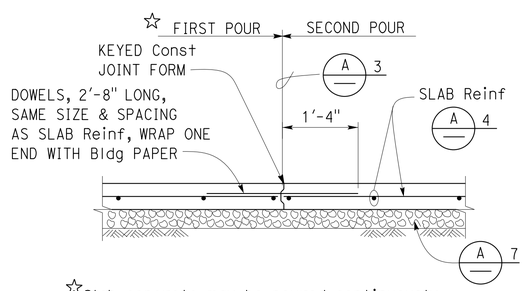

☆Slab concrete may be poured continuously across the Control Joint, to cover as large an area as practical.

8 CONTRACTION JOINT
NO SCALE

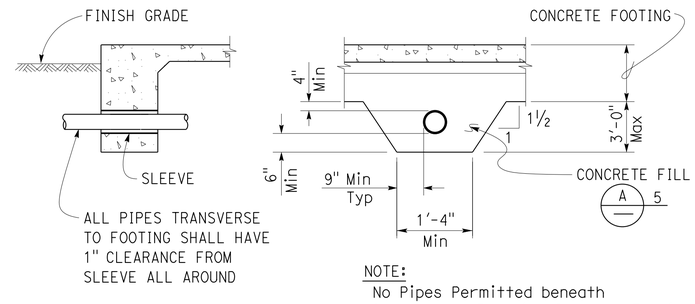

NOTE:
No Pipes Permitted beneath Interior or Exterior Isolated Footing.

9 PIPE DETAILS THROUGH FOOTING
NO SCALE

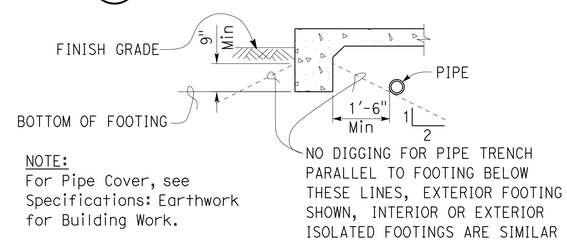

NOTE:
For Pipe Cover, see Specifications: Earthwork for Building Work.

10 PIPE DETAILS PARALLEL TO FOOTING
NO SCALE

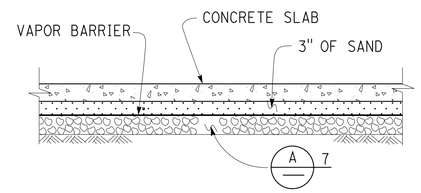

11 MOISTURE BARRIER
NO SCALE

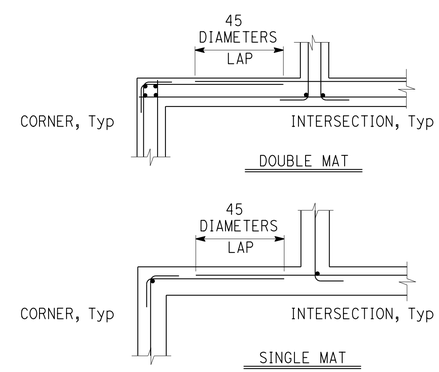

12 CORNER/INTERSECTION REINF SPLICE
NO SCALE

A CONCRETE NOTES

1. The following minimum concrete cover shall be provided for reinforcement.

	Minimum Cover
a. Concrete cast against and permanently exposed to earth	3"
b. Concrete exposed to earth or weather but cast in forms:	
#6 thru #18 bars	2"
#5 bar and smaller, W31 or D31 Wire, and smaller	1½"
c. Concrete not exposed to weather or in contact with ground: Slabs, Walls and Joists:	
#14 and #18 Bar	1½"
#11 Bar and smaller	¾"
Beams and Columns: Primary Reinforcement, Ties, Stirrups and Spirals	1½"

2. Splices in continuous reinforcement as in Walls, Wall Footings, etc. #8 or smaller shall have a lap of 45 diameters and the splices in adjacent bars shall not be less than 5'-0" apart.

   Continuous Bars in spandrels, Wall Beams, etc. shall lap Top Bars at center of span and Bottom Bars at supports.

3. Contraction Joints and Control Joints shall divide slab into areas not exceeding 25 square yards without reentrant corners and with length to width ratios not exceeding 1.5 to 1. Joint spacing shall not exceed 15'-0".

4.

Slab Thickness (t)	Reinforcement
3½"	#3 @ 18 Each way, place in center of Slab
5½"	#4 @ 18 Each way, place in center of Slab

5. Concrete fill is to be placed before Footing is poured. Make the same width as the Footing and the full width of the Pipe trench. Concrete fill not required for pipes less than 2" diameter for pipes more than 3'-0" below bottom of footing.

6. See Mechanical and Architectural Plans for size and locations of pipe, vents, ducts and other similar openings. See Electrical Plans for conduits and outlet boxes in floors, walls, etc.

7. Place 4" of free draining granular material under slabs.

NOTE: SPECIFIC DETAILS OR NOTES ON OTHER SHEETS SHALL PREVAIL OVER STANDARD DETAILS AND NOTES ON THIS SHEET

STANDARD DRAWING

FILE NO. XS-25-1 | DRAWING DATE 1-04 | DESIGN BY Sean Sanoll | DETAILS BY Peter F. von Sauvage, III | SUBMITTED BY Sean Sanoll, DESIGN ENGINEER | CHECKED Lee Sanders | CHECKED Sean Sanoll | APPROVED R E Travis DESIGN SUPERVISOR

STATE OF CALIFORNIA DEPARTMENT OF TRANSPORTATION

DIVISION OF ENGINEERING SERVICES ARCHITECTURAL AND STRUCTURAL DESIGN

BRIDGE NO. 24-0273W | POST MILE 23.3

"O" STREET PUMPING PLANT

CONCRETE STANDARD

SHEET ST-2

TAEMWW Imperial Rev. 7/10

SCALE: ALL DIMENSIONS ARE IN MILLIMETERS UNLESS OTHERWISE NOTED.

ORIGINAL SCALE IN INCHES FOR REDUCED PLANS 0 1 2 3

UNIT 3599
PROJECT NUMBER & PHASE 03120000581
EA 3F0400

DISREGARD PRINTS BEARING EARLIER REVISION DATES → 1-16-04 11-14-05 04-27-12 08-24-12

REVISION DATES (PRELIMINARY STAGE ONLY) SHEET OF

12-JUN-2014 10:32

st0_02.dgn

DIST.	COUNTY	ROUTE	POST MILES TOTAL PROJECT	SHEET NO.	TOTAL SHEETS
03	Sac	5	23.3	13	57

REGISTERED CIVIL ENGINEER DATE

REGISTERED PROFESSIONAL ENGINEER Tom R. Mesich No. 46748 Exp. 6-30-15 CIVIL STATE OF CALIFORNIA

6-9-14
PLANS APPROVAL DATE

The State of California or its officers or agents shall not be responsible for the accuracy or completeness of electronic copies of this plan sheet.

A PUMPING PLANT DESIGN NOTES

I. Design: AASHTO Bridge Design Specifications 4th Edition with California amendments.

A. Loads:

Vertical box:
Earth loads (Equivalant fluid pressure):
60 PCF above GWT
90 PCF below GWT

Landings: Live load 100 PSF

B. Reinforced concrete:
$f'c$ = 3,650 PSI
f_y = 60,000 PSI

C. Structural steel:
f_y = 50,000 PSI

D. Miscellaneous metal:
f_y = 36,000 PSI unless otherwise noted

B DETAIL NOTES

1. Metal work notes:

A. All metal work shall be hot dip galvanized after fabrication.

B. Secure metal to metal connections shown as + with a ½'' Ø x 1 ½'' hex head machine bolt, lock washer and hex nut unless otherwise noted.

C. Mechanical expansion anchors shall be ½'' Ø and have a 4'' minimum embedment, 3'-0'' maximum spacing and placed 6'' from ends, two minimum, unless otherwise shown.

D. All lock washers shall be helical spring lock washers.

E. All railing and ladders shall have smooth edges.

F. Welded steel grate: Unless otherwise noted

Bearing bars 1¼'' x ⅛'' @ 1 3/16'' C-C
Cross bars @ 4'' C-C
Trim bars 1¼'' x 3/16'' fillet welded to ends of bearing bars

Grate shall be anchored to supports with ¼'' Ø threaded stud and ''Saddle clip'' type fastener as reccomended by the manufacturer. Fasteners shall be installed at 3'-0'' C-C maximum 6'' from ends with 3 minimum per fixed grate.

Direction of bearing bars is indicated by

	BY	CHECKED
DESIGN	Tom Mesich	Dai Lu
DETAILS	Pete von Savoye	Dai Lu
QUANTITIES	Tom Mesich	Dai Lu

STATE OF CALIFORNIA
DEPARTMENT OF TRANSPORTATION

DIVISION OF ENGINEERING SERVICES
ARCHITECTURAL AND STRUCTURAL DESIGN

BRIDGE NO. 24-0273W
POST MILE 23.3

"O" STREET PUMPING PLANT
PUMP PLANT
DESIGN NOTES

SHEET ST1-0

TAEMWW Imperial Rev. 7/10

ORIGINAL SCALE IN INCHES FOR REDUCED PLANS 0 1 2 3

UNIT 3599
PROJECT NUMBER & PHASE 03120000581
EA 3F0400

DISREGARD PRINTS BEARING EARLIER REVISION DATES → 04-01-14

REVISION DATES (PRELIMINARY STAGE ONLY) SHEET OF

12-JUN-2014 10:32

P:\dist_03\0312000058_o_st_pump_house_rehab\expedite\st1_00.dgn

DIST.	COUNTY	ROUTE	POST MILES TOTAL PROJECT	SHEET NO.	TOTAL SHEETS
03	Sac	5	23.3	14	57

REGISTERED CIVIL ENGINEER DATE

REGISTERED PROFESSIONAL ENGINEER Tom R. Mesich No. 46748 Exp. 6-30-15 CIVIL STATE OF CALIFORNIA

6-9-14
PLANS APPROVAL DATE

The State of California or its officers or agents shall not be responsible for the accuracy or completeness of electronic copies of this plan sheet.

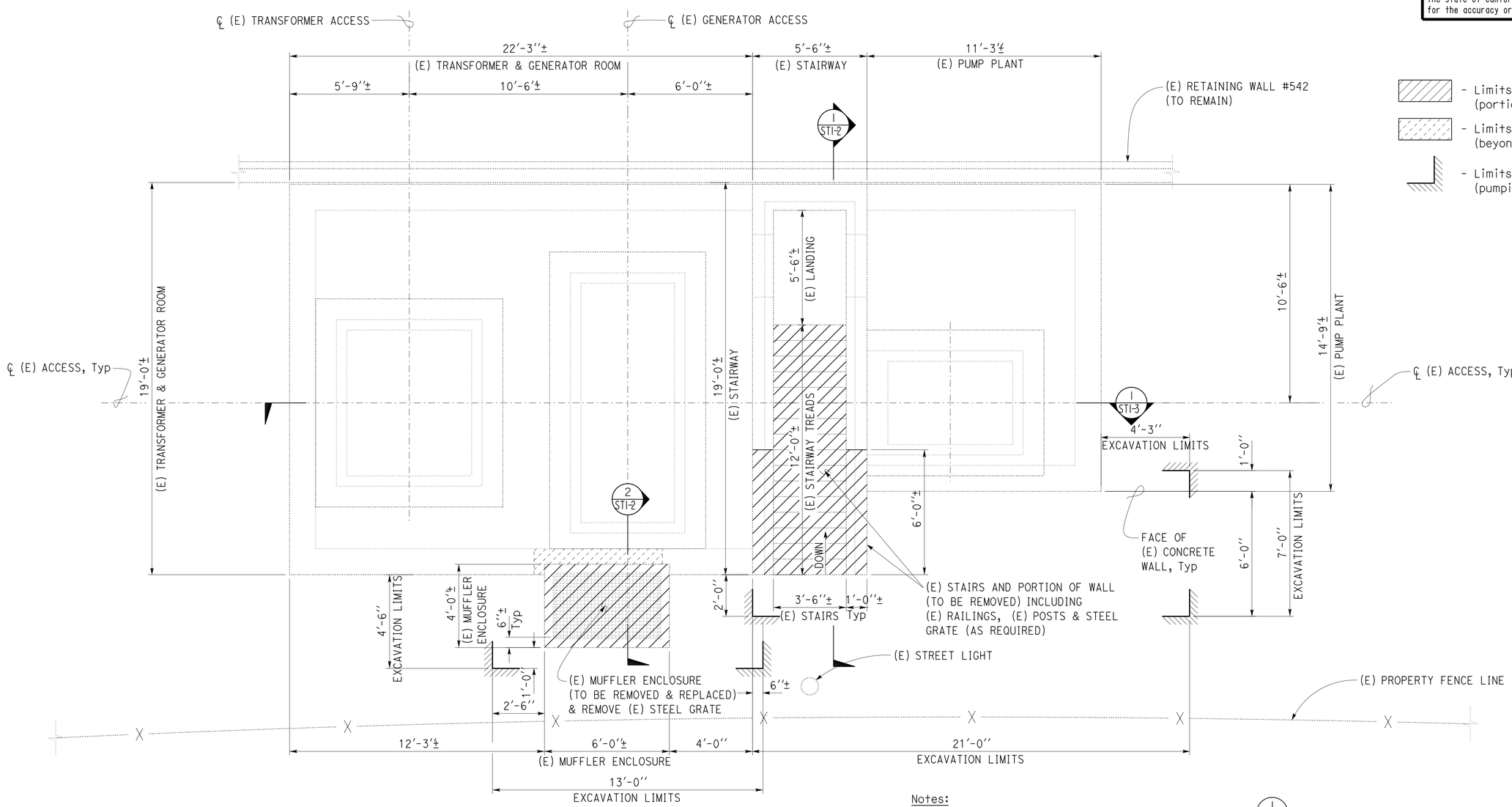

- Limits of (E) bridge removal (portion)
- Limits of (E) bridge removal (beyond)
- Limits of structural excavation (pumping plant)

Note:
The contractor shall verify all controlling field dimensions before ordering or fabricating any material.

1 EXISTING PUMPING PLANT REMOVAL PLAN

SCALE 3/8''= 1' - 0''

Notes:
1.) For new access stairs dimensions & details, see 1 STI-4
2.) For new muffler enclosure dimensions & details, see 1 STI-10

	BY	CHECKED
DESIGN	Tom Mesich	Dai Lu
DETAILS	Pete von Savoye	Dai Lu
QUANTITIES	Tom Mesich	Dai Lu

STATE OF CALIFORNIA
DEPARTMENT OF TRANSPORTATION

DIVISION OF ENGINEERING SERVICES
ARCHITECTURAL AND STRUCTURAL DESIGN

BRIDGE NO. 24-0273W
POST MILE 23.3

"O" STREET PUMPING PLANT
PUMP PLANT — REMOVAL & EXCAVATION PLAN

SHEET ST1-1

TAEMWW Imperial Rev. 7/10

ORIGINAL SCALE IN INCHES FOR REDUCED PLANS 0 1 2 3

UNIT 3599
PROJECT NUMBER & PHASE 03120000581
EA 3F0400

DISREGARD PRINTS BEARING EARLIER REVISION DATES → 02-24-14

REVISION DATES (PRELIMINARY STAGE ONLY) SHEET OF

P:\dist_03\0312000058_o_st_pump_house_rehab\expedite\st1_01.dgn

12-JUN-2014 10:32

DIST.	COUNTY	ROUTE	POST MILES TOTAL PROJECT	SHEET NO.	TOTAL SHEETS
03	Sac	5	23.3	15	57

REGISTERED CIVIL ENGINEER DATE

REGISTERED PROFESSIONAL ENGINEER Tom R. Mesich No. 46748 Exp. 6-30-15 CIVIL STATE OF CALIFORNIA

6-9-14
PLANS APPROVAL DATE

The State of California or its officers or agents shall not be responsible for the accuracy or completeness of electronic copies of this plan sheet.

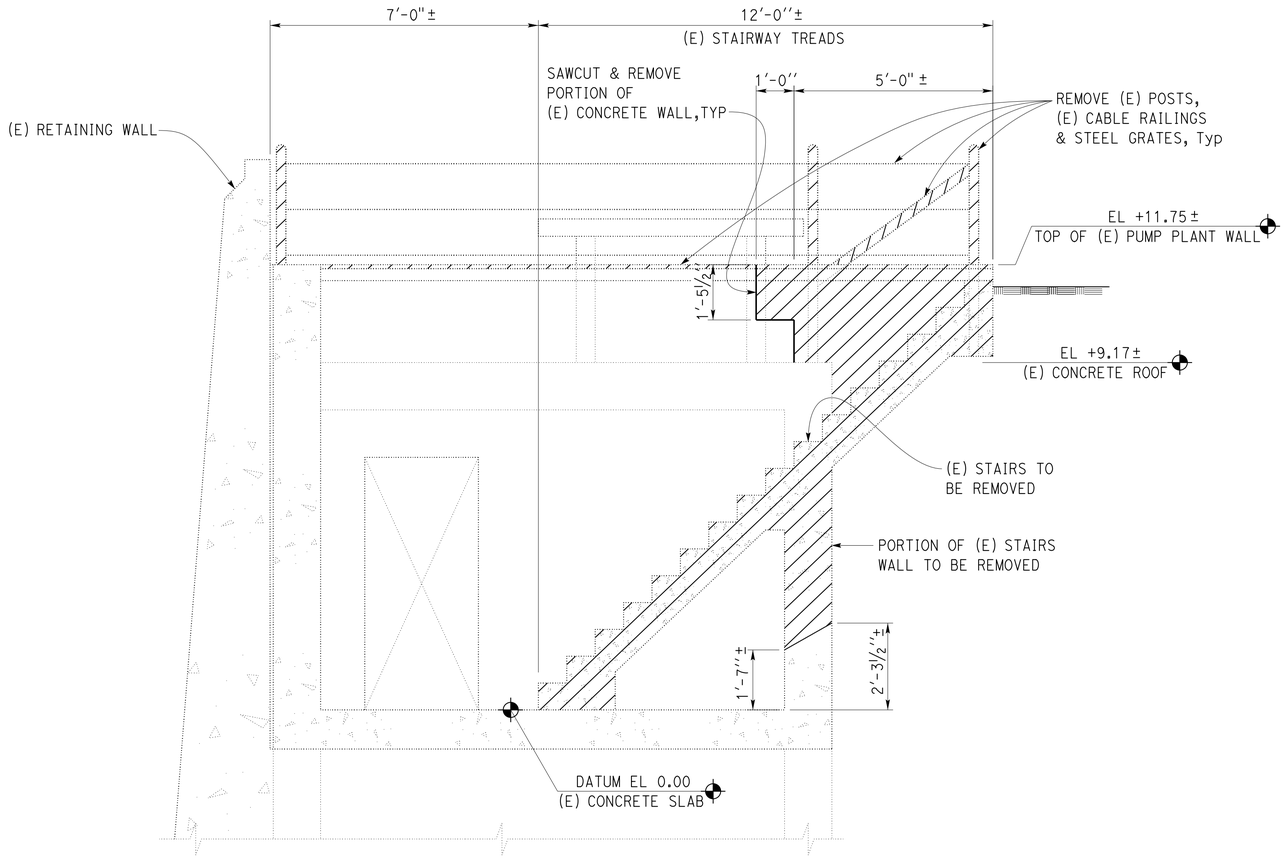

1 EXISTING PUMPING PLANT ACCESS STAIRS REMOVAL
SCALE 1/2'' = 1' - 0''

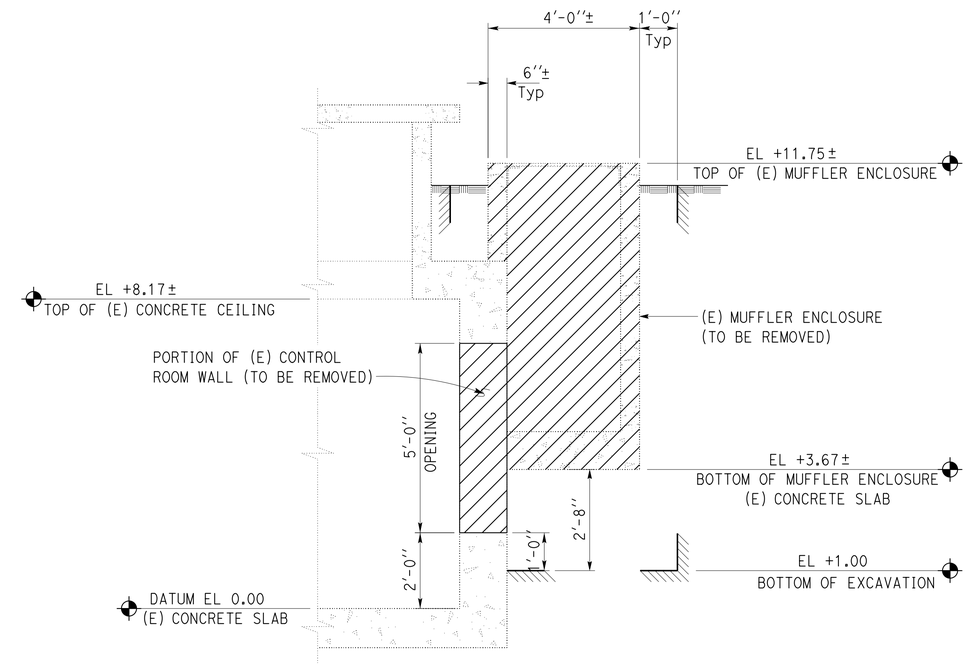

2 MUFFLER ENCLOSURE EXCAVATION SECTION
SCALE 1/2'' = 1' - 0''

- Limits of (E) bridge removal (portion)

- Limits of structural excavation (pumping plant)

Note:
The contractor shall verify all controlling field dimensions before ordering or fabricating any material.

	BY	CHECKED
DESIGN	Tom Mesich	Dai Lu
DETAILS	Pete von Savoye	Dai Lu
QUANTITIES	Tom Mesich	Dai Lu

STATE OF CALIFORNIA
DEPARTMENT OF TRANSPORTATION

DIVISION OF ENGINEERING SERVICES
ARCHITECTURAL AND STRUCTURAL DESIGN

BRIDGE NO. 24-0273W
POST MILE 23.3

"O" STREET PUMPING PLANT
PUMP PLANT
EXISTING REMOVAL SECTIONS

SHEET ST1-2

TAEMWW Imperial Rev. 7/10

ORIGINAL SCALE IN INCHES FOR REDUCED PLANS 0 1 2 3

UNIT 3599
PROJECT NUMBER & PHASE 03120000581
EA 3F0400

DISREGARD PRINTS BEARING EARLIER REVISION DATES → 02-24-14

REVISION DATES (PRELIMINARY STAGE ONLY) SHEET OF

12-JUN-2014 10:32
P:\dist_03\0312000058_o_st_pump_house_rehab\expedite\st1_02.dgn

DIST.	COUNTY	ROUTE	POST MILES TOTAL PROJECT	SHEET NO.	TOTAL SHEETS
03	Sac	5	23.3	16	57

REGISTERED CIVIL ENGINEER DATE

REGISTERED PROFESSIONAL ENGINEER Tom R. Mesich No. 46748 Exp. 6-30-15 CIVIL STATE OF CALIFORNIA

6-9-14
PLANS APPROVAL DATE

The State of California or its officers or agents shall not be responsible for the accuracy or completeness of electronic copies of this plan sheet.

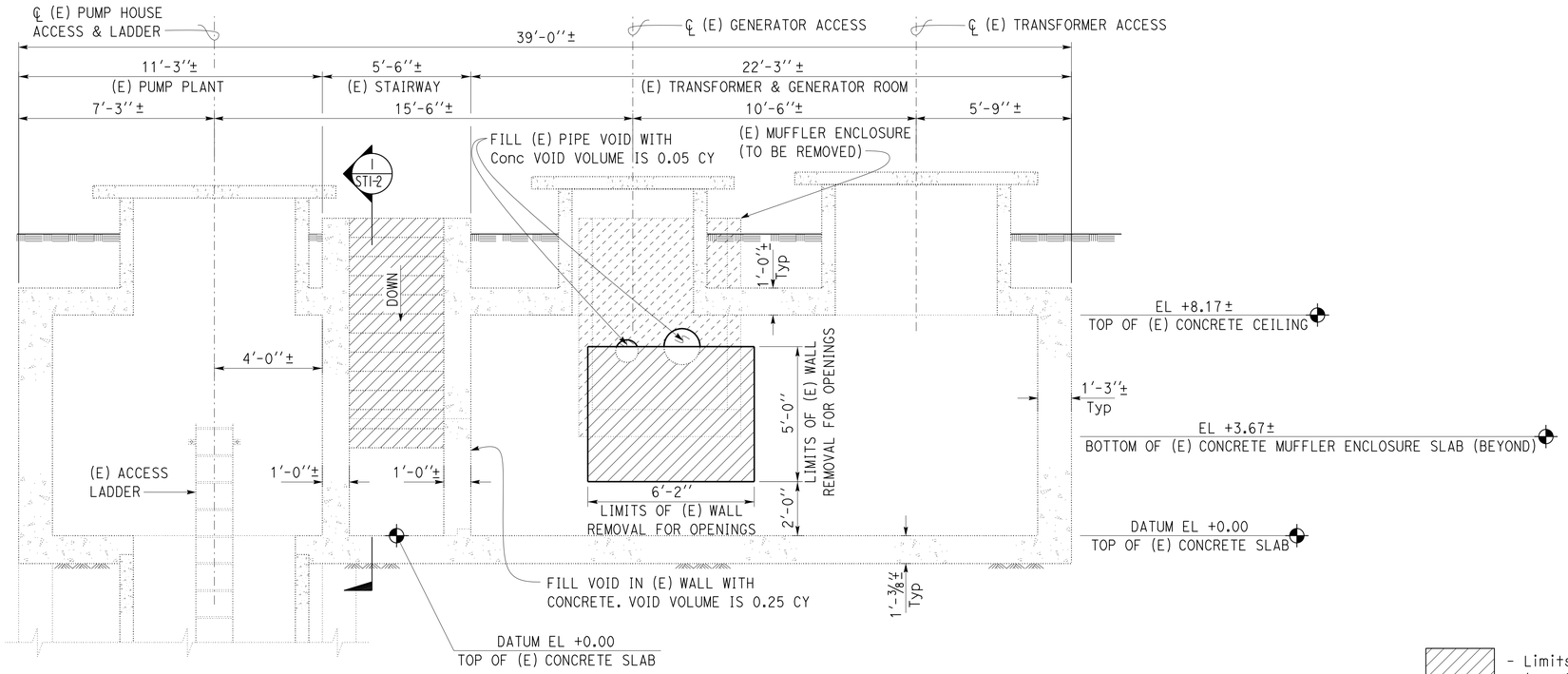

Note:
For details & dimensions not shown, see 1/STI-1 & 1/STI-2

1 EXISTING PUMPING PLANT REMOVAL SECTION
Scale 3/8''= 1' - 0''

- Limits of (E) bridge removal (portion)
- Limits of (E) bridge removal (beyond)

Note:
The contractor shall verify all controlling field dimensions before ordering or fabricating any material.

	BY	CHECKED
DESIGN	Tom Mesich	Dai Lu
DETAILS	Pete von Savoye	Dai Lu
QUANTITIES	Tom Mesich	Dai Lu

STATE OF CALIFORNIA
DEPARTMENT OF TRANSPORTATION

DIVISION OF ENGINEERING SERVICES
ARCHITECTURAL AND STRUCTURAL DESIGN

BRIDGE NO. 24-0273W
POST MILE 23.3

"O" STREET PUMPING PLANT
PUMP PLANT
REMOVAL SECTION

SHEET ST1-3

TAEMWW Imperial Rev. 7/10

ORIGINAL SCALE IN INCHES FOR REDUCED PLANS 0 1 2 3

UNIT 3599
PROJECT NUMBER & PHASE 03120000581
EA 3F0400

DISREGARD PRINTS BEARING EARLIER REVISION DATES → 02-20-14

REVISION DATES (PRELIMINARY STAGE ONLY) SHEET OF

P:\dist_03\0312000058_o_st_pump_house_rehab\expedite\st1_03.dgn

12-JUN-2014 10:33

DIST.	COUNTY	ROUTE	POST MILES TOTAL PROJECT	SHEET NO.	TOTAL SHEETS
03	Sac	5	23.3	17	57

REGISTERED CIVIL ENGINEER DATE

REGISTERED PROFESSIONAL ENGINEER Tom R. Mesich No. 46748 Exp. 6-30-15 CIVIL STATE OF CALIFORNIA

6-9-14
PLANS APPROVAL DATE

The State of California or its officers or agents shall not be responsible for the accuracy or completeness of electronic copies of this plan sheet.

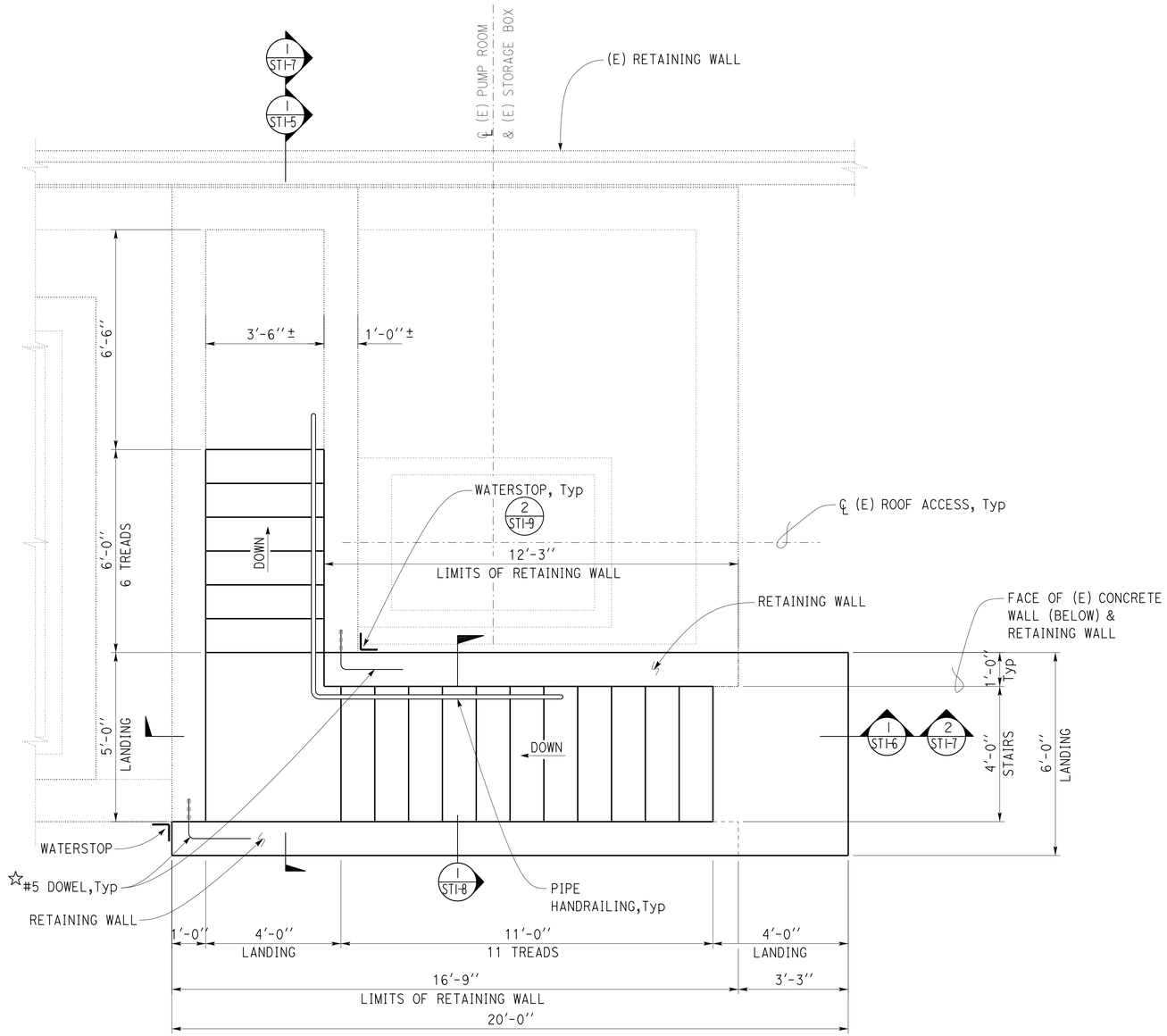

Notes:
1.) Pipe handrailing on retaining wall not shown for clarity.

2.) Concrete roof slab and stairwell access cover not shown for clarity, see 1 STI-9

1 PUMPING PLANT ACCESS STAIRS PLAN
SCALE 1/2'' = 1' - 0''

☆Note:
Drill & bond #5 dowels @ 12'' oc into (E) wall with 8'' min embed, typ.

Note:
The contractor shall verify all controlling field dimensions before ordering or fabricating any material.

	BY	CHECKED
DESIGN	Tom Mesich	Dai Lu
DETAILS	Pete von Savoye	Dai Lu
QUANTITIES	Tom Mesich	Dai Lu

STATE OF CALIFORNIA DEPARTMENT OF TRANSPORTATION

DIVISION OF ENGINEERING SERVICES ARCHITECTURAL AND STRUCTURAL DESIGN

BRIDGE NO. 24-0273W
POST MILE 23.3

"O" STREET PUMPING PLANT
PUMP PLANT — NEW ACCESS STAIRS PLAN

SHEET ST1-4

TAEMWW Imperial Rev. 7/10

ORIGINAL SCALE IN INCHES FOR REDUCED PLANS 0 1 2 3

UNIT 3599
PROJECT NUMBER & PHASE 03120000581
EA 3F0400

DISREGARD PRINTS BEARING EARLIER REVISION DATES → 02-24-14

REVISION DATES (PRELIMINARY STAGE ONLY) SHEET OF

12-JUN-2014 10:33

P:\dist_03\0312000058_o_st_pump_house_rehab\expedite\st1_04.dgn

DIST.	COUNTY	ROUTE	POST MILES TOTAL PROJECT	SHEET NO.	TOTAL SHEETS
03	Sac	5	23.3	18	57

REGISTERED CIVIL ENGINEER DATE

REGISTERED PROFESSIONAL ENGINEER Tom R. Mesich No. 46748 Exp. 6-30-15 CIVIL STATE OF CALIFORNIA

6-9-14
PLANS APPROVAL DATE

The State of California or its officers or agents shall not be responsible for the accuracy or completeness of electronic copies of this plan sheet.

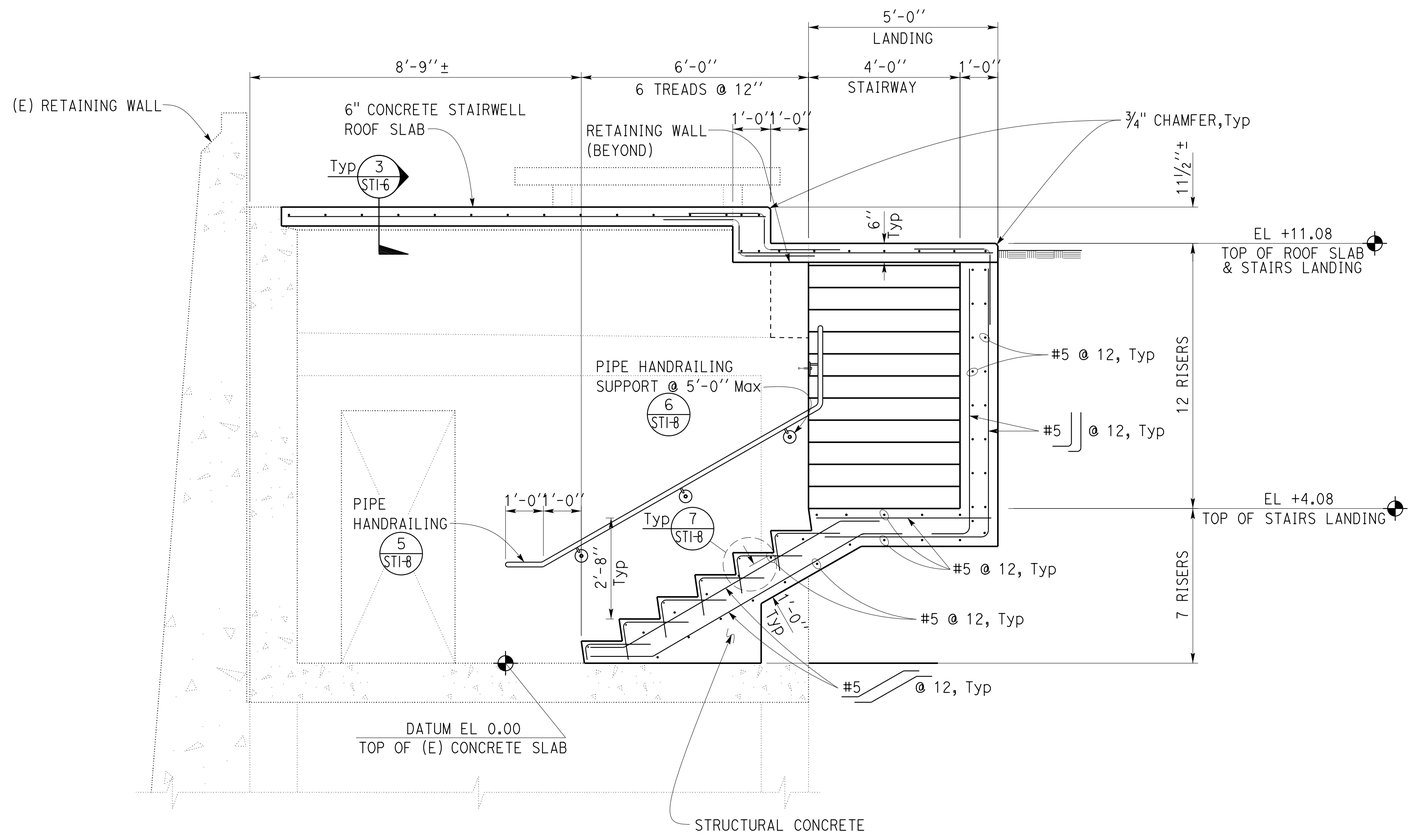

Note:
Concrete stairwell roof slab not shown for clarity, see 1/STI-7 & 1/STI-9

1 PUMPING PLANT ACCESS STAIRS SECTION
SCALE 1/2''= 1' - 0''

Note:
The contractor shall verify all controlling field dimensions before ordering or fabricating any material.

	BY	CHECKED
DESIGN	Tom Mesich	Dai Lu
DETAILS	Pete von Savoye	Dai Lu
QUANTITIES	Tom Mesich	Dai Lu

STATE OF CALIFORNIA
DEPARTMENT OF TRANSPORTATION

DIVISION OF ENGINEERING SERVICES
ARCHITECTURAL AND STRUCTURAL DESIGN

BRIDGE NO. 24-0273W
POST MILE 23.3

"O" STREET PUMPING PLANT
PUMP PLANT | ACCESS STAIRS & LANDING SECTION

SHEET ST1-5

TAEMWW Imperial Rev. 7/10

ORIGINAL SCALE IN INCHES FOR REDUCED PLANS 0 1 2 3

UNIT 3599
PROJECT NUMBER & PHASE 03120000581
EA 3F0400

DISREGARD PRINTS BEARING EARLIER REVISION DATES → 02-19-14

REVISION DATES (PRELIMINARY STAGE ONLY) SHEET OF

P:\dist_03\0312000058_o_st_pump_house_rehab\expedite\st1_05.dgn 12-JUN-2014 10:33

DIST.	COUNTY	ROUTE	POST MILES TOTAL PROJECT	SHEET NO.	TOTAL SHEETS
03	Sac	5	23.3	19	57

REGISTERED CIVIL ENGINEER DATE

REGISTERED PROFESSIONAL ENGINEER Tom R. Mesich No. 46748 Exp. 6-30-15 CIVIL STATE OF CALIFORNIA

6-9-14
PLANS APPROVAL DATE

The State of California or its officers or agents shall not be responsible for the accuracy or completeness of electronic copies of this plan sheet.

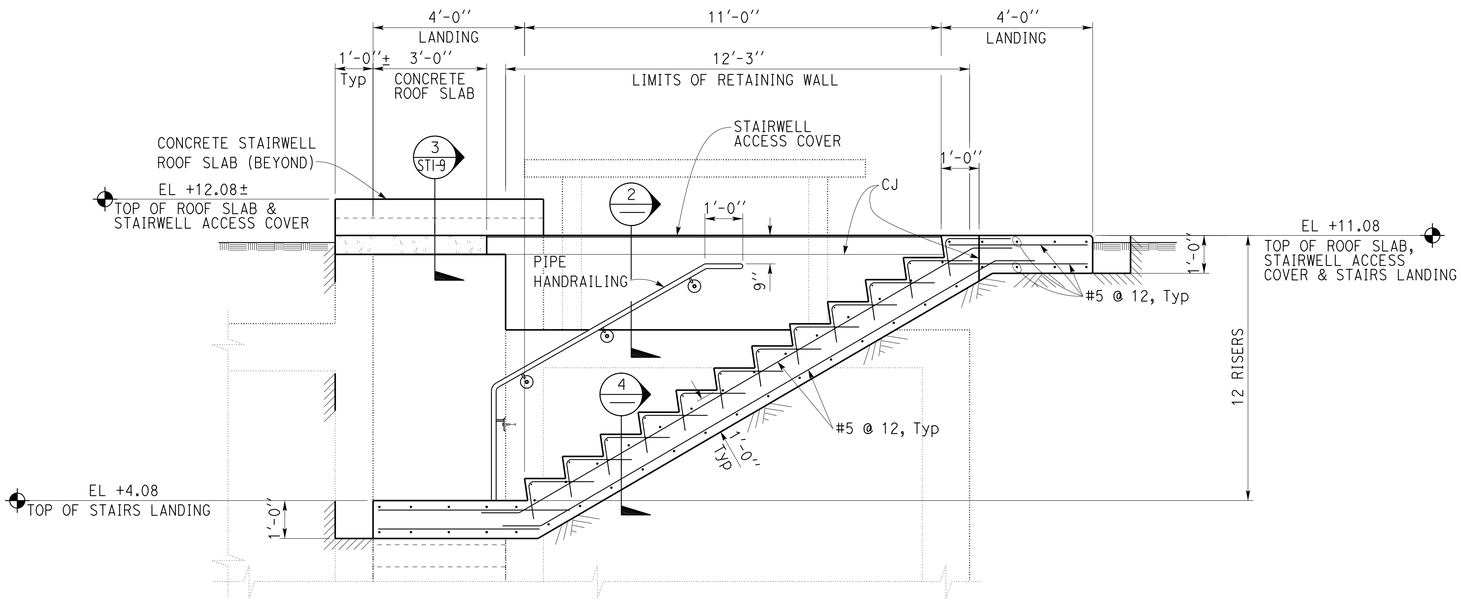

Notes:
1.) For stairs reinforcement and details not shown, see (1 / STI-5) Sim
2.) For stairs structure backfill limits, see (2 / STI-7)

1 PUMPING PLANT ACCESS STAIRS SECTION
SCALE 1/2''= 1' - 0''

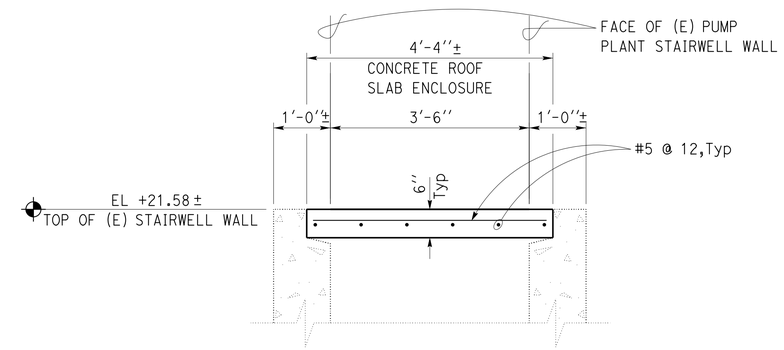

3 CONCRETE ROOF SLAB ENCLOSURE DETAIL
SCALE 3/4''= 1' - 0''

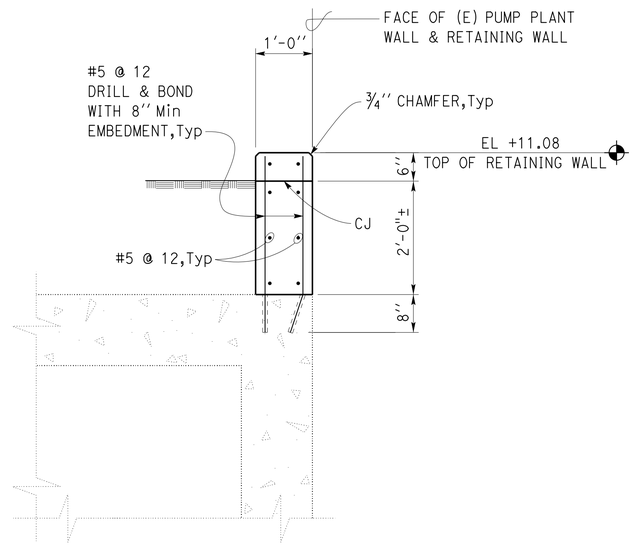

Note:
Provide block outs at all post pocket locations.

2 RETAINING WALL DETAIL
SCALE 3/4''= 1' - 0''

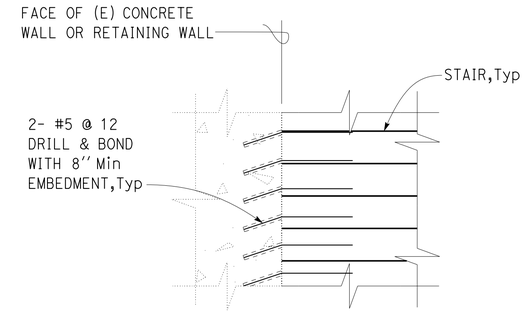

Note:
Not all stairs reinforcement is shown.

4 STAIRS REINFORCEMENT AT WALL DETAIL
SCALE 3/4''= 1' - 0''

Note:
The contractor shall verify all controlling field dimensions before ordering or fabricating any material.

	BY	CHECKED
DESIGN	Tom Mesich	Dai Lu
DETAILS	Pete von Savoye	Dai Lu
QUANTITIES	Tom Mesich	Dai Lu

STATE OF CALIFORNIA DEPARTMENT OF TRANSPORTATION

DIVISION OF ENGINEERING SERVICES ARCHITECTURAL AND STRUCTURAL DESIGN

BRIDGE NO. 24-0273W
POST MILE 23.3

"O" STREET PUMPING PLANT
PUMP PLANT | ACCESS STAIRS & LANDING SECTION

SHEET ST1-6

TAEMWW Imperial Rev. 7/10

ORIGINAL SCALE IN INCHES FOR REDUCED PLANS 0 1 2 3

UNIT 3599
PROJECT NUMBER & PHASE 03120000581
EA 3F0400

DISREGARD PRINTS BEARING EARLIER REVISION DATES → 02-25-14

REVISION DATES (PRELIMINARY STAGE ONLY) SHEET OF

12-JUN-2014 10:33
P:\dist_03\0312000058_o_st_pump_house_rehab\expedite\st1_06.dgn

DIST.	COUNTY	ROUTE	POST MILES TOTAL PROJECT	SHEET NO.	TOTAL SHEETS
03	Sac	5	23.3	20	57

REGISTERED CIVIL ENGINEER DATE

REGISTERED PROFESSIONAL ENGINEER Tom R. Mesich No. 46748 Exp. 6-30-15 CIVIL STATE OF CALIFORNIA

6-9-14
PLANS APPROVAL DATE

The State of California or its officers or agents shall not be responsible for the accuracy or completeness of electronic copies of this plan sheet.

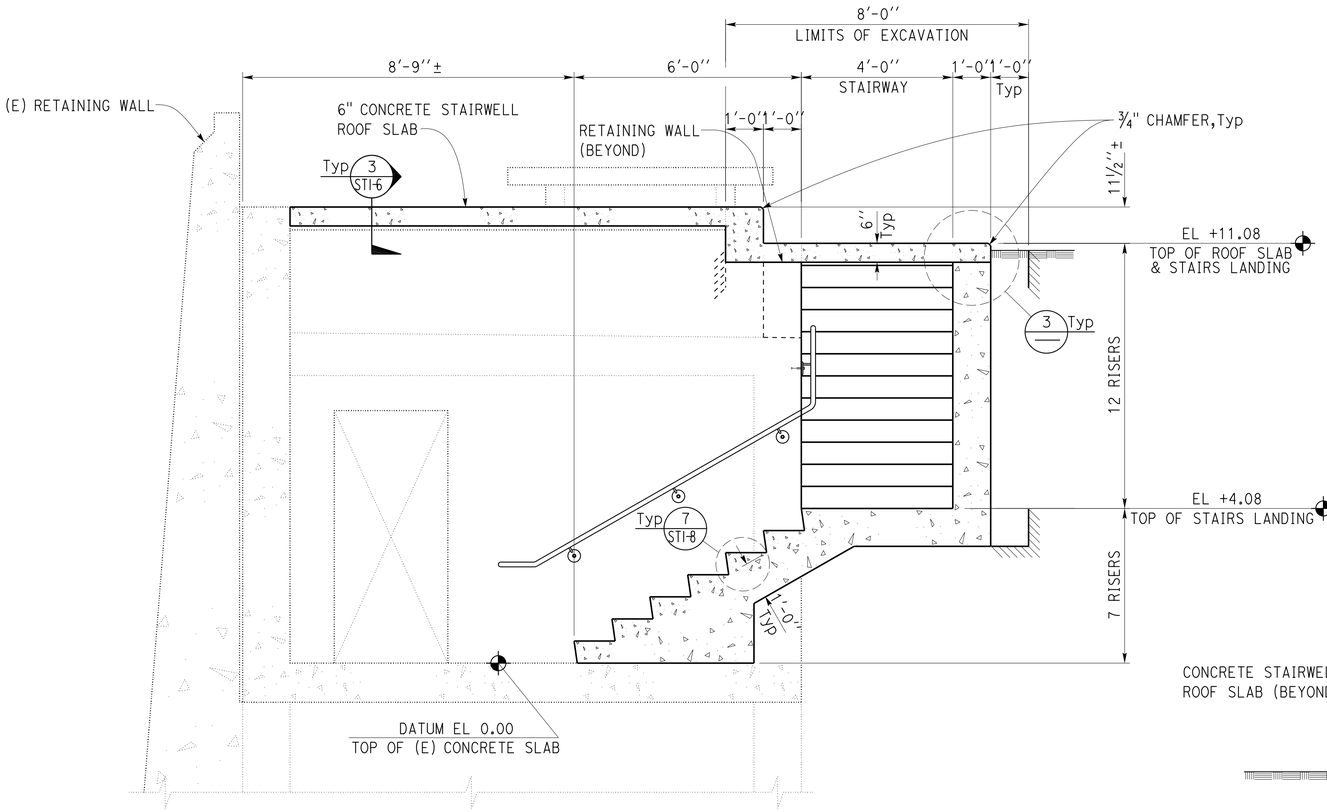

Note:
Pipe handrailing not shown for clarity, see 1/STI-9

1 PUMPING PLANT ACCESS STAIRS SECTION
SCALE 1/2'' = 1' - 0''

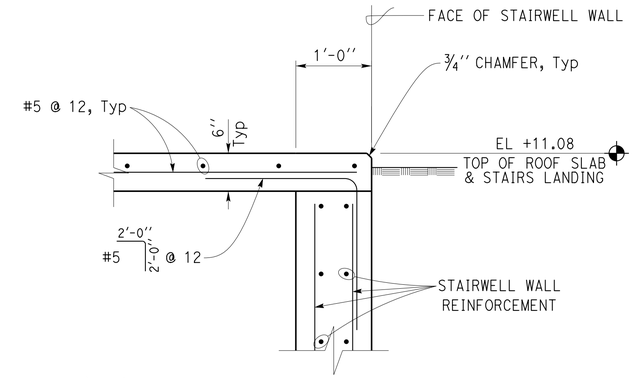

Note:
Concrete stairs (beyond) not shown for clarity, see 1

3 ROOF SLAB AT WALL DETAIL
SCALE 1'' = 1' - 0''

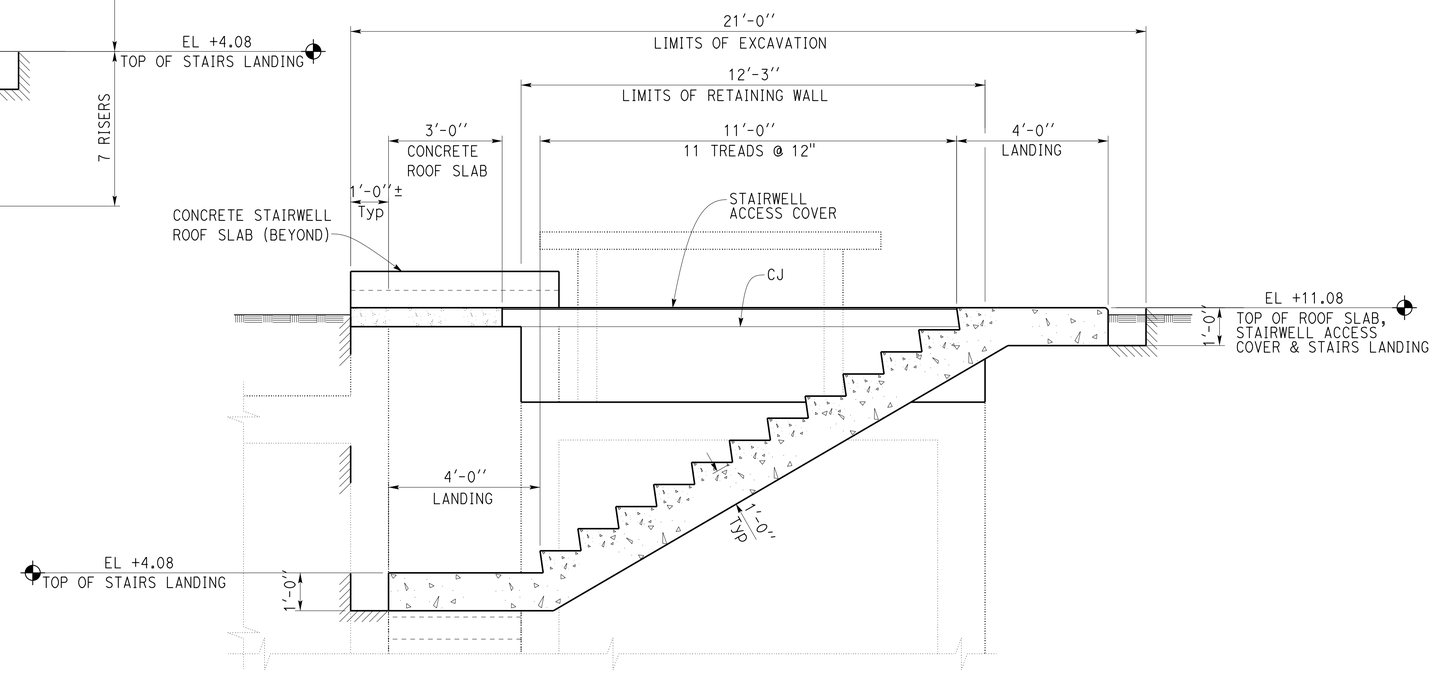

Note:
Pipe handrailing not shown for clarity, see 1/STI-9

2 PUMPING PLANT ACCESS STAIRS SECTION
SCALE 1/2'' = 1' - 0''

- Limits of structure backfill (pumping plant)

Note:
The contractor shall verify all controlling field dimensions before ordering or fabricating any material.

	BY	CHECKED
DESIGN	Tom Mesich	Dai Lu
DETAILS	Pete von Savoye	Dai Lu
QUANTITIES	Tom Mesich	Dai Lu

STATE OF CALIFORNIA
DEPARTMENT OF TRANSPORTATION

DIVISION OF ENGINEERING SERVICES
ARCHITECTURAL AND STRUCTURAL DESIGN

BRIDGE NO. 24-0273W
POST MILE 23.3

"O" STREET PUMPING PLANT
PUMP PLANT
STAIRS EXCAVATION SECTIONS

SHEET ST1-7

TAEMWW Imperial Rev. 7/10

ORIGINAL SCALE IN INCHES FOR REDUCED PLANS 0 1 2 3

UNIT 3599
PROJECT NUMBER & PHASE 03120000581
EA 3F0400

DISREGARD PRINTS BEARING EARLIER REVISION DATES → 02-25-14

REVISION DATES (PRELIMINARY STAGE ONLY) SHEET OF

P:\dist_03\0312000058_o_st_pump_house_rehab\expedite\st1_07.dgn

12-JUN-2014 10:33

DIST.	COUNTY	ROUTE	POST MILES TOTAL PROJECT	SHEET NO.	TOTAL SHEETS
03	Sac	5	23.3	21	57

REGISTERED CIVIL ENGINEER DATE

REGISTERED PROFESSIONAL ENGINEER Tom R. Mesich No. 46748 Exp. 6-30-15 CIVIL STATE OF CALIFORNIA

6-9-14
PLANS APPROVAL DATE

The State of California or its officers or agents shall not be responsible for the accuracy or completeness of electronic copies of this plan sheet.

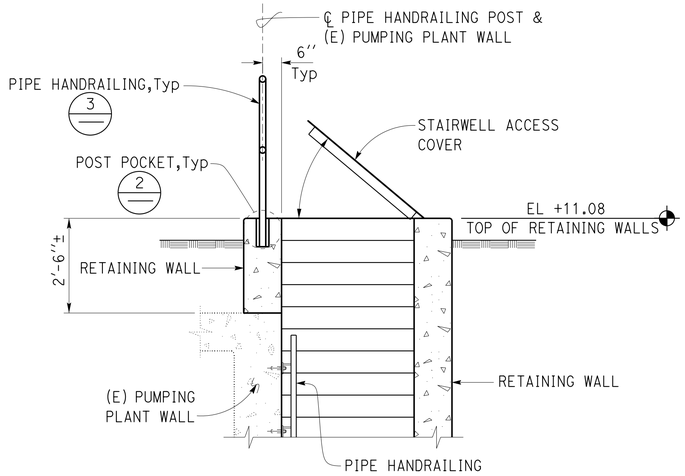

Note:
1. Bend reinforcement steel as required to clear stairwell access cover frame.
2. Stairwell access cover to fit flush with top of walls and slab.

1 STAIRWELL ACCESS COVER & PIPE HANDRAILING SECTION
SCALE 1/2''= 1' - 0''

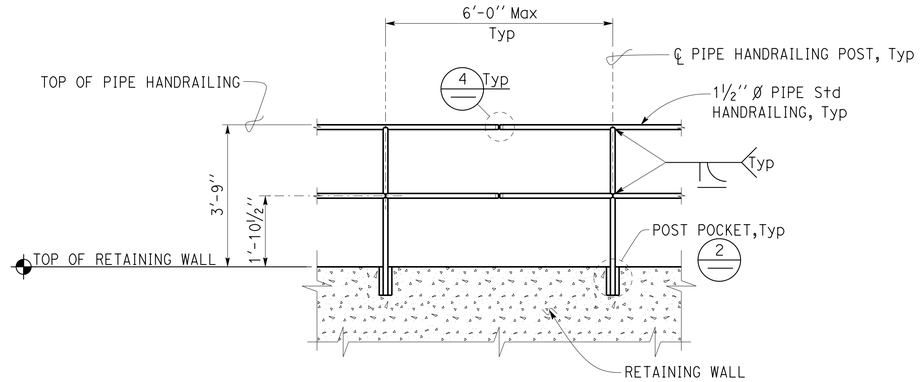

3 PIPE HANDRAILING DETAIL
SCALE 1/2'' = 1' - 0''

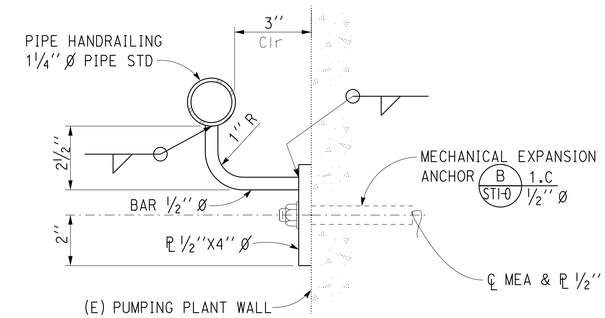

6 PIPE HANDRAILING SUPPORT DETAIL
SCALE 4'' = 1' - 0''

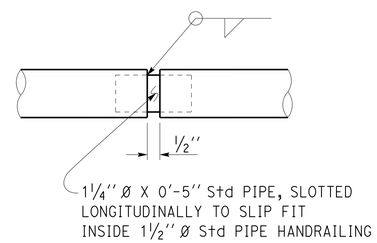

4 EXPANSION JOINT DETAIL
SCALE 4'' = 1' - 0''

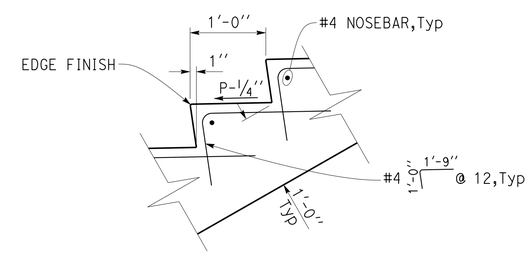

7 TYPICAL STAIR DETAIL
NO SCALE

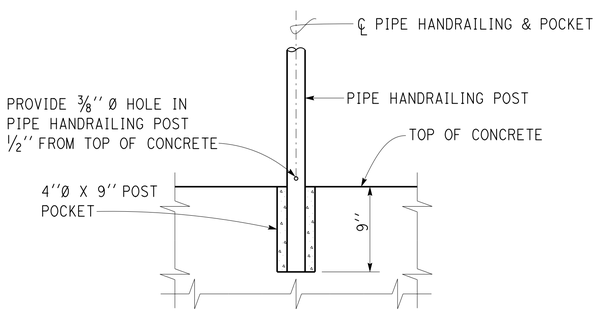

Note:
Pack post pocket with epoxy grout, typ.

2 POST POCKET DETAIL
SCALE 1 1/2''= 1'-0''

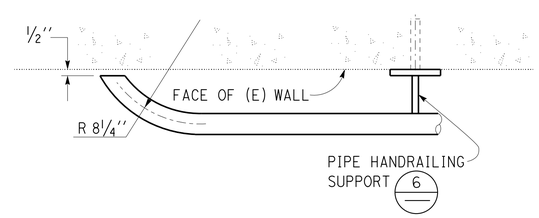

5 PIPE HANDRAILING RETURN AT WALL
SCALE 2'' = 1'-0''

Note:
The contractor shall verify all controlling field dimensions before ordering or fabricating any material.

	BY	CHECKED
DESIGN	Tom Mesich	Dai Lu
DETAILS	Pete von Savoye	Dai Lu
QUANTITIES	Tom Mesich	Dai Lu

STATE OF CALIFORNIA
DEPARTMENT OF TRANSPORTATION

DIVISION OF ENGINEERING SERVICES
ARCHITECTURAL AND STRUCTURAL DESIGN

BRIDGE NO. 24-0273W
POST MILE 23.3

"O" STREET PUMPING PLANT
PUMP PLANT
MISCELLANEOUS DETAILS NO. 1

SHEET ST1-8

TAEMWW Imperial Rev. 7/10

ORIGINAL SCALE IN INCHES FOR REDUCED PLANS 0 1 2 3

UNIT 3599
PROJECT NUMBER & PHASE 03120000581
EA 3F0400

DISREGARD PRINTS BEARING EARLIER REVISION DATES 02-18-14

REVISION DATES (PRELIMINARY STAGE ONLY) SHEET OF

P:\dist_03\0312000058_o_st_pump_house_rehab\expedite\st1_08.dgn

12-JUN-2014 10:33

DIST.	COUNTY	ROUTE	POST MILES TOTAL PROJECT	SHEET NO.	TOTAL SHEETS
03	Sac	5	23.3	22	57

REGISTERED CIVIL ENGINEER DATE

REGISTERED PROFESSIONAL ENGINEER Tom R. Mesich No. 46748 Exp. 6-30-15 CIVIL STATE OF CALIFORNIA

6-9-14
PLANS APPROVAL DATE

The State of California or its officers or agents shall not be responsible for the accuracy or completeness of electronic copies of this plan sheet.

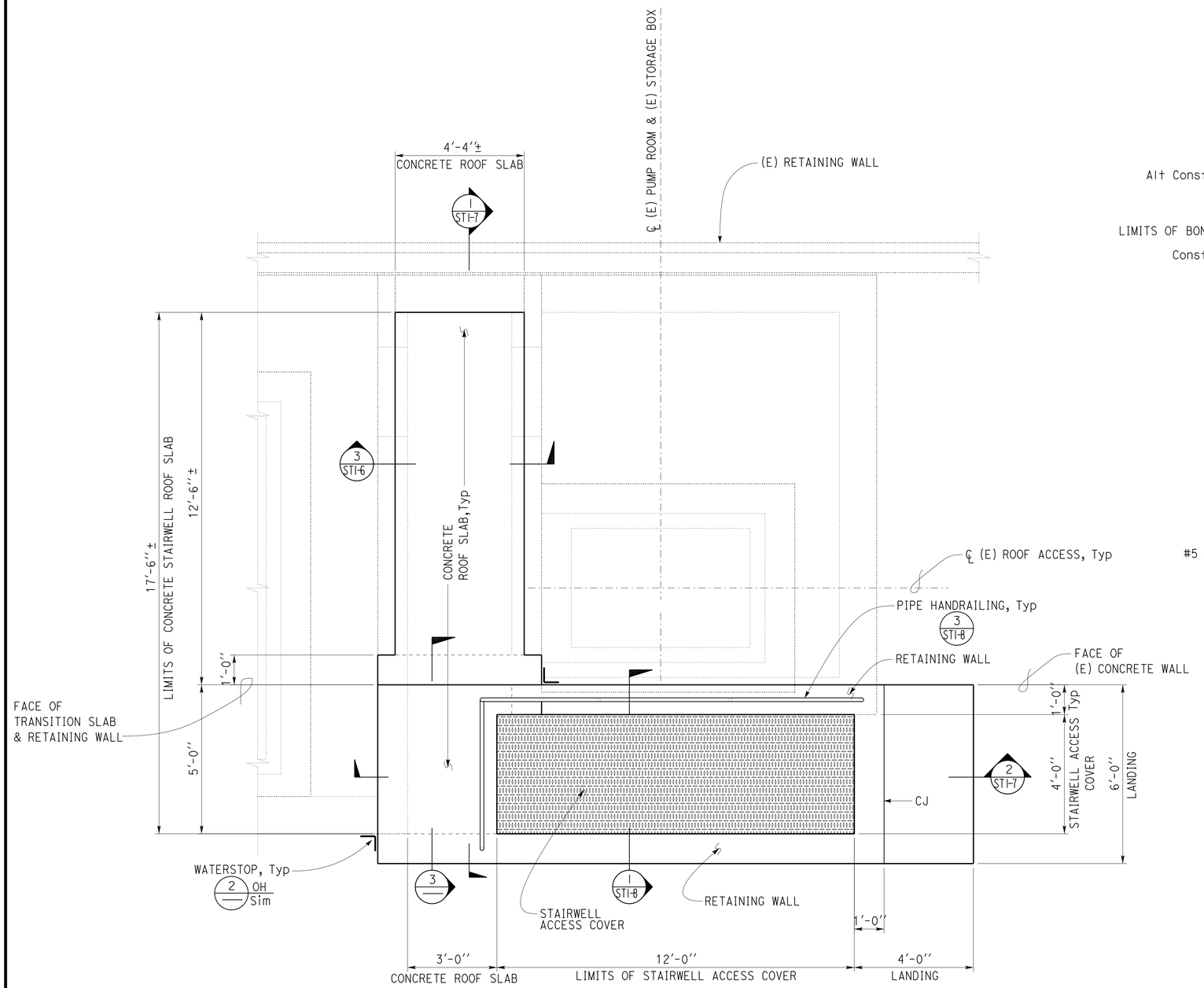

1 STAIRWELL CONCRETE ROOF AND ACCESS COVER PLAN
SCALE 1/2'' = 1' - 0''

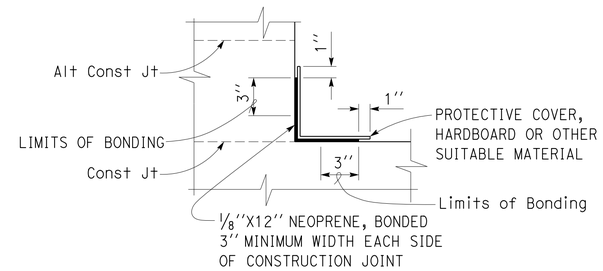

2 WATERSTOP DETAIL
NO SCALE

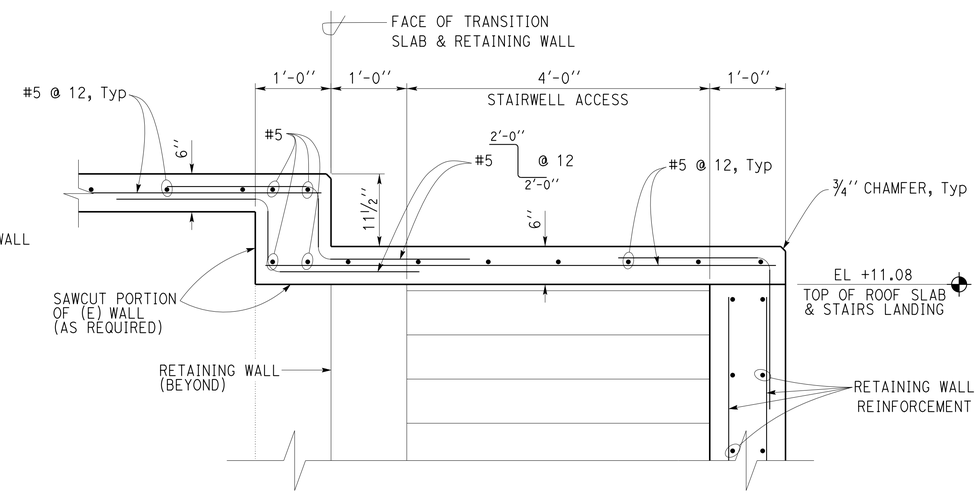

3 TRANSITION ROOF SLAB DETAIL
SCALE 1'' = 1' - 0''

Note:
The contractor shall verify all controlling field dimensions before ordering or fabricating any material.

	BY	CHECKED
DESIGN	Tom Mesich	Dai Lu
DETAILS	Pete von Savoye	Dai Lu
QUANTITIES	Tom Mesich	Dai Lu

STATE OF CALIFORNIA
DEPARTMENT OF TRANSPORTATION

DIVISION OF ENGINEERING SERVICES
ARCHITECTURAL AND STRUCTURAL DESIGN

BRIDGE NO. 24-0273W
POST MILE 23.3

"O" STREET PUMPING PLANT
PUMP PLANT | MISCELLANEOUS DETAILS NO. 2

SHEET ST1-9

TAEMWW Imperial Rev. 7/10

ORIGINAL SCALE IN INCHES FOR REDUCED PLANS 0 1 2 3

UNIT 3599
PROJECT NUMBER & PHASE 03120000581
EA 3F0400

DISREGARD PRINTS BEARING EARLIER REVISION DATES
REVISION DATES (PRELIMINARY STAGE ONLY) 04-01-14
SHEET OF

P:\dist_03\0312000058_o_st_pump_house_rehab\expedite\st1_09.dgn 12-JUN-2014 10:33

DIST.	COUNTY	ROUTE	POST MILES TOTAL PROJECT	SHEET NO.	TOTAL SHEETS
03	Sac	5	23.3	23	57

REGISTERED CIVIL ENGINEER DATE

REGISTERED PROFESSIONAL ENGINEER Tom R. Mesich No. 46748 Exp. 6-30-15 CIVIL STATE OF CALIFORNIA

6-9-14
PLANS APPROVAL DATE

The State of California or its officers or agents shall not be responsible for the accuracy or completeness of electronic copies of this plan sheet.

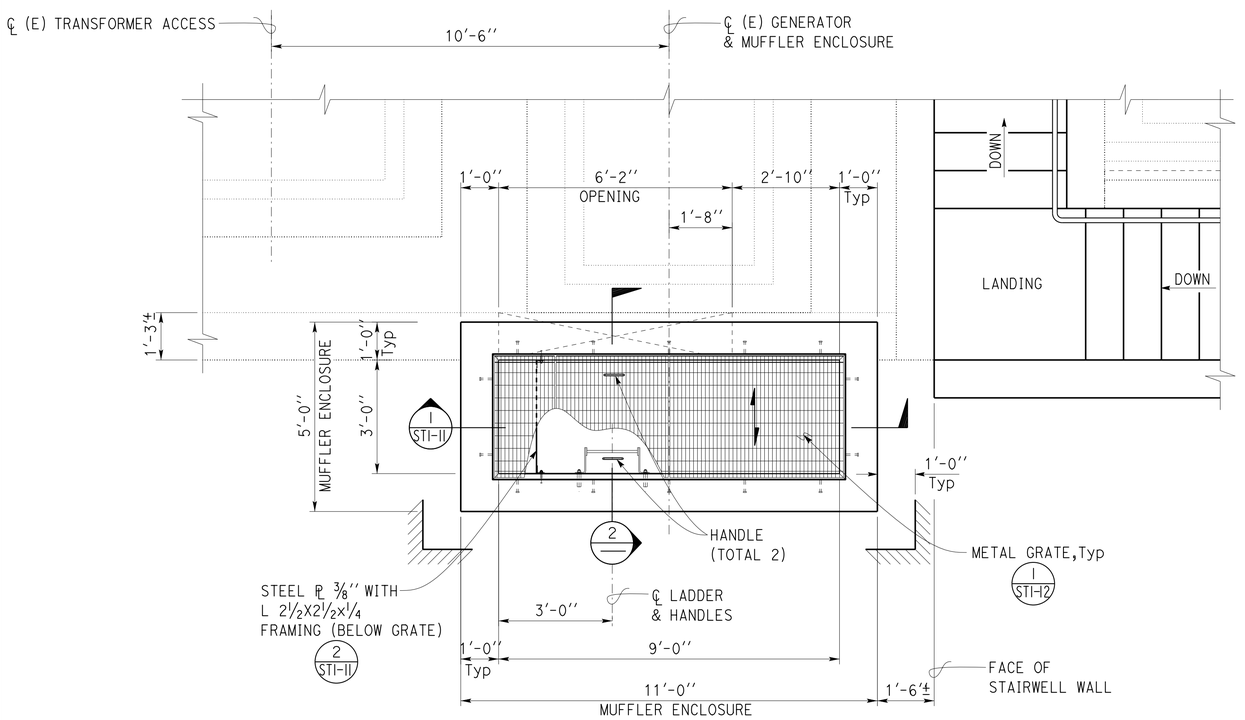

Note:
For ladder details, see STI-14

1 MUFFLER ENCLOSURE PLAN
SCALE 1/2''= 1' - 0''

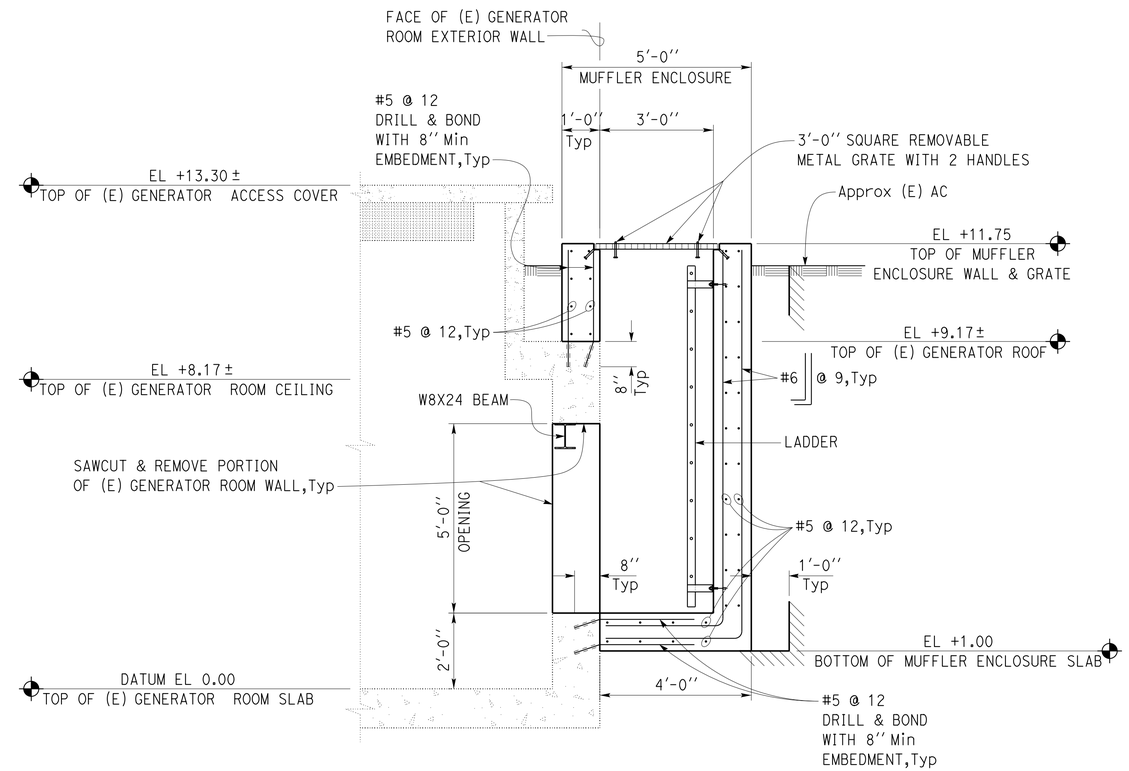

2 MUFFLER ENCLOSURE SECTION
SCALE 1/2''= 1' - 0''

Note:
The contractor shall verify all controlling field dimensions before ordering or fabricating any material.

- Indicates limits of structural backfill (pumping plant)

	BY	CHECKED
DESIGN	Tom Mesich	Dai Lu
DETAILS	Pete von Savoye	Dai Lu
QUANTITIES	Tom Mesich	Dai Lu

STATE OF CALIFORNIA
DEPARTMENT OF TRANSPORTATION

DIVISION OF ENGINEERING SERVICES
ARCHITECTURAL AND STRUCTURAL DESIGN

BRIDGE NO. 24-0273W
POST MILE 23.3

"O" STREET PUMPING PLANT
PUMP PLANT — MUFFLER ENCLOSURE PLAN & SECTION

SHEET ST1-10

TAEMWW Imperial Rev. 7/10

ORIGINAL SCALE IN INCHES FOR REDUCED PLANS 0 1 2 3

UNIT 3599
PROJECT NUMBER & PHASE 03120000581
EA 3F0400

DISREGARD PRINTS BEARING EARLIER REVISION DATES → 02-20-14

REVISION DATES (PRELIMINARY STAGE ONLY) SHEET OF

P:\dist_03\0312000058_o_st_pump_house_rehab\expedite\st1_10.dgn

12-JUN-2014 10:33

DIST.	COUNTY	ROUTE	POST MILES TOTAL PROJECT	SHEET NO.	TOTAL SHEETS
03	Sac	5	23.3	24	57

REGISTERED CIVIL ENGINEER DATE

REGISTERED PROFESSIONAL ENGINEER Tom R. Mesich No. 46748 Exp. 6-30-15 CIVIL STATE OF CALIFORNIA

6-9-14
PLANS APPROVAL DATE

The State of California or its officers or agents shall not be responsible for the accuracy or completeness of electronic copies of this plan sheet.

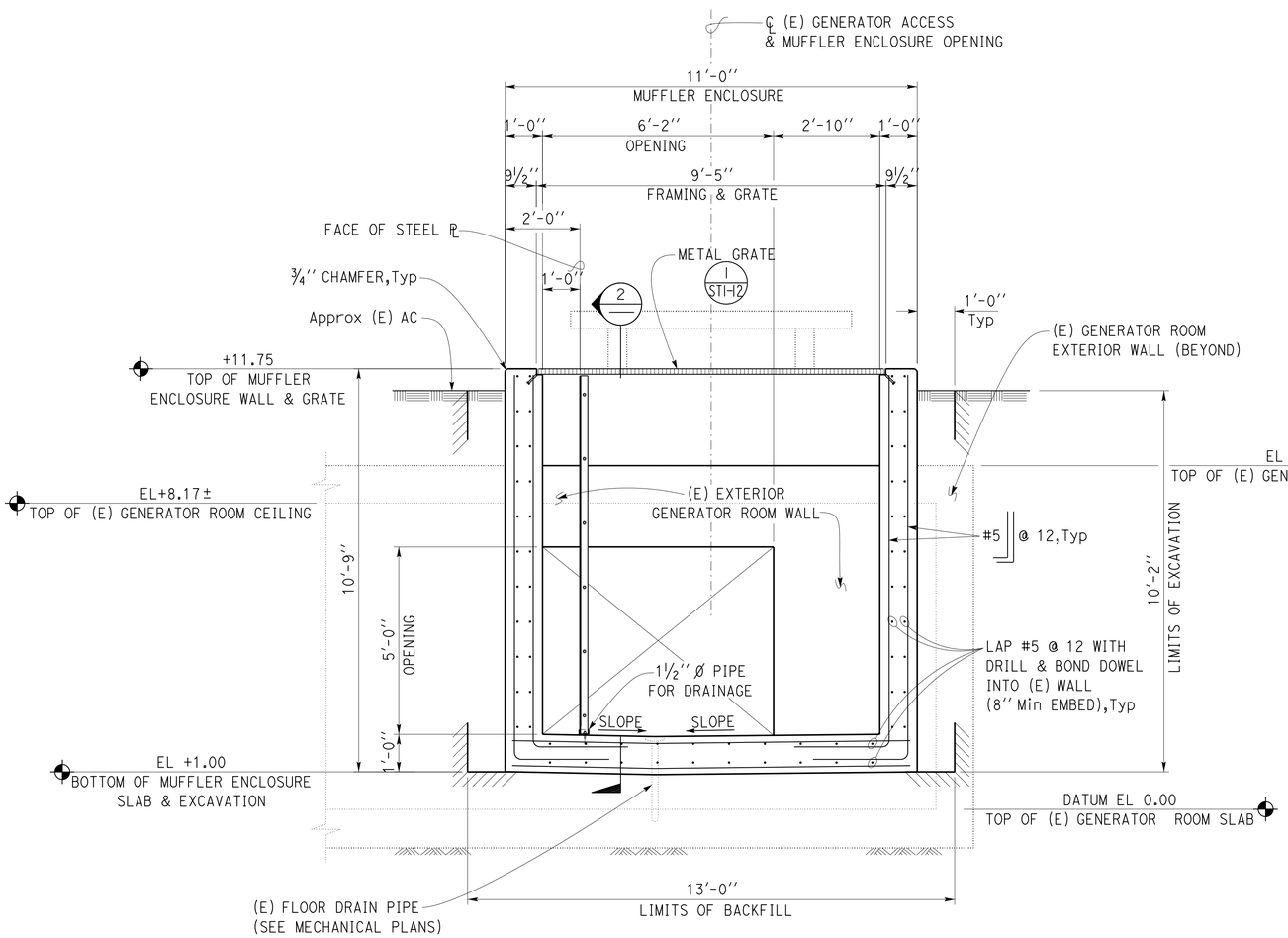

Notes:
1. New stairs not shown for clarity.
2. Wide flange framing at opening not shown for clarity, see 1 STI-13
3. Slope concrete slab towards floor drain.

1 MUFFLER ENCLOSURE SECTION
SCALE ½" = 1' - 0"

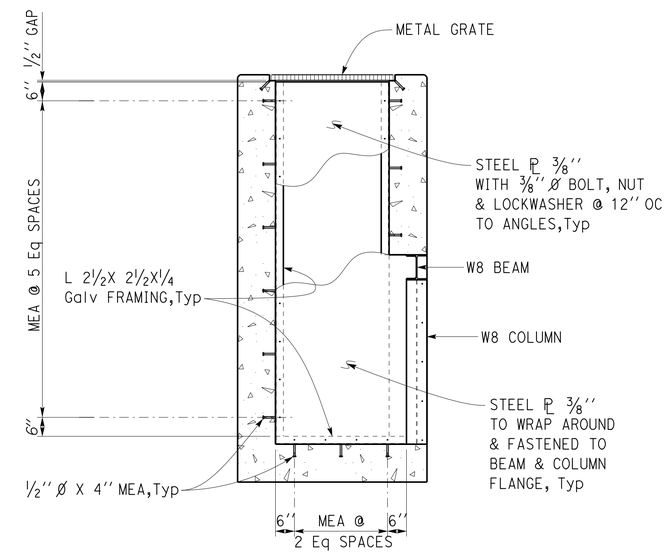

2 STEEL PLATE DETAIL
SCALE ½" = 1' - 0"

Note:
The contractor shall verify all controlling field dimensions before ordering or fabricating any material.

- Indicates limits of structural backfill (pumping plant)

	BY	CHECKED
DESIGN	Tom Mesich	Dai Lu
DETAILS	Pete von Savoye	Dai Lu
QUANTITIES	Tom Mesich	Dai Lu

STATE OF CALIFORNIA
DEPARTMENT OF TRANSPORTATION

DIVISION OF ENGINEERING SERVICES
ARCHITECTURAL AND STRUCTURAL DESIGN

BRIDGE NO. 24-0273W
POST MILE 23.3

"O" STREET PUMPING PLANT
PUMP PLANT
MUFFLER ENCLOSURE SECTION & DETAILS

SHEET ST1-11

TAEMWW Imperial Rev. 7/10

ORIGINAL SCALE IN INCHES FOR REDUCED PLANS 0 1 2 3

UNIT 3599
PROJECT NUMBER & PHASE 03120000581
EA 3F0400

DISREGARD PRINTS BEARING EARLIER REVISION DATES 02-20-14

REVISION DATES (PRELIMINARY STAGE ONLY) SHEET OF

P:\dist_03\0312000058_o_st_pump_house_rehab\expedite\st1_11.dgn

12-JUN-2014 10:33

DIST.	COUNTY	ROUTE	POST MILES TOTAL PROJECT	SHEET NO.	TOTAL SHEETS
03	Sac	5	23.3	25	57

REGISTERED CIVIL ENGINEER DATE

REGISTERED PROFESSIONAL ENGINEER Tom R. Mesich No. 46748 Exp. 6-30-15 CIVIL STATE OF CALIFORNIA

6-9-14
PLANS APPROVAL DATE

The State of California or its officers or agents shall not be responsible for the accuracy or completeness of electronic copies of this plan sheet.

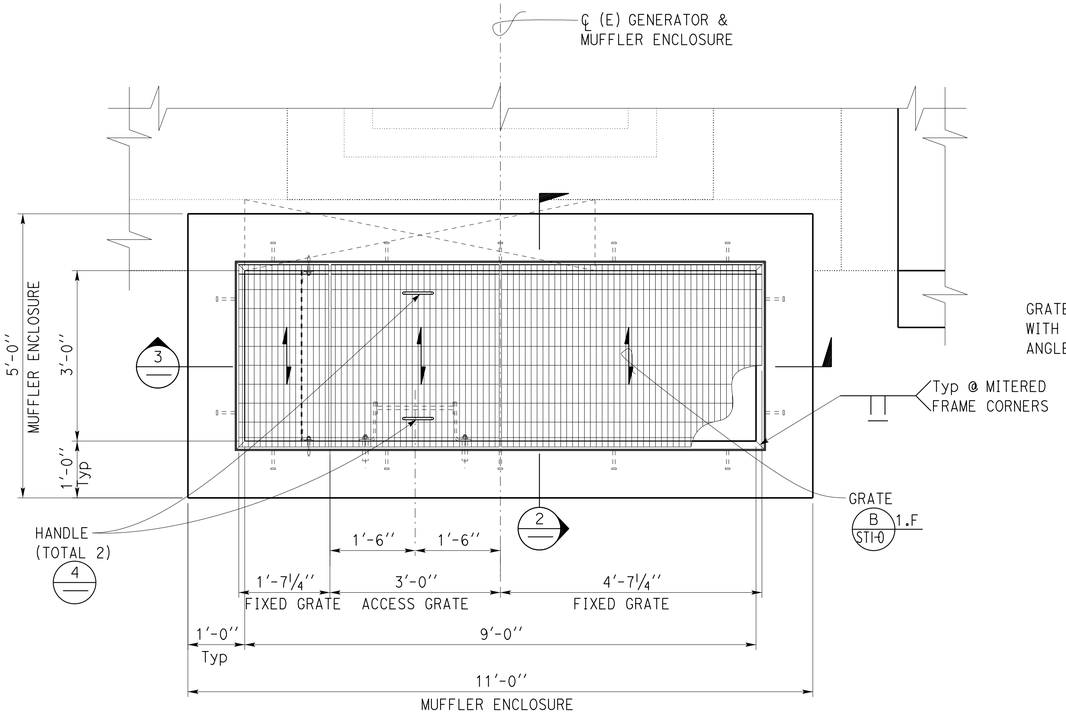

1 MUFFLER ENCLOSURE GRATE PLAN
SCALE ¾"= 1' - 0"

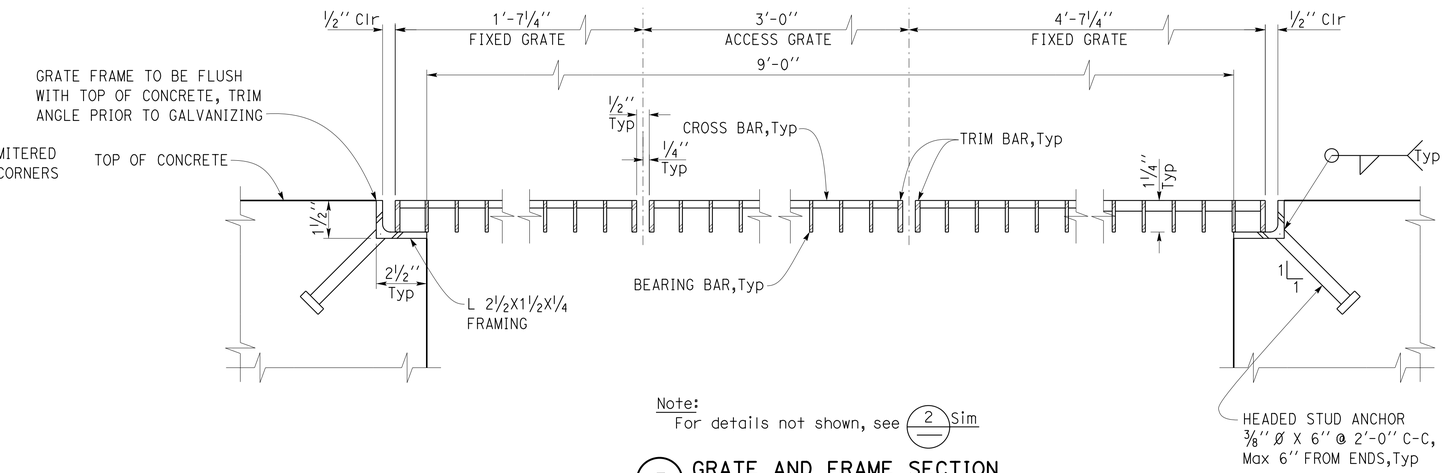

Note:
For details not shown, see 2 Sim

3 GRATE AND FRAME SECTION
SCALE 4"= 1' - 0"

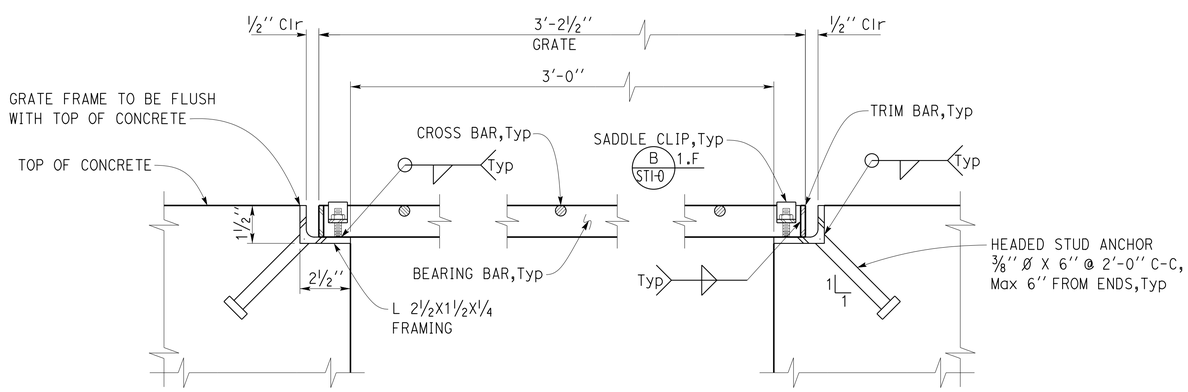

2 GRATE AND FRAME SECTION
SCALE 4"= 1' - 0"

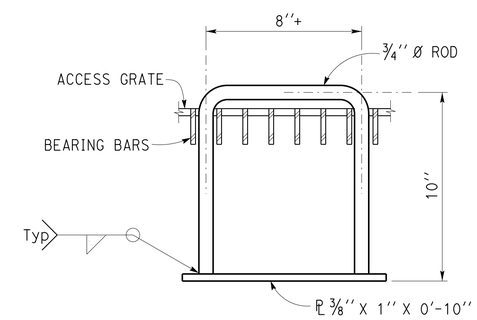

Note:
Access grate shall have two handles located centerally at each end of grate.

4 HANDLE DETAIL
NO SCALE

Note:
The contractor shall verify all controlling field dimensions before ordering or fabricating any material.

	BY	CHECKED
DESIGN	Tom Mesich	Dai Lu
DETAILS	Pete von Savoye	Dai Lu
QUANTITIES	Tom Mesich	Dai Lu

STATE OF CALIFORNIA
DEPARTMENT OF TRANSPORTATION

DIVISION OF ENGINEERING SERVICES
ARCHITECTURAL AND STRUCTURAL DESIGN

BRIDGE NO. 24-0273W
POST MILE 23.3

"O" STREET PUMPING PLANT
PUMP PLANT — GRATE DETAILS

SHEET ST1-12

TAEMWW Imperial Rev. 7/10

ORIGINAL SCALE IN INCHES FOR REDUCED PLANS 0 1 2 3

UNIT 3599
PROJECT NUMBER & PHASE 03120000581
EA 3F0400

DISREGARD PRINTS BEARING EARLIER REVISION DATES → 02-18-14

REVISION DATES (PRELIMINARY STAGE ONLY) SHEET OF

P:\dist_03\0312000058_o_st_pump_house_rehab\expedite\st1_12.dgn

12-JUN-2014 10:33

DIST.	COUNTY	ROUTE	POST MILES TOTAL PROJECT	SHEET NO.	TOTAL SHEETS
03	Sac	5	23.3	26	57

REGISTERED CIVIL ENGINEER DATE

REGISTERED PROFESSIONAL ENGINEER Tom R. Mesich No. 46748 Exp. 6-30-15 CIVIL STATE OF CALIFORNIA

6-9-14
PLANS APPROVAL DATE

The State of California or its officers or agents shall not be responsible for the accuracy or completeness of electronic copies of this plan sheet.

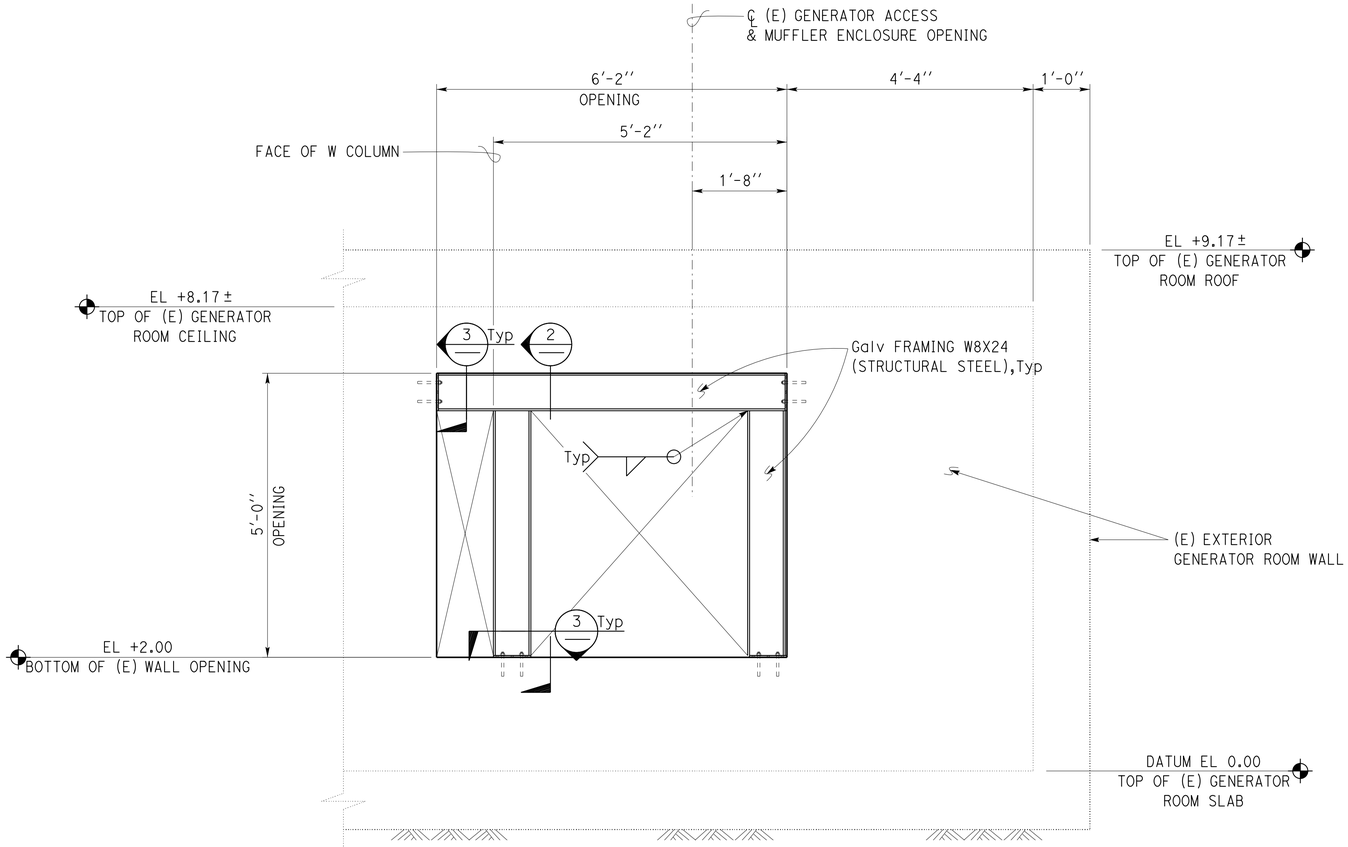

Note:
Muffler enclosure & grate not shown for clarity, see 1/STI-11

1 MUFFLER ENCLOSURE SECTION
SCALE 3/4''= 1' - 0''

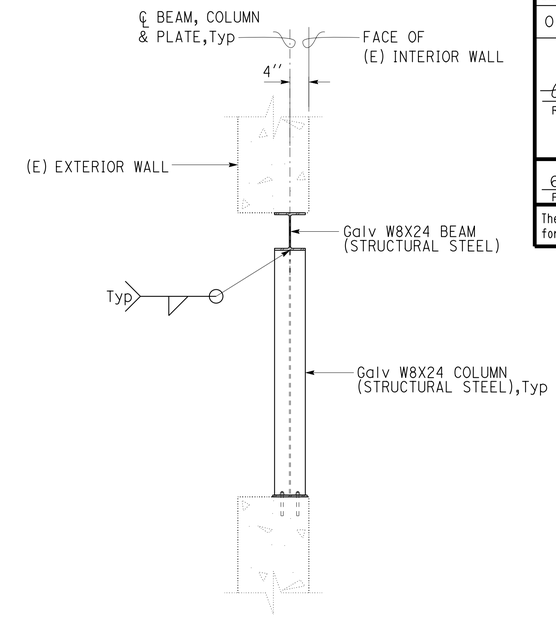

Note:
Muffler enclosure & grate not shown for clarity, see 1/STI-11

2 MUFFLER ENCLOSURE SECTION
SCALE 3/4''= 1' - 0''

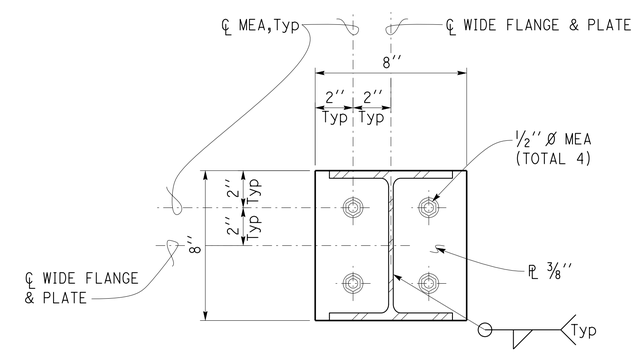

3 WALL ANCHORAGE DETAIL
SCALE 3''= 1' - 0''

Note:
The contractor shall verify all controlling field dimensions before ordering or fabricating any material.

	BY	CHECKED
DESIGN	Tom Mesich	Dai Lu
DETAILS	Pete von Savoye	Dai Lu
QUANTITIES	Tom Mesich	Dai Lu

STATE OF CALIFORNIA
DEPARTMENT OF TRANSPORTATION

DIVISION OF ENGINEERING SERVICES
ARCHITECTURAL AND STRUCTURAL DESIGN

BRIDGE NO. 24-0273W
POST MILE 23.3

"O" STREET PUMPING PLANT
PUMP PLANT
MUFFLER ENCLOSURE OPENING FRAMING DETAILS

SHEET ST1-13

TAEMWW Imperial Rev. 7/10

ORIGINAL SCALE IN INCHES FOR REDUCED PLANS 0 1 2 3

UNIT 3599
PROJECT NUMBER & PHASE 03120000581
EA 3F0400

DISREGARD PRINTS BEARING EARLIER REVISION DATES 02-20-14
REVISION DATES (PRELIMINARY STAGE ONLY) SHEET OF

12-JUN-2014 10:33
P:\dist_03\0312000058_o_st_pump_house_rehab\expedite\st1_13.dgn

DIST.	COUNTY	ROUTE	POST MILES TOTAL PROJECT	SHEET NO.	TOTAL SHEETS
03	Sac	5	23.3	27	57

REGISTERED CIVIL ENGINEER DATE

REGISTERED PROFESSIONAL ENGINEER Tom R. Mesich No. 46748 Exp. 6-30-15 CIVIL STATE OF CALIFORNIA

6-9-14
PLANS APPROVAL DATE

The State of California or its officers or agents shall not be responsible for the accuracy or completeness of electronic copies of this plan sheet.

☆Note:
Unless otherwise noted.

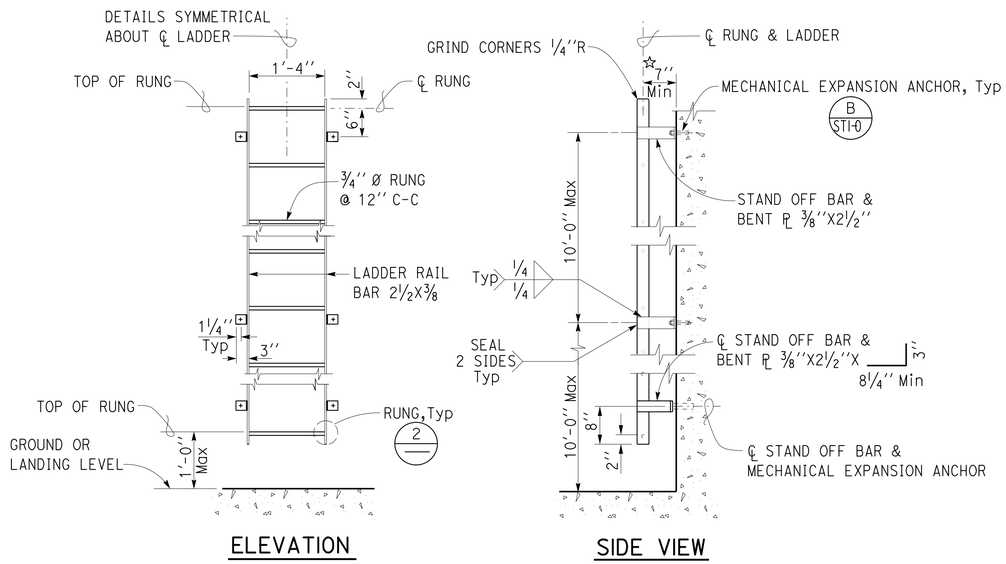

1 LADDER DETAILS
SCALE ¾'' = 1'-0''

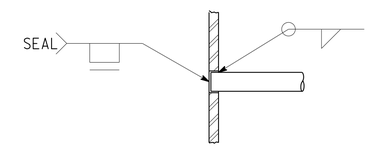

Note:
Inside of ladder rail.

2 RUNG DETAIL
Scale 4'' = 1'-0''

DESIGN	BY Tom Mesich	CHECKED Dai Lu	
DETAILS	BY Pete von Savoye	CHECKED Dai Lu	
QUANTITIES	BY Tom Mesich	CHECKED Dai Lu	

STATE OF CALIFORNIA
DEPARTMENT OF TRANSPORTATION

DIVISION OF ENGINEERING SERVICES
ARCHITECTURAL AND STRUCTURAL DESIGN

BRIDGE NO. 24-0273W
POST MILE 23.3

"O" STREET PUMPING PLANT
PUMP PLANT
LADDER DETAILS

SHEET ST1-14

TAEMWW Imperial Rev. 7/10

ORIGINAL SCALE IN INCHES FOR REDUCED PLANS 0 1 2 3

UNIT 3599
PROJECT NUMBER & PHASE 03120000581
EA 3F0400

DISREGARD PRINTS BEARING EARLIER REVISION DATES → 02-18-14

REVISION DATES (PRELIMINARY STAGE ONLY) SHEET OF

P:\dist_03\0312000058_o_st_pump_house_rehab\expedite\st1_14.dgn

12-JUN-2014 10:33

Dist	COUNTY	ROUTE	POST MILES TOTAL PROJECT	SHEET No.	TOTAL SHEETS
03	Sac	5	23.3	28	57

CALIFORNIA STATE FIRE MARSHAL APPROVED FIRE AND PANIC ONLY
Approval of this plan does not authorize or approve any omission or deviation from applicable regulations. Final approval is subject to field inspection. One set of approved plans shall be available on the project site at all times.
Reviewed by: FRANCIS SOLICH
Approval date: 02-05-14

Michael R. White 4/1/2014
REGISTERED MECHANICAL ENGINEER DATE

6-9-14
PLANS APPROVAL DATE

REGISTERED PROFESSIONAL ENGINEER Michael R. White No. 29108 Exp. 06-30-14 MECH STATE OF CALIFORNIA

The State of California or its officers or agents shall not be responsible for the accuracy or completeness of scanned copies of this plan sheet.

ABBREVIATIONS

℄	Centerline
ℙ	Plate
Ø	Diameter
CY	Cubic Yard
EA	Each
EL	Elevation
FL	Flowline
GSP	Galvanized Steel Pipe
LB	Pounds
LF	Linear Foot
LOEP	Low Edge of Pavement
MAX	Maximum
MIN	Minimum
O.D.	Outside Diameter
SS	Stainless Steel
TYP	Typical

EQUIPMENT SCHEDULE

EQUIPMENT	PUMP PERFORMANCE		ELECTRICAL CHARACTERISTICS
	PUMPING RATE (Gallons per Minute)	TOTAL DYNAMIC HEAD (Feet)	460 VAC, 3 phase, 60 Hz 700 to 900 RPM (sync.), 100 hp (max)
Drainage Pumps No. 1 and 2	4000	58.0	
	5000 (design point)	54.0	
	6000	49.0	

RAINFALL DATA

Storm Time (min)	R_{50} (in)
5	3.680
10	2.640
15	2.130
30	1.470
60	1.030

Storage: 30,000 cubic feet in Storage Box
Drainage area: 23.68 Acres, Impervious area 21.31 Acres
Run-off factor 0.9
50-year storm protection provided

For underground electrical conduits, see "Electrical Plans"

	BY	CHECKED
DESIGN	Michael White	Alan M Torres
DETAILS	Michael White	Alan M Torres
QUANTITIES	Michael White	Alan M Torres

ORIGINAL SCALE IN INCHES FOR REDUCED PLANS 0 1 2 3

STATE OF CALIFORNIA
DEPARTMENT OF TRANSPORTATION

DIVISION OF ENGINEERING SERVICES
ELECTRICAL-MECHANICAL-WATER AND WASTEWATER DESIGN

UNIT: 3618 CONTRACT No.: 3F0401
PROJECT NUMBER & PHASE: 03120000581

BRIDGE NO. 24-0273W
POST MILE 23.3

"O" STREET PUMPING PLANT
PUMP PLANT
DESIGN NOTES

SHEET M-0

DISREGARD PRINTS BEARING EARLIER REVISION DATES → 11-01-13 11-15-13 12-06-13 12-16-13 1-13-14

REVISION DATES (PRELIMINARY STAGE ONLY) SHEET OF

10-JUN-2014 06:20

C:\expedite\03120000581_o_street_pump_house_rehab\m_0.dgn

Dist	COUNTY	ROUTE	POST MILES TOTAL PROJECT	SHEET No.	TOTAL SHEETS
03	Sac	5	23.3	29	57

CALIFORNIA STATE FIRE MARSHAL APPROVED FIRE AND PANIC ONLY
Approval of this plan does not authorize or approve any omission or deviation from applicable regulations. Final approval is subject to field inspection. One set of approved plans shall be available on the project site at all times.
Reviewed by: FRANCIS SOLICH
Approval date: 02-05-14

Michael R. White 4/1/2014
REGISTERED MECHANICAL ENGINEER DATE

6-9-14
PLANS APPROVAL DATE

REGISTERED PROFESSIONAL ENGINEER Michael R. White No. 29108 Exp. 06-30-14 MECH STATE OF CALIFORNIA

The State of California or its officers or agents shall not be responsible for the accuracy or completeness of scanned copies of this plan sheet.

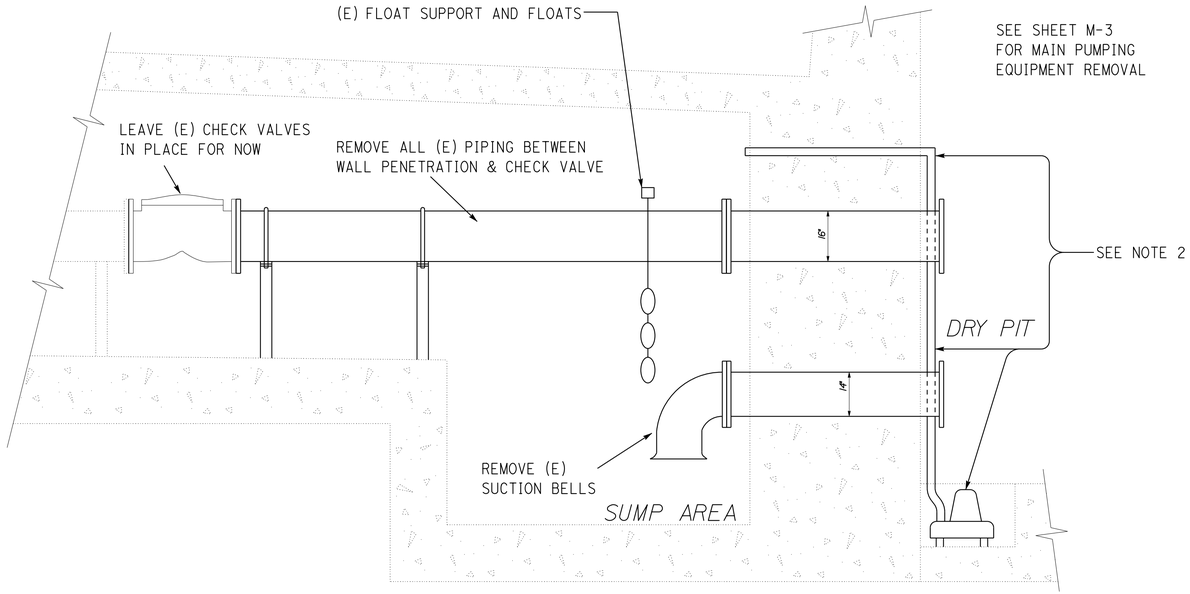

1 PIPE REMOVAL IN THE WET PIT
NO SCALE

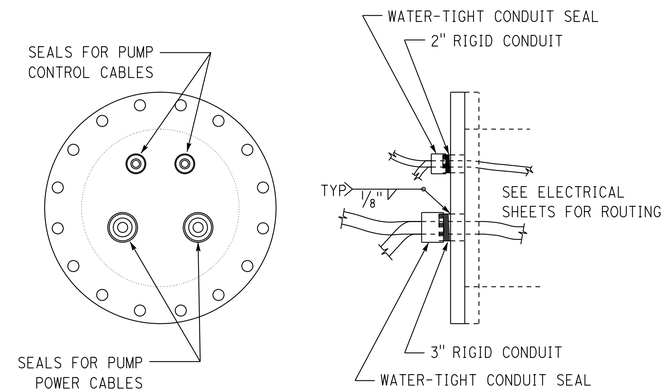

3 MODIFIED 16" BLIND FLANGE
NO SCALE

Notes:

1. Salvage existing suction bells.
2. Remove the existing sump pump, check valve, and associated piping to the last joint before it penetrates the wall to the wet side.
3. Remove the existing discharge piping from the wall penetration to the existing check valves. Support existing check valve. Remove intermediate pipe supports.
4. Cover each of the now-open penetrating pipes with a gasketed blind flange on the wet pit side. One of the discharge pipes will utilize the modified blind flange as shown in detail 3.

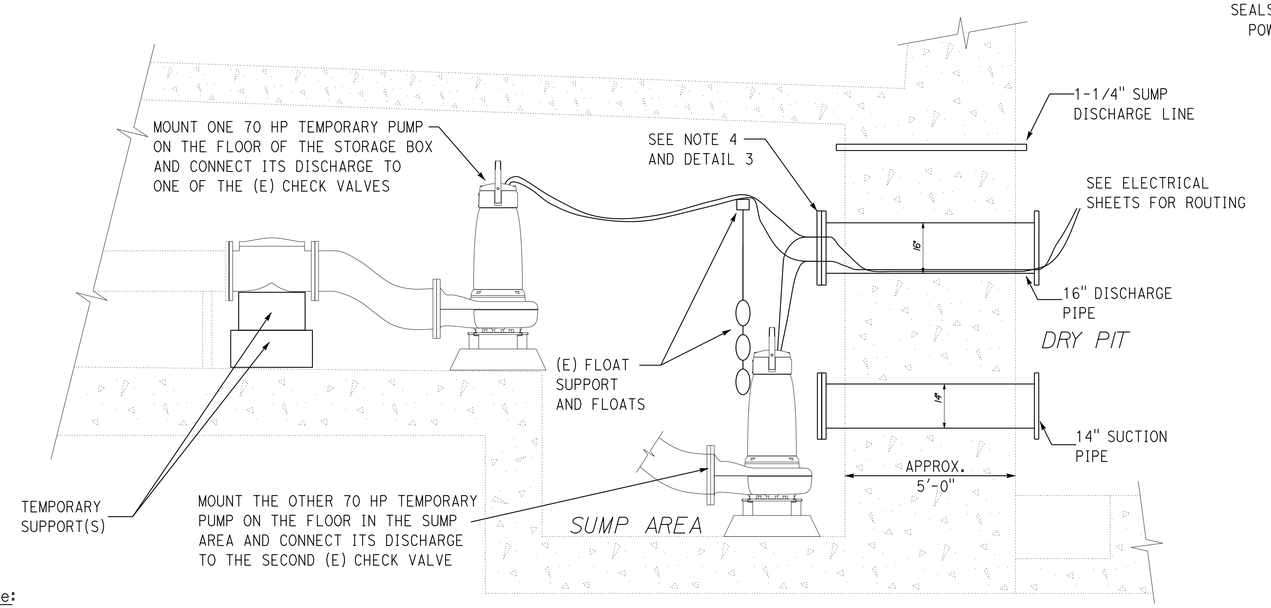

2 TEMPORARY PUMPS IN THE WET PIT
NO SCALE

TEMPORARY PUMP EQUIPMENT

PUMPS 1 & 2

70 hp (minimum), 460 VAC 3 phase, 60 Hz

MINIMUM PUMPING RATES

4200 GPM AT 50 FT OF TOTAL DYNAMIC HEAD
5040 GPM AT 42 FT OF TOTAL DYNAMIC HEAD

Non-clog, open impeller style, designed for storm water or waste water applications

Note:
The contractor shall verify all controlling field dimensions before ordering or fabricating any material.

DESIGN SUPERVISOR
DESIGN ENGINEER

	BY	CHECKED
DESIGN	Michael White	Alan M Torres
DETAILS	Michael White	Alan M Torres
QUANTITIES	Michael White	Alan M Torres

ORIGINAL SCALE IN INCHES FOR REDUCED PLANS 0 1 2 3

STATE OF CALIFORNIA
DEPARTMENT OF TRANSPORTATION

DIVISION OF ENGINEERING SERVICES
ELECTRICAL-MECHANICAL-WATER AND WASTEWATER DESIGN

UNIT: 3618 CONTRACT No.: 3F0401
PROJECT NUMBER & PHASE: 03120000581

BRIDGE NO. 24-0273W
POST MILE 23.3

"O" STREET PUMPING PLANT
PUMP PLANT | WET SIDE PIPES & TEMPORARY PUMPS

SHEET M-1

DISREGARD PRINTS BEARING EARLIER REVISION DATES → REVISION DATES (PRELIMINARY STAGE ONLY) 11-06-13 11-15-13 12-06-13 12-16-13 1-13-14

SHEET OF

10-JUN-2014 06:16

C:\expedite\03120000581_o_street_pump_house_rehab\m_01.dgn

Dist	COUNTY	ROUTE	POST MILES TOTAL PROJECT	SHEET No.	TOTAL SHEETS
03	Sac	5	23.3	30	57

Michael R. White 4/1/2014
REGISTERED MECHANICAL ENGINEER DATE

6-9-14
PLANS APPROVAL DATE

REGISTERED PROFESSIONAL ENGINEER Michael R. White No. 29108 Exp. 06-30-14 MECH STATE OF CALIFORNIA

The State of California or its officers or agents shall not be responsible for the accuracy or completeness of scanned copies of this plan sheet.

CALIFORNIA STATE FIRE MARSHAL APPROVED FIRE AND PANIC ONLY
Approval of this plan does not authorize or approve any omission or deviation from applicable regulations. Final approval is subject to field inspection. One set of approved plans shall be available on the project site at all times.
Reviewed by: FRANCIS SOLICH
Approval date: 02-05-14

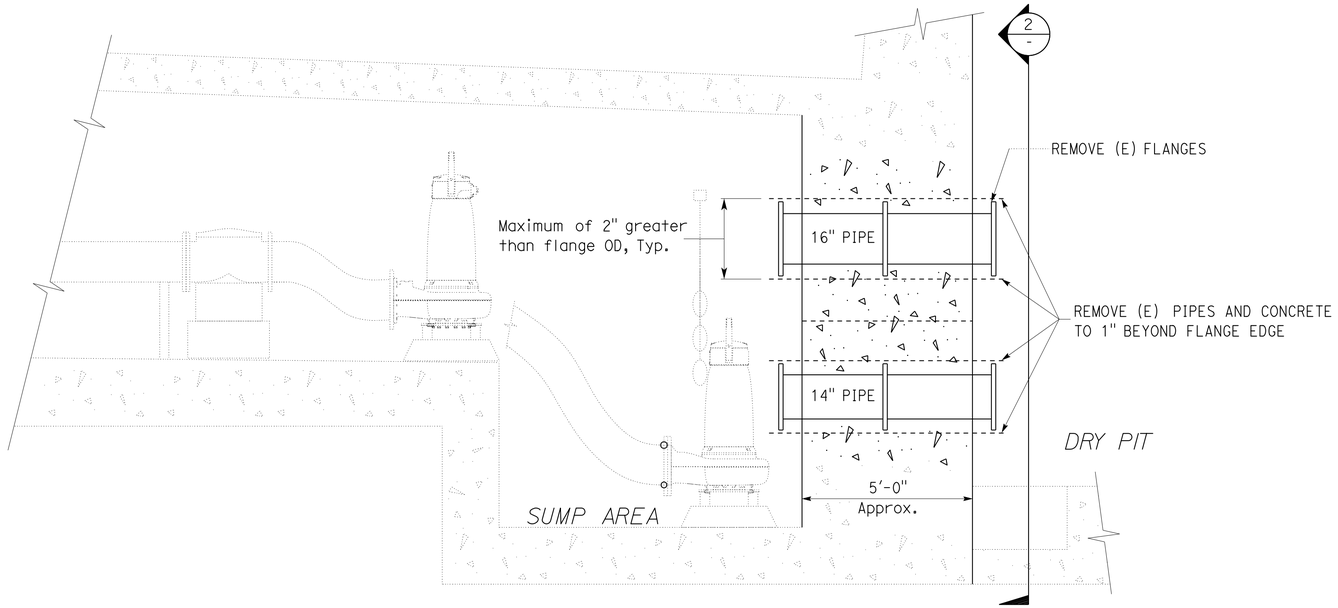

1 PENETRATING PIPE REPLACEMENT
NO SCALE

NOTE: AFTER FABRICATION, HOT DIP GALVANIZED

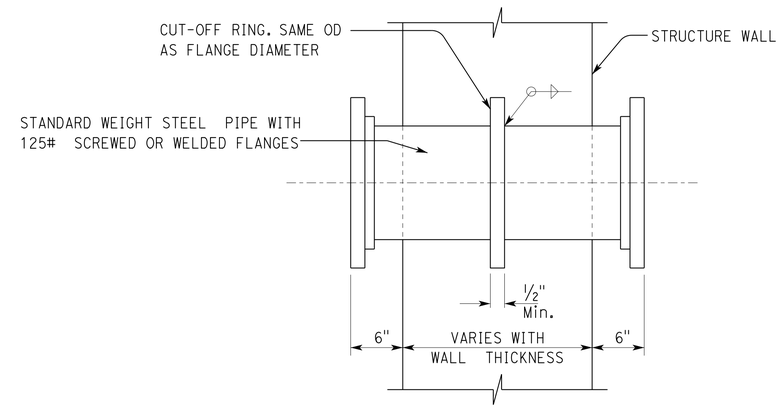

4 FABRICATED WALL FITTING
NO SCALE

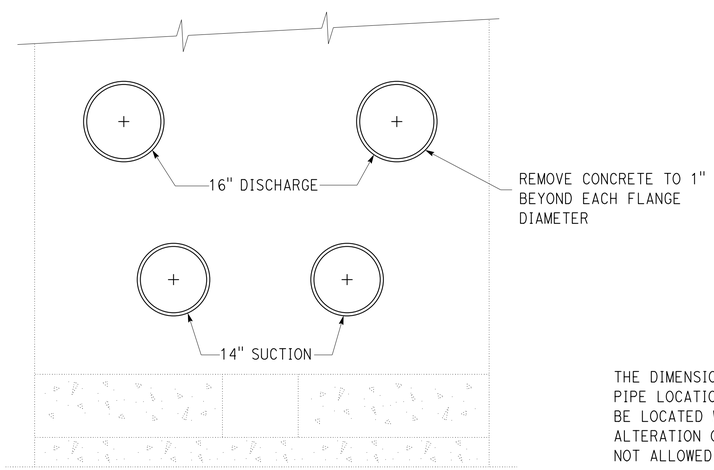

2 PENETRATING PIPE REMOVAL
NO SCALE

THE DIMENSIONS SHOWN ARE FOR THE CURRENT PIPE LOCATIONS. THE REPLACEMENT PIPES MAY BE LOCATED WITHIN +/- 1" OF EACH DIMENSION. ALTERATION OF THE CUT-OFF RING IS NOT ALLOWED.

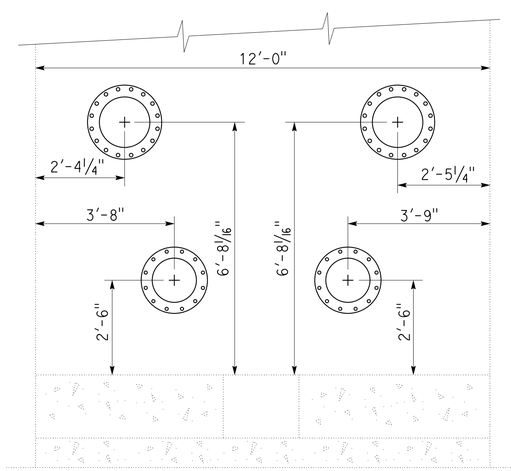

3 PENETRATING PIPE REPLACEMENT
NO SCALE

Notes:

1. Remove and replace the suction and discharge piping that penetrates the wall per the details shown on this sheet unless the Engineer examines them and determines that they may be left in place.
2. The replacement pipes do not have to be perfectly centered or back to the exact previous location. They may be moved within the limits of the hole though the concrete wall if it provides a more desirable and symmetrical layout for the new pumps. It is critical that the flanges on the dry pit side be as close as possible to perpindicular to the floor of the dry pit.
3. Grout the annular space between the wall and the new pipes with mortar or grout. The minimum 28-day compressive strength must be 3,500 psi.

Note:
The contractor shall verify all controlling field dimensions before ordering or fabricating any material.

	BY	CHECKED
DESIGN	Michael White	Alan M Torres
DETAILS	Michael White	Alan M Torres
QUANTITIES	Michael White	Alan M Torres

ORIGINAL SCALE IN INCHES FOR REDUCED PLANS 0 1 2 3

STATE OF CALIFORNIA
DEPARTMENT OF TRANSPORTATION

DIVISION OF ENGINEERING SERVICES
ELECTRICAL-MECHANICAL-WATER AND WASTEWATER DESIGN

UNIT: 3618 CONTRACT No.: 3F0401
PROJECT NUMBER & PHASE: 03120000581

BRIDGE NO. 24-0273W
POST MILE 23.3

"O" STREET PUMPING PLANT
PUMP PLANT
PIPE PENETRATIONS

SHEET M-2

DISREGARD PRINTS BEARING EARLIER REVISION DATES → REVISION DATES (PRELIMINARY STAGE ONLY) 11-06-13 11-15-13 12-06-13 12-16-13 1-13-14 SHEET OF

C:\expedite\03120000581_o_street_pump_house_rehab\m_02.dgn

10-JUN-2014 06:28

Dist	COUNTY	ROUTE	POST MILES TOTAL PROJECT	SHEET No.	TOTAL SHEETS
03	Sac	5	23.3	31	57

Michael R. White 4/1/2014
REGISTERED MECHANICAL ENGINEER DATE

6-9-14
PLANS APPROVAL DATE

REGISTERED PROFESSIONAL ENGINEER
Michael R. White
No. 29108
Exp. 06-30-14
MECH
STATE OF CALIFORNIA

The State of California or its officers or agents shall not be responsible for the accuracy or completeness of scanned copies of this plan sheet.

CALIFORNIA STATE FIRE MARSHAL APPROVED FIRE AND PANIC ONLY
Approval of this plan does not authorize or approve any omission or deviation from applicable regulations. Final approval is subject to field inspection. One set of approved plans shall be available on the project site at all times.
Reviewed by: FRANCIS SOLICH
Approval date: 02-05-14

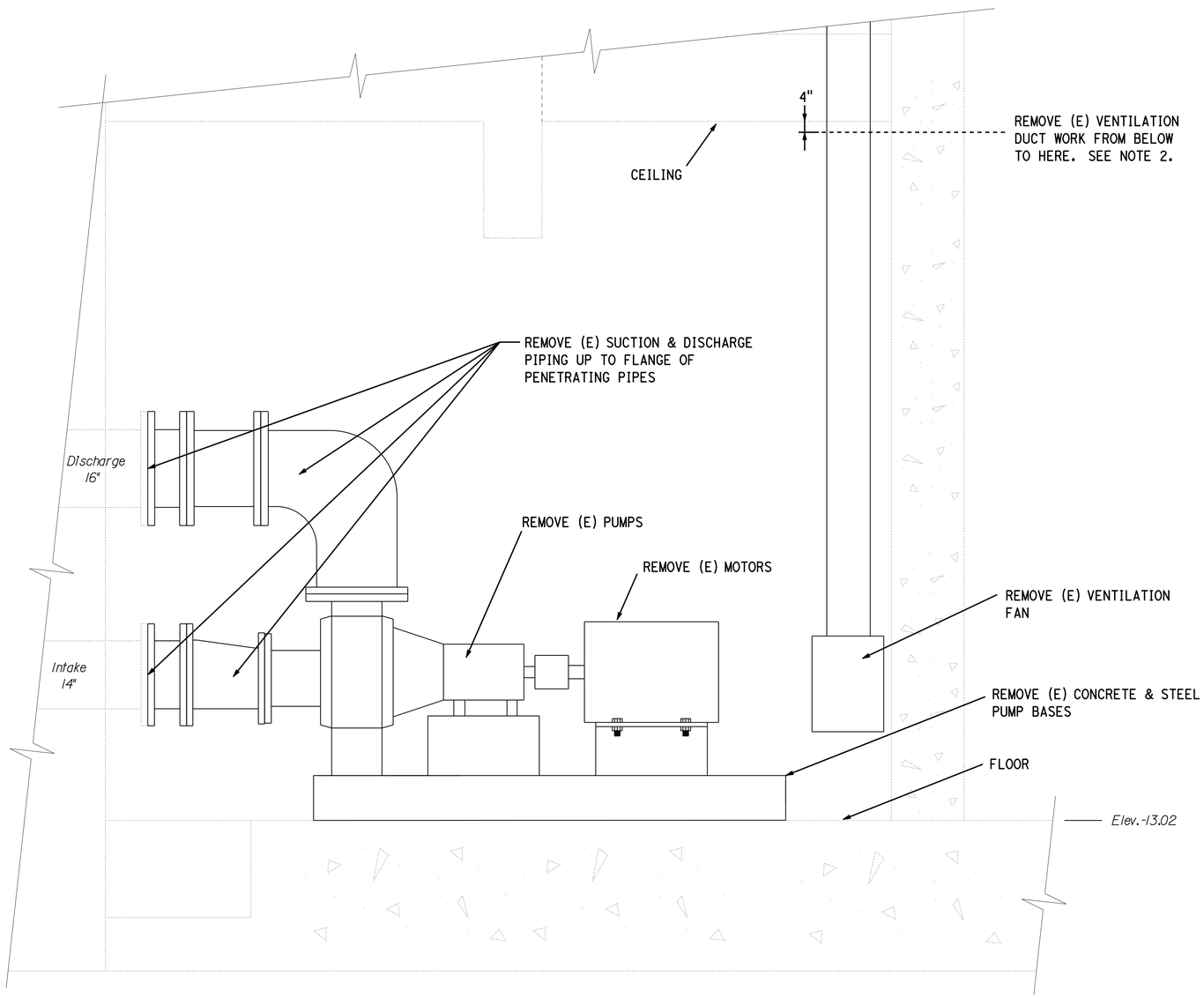

1 EXISTING PUMP EQUIPMENT REMOVAL
No Scale

Notes:

1. Salvage existing motor, pumps, couplers, and associated piping to the flange of the pipes which penetrate the dry pit wall from the wet side. See electrical sheets for conduit removal.
2. Remove existing ventilation fan and conduit. Remove existing duct work as shown.
3. After removal of the concrete pump bases, cut off any protruding items to flush with the floor.

Note:
The contractor shall verify all controlling field dimensions before ordering or fabricating any material.

	BY	CHECKED
DESIGN	Michael White	Alan M Torres
DETAILS	Michael White	Alan M Torres
QUANTITIES	Michael White	Alan M Torres

ORIGINAL SCALE IN INCHES FOR REDUCED PLANS 0 1 2 3

STATE OF CALIFORNIA
DEPARTMENT OF TRANSPORTATION

DIVISION OF ENGINEERING SERVICES
ELECTRICAL-MECHANICAL-WATER AND WASTEWATER DESIGN

UNIT: 3618 CONTRACT No.: 3F0401
PROJECT NUMBER & PHASE: 03120000581

BRIDGE NO. 24-0273W
POST MILE 23.3

"O" STREET PUMPING PLANT
PUMP PLANT
EXISTING PUMP REMOVAL

SHEET M-3

DISREGARD PRINTS BEARING EARLIER REVISION DATES → REVISION DATES (PRELIMINARY STAGE ONLY) 11-06-13 11-15-13 12-06-13 12-16-13 1-13-14 SHEET OF

C:\expedite\03120000581_o_street_pump_house_rehab\m_03.dgn

10-JUN-2014 06:28

Dist	COUNTY	ROUTE	POST MILES TOTAL PROJECT	SHEET No.	TOTAL SHEETS
03	Sac	5	23.3	32	57

CALIFORNIA STATE FIRE MARSHAL APPROVED FIRE AND PANIC ONLY
Approval of this plan does not authorize or approve any omission or deviation from applicable regulations. Final approval is subject to field inspection. One set of approved plans shall be available on the project site at all times.
Reviewed by: FRANCIS SOLICH
Approval date: 02-05-14

Michael R. White 4/1/2014
REGISTERED MECHANICAL ENGINEER DATE

6-9-14
PLANS APPROVAL DATE

REGISTERED PROFESSIONAL ENGINEER Michael R. White No. 29108 Exp. 06-30-14 MECH STATE OF CALIFORNIA

The State of California or its officers or agents shall not be responsible for the accuracy or completeness of scanned copies of this plan sheet.

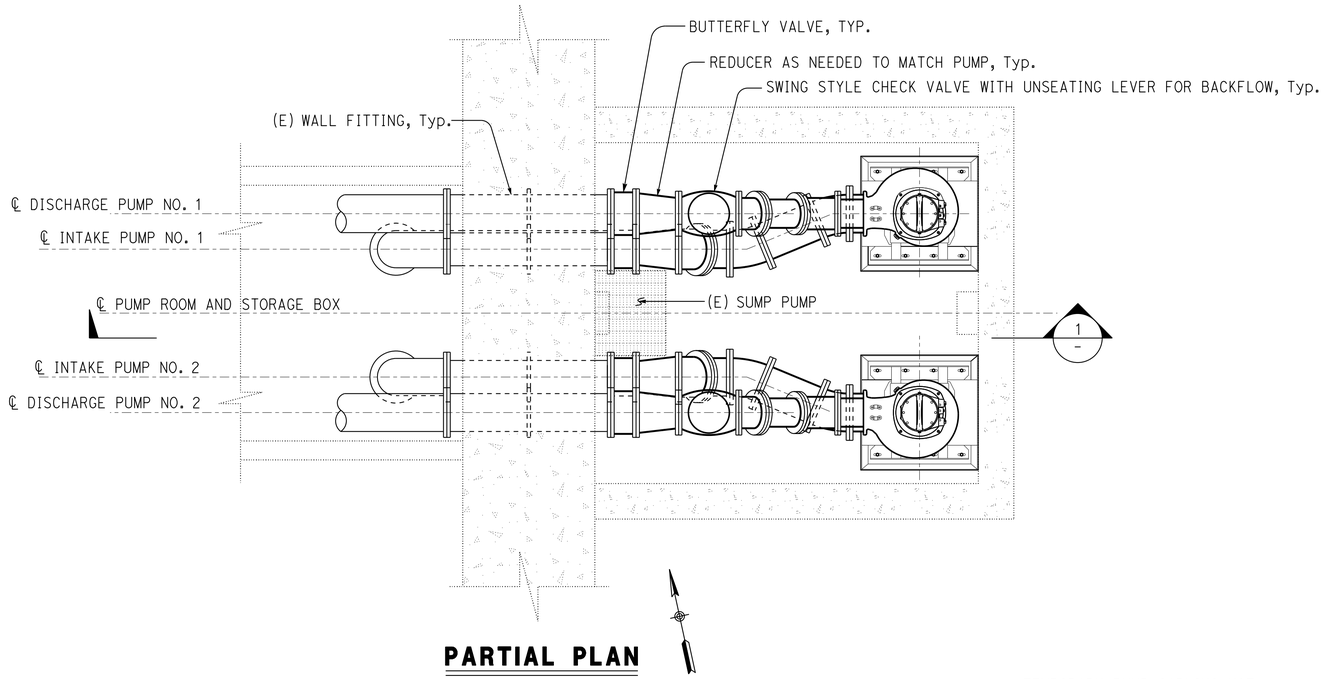

PARTIAL PLAN

3/8" = 1'-0"

Notes:

1. The pumps are to be set as close to the East wall as possible.
2. Align the pumps so there is little or no horizontal offset of the discharge piping. It will still require a vertical offset of the discharge piping.
3. The suction side piping will require both vertical and horizontal offsets.
4. The pump placement and space constraints will require the use of custom-made pipe sections. Any such pipe must be galvanized after fabrication. Provide a vibration-resistant support between the pump room concrete floor and the suction-side spool section for each pump. Provide a 3/4" minimum diameter vertical support with a turnbuckle between the pump room transverse concrete beam along the ceiling to the discharge-side spool section for each pump.
5. The power and control cables for the temporary pumps may be routed through the butterfly valve and through the top of the check valve so that the new pump piping may be completed prior to removal of the temporary pumps. Lock the butterfly valve open and block the check valve disc open to prevent cable damage.

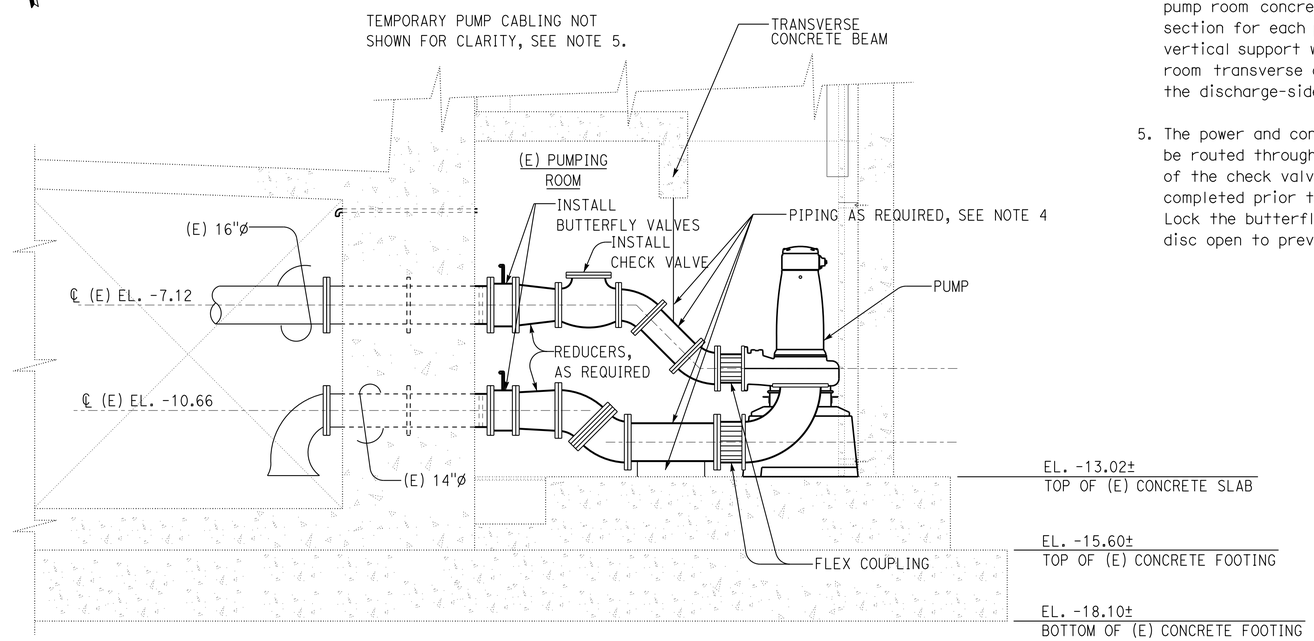

1 SECTION

3/8" = 1'-0"

Note:
The contractor shall verify all controlling field dimensions before ordering or fabricating any material.

	BY	CHECKED
DESIGN	Michael White	Alan M Torres
DETAILS	Michael White	Alan M Torres
QUANTITIES	Michael White	Alan M Torres

ORIGINAL SCALE IN INCHES FOR REDUCED PLANS 0 1 2 3

STATE OF CALIFORNIA
DEPARTMENT OF TRANSPORTATION

DIVISION OF ENGINEERING SERVICES
ELECTRICAL-MECHANICAL-WATER AND WASTEWATER DESIGN

UNIT: 3618 CONTRACT No.: 3F0401
PROJECT NUMBER & PHASE: 03120000581

BRIDGE NO. 24-0273W
POST MILE 23.3

"O" STREET PUMPING PLANT
PUMP PLANT — NEW PUMPING EQUIPMENT

SHEET M-4

DISREGARD PRINTS BEARING EARLIER REVISION DATES → 11-06-13 11-15-13 12-06-13 12-16-13 1-13-14 3-26-14

REVISION DATES (PRELIMINARY STAGE ONLY) SHEET OF

12-JUN-2014 10:34
C:\expedite\03120000581_o_street_pump_house_rehab\m_04.dgn

Dist	COUNTY	ROUTE	POST MILES TOTAL PROJECT	SHEET No.	TOTAL SHEETS
03	Sac	5	23.3	33	57

Michael R. White 4/1/2014
REGISTERED MECHANICAL ENGINEER DATE

6-9-14
PLANS APPROVAL DATE

REGISTERED PROFESSIONAL ENGINEER Michael R. White No. 29108 Exp. 06-30-14 MECH STATE OF CALIFORNIA

The State of California or its officers or agents shall not be responsible for the accuracy or completeness of scanned copies of this plan sheet.

CALIFORNIA STATE FIRE MARSHAL APPROVED FIRE AND PANIC ONLY
Approval of this plan does not authorize or approve any omission or deviation from applicable regulations. Final approval is subject to field inspection. One set of approved plans shall be available on the project site at all times.
Reviewed by: FRANCIS SOLICH
Approval date: 02-05-14

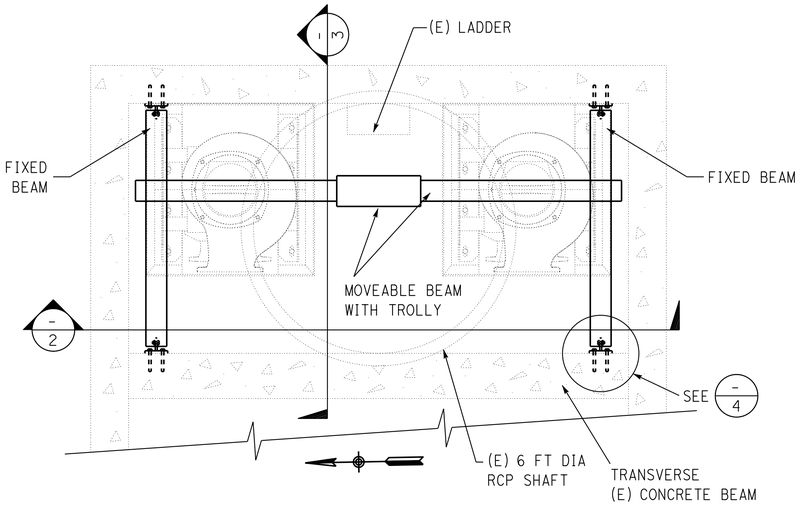

1 NEW CRANE SYSTEM - PLAN
NO SCALE

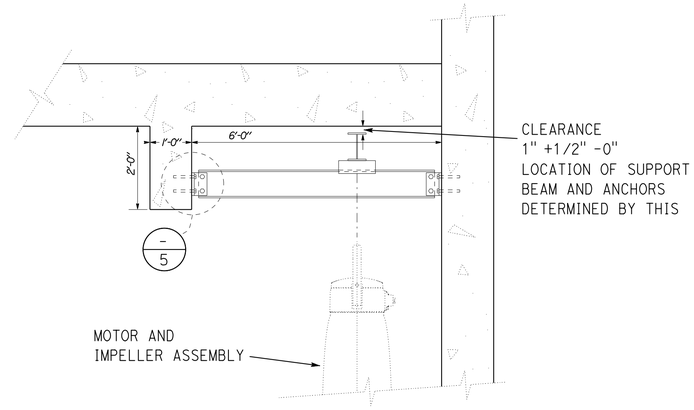

3 NEW CRANE SYSTEM - SECTION
NO SCALE

Note:

1. Angle brackets and all beams must be galvanized.

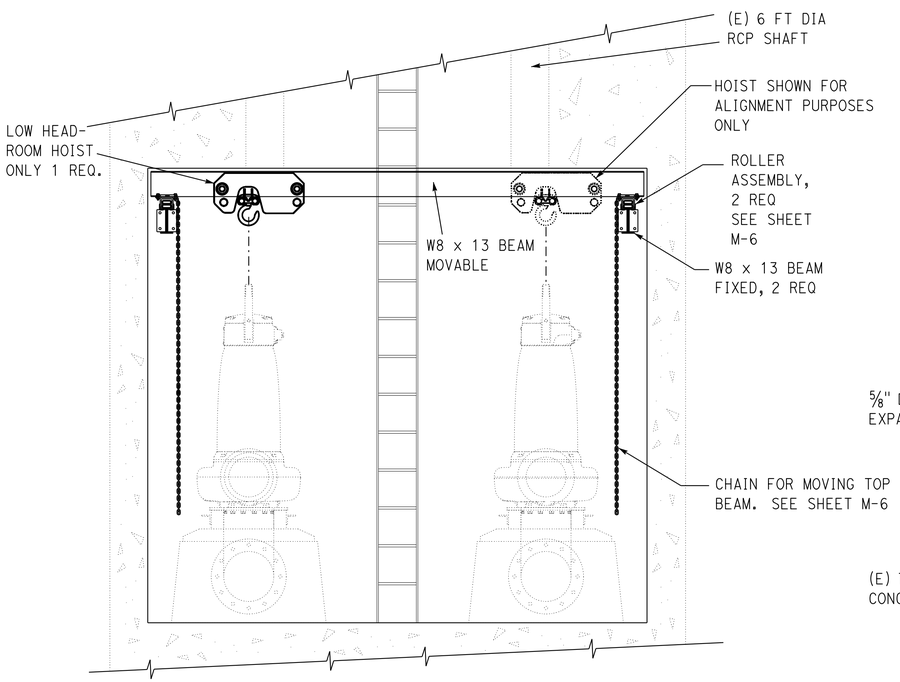

2 NEW CRANE SYSTEM - ELEVATION
1/2" = 1'

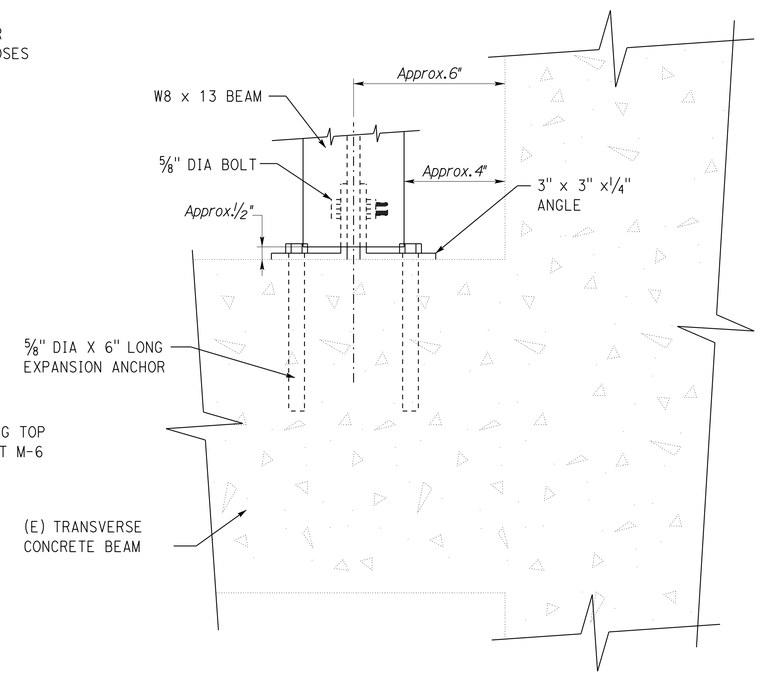

4 FIXED BEAM ANCHOR - PLAN
1" = 1'

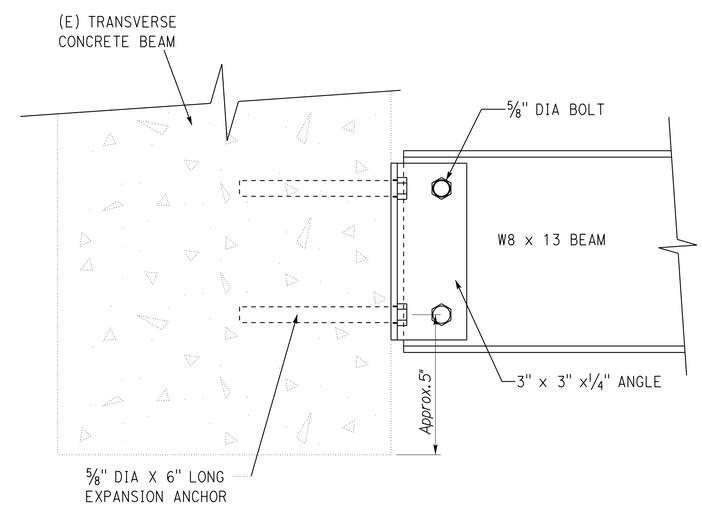

5 FIXED BEAM ANCHOR - ELEVATION
1" = 1'

Note:
The contractor shall verify all controlling field dimensions before ordering or fabricating any material.

	BY	CHECKED
DESIGN	Michael White	Alan M Torres
DETAILS	Michael White	Alan M Torres
QUANTITIES	Michael White	Alan M Torres

ORIGINAL SCALE IN INCHES FOR REDUCED PLANS 0 1 2 3

STATE OF CALIFORNIA
DEPARTMENT OF TRANSPORTATION

DIVISION OF ENGINEERING SERVICES
ELECTRICAL-MECHANICAL-WATER AND WASTEWATER DESIGN

UNIT: 3618 CONTRACT No.: 3F0401
PROJECT NUMBER & PHASE: 03120000581

BRIDGE NO. 24-0273W
POST MILE 23.3

"O" STREET PUMPING PLANT
PUMP PLANT
EQUIPMENT LIFTING SYSTEM I

SHEET M-5

DISREGARD PRINTS BEARING EARLIER REVISION DATES
REVISION DATES (PRELIMINARY STAGE ONLY) 11-06-13 11-15-13 12-06-13 12-16-13 1-13-14
SHEET OF

10-JUN-2014 06:29
C:\expedite\03120000581_o_street_pump_house_rehab\m_05.dgn

Dist	COUNTY	ROUTE	POST MILES TOTAL PROJECT	SHEET No.	TOTAL SHEETS
03	Sac	5	23.3	34	57

CALIFORNIA STATE FIRE MARSHAL APPROVED FIRE AND PANIC ONLY
Approval of this plan does not authorize or approve any omission or deviation from applicable regulations. Final approval is subject to field inspection. One set of approved plans shall be available on the project site at all times.
Reviewed by: FRANCIS SOLICH
Approval date: 02-05-14

Michael R. White 4/1/2014
REGISTERED MECHANICAL ENGINEER DATE

6-9-14
PLANS APPROVAL DATE

REGISTERED PROFESSIONAL ENGINEER Michael R. White No. 29108 Exp. 06-30-14 MECH STATE OF CALIFORNIA

The State of California or its officers or agents shall not be responsible for the accuracy or completeness of scanned copies of this plan sheet.

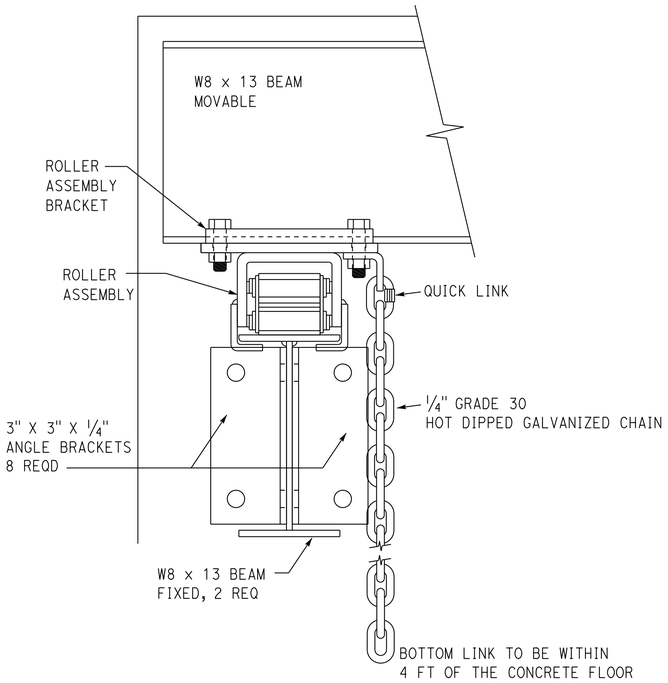

1 NEW CRANE SYSTEM - ELEVATION
1" = 1'

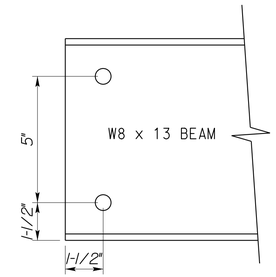

4 FIXED BEAM DETAILS
NO SCALE

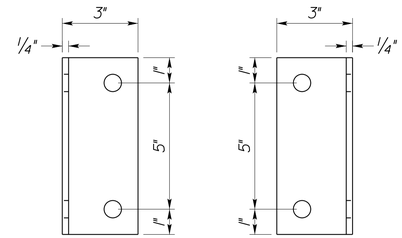

5 BRACKET DETAILS
NO SCALE

Note:

1. All fabricated pieces must be galvanized.

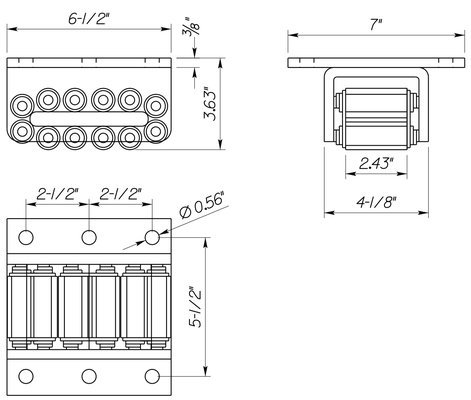

2 UNMODIFIED ROLLER ASSEMBLY
1" = 1'

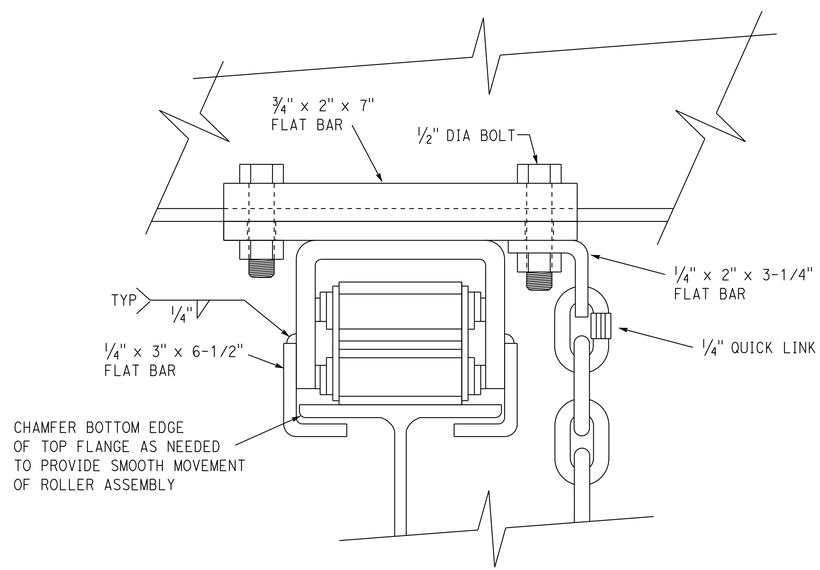

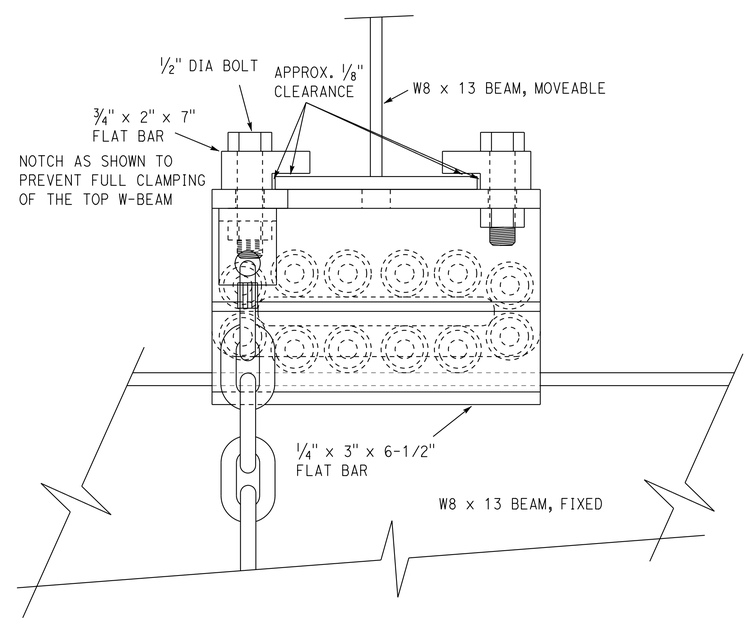

3 ROLLER ASSEMBLY MODIFICATIONS
2" = 1'

Note:
The contractor shall verify all controlling field dimensions before ordering or fabricating any material.

	BY	CHECKED
DESIGN	Michael White	Alan M Torres
DETAILS	Michael White	Alan M Torres
QUANTITIES	Michael White	Alan M Torres

ORIGINAL SCALE IN INCHES FOR REDUCED PLANS 0 1 2 3

STATE OF CALIFORNIA
DEPARTMENT OF TRANSPORTATION

DIVISION OF ENGINEERING SERVICES
ELECTRICAL-MECHANICAL-WATER AND WASTEWATER DESIGN

UNIT: 3618 CONTRACT No.: 3F0401
PROJECT NUMBER & PHASE: 03120000581

BRIDGE NO. 24-0273W
POST MILE 23.3

"O" STREET PUMPING PLANT
PUMP PLANT
EQUIPMENT LIFTING SYSTEM 2

SHEET M-6

DISREGARD PRINTS BEARING EARLIER REVISION DATES → 11-01-13 11-15-13 12-06-13 12-16-13 1-13-14
REVISION DATES (PRELIMINARY STAGE ONLY) SHEET OF

C:\expedite\03120000581_o_street_pump_house_rehab\m_06.dgn
12-JUN-2014 10:34

Dist	COUNTY	ROUTE	POST MILES TOTAL PROJECT	SHEET No.	TOTAL SHEETS
03	Sac	5	23.3	35	57

Michael R. White 4/1/2014
REGISTERED MECHANICAL ENGINEER DATE

6-9-14
PLANS APPROVAL DATE

REGISTERED PROFESSIONAL ENGINEER Michael R. White No. 29108 Exp. 06-30-14 MECH STATE OF CALIFORNIA

The State of California or its officers or agents shall not be responsible for the accuracy or completeness of scanned copies of this plan sheet.

CALIFORNIA STATE FIRE MARSHAL APPROVED FIRE AND PANIC ONLY
Approval of this plan does not authorize or approve any omission or deviation from applicable regulations. Final approval is subject to field inspection. One set of approved plans shall be available on the project site at all times.
Reviewed by: FRANCIS SOLICH
Approval date: 02-05-14

FAN EQUIPMENT SCHEDULE
500-600 cfm, 120 VAC, Single-Phase

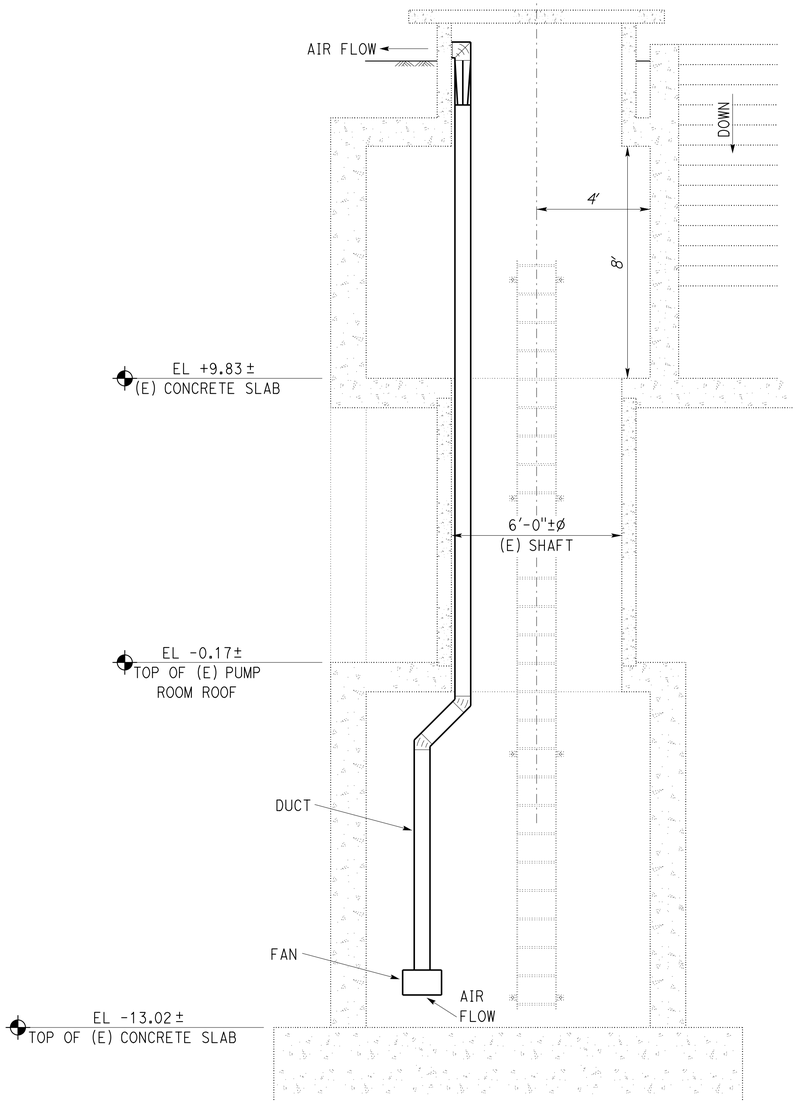

1 EXISTING PUMPING PLANT VENTILATION SYSTEM
Scale 3/8"= 1' - 0"

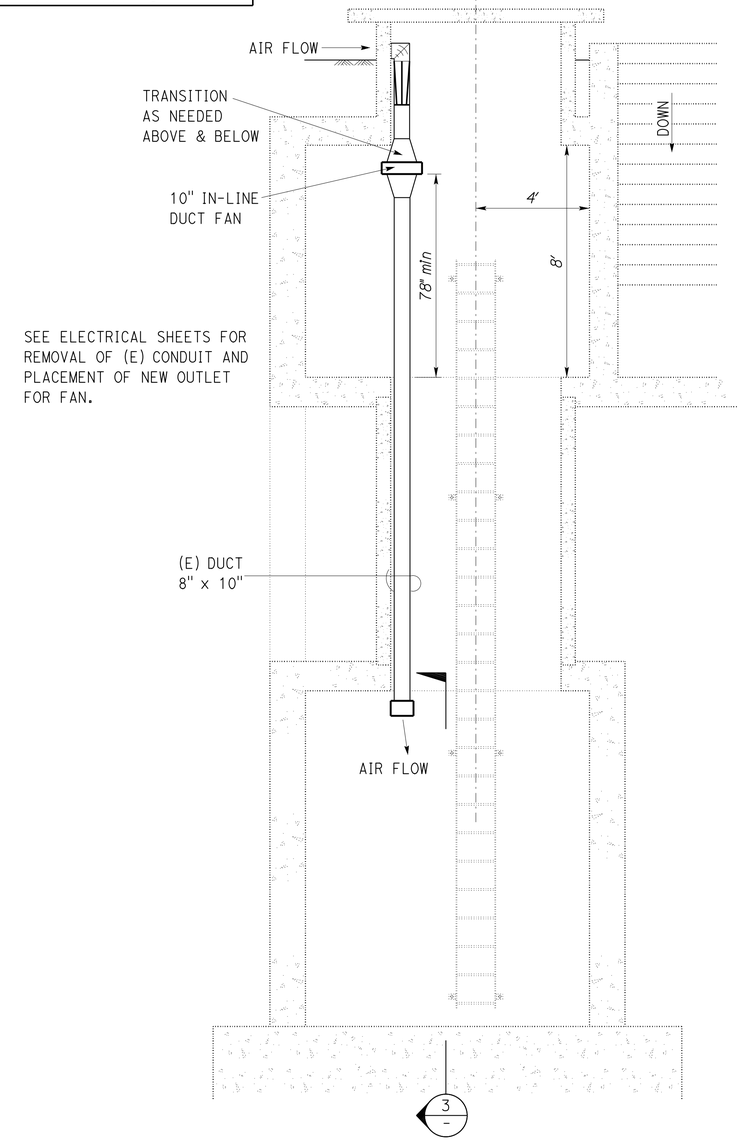

2 NEW PUMPING PLANT VENTILATION SYSTEM
Scale 3/8"= 1' - 0"

Note:

1. Mount the new ventilation fan so that it does not obstruct access to the ladder.

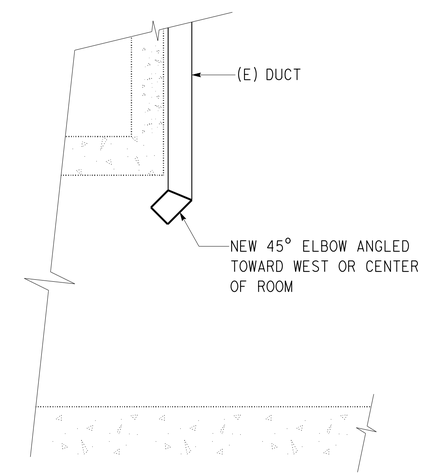

3 SECTION
NO SCALE

Note:
The contractor shall verify all controlling field dimensions before ordering or fabricating any material.

	BY	CHECKED
DESIGN	Michael White	Alan M Torres
DETAILS	Michael White	Alan M Torres
QUANTITIES	Michael White	Alan M Torres

ORIGINAL SCALE IN INCHES FOR REDUCED PLANS 0 1 2 3

STATE OF CALIFORNIA
DEPARTMENT OF TRANSPORTATION

DIVISION OF ENGINEERING SERVICES
ELECTRICAL-MECHANICAL-WATER AND WASTEWATER DESIGN

UNIT: 3618 CONTRACT No.: 3F0401
PROJECT NUMBER & PHASE: 03120000581

BRIDGE NO. 24-0273W
POST MILE 23.3

"O" STREET PUMPING PLANT
PUMP PLANT | NEW VENTILATION SYSTEM

SHEET M-7

DISREGARD PRINTS BEARING EARLIER REVISION DATES → 11-06-13 11-15-13 12-06-13 12-16-13 1-13-14
REVISION DATES (PRELIMINARY STAGE ONLY) SHEET OF

10-JUN-2014 06:29
C:\expedite\03120000581_o_street_pump_house_rehab\m_07.dgn

Dist	COUNTY	ROUTE	POST MILES TOTAL PROJECT	SHEET No.	TOTAL SHEETS
03	Sac	5	23.3	36	57

CALIFORNIA STATE FIRE MARSHAL
APPROVED FIRE AND PANIC ONLY
Approval of this plan does not authorize or approve any omission or deviation from applicable regulations. Final approval is subject to field inspection. One set of approved plans shall be available on the project site at all times.
Reviewed by: FRANCIS SOLICH
Approval date: 02-05-14

Michael R. White 4/1/2014
REGISTERED MECHANICAL ENGINEER DATE

6-9-14
PLANS APPROVAL DATE

REGISTERED PROFESSIONAL ENGINEER Michael R. White No. 29108 Exp. 06-30-14 MECH STATE OF CALIFORNIA

The State of California or its officers or agents shall not be responsible for the accuracy or completeness of scanned copies of this plan sheet.

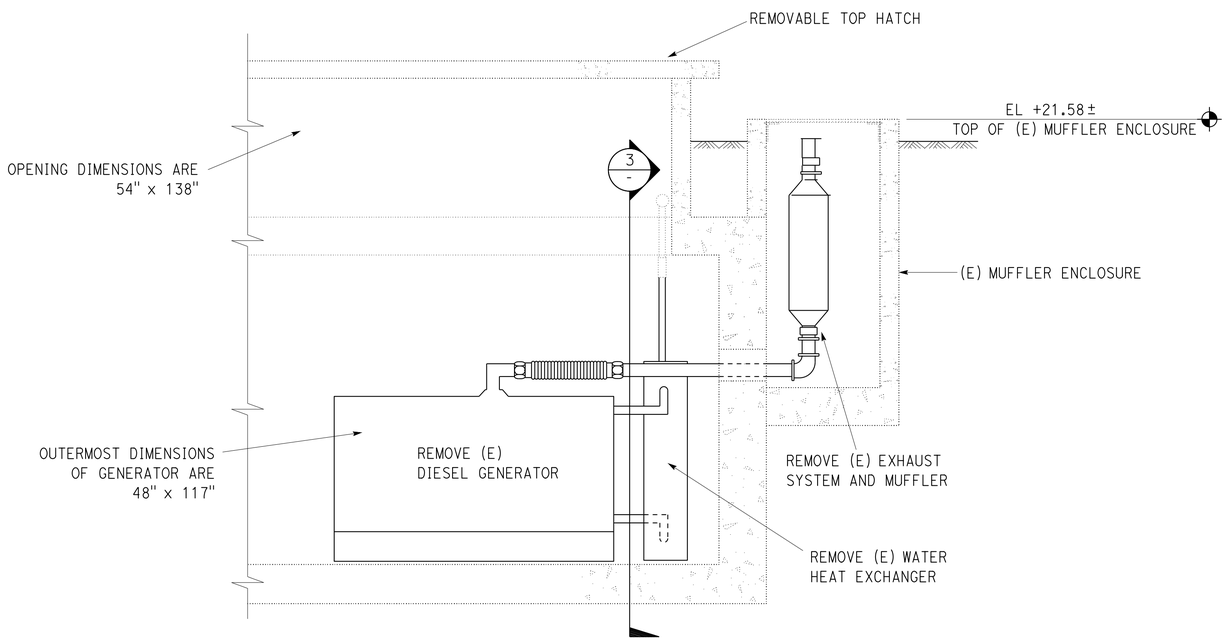

1 GENERATOR EQUIPMENT REMOVAL
SCALE ½"= 1' - 0"

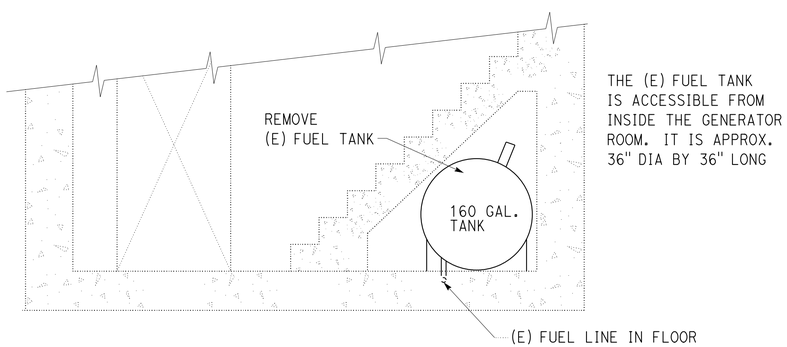

2 FUEL SYSTEM REMOVAL
SCALE ½"= 1' - 0"

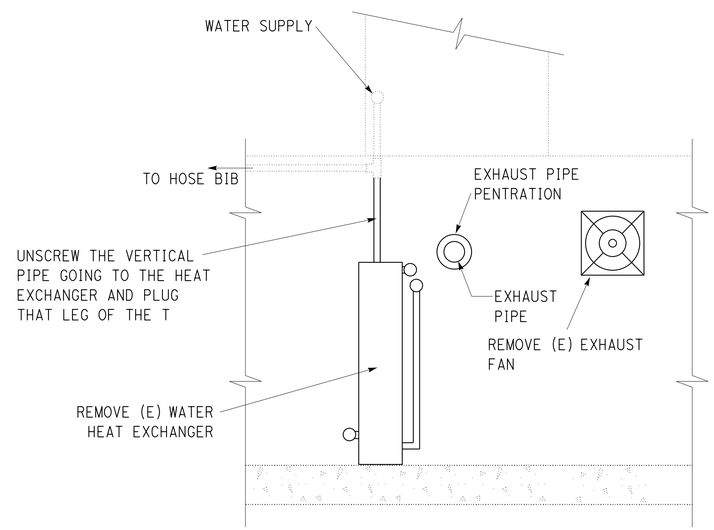

3 REMOVAL OF OTHER EQUIPMENT
SCALE ½"= 1' - 0"

Notes:

1. Remove existing generator and associated equipment. Thoroughly clean oil and grease from the floor. See electrical sheets for conduit removal.
2. Cut existing fuel line(s) flush with floor, fill with grout, and smooth to existing floor finish.
3. Remove existing water supply to heat exchanger but leave hose bib connection.
4. Remove existing heat exchanger including piping and anchor bolts.
5. Salvage existing room exhaust fan.
6. The three removable top hatches are merely 4" thick concrete slabs with cast-in-place bars in pockets for attaching hooks or shackles for lifting.

Note:
The contractor shall verify all controlling field dimensions before ordering or fabricating any material.

	BY	CHECKED
DESIGN	Michael White	Alan M Torres
DETAILS	Michael White	Alan M Torres
QUANTITIES	Michael White	Alan M Torres

ORIGINAL SCALE IN INCHES FOR REDUCED PLANS 0 1 2 3

STATE OF CALIFORNIA
DEPARTMENT OF TRANSPORTATION

DIVISION OF ENGINEERING SERVICES
ELECTRICAL-MECHANICAL-WATER AND WASTEWATER DESIGN

UNIT: 3618 CONTRACT No.: 3F0401
PROJECT NUMBER & PHASE: 03120000581

BRIDGE NO. 24-0273W
POST MILE 23.3

"O" STREET PUMPING PLANT
PUMP PLANT | EXISTING GENERATOR REMOVAL

SHEET M-8

DISREGARD PRINTS BEARING EARLIER REVISION DATES → 11-01-13 11-15-13 12-06-13 12-16-13 1-13-14
REVISION DATES (PRELIMINARY STAGE ONLY) SHEET OF

10-JUN-2014 06:29
C:\expedite\03120000581_o_street_pump_house_rehab\m_08.dgn

Dist	COUNTY	ROUTE	POST MILES TOTAL PROJECT	SHEET No.	TOTAL SHEETS
03	Sac	5	23.3	37	57

Michael R. White 4/1/2014
REGISTERED MECHANICAL ENGINEER DATE

6-9-14
PLANS APPROVAL DATE

REGISTERED PROFESSIONAL ENGINEER Michael R. White No. 29108 Exp. 06-30-14 MECH STATE OF CALIFORNIA

The State of California or its officers or agents shall not be responsible for the accuracy or completeness of scanned copies of this plan sheet.

CALIFORNIA STATE FIRE MARSHAL APPROVED FIRE AND PANIC ONLY
Approval of this plan does not authorize or approve any omission or deviation from applicable regulations. Final approval is subject to field inspection. One set of approved plans shall be available on the project site at all times.
Reviewed by: FRANCIS SOLICH
Approval date: 02-05-14

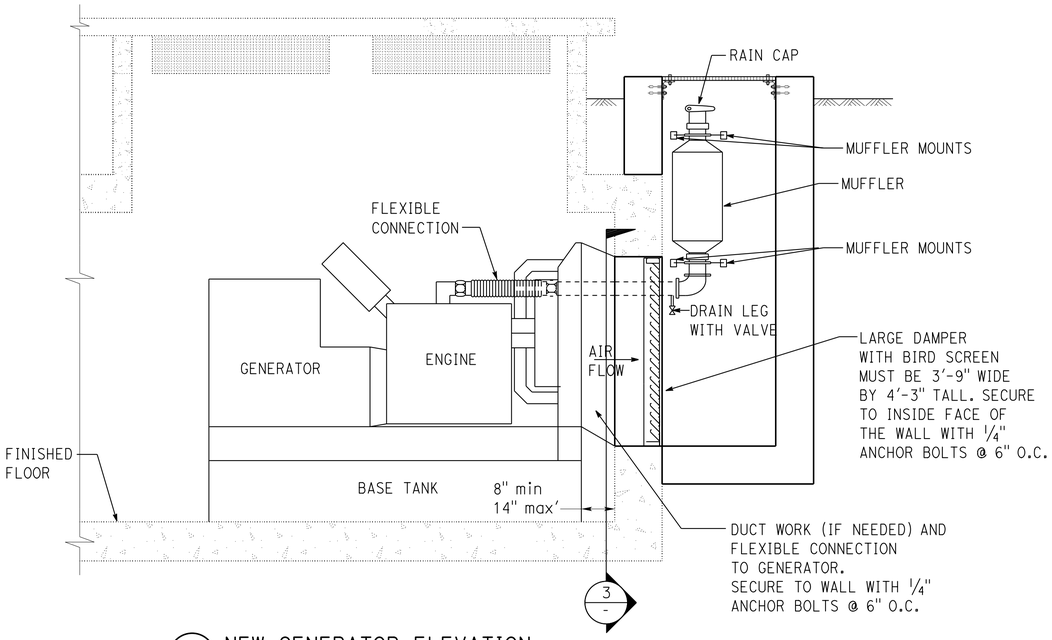

1 NEW GENERATOR ELEVATION
SCALE 1/2"= 1' - 0"

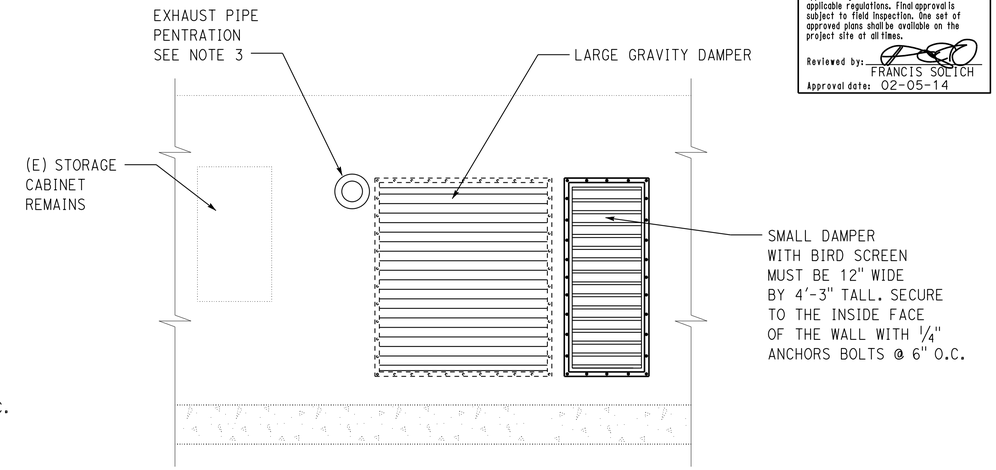

3 SECTION VIEW
SCALE 1/2"= 1' - 0"

Notes:

1. Use 1/4" sheet metal screws @ 4" O.C. to connect exhaust shroud to fire damper shroud. Seal air tight.
2. Generator must be secured to the concrete floor using vibration isolators.
3. The size and location of the exhaust pipe penetration hole through the concrete wall will depend on the selection of the generator make and model.
4. Install Fire Extinguisher such that the handle is at 3' 6" above floor and the unit is within 15" from the door opening.

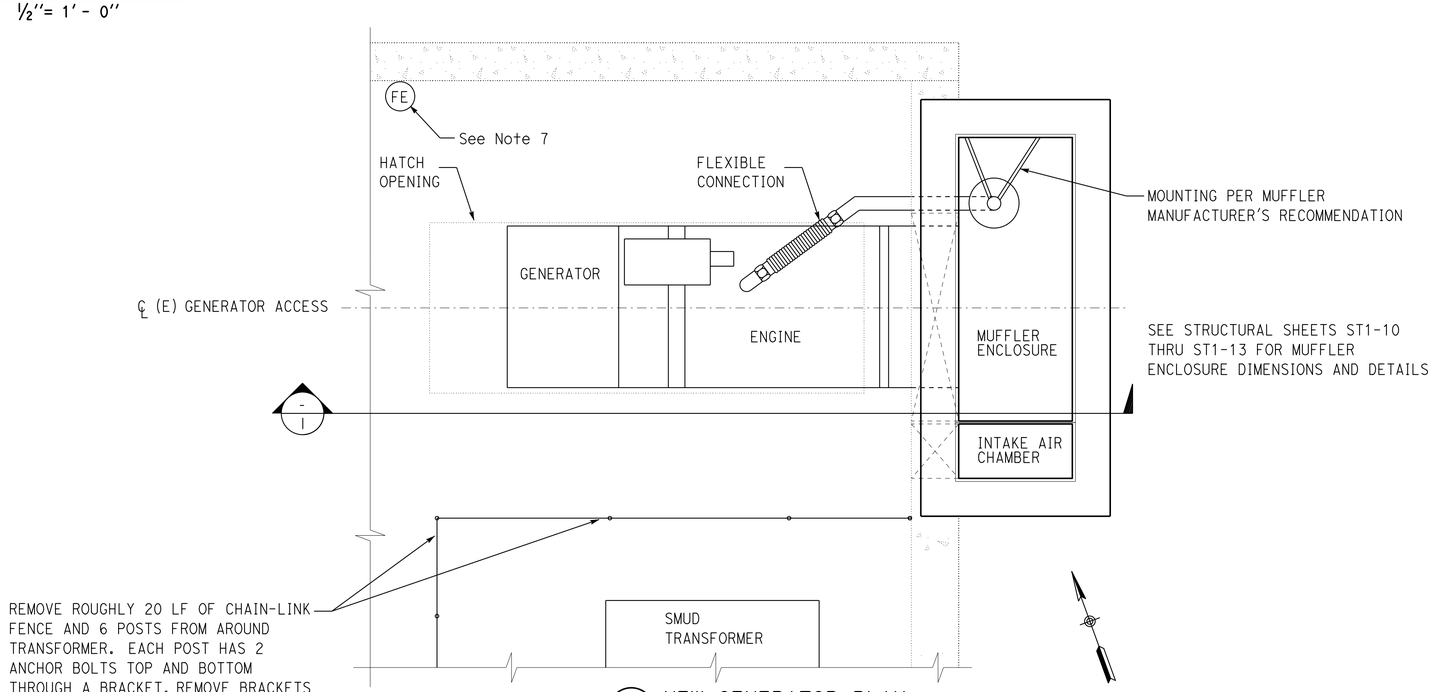

2 NEW GENERATOR PLAN
SCALE 1/2"= 1' - 0"

Note:
The contractor shall verify all controlling field dimensions before ordering or fabricating any material.

	BY	CHECKED
DESIGN	Michael White	Alan M Torres
DETAILS	Michael White	Alan M Torres
QUANTITIES	Michael White	Alan M Torres

ORIGINAL SCALE IN INCHES FOR REDUCED PLANS 0 1 2 3

STATE OF CALIFORNIA
DEPARTMENT OF TRANSPORTATION

DIVISION OF ENGINEERING SERVICES
ELECTRICAL-MECHANICAL-WATER AND WASTEWATER DESIGN

UNIT: 3618 CONTRACT No.: 3F0401
PROJECT NUMBER & PHASE: 03120000581

BRIDGE NO. 24-0273W
POST MILE 23.3

"O" STREET PUMPING PLANT
PUMP PLANT
NEW GENERATOR INSTALLATION

SHEET M-9

DISREGARD PRINTS BEARING EARLIER REVISION DATES
REVISION DATES (PRELIMINARY STAGE ONLY) 11-01-13 11-15-13 12-06-13 12-16-13 1-13-14
SHEET OF

12-JUN-2014 10:34
C:\expedite\03120000581_o_street_pump_house_rehab\m_09.dgn

Dist	COUNTY	ROUTE	POST MILES TOTAL PROJECT	SHEET No.	TOTAL SHEETS
03	Sac	5	23.3	38	57

Michael R. White 4/1/2014
REGISTERED MECHANICAL ENGINEER DATE

6-9-14
PLANS APPROVAL DATE

REGISTERED PROFESSIONAL ENGINEER
Michael R. White
No. 29108
Exp. 06-30-14
MECH
STATE OF CALIFORNIA

The State of California or its officers or agents shall not be responsible for the accuracy or completeness of scanned copies of this plan sheet.

CALIFORNIA STATE FIRE MARSHAL
APPROVED FIRE AND PANIC ONLY
Approval of this plan does not authorize or approve any omission or deviation from applicable regulations. Final approval is subject to field inspection. One set of approved plans shall be available on the project site at all times.
Reviewed by: FRANCIS SOLICH
Approval date: 02-05-14

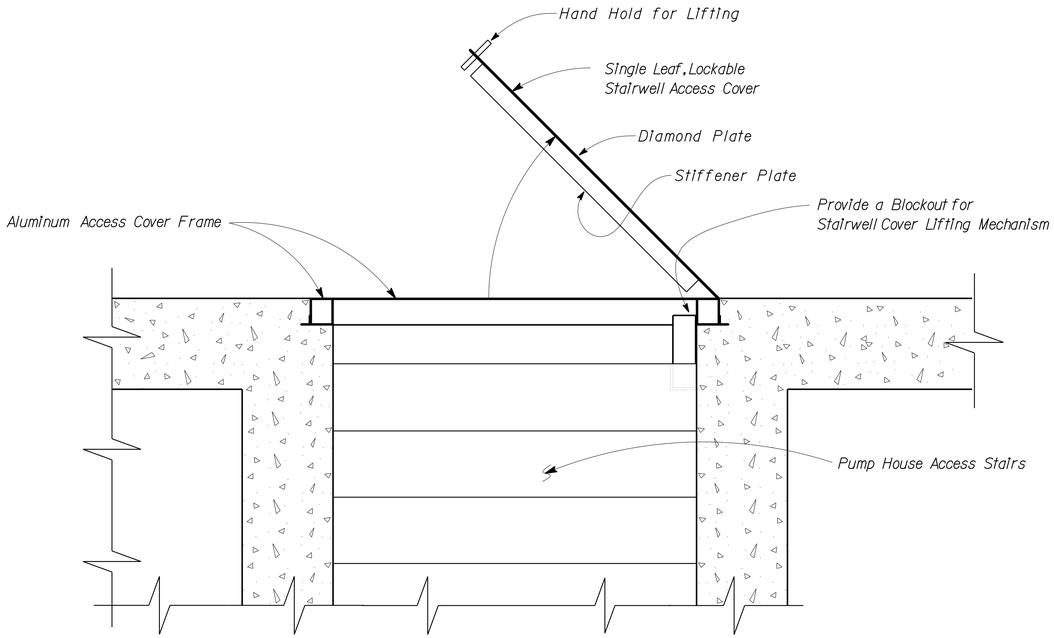

1 STAIRWELL ACCESS COVER SECTION
NO SCALE

Note:

1. See Structural Sheets ST1-8 and ST1-9 for stairwell access cover location.

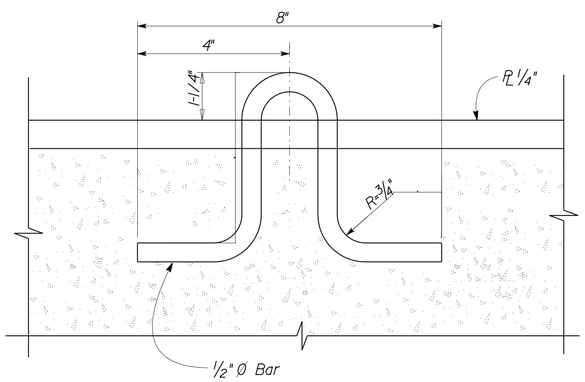

2 LOCK LOOP SECTION
NO SCALE

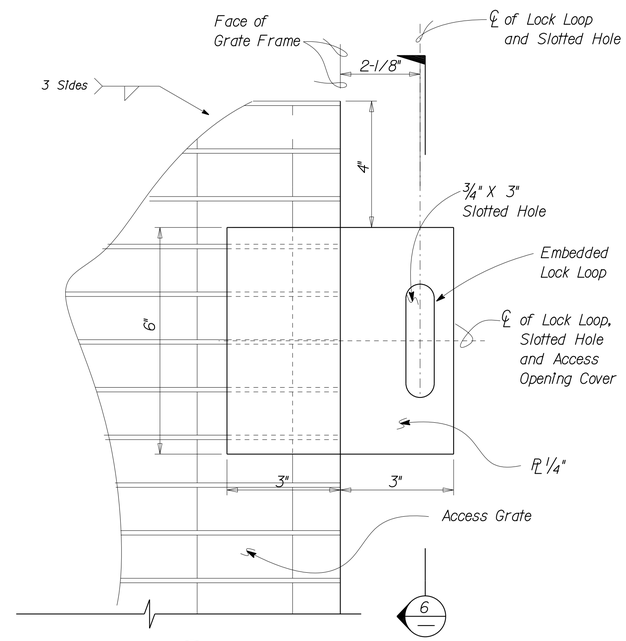

3 LOCK LOOP PLAN
NO SCALE

Note:
The contractor shall verify all controlling field dimensions before ordering or fabricating any material.

	BY	CHECKED
DESIGN	Michael White	Alan M Torres
DETAILS	Michael White	Alan M Torres
QUANTITIES	Michael White	Alan M Torres

ORIGINAL SCALE IN INCHES FOR REDUCED PLANS 0 1 2 3

STATE OF CALIFORNIA
DEPARTMENT OF TRANSPORTATION

DIVISION OF ENGINEERING SERVICES
ELECTRICAL-MECHANICAL-WATER AND WASTEWATER DESIGN

UNIT: 3618 CONTRACT No.: 3F0401
PROJECT NUMBER & PHASE: 03120000581

BRIDGE NO. 24-0273W
POST MILE 23.3

"O" STREET PUMPING PLANT
PUMP PLANT | STAIRWELL ACCESS COVER LOCK DETAILS

SHEET M-10

DISREGARD PRINTS BEARING EARLIER REVISION DATES →
REVISION DATES (PRELIMINARY STAGE ONLY): 11-01-13 | 11-15-13 | 12-06-13 | 12-16-13 | 1-13-14
SHEET OF

10-JUN-2014 08:05
C:\expedite\03120000581_o_street_pump_house_rehab\m_10.dgn

Dist	COUNTY	ROUTE	POST MILES TOTAL PROJECT	SHEET No.	TOTAL SHEETS
03	Sac	5	23.3	39	57

Michael R. White 4/1/2014
REGISTERED MECHANICAL ENGINEER DATE

6-9-14
PLANS APPROVAL DATE

REGISTERED PROFESSIONAL ENGINEER Michael R. White No. 29108 Exp. 06-30-14 MECH STATE OF CALIFORNIA

The State of California or its officers or agents shall not be responsible for the accuracy or completeness of scanned copies of this plan sheet.

CALIFORNIA STATE FIRE MARSHAL APPROVED FIRE AND PANIC ONLY
Approval of this plan does not authorize or approve any omission or deviation from applicable regulations. Final approval is subject to field inspection. One set of approved plans shall be available on the project site at all times.
Reviewed by: FRANCIS SOLICH
Approval date: 02-05-14

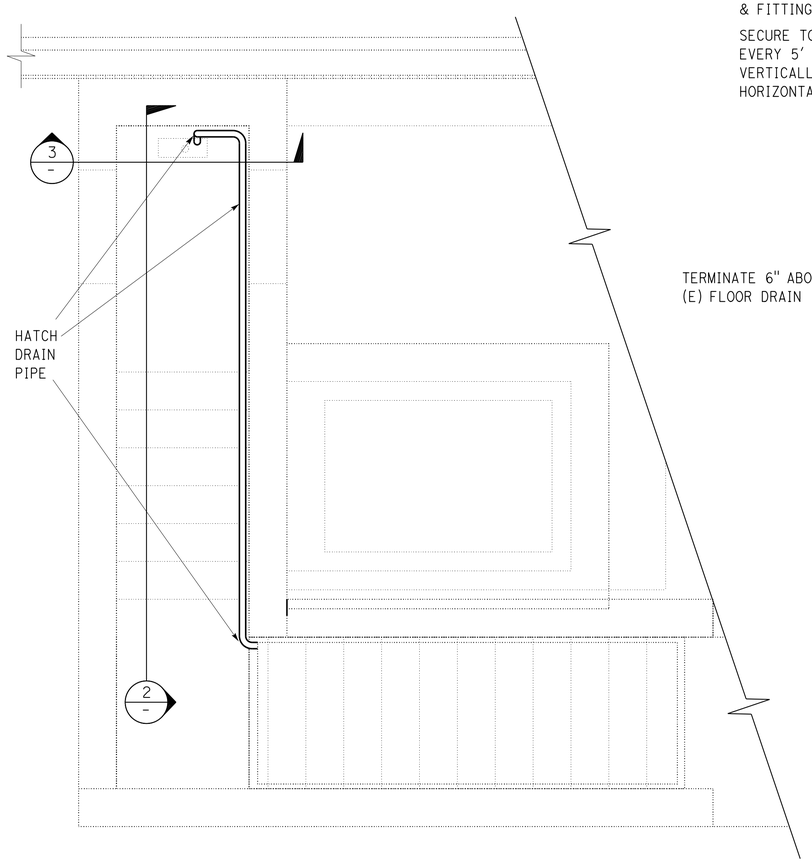

1 STAIRWELL HATCH DRAIN PLAN
SCALE ½"= 1'- 0"

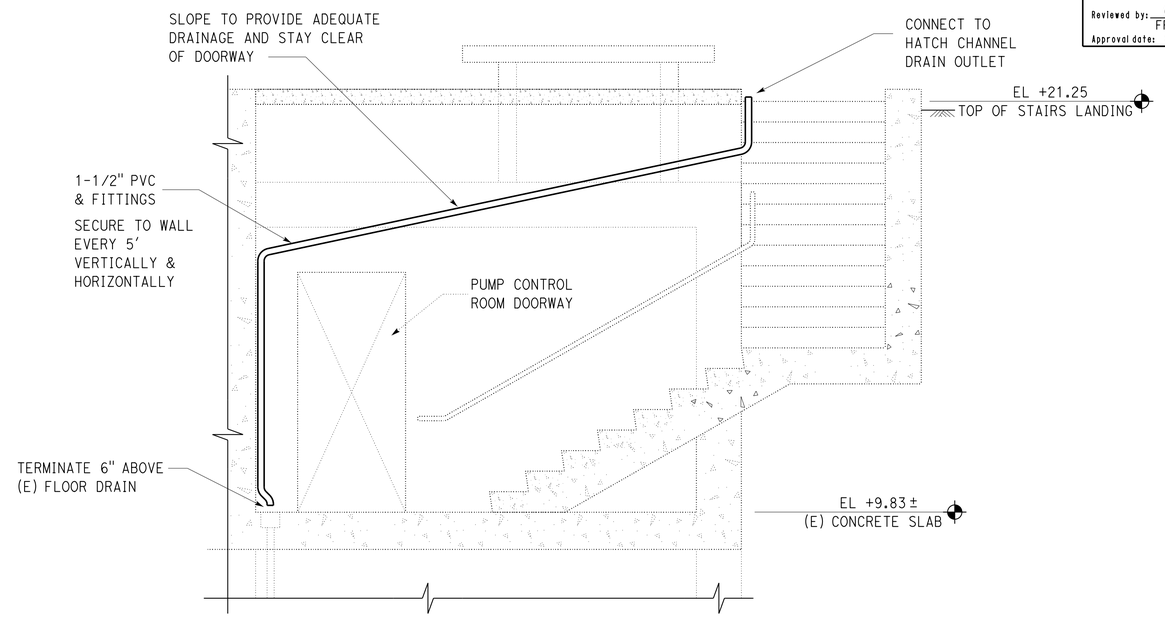

2 STAIRWELL ACCESS DRAIN SECTION
SCALE ½"= 1'- 0"

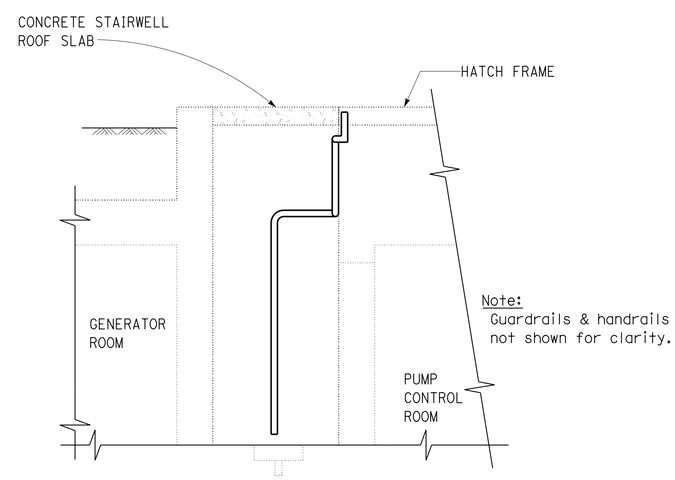

Note:
Guardrails & handrails not shown for clarity.

3 STAIRWELL ACCESS DRAIN SECTION
SCALE ½"= 1'- 0"

Notes

1. See Structural Sheets ST1-8 and ST1-9 for hatch location.

Note:
The contractor shall verify all controlling field dimensions before ordering or fabricating any material.

	BY	CHECKED
DESIGN	Michael White	Alan M Torres
DETAILS	Michael White	Alan M Torres
QUANTITIES	Michael White	Alan M Torres

ORIGINAL SCALE IN INCHES FOR REDUCED PLANS 0 1 2 3

STATE OF CALIFORNIA
DEPARTMENT OF TRANSPORTATION

DIVISION OF ENGINEERING SERVICES
ELECTRICAL-MECHANICAL-WATER AND WASTEWATER DESIGN

UNIT: 3618 CONTRACT No.: 3F0401
PROJECT NUMBER & PHASE: 03120000581

BRIDGE NO. 24-0273W
POST MILE 23.3

"O" STREET PUMPING PLANT

PUMP PLANT | STAIRWELL ACCESS COVER DRAIN DETAILS

SHEET M-11

DISREGARD PRINTS BEARING EARLIER REVISION DATES →
REVISION DATES (PRELIMINARY STAGE ONLY) 11-01-13 11-15-13 12-06-13 12-16-13 1-13-14
SHEET OF

C:\expedite\03120000581_o_street_pump_house_rehab\m_11.dgn
10-JUN-2014 06:27

Dist	COUNTY	ROUTE	POST MILES TOTAL PROJECT	SHEET No.	TOTAL SHEETS
03	Sac	5	23.3	40	57

Michael R. White 4/1/2014
REGISTERED MECHANICAL ENGINEER DATE

6-9-14
PLANS APPROVAL DATE

REGISTERED PROFESSIONAL ENGINEER Michael R. White No. 29108 Exp. 06-30-14 MECH STATE OF CALIFORNIA

The State of California or its officers or agents shall not be responsible for the accuracy or completeness of scanned copies of this plan sheet.

CALIFORNIA STATE FIRE MARSHAL APPROVED FIRE AND PANIC ONLY
Approval of this plan does not authorize or approve any omission or deviation from applicable regulations. Final approval is subject to field inspection. One set of approved plans shall be available on the project site at all times.
Reviewed by: FRANCIS SOLICH
Approval date: 02-05-14

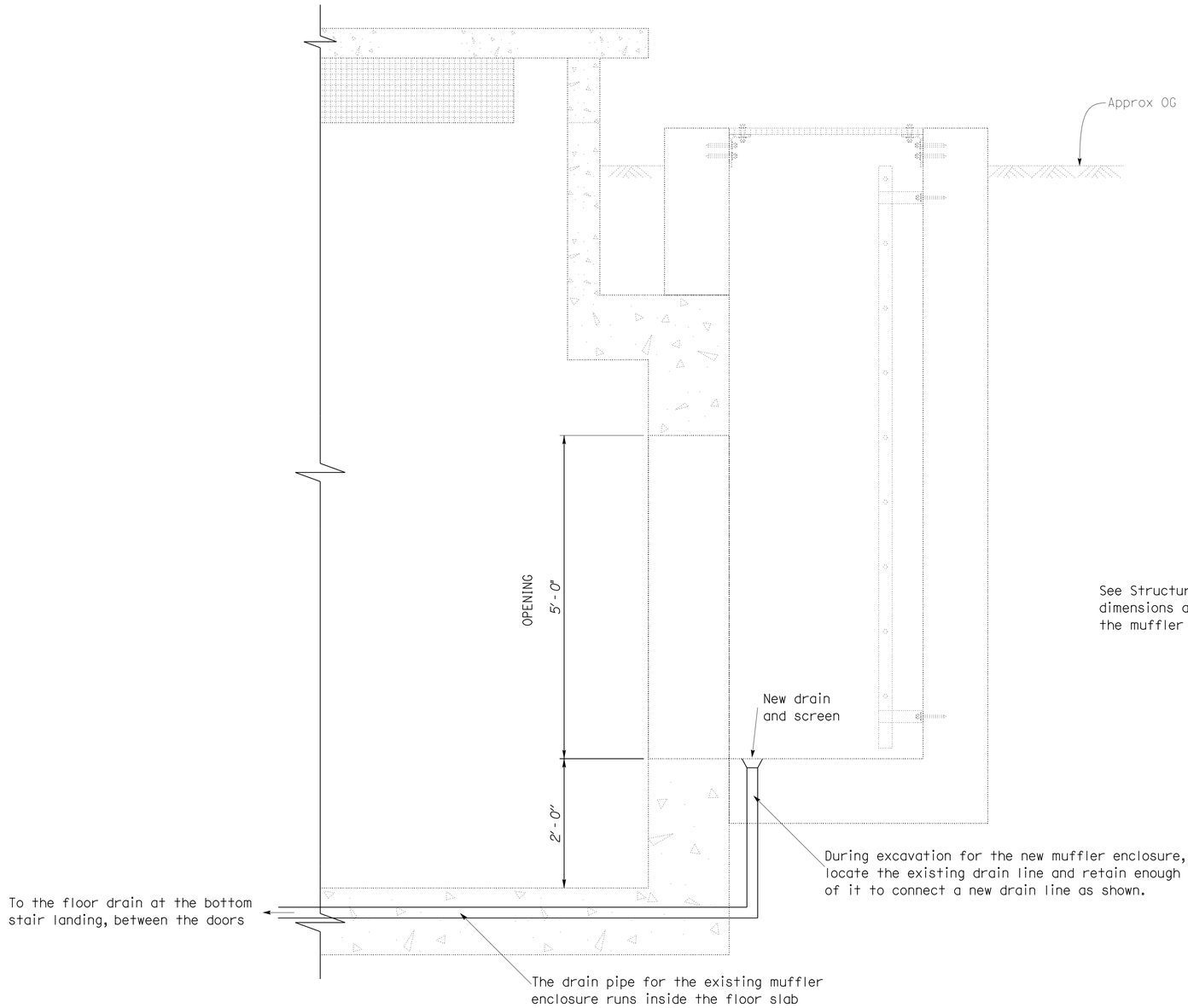

See Structural sheets for the dimensions and elevations of the muffler enclosure

Notes:

1. The new muffler enclosure drain pipe must match the existing drain pipe material.
2. Drain screen must be removable for cleaning.
3. The new drain screen must be flush with the low point of the floor. The muffler enclosure floor must slope toward the drain.

1 MUFFLER ENCLOSURE DRAIN
SCALE 1 "= 1'- 0"

Note:
The contractor shall verify all controlling field dimensions before ordering or fabricating any material.

	BY	CHECKED
DESIGN	Michael White	Alan M Torres
DETAILS	Michael White	Alan M Torres
QUANTITIES	Michael White	Alan M Torres

ORIGINAL SCALE IN INCHES FOR REDUCED PLANS 0 1 2 3

STATE OF CALIFORNIA
DEPARTMENT OF TRANSPORTATION

DIVISION OF ENGINEERING SERVICES
ELECTRICAL-MECHANICAL-WATER AND WASTEWATER DESIGN

UNIT: 3618 CONTRACT No.: 3F0401
PROJECT NUMBER & PHASE: 03120000581

BRIDGE NO. 24-0273W
POST MILE 23.3

"O" STREET PUMPING PLANT
PUMP PLANT
MUFFLER ENCLOSURE DRAIN

SHEET M-12

DISREGARD PRINTS BEARING EARLIER REVISION DATES
REVISION DATES (PRELIMINARY STAGE ONLY) 11-06-13 11-15-13 12-06-13 12-16-13 1-13-14
SHEET OF

10-JUN-2014 06:27
C:\expedite\03120000581_o_street_pump_house_rehab\m_12.dgn

Dist	COUNTY	ROUTE	POST MILES TOTAL PROJECT	SHEET No.	TOTAL SHEETS
03	Sac	5	23.3	41	57

Michael R. White 4/1/2014
REGISTERED MECHANICAL ENGINEER DATE

6-9-14
PLANS APPROVAL DATE

REGISTERED PROFESSIONAL ENGINEER Michael R. White No. 29108 Exp. 06-30-14 MECH STATE OF CALIFORNIA

The State of California or its officers or agents shall not be responsible for the accuracy or completeness of scanned copies of this plan sheet.

CALIFORNIA STATE FIRE MARSHAL APPROVED FIRE AND PANIC ONLY
Approval of this plan does not authorize or approve any omission or deviation from applicable regulations. Final approval is subject to field inspection. One set of approved plans shall be available on the project site at all times.
Reviewed by: FRANCIS SOLICH
Approval date: 02-05-14

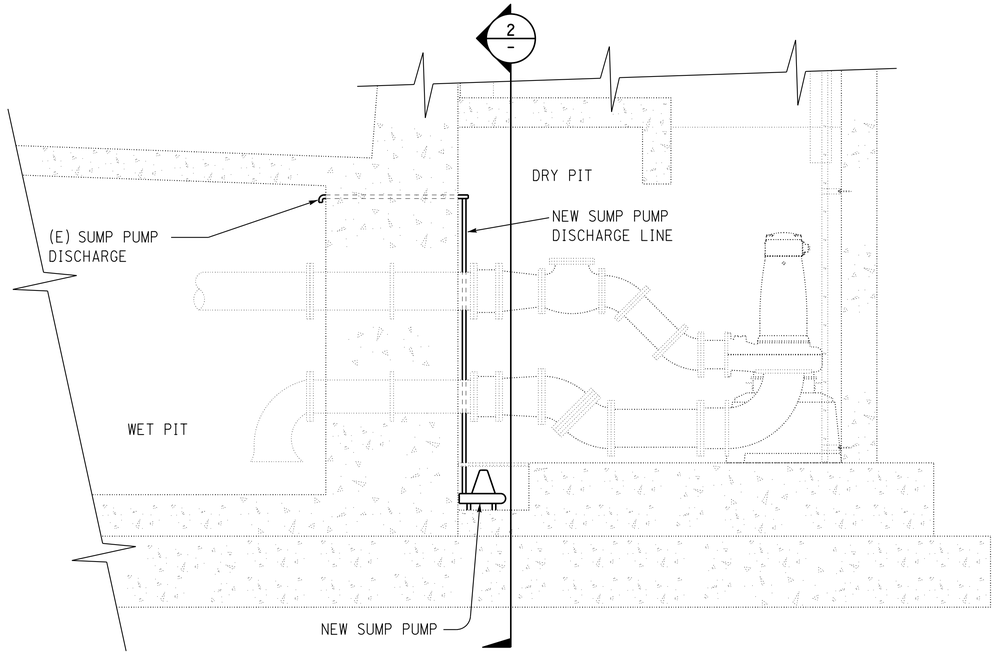

1 DRY PIT SUMP PUMP WORK
SCALE 3/8"= 1' - 0"

SUMP PUMP EQUIPMENT SCHEDULE
1/2 HP MINIMUM, 120 VAC, SINGLE-PHASE 15 GPM AT 20 FT HEAD MINIMUM

Notes:

1. The sump pump piping and fittings must be galvanized steel pipe.

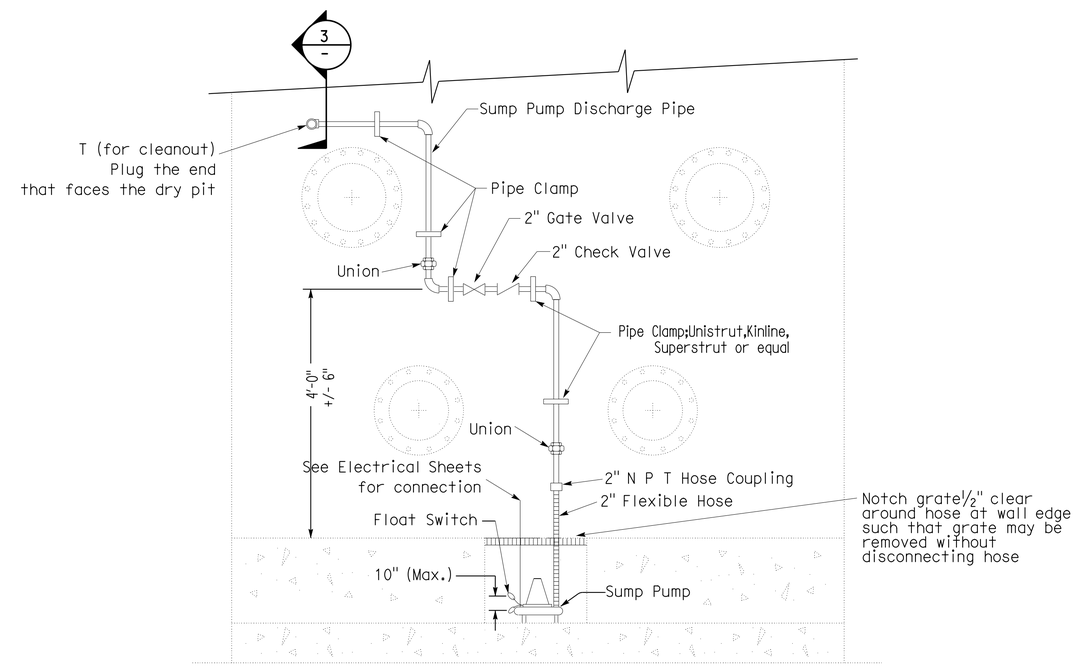

2 SUMP PUMP DISCHARGE PIPING
NO SCALE

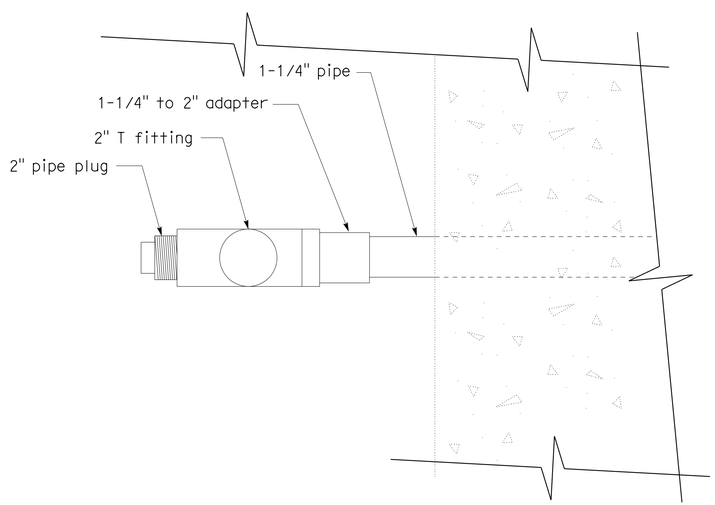

3 SUMP PUMP DISCHARGE PIPING
NO SCALE

Note:
The contractor shall verify all controlling field dimensions before ordering or fabricating any material.

	BY	CHECKED
DESIGN	Michael White	Alan M Torres
DETAILS	Michael White	Alan M Torres
QUANTITIES	Michael White	Alan M Torres

ORIGINAL SCALE IN INCHES FOR REDUCED PLANS 0 1 2 3

STATE OF CALIFORNIA
DEPARTMENT OF TRANSPORTATION

DIVISION OF ENGINEERING SERVICES
ELECTRICAL-MECHANICAL-WATER AND WASTEWATER DESIGN

UNIT: 3618 CONTRACT No.: 3F0401
PROJECT NUMBER & PHASE: 03120000581

BRIDGE NO. 24-0273W
POST MILE 23.3

"O" STREET PUMPING PLANT
PUMP PLANT | DRY PIT SUMP PUMP

SHEET M-13

DISREGARD PRINTS BEARING EARLIER REVISION DATES → 11-01-13 | 11-15-13 | 12-06-13 | 12-16-13 | 1-13-14
REVISION DATES (PRELIMINARY STAGE ONLY) SHEET OF

10-JUN-2014 06:27
C:\expedite\03120000581_o_street_pump_house_rehab\m_13.dgn

Dist	COUNTY	ROUTE	POST MILES TOTAL PROJECT	SHEET No.	TOTAL SHEETS
03	Sac	5	23.3	42	57

CALIFORNIA STATE FIRE MARSHAL APPROVED FIRE AND PANIC ONLY
Approval of this plan does not authorize or approve any omission or deviation from applicable regulations. Final approval is subject to field inspection. One set of approved plans shall be available on the project site at all times.
Reviewed by: FRANCIS SOLICH
Approval date: 02-05-14

Michael R. White 4/1/2014
REGISTERED MECHANICAL ENGINEER DATE

6-9-14
PLANS APPROVAL DATE

REGISTERED PROFESSIONAL ENGINEER Michael R. White No. 29108 Exp. 06-30-14 MECH STATE OF CALIFORNIA

The State of California or its officers or agents shall not be responsible for the accuracy or completeness of scanned copies of this plan sheet.

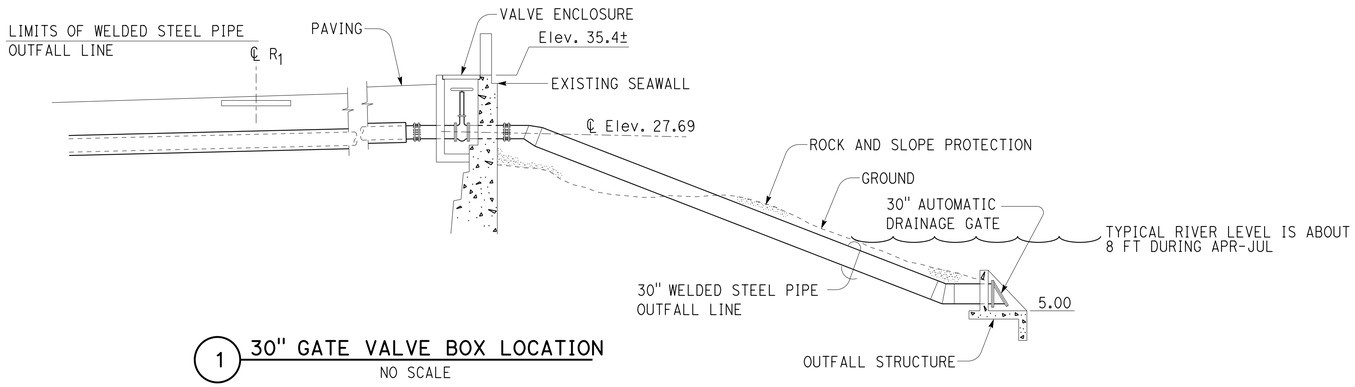

1 30" GATE VALVE BOX LOCATION
NO SCALE

Notes:

1. Remove the existing 30" gate valve from the existing discharge line.
2. Remove the existing vacuum breaker assembly and connecting minor pipes.
3. Install new 30" gate valve using new gaskets.
4. Install new vacuum breaker assembly using new galvanized pipe to make any needed connections.

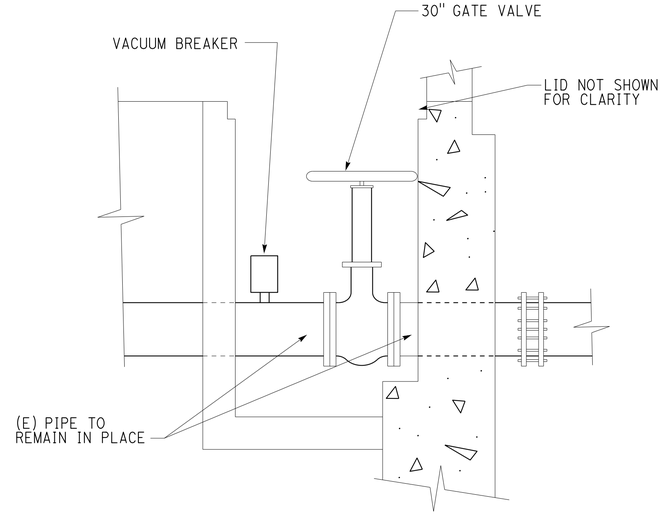

2 DISCHARGE LINE WORK
NO SCALE

Note:
The contractor shall verify all controlling field dimensions before ordering or fabricating any material.

	BY	CHECKED
DESIGN	Michael White	Alan M Torres
DETAILS	Michael White	Alan M Torres
QUANTITIES	Michael White	Alan M Torres

ORIGINAL SCALE IN INCHES FOR REDUCED PLANS 0 1 2 3

STATE OF CALIFORNIA
DEPARTMENT OF TRANSPORTATION

DIVISION OF ENGINEERING SERVICES
ELECTRICAL-MECHANICAL-WATER AND WASTEWATER DESIGN

UNIT: 3618 CONTRACT No.: 3F0401
PROJECT NUMBER & PHASE: 03120000581

BRIDGE NO. 24-0273W
POST MILE 23.3

"O" STREET PUMPING PLANT
PUMP PLANT | DISCHARGE GATE VALVE AREA

SHEET M-14

DISREGARD PRINTS BEARING EARLIER REVISION DATES → REVISION DATES (PRELIMINARY STAGE ONLY) 11-06-13 11-15-13 12-06-13 12-16-13 1-13-14 SHEET OF

10-JUN-2014 06:50
C:\expedite\03120000581_o_street_pump_house_rehab\m_14.dgn

Dist	COUNTY	ROUTE	POST MILES TOTAL PROJECT	SHEET No.	TOTAL SHEETS
03	Sac	5	23.3	43	57

CALIFORNIA STATE FIRE MARSHAL APPROVED FIRE AND PANIC ONLY
Approval of this plan does not authorize or approve any omission or deviation from applicable regulations. Final approval is subject to field inspection. One set of approved plans shall be available on the project site at all times.
Reviewed by: FRANCIS SOLICH
Approval date: 02-05-14

Michael R. White 4/1/2014
REGISTERED MECHANICAL ENGINEER DATE

6-9-14
PLANS APPROVAL DATE

The State of California or its officers or agents shall not be responsible for the accuracy or completeness of scanned copies of this plan sheet.

REGISTERED PROFESSIONAL ENGINEER Michael R. White No. 29108 Exp. 06-30-14 MECH STATE OF CALIFORNIA

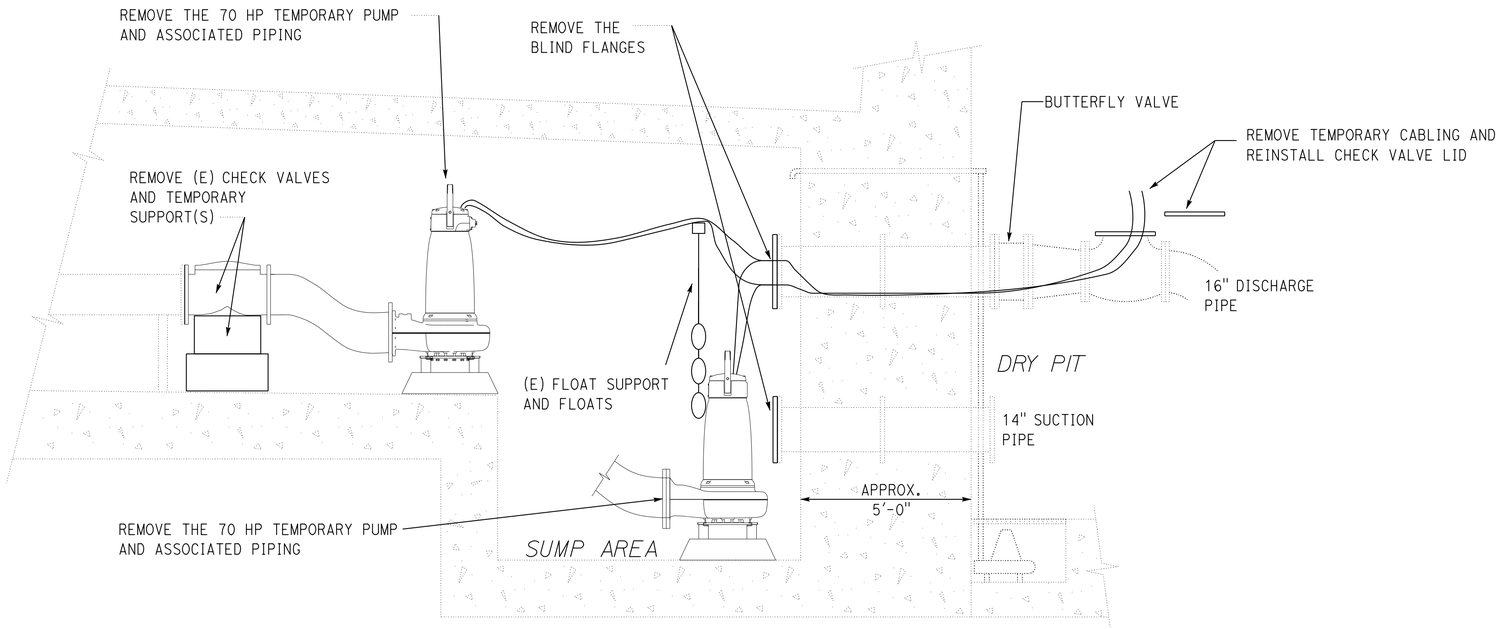

1 REMOVAL OF THE TEMPORARY PUMPS
NO SCALE

Notes:

1. Remove the temporary pumps and associated piping.
2. Remove the existing discharge check valves.
3. Remove the temporary blind flanges.
4. Install new discharge piping from the flange of the penetrating pipes to the flange of the existing discharge pipes.
5. Install new pipe supports to match the existing.
6. Install new long radius suction elbows.

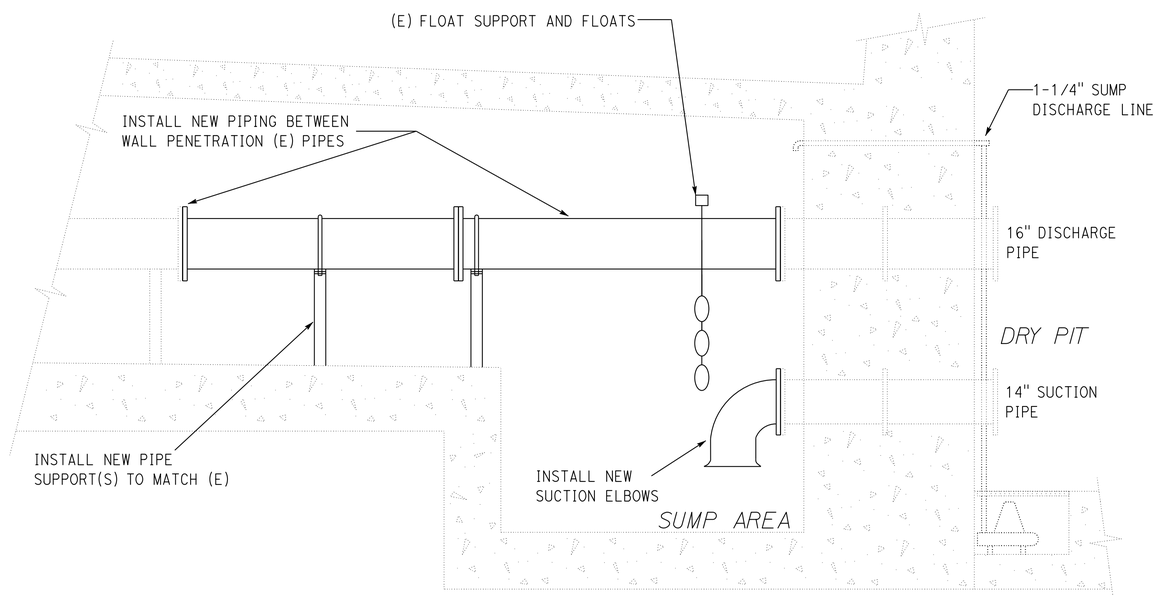

2 NEW PIPE INSTALLATION IN THE WET PIT
NO SCALE

Note:
The contractor shall verify all controlling field dimensions before ordering or fabricating any material.

	BY	CHECKED
DESIGN	Michael White	Alan M Torres
DETAILS	Michael White	Alan M Torres
QUANTITIES	Michael White	Alan M Torres

ORIGINAL SCALE IN INCHES FOR REDUCED PLANS 0 1 2 3

STATE OF CALIFORNIA
DEPARTMENT OF TRANSPORTATION

DIVISION OF ENGINEERING SERVICES
ELECTRICAL-MECHANICAL-WATER AND WASTEWATER DESIGN

UNIT: 3618 CONTRACT No.: 3F0401
PROJECT NUMBER & PHASE: 03120000581

BRIDGE NO. 24-0273W
POST MILE 23.3

"O" STREET PUMPING PLANT

PUMP PLANT — TEMPORARY PUMP REMOVAL & NEW PIPING

SHEET M-15

DISREGARD PRINTS BEARING EARLIER REVISION DATES → 11-01-13 11-15-13 12-06-13 12-16-13 1-13-14

REVISION DATES (PRELIMINARY STAGE ONLY) SHEET OF

C:\expedite\03120000581_o_street_pump_house_rehab\m_15.dgn

10-JUN-2014 06:50

Dist	COUNTY	ROUTE	POST MILES TOTAL PROJECT	SHEET No.	TOTAL SHEETS
03	Sac	5	23.3	44	57

CALIFORNIA STATE FIRE MARSHAL APPROVED FIRE AND PANIC ONLY
Approval of this plan does not authorize or approve any omission or deviation from applicable regulations. Final approval is subject to field inspection. One set of approved plans shall be available on the project site at all times.
Reviewed by: FRANCIS SOLICH
Approval date: 02-05-14

Michael R. White 4/1/2014
REGISTERED MECHANICAL ENGINEER DATE

6-9-14
PLANS APPROVAL DATE

REGISTERED PROFESSIONAL ENGINEER Michael R. White No. 29108 Exp. 06-30-14 MECH STATE OF CALIFORNIA

The State of California or its officers or agents shall not be responsible for the accuracy or completeness of scanned copies of this plan sheet.

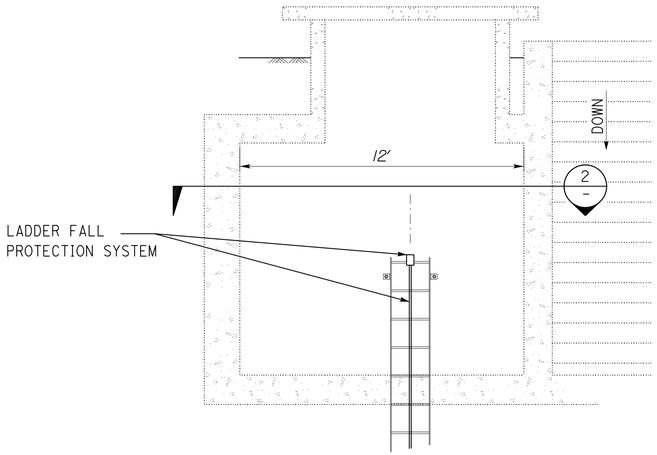

1 FALL PROTECTION LOCATIONS - ELEVATION
NO SCALE

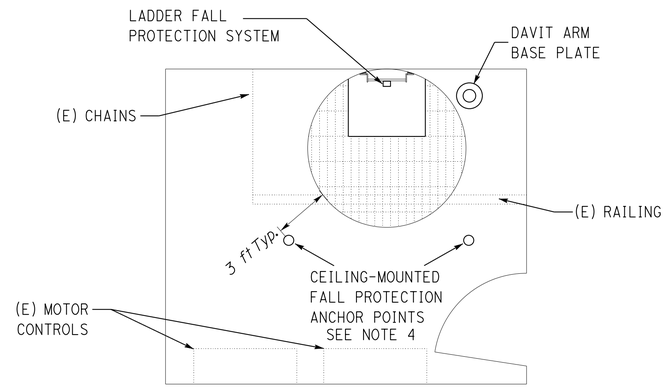

2 FALL PROTECTION LOCATIONS - PLAN
NO SCALE

Notes:

1. Attach ladder fall protection device to top and bottom rungs of ladder.
2. Provide 3 each of the detachable cam-lock fall protection device for use on the ladder fall protection system.
3. Anchors for the fall protection anchor points must be Type 304 or 316 stainless steel.
4. Exact placement of the fall protection anchor points will be determined by the Engineer.
5. Drill an 11/16" hole through the ceiling member for the 5/8" anchor rod. Drill or core the 2" max. depth pocket to house the washer and nut. After tight installation of the anchor assembly, fill the pocket with mortar to seal against corrosion and vandalism.
6. The exact location of the davit arm base will be determined by the Engineer.

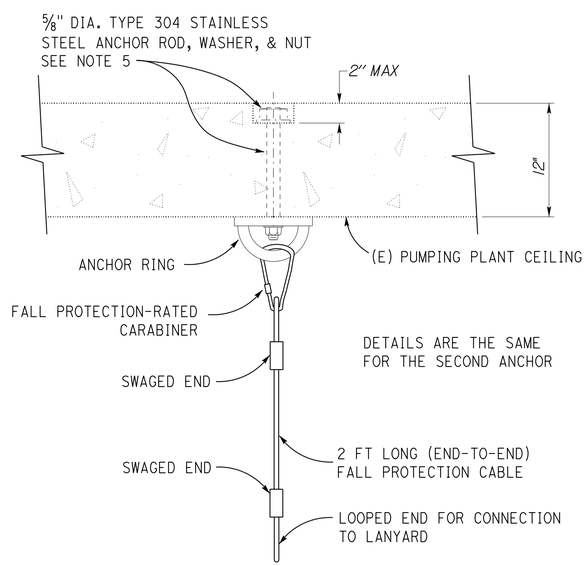

3 FALL PROTECTION ANCHOR DETAILS
NO SCALE

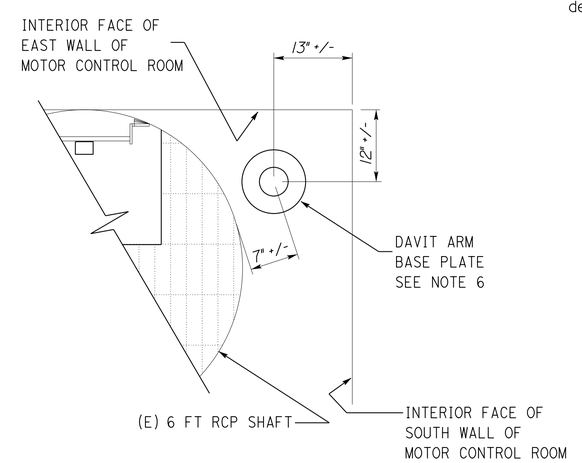

4 DAVIT ARM BASE PLATE LOCATION
NO SCALE

Note:
The contractor shall verify all controlling field dimensions before ordering or fabricating any material.

	BY	CHECKED
DESIGN	Michael White	Alan M Torres
DETAILS	Michael White	Alan M Torres
QUANTITIES	Michael White	Alan M Torres

ORIGINAL SCALE IN INCHES FOR REDUCED PLANS 0 1 2 3

STATE OF CALIFORNIA
DEPARTMENT OF TRANSPORTATION

DIVISION OF ENGINEERING SERVICES
ELECTRICAL-MECHANICAL-WATER AND WASTEWATER DESIGN

UNIT: 3618 CONTRACT No.: 3F0401
PROJECT NUMBER & PHASE: 03120000581

BRIDGE NO. 24-0273W
POST MILE 23.3

DISREGARD PRINTS BEARING EARLIER REVISION DATES →

"O" STREET PUMPING PLANT
PUMP PLANT | FALL PROTECTION SYSTEMS

SHEET M-16

REVISION DATES (PRELIMINARY STAGE ONLY) | SHEET | OF
11-06-13 | 11-15-13 | 12-06-13 | 12-16-13 | 1-13-14 | 3-13-14 | 3-26-14

C:\expedite\03120000581_o_street_pump_house_rehab\m_16.dgn
10-JUN-2014 06:50

Dist	COUNTY	ROUTE	POST MILES TOTAL PROJECT	SHEET No.	TOTAL SHEETS
03	Sac	5	23.3	45	57

REGISTERED ELECTRICAL ENGINEER — DATE 04-01-14

6-9-14
PLANS APPROVAL DATE

REGISTERED PROFESSIONAL ENGINEER — Imran Saeed — No. E18781 — Exp. 06-30-15 — ELEC — STATE OF CALIFORNIA

The State of California or its officers or agents shall not be responsible for the accuracy or completeness of scanned copies of this plan sheet.

CALIFORNIA STATE FIRE MARSHAL APPROVED FIRE AND PANIC ONLY
Approval of this plan does not authorize or approve any omission or deviation from applicable regulations. Final approval is subject to field inspection. One set of approved plans shall be available on the project site at all times.
Reviewed by: FRANCIS SOLICH
Approval date: 02-05-14

GRAPHIC SYMBOLS FOR ELECTRICAL WIRING AND LAYOUT DIAGRAMS

SYMBOL	DESCRIPTION
	POLE-TOP ELECTROLIER
CEILING / WALL	
S / S	SURFACE FLUORESCENT, METAL HALIDE, LED, OR SODIUM VAPOR FIXTURE
R / R	RECESSED FLUORESCENT, METAL HALIDE, LED, OR SODIUM VAPOR FIXTURE
X / X	EXIT LIGHT
	SURFACE OR PENDANT INDIVIDUAL FLUORESCENT OR LED FIXTURE
R	RECESSED INDIVIDUAL FLUORESCENT OR LED FIXTURE
	SURFACE OR PENDANT CONTINUOUS ROW FLUORESCENT OR LED FIXTURES

NOTE: A LOWER CASE LETTER NEAR GRAPHIC LIGHTING FIXTURE SYMBOL DENOTES THAT FIXTURE IS CONTROLLED BY A SIMILARLY MARKED SWITCH, AN ALPHA-NUMERIC SYMBOL NEAR GRAPHIC LIGHTING FIXTURE SYMBOL DENOTES FIXTURE TYPE, (I=INCANDESCENT, F=FLUORESCENT, MH=METAL HALIDE, H=HIGH PRESSURE SODIUM VAPOR, L=LED), DESIGN TYPE, NUMBER OF LAMPS AND WATTAGE.

EXAMPLE : (4) F2-2x32
- 32 WATT LAMPS
- 2 LAMPS
- DESIGN TYPE
- FLUORESCENT
- NUMBER OF FIXTURES

B / B	BLANK OUTLET
J / J	JUNCTION BOX
D	DROP CORD
	SINGLE RECEPTACLE OUTLET
	DUPLEX RECEPTACLE OUTLET
(GFCI)	DUPLEX RECEPTACLE OUTLET (WITH GFCI)
(GFCI) WP	DUPLEX RECEPTACLE OUTLET, WEATHERPROOF (WITH GFCI)
	SINGLE, SPECIAL PURPOSE RECEPTACLE OUTLET
	DUPLEX, SPECIAL PURPOSE RECEPTACLE OUTLET
R	RANGE OUTLET
C	CLOCK HANGER RECEPTACLE
F	FAN HANGER RECEPTACLE
	FLOOR SINGLE RECEPTACLE OUTLET
	FLOOR DUPLEX RECEPTACLE OUTLET
	FLOOR SPECIAL PURPOSE OUTLET
	FLOOR RADIO OUTLET
	FLOOR TELEPHONE OUTLET
	MULTI-FLOOR OUTLET, 2 OR MORE GANG
	MULTI-OUTLET ASSEMBLY
S	SWITCH AND SINGLE RECEPTACLE
S	SWITCH AND DUPLEX RECEPTACLE
	RADIO OUTLET
	COMMUNICATION OUTLET
	SOUND SYSTEM LOUD SPEAKER OUTLET
R	RADIO OUTLET
TV	TELEVISION OUTLET
M	MICROPHONE OUTLET
T	THERMOSTAT

SYMBOL	DESCRIPTION
S	SINGLE-POLE SWITCH
S_2	DOUBLE-POLE SWITCH
S_3	THREE-WAY SWITCH
S_4	FOUR-WAY SWITCH
S_D	AUTOMATIC DOOR
S_K	KEY OPERATED SWITCH
S_P	SWITCH AND PILOT LIGHT
S_{MC}	MOMENTARY CONTACT SWITCH
S_{RC}	REMOTE CONTROL SWITCH
S_{WP}	WEATHERPROOF SWITCH
S_F	FAN SWITCH
S_L	LIGHT SWITCH
S_H	HEATER SWITCH
S_{VS}	VARIABLE SPEED MOTOR CONTROL SWITCH
S_{CHLF}	TWO TIMER SWITCHES, ONE SWITCH FOR LIGHT AND FAN AND ONE SWITCH FOR HEAT LAMP
S^O_1	OCCUPANCY SENSOR WALL SWITCH, SINGLE LEVEL
S^O_2	OCCUPANCY SENSOR WALL SWITCH, BILEVEL
S_M	MOTION SENSOR SWITCH
S_T	MANUAL MOTOR STARTING SWITCH, THERMAL OVERLOAD TYPE
S_{HP}	MANUAL MOTOR STARTING SWITCH, WITHOUT OVERLOAD ELEMENT
T_S	TIMER SWITCH
	PUSHBUTTON
L	PUSHBUTTON STATION, NC, WITH LOCKING DEVICE FOR OPEN
	PUSHBUTTON STATION MOTOR CONTROL
	BUZZER
	BELL
	COMBINATION BELL-BUZZER
PS	PRESSURE SWITCH
R	CONTROL RELAY
FS	FLOW SWITCH
PEU	PHOTOELECTRIC UNIT
	HAND DRYER NOZZLE
H	HAND DRYER
	FLUSH-MOUNTED PANELBOARD AND CABINET
	SURFACE-MOUNTED PANELBOARD AND CABINET
	LIGHTING PANEL
	POWER PANEL
	COMBINATION LIGHTING AND POWER
MC	MOTOR CONTROLLER
	DISCONNECT SWITCH
	CONDUIT CONCEALED IN CEILING OR WALL
	CONDUIT CONCEALED IN FLOOR
	CONDUIT EXPOSED
	CROSS-LINES INDICATE NUMBER OF #12 AWG CONDUCTORS. LONGER CROSS-LINE INDICATES 1#12 AWG (G) FOR EQUIPMENT GROUNDING CONDUCTOR. NO CROSS-LINE INDICATES 2#12 WITH 1#12 (G) UNLESS OTHERWISE NOTED. ALL CONDUIT SIZE MUST BE ½" UNLESS OTHERWISE NOTED.
A1,2	HOMERUN TO PANELBOARD, ARROWS INDICATE NUMBER OF CIRCUITS, LETTER DENOTES PANELBOARD, NUMERAL DENOTES CIRCUIT

SYMBOL	DESCRIPTION
SM	SURFACE METAL RACEWAY
(2) ½"C, PVC, 2#12	CONDUCTOR INFO (PER CONDUIT); CONDUIT TYPE; CONDUIT SIZE; NUMBER OF CONDUITS (NO NUMBER INDICATES ONE CONDUIT)
MC	CONDUIT, RIGID STEEL, UNDERGROUND
PVC	CONDUIT, POLYVINYL CHLORIDE, UNDERGROUND
	CONDUIT, FLEXIBLE
	CONDUIT, TURN UP
	CONDUIT, TURN DOWN
	CONDUIT SEAL, EXPLOSION-PROOF
X	CONDUIT, EXPANSION JOINT
	ADAPTER, ONE TYPE CONDUIT TO ANOTHER
	POLE
OC	OCCUPANCY SENSOR
P	OCCUPANCY SENSOR POWER PACK
P	MANUAL PULL STATION
AV	AUDIO/VISUAL ALARM DEVICE
H	HEAT DETECTOR
S	SMOKE DETECTOR
G	GLASS BREAK DISCRIMINATOR
C	MAGNETIC CONTACT SWITCH-PEDESTRIAN DOOR
C	MAGNETIC CONTACT SWITCH-VEHICLE DOOR
K	KEYPAD FOR ALARM SYSTEM
W	COMBINATION DETECTOR (MICROWAVE/PASSIVE INFRARED)
	PULL BOX-LETTER INDICATES TYPE OF PULL BOX (E-ELECTRICAL, T-TELEPHONE, R-RADIO)
(T)	PULL BOX (TRAFFIC-RATED)-LETTER INDICATES TYPE OF PULL BOX (E-ELECTRICAL, T-TELEPHONE, R-RADIO)
CHLF	COMBINATION HEAT, LIGHT, AND FAN UNIT
A / EE-2	SECTION/ELEVATION LETTER; SHEET NUMBER
1 / EE-2	DETAIL NUMBER; SHEET NUMBER

REMODEL WORK

SYMBOL	DESCRIPTION
	EXISTING FLUORESCENT FIXTURE-TO REMAIN
	EXISTING FLUORESCENT FIXTURE-REMOVE
	EXISTING INCANDESCENT FIXTURE-TO REMAIN
	EXISTING INCANDESCENT FIXTURE-REMOVE
	EXISTING OUTLET-TO REMAIN
	EXISTING RECEPTACLE OUTLET-TO REMAIN
	EXISTING RECEPTACLE OUTLET-REMOVE
-E---E-	EXISTING CONDUIT AND CONDUCTORS-TO REMAIN UNLESS OTHERWISE NOTED
-X---X-	EXISTING CONDUIT AND CONDUCTORS-REMOVE
S	EXISTING SWITCH-TO REMAIN
	EXISTING SWITCH-REMOVE
J	EXISTING JUNCTION BOX-TO REMAIN
	EXISTING JUNCTION BOX-REMOVE

GRAPHIC SYMBOLS FOR ELECTRICAL DIAGRAMS

SYMBOL	DESCRIPTION
	CIRCUIT BREAKER, SINGLE-POLE
	CIRCUIT BREAKER, DOUBLE-POLE
	CIRCUIT BREAKER, THREE-POLE
GFCI	CIRCUIT BREAKER, WITH GROUND FAULT CIRCUIT INTERRUPTER
	CIRCUIT BREAKER, SINGLE-POLE, SWITCHED NEUTRAL
	CONTACT, NORMALLY OPEN
	CONTACT, NORMALLY CLOSED
	CONTACT, NORMALLY CLOSED, TIME DELAY CLOSING ON DE-ENERGIZING
	CONTACT, NORMALLY OPEN, TIME DELAY OPENING ON DE-ENERGIZING
	CONTACT, NORMALLY OPEN, TIME DELAY CLOSING ON ENERGIZING
	CONTACT, NORMALLY CLOSED, TIME DELAY OPENING ON ENERGIZING
	CONTACT, SINGLE-POLE, DOUBLE-THROW
	OPERATING COIL
	LIQUID LEVEL ACTUATED SWITCH, NORMALLY CLOSED
	LIQUID LEVEL ACTUATED SWITCH, NORMALLY OPEN
	PRESSURE ACTUATED SWITCH, NORMALLY CLOSED
	PRESSURE ACTUATED SWITCH, NORMALLY OPEN
	FLOW ACTUATED SWITCH, NORMALLY CLOSED
	FLOW ACTUATED SWITCH, NORMALLY OPEN
	TEMPERATURE ACTUATED SWITCH, NORMALLY CLOSED
	TEMPERATURE ACTUATED SWITCH, NORMALLY OPEN
	LIMIT SWITCH, NORMALLY CLOSED
	LIMIT SWITCH, NORMALLY OPEN
	PUSHBUTTON SWITCH, NORMALLY CLOSED
	PUSHBUTTON SWITCH, NORMALLY OPEN
	SWITCH, SINGLE-POLE
	SWITCH, SINGLE-POLE, DOUBLE-THROW
	SWITCH, DOUBLE-POLE
	SWITCH, DOUBLE-POLE, DOUBLE-THROW
	SWITCH, SINGLE-POLE, 3-POSITION
	THERMAL OVERLOAD
	FUSE
	RESISTOR
	VARIABLE RESISTOR
	TRANSFORMER WINDING
	GROUNDING ELECTRODE
	ENCLOSURE BOND
A	PILOT LIGHT (A=AMBER, G=GREEN, R=RED)
A	INDICATING LIGHT (A=AMBER, G=GREEN, R=RED)
G	GENERATOR
M	MOTOR
F	FAN MOTOR

	BY	CHECKED
DESIGN	Imran Saeed	Jim Torkelson
DETAILS	Kathi Andreasen	Imran Saeed
QUANTITIES	Imran Saeed	Jim Torkelson

STATE OF CALIFORNIA
DEPARTMENT OF TRANSPORTATION

DIVISION OF ENGINEERING SERVICES
ELECTRICAL-MECHANICAL-WATER AND WASTEWATER DESIGN

BRIDGE No. 24-273W
POST MILE 23.3

"O" STREET PUMPING PLANT

LEGEND

SHEET EE-0

TAEMWW Imperial - CCSC Rev. 02/13

ORIGINAL SCALE IN INCHES FOR REDUCED PLANS 0 1 2 3

UNIT: 3618 CONTRACT No.: 03-3F0404
PROJECT NUMBER & PHASE: 03120000581

DISREGARD PRINTS BEARING EARLIER REVISION DATES → 9-20-13 | 1-3-14 | 3-28-14 | 4-1-14

REVISION DATES (PRELIMINARY STAGE ONLY) SHEET OF

P:\dist_03\0312000058_o_st_pump_house_rehab\expedite\ee_00.dgn

10-JUN-2014 06:50

Dist	COUNTY	ROUTE	POST MILES TOTAL PROJECT	SHEET No.	TOTAL SHEETS
03	Sac	5	23.3	46	57

REGISTERED ELECTRICAL ENGINEER 04-01-14 DATE

6-9-14
PLANS APPROVAL DATE

REGISTERED PROFESSIONAL ENGINEER Imran Saeed No. E18781 Exp. 06-30-15 ELEC STATE OF CALIFORNIA

The State of California or its officers or agents shall not be responsible for the accuracy or completeness of scanned copies of this plan sheet.

CALIFORNIA STATE FIRE MARSHAL APPROVED FIRE AND PANIC ONLY
Approval of this plan does not authorize or approve any omission or deviation from applicable regulations. Final approval is subject to field inspection. One set of approved plans shall be available on the project site at all times.
Reviewed by: FRANCIS SOLICH
Approval date: 02-05-14

ABBREVIATIONS

A

A/C	AIR CONDITIONING UNIT
ACS	AIR COMPRESSOR STARTER
AFCI	ARC FAULT CIRCUIT INTERRUPTER
AI	ANALOG INPUT
AL	ALARM BYPASS SWITCH
AO	ANALOG OUTPUT
AR	ALARM RESET
ATS	AUTOMATIC TRANSFER SWITCH
AUTO	AUTOMATIC
AVC	AIR VOLUME CONTROLLER

B

BC	BARE COPPER, BEGIN HORIZONTAL CURB
BD	BUILDING DISCONNECT
BP	BOOSTER PUMP
Brk	BREAKER

C

Cat	CATEGORY
CC	CENTER CHANNEL LIGHT, CENTER TO CENTER
CD	CONTROL DISCONNECT
CFR	CONTROL POWER FAILURE RELAY
CM	CENTER MARGIN LIGHT
CPU	CENTRAL PROCESSING UNIT
CPD	CONTROL POWER DISCONNECT
CR	CONTROL RELAY
CS	CURRENT SWITCH
CT	CURRENT TRANSFORMER

D

DI	DIGITAL INPUT, DRAINAGE INLET, DROP INLET
DO	DIGITAL OUTPUT
DP	DUPLEX PLUG RECEPTACLE
DS	DOOR SWITCH

E

(E)	EXISTING
EF	EXHAUST FAN
ENET	ETHERNET NETWORK

F

F	FUSE or FLUORESCENT LIGHT
FA	AC FUSE
FD	DC FUSE
FL	FAILURE LIGHT, FLOW LINE
FLA	FLASHER
Flex	FLEXIBLE CONDUIT
FLS	FLOW SWITCH
FR	FAILURE RESET or FLAME RESISTANT
FS	FLOAT SWITCH, FAR SIDE, FINISH SURFACE
FTS	FIBER OPTIC FLOATS TRANSCEIVER

G

GD	GENERATOR DISCONNECT

I

IL	INDICATING LIGHT
IR	INDUCTION RELAY
ISR	INTRINSICALLY SAFE RELAY

J

JB	JUNCTION BOX

L

L	LIGHT or LENGTH
LC	LIGHTING CONTACTOR
LCD	LIQUID CRYSTAL DISPLAY
LCP	LIGHTING CONTROL PANEL
LD	LIGHT DISCONNECT
LDCI	LEAK DETECTOR CIRCUIT INTERRUPTER
LL	LIQUID LEVEL RELAY
LLC	LIQUID LEVEL CONTROLLER
LP	LIGHT PANEL
LS	LIGHT SWITCH, LUMP SUM
LT	LIGHT TRANSFORMER
LTO	LIGHT TRANSFORMER OVERLOAD
LTPD	LIGHT TRANSFORMER PRIMARY DISCONNECT
LTSD	LIGHT TRANSFORMER SECONDARY DISCONNECT

M

MB	MAIN BREAKER, METAL BEAM
MC	METALLIC CONDUIT
MCP	MOTOR CIRCUIT PROTECTOR
MCC	MOTOR CONTROL CENTER
MD	MOTOR DISCONNECT
MH	MOUNTING HEIGHT, MAN HOLE
MR	MASTER RELAY/STARTER
MS	MOTOR SAVER
MSB	MAIN SWITCHBOARD
MTS	MANUAL TRANSFER SWITCH

N

(N)	NEW
Nav	NAVIGATIONAL LIGHTS
NSW	NEUTRAL SWITCHING BREAKER

O

O/C	ON CENTER
OIT	OPERATOR INTERFACE TERMINAL
OL	OVERLOAD

P

PD	PUMP DISCONNECT
PFR	PHASE FAILURE RELAY
PFRD	PHASE FAILURE RELAY DISCONNECT
PL	PILOT LIGHT
PLC	PROGRAMMABLE LOGIC CONTROLLER
PS	POWER SUPPLY or PRESSURE SWITCH
PTS	POWER TRANSFER SWITCH
PV	PHOTOVOLTAIC

R

R	RELAY
RD	RECEPTACLE DISCONNECT
RECEPT	RECEPTACLE
Req'd	REQUIRED
RES	RESISTOR
RIO	REMOTE INPUT/OUTPUT
RLM	REDUNDANCY LINK MODULE
Rm	ROOM
RTB	RADIO TERMINAL BOARD

S

S	STARTER COIL, SOUTH, SUPPLEMENT
Sch	SCHEDULE
SCADA	SUPERVISORY CONTROL AND DATA ACQUISITION
SD	SERVICE DISCONNECT
SFR	SEAL FAILURE RELAY
SL	SUMP LIGHT
SPD	SURGE PROTECTION DEVICE
SPR	STANDBY POWER RECEPTACLE
Sq	SQUARE
SS	SELECTOR SWITCH, SLOPE STAKE
ST	STARTER
SST	STAINLESS STEEL
SV	SOLENOID VALVE
SWIM	SLOW WEIGH-IN-MOTION

T

TB	TERMINAL BLOCK
TBD	TO BE DETERMINED
TC	TELEPHONE CABLE, TOP OF CURB
TDR	TIME DELAY RELAY
TGLS	TOGGLE SWITCH
TM	TIME METER
TS	TIMER SWITCH or TEMPERATURE SWITCH, TRANSVERSE, TRAFFIC SIGNAL, TUBULAR STEEL
TSW	TEST SWITCH
TTB	TELEPHONE TERMINAL BOARD

U

UPS	UNINTERRUPTIBLE POWER SUPPLY
UD	UTILITY DISCONNECT

V

VFD	VARIABLE FREQUENCY DRIVE

W

WLS	WATER LEVEL SWITCH
WP	WEATHERPROOF
WSMS	WEIGH STATION MESSAGE SIGN

NOTES

1. Separate grounded (Neutral) conductor must be used for each 120-volt circuit.
2. Homeruns to Panelboards must be installed as shown on the plans. Homeruns must not be combined.
3. A single insulated equipment grounding conductor, sized as required, must be installed in each conduit run.

STANDARD PLANS

Dated June, 2010

- A10A
- RSP A10B
- RSP ES-1A
- RSP ES-8A

SYMBOLS

∠	ANGLE
°	DEGREES
Δ	DELTA
Ø	PHASE
±	PLUS OR MINUS

DESIGN	BY Imran Saeed	CHECKED Jim Torkelson	
DETAILS	BY Kathi Andreasen	CHECKED Imran Saeed	
QUANTITIES	BY Imran Saeed	CHECKED Jim Torkelson	

STATE OF CALIFORNIA DEPARTMENT OF TRANSPORTATION

DIVISION OF ENGINEERING SERVICES ELECTRICAL-MECHANICAL-WATER AND WASTEWATER DESIGN

BRIDGE No. 24-273W
POST MILE 23.3

"O" STREET PUMPING PLANT

NOTES AND ABBREVIATIONS

SHEET EE-1

TAEMWW Imperial - CCSC Rev. 02/13

ORIGINAL SCALE IN INCHES FOR REDUCED PLANS 0 1 2 3

UNIT: 3618 CONTRACT No.: 03-3F0404
PROJECT NUMBER & PHASE: 03120000581

DISREGARD PRINTS BEARING EARLIER REVISION DATES → 9-26-13 1-3-14 3-28-14 4-1-14

REVISION DATES (PRELIMINARY STAGE ONLY) SHEET OF

10-JUN-2014 06:50

P:\dist_03\0312000058_o_st_pump_house_rehab\expedite\ee_01.dgn

NOTE:

FOR ACCURATE RIGHT OF WAY DATA, CONTACT
RIGHT OF WAY ENGINEERING AT THE DISTRICT OFFICE.

CALIFORNIA STATE FIRE MARSHAL APPROVED FIRE AND PANIC ONLY
Approval of this plan does not authorize or approve any omission or deviation from applicable regulations. Final approval is subject to field inspection. One set of approved plans shall be available on the project site at all times.
Reviewed by: FRANCIS SOLICH
Approval date: 02-05-14

Dist	COUNTY	ROUTE	POST MILES TOTAL PROJECT	SHEET No.	TOTAL SHEETS
03	Sac	5	23.3	47	57

Imran Saeed 04-01-14
REGISTERED ELECTRICAL ENGINEER DATE

6-9-14
PLANS APPROVAL DATE

REGISTERED PROFESSIONAL ENGINEER Imran Saeed No. E18781 Exp. 06-30-15 ELEC STATE OF CALIFORNIA

The State of California or its officers or agents shall not be responsible for the accuracy or completeness of scanned copies of this plan sheet.

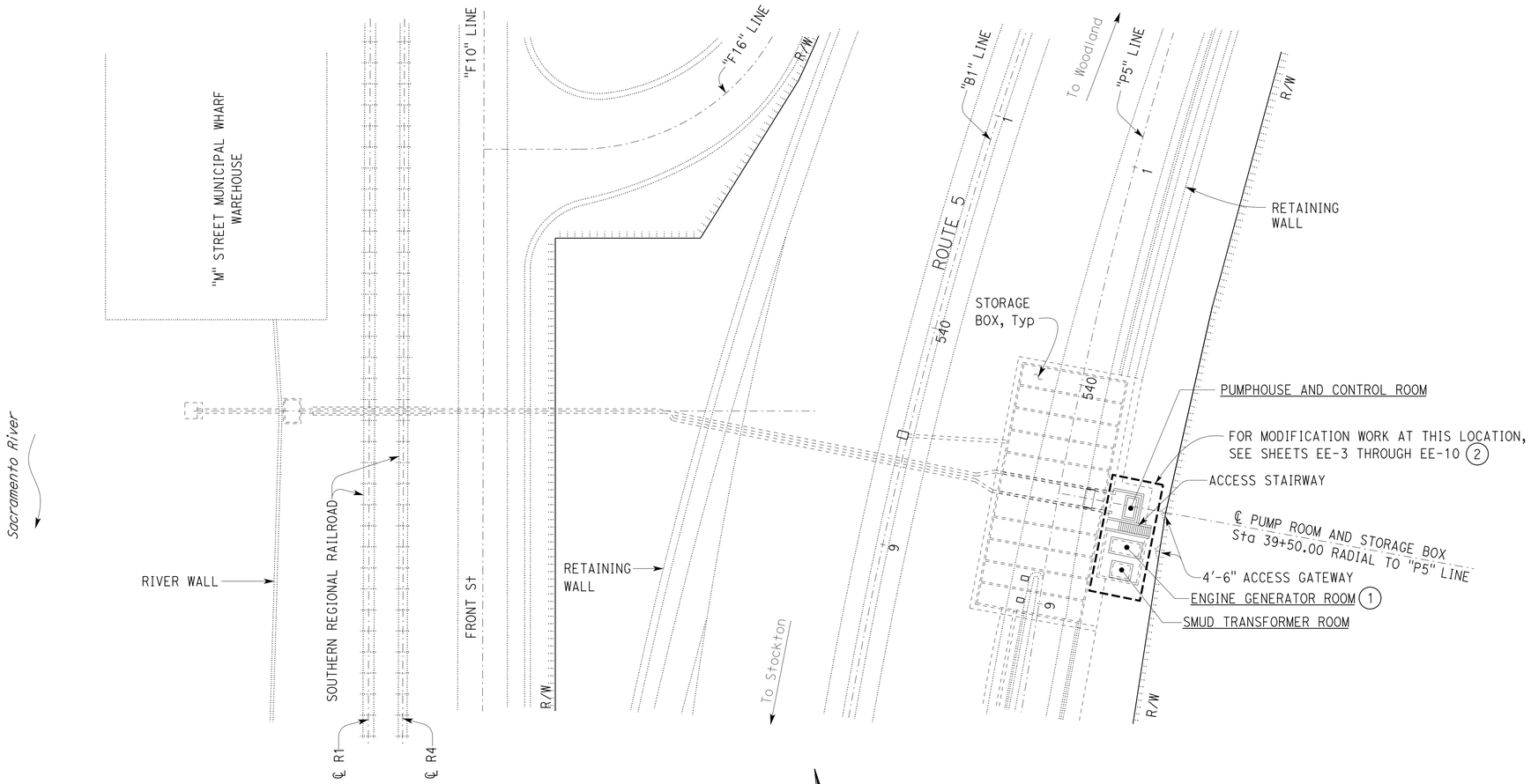

PLAN
1" = 30'

LEGEND:

(1) Remove existing generator and install new 275 kW, 480 V diesel engine generator. See sheet EE-3 for detail.

(2) Maintain power to temporary pumps throughout the Pump House modification work. See sheet EE-11 for detail.

APPROVED FOR ELECTRICAL WORK ONLY.

DESIGN SUPERVISOR
DESIGN ENGINEER

	BY	CHECKED
DESIGN	Imran Saeed	Jim Torkelson
DETAILS	Kathi Andreasen	Imran Saeed
QUANTITIES	Imran Saeed	Jim Torkelson

STATE OF CALIFORNIA
DEPARTMENT OF TRANSPORTATION

DIVISION OF ENGINEERING SERVICES
ELECTRICAL-MECHANICAL-WATER AND WASTEWATER DESIGN

BRIDGE No. 24-273W
POST MILE 23.3

"O" STREET PUMPING PLANT
EXISTING SITE PLAN

SHEET EE-2

TAEMWW Imperial - CCSC Rev. 02/13

ORIGINAL SCALE IN INCHES FOR REDUCED PLANS 0 1 2 3

UNIT: 3618 CONTRACT No.: 03-3F0404
PROJECT NUMBER & PHASE: 03120000581

DISREGARD PRINTS BEARING
EARLIER REVISION DATES → REVISION DATES (PRELIMINARY STAGE ONLY) 11-6-13 11-21-13 12-16-13 1-3-14 3-28-14 4-1-14 SHEET OF

10-JUN-2014 06:50
P:\dist_03\0312000058_o_st_pump_house_rehab\expedite\ee_02.dgn

NOTES:

A. Verify all controlling field dimensions before ordering or fabricating any material.

B. Existing electrical equipment inside the Generator and Pump Rooms are not shown for clarity. Existing electrical equipment includes generator, generator automatic transfer switch, lighting transformer, load centers disconnect switches, exhaust fans, lighting fixtures, receptacles, conduits and wiring. Remove all existing electrical equipment not utilized in this project. To identify existing equipment, a copy of as-built plans can be requested. Some of existing conduits can be used after authorization.

C. Conduits shown with light lineweight are existing and can be reused. For quantity and size of wires inside existing conduits, see sheets EE-9 and EE-10.

D. Install wire nuts and wire numbers on spare pair of wires inside junction boxes.

E. Some of the work on this sheet is also shown on sheets EE-9 and EE-10.

LEGEND:

1. Core drill through existing wall for conduit penetration.
2. Install alarm light and air horn at existing light pole.
3. Existing 3"C, 3#600 MCM, 1#2G. See also Note 8 on sheet EE-9.
4. 1"C, 6#10, 4#10 (Spare).
5. ¾"C, Low-Loss antenna cable.
6. ¾"C, 4#10, 2#10 (Spare) 1#10G.
7. 1"C, 7#10, 2#10 (Spare), 1#10G.
8. Install conduit adaptor and connect to existing conduit.
9. 1"C, 4#10, 4#10 (Spare), 1#10G.
10. ¾"C, 4#10, 2#10 (Spare).
11. 4"C, 3#600 MCM, 1#2G.
12. 1"C, 12#10, 4#10 (Spare).
13. Exhaust fan cord and plug, Typ.
14. Submersible type cast junction box. Electrical connections inside the junction box and conduit terminations must be watertight. See sheet EE-4 for typical detail.
15. 1"C, 10#10, 4#10 (Spare).
16. ¾"C, 6#10, 2#10 (Spare).
17. 3"C, 6#3/0, 10#10 (Spare).
18. Pumps are not shown for clarity. See Mechanical plans for detail.

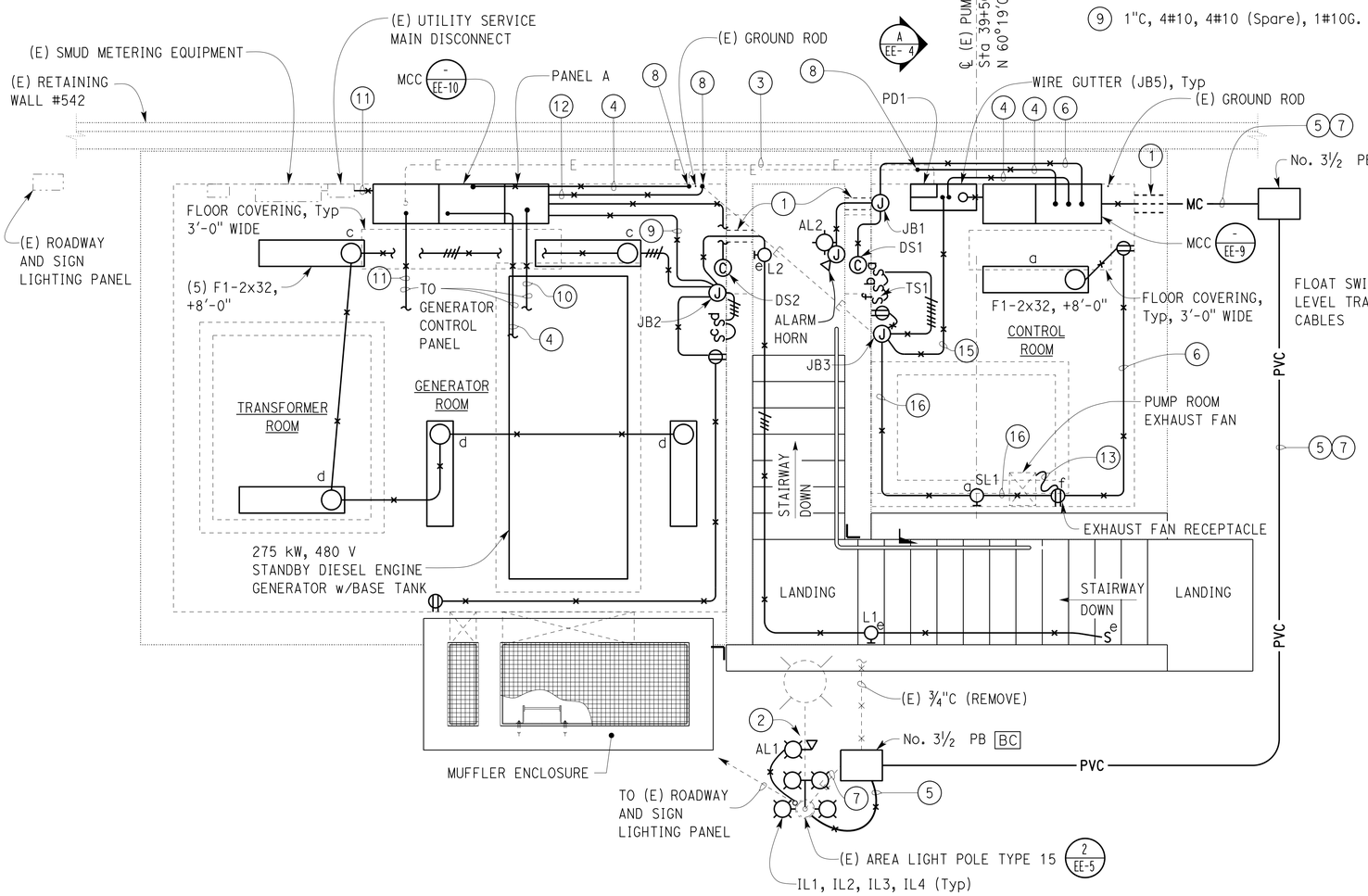

GENERATOR ROOM & CONTROL ROOM PLAN

⅜" = 1'-0"

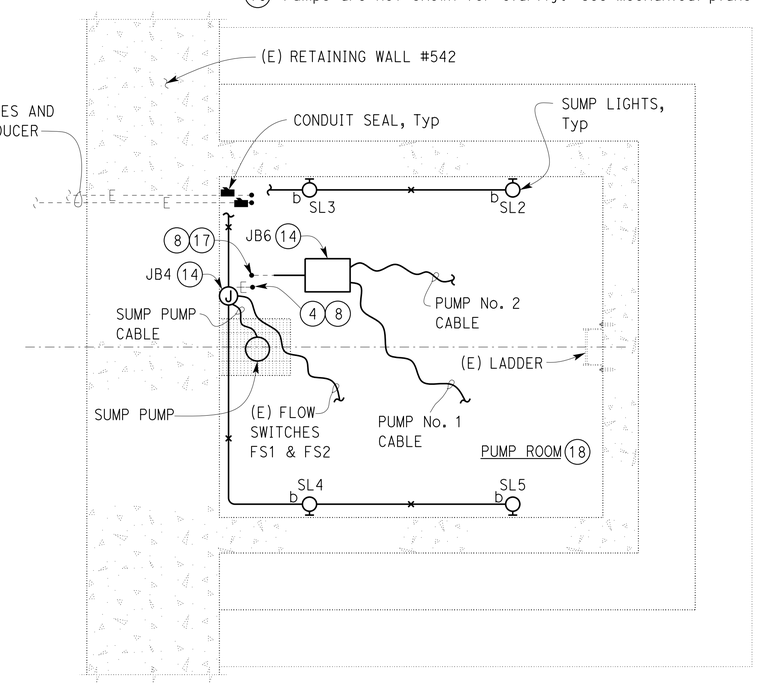

PUMP ROOM PLAN

⅜" = 1'-0"

APPROVED FOR ELECTRICAL WORK ONLY.

CALIFORNIA STATE FIRE MARSHAL APPROVED FIRE AND PANIC ONLY
Approval of this plan does not authorize or approve any omission or deviation from applicable regulations. Final approval is subject to field inspection. One set of approved plans shall be available on the project site at all times.
Reviewed by: FRANCIS SOLICH
Approval date: 02-05-14

Dist	COUNTY	ROUTE	POST MILES TOTAL PROJECT	SHEET No.	TOTAL SHEETS
03	Sac	5	23.3	48	57

REGISTERED ELECTRICAL ENGINEER — DATE 04-01-14

6-9-14
PLANS APPROVAL DATE

REGISTERED PROFESSIONAL ENGINEER Imran Saeed No. E18781 Exp. 06-30-15 ELEC STATE OF CALIFORNIA

The State of California or its officers or agents shall not be responsible for the accuracy or completeness of scanned copies of this plan sheet.

	BY	CHECKED
DESIGN	Imran Saeed	Jim Torkelson
DETAILS	Kathi Andreasen	Imran Saeed
QUANTITIES	Imran Saeed	Jim Torkelson

STATE OF CALIFORNIA DEPARTMENT OF TRANSPORTATION

DIVISION OF ENGINEERING SERVICES ELECTRICAL-MECHANICAL-WATER AND WASTEWATER DESIGN

BRIDGE No. 24-273W
POST MILE 23.3

"O" STREET PUMPING PLANT
PUMP HOUSE POWER AND LIGHTING PLAN

SHEET EE-3

TAEMWW Imperial - CCSC Rev. 02/13

ORIGINAL SCALE IN INCHES FOR REDUCED PLANS 0 1 2 3

UNIT: 3618 CONTRACT No.: 03-3F0404
PROJECT NUMBER & PHASE: 03120000581

DISREGARD PRINTS BEARING EARLIER REVISION DATES → 9-23-13 | 11-7-13 | 12-16-13 | 1-3-14 | 3-28-14 | 4-1-14

REVISION DATES (PRELIMINARY STAGE ONLY) SHEET OF

P:\dist_03\0312000058_o_st_pump_house_rehab\expedite\ee_03.dgn

10-JUN-2014 06:50

NOTE:

A. Verify all controlling field dimensions before ordering or fabricating any material.

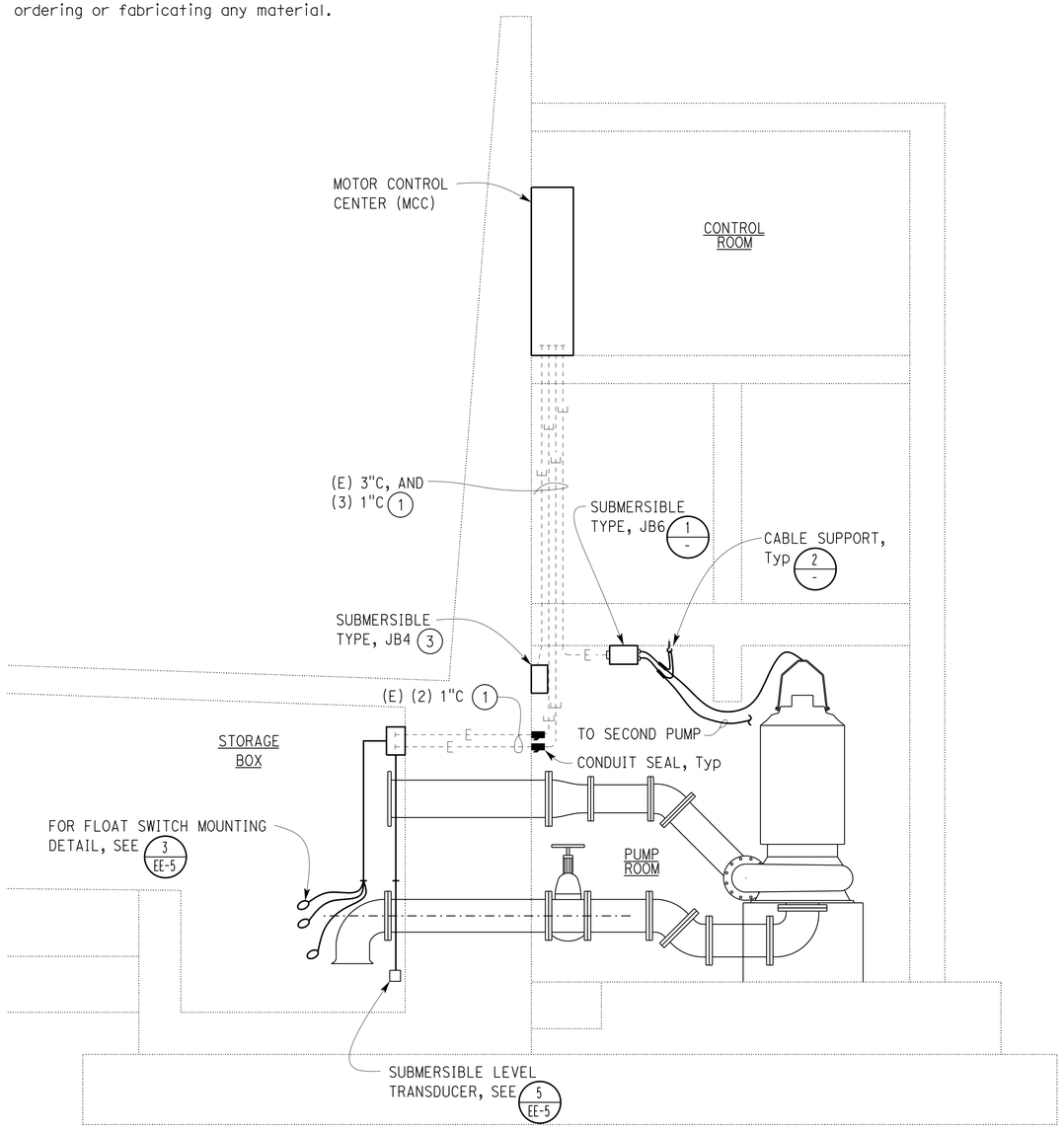

(A) SECTION

3/8" = 1'-0"

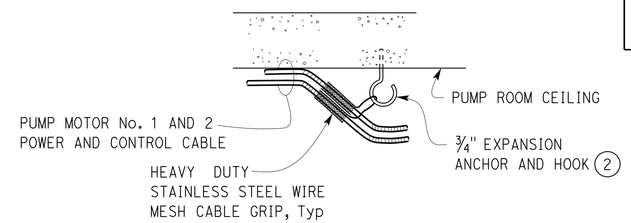

(2) DETAIL (Typ)

NO SCALE

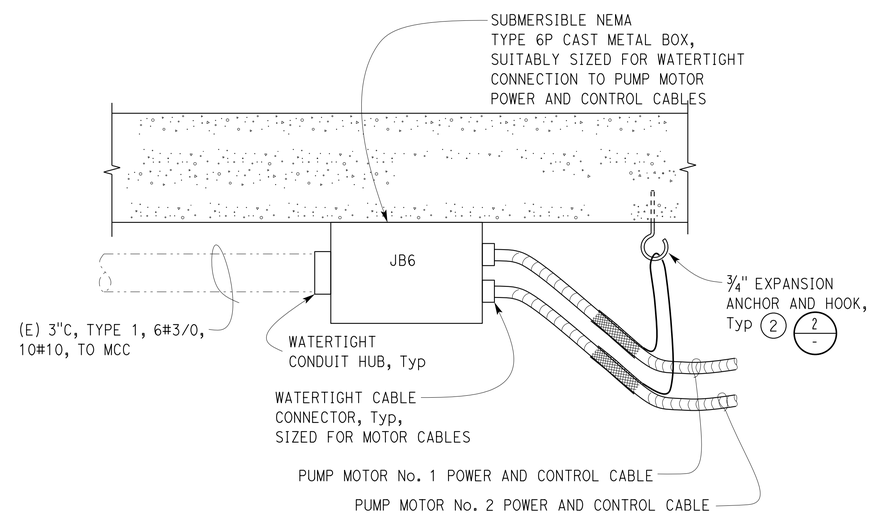

(1) DETAIL (Typ)

NO SCALE

LEGEND:

(1) For number and quantity of wires inside existing conduits, see "PUMP ROOM PLAN" on sheet EE-3.

(2) Provide cable support every 6 feet and 8 feet of cable slack, tied up in circle at first cable support.

(3) Provide watertight connections and similarly rated junction box as JB6, suitably sized for sump pump motor connections, with cable grip and supports.

CALIFORNIA STATE FIRE MARSHAL APPROVED FIRE AND PANIC ONLY
Approval of this plan does not authorize or approve any omission or deviation from applicable regulations. Final approval is subject to field inspection. One set of approved plans shall be available on the project site at all times.
Reviewed by: FRANCIS SOLICH
Approval date: 02-05-14

Dist	COUNTY	ROUTE	POST MILES TOTAL PROJECT	SHEET No.	TOTAL SHEETS
03	Sac	5	23.3	49	57

REGISTERED ELECTRICAL ENGINEER — DATE 04-01-14

6-9-14
PLANS APPROVAL DATE

REGISTERED PROFESSIONAL ENGINEER — Imran Saeed — No. E18781 — Exp. 06-30-15 — ELEC — STATE OF CALIFORNIA

The State of California or its officers or agents shall not be responsible for the accuracy or completeness of scanned copies of this plan sheet.

APPROVED FOR ELECTRICAL WORK ONLY.

	BY	CHECKED
DESIGN	Imran Saeed	Jim Torkelson
DETAILS	Kathi Andreasen	Imran Saeed
QUANTITIES	Imran Saeed	Jim Torkelson

STATE OF CALIFORNIA
DEPARTMENT OF TRANSPORTATION

DIVISION OF ENGINEERING SERVICES
ELECTRICAL-MECHANICAL-WATER AND WASTEWATER DESIGN

BRIDGE No. 24-273W
POST MILE 23.3

"O" STREET PUMPING PLANT

PUMP HOUSE
SECTION AND DETAILS

SHEET EE-4

TAEMWW Imperial - CCSC Rev. 02/13

ORIGINAL SCALE IN INCHES FOR REDUCED PLANS 0 1 2 3

UNIT: 3618 CONTRACT No.: 03-3F0404
PROJECT NUMBER & PHASE: 03120000581

DISREGARD PRINTS BEARING EARLIER REVISION DATES → 11-8-13 | 11-26-13 | 12-16-13 | 1-3-14 | 3-28-14 | 4-1-14

REVISION DATES (PRELIMINARY STAGE ONLY) SHEET OF

P:\dist_03\0312000058_o_st_pump_house_rehab\expedite\ee_04.dgn

10-JUN-2014 06:50

Dist	COUNTY	ROUTE	POST MILES TOTAL PROJECT	SHEET No.	TOTAL SHEETS
03	Sac	5	23.3	50	57

REGISTERED ELECTRICAL ENGINEER — DATE 04-01-14

PLANS APPROVAL DATE 6-9-14

REGISTERED PROFESSIONAL ENGINEER — Imran Saeed — No. E18781 — Exp. 06-30-15 — ELEC — STATE OF CALIFORNIA

The State of California or its officers or agents shall not be responsible for the accuracy or completeness of scanned copies of this plan sheet.

CALIFORNIA STATE FIRE MARSHAL APPROVED FIRE AND PANIC ONLY
Approval of this plan does not authorize or approve any omission or deviation from applicable regulations. Final approval is subject to field inspection. One set of approved plans shall be available on the project site at all times.
Reviewed by: FRANCIS SOLICH
Approval date: 02-05-14

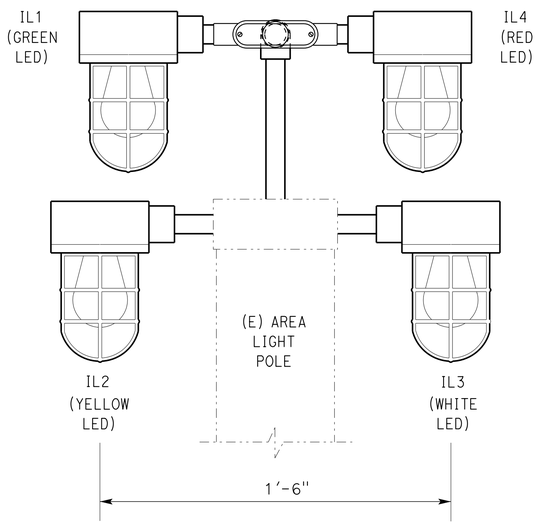

ELEVATION
NO SCALE

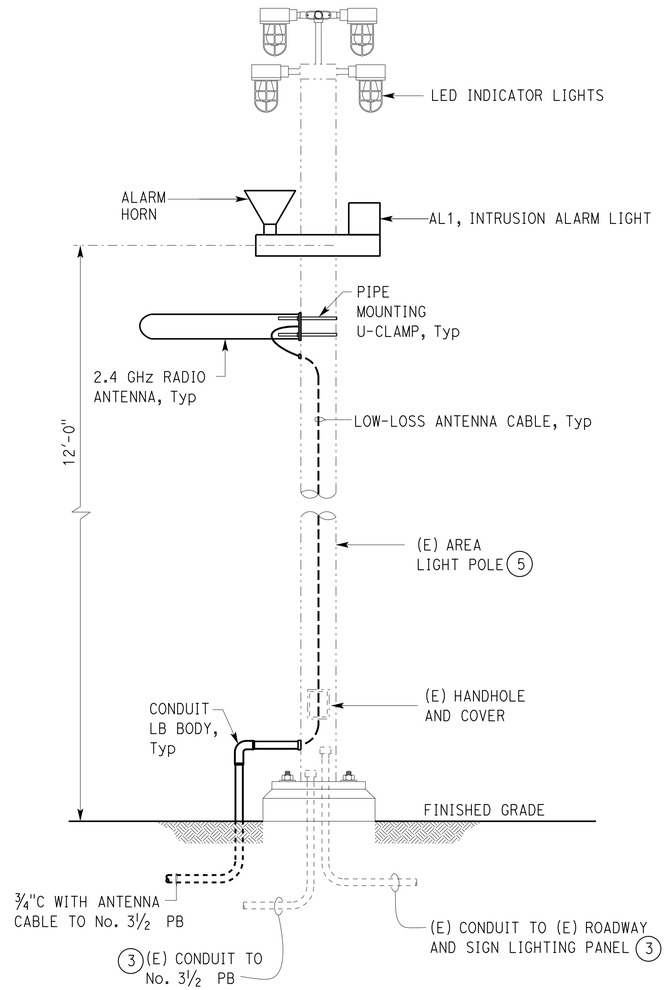

2 INDICATOR LIGHTS POLE DETAIL
NO SCALE

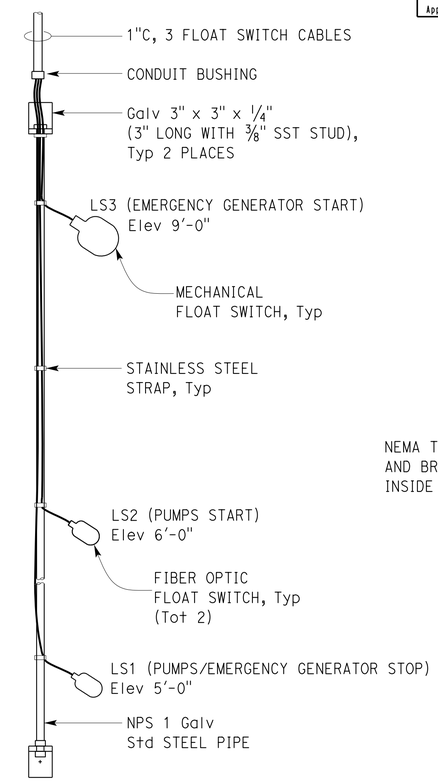

3 FLOAT SWITCH MOUNTING DETAIL
NO SCALE

LEGEND:

1. Provide appropriate dessicant bag at the termination of the breathing tube. Loop 18" of cable inside the box.
2. Install wire mesh cable grip and attach to conduit with stainless steel cable tie.
3. For number and size of wires inside existing conduit, see "GENERATOR ROOM & CONTROL ROOM PLAN" on sheet EE-3.
4. Point radio antenna direction towards Front St. Generator Building antenna. See plan sheet EE-12 for detail.
5. Area light not shown for clarity.

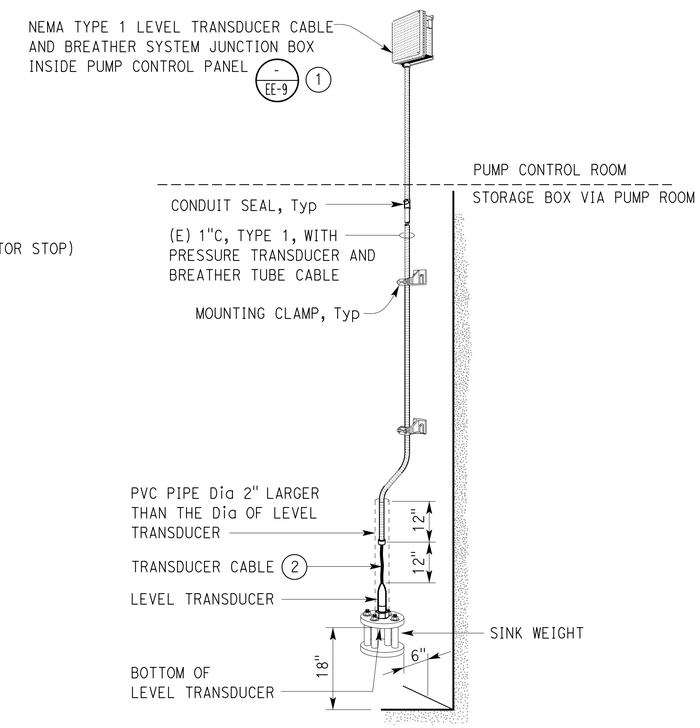

5 SUBMERSIBLE LEVEL TRANSDUCER MOUNTING DETAIL
NO SCALE

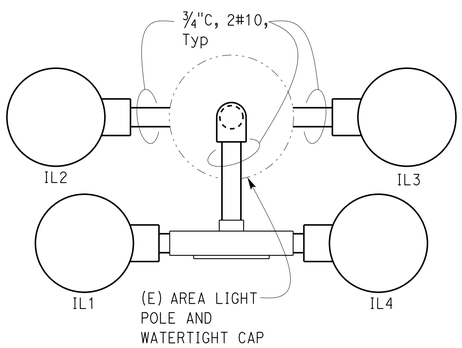

PLAN
1 INDICATOR LIGHTS MOUNTING DETAIL
NO SCALE

THIS DRAWING ACCURATE FOR ELECTRICAL WORK ONLY

	BY	CHECKED
DESIGN	Imran Saeed	Jim Torkelson
DETAILS	Kathi Andreasen	Imran Saeed
QUANTITIES	Imran Saeed	Jim Torkelson

STATE OF CALIFORNIA DEPARTMENT OF TRANSPORTATION

DIVISION OF ENGINEERING SERVICES ELECTRICAL-MECHANICAL-WATER AND WASTEWATER DESIGN

BRIDGE No. 24-273W — POST MILE 23.3

"O" STREET PUMPING PLANT — DETAILS

SHEET EE-5

TAEMWW Imperial - CCSC Rev. 02/13

ORIGINAL SCALE IN INCHES FOR REDUCED PLANS 0 1 2 3

UNIT: 3618 CONTRACT No.: 03-3F0404
PROJECT NUMBER & PHASE: 03120000581

DISREGARD PRINTS BEARING EARLIER REVISION DATES → 9-22-13 11-26-13 12-17-13 1-3-14 2-18-14 3-28-14 4-1-14

REVISION DATES (PRELIMINARY STAGE ONLY) — SHEET — OF

10-JUN-2014 06:51

P:\dist_03\0312000058_o_st_pump_house_rehab\expedite\ee_05.dgn

CALIFORNIA STATE FIRE MARSHAL
APPROVED FIRE AND PANIC ONLY
Approval of this plan does not authorize or approve any omission or deviation from applicable regulations. Final approval is subject to field inspection. One set of approved plans shall be available on the project site at all times.
Reviewed by: FRANCIS SOLICH
Approval date: 02-05-14

Dist	COUNTY	ROUTE	POST MILES TOTAL PROJECT	SHEET No.	TOTAL SHEETS
03	Sac	5	23.3	51	57

REGISTERED ELECTRICAL ENGINEER — DATE 04-01-14

6-9-14
PLANS APPROVAL DATE

REGISTERED PROFESSIONAL ENGINEER — Imran Saeed — No. E18781 — Exp. 06-30-15 — ELEC — STATE OF CALIFORNIA

The State of California or its officers or agents shall not be responsible for the accuracy or completeness of scanned copies of this plan sheet.

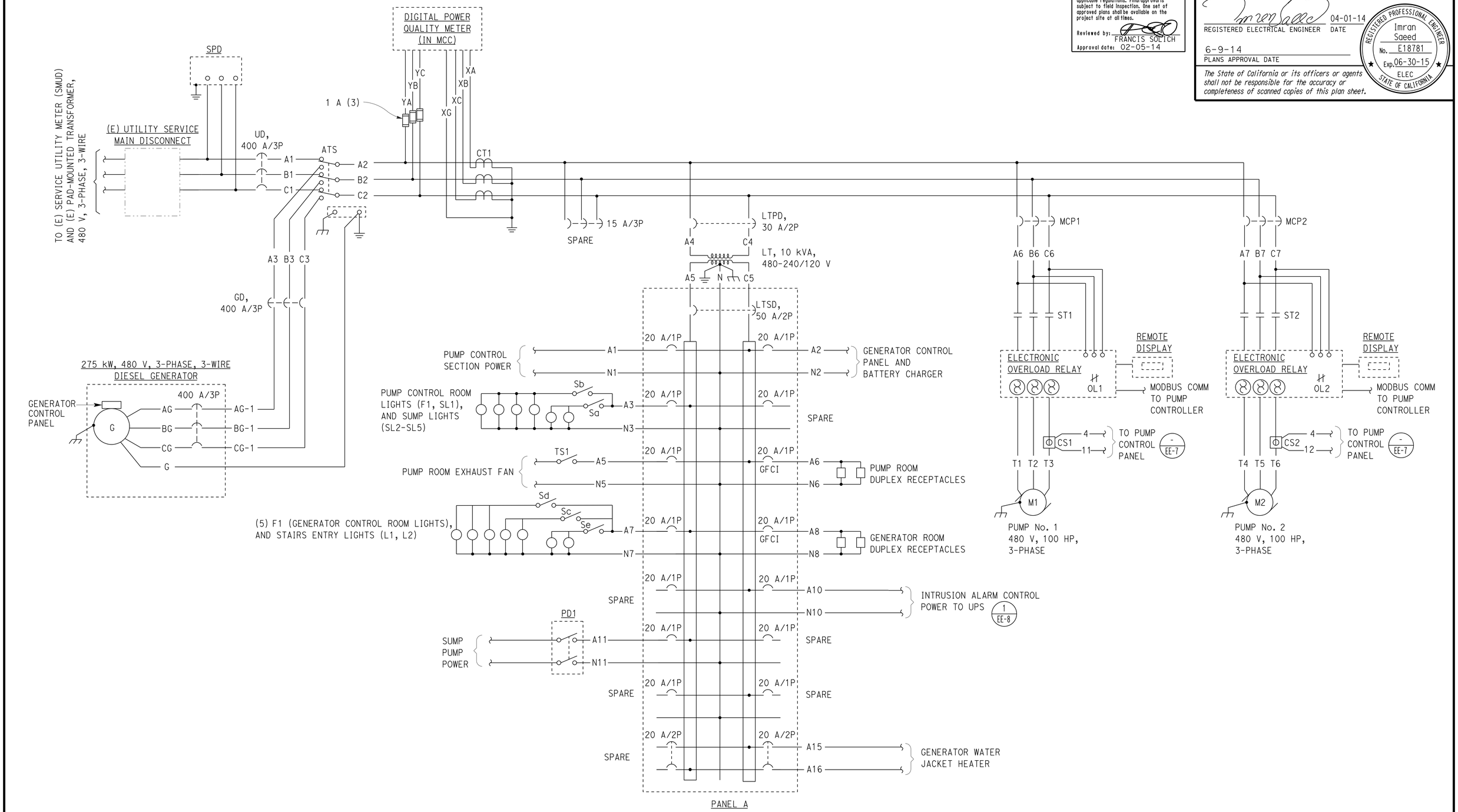

	BY	CHECKED
DESIGN	Imran Saeed	Jim Torkelson
DETAILS	Kathi Andreasen	Imran Saeed
QUANTITIES	Imran Saeed	Jim Torkelson

STATE OF CALIFORNIA
DEPARTMENT OF TRANSPORTATION

DIVISION OF ENGINEERING SERVICES
ELECTRICAL-MECHANICAL-WATER AND WASTEWATER DESIGN

BRIDGE No. 24-273W
POST MILE 23.3

"O" STREET PUMPING PLANT

POWER SCHEMATIC DIAGRAM

SHEET EE-6

TAEMWW Imperial - CCSC Rev. 02/13

ORIGINAL SCALE IN INCHES FOR REDUCED PLANS 0 1 2 3

UNIT: 3618 CONTRACT No.: 03-3F0404
PROJECT NUMBER & PHASE: 03120000581

DISREGARD PRINTS BEARING EARLIER REVISION DATES → 9-23-13 12-17-13 1-3-14 3-28-14 4-1-14

REVISION DATES (PRELIMINARY STAGE ONLY) SHEET OF

10-JUN-2014 06:51

P:\dist_03\0312000058_o_st_pump_house_rehab\expedite\ee_06.dgn

Dist	COUNTY	ROUTE	POST MILES TOTAL PROJECT	SHEET No.	TOTAL SHEETS
03	Sac	5	23.3	52	57

REGISTERED ELECTRICAL ENGINEER 04-01-14 DATE

6-9-14
PLANS APPROVAL DATE

REGISTERED PROFESSIONAL ENGINEER Imran Saeed No. E18781 Exp. 06-30-15 ELEC STATE OF CALIFORNIA

The State of California or its officers or agents shall not be responsible for the accuracy or completeness of scanned copies of this plan sheet.

CALIFORNIA STATE FIRE MARSHAL APPROVED FIRE AND PANIC ONLY
Approval of this plan does not authorize or approve any omission or deviation from applicable regulations. Final approval is subject to field inspection. One set of approved plans shall be available on the project site at all times.
Reviewed by: FRANCIS SOLICH
Approval date: 02-05-14

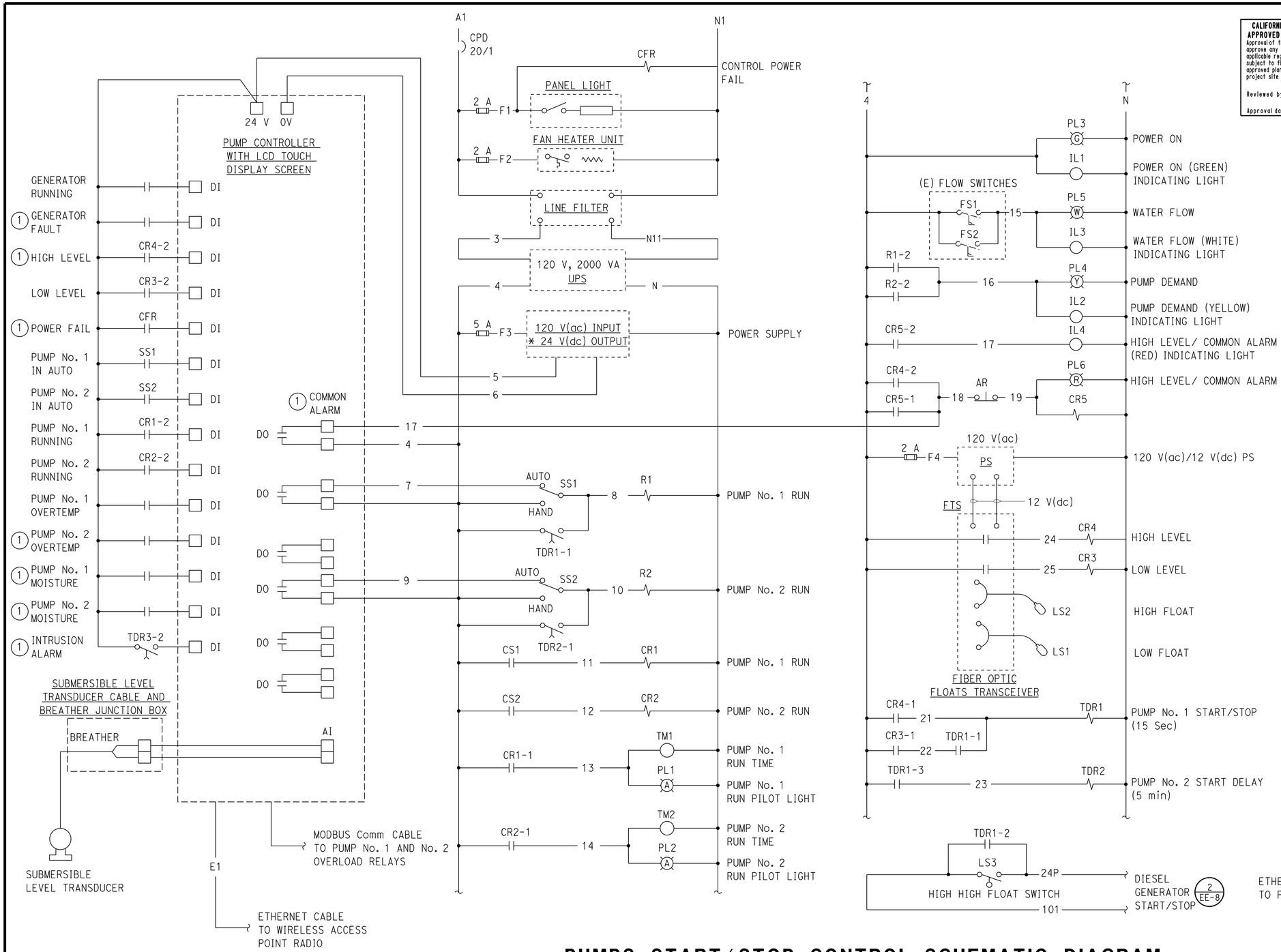

LEGEND:

(1) Program pump controller digital output for common alarm signal from alarm inputs.

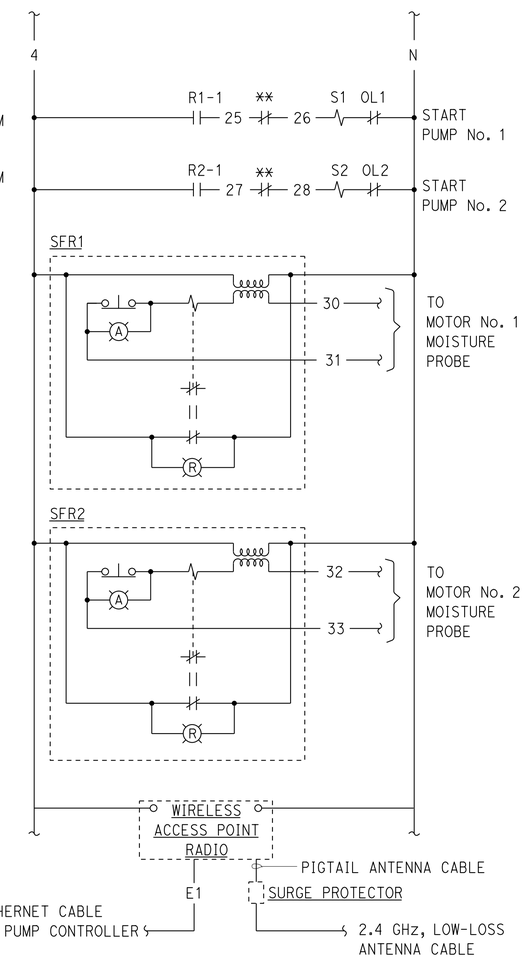

* Voltage as required by the manufacturer of pump controller

** Pump motor integral thermal protection

PUMPS START/STOP CONTROL SCHEMATIC DIAGRAM

DESIGN	BY Imran Saeed	CHECKED Jim Torkelson	
DETAILS	BY Kathi Andreasen	CHECKED Imran Saeed	
QUANTITIES	BY Imran Saeed	CHECKED Jim Torkelson	

STATE OF CALIFORNIA
DEPARTMENT OF TRANSPORTATION

DIVISION OF ENGINEERING SERVICES
ELECTRICAL-MECHANICAL-WATER AND WASTEWATER DESIGN

BRIDGE No. 24-273W
POST MILE 23.3

"O" STREET PUMPING PLANT
CONTROL SCHEMATIC DIAGRAM 1

SHEET EE-7

TAEMWW Imperial - CCSC Rev. 02/13

ORIGINAL SCALE IN INCHES FOR REDUCED PLANS 0 1 2 3

UNIT: 3618 CONTRACT No.: 03-3F0404
PROJECT NUMBER & PHASE: 03120000581

DISREGARD PRINTS BEARING EARLIER REVISION DATES

REVISION DATES (PRELIMINARY STAGE ONLY) 9-21-13 12-18-13 1-3-14 3-28-14 4-1-14 SHEET OF

10-JUN-2014 06:50

P:\dist_03\0312000058_o_st_pump_house_rehab\expedite\ee_07.dgn

Dist	COUNTY	ROUTE	POST MILES TOTAL PROJECT	SHEET No.	TOTAL SHEETS
03	Sac	5	23.3	53	57

REGISTERED ELECTRICAL ENGINEER 04-01-14 DATE

6-9-14
PLANS APPROVAL DATE

REGISTERED PROFESSIONAL ENGINEER Imran Saeed No. E18781 Exp. 06-30-15 ELEC STATE OF CALIFORNIA

The State of California or its officers or agents shall not be responsible for the accuracy or completeness of scanned copies of this plan sheet.

CALIFORNIA STATE FIRE MARSHAL APPROVED FIRE AND PANIC ONLY
Approval of this plan does not authorize or approve any omission or deviation from applicable regulations. Final approval is subject to field inspection. One set of approved plans shall be available on the project site at all times.
Reviewed by: FRANCIS SOLICH
Approval date: 02-05-14

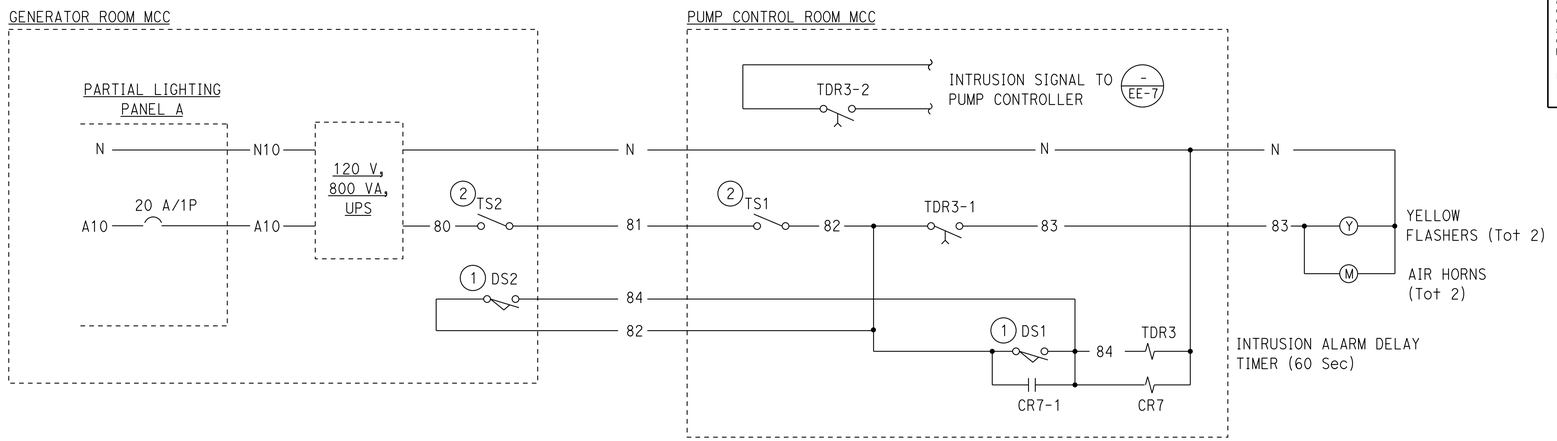

1 INTRUSION ALARM CONTROL SCHEMATIC DIAGRAM

LEGEND:

1. Contact must close when door opens.
2. 120 Minute springwound timer switch.
3. Generator must start in automatic mode, when water level in storage box reaches high high level float switch (LS3) during utility power failure. Generator must stop after water level drops below low level fiber optic float switch (LS1), or utility power restores. ATS must be programmed to stop the generator, with 5 minutes delay after each automatic start, to avoid short start/stop cycle of the generator.

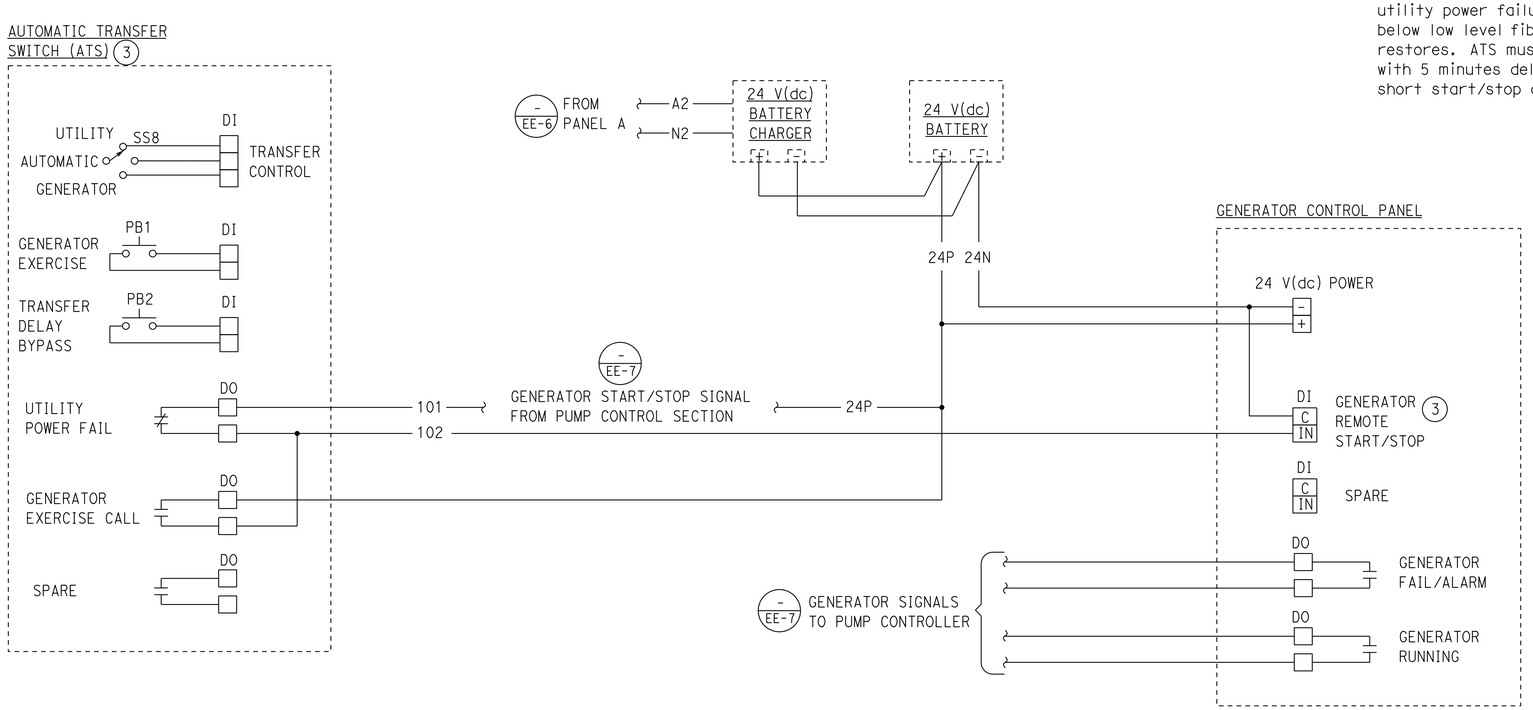

2 GENERATOR START/STOP CONTROL SCHEMATIC DIAGRAM (Typ)

	BY	CHECKED
DESIGN	Imran Saeed	Jim Torkelson
DETAILS	Kathi Andreasen	Imran Saeed
QUANTITIES	Imran Saeed	Jim Torkelson

STATE OF CALIFORNIA DEPARTMENT OF TRANSPORTATION

DIVISION OF ENGINEERING SERVICES ELECTRICAL-MECHANICAL-WATER AND WASTEWATER DESIGN

BRIDGE No. 24-273W
POST MILE 23.3

"O" STREET PUMPING PLANT
CONTROL SCHEMATIC DIAGRAM 2

SHEET EE-8

TAEMWW Imperial - CCSC Rev. 02/13

ORIGINAL SCALE IN INCHES FOR REDUCED PLANS 0 1 2 3

UNIT: 3618 CONTRACT No.: 03-3F0404
PROJECT NUMBER & PHASE: 03120000581

DISREGARD PRINTS BEARING EARLIER REVISION DATES

REVISION DATES (PRELIMINARY STAGE ONLY) 9-24-13 1-3-14 3-28-14 4-1-14 SHEET OF

10-JUN-2014 06:50

P:\dist_03\0312000058_o_st_pump_house_rehab\expedite\ee_08.dgn

Dist	COUNTY	ROUTE	POST MILES TOTAL PROJECT	SHEET No.	TOTAL SHEETS
03	Sac	5	23.3	54	57

REGISTERED ELECTRICAL ENGINEER 04-01-14 DATE

6-9-14
PLANS APPROVAL DATE

REGISTERED PROFESSIONAL ENGINEER Imran Saeed No. E18781 Exp. 06-30-15 ELEC STATE OF CALIFORNIA

The State of California or its officers or agents shall not be responsible for the accuracy or completeness of scanned copies of this plan sheet.

CALIFORNIA STATE FIRE MARSHAL APPROVED FIRE AND PANIC ONLY
Approval of this plan does not authorize or approve any omission or deviation from applicable regulations. Final approval is subject to field inspection. One set of approved plans shall be available on the project site at all times.
Reviewed by: FRANCIS SOLICH
Approval date: 02-05-14

LEGEND:

(1) The following component must be mounted inside the Control Section: CR1, CR2, CR3, CR4,TDR1, CR5, TDR2, R1, R2, SFR1, SFR2, power supplies, and FTS.

(2) CS1 and current transformers for Pump No. 1 electronic overload must be installed inside this compartment.

(3) CS2 and current transformers for Pump No. 2 electronic overload must be installed inside this compartment.

(4) MCC Section 4 must be 24" wide, 18" deep and 72" in height.

(5) Pump Control Section must be 30" wide, 18" deep and 72" in height.

(6) See "Warning Label" this sheet.

(7) Install ground clamp and 1#1/0 grounding electrode conductor from MCC Section 4 in 1"C. Bond ground bus of MCC sections together through bare copper conductors.

(8) Existing 3"C may be used to pull new conductors for Pump Room MCC Section power, otherwise install a new 4"C at ceiling height, running exposed between Generator Room MCC ATS Section and Pump Control Room MCC Section. Core drill into the Generator Room and Pump Control Room walls for conduit penetration.

(9) JB3 is located at south wall of Pump Control Room, near entrance. See sheet EE-3 for details.

(10) Remove existing conductors and cables and install new conductors and cables as shown.

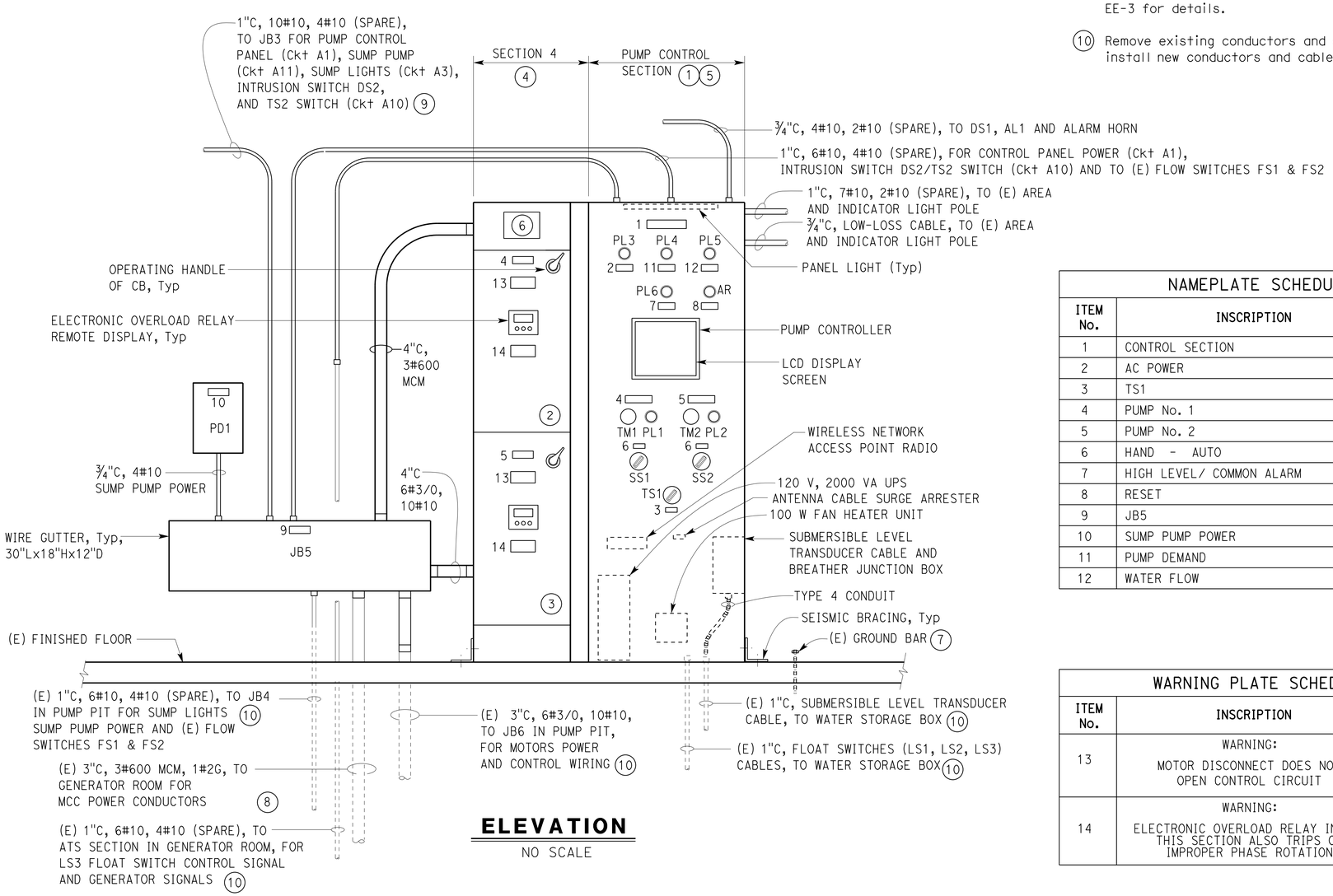

ELEVATION
NO SCALE

NAMEPLATE SCHEDULE

ITEM No.	INSCRIPTION	LETTER HEIGHT
1	CONTROL SECTION	½"
2	AC POWER	¼"
3	TS1	¼"
4	PUMP No. 1	½"
5	PUMP No. 2	½"
6	HAND - AUTO	¼"
7	HIGH LEVEL/ COMMON ALARM	¼"
8	RESET	¼"
9	JB5	¼"
10	SUMP PUMP POWER	¼"
11	PUMP DEMAND	
12	WATER FLOW	

WARNING PLATE SCHEDULE

ITEM No.	INSCRIPTION	LETTER HEIGHT
13	WARNING: MOTOR DISCONNECT DOES NOT OPEN CONTROL CIRCUIT	¼"
14	WARNING: ELECTRONIC OVERLOAD RELAY INSIDE THIS SECTION ALSO TRIPS ON IMPROPER PHASE ROTATION	¼"

NOTES:

A. Verify all controlling field dimensions before ordering or fabricating any material.

B. Seismic bracing and anchorage for the Motor Control Center must be installed per manufacturer's recommendation to meet Seismic Zone 4 requirements.

C. Core drill thru existing wall for conduit entry.

D. Install wire nuts and wire numbers to spare pair of wires inside junction boxes.

E. Some of the work on this sheet is also shown on sheets EE-3 and EE-10.

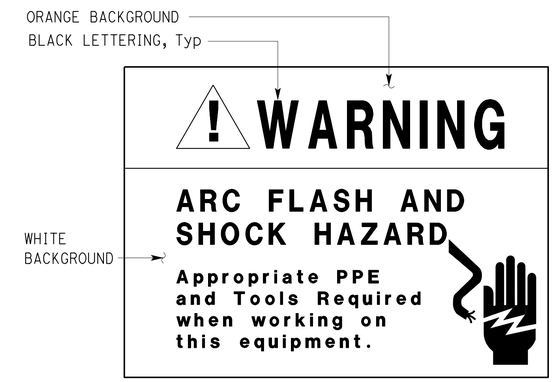

WARNING LABEL*

* Warning label must be constructed with high degree of chemical abrasion, heat resistance and UL recognized material.

THIS DRAWING ACCURATE FOR ELECTRICAL WORK ONLY

	BY	CHECKED
DESIGN	Imran Saeed	Jim Torkelson
DETAILS	Kathi Andreasen	Imran Saeed
QUANTITIES	Imran Saeed	Jim Torkelson

STATE OF CALIFORNIA DEPARTMENT OF TRANSPORTATION

DIVISION OF ENGINEERING SERVICES ELECTRICAL-MECHANICAL-WATER AND WASTEWATER DESIGN

BRIDGE No. 24-273W
POST MILE 23.3

"O" STREET PUMPING PLANT
PUMP CONTROL ROOM MCC ELEVATION

SHEET EE-9

TAEMWW Imperial - CCSC Rev. 02/13

ORIGINAL SCALE IN INCHES FOR REDUCED PLANS 0 1 2 3

UNIT: 3618 CONTRACT No.: 03-3F0404
PROJECT NUMBER & PHASE: 03120000581

DISREGARD PRINTS BEARING EARLIER REVISION DATES
REVISION DATES (PRELIMINARY STAGE ONLY) 03-24-13 11-27-13 1-3-14 3-28-14 4-1-14 SHEET OF

10-JUN-2014 06:50
P:\dist_03\0312000058_o_st_pump_house_rehab\expedite\ee_09.dgn

Dist	COUNTY	ROUTE	POST MILES TOTAL PROJECT	SHEET No.	TOTAL SHEETS
03	Sac	5	23.3	55	57

REGISTERED ELECTRICAL ENGINEER — DATE 04-01-14

PLANS APPROVAL DATE 6-9-14

REGISTERED PROFESSIONAL ENGINEER — Imran Saeed — No. E18781 — Exp. 06-30-15 — ELEC — STATE OF CALIFORNIA

The State of California or its officers or agents shall not be responsible for the accuracy or completeness of scanned copies of this plan sheet.

CALIFORNIA STATE FIRE MARSHAL APPROVED FIRE AND PANIC ONLY
Approval of this plan does not authorize or approve any omission or deviation from applicable regulations. Final approval is subject to field inspection. One set of approved plans shall be available on the project site at all times.
Reviewed by: FRANCIS SOLICH
Approval date: 02-05-14

NOTES:

A. Verify all controlling field dimensions before ordering or fabricating any material.

B. Seismic bracing and anchorage for the Motor Control Center must be installed per manufacturer's recommendation to meet Seismic Zone 4 requirements.

C. Core drill thru existing wall for conduit entry.

D. Install wire nuts and wire numbers to spare pair of wires inside junction boxes.

E. Some of the work on this sheet is also shown on sheets EE-3 and EE-9.

LEGEND:

(1) Mount warning label on the exterior door. See "Warning Label" 1, this sheet.

(2) Mount warning label on the exterior door. See "Warning Label" 2, this sheet.

(3) MCC Main Power Section must be 30" wide, 18" deep and 72" in height.

(4) MCC ATS Section must be 30" wide, 18" deep and 72" in height.

(5) MCC Power Distribution Section must be 20" wide, 18" deep and 72" in height.

(6) You may use existing 3"C to pull new conductors for Pump Room MCC Section power, otherwise install a new 4"C at ceiling height, running exposed, between Generator Room MCC ATS Section and Pump Control Room MCC Section. Core drill into the Generator Room and Pump Control Room walls for conduit penetration.

(7) JB3 is located at south wall of Pump Control Room, near entrance.

(8) Install ground clamp and 1#1/0 grounding electrode conductor from MCC ATS Section in 1"C. Bond ground bus of MCC Sections together through bare copper conductors.

(9) Remove existing conductors and cables and install new conductors and cables as shown.

(10) 120 V, 800 VA UPS for backup power to intrusion alarm system must be installed inside this section. See Detail No. 1 on sheet EE-8.

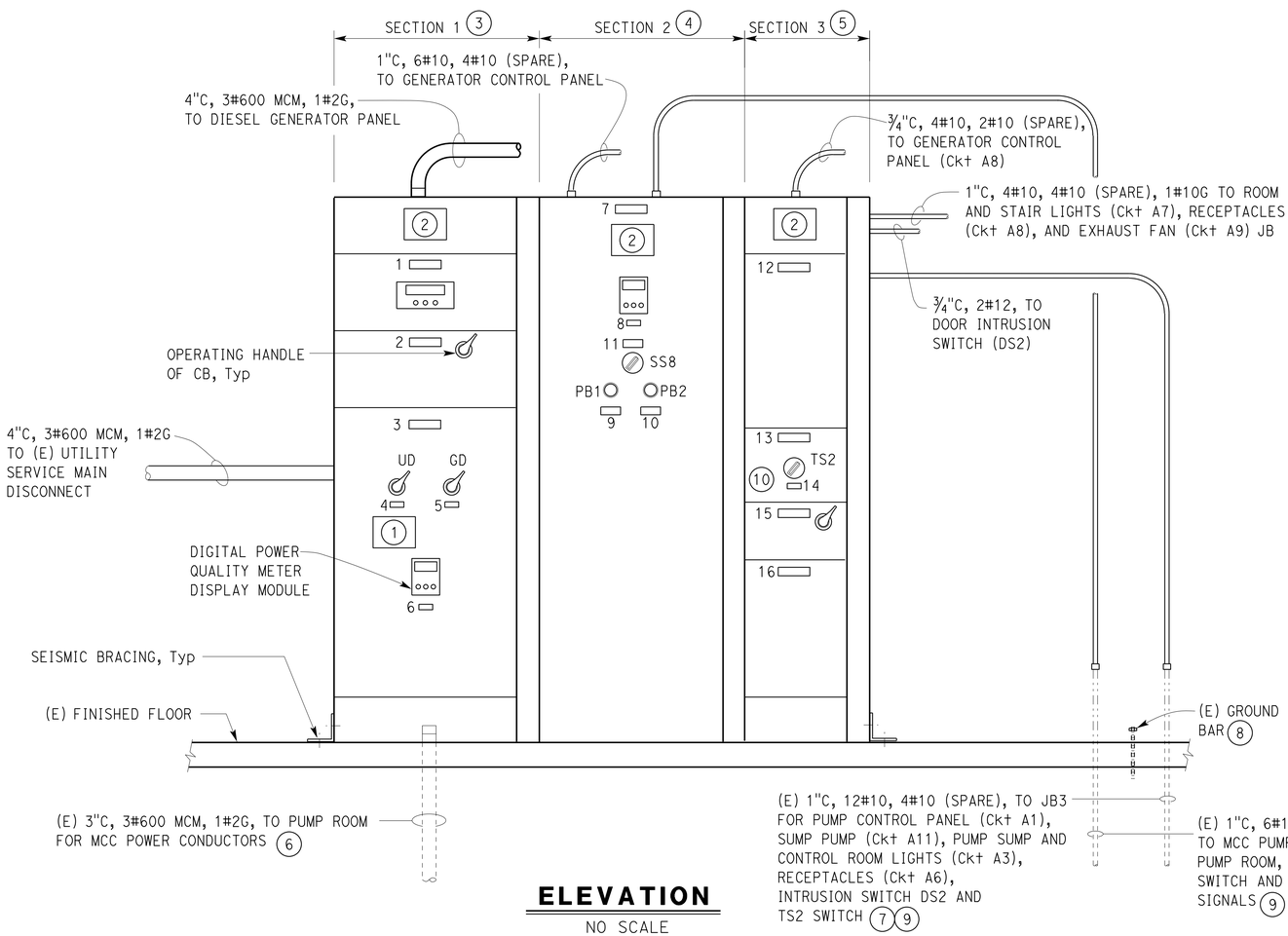

ELEVATION
NO SCALE

APPROVED FOR ELECTRICAL WORK ONLY.

NAMEPLATE SCHEDULE

ITEM No.	INSCRIPTION	LETTER HEIGHT
1	SURGE PROTECTION DEVICE	1/4"
2	SPARE	1/4"
3	480 V POWER SECTION	1/2"
4	UTILITY DISCONNECT	1/2"
5	GENERATOR DISCONNECT	1/2"
6	DIGITAL POWER METER	1/2"
7	AUTOMATIC TRANSFER SWITCH	1/2"
8	ATS INTERFACE	1/2"
9	TRANSFER DELAY BYPASS	1/2"
10	GENERATOR EXERCISE	1/2"
11	UTILITY AUTOMATIC GENERATOR	1/2"
12	LIGHTING PANEL "A" 240/120 V, 1-PHASE, 3-WIRE	1/2"
13	ALARM SECTION	1/4"
14	TS2	1/4"
15	LIGHTING TRANSFORMER PRIMARY	1/4"
16	LIGHTING TRANSFORMER 10 kVA, 480-120/240 V	1/4"

WARNING LABEL NOTES:

* Warning label must be constructed with high degree of chemical abrasion, heat resistance and UL recognized material

** Legibly marked label with the available fault current to comply with NEC 110.21 (A)

** The Engineer will provide this data

ORANGE BACKGROUND
BLACK LETTERING, Typ
WHITE BACKGROUND

WARNING

ARC FLASH AND SHOCK HAZARD

Appropriate PPE and Tools Required when working on this equipment.

Available Fault Current:
**

Installation Date:
**

(1) **WARNING LABEL***

ORANGE BACKGROUND
BLACK LETTERING, Typ
WHITE BACKGROUND

WARNING

ARC FLASH AND SHOCK HAZARD

Appropriate PPE and Tools Required when working on this equipment.

(2) **WARNING LABEL***

DESIGN	BY Imran Saeed	CHECKED Jim Torkelson	
DETAILS	BY Kathi Andreasen	CHECKED Imran Saeed	
QUANTITIES	BY Imran Saeed	CHECKED Jim Torkelson	

STATE OF CALIFORNIA
DEPARTMENT OF TRANSPORTATION

DIVISION OF ENGINEERING SERVICES
ELECTRICAL-MECHANICAL-WATER AND WASTEWATER DESIGN

BRIDGE No. 24-273W
POST MILE 23.3

"O" STREET PUMPING PLANT
GENERATOR ROOM MCC ELEVATION

SHEET EE-10

TAEMWW Imperial - CCSC Rev. 02/13

ORIGINAL SCALE IN INCHES FOR REDUCED PLANS 0 1 2 3

UNIT: 3618 CONTRACT No.: 03-3F0404
PROJECT NUMBER & PHASE: 03120000581

DISREGARD PRINTS BEARING EARLIER REVISION DATES → 9-24-13 11-22-13 1-3-14 4-1-14

REVISION DATES (PRELIMINARY STAGE ONLY) SHEET OF

P:\dist_03\0312000058_o_st_pump_house_rehab\expedite\ee_10.dgn 10-JUN-2014 06:50

Dist	COUNTY	ROUTE	POST MILES TOTAL PROJECT	SHEET No.	TOTAL SHEETS
03	Sac	5	23.3	56	57

REGISTERED ELECTRICAL ENGINEER 04-01-14 DATE

6-9-14
PLANS APPROVAL DATE

The State of California or its officers or agents shall not be responsible for the accuracy or completeness of scanned copies of this plan sheet.

REGISTERED PROFESSIONAL ENGINEER Imran Saeed No. E18781 Exp. 06-30-15 ELEC STATE OF CALIFORNIA

CALIFORNIA STATE FIRE MARSHAL APPROVED FIRE AND PANIC ONLY
Approval of this plan does not authorize or approve any omission or deviation from applicable regulations. Final approval is subject to field inspection. One set of approved plans shall be available on the project site at all times.
Reviewed by: FRANCIS SOLICH
Approval date: 02-05-14

NOTES:

A. Verify all controlling field dimensions before ordering or fabricating any material.

B. Not all existing electrical and mechanical equipment is shown for clarity.

C. Wherever possible, existing equipment, conduits, and conductors may be used for keeping temporary pumps operational after authorization. Otherwise, install new temporary power and control wiring in flexible metal conduits and controls necessary to keep temporary pumps operational as needed.

D. Coordinate temporary pumps power and control wiring throughout Pump House modification work. See sheets EE-3 through EE-10 for Pump House modification work detail.

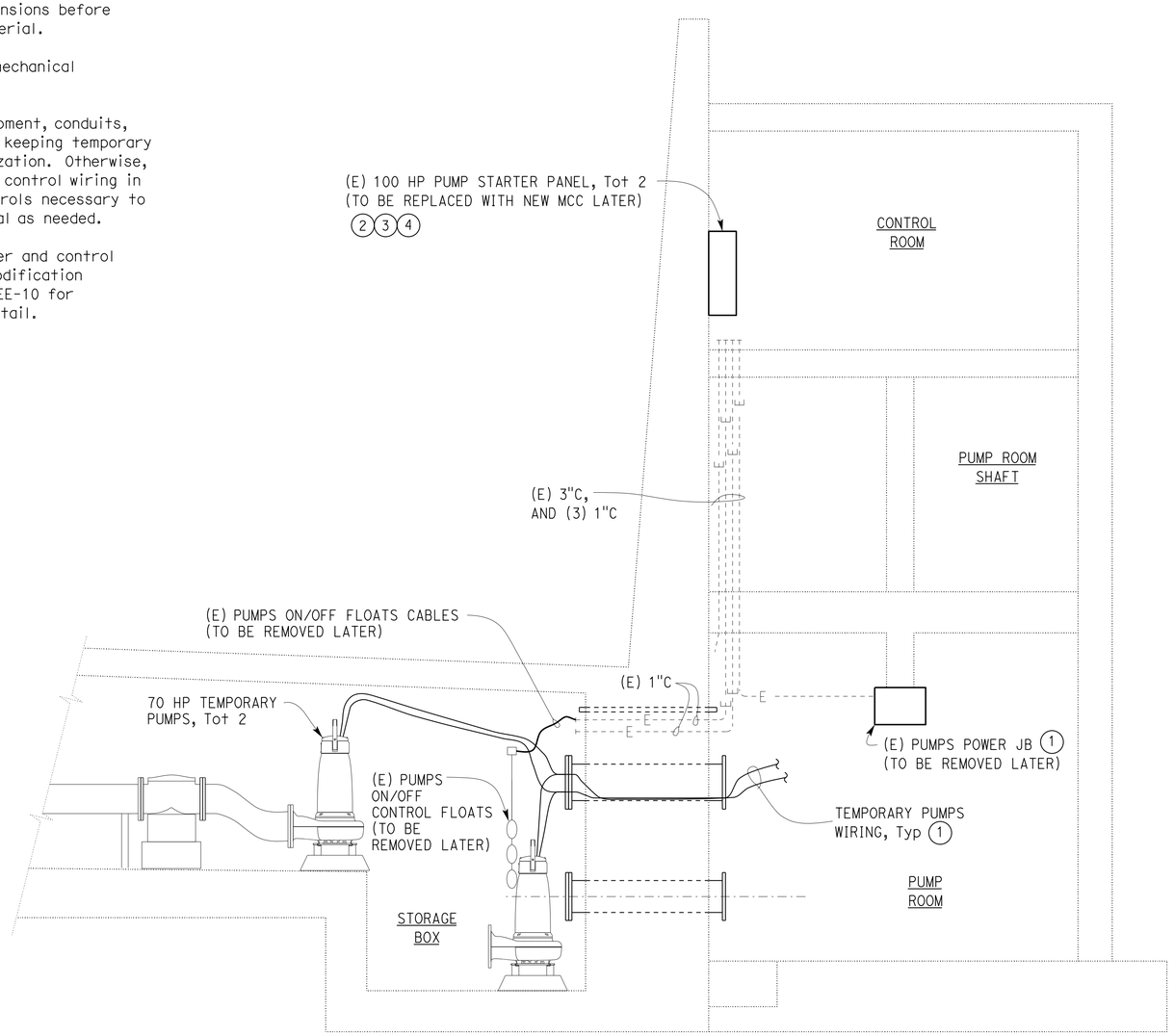

A SECTION
3/8" = 1'-0"

LEGEND:

1. Temporary pumps power cables can be terminated to existing motors power wiring inside existing pumps power JB, to control temporary pumps on/off operation through existing pump starter panels. Provide proper support of temporary pumps cables. In case of conflict during installation of new pumps, install power and control wiring for temporary pumps in flexible metal conduit and terminate into the pump starter panels directly. Route and support the flexible metal conduit through pump room shaft properly to avoid any conflict during construction.

2. Replace heater elements in existing 100 HP pump starter with new heater elements, sized to protect 70 HP temporary pumps, cornforming to manufacturer's instructions.

3. At later stage during construction, terminate the wiring of temporary pumps to the new MCC after the removal of existing 100 HP pump starters. For new MCC detail, see sheet EE-9. Program the electronic overload in new MCC pump sections to protect 70 HP temporary pumps.

4. Feeder conductors for existing 100 HP pump starter panels come from Generator Room in existing 3" underground conduit. During construction inside Generator Room, run temporary feeder conductors for pump starter panels in flexible metal conduit from existing 400-ampere main disconnect inside Generator Room.

APPROVED FOR ELECTRICAL WORK ONLY.

	BY	CHECKED
DESIGN	Imran Saeed	Jim Torkelson
DETAILS	Kathi Andreasen	Imran Saeed
QUANTITIES	Imran Saeed	Jim Torkelson

STATE OF CALIFORNIA
DEPARTMENT OF TRANSPORTATION

DIVISION OF ENGINEERING SERVICES
ELECTRICAL-MECHANICAL-WATER AND WASTEWATER DESIGN

BRIDGE No. 24-273W
POST MILE 23.3

"O" STREET PUMPING PLANT
TEMPORARY PUMPS
POWER AND CONTROL PLAN

SHEET EE-11

TAEMWW Imperial - CCSC Rev. 02/13

ORIGINAL SCALE IN INCHES FOR REDUCED PLANS 0 1 2 3

UNIT: 3618 CONTRACT No.: 03-3F0404
PROJECT NUMBER & PHASE: 03120000581

DISREGARD PRINTS BEARING EARLIER REVISION DATES
REVISION DATES (PRELIMINARY STAGE ONLY): 12-16-13 1-3-14 1-10-14 3-28-14 4-1-14

SHEET OF

10-JUN-2014 06:50
P:\dist_03\0312000058_o_st_pump_house_rehab\expedite\ee_11.dgn

NOTE:

FOR ACCURATE RIGHT OF WAY DATA, CONTACT RIGHT OF WAY ENGINEERING AT THE DISTRICT OFFICE.

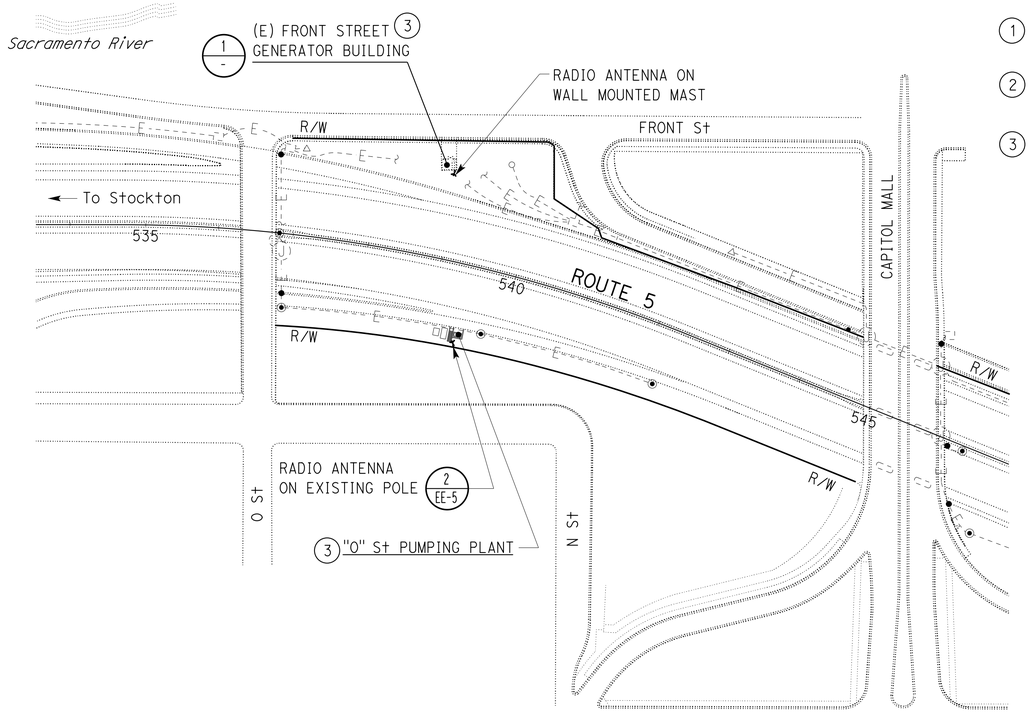

WIRELESS NETWORK PLAN

NO SCALE

LEGEND:

1. Core drill through existing wall for conduit penetratrion. Seal the conduit and antenna cable entry points.
2. Connect wireless access point radio to existing internet router network switch port using CAT-5 Ethernet cable.
3. Install 2.4 GHz industrial wireless access point radios, directional antennas, antenna cables and adapters for connecting "O" St Pumping Plant pump controller to existing internet connection available at Front Street Generator Building over wireless ethernet bridge connection. For connection detail, see 3.

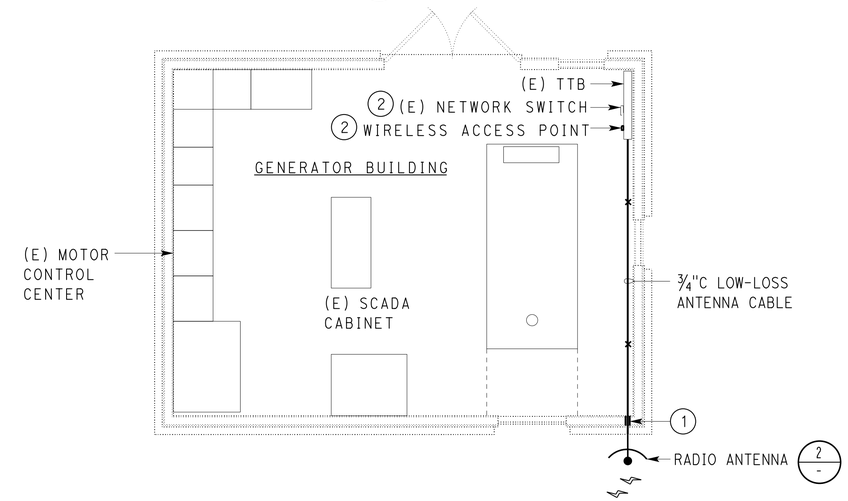

1 GENERATOR BUILDING LAYOUT

NO SCALE

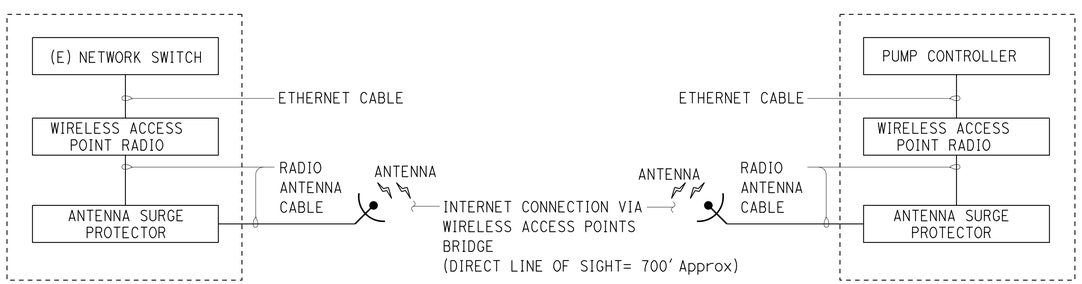

FRONT STREET GENERATOR BUILDING

'O' STREET PUMP PLANT BUILDING

3 WIRELESS NETWORK BLOCK DIAGRAM

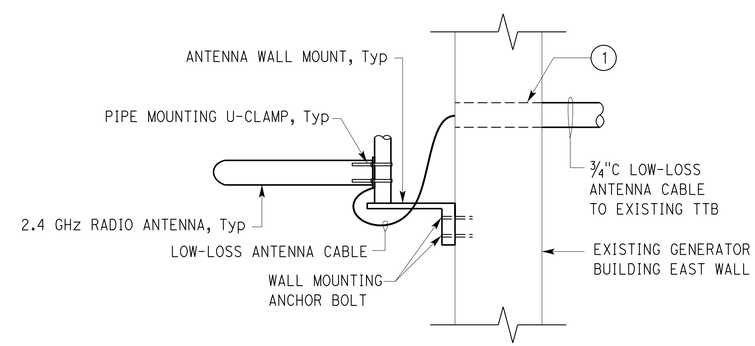

2 ANTENNA WALL MOUNT, Typ

NO SCALE

APPROVED FOR ELECTRICAL WORK ONLY.

CALIFORNIA STATE FIRE MARSHAL APPROVED FIRE AND PANIC ONLY
Approval of this plan does not authorize or approve any omission or deviation from applicable regulations. Final approval is subject to field inspection. One set of approved plans shall be available on the project site at all times.
Reviewed by: FRANCIS SOLICH
Approval date: 02-05-14

Dist	COUNTY	ROUTE	POST MILES TOTAL PROJECT	SHEET No.	TOTAL SHEETS
03	Sac	5	23.3	57	57

REGISTERED ELECTRICAL ENGINEER — DATE 04-01-14

PLANS APPROVAL DATE 6-9-14

REGISTERED PROFESSIONAL ENGINEER Imran Saeed No. E18781 Exp. 06-30-15 ELEC STATE OF CALIFORNIA

The State of California or its officers or agents shall not be responsible for the accuracy or completeness of scanned copies of this plan sheet.

DESIGN	BY Imran Saeed	CHECKED Jim Torkelson	
DETAILS	BY Kathi Andreasen	CHECKED Imran Saeed	
QUANTITIES	BY Imran Saeed	CHECKED Jim Torkelson	

STATE OF CALIFORNIA DEPARTMENT OF TRANSPORTATION

DIVISION OF ENGINEERING SERVICES ELECTRICAL-MECHANICAL-WATER AND WASTEWATER DESIGN

BRIDGE No. 24-273W POST MILE 23.3

"O" STREET PUMPING PLANT

WIRELESS NETWORK DETAIL

SHEET EE-12

TAEMWW Imperial - CCSC Rev. 02/13

ORIGINAL SCALE IN INCHES FOR REDUCED PLANS 0 1 2 3

UNIT: 3618 CONTRACT No.: 03-3F0404
PROJECT NUMBER & PHASE: 03120000581

DISREGARD PRINTS BEARING EARLIER REVISION DATES 1-15-14 4-1-14

REVISION DATES (PRELIMINARY STAGE ONLY) SHEET OF

10-JUN-2014 06:50

P:\dist_03\0312000058_o_st_pump_house_rehab\expedite\ee_12.dgn