Dist	COUNTY	ROUTE	POST MILES TOTAL PROJECT	SHEET No.	TOTAL SHEETS
03	Sac	50	R5.3/12.8	6	843

3-11-09
REGISTERED CIVIL ENGINEER DATE

3-23-09
PLANS APPROVAL DATE

REGISTERED PROFESSIONAL ENGINEER M.B.SULLIVAN No. C65245 Exp. 9/30/09 CIVIL STATE OF CALIFORNIA

THE STATE OF CALIFORNIA OR ITS OFFICERS OR AGENTS SHALL NOT BE RESPONSIBLE FOR THE ACCURACY OR COMPLETENESS OF ELECTRONIC COPIES OF THIS PLAN SHEET.

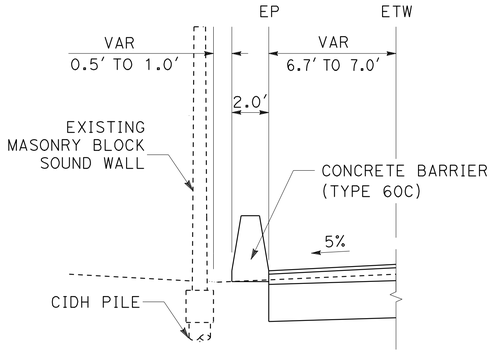

CONCRETE BARRIER (TYPE 60C)

STA "A1" 660+00.00 TO 663+00.00

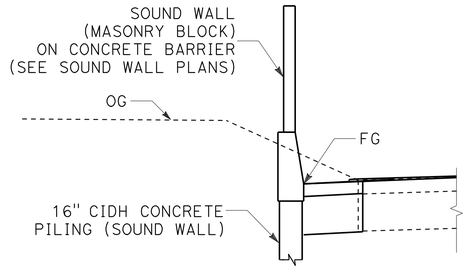

SOUND WALL

STA "A1" 668+21.80 TO 681+65.80
STA "A1" 707+34.42 TO 708+69.71

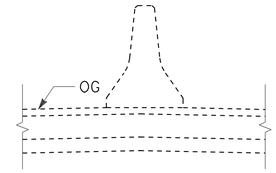

REMOVE CONCRETE BARRIER (TYPE 50)

STA "A1" 663+40.00 TO 634+35.00
STA "A1" 636+50.00 TO 638+10.00
STA "A1" 642+83.00 TO 643+60.00
STA "A1" 735+05.00 TO 738+05.00
STA "A1" 741+37.30 TO 744+55.00
STA "A1" 746+87.00 TO 749+55.00
STA "A1" 752+87.00 TO 755+22.00

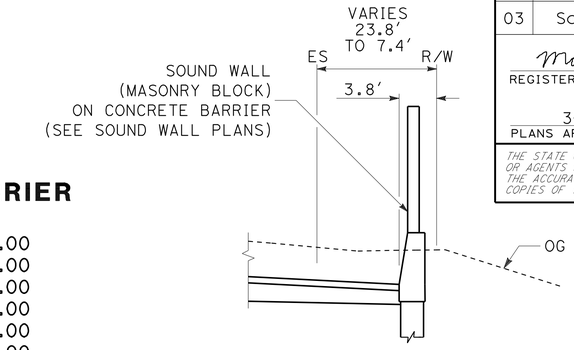

SOUND WALL

STA "A1" 663+36.24 TO 680+04.06

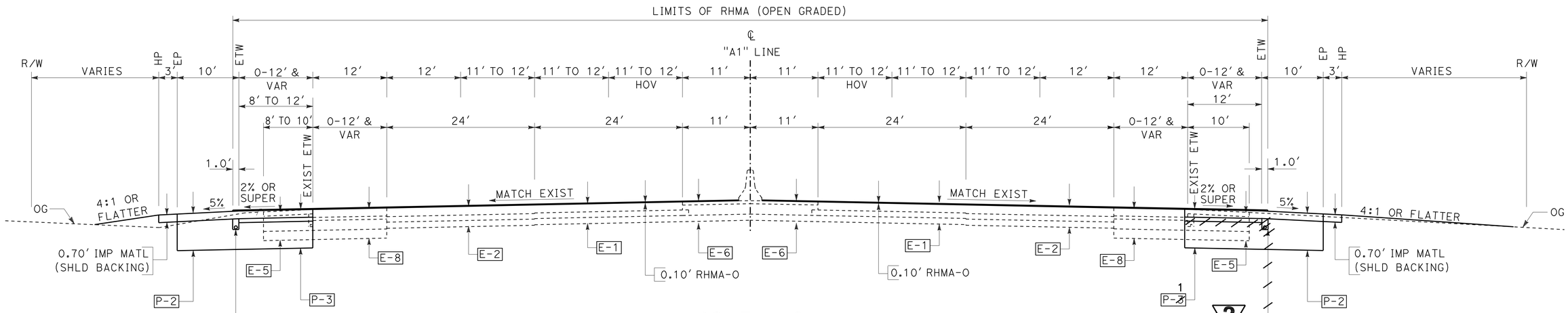

ROUTE 50

STA "A1" 692+45.50 TO 720+72.56

STA "A1" 690+06.20 TO 725+92.56

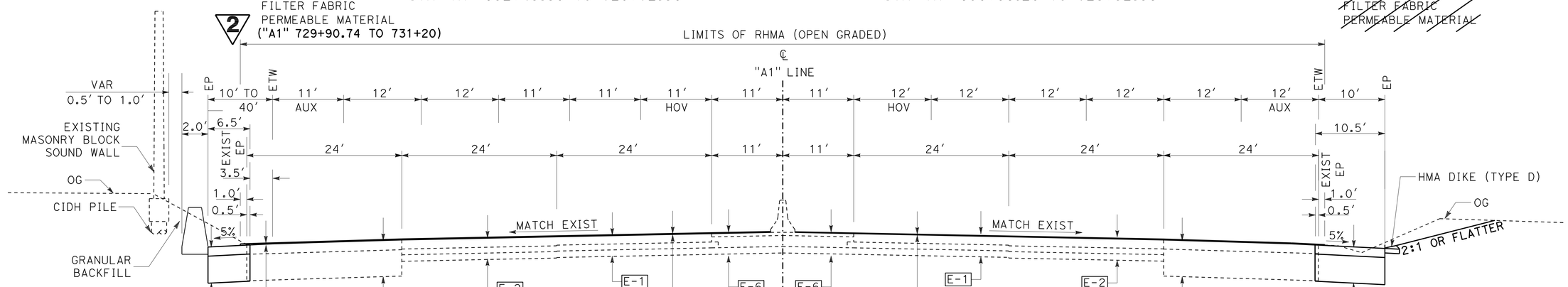

ROUTE 50

*STA "A1" 655+37.17 TO 668+21.80
STA "A1" 681+65.80 TO 707+42.39

STA "A1" 655+14.00 TO 707+42.40

STA "A1" 656+84.00 TO 690+06.20

2 REVISED PER ADDENDUM No. 2 DATED AUGUST 7, 2009

TYPICAL CROSS SECTIONS

NO SCALE

X-5

REVISED BY	DATE REVISED

CALCULATED-DESIGNED BY: JOHN MARTIN
CHECKED BY: MICHAEL SULLIVAN
FUNCTIONAL SUPERVISOR: JOHN MARTIN

STATE OF CALIFORNIA - DEPARTMENT OF TRANSPORTATION
Caltrans
DESIGN

V:\ProjectPlans\PSEWorking\d3\03-441611-add\344161ca005.add

LAST REVISION 03-13-09
DATE PLOTTED => 05-AUG-2009
TIME PLOTTED => 14:00

Dist	COUNTY	ROUTE	POST MILES TOTAL PROJECT	SHEET No.	TOTAL SHEETS
03	Sac	50	R5.3/12.8	9	843

REGISTERED CIVIL ENGINEER DATE 3-11-09

PLANS APPROVAL DATE 3-23-09

REGISTERED PROFESSIONAL ENGINEER M.B.SULLIVAN No. C65245 Exp. 9/30/09 CIVIL STATE OF CALIFORNIA

THE STATE OF CALIFORNIA OR ITS OFFICERS OR AGENTS SHALL NOT BE RESPONSIBLE FOR THE ACCURACY OR COMPLETENESS OF ELECTRONIC COPIES OF THIS PLAN SHEET.

2

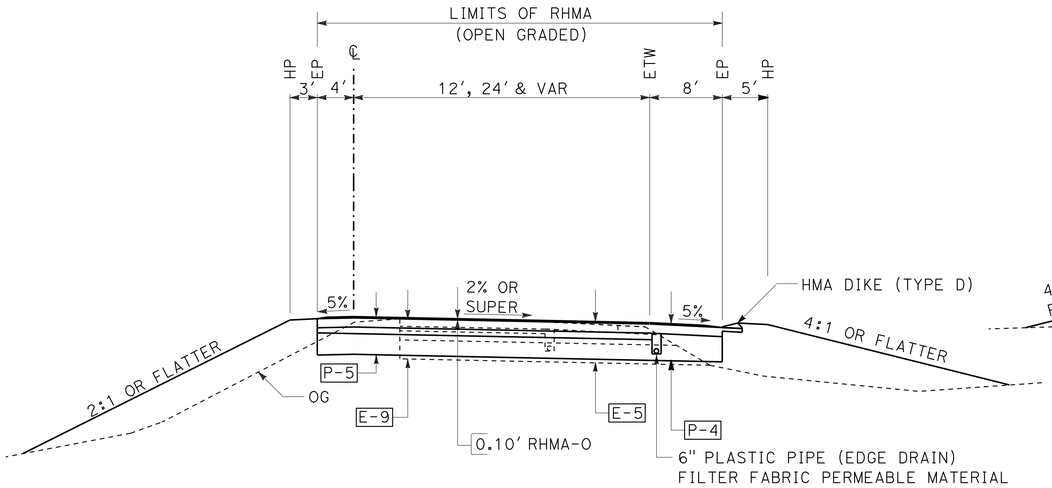

ZINFANDEL ROAD EB ON-RAMP FROM NB

STA "Z4" 14+37.71 TO 28+00.00

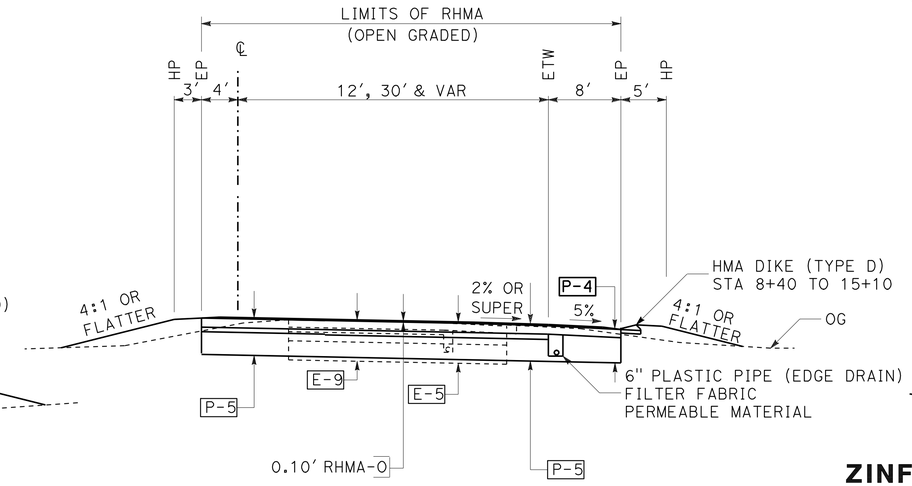

ZINFANDEL ROAD EB ON-RAMP FROM SB

STA "Z7" 7+27.64 TO 18+09.82

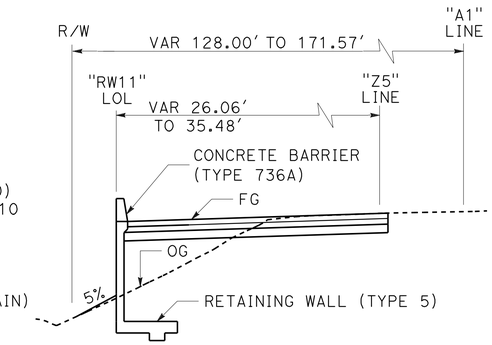

ZINFANDEL ROAD WB OFF-RAMP

STA "Z5" 23+75.00 TO 26+27.56

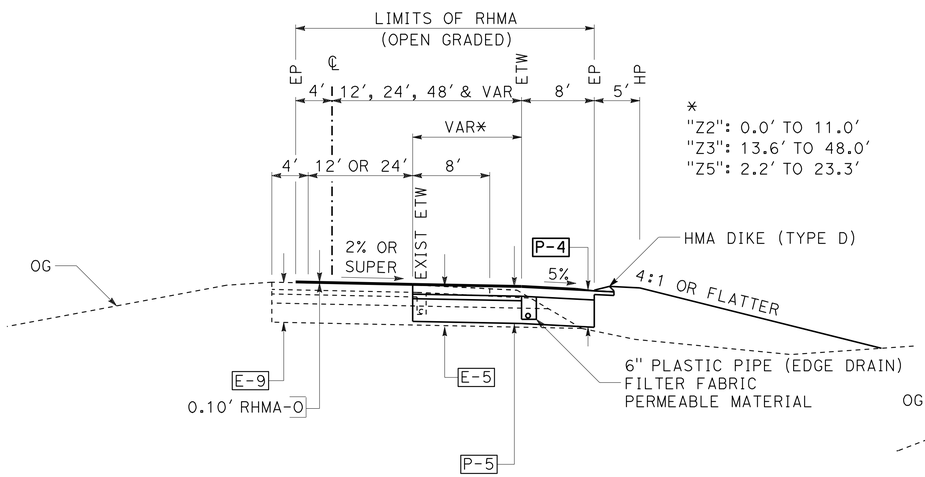

ZINFANDEL ROAD WB ON-RAMP FROM SB
ZINFANDEL ROAD EB OFF-RAMP
ZINFANDEL ROAD WB OFF-RAMP

STA "Z2" 8+69.71 TO 17+88.14
STA "Z3" 4+30.60 TO 12+50.00

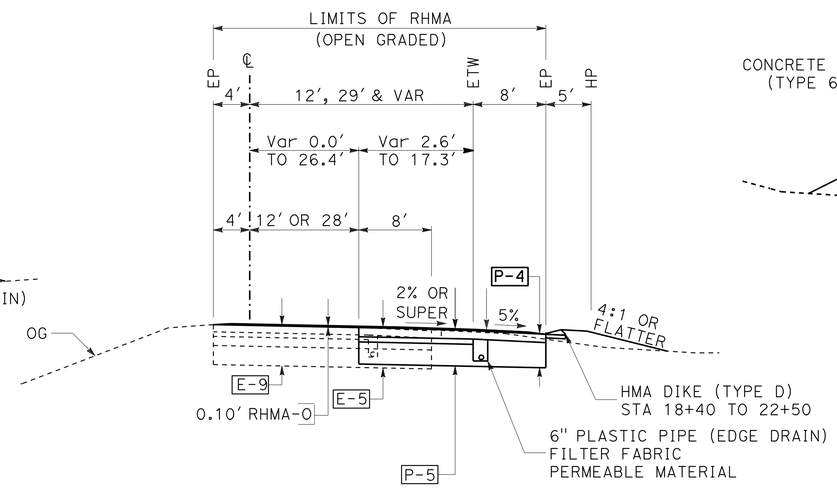

ZINFANDEL ROAD WB ON-RAMP FROM NB

STA "Z6" 15+78.20 TO 22+50.00

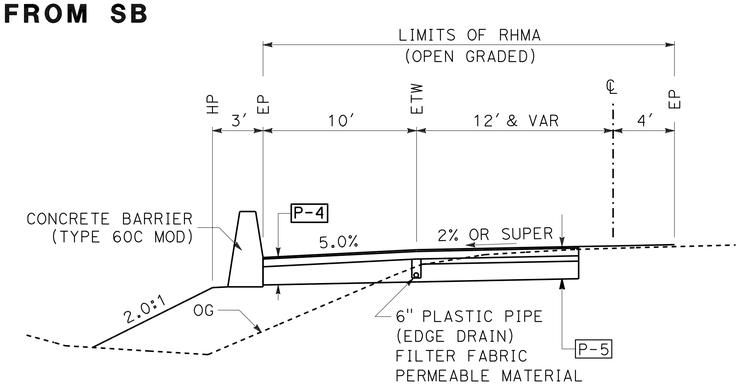

ZINFANDEL ROAD WB OFF-RAMP

STA "Z5" 22+09.54 TO 23+75.00
STA "Z5" 26+27.56 TO 29+90.74

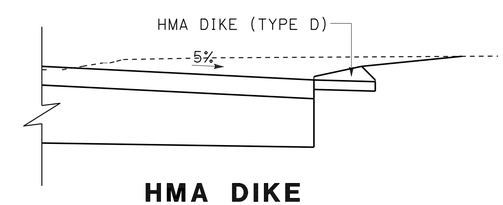

HMA DIKE

STA "Z3" 7+80.00 TO 9+78.00

2 **REVISED PER ADDENDUM No. 2 DATED AUGUST 7, 2009**

TYPICAL CROSS SECTIONS

NO SCALE

X-8

REVISED BY | DATE REVISED
THOMAS PENICK | MICHAEL SULLIVAN
CALCULATED-DESIGNED BY | CHECKED BY
FUNCTIONAL SUPERVISOR | JOHN MARTIN

STATE OF CALIFORNIA - DEPARTMENT OF TRANSPORTATION
Caltrans **DESIGN**

V:\ProjectPlans\PSEWorking\d3\03-441611-add\344161ca008.add

LAST REVISION 03-13-09 | DATE PLOTTED => 05-AUG-2009 | TIME PLOTTED => 14:00

NOTE: FOR COMPLETE RIGHT OF WAY AND ACCURATE ACCESS DATA, SEE RIGHT OF WAY RECORD MAPS AT DISTRICT OFFICE.

Dist	COUNTY	ROUTE	POST MILES TOTAL PROJECT	SHEET No.	TOTAL SHEETS
03	Sac	50	R5.3/12.8	13	843

6-19-09
REGISTERED CIVIL ENGINEER DATE

3-23-09
PLANS APPROVAL DATE

REGISTERED PROFESSIONAL ENGINEER M.B.SULLIVAN No. C65245 Exp. 9/30/09 CIVIL STATE OF CALIFORNIA

THE STATE OF CALIFORNIA OR ITS OFFICERS OR AGENTS SHALL NOT BE RESPONSIBLE FOR THE ACCURACY OR COMPLETENESS OF ELECTRONIC COPIES OF THIS PLAN SHEET.

2

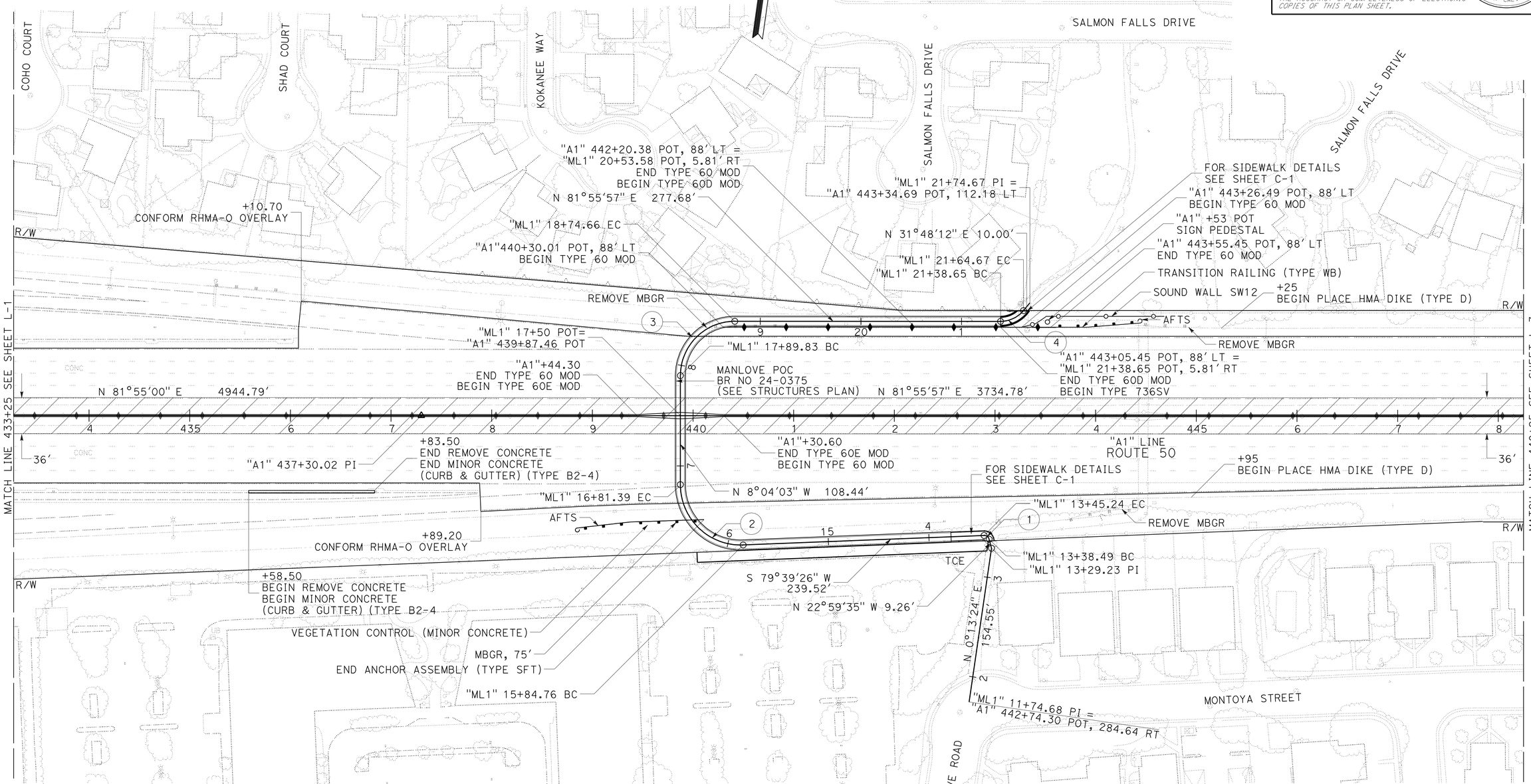

CURVE DATA

○	R	Δ	T	L
1	5.00	77°20'59"	4.00	6.75
2	60.00	92°16'31"	62.43	96.63
3	54.00	90°00'00"	54.00	84.82
4	29.74	50°07'46"	13.91	26.02

2 **REVISED PER ADDENDUM No. 2 DATED AUGUST 7, 2009**

LAYOUT
SCALE: 1" = 50'

L-2

REVISED BY | DATE REVISED
MICHAEL SULLIVAN | JOHN MARTIN
CALCULATED-DESIGNED BY | CHECKED BY
FUNCTIONAL SUPERVISOR: JOHN MARTIN

STATE OF CALIFORNIA - DEPARTMENT OF TRANSPORTATION
Caltrans
DESIGN

344161ea002.add

LAST REVISION | DATE PLOTTED => 05-AUG-2009 | TIME PLOTTED => 14:01
06-19-09

Dist	COUNTY	ROUTE	POST MILES TOTAL PROJECT	SHEET No.	TOTAL SHEETS
03	Sac	50	R5.3/12.8	27	843

REGISTERED CIVIL ENGINEER DATE 3-11-09

PLANS APPROVAL DATE 3-23-09

REGISTERED PROFESSIONAL ENGINEER M.B.SULLIVAN No. C65245 Exp. 9/30/09 CIVIL STATE OF CALIFORNIA

THE STATE OF CALIFORNIA OR ITS OFFICERS OR AGENTS SHALL NOT BE RESPONSIBLE FOR THE ACCURACY OR COMPLETENESS OF ELECTRONIC COPIES OF THIS PLAN SHEET.

NOTE: 1. FOR COMPLETE RIGHT OF WAY AND ACCURATE ACCESS DATA, SEE RIGHT OF WAY RECORD MAPS AT DISTRICT OFFICE.

2. # = STA "A1" 675+20 BEGIN REMOVE CONCRETE BARRIER
BEGIN TRANSITION BARRIER TYPE 50
TO CONCRETE BARRIER TYPE 60E MOD

3. ## = STA "A1" 675+35
END TRANSITION BARRIER TYPE 50
TO CONCRETE BARRIER TYPE 60E MOD

4. ### = STA "A1" 676+29 BEGIN TRANSITION BARRIER TYPE 60E MOD
TO CONCRETE BARRIER TYPE 50

5. #### =STA "A1" 676+44 END REMOVE CONCRETE BARRIER
END TRANSITION BARRIER TYPE 60E MOD
TO CONCRETE BARRIER TYPE 50

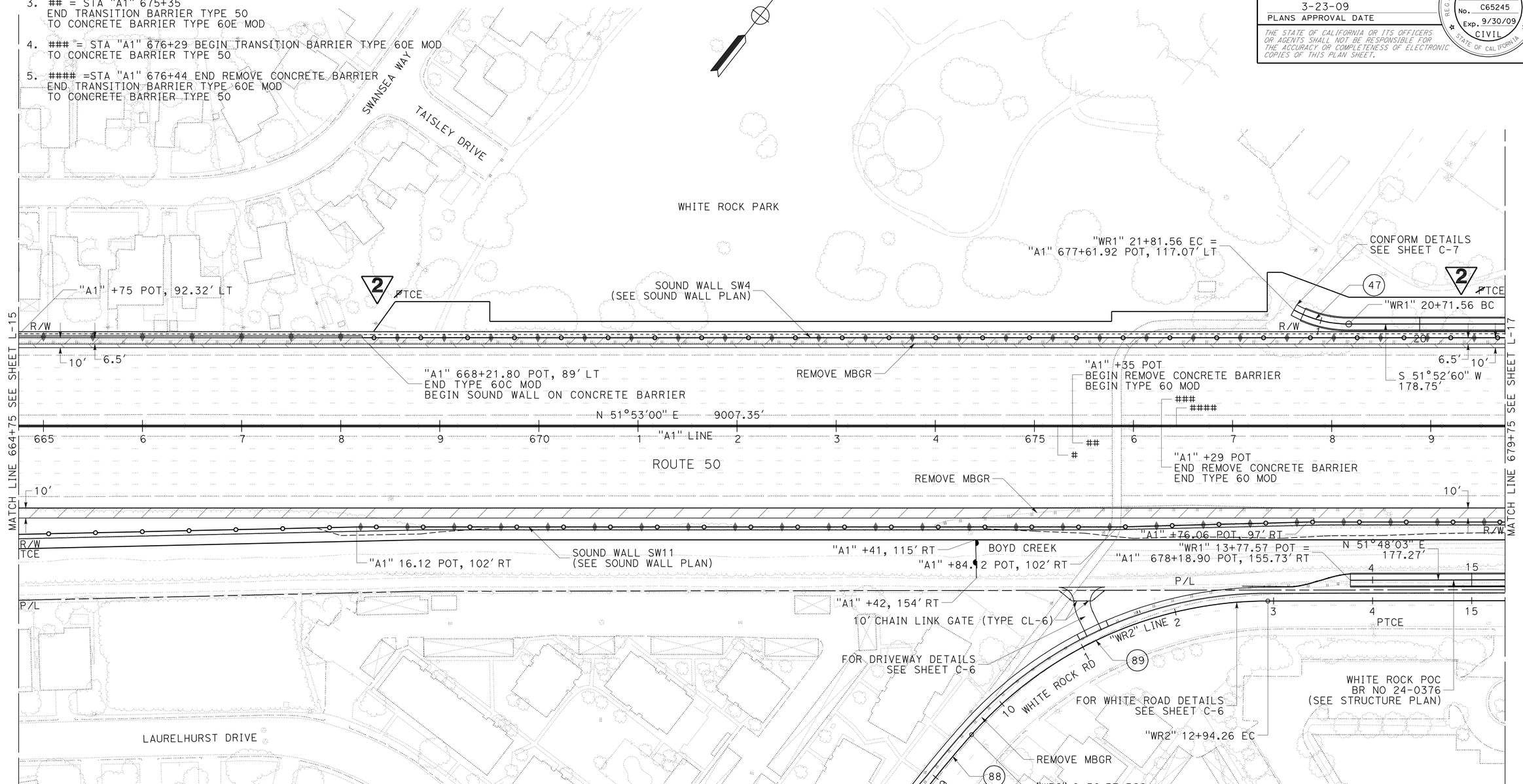

CURVE DATA

○	R	Δ	T	L
47	115.00	54°48'17"	59.62	110.00
88	1176.37	04°01'48"	41.39	82.74
89	400.00	48°23'58"	179.77	337.89

2 REVISED PER ADDENDUM No. 2 DATED AUGUST 7, 2009

LAYOUT
SCALE: 1" = 50'

L-16

REVISED BY | DATE REVISED
MICHAEL SULLIVAN | JOHN MARTIN
CALCULATED-DESIGNED BY | CHECKED BY
FUNCTIONAL SUPERVISOR: JOHN MARTIN

STATE OF CALIFORNIA - DEPARTMENT OF TRANSPORTATION
Caltrans
DESIGN

344161ea016.add

LAST REVISION 03-13-09 | DATE PLOTTED => 05-AUG-2009 | TIME PLOTTED => 14:01

BORDER LAST REVISED 3/1/2007 | RELATIVE BORDER SCALE IS IN INCHES 0 1 2 3 | USERNAME => trmikesl | DGN FILE => 344161ea016.add | CU 03 240 | EA 441611

Dist	COUNTY	ROUTE	POST MILES TOTAL PROJECT	SHEET No.	TOTAL SHEETS
03	Sac	50	R5.3/12.8	70	843

REGISTERED CIVIL ENGINEER DATE 6-19-09

PLANS APPROVAL DATE 3-23-09

REGISTERED PROFESSIONAL ENGINEER M.B.SULLIVAN No. C65245 Exp. 9/30/09 CIVIL STATE OF CALIFORNIA

THE STATE OF CALIFORNIA OR ITS OFFICERS OR AGENTS SHALL NOT BE RESPONSIBLE FOR THE ACCURACY OR COMPLETENESS OF ELECTRONIC COPIES OF THIS PLAN SHEET.

NOTES:

1. FOR COMPLETE RIGHT OF WAY AND ACCURATE ACCESS DATA, SEE RIGHT OF WAY RECORD MAPS AT DISTRICT OFFICE.
2. FOR PICKET FENCE DETAILS SEE BRIDGE PLANS.
3. FOR HMA RAMP DETAILS SEE C-7.
4. ALL OFFSETS ON THIS SHEET ARE TO EDGE OF SIDEWALK.
5. SIDEWALK CROSS SLOPE 2% MAXIMUM.
6. SEE SHEET C-2 FOR CURB DETAILS
7. SEE SHEET C-11 FOR MODIFIED BARRIER DETAILS

CURVE DATA

○	R	Δ	T	L
82	1.00	77°20'59"		1.35
83	9.00	77°20'59"	7.20	12.15
84	29.74	50°07'46"	13.91	26.02

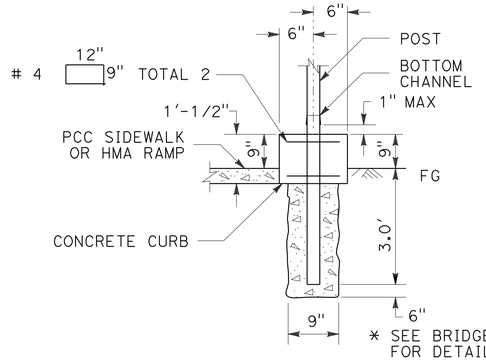

* SEE BRIDGE PLANS AND STD PLANS FOR DETAILS NOT SHOWN

PICKET FENCE POST POCKET (EARTH)

NO SCALE

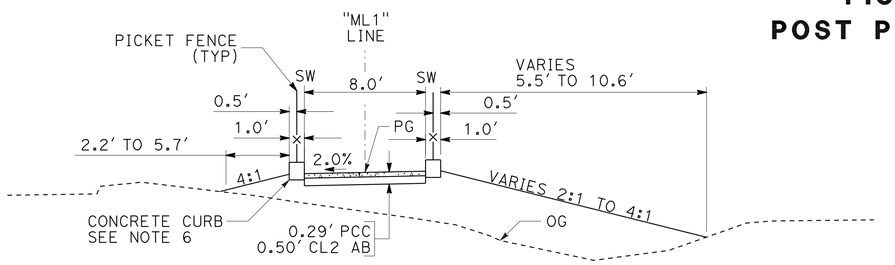

SIDEWALK SECTION A-A

SCALE: 1" = 5'

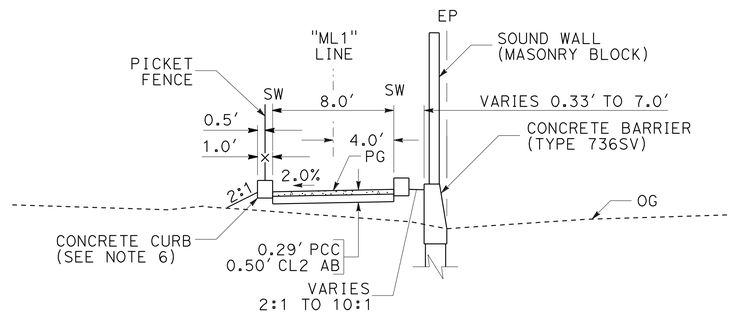

SIDEWALK SECTION B-B

SCALE: 1" = 5'

"ML1" EDGE OF SIDEWALK TABLE

NUMBER	STATION	OFFSET	ELEVATION	DESCRIPTION
1	13+78.06	4.0 LT	45.18	SIDEWALK
2	13+73.06	4.0 LT	45.09	POT
3	13+45.24	4.0 LT	44.05	EC
4	13+37.24	4.0 LT	44.05	SIDEWALK
5	13+35.44	4.0 RT	44.21	SIDEWALK
6	13+38.49	4.0 RT	44.21	BC
7	13+41.87	4.0 RT	44.21	1/4 DELTA PT
8	13+45.24	4.0 RT	44.21	EC
9	13+68.06	4.0 RT	45.06	POT
10	13+73.06	4.0 RT	45.16	GB/POT
11	13+78.06	4.0 RT	45.18	GB/SIDEWALK
15	21+38.65	4.0 RT	44.18	END PED OC/BC
16	21+43.65	4.0 RT	44.10	POC
17	21+47.65	4.0 RT	44.07	POC
18	21+54.10	4.0 RT	43.90	POC
19	21+60.55	4.0 RT	43.73	POC
20	21+64.67	4.0 RT	43.19	POC
21	21+67.49	4.0 RT	43.19	END SIDEWALK
22	21+64.67	4.0 LT	43.03	END SIDEWALK
23	21+54.10	4.0 LT	43.39	POC
24	21+47.65	4.0 LT	43.35	POC
25	21+43.65	4.0 LT	43.31	POC
26	21+38.65	4.0 LT	44.18	END PED OC/BC

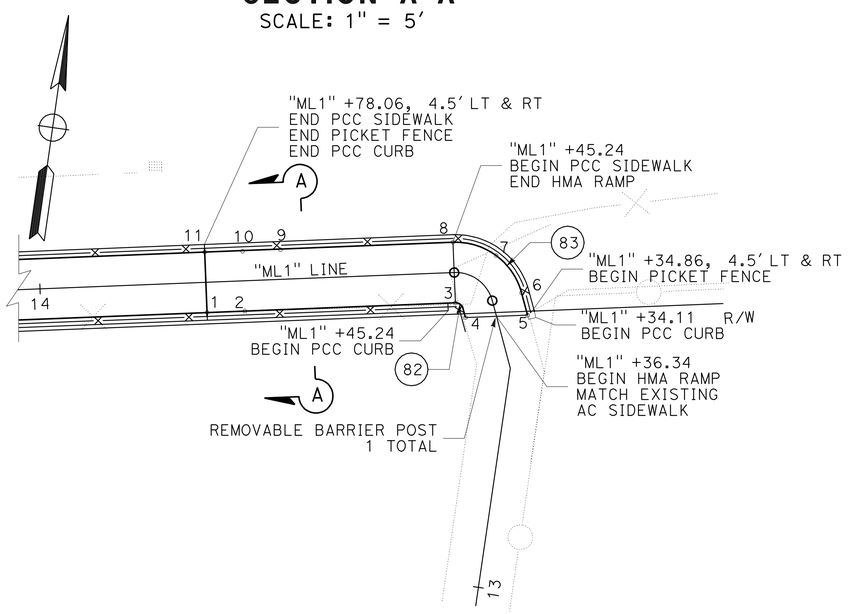

MANLOVE POC SIDEWALK DETAIL 1

SCALE: 1" = 10'

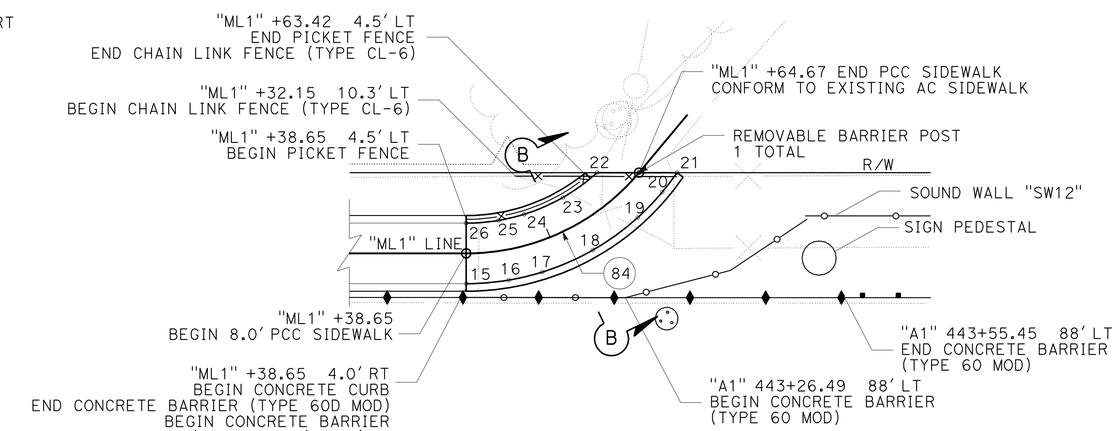

MANLOVE POC SIDEWALK DETAIL 2

SCALE: 1" = 10'

2 REVISED PER ADDENDUM No. 2 DATED AUGUST 7, 2009

CONSTRUCTION DETAILS

SCALE: AS SHOWN

C-1

REVISED BY | DATE REVISED

JIM RASMUSSEN | MICHAEL SULLIVAN

CALCULATED-DESIGNED BY | CHECKED BY

FUNCTIONAL SUPERVISOR: JOHN MARTIN

STATE OF CALIFORNIA - DEPARTMENT OF TRANSPORTATION

DESIGN

344161ga001.add

LAST REVISION 06-16-09 | DATE PLOTTED => 05-AUG-2009 | TIME PLOTTED => 14:01

Dist	COUNTY	ROUTE	POST MILES TOTAL PROJECT	SHEET No.	TOTAL SHEETS
03	Sac	50	R5.3/12.8	71	843

6-19-09
REGISTERED CIVIL ENGINEER DATE

3-23-09
PLANS APPROVAL DATE

REGISTERED PROFESSIONAL ENGINEER M.B.SULLIVAN No. C65245 Exp. 9/30/09 CIVIL STATE OF CALIFORNIA

2

THE STATE OF CALIFORNIA OR ITS OFFICERS OR AGENTS SHALL NOT BE RESPONSIBLE FOR THE ACCURACY OR COMPLETENESS OF ELECTRONIC COPIES OF THIS PLAN SHEET.

NOTES:

1. FOR COMPLETE RIGHT OF WAY AND ACCURATE ACCESS DATA, SEE RIGHT OF WAY RECORD MAPS AT DISTRICT OFFICE.
2. FOR PICKET FENCE DETAILS SEE BRIDGE PLANS.
3. SIDEWALK CROSS SLOPE 2% MAXIMUM.

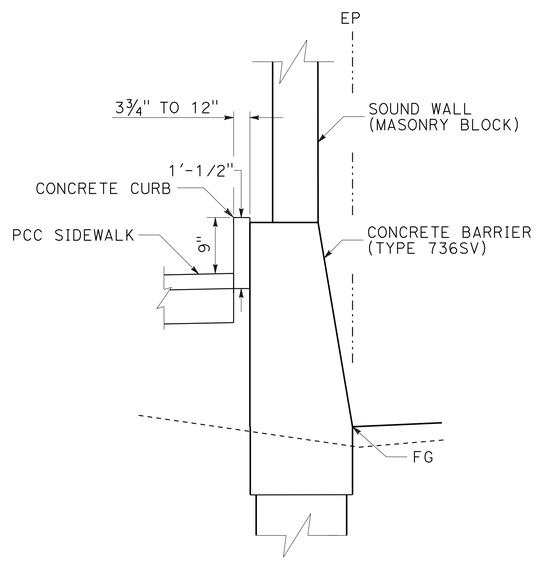

SECTION A-A
"ML1" 21+38.65 TO "ML1" 21+45.53

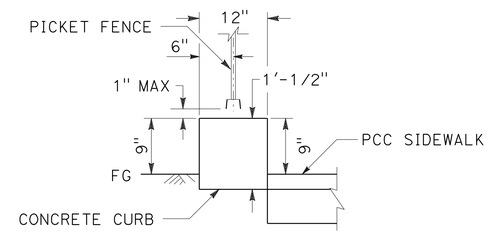

SECTION B-B
"ML1" 21+38.65 TO "ML1" 21+66.31

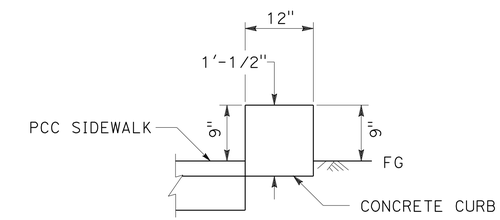

SECTION C-C
"ML1" 21+45.53 TO "ML1" 21+67.49

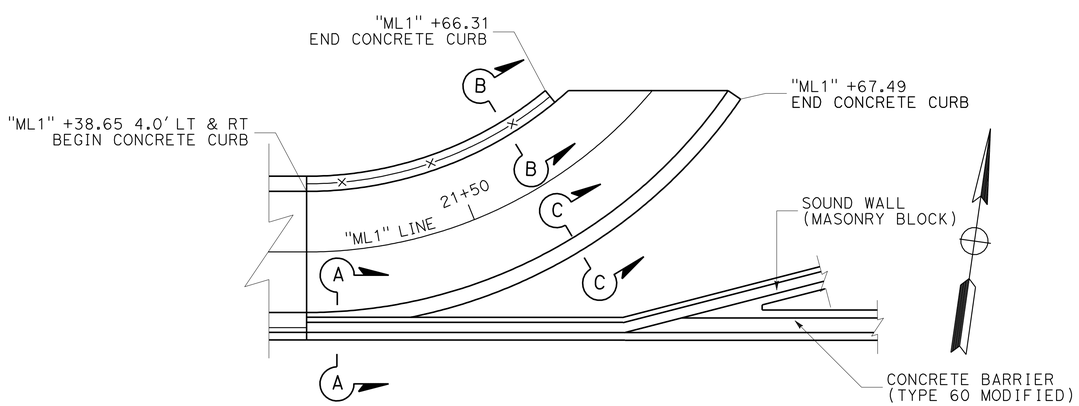

MANLOVE POC SIDEWALK CONCRETE CURB DETAIL 3
"ML1" 21+38.65 TO "ML1" 21+67.49

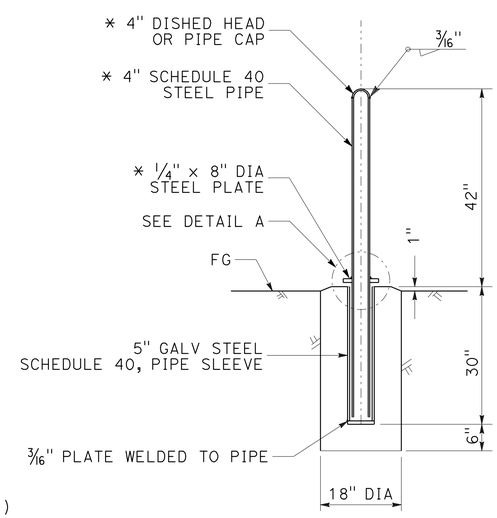

* HOT DIPPED GALV AFTER FABRICATION

REMOVABLE BARRIER POST
"ML1" 13+36.34
"ML1" 21+64.67
"WR1" 13+77.65
"WR1" 21+19.00

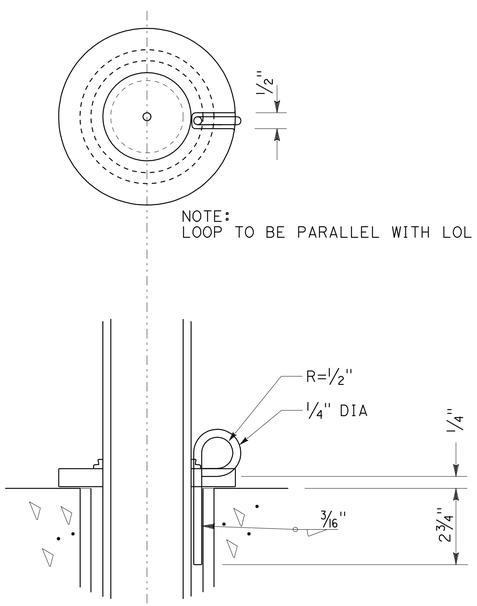

DETAIL A

2 **REVISED PER ADDENDUM No. 2 DATED AUGUST 7, 2009**

CONSTRUCTION DETAILS
NO SCALE

C-2

REVISED BY	DATE REVISED
JIM RASMUSSEN	MICHAEL SULLIVAN

CALCULATED-DESIGNED BY / CHECKED BY

FUNCTIONAL SUPERVISOR: JOHN MARTIN

STATE OF CALIFORNIA - DEPARTMENT OF TRANSPORTATION
Caltrans
DESIGN

344161ga002.add

LAST REVISION 06-22-09 | DATE PLOTTED => 05-AUG-2009 | TIME PLOTTED => 14:02

BORDER LAST REVISED 3/1/2007 | RELATIVE BORDER SCALE IS IN INCHES 0 1 2 3 | USERNAME => trmikesl | DGN FILE => 344161ga002.add | CU 03 240 | EA 441611

Dist	COUNTY	ROUTE	POST MILES TOTAL PROJECT	SHEET No.	TOTAL SHEETS
03	Sac	50	R5.3/12.8	85	843

REGISTERED CIVIL ENGINEER DATE 3-11-09

PLANS APPROVAL DATE 3-23-09

REGISTERED PROFESSIONAL ENGINEER M.B.SULLIVAN No. C65245 Exp. 9/30/09 CIVIL STATE OF CALIFORNIA

THE STATE OF CALIFORNIA OR ITS OFFICERS OR AGENTS SHALL NOT BE RESPONSIBLE FOR THE ACCURACY OR COMPLETENESS OF ELECTRONIC COPIES OF THIS PLAN SHEET.

NOTES:

1. USE TYPE 5 STRUCTURAL SECTION DRAINAGE SYSTEM
2. SEE DRAINAGE PROFILES FOR FLOW LINE ELEVATIONS AT DRAINAGE INLETS AND FLARED END SECTIONS.

LEGEND

+00 V O C 20 20	STATION VENT/OUTLET TYPE C LENGTH FOR VENT/OUTLET
+00 V O DI 6 6	STATION VENT/OUTLET CONNECT TO DRAINAGE INLET, SEE NOTE 2 LENGTH
+00 V O FES 6 6	STATION VENT/OUTLET CONNECT TO FLARED END SECTION, SEE NOTE 2 LENGTH
+00 V O A 6 6	STATION VENT/OUTLET TYPE A MOD LENGTH

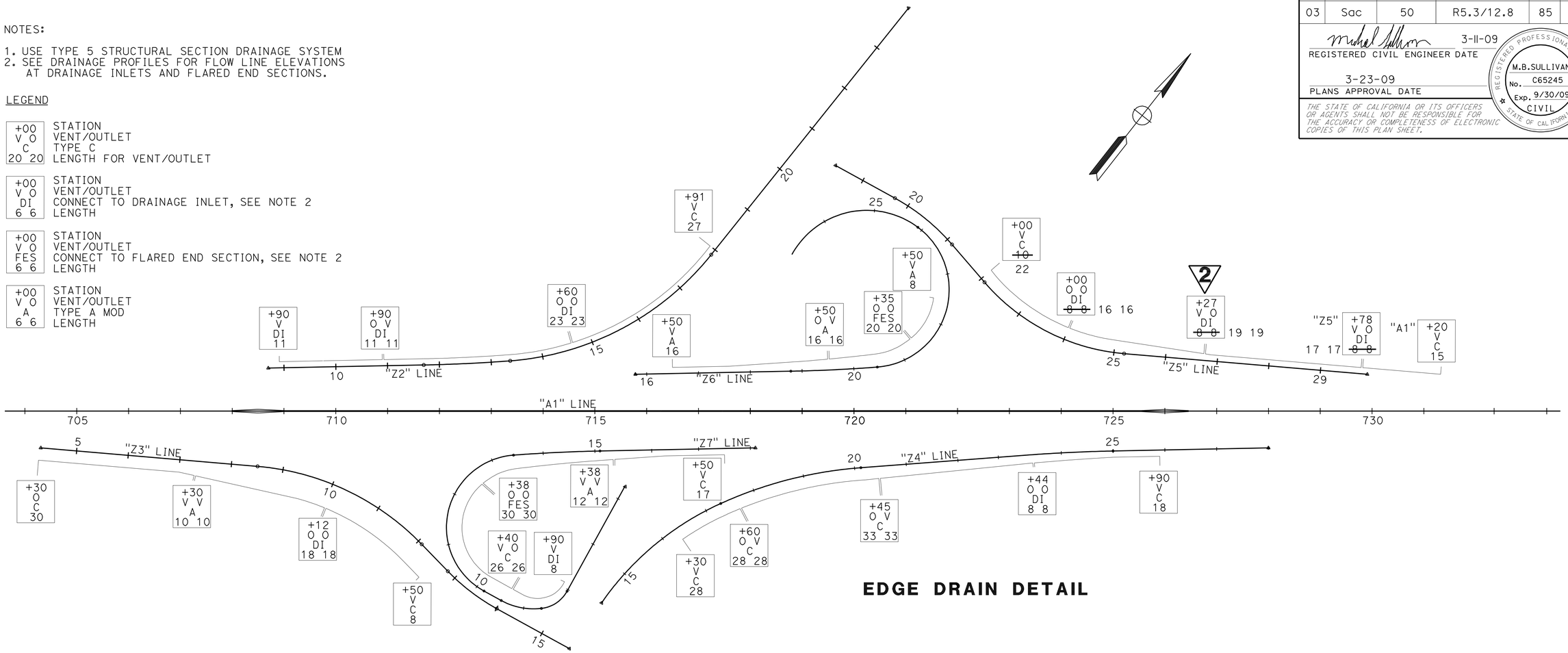

EDGE DRAIN DETAIL

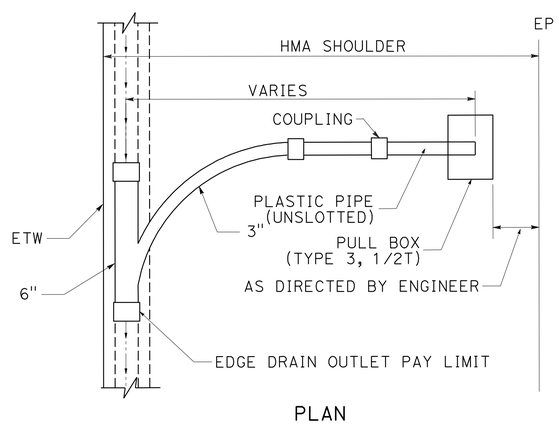

PLAN

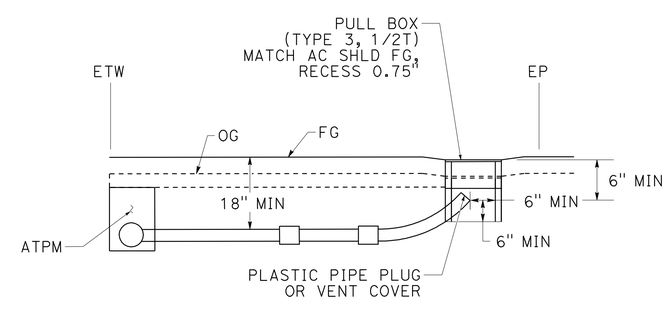

ELEVATION

TYPE A MODIFY EDGE DRAIN CLEANOUT/VENT

2 **REVISED PER ADDENDUM No. 2 DATED AUGUST 7, 2009**

CONSTRUCTION DETAILS

SCALE: 1" = 100'

C-16

REVISED BY | DATE REVISED

TED MCDONALD | MICHAEL SULLIVAN

CALCULATED-DESIGNED BY | CHECKED BY

FUNCTIONAL SUPERVISOR: JOHN MARTIN

STATE OF CALIFORNIA - DEPARTMENT OF TRANSPORTATION

Caltrans DESIGN

344161ga016.add

LAST REVISION 03-18-09 | DATE PLOTTED => 05-AUG-2009 | TIME PLOTTED => 14:02

Dist	COUNTY	ROUTE	POST MILES TOTAL PROJECT	SHEET No.	TOTAL SHEETS
03	Sac	50	R5.3/12.8	104	843

12-26-08
REGISTERED CIVIL ENGINEER DATE

3-23-09
PLANS APPROVAL DATE

REGISTERED PROFESSIONAL ENGINEER
CHRIS S. GAIDO
No. C62535
Exp. 12-31-09
CIVIL
STATE OF CALIFORNIA

THE STATE OF CALIFORNIA OR ITS OFFICERS OR AGENTS SHALL NOT BE RESPONSIBLE FOR THE ACCURACY OR COMPLETENESS OF ELECTRONIC COPIES OF THIS PLAN SHEET.

NOTE:

1. FOR COMPLETE RIGHT OF WAY AND ACCURATE ACCESS DATA SEE RIGHT OF WAY RECORD MAPS AT THE DISTRICT OFFICE.

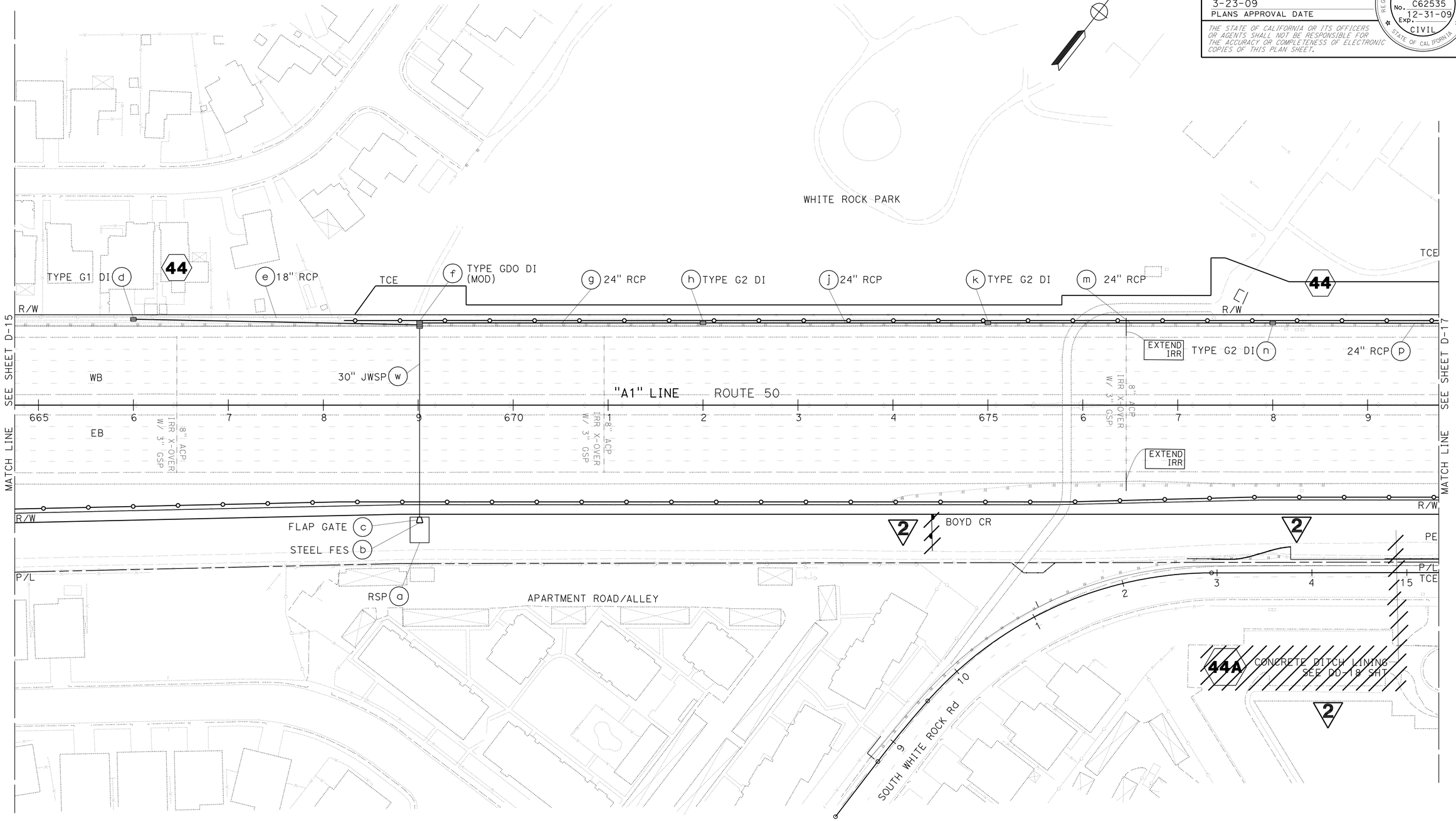

2 **REVISED PER ADDENDUM No. 2 DATED AUGUST 7, 2009**

THIS PLAN ACCURATE FOR DRAINAGE WORK ONLY

DRAINAGE PLAN

SCALE: 1" = 50'

D-16

REVISED BY	DATE REVISED

CHRIS GAIDO — CALCULATED-DESIGNED BY — CHECKED BY

FUNCTIONAL SUPERVISOR: JOHN MARTIN

STATE OF CALIFORNIA - DEPARTMENT OF TRANSPORTATION

Caltrans **DESIGN**

LAST REVISION 12-29-08 — DATE PLOTTED => 05-AUG-2009 — TIME PLOTTED => 14:02

344161ia016.add

Dist	COUNTY	ROUTE	POST MILES TOTAL PROJECT	SHEET No.	TOTAL SHEETS
03	Sac	50	R5.3/12.8	105	843

12-26-08
REGISTERED CIVIL ENGINEER DATE

3-23-09
PLANS APPROVAL DATE

REGISTERED PROFESSIONAL ENGINEER CHRIS S. GAIDO No. C62535 Exp. 12-31-09 CIVIL STATE OF CALIFORNIA

THE STATE OF CALIFORNIA OR ITS OFFICERS OR AGENTS SHALL NOT BE RESPONSIBLE FOR THE ACCURACY OR COMPLETENESS OF ELECTRONIC COPIES OF THIS PLAN SHEET.

NOTE:

1. FOR COMPLETE RIGHT OF WAY AND ACCURATE ACCESS DATA SEE RIGHT OF WAY RECORD MAPS AT THE DISTRICT OFFICE.

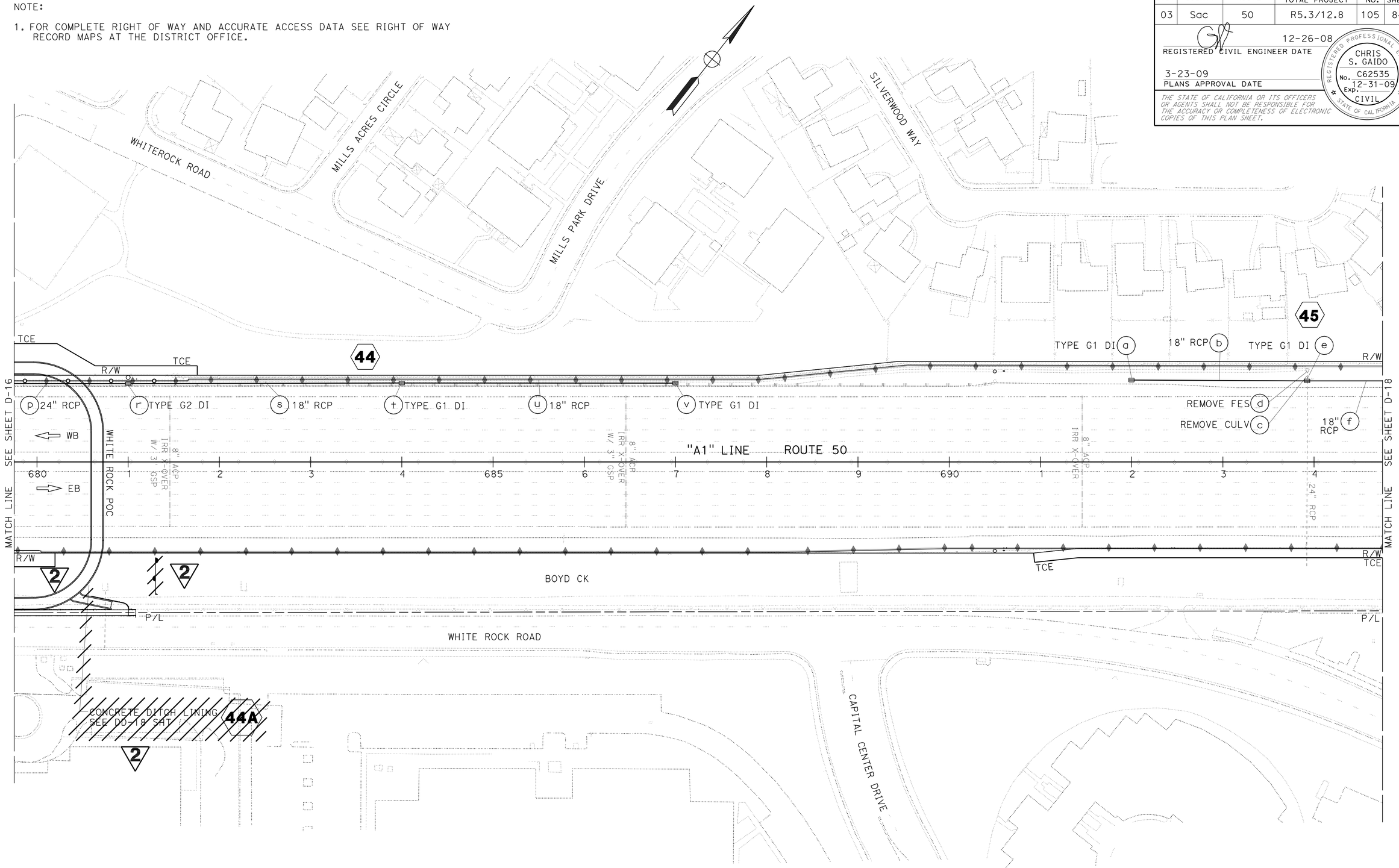

2 **REVISED PER ADDENDUM No. 2 DATED AUGUST 7, 2009**

THIS PLAN ACCURATE FOR DRAINAGE WORK ONLY

DRAINAGE PLAN

SCALE: 1" = 50'

D-17

CHRIS GAIDO	REVISED BY
JEFF CARSON	DATE REVISED
CALCULATED-DESIGNED BY	
CHECKED BY	
FUNCTIONAL SUPERVISOR	
JOHN MARTIN	

STATE OF CALIFORNIA - DEPARTMENT OF TRANSPORTATION
Caltrans
DESIGN

LAST REVISION 12-29-08 | DATE PLOTTED => 05-AUG-2009 | TIME PLOTTED => 14:02

3441611ia017.add

Dist	COUNTY	ROUTE	POST MILES TOTAL PROJECT	SHEET No.	TOTAL SHEETS
03	Sac	50	R5.3/12.8	160	843

12-26-08
REGISTERED CIVIL ENGINEER DATE

3-23-09
PLANS APPROVAL DATE

REGISTERED PROFESSIONAL ENGINEER
CHRIS S. GAIDO
No. C62535
Exp. 12-31-09
CIVIL
STATE OF CALIFORNIA

THE STATE OF CALIFORNIA OR ITS OFFICERS OR AGENTS SHALL NOT BE RESPONSIBLE FOR THE ACCURACY OR COMPLETENESS OF ELECTRONIC COPIES OF THIS PLAN SHEET.

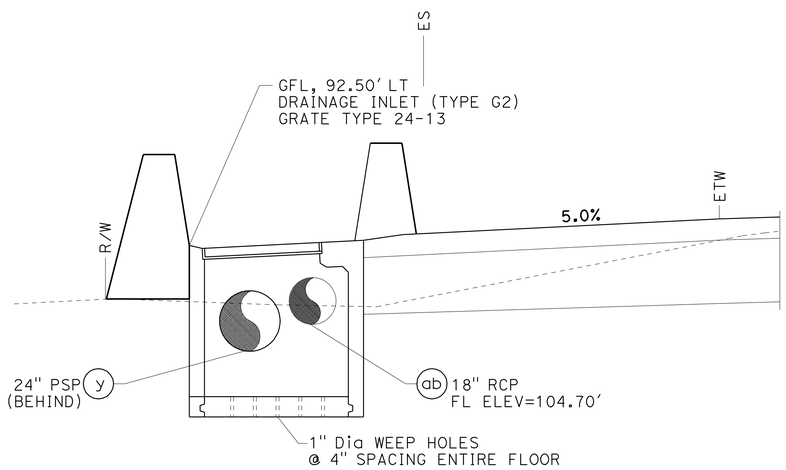

"A1" STA 750+00.00, 92.50' LT

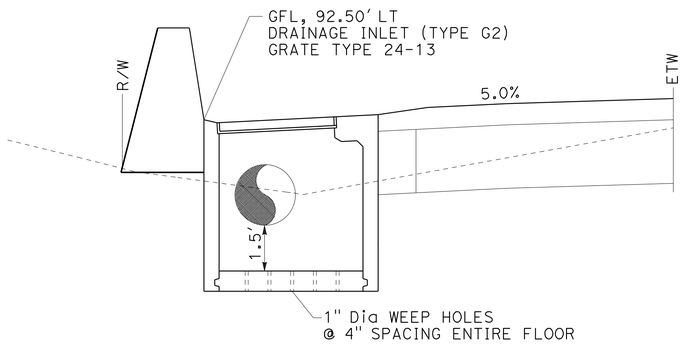

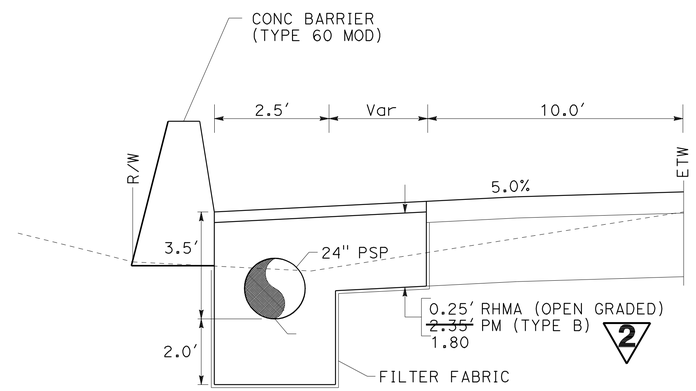

TYPICAL SECTION
"A1" STA 732+00.00, 92.50' LT
TO "A1" STA 750+00.00, 92.50' LT

DRAINAGE SYSTEM NO. 49
PERMEABLE SHOULDER

2 **REVISED PER ADDENDUM No. 2 DATED AUGUST 7, 2009**

THIS PLAN ACCURATE FOR DRAINAGE WORK ONLY

DRAINAGE DETAILS
NO SCALE
DD-22

STATE OF CALIFORNIA - DEPARTMENT OF TRANSPORTATION
Caltrans
DESIGN

FUNCTIONAL SUPERVISOR: JOHN MARTIN
CALCULATED-DESIGNED BY: JEFF CARSON
CHECKED BY: CHRIS GAIDO
REVISED BY
DATE REVISED

LAST REVISION 10-09-08
DATE PLOTTED => 05-AUG-2009
TIME PLOTTED => 14:02

Dist	COUNTY	ROUTE	POST MILES TOTAL PROJECT	SHEET No.	TOTAL SHEETS
03	Sac	50	R5.3/12.8	185	843

12-26-08
REGISTERED CIVIL ENGINEER DATE

3-23-09
PLANS APPROVAL DATE

REGISTERED PROFESSIONAL ENGINEER
CHRIS S. GAIDO
No. C62535
Exp. 12-31-09
CIVIL
STATE OF CALIFORNIA

THE STATE OF CALIFORNIA OR ITS OFFICERS OR AGENTS SHALL NOT BE RESPONSIBLE FOR THE ACCURACY OR COMPLETENESS OF ELECTRONIC COPIES OF THIS PLAN SHEET.

NOTES:
1. (N) NOT A SEPARATE PAY ITEM, FOR INFORMATION ONLY.
2. ALL CULVERTS SHALL HAVE POSITIVE WATERTIGHT JOINTS.
3. ALL DOWNDRAINS SHALL HAVE DOWNDRAIN COUPLER.
4. ACP REQUIRES SPECIAL REMOVAL, HANDLING AND DISPOSAL. SEE SPECS.

DRAINAGE QUANTITIES

DRAINAGE PROFILE SHEET No.	DRAINAGE SYSTEM No. ⬡	DRAINAGE UNIT No. ○	FLUSH CULVERT	ABANDON CULVERT	REMOVE FLARED END SECTION	REMOVE ASPHALT CONCRETE DIKE	REMOVE OVERSIDE DRAIN	REMOVE CULVERT	REMOVE INLET	REMOVE DOWNDRAIN	REMOVE JUNCTION BOX	ADJUST INLET	MODIFY INLET	REMOVE CONCRETE	CAP INLET	STRUCTURAL BACKFILL (SLURRY CEMENT)	PERVIOUS DITCH LINING	SAND BACKFILL	DITCH EXCAVATION	ROCK BLANKET (TYPE 1)	ROCK BLANKET (TYPE 2)	HOT MIX ASPHALT (TYPE A)	(N) PLACE HOT MIX ASPHALT DIKE (TYPE D)	PLACE HOT MIX ASPHALT DIKE (TYPE F)	PLACE HOT MIX ASPHALT (MISCELLANEOUS AREA)	PRECAST CONCRETE BOX CULVERT	MINOR CONCRETE (MINOR STRUCTURE)	MINOR CONCRETE (BACKFILL)	30" REINFORCED CONCRETE PIPE (CLASS II)	36" REINFORCED CONCRETE PIPE (CLASS II)			ALIGNMENT	STATION	DESCRIPTION
			EA	EA	EA	LF	EA	EA	EA	EA	EA	EA	EA	CY	EA	CY	SQYD	CY	CY	SQYD	SQYD	TON	LF	LF	SQYD	LF	CY	CY	LF	LF					
DP-17	44	p														38.48																	A1	678+00	24" x 297.0' RCP + STRUCTURE BACKFILL
DP-17	44	r																									1.4						A1	681+00	TYPE G2 DI, W\ (1)GRATE TYPE 24-9,
DP-17	44	s														28.10																	A1	681+00	18" x 297.0' RCP + STRUCTURE BACKFILL
DP-17	44	t																									0.9						A1	684+00	TYPE G1 DI, W\ (1)GRATE TYPE 24-9,
DP-17	44	u														28.10																	A1	684+00	18" x 297.0' RCP + STRUCTURE BACKFILL
DP-17	44	v																									0.8						A1	687+00	TYPE G1 DI, W\ (1)GRATE TYPE 24-9,
DP-16	44	w																															A1	669+01	30" x 199.7' JWSP
~~DD-18~~	~~44A~~	~~a~~																	~~569.0~~														~~A1~~	~~676+50~~	~~DITCH EXCAVATION~~
~~DD-18~~	~~44A~~	~~b~~																									~~416.0~~						~~A1~~	~~676+50~~	~~MINOR CONC (MINOR STRUCTURE)~~
~~DD-18~~	~~44A~~	~~c~~																															~~A1~~	~~676+50~~	~~PERMEABLE MATERIAL (CLASS 1)~~
DP-17	45	a																									1.1						A1	692+00	TYPE G1 DI, W\ (1)GRATE TYPE 24-9,
DP-17	45	b																															A1	692+00	18" 190.7' RCP
DP-17	45	c						1																									A1	693+93	REMOVE 24" x 11.7' RCP
DP-17	45	d			1																												A1	693+93	REMOVE 24" FES
DP-17	45	e																									1.3						A1	693+93	TYPE G1 DI, W\ (1)GRATE TYPE 24-9,
DP-17	45	f																															A1	693+93	18" x 305.3' RCP
DP-17	45	g																									1.2						A1	697+00	TYPE G1 DI, W\ (1)GRATE TYPE 24-9,
DP-17	46	a																									1.8						A1	701+00	TYPE GDO DI, W\ (1)GRATE TYPE 12
DP-17	46	b																															A1	701+00	18" x 297.5' RCP
DP-17	46	c																									1.4						A1	704+00	TYPE G1 DI, W\ (1)GRATE TYPE 24-9,
DP-17	46	d																															A1	704+00	18" x 322.5' RCP
DP-17	46	e																									2.9						A1	707+25	TYPE GDO DI, W\ (1)GRATE TYPE 12
DP-17	46	f																															A1	707+25	18' x 6.0' RCP
DP-18	46A	a																									8.0						A1	707+35	MH
DP-18	46A	b						1																									A1	707+50	REMOVE 18" x8.0' RCP
DP-18	46A	c							1																								A1	707+50	REMOVE INLET
DP-18	46A	d																											350.1				A1	707+35	30" x 350.1' RCP
DP-18	46A	e			1																												A1	710+94	REMOVE 24" FES
DP-18	46A	f																									2.9						Z2	10+90	TYPE MOD GDO DI, W\ (1)GRATE TYPE 24-12,
DP-18	46A	g						1																									A1	710+94	REMOVE 24" x 269.0' HDPE
DP-18	46A	h														19.05													359.0				Z2	10+90	30" x 359.0' RCP & STRUCTURE BACKFILL
DP-18	46A	k			1																												Z2	14+50	REMOVE 24" FES
DP-18	46A	l																									1.8						Z2	14+60	TYPE MOD GDO DI, W\ (1)GRATE TYPE 24-12,
DP-18	46A	m														16.32													97.8				Z2	14+60	30" RCP
DP-18	46A	n																									1.5						Z2	15+68	TYPE G2 DI, W\ (1)GRATE TYPE 24-9,
DP-18	46A	o			1																												Z2	16+35	REMOVE 24" FES
DP-18	46A	p														2.20																	Z2	15+68	24" x 207.0' RCP & STRUCTURE BACKFILL
DP-18	46A	r							1																								Z2	17+36	REMOVE INLET (H = 3.00')
SHEET TOTAL					4			3	2							132.25			~~569.0~~								~~443.0~~ 27		806.9						

2 **REVISED PER ADDENDUM No. 2 DATED AUGUST 7, 2009**

THIS PLAN ACCURATE FOR DRAINAGE WORK ONLY

DRAINAGE QUANTITIES
DQ-21

REVISED BY | DATE REVISED
CHRIS GAIDO | TED MCDONALD
CALCULATED-DESIGNED BY | CHECKED BY
FUNCTIONAL SUPERVISOR: JOHN MARTIN
STATE OF CALIFORNIA - DEPARTMENT OF TRANSPORTATION
Caltrans DESIGN

LAST REVISION 03-17-09 | DATE PLOTTED => 05-AUG-2009 | TIME PLOTTED => 14:02

Dist	COUNTY	ROUTE	POST MILES TOTAL PROJECT	SHEET No.	TOTAL SHEETS
03	Sac	50	R5.3/12.8	195	843

REGISTERED CIVIL ENGINEER DATE 12-26-08

PLANS APPROVAL DATE 3-23-09

REGISTERED PROFESSIONAL ENGINEER CHRIS S. GAIDO No. C62535 Exp. 12-31-09 CIVIL STATE OF CALIFORNIA

THE STATE OF CALIFORNIA OR ITS OFFICERS OR AGENTS SHALL NOT BE RESPONSIBLE FOR THE ACCURACY OR COMPLETENESS OF ELECTRONIC COPIES OF THIS PLAN SHEET.

NOTES:
1. (N) NOT A SEPARATE PAY ITEM, FOR INFORMATION ONLY.
2. ALL CULVERTS SHALL HAVE POSITIVE WATERTIGHT JOINTS.
3. ALL DOWNDRAINS SHALL HAVE DOWNDRAIN COUPLER.
4. ACP REQUIRES SPECIAL REMOVAL, HANDLING AND DISPOSAL. SEE SPECS.

DRAINAGE QUANTITIES

DRAINAGE PROFILE SHEET No.	DRAINAGE SYSTEM No. ⬡	DRAINAGE UNIT No. ○	FLUSH CULVERT EA	ABANDON CULVERT EA	REMOVE FLARED END SECTION EA	REMOVE ASPHALT CONCRETE DIKE LF	REMOVE OVERSIDE DRAIN EA	REMOVE CULVERT EA	REMOVE INLET EA	REMOVE DOWNDRAIN EA	REMOVE JUNCTION BOX EA	ADJUST INLET EA	MODIFY INLET EA	REMOVE CONCRETE CY	CAP INLET EA	STRUCTURAL BACKFILL (SLURRY CEMENT) CY	PERVIOUS DITCH LINING SQYD	SAND BACKFILL CY	DITCH EXCAVATION CY	ROCK BLANKET (TYPE 1) SQYD	ROCK BLANKET (TYPE 2) SQYD	HOT MIX ASPHALT (TYPE A) TON	PLACE HOT MIX ASPHALT DIKE (TYPE D) LF	PLACE HOT MIX ASPHALT DIKE (TYPE F) LF	PLACE HOT MIX ASPHALT (MISCELLANEOUS AREA) SQYD	PRECAST CONCRETE BOX CULVERT LF	MINOR CONCRETE (MINOR STRUCTURE) CY	MINOR CONCRETE (BACKFILL) CY	30" REINFORCED CONCRETE PIPE (CLASS II) LF	36" REINFORCED CONCRETE PIPE (CLASS II) LF			ALIGNMENT	STATION	DESCRIPTION
																			2				(N)			2											
DP-25	58	d								1																							A1	776+00	REMOVE 12" x 17.1 CSP DD
DP-25	58	e																															A1	776+00	12" x 50.2′ CSP DD, 22.5° ELBOW
DP-25	58	f																															A1	776+00	14 x 24 RSP
	59	a																	474.4														A1	775+50	EARTH V-DITCH
	60	a																	278.3														A1	771+63	EARTH V-DITCH
SHEET TOTAL										1									752.7																		
GRAND TOTAL			4	19	30	60	3	37	36	7	1	1	1	5.0	4	486.4	608	242.4	~~2124.5~~ 1555.5	821.9	124.9	436.2	105.0	90.0	1289.3	368	~~792.0~~ 376	9.99	1124.2	168.3							

2 REVISED PER ADDENDUM No. 2 DATED AUGUST 7, 2009

THIS PLAN ACCURATE FOR DRAINAGE WORK ONLY

DRAINAGE QUANTITIES
DQ-31

CALCULATED-DESIGNED BY CHRIS GAIDO
CHECKED BY TED MCDONALD
REVISED BY
DATE REVISED
FUNCTIONAL SUPERVISOR JOHN MARTIN

STATE OF CALIFORNIA - DEPARTMENT OF TRANSPORTATION
Caltrans **DESIGN**

LAST REVISION 03-17-09
DATE PLOTTED => 05-AUG-2009
TIME PLOTTED => 14:03

Dist	COUNTY	ROUTE	POST MILES TOTAL PROJECT	SHEET No.	TOTAL SHEETS
03	Sac	50	R5.3/12.8	260	843

REGISTERED CIVIL ENGINEER 12/23/08 DATE

3-23-09
PLANS APPROVAL DATE

REGISTERED PROFESSIONAL ENGINEER J.L.MARTIN No. C47576 Exp. 12/31/09 CIVIL STATE OF CALIFORNIA

THE STATE OF CALIFORNIA OR ITS OFFICERS OR AGENTS SHALL NOT BE RESPONSIBLE FOR THE ACCURACY OR COMPLETENESS OF ELECTRONIC COPIES OF THIS PLAN SHEET.

STAGE 5 CONSTRUCTION

REMOVE MANLOVE POC AND WHITE ROCK POC

PLACE POLYESTER CONCRETE OVERLAY

PLACE RHMA-O ON US 50 AND INTERCHANGE RAMPS

PLACE THERMOPLASTIC TRAFFIC STRIPES AND PAVEMENT MARKINGS

2 CONSTRUCT SOUND WALL SW12

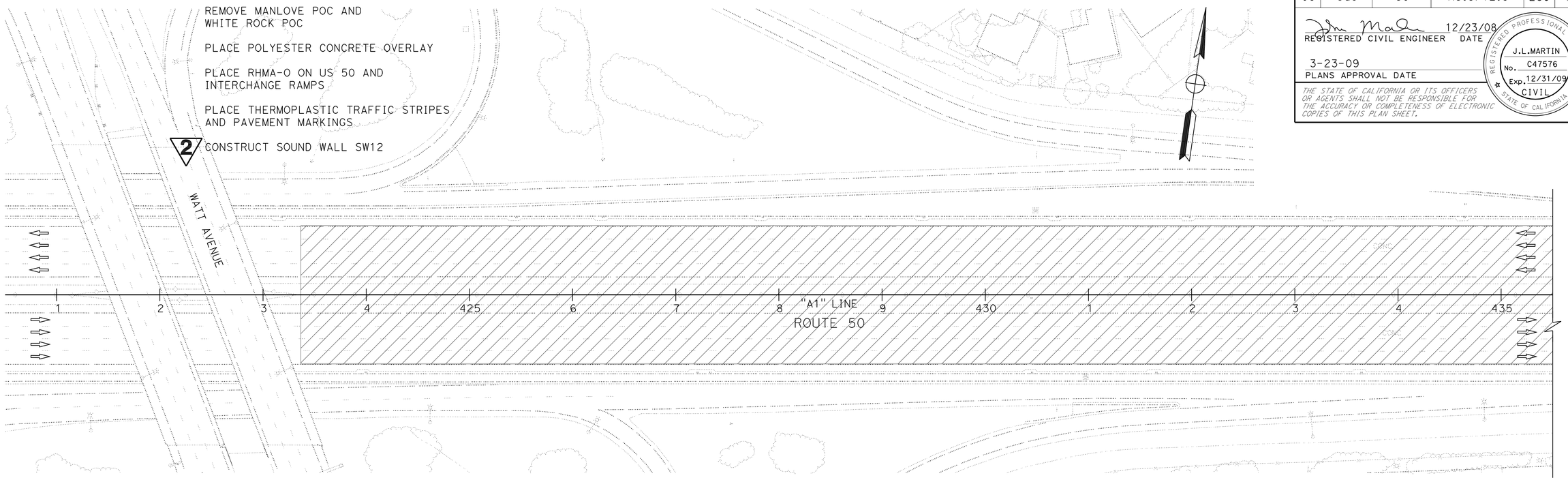

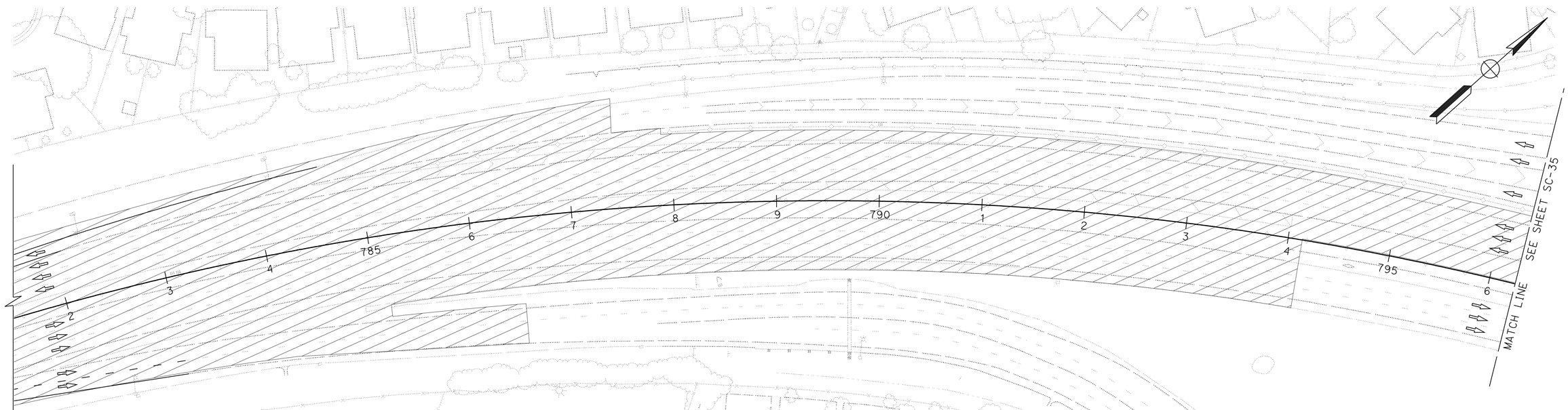

2 **REVISED PER ADDENDUM No. 2 DATED AUGUST 7, 2009**

THIS PLAN ACCURATE FOR STAGE CONSTRUCTION (TRAFFIC HANDLING) WORK ONLY.

STAGE 5

STAGE CONSTRUCTION (TRAFFIC HANDLING PLAN)

SCALE 1′ = 50′

SC-34

REVISED BY | DATE REVISED

JOHN L MARTIN | JOHN A TRIGG

CALCULATED-DESIGNED BY | CHECKED BY

FUNCTIONAL SUPERVISOR: JOHN L MARTIN

STATE OF CALIFORNIA - DEPARTMENT OF TRANSPORTATION

Caltrans **DESIGN**

LAST REVISION 09-18-08 | DATE PLOTTED => 05-AUG-2009 | TIME PLOTTED => 14:03

Dist	COUNTY	ROUTE	POST MILES TOTAL PROJECT	SHEET No.	TOTAL SHEETS
03	Sac	50	R5.3/12.8	265	843

REGISTERED CIVIL ENGINEER 6-19-09 DATE

3-23-09
PLANS APPROVAL DATE

REGISTERED PROFESSIONAL ENGINEER
J.L.MARTIN
No. C47576
Exp. 12/31/09
CIVIL
STATE OF CALIFORNIA

THE STATE OF CALIFORNIA OR ITS OFFICERS OR AGENTS SHALL NOT BE RESPONSIBLE FOR THE ACCURACY OR COMPLETENESS OF ELECTRONIC COPIES OF THIS PLAN SHEET.

2

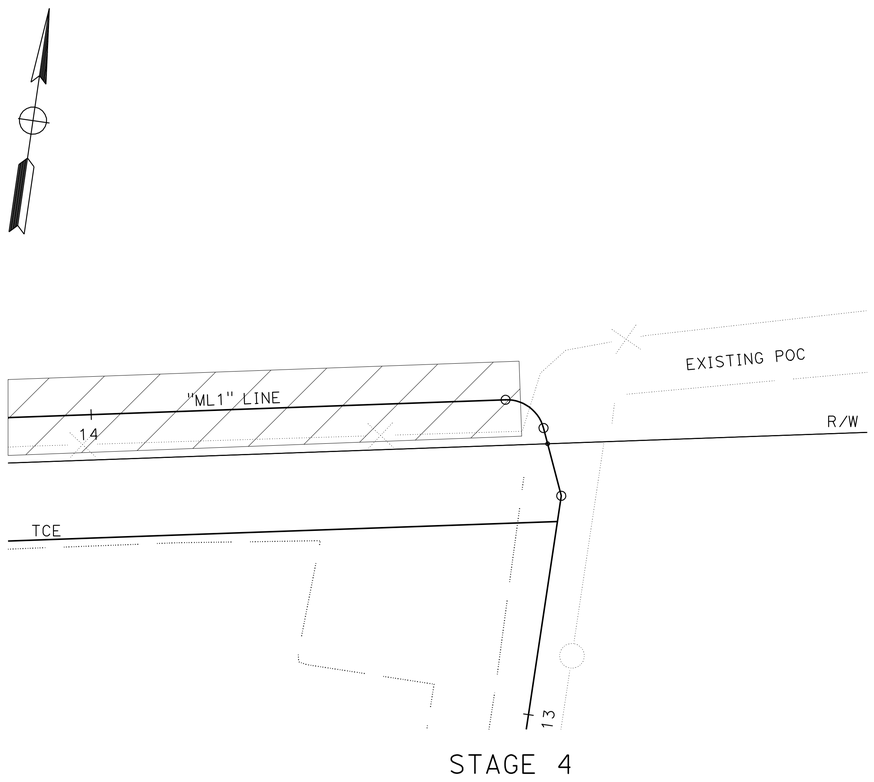

STAGE 4

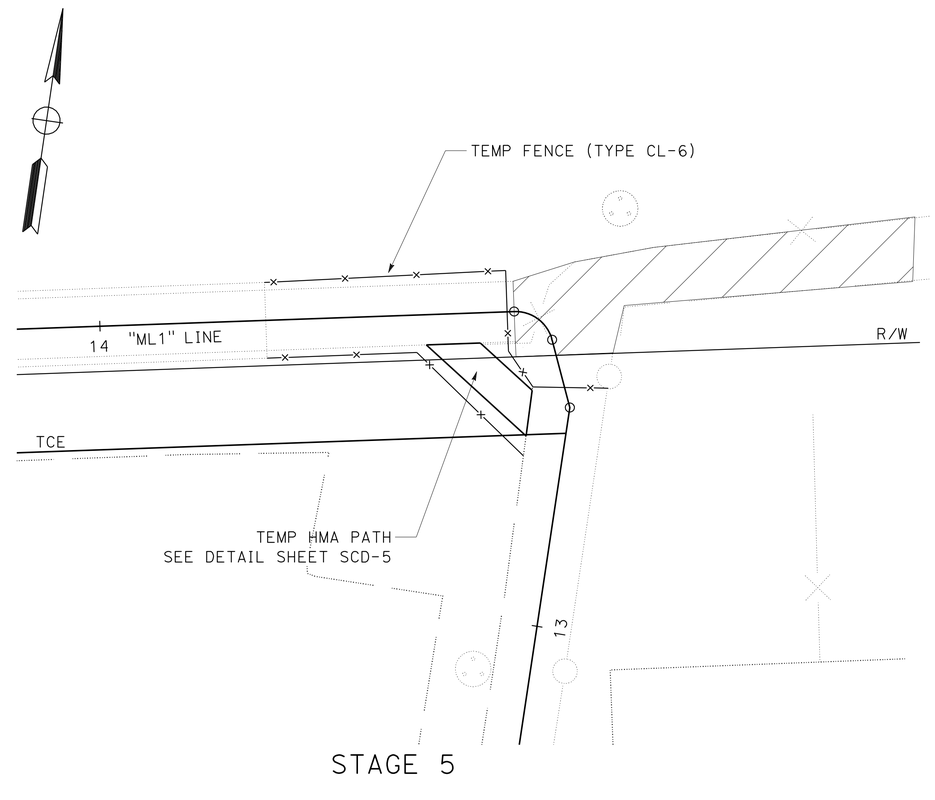

STAGE 5

2 **REVISED PER ADDENDUM No. 2 DATED AUGUST 7, 2009**

THIS PLAN ACCURATE FOR STAGE CONSTRUCTION (TRAFFIC HANDLING) WORK ONLY.

STAGE CONSTRUCTION DETAILS

SCALE: 1" = 10'

SCD-4

REVISED BY	DATE REVISED

CALCULATED-DESIGNED BY: JOHN L MARTIN
CHECKED BY: JOHN A TRIGG
FUNCTIONAL SUPERVISOR: JOHN L MARTIN

STATE OF CALIFORNIA - DEPARTMENT OF TRANSPORTATION
Caltrans
DESIGN

LAST REVISION 06-18-09
DATE PLOTTED => 05-AUG-2009
TIME PLOTTED => 14:03

Dist	COUNTY	ROUTE	POST MILES TOTAL PROJECT	SHEET No.	TOTAL SHEETS
03	Sac	50	R5.3/12.8	267	843

REGISTERED CIVIL ENGINEER 12/23/08 DATE

3-23-09
PLANS APPROVAL DATE

REGISTERED PROFESSIONAL ENGINEER J.L.MARTIN No. C47576 Exp. 12/31/09 CIVIL STATE OF CALIFORNIA

THE STATE OF CALIFORNIA OR ITS OFFICERS OR AGENTS SHALL NOT BE RESPONSIBLE FOR THE ACCURACY OR COMPLETENESS OF ELECTRONIC COPIES OF THIS PLAN SHEET.

STAGE	TEMPORARY TRAFFIC STRIPE (PAINT)													TEMPORARY PAVEMENT MARKER														
	"WHITE"									"YELLOW"				(TYPE A)			(TYPE C)			(TYPE G)								(TYPE H)	
	DETAIL 11	DETAIL 12	DETAIL 14A	DETAIL 27B	DETAIL 36	DETAIL 36A	DETAIL 36B	DETAIL 37	DETAIL 38B	DETAIL 1	DETAIL 25	DETAIL 25A	DETAIL 28	DETAIL 10	DETAIL 13	DETAIL 14	DETAIL 14	DETAIL 14A	DETAIL 37	DETAIL 10	DETAIL 12	DETAIL 13	DETAIL 36	DETAIL 36A	DETAIL 36B	DETAIL 37	DETAIL 38B	DETAIL 25	DETAIL 25A
	LF	LF	LF	LF	LF	LF	LF	LF	LF	LF	LF	LF	LF	EA	EA	EA	EA	EA	EA	EA	EA	EA	EA	EA	EA	EA	EA	EA	EA
STAGE 1	653	933	0	19982	2208	1202	1340	6616	2104	0	15411	1234	1284	0	3496	168	56	0	32	0	25	892	51	27	29	194	94	324	58
STAGE 2	0	27724	1584	34467	3782	2422	1634	17074	2238	883	25737	4508	0	0	4292	204	68	44	40	0	613	1096	88	51	35	530	102	542	199
STAGE 3	0	52910	2016	37510	7710	0	0	13780	2082	0	28358	5277	0	113	2992	192	64	56	40	20	1136	770	181	0	0	420	96	596	229
STAGE 4	0	111335	4176	20216	1084	1060	1006	5292	600	0	12965	1688	0	122	0	0	0	116	8	22	2374	0	25	23	21	170	28	275	76
SUMMARY	653	192902	7776	112175	14784	4684	3980	42762	7024	883	82471	12707	1284	235	10780	564	188	216	120	42	4148	2758	345	101	85	1314	320	1737	562
SUBTOTAL	386,740									97,345				11,579			524			9,113							2,299	
TOTAL	484,085													23,515														

STAGE	CHANNELIZER (SURFACE MOUNTED)	TEMPORARY RAILING (TYPE K)	TEMPORARY CRASH CUSHION MODULE	TYPE III BARRICADE	TEMPORARY TRAFFIC SCREEN	TEMPORARY FENCE (TYPE CL-6) 2	PLACE HOT MIX ASPHALT (MISCELLANEOUS AREA) 2	HOT MIX ASPHALT (TYPE A) 2	TEMPORARY PAVEMENT MARKING (PAINT)	REMOVE PAVEMENT MARKING	REMOVE YELLOW THERMOPLASTIC TRAFFIC STRIPE	REMOVE TRAFFIC STRIPE
	EA	LF	EA	EA	LF	LF	SQYD	TON	SQFT	SQFT	LF	LF
STAGE 1	56	15880	85	32	0	0	0	0	0	0	17929	64121
STAGE 2	380	26360	126	12	1200	0	~~8.7~~ 0	~~1.7~~ 0	1007	1007	22864	66045
STAGE 3	254	17340	77	14	0	800	0	0	1155	1155	17167	39526
STAGE 4	323	42380	112	1	37640	0	0 ~~8.7~~	0 ~~1.7~~	252	252	2785	58071
STAGE 5	0	0	0	0	0	100 ~~280~~	7.5 ~~60.6~~	1.4 ~~10.6~~	0	177	0	0
TOTAL	1,013	101,960	400	59	38,840	~~1,080~~* 900	~~69.3~~* 16.2	~~12.3~~* 3.1	2,414	2,591	60,745	227,763*

* ADDITIONAL QUANTITIES SHOWN ELSEWHERE, SEE SHEET Q-4 AND Q-5 FOR TOTAL QUANTITY.

2 **REVISED PER ADDENDUM No. 2 DATED AUGUST 7, 2009**

CONSTRUCTION AREA SIGNS						
CODE	PANEL SIZE (INCH)	REMARKS	STAGE 1	STAGE 2	STAGE 3	STAGE 4
C30A(CA)	48" X 48"	"SHOULDER CLOSED"	12	19	4	6
M4-9A	30" X 24"	"BIKE/PEDESTRIAN DETOUR"				1

STAGE	4" THERMOPLASTIC TRAFFIC STRIPE	4" THERMOPLASTIC TRAFFIC STRIPE (BROKEN 36 - 12)		4" THERMOPLASTIC TRAFFIC STRIPE (BROKEN 17-7)
	DETAIL 27B (WHITE)	DETAIL 11 (WHITE)	DETAIL 31 (YELLOW)	DETAIL 1 (YELLOW)
	LF	LF	LF	LF
STAGE 2	746	648	2616	
STAGE 4	900			892
SUMMARY	1,646	648	2616	892
TOTAL	1,646*	3,264*		892*

STAGE CONSTRUCTION QUANTITIES

SCQ-1

STATE OF CALIFORNIA - DEPARTMENT OF TRANSPORTATION
Caltrans DESIGN

FUNCTIONAL SUPERVISOR: JOHN L MARTIN
CALCULATED-DESIGNED BY: JOHN L MARTIN
CHECKED BY: JOHN A TRIGG
REVISED BY
DATE REVISED

LAST REVISION 03-12-09
DATE PLOTTED => 05-AUG-2009
TIME PLOTTED => 14:03

344161mc001.add

Dist	COUNTY	ROUTE	POST MILES TOTAL PROJECT	SHEET No.	TOTAL SHEETS
03	Sac	50	R5.3/12.8	314	843

Joyce K. Loftus 03-05-09
REGISTERED CIVIL ENGINEER DATE

3-23-09
PLANS APPROVAL DATE

REGISTERED PROFESSIONAL ENGINEER Joyce K. Loftus No. 38426 Exp. 3-31-11 CIVIL STATE OF CALIFORNIA

THE STATE OF CALIFORNIA OR ITS OFFICERS OR AGENTS SHALL NOT BE RESPONSIBLE FOR THE ACCURACY OR COMPLETENESS OF ELECTRONIC COPIES OF THIS PLAN SHEET.

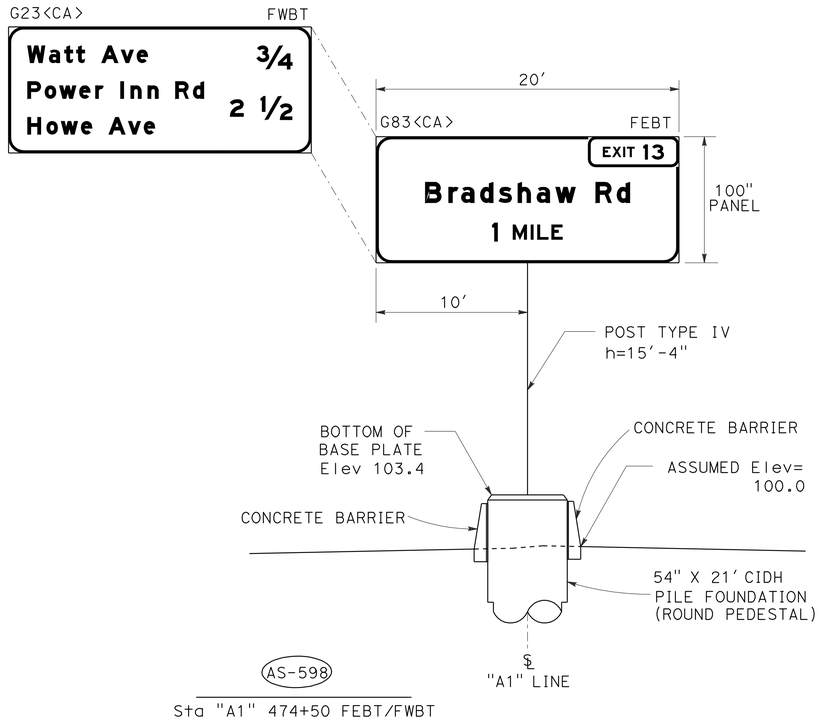

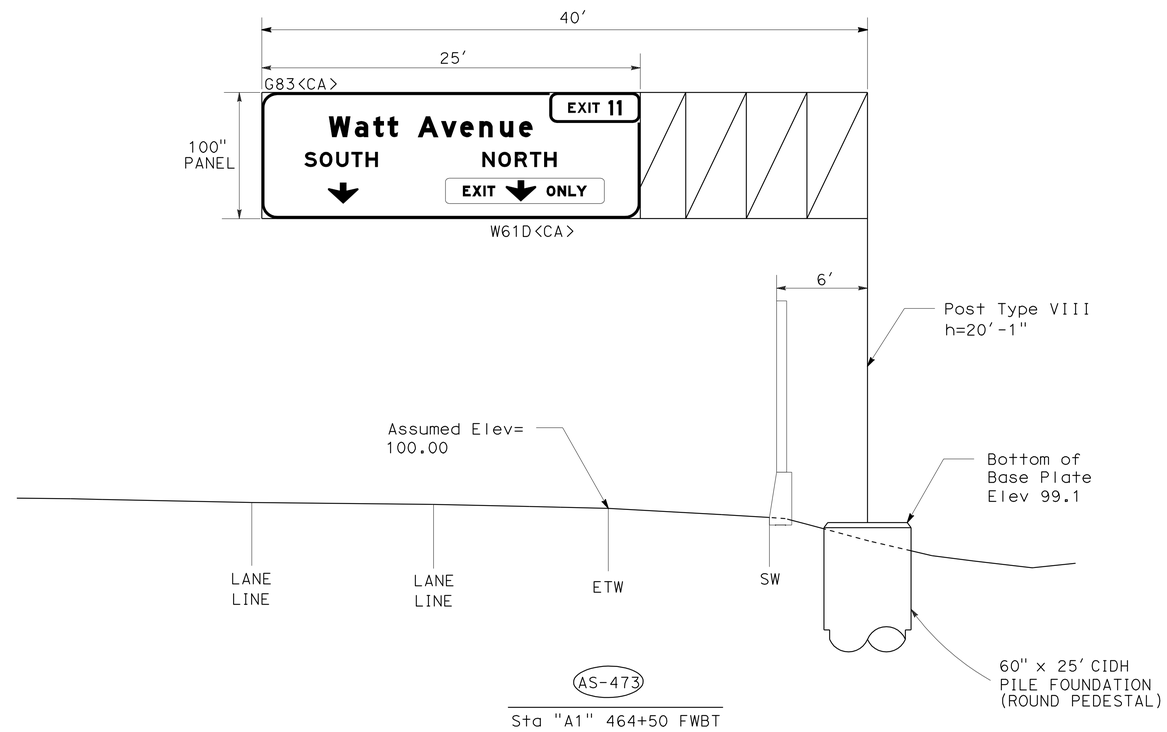

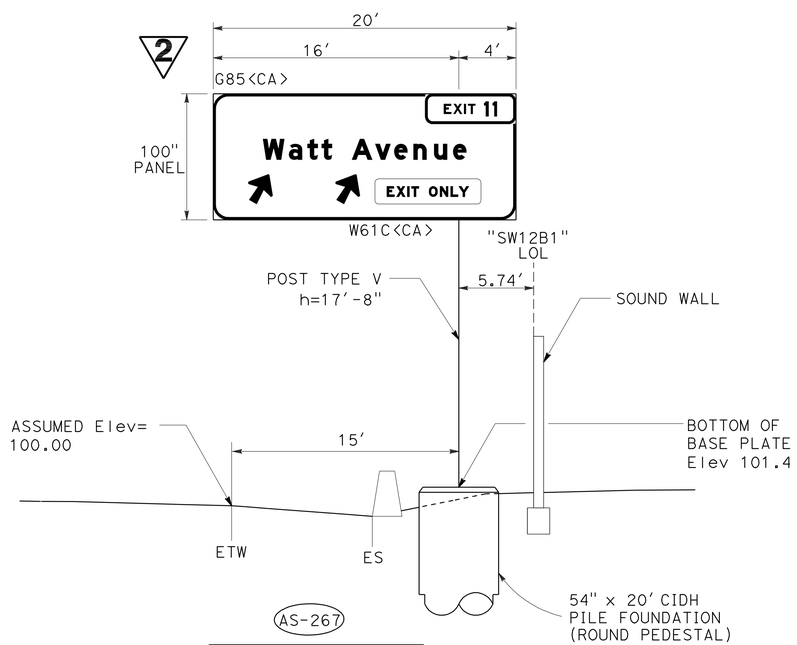

NOTES:

1. "h" = DISTANCE FROM BOTTOM OF FRAME TO BOTTOM OF BASE PLATE.
2. OVERHEAD SIGN PANELS SHALL BE LAMINATED PANELS - TYPE A, UNLESS OTHERWISE SHOWN.
3. ASSUMED ELEVATIONS ARE AT FINISHED GRADE.

SIGN DETAILS

NO SCALE

2 **REVISED PER ADDENDUM No. 2 DATED AUGUST 7, 2009**

SD-5

STATE OF CALIFORNIA - DEPARTMENT OF TRANSPORTATION
Caltrans®
TRAFFIC

FUNCTIONAL SUPERVISOR: SHAUN A. RICE
CALCULATED-DESIGNED BY: JOYCE LOFTUS
CHECKED BY: JOYCE LOFTUS
REVISED BY
DATE REVISED

LAST REVISION 03-05-09 | DATE PLOTTED => 05-AUG-2009 | TIME PLOTTED => 14:03

Dist	COUNTY	ROUTE	POST MILES TOTAL PROJECT	SHEET No.	TOTAL SHEETS
03	Sac	50	R5.3/12.8	352	843

12-24-08
REGISTERED CIVIL ENGINEER DATE

3-23-09
PLANS APPROVAL DATE

REGISTERED PROFESSIONAL ENGINEER M.B.SULLIVAN No. C65245 Exp. 9/30/09 CIVIL STATE OF CALIFORNIA

THE STATE OF CALIFORNIA OR ITS OFFICERS OR AGENTS SHALL NOT BE RESPONSIBLE FOR THE ACCURACY OR COMPLETENESS OF ELECTRONIC COPIES OF THIS PLAN SHEET.

BARRIER RAIL AND FENCE QUANTITIES

ALIGNMENT	STATION/LOCATION	LOCATION	REMOVE FENCE	REMOVE CONCRETE BARRIER	CHAIN LINK FENCE (TYPE CL-3)	CHAIN LINK FENCE (TYPE CL-6)	4' CHAIN LINK GATE (TYPE CL-3)	10' CHAIN LINK GATE (TYPE CL-6)	PICKET FENCE (TYPE 6)	CONCRETE BARRIER (TYPE 50)	REMOVABLE BARRIER POST	CONCRETE BARRIER (TYPE 60D MODIFIED)	CONCRETE BARRIER (TYPE 60R)	CONCRETE BARRIER (TYPE 60 MODIFIED)	CONCRETE BARRIER (TYPE 60C MODIFIED)	CONCRETE BARRIER (TYPE 60E MODIFIED)
		LT/RT/CL	LF	LF	LF	LF	EA	EA	LF	LF	EA	LF	LF	LF	LF	LF
A1	424+32.80 TO 439+44.30	CL												1511.5		
A1	439+44.30 TO 440+30.60	CL														35.0
A1	440+30.60 TO 474+04.00	CL												3373.4		
A1	474+04.00 TO 474+96.00	CL														184.0
A1	484+46.50 TO 489+56.00	CL												509.5		
A1	489+56.00 TO 491+44.00	CL														376.0
A1	491+44.00 TO 491+96.00	CL												52.0		
A1	492+04.00 TO 508+11.00	CL												1607.0		
A1	508+11.00 TO 510+07.00	CL														392.0
A1	510+07.00 TO 514+70.07	CL												463.1		
A1	514+70.07 TO 537+94.71	CL													2324.6	
A1	537+94.71 TO 542+54.00	CL												459.3		
A1	542+54.00 TO 543+46.00	CL														184.0
A1	543+46.00 TO 548+57.00	CL												511.0		
A1	548+57.00 TO 550+46.00	CL														378.0
A1	550+46.00 TO 581+49.00	CL												3103.0		
A1	581+49.00 TO 582+51.00	CL														204.0
A1	582+51.00 TO 591+83.65	CL												932.7		
A1	633+40.00 TO 634+35.00	CL		95.0						45.0						
A1	636+50.00 TO 638+10.00	CL		160.0						160.0						
A1	642+83.00 TO 643+60.00	CL		77.0						77.0						
A1	649+37.00 TO 649+52.00	CL		15.0										15.0		
A1	649+52.00 TO 650+48.00	CL		96.0												192.0
A1	650+48.00 TO 650+63.00	CL		15.0										15.0		
A1	675+35.00 TO 676+29.00	CL		188.0										94.0		
A1	680+07.00 TO 680+22.00	CL		15.0										15.0		
A1	680+22.00 TO 681+10.00	CL		88.0												176.0
A1	681+10.00 TO 681+25.00	CL		15.0										15.0		
A1	707+34.00 TO 707+49.00	CL		15.0										15.0		
A1	707+49.00 TO 708+51.00	CL		102.0												204.0
A1	708+51.00 TO 708+66.00	CL		15.0										15.0		
A1	725+24.00 TO 725+39.00	CL		15.0										15.0		
A1	725+39.00 TO 726+61.00	CL		122.0												244.0
A1	726+61.00 TO 726+76.00	CL		15.0										15.0		
A1	735+05.00 TO 738+05.00	CL		300.0						300.0						
A1	741+37.30 TO 744+55.00	CL		317.7						317.7						
A1	746+87.00 TO 749+55.00	CL		268.0						268.0						
A1	752+87.00 TO 755+22.00	CL		235.0						235.0						
A1	440+30.01 TO 442+20.38	LT												190.4		
A1	442+20.38 TO 443+05.45	LT										85.1				
A1	443~~+05.45~~ 443+26.49 TO 443+55.45	LT												~~50.0~~ 29.0		
A1	634+73.30 TO 635+64.40	LT											182.2			
A1	655+37.17 TO 668+21.80	LT													1284.6	
A1	681+65.80 TO 707+34.42	LT													2568.6	
A1	729+90.74 TO 757+49.76	LT													2759.0	
A1	785+53.00 TO 787+92.00	LT		239.0												
A1	440+04.40 TO 442+92.00	RT	287.6													
A1	607+79.00 TO 609+21.00	RT														284.0
A1	680+04.06 TO 707+11.82	RT	2774.0		2426.6		2								2707.8	
A1	754+19.99 TO 755+00.03	RT													80.0	
ML1	11+74.68 TO 22+44.07	LT/RT	402.2			~~384.6~~ 296.2			~~159.0~~ 127.6		2					
WR2	11+00.00 TO 11+43.60	LT/RT	437.0			308.3		2	20.6		4					
Z3	4+30.60 TO 7+80.00	RT			349.4										349.4	
Z5	22+09.55 TO 24+00.00	LT													190.5	
Z5	26+25.15 TO 29+90.74	LT													365.6	
		TOTAL	3900.8*	2407.7*	2776.0	~~692.9*~~ 604.5	2	2	~~179.6*~~ 148.2	1402.7	6	85.1*	182.2	~~12976.9~~ 12955.9	12630.1	2853.0

* ADDITIONAL QUANTITIES SHOWN ELSEWHERE, SEE SHEETS Q-4 AND Q-5 FOR TOTAL QUANTITY.

2 REVISED PER ADDENDUM No. 2 DATED AUGUST 7, 2009

EROSION CONTROL

	UNIT	QTY
SEED (EROSION CONTROL) (N)	LB	300
FIBER (EROSION CONTROL) (N)	LB	~~600~~ 1500
COMMERCIAL FERTILIZER (EROSION CONTROL) (N)	LB	5400
STABILIZING EMULSION (SOLIDS) (N)	LB	~~9000~~ 2100
EROSION CONTROL (TYPE D)	ACRE	15.0
MOVE IN/MOVE OUT (EROSION CONTROL)	EA	8

(N) NOT A SEPARATE PAY ITEM, FOR INFORMATION ONLY.

SMALL BUSINESS UTILIZATION REPORT

STAGE	1	2	3	4	5	TOTAL
QTY	3	3	3	3	1	13

STORM WATER PREVENTION

	UNIT	QTY
TEMPORARY FIBER ROLL	LF	19,800
TEMPORARY CONSTRUCTION ENTRANCE	EA	9
TEMPORARY CHECK DAM	LF	3,000
MOVE-IN/MOVE-OUT (TEMPORARY EROSION CONTROL)	EA	20
TEMPORARY DRAINAGE INLET PROTECTION	EA	130
TEMPORARY SOIL BINDER	SQYD	145,000

TEMPORARY FENCE (TYPE ESA)

SHEET NO.	ALIGNMENT	LOCATION STATION, OFFSET FROM	LOCATION STATION, OFFSET TO	LT/RT/CL	TEMPORARY FENCE (TYPE ESA) LF
L-7	A1	549+46, 217′	550+06, 200′	RT	155
	A1	550+06, 200′	550+11, 214′	RT	
	A1	550+11, 214′	549+51, 231′	RT	
	A1	549+51, 231′	549+46, 217′	RT	
L-7	A1	558+80, 110′	558+94, 100′	RT	101
	A1	558+94, 100′	559+13, 128′	RT	
	A1	559+13, 128′	558+99, 138′	RT	
	A1	558+99, 138′	558+80, 110′	RT	
L-9	A1	582+36, 143′	582+36, 108′	LT	103
	A1	582+36, 108′	583+00, 108′	LT	
L-11	A1	618+47, 130′	618+99, 130′	LT	52
L-11	A1	618+51, 119′	609+04, 119′	RT	53
L-16	A1	674+41, 115′	674+42, 154′	RT	39
L-17	A1	681+30, 105′	681+30, 145′	RT	40
L-18	A1	703+34, 110′	707+52, 155′	RT	433
	A1	707+52, 155′	707+46, 165′	RT	
			TOTAL		976

SUMMARY OF QUANTITIES

Q-2

REVISED BY | DATE REVISED
JOLENA ASTIN | MICHAEL SULLIVAN
CALCULATED-DESIGNED BY | CHECKED BY
FUNCTIONAL SUPERVISOR: JOHN MARTIN
STATE OF CALIFORNIA - DEPARTMENT OF TRANSPORTATION
Caltrans DESIGN
344161pa002.add

LAST REVISION 03-23-09 | DATE PLOTTED => 05-AUG-2009 | TIME PLOTTED => 14:03

Dist	COUNTY	ROUTE	POST MILES TOTAL PROJECT	SHEET No.	TOTAL SHEETS
03	Sac	50	R5.3/12.8	353	843

12-24-08
REGISTERED CIVIL ENGINEER DATE

3-23-09
PLANS APPROVAL DATE

REGISTERED PROFESSIONAL ENGINEER M.B.SULLIVAN No. C65245 Exp. 9/30/09 CIVIL STATE OF CALIFORNIA

THE STATE OF CALIFORNIA OR ITS OFFICERS OR AGENTS SHALL NOT BE RESPONSIBLE FOR THE ACCURACY OR COMPLETENESS OF ELECTRONIC COPIES OF THIS PLAN SHEET.

2

* ADDITIONAL QUANTITIES SHOWN ELSEWHERE, SEE SHEET Q-4 AND Q-5 FOR TOTAL QUANTITY.

ROADWAY ITEMS

STATION	LOCATION LT/RT/CL	(N) WALL DRAIN WITH PIPE DOME EA	COLD PLANE ASPHALT CONCRETE PAVEMENT SQYD	REMOVE CONCRETE CY	ROADWAY EXCAVATION CY	(N) ROADWAY EMBANKMENT CY	IMPORTED MATERIAL (SHOULDER BACKING) TON	CLASS 2 AGGREGATE BASE CY	ASPHALT TREATED PERMEABLE BASE ROADWAY CY	ASPHALT TREATED PERMEABLE BASE (N) EDGEDRAIN CY	SEAL RANDOM CRACKS LNMI	HOT MIX ASPHALT (TYPE A) TON	RUBBERIZED HOT MIX ASPHALT (OPEN GRADED) TON	PLACE HOT MIX ASPHALT DIKE (TYPE C) LF	PLACE HOT MIX ASPHALT DIKE (TYPE D) ROADWAY LF	PLACE HOT MIX ASPHALT DIKE (TYPE D) (N) DRAINAGE LF	PLACE HOT MIX ASPHALT DIKE (TYPE F) LF	PLACE HOT MIX ASPHALT (MISCELLANEOUS AREA) SQYD	TACK COAT TON	DOWEL BAR RETROFIT EA	GRIND EXISTING CONCRETE PAVEMENT SQYD	PLACE STAMPED ASPHALT SQYD	3" PLASTIC PIPE (EDGE DRAIN) LF	6" PLASTIC PIPE (EDGE DRAIN) LF	CLEANOUT ASSEMBLY (EDGE DRAIN) EA	6" PLASTIC PIPE (EDGE DRAIN OUTLET) LF	FILTER FABRIC ROADWAY SQYD	FILTER FABRIC (N) EDGEDRAIN UNDERDRAIN SQYD	CLASS 1 PERMEABLE MATERIAL CY	ROCK SLOPE PROTECTION (BACKING No. 3, METHOD B) CY	ROCK SLOPE PROTECTION FABRIC SQYD	MINOR CONCRETE (CURB AND GUTTER) CY	MINOR CONCRETE (SIDEWALK) CY
STAGE 1																																		
"A1" 713+88.34 TO "A1" 784+61.07	LT				10872	21755	947	13367	23			8639							5			521					3410		1453				
"A1" 706+75.22 TO "A1" 780+37.12	RT				12568	11200	972	12212	79			8823		61	2210				5			657											
"Z4" 23+32.84 TO "Z4" 28+00.00	RT				2215	483						502			257								107	911	4	77		354					
"Z5" 22+09.55 TO "Z5" 29+90.74	LT		342		764	296		481		17		350											65	904	4	68		352					
"Z6" 15+78.20 TO "Z6" 22+50.00	LT				1684	32		705	149	11		748		62	13	15	25						40	554	3	56		216		1	4		
STAGE 2																																		
"A1" 634+08.49 TO "A1" 727+23.37	LT		1364		9487	423	410	8045	147			5854						96	3			525											
"A1" 631+63.82 TO "A1" 723+32.66	RT				13083	219	478	8495	213			6215			850			119	3			380					2050		342				
"M4" 38+52.32 TO "M4" 55+00.00	RT		398		11989	24		2259				1631		61	780		27	117	1											1	4	10	
"M5" 47+21.06 TO "M5" 55+50.00	LT		427		2223			715				550			829																		
"M6" 39+91.59 TO "M6" 53+50.00	LT			52	3576	350		2062				1524		63	743	15	25					543								1	4	38	15
"WR2" 8+00.42 TO "WR2" 16+67.00	RT			10	69			281				54						194														24	57
"Z2" 8+69.71 TO "Z2" 17+88.14	LT				1587	127		1381	123	15		648											49	891	3	57		347					
"Z3" 4+30.60 TO "Z3" 12+50.00	RT				1181	68		898	156	17		325			198	15							28	781	3	66		304					
"Z4" 15+73.30 TO "Z4" 23+32.84	RT				3677	789		1349		18		993			703			131														3	
"Z7" 5+73.25 TO "Z7" 18+09.82	RT			29	4679	307		2423	272	18		1190		62	650	30	26	136				328	63	843	5	86		328		1	4	30	16
STAGE 3																																		
"A1" 570+20.00 TO "A1" 652+88.02	LT	1			21902	2006	521	11451				8301			2401				4														
"A1" 570+20.00 TO "A1" 648+93.91	RT				25365	1850	1137	12507				9090			1819	15			5														
"M2" 28+50.00 TO "M2" 37+50.00	LT				5634	6		699				543			900																		
"M3" 30+43.27 TO "M3" 35+40.00	LT				4281			480				371			497																		
"M7" 32+67.73 TO "M7" 45+50.00	RT		263	24	4052	783		2504				1828		62	817		25		1			382								1	4	21	
STAGE 4																																		
"A1" 428+62.48 TO "A1" 436+83.50	CL			17	50984			43416				30518			3852	15	90	1382	16													307	
"ML1" 11+74.68 TO "ML1" 22+44.07	RT				5	29		13				2						8															8
STAGE 5																																		
"A1" 423+36.60 TO "A1" 821+04.69	LT/CL/RT										56		45987							61112	393564												
"M2" 35+90.65 TO "M2" 44+42.40	LT/CL/RT												156																				
"M3" 33+14.25 TO "M2" 40+92.95	LT/CL/RT												215																				
"M4" 38+52.32 TO "M2" 48+66.29	LT/CL/RT												308																				
"M5" 42+18.00 TO "M2" 52+79.36	LT/CL/RT												277																				
"M6" 44+93.40 TO "M2" 53+50.00	LT/CL/RT												215																				
"M7" 32+67.73 TO "M2" 40+35.43	LT/CL/RT												300																				
"Z2" 14+02.52 TO "M2" 22+74.00	LT/CL/RT												195																				
"Z3" 7+00.00 TO "M2" 12+50.00	LT/CL/RT												128																				
"Z4" 15+73.30 TO "M2" 21+43.61	LT/CL/RT												278																				
"Z5" 18+92.00 TO "M2" 27+20.11	LT/CL/RT												70																				
"Z6" 20+86.00 TO "M2" 26+00.00	LT/CL/RT												146																				
"Z7" TO "M2" 13+03.16	LT/CL/RT												320																				
TOTAL		2	2794	132*	191877	40747	4465	125743	1162	96	56	88699*	48595*	371	17519	105	218*	2183*	43	61112	393564	3336	352	4884	22	410	5460*	1900	1795*	5*	20*	433	96

(N) NOT A SEPERATE PAY ITEM, FOR INFORMATION ONLY

2 **REVISED PER ADDENDUM No. 2 DATED AUGUST 7, 2009**

SUMMARY OF QUANTITIES

Q-3

REVISED BY | DATE REVISED
JOLENA ASTIN | MICHAEL SULLIVAN
CALCULATED-DESIGNED BY | CHECKED BY
FUNCTIONAL SUPERVISOR: JOHN MARTIN
STATE OF CALIFORNIA - DEPARTMENT OF TRANSPORTATION
Caltrans DESIGN
344161pa003.add

LAST REVISION 03-23-09 | DATE PLOTTED => 05-AUG-2009 | TIME PLOTTED => 14:04

Dist	COUNTY	ROUTE	POST MILES TOTAL PROJECT	SHEET No.	TOTAL SHEETS
03	Sac	50	R5.3/12.8	354	843

12-24-08
REGISTERED CIVIL ENGINEER DATE

3-23-09
PLANS APPROVAL DATE

REGISTERED PROFESSIONAL ENGINEER M.B.SULLIVAN No. C65245 Exp. 9/30/09 CIVIL STATE OF CALIFORNIA

THE STATE OF CALIFORNIA OR ITS OFFICERS OR AGENTS SHALL NOT BE RESPONSIBLE FOR THE ACCURACY OR COMPLETENESS OF ELECTRONIC COPIES OF THIS PLAN SHEET.

2

QUANTITY SUMMARY

	TEMPORARY FENCE (TYPE CL-6)	REMOVE FENCE	REMOVE METAL BEAM GUARD RAILING	REMOVE TRAFFIC STRIPE	REMOVE CONCRETE	REMOVE CONCRETE BARRIER	STRUCTURE EXCAVATION (RETAINING WALL)	STRUCTURE BACKFILL (RETAINING WALL)	HOT MIX ASPHALT	RUBBERIZED HOT MIX ASPHALT (OPEN GRADED)	PLACE HOT MIX ASHPALT DIKE (TYPE F)	PLACE HOT MIX ASPHALT (MISCELLANEOUS AREAS)	16" CAST-IN-DRILLED HOLE CONCRETE PILING (SOUND WALL)	24" CAST-IN-DRILLED HOLE CONCRETE PILING (SOUND WALL)	CLASS 1 CONCRETE (RETAINING WALL)	MINOR CONCRETE (SOUND WALL)	FRACTURED RIB TEXTURE	FRACTURED GRANITE TEXTURE	SOUND WALL (MASONRY BLOCK)
	LF	LF	LF	LF	CY	LF	CY	CY	TON	TON	LF	SQYD	LF	LF	CY	CY	SQFT	SQFT	SQFT
STRUCTURE PLANS WHITE ROCK ROAD POC (REPLACE) SHEET 1 OF 35																	5880		
STRUCTURE PLANS WEST CITRUS OVERHEAD (WIDEN) SHEET 1 OF 21										255							3950		
STRUCTURE PLANS MAYHEW OVERHEAD (DECK REHABILITATION) SHEET 1 OF 35										475									
STRUCTURE PLANS MATHER FIELD OC RW6 TIE-BACK RETAINING WALL SHEET 1 OF 10																		1420	
STRUCTURE PLANS MATHER FIELD OC RW7 TIE-BACK RETAINING WALL SHEET 1 OF 10																		1105	
STRUCTURE PLANS ZINFANDEL DRIVE OC RW8 TIE-BACK RETAINING WALL SHEET 1 OF 11																		1620	
STRUCTURE PLANS ZINFANDEL DRIVE OC RW9 TIE-BACK RETAINING WALL SHEET 1 OF 11																		1280	
STRUCTURE PLANS ROUTIER ROAD OC RW1 TIE-BACK RETAINING WALL SHEET 1 OF 10							485	370										1500	
STRUCTURE PLANS ROUTIER ROAD OC RW2 TIE-BACK RETAINING WALL SHEET 1 OF 10							460	340										1520	
STRUCTURE PLANS MANLOVE POC (REPLACE) SHEET 1 OF 28																	6140		
DQ-31					5				436		90	1289							
DQ-32																			
PDQ-1				2680															
SCQ-1	900			227763					3			16							
Q-1			26865																
Q-2		3901				2408													
Q-3					132				88699	48595	128	2183							
R-2							960	1452							654			8085	
R-5							520	759							384			4329	
R-9							1668	2459							1087			12675	
R-13							2704	1017							768				
R-16							205	199							124			1008	
SW-3			723										2800						10304
SW-13	1437	1421											2214	99		10.4			14144
SW-23		1158											1560	41		122			14629
SW-33	2014	1343											3600	164		14.8			15232
SW-44	1514	1502											2576	35		3.7			17314
SW-57						480							3108	37		3			11264
SW-68			1500										3408						12264
SW-79													2048	39		2			6944
SW-96	5577	7598											5792	180		627			63956
SW-129	713	703											4096	41		3.5			16320
SW-131	893	885														126			6800
SW-150	2743	2720											4768	164		264			33380
SW-165B													62	240		5.2			1883
SHEET TOTAL	15791	21231	29088	230443	137	2888	7002	6596	89138	49325	218	3488	36032	1040	3017	1181.6	15970	34542	224434

2 REVISED PER ADDENDUM No. 2 DATED AUGUST 7, 2009

SUMMARY OF QUANTITIES
Q-4

REVISED BY | DATE REVISED
JOLENA ASTIN | MICHAEL SULLIVAN
CALCULATED-DESIGNED BY | CHECKED BY
FUNCTIONAL SUPERVISOR: JOHN MARTIN

STATE OF CALIFORNIA - DEPARTMENT OF TRANSPORTATION
Caltrans DESIGN

344161pa004.add

LAST REVISION 12-31-08 | DATE PLOTTED => 05-AUG-2009 | TIME PLOTTED => 14:04

Dist	COUNTY	ROUTE	POST MILES TOTAL PROJECT	SHEET No.	TOTAL SHEETS
03	Sac	50	R5.3/12.8	355	843

REGISTERED CIVIL ENGINEER DATE 12-24-08

3-23-09
PLANS APPROVAL DATE

REGISTERED PROFESSIONAL ENGINEER M.B.SULLIVAN No. C65245 Exp. 9/30/09 CIVIL STATE OF CALIFORNIA

THE STATE OF CALIFORNIA OR ITS OFFICERS OR AGENTS SHALL NOT BE RESPONSIBLE FOR THE ACCURACY OR COMPLETENESS OF ELECTRONIC COPIES OF THIS PLAN SHEET.

2

QUANTITY SUMMARY

	BAR REINFORCING STEEL (RETAINING WALL)	FILTER FABRIC	CLASS 1 PERMEABLE MATERIAL	ROCK SLOPE PROTECTION (BACKING No. 3, METHOD B)	ROCK SLOPE PROTECTION FABRIC	MINOR CONCRETE (GUTTER)	CHAIN LINK FENCE (TYPE CL-6)	PICKET FENCE (TYPE 6)	CABLE RAILING	CONCRETE BARRIER (TYPE 60D MODIFIED)	CONCRETE BARRIER (TYPE 736A)	CONCRETE BARRIER (TYPE 736S)	CONCRETE BARRIER (TYPE 736SV)	4" THERMOPLASTIC TRAFFIC STRIPE	4" THERMOPLASTIC TRAFFIC STRIPE (BROKEN 36-12)	4" THERMOPLASTIC TRAFFIC STRIPE (BROKEN 17-7)
	LB	SQYD	CUYD	CUYD	SQYD	LF	LF	LF	LF	LF	LF	LF	LF	LF	LF	LF
STRUCTURE PLANS WHITE ROCK ROAD POC (REPLACE) SHEET 1 OF 35								1583								
STRUCTURE PLANS WEST CITRUS OVERHEAD (WIDEN) SHEET 1 OF 21																
STRUCTURE PLANS MAYHEW OVERHEAD (DECK REHABILITATION) SHEET 1 OF 3																
STRUCTURE PLANS MATHER FIELD OC RW6 TIE-BACK RETAINING WALL SHEET 1 OF 10	41500					176			176	172						
STRUCTURE PLANS MATHER FIELD OC RW7 TIE-BACK RETAINING WALL SHEET 1 OF 10	35400					181			181	179						
STRUCTURE PLANS ZINFANDEL DRIVE OC RW8 TIE-BACK RETAINING WALL SHEET 1 OF 11	44500					227			227	224						
STRUCTURE PLANS ZINFANDEL DRIVE OC RW9 TIE-BACK RETAINING WALL SHEET 1 OF 11	40000					232			232	229						
STRUCTURE PLANS ROUTIER ROAD OC RW1 TIE-BACK RETAINING WALL SHEET 1 OF 10	30400					147			147	147						
STRUCTURE PLANS ROUTIER ROAD OC RW2 TIE-BACK RETAINING WALL SHEET 1 OF 10	37300					145			145	145						
STRUCTURE PLANS MANLOVE POC (REPLACE) SHEET 1 OF 28								1521								
DQ-31																
DQ-32		2050	342	293	1570											
PDQ-1														174480	305762	10128
SCQ-1														1646	3264	892
Q-1																
Q-2							605	148		85						
Q-3		5460	1795	5	20											
R-2	42067										860					
R-5	26956			1	4	627			614							
R-9	85395										1318					
R-13	77324	1294	880	1	4	778			768	768						
R-16	10563										240					
SW-3													1248			
SW-13							5						1248			
SW-23							9					240	448			
SW-33													1344			
SW-44							25						1474			
SW-57													1536			
SW-68													1512			
SW-79													744			
SW-96							22					1248	1858			
SW-129							27						1440			
SW-131							28									
SW-150							11						1668			
SW-165B							3						48			
TOTAL	471405	8804	3017	300	1598	2513	735	3252	2490	1949	2418	1488	14568	176126	309026	11020

2 REVISED PER ADDENDUM No. 2 DATED AUGUST 7, 2009

SUMMARY OF QUANTITIES
Q-5

REVISED BY | DATE REVISED
JOLENA ASTIN | MICHAEL SULLIVAN
CALCULATED-DESIGNED BY | CHECKED BY
FUNCTIONAL SUPERVISOR
JOHN MARTIN

STATE OF CALIFORNIA - DEPARTMENT OF TRANSPORTATION
Caltrans DESIGN

344161pa005.add

LAST REVISION 12-31-08 | DATE PLOTTED => 05-AUG-2009 | TIME PLOTTED => 14:04

Dist	COUNTY	ROUTE	POST MILES TOTAL PROJECT	SHEET No.	TOTAL SHEETS
03	Sac	50	R5.3/12.8	537A	843

REGISTERED CIVIL ENGINEER DATE 6-19-09

PLANS APPROVAL DATE 3-23-09

REGISTERED PROFESSIONAL ENGINEER M.B.SULLIVAN No. C65245 Exp. 9/30/09 CIVIL STATE OF CALIFORNIA

THE STATE OF CALIFORNIA OR ITS OFFICERS OR AGENTS SHALL NOT BE RESPONSIBLE FOR THE ACCURACY OR COMPLETENESS OF ELECTRONIC COPIES OF THIS PLAN SHEET.

2

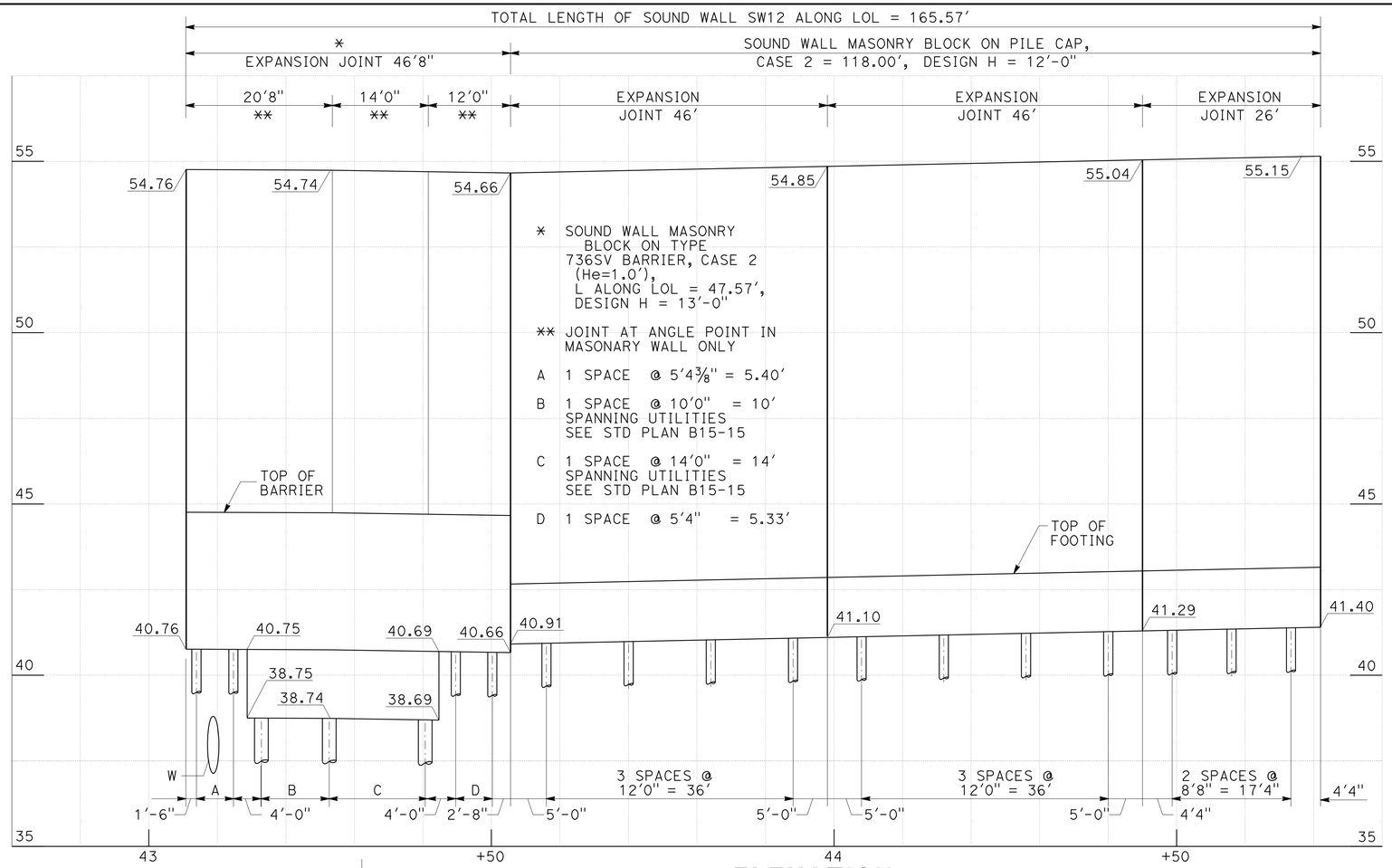

ELEVATION

SCALE 1" = 10' HORIZ
1" = 2' VERT

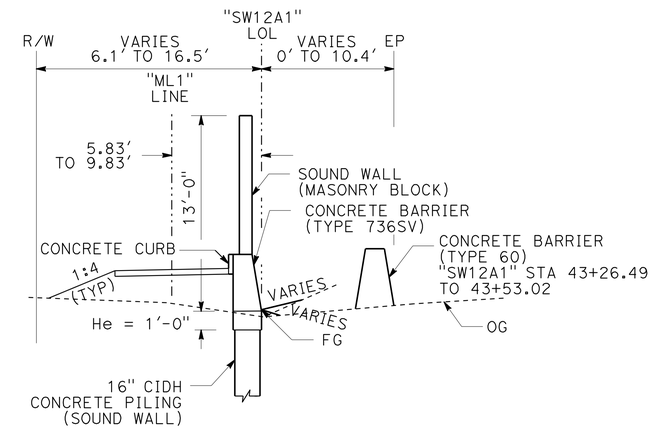

TYPICAL SECTION

"SW12A1" 43+05.45 TO 43+53.02
NO SCALE

NOTES:

FOR SOUND WALL DETAILS SEE SHEET SW-165B

MINIMUM ALLOWABLE SOIL INTERNAL FRICTION ANGLE IS 30°

FOR DETAILS NOT SHOWN, SEE STANDARD PLANS

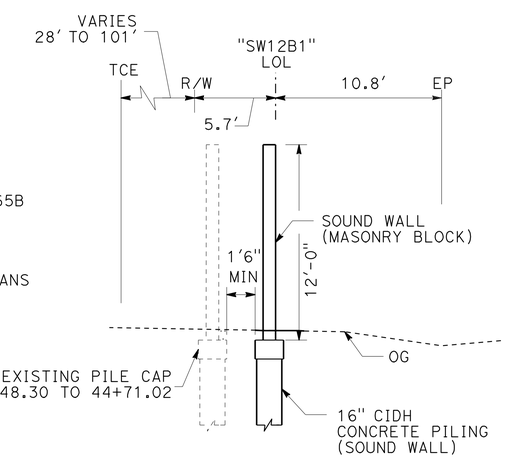

TYPICAL SECTION

"SW12B1" 43+53.02 TO 44+71.02
NO SCALE

SALMON FALLS PARK

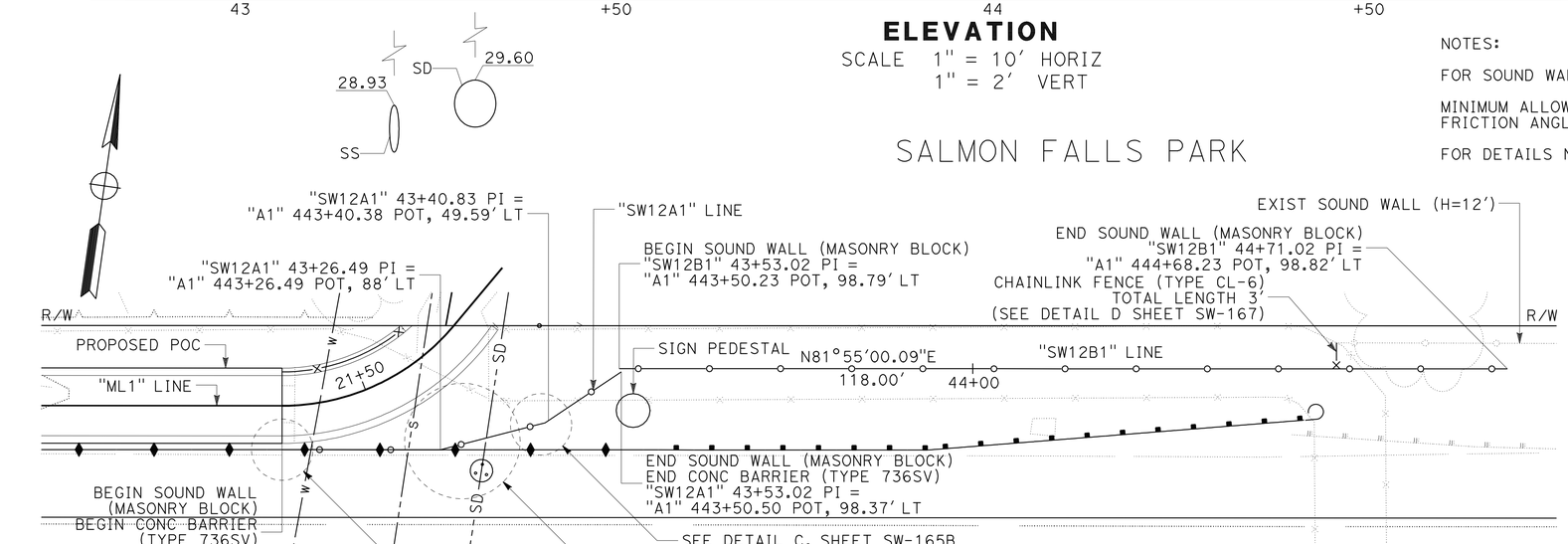

PLAN

SCALE 1" = 10'

THIS PLAN ACCURATE FOR SOUND SWALL WORK ONLY.

2 **ADDED PER ADDENDUM No. 2 DATED AUGUST 7, 2009**

SOUND WALL SW12
SOUND WALL PLAN

SCALE AS SHOWN

SW-165A

REVISED BY | DATE REVISED
JIM RASMUSSEN | MICHAEL SULLIVAN
CALCULATED-DESIGNED BY | CHECKED BY
FUNCTIONAL SUPERVISOR: JOHN MARTIN

STATE OF CALIFORNIA - DEPARTMENT OF TRANSPORTATION
Caltrans
DESIGN

344161r1001.add

LAST REVISION | DATE PLOTTED => 05-AUG-2009 | TIME PLOTTED => 14:04
06-18-09

BORDER LAST REVISED 3/1/2007 | RELATIVE BORDER SCALE IS IN INCHES 0 1 2 3 | USERNAME => trmikesl | DGN FILE => 344161r1001.add | CU 03 240 | EA 441611

Dist	COUNTY	ROUTE	POST MILES TOTAL PROJECT	SHEET No.	TOTAL SHEETS
03	Sac	50	R5.3/12.8	537B	843

6-19-09
REGISTERED CIVIL ENGINEER DATE

3-23-09
PLANS APPROVAL DATE

REGISTERED PROFESSIONAL ENGINEER M.B.SULLIVAN No. C65245 Exp. 9/30/09 CIVIL STATE OF CALIFORNIA

THE STATE OF CALIFORNIA OR ITS OFFICERS OR AGENTS SHALL NOT BE RESPONSIBLE FOR THE ACCURACY OR COMPLETENESS OF ELECTRONIC COPIES OF THIS PLAN SHEET.

2

NOTES:
1. FOR DETAILS NOT SHOWN, SEE STANDARD PLANS
2. EXTEND #5 CONT 1'3" PAST INTERSECTION WITH SOUNDWALL BARRIER REINFORCING
3. SEE SHEET SW-165C FOR MASONRY BLOCK DETAILS
4. ANGLE TO BE VERIFIED IN FIELD
5. SEE PICKET FENCE DETAILS (TYPE 6) IN STRUCTURES PLANS FOR NOT DETAILS NOT SHOWN
6. VERIFY WIDTH OF CONNECTION PANEL IN FIELD
7. CONTRACTOR SHALL VERIFY ALL CONTROLLING FIELD DIMENSIONS BEFORE ORDERING OR FABRICATING ANY MATERIAL

SOUND WALL QUANTITIES

LOCATION	16" CIDH CONCRETE PILING (SOUND WALL)	24" CIDH CONCRETE PILING (SOUND WALL)	SOUND WALL (MASONRY BLOCK)	CONCRETE BARRIER (TYPE 736SV)	MINOR CONCRETE (SOUND WALL)	CHAINLINK FENCE (TYPE CL-6)
	LF	LF	SQFT	LF	CY	LF
SW12	62*	240*	1883*	48*	5.2*	3*

* ADDITIONAL QUANTITIES SHOWN ELSEWHERE, SEE SHEETS Q-4 AND Q-5 FOR TOTAL QUANTITY

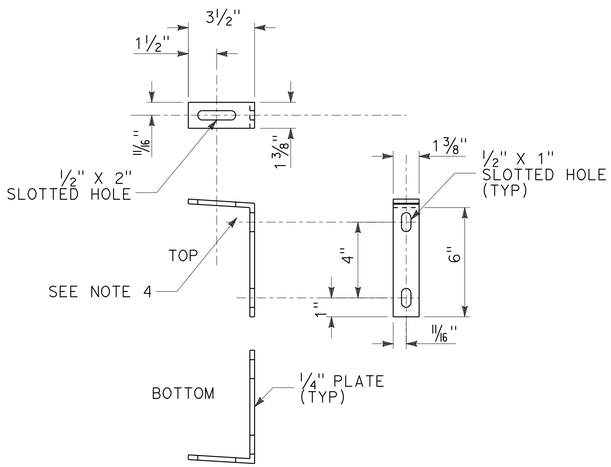

PICKET FENCE BRACKET
SCALE 3" = 1'

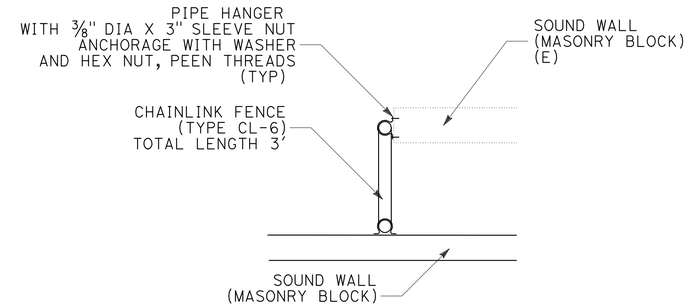

DETAIL D
CHAINLINK FENCE PLAN
SCALE 1" = 2'

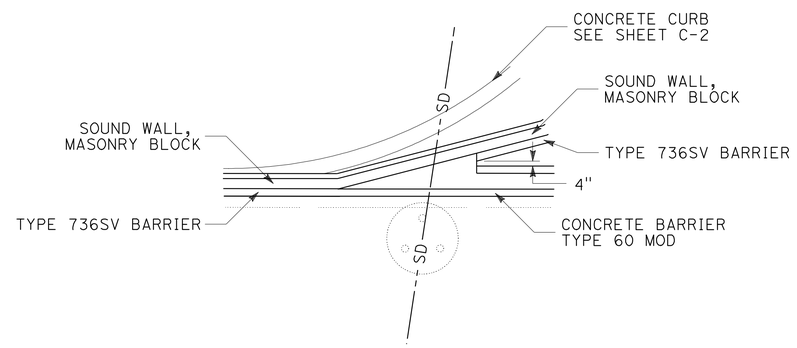

PLAN
SCALE 1" = 5'

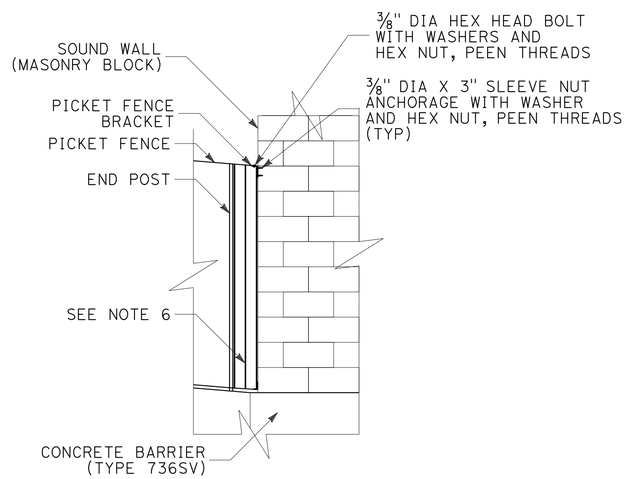

PICKET FENCE CONNECTION
SCALE 1" = 2'

DETAIL A

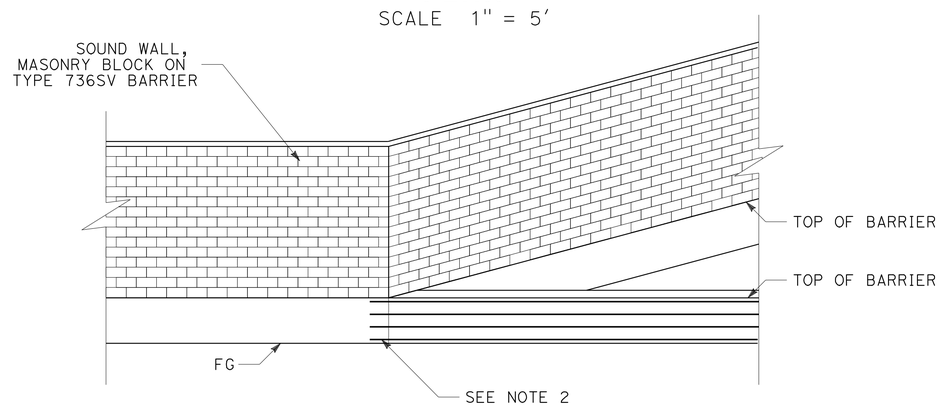

ELEVATION
SCALE 1" = 5'

DETAIL B

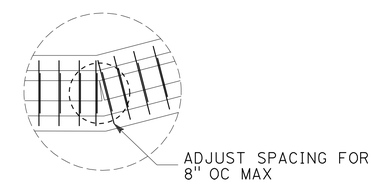

DETAIL C
BARRIER & PILE CAP REINFORCEMENT
SCALE 1" = 2'
SEE STD PLAN B15-15 FOR DETAILS NOT SHOWN

2 **ADDED PER ADDENDUM No. 2 DATED AUGUST 7, 2009**

THIS PLAN ACCURATE FOR SOUND WALL WORK ONLY.

SOUND WALL SW12
SOUND WALL DETAILS AND QUANTITIES
SCALE AS SHOWN

SW-165B

REVISED BY | DATE REVISED
JIM RASMUSSEN | MICHAEL SULLIVAN
CALCULATED-DESIGNED BY | CHECKED BY
FUNCTIONAL SUPERVISOR: JOHN MARTIN

STATE OF CALIFORNIA - DEPARTMENT OF TRANSPORTATION
Caltrans DESIGN

3441611r1002.add

LAST REVISION 06-18-09 | DATE PLOTTED => 05-AUG-2009 | TIME PLOTTED => 14:04

Dist	COUNTY	ROUTE	POST MILES TOTAL PROJECT	SHEET No.	TOTAL SHEETS
03	Sac	50	R5.3/12.8	537C	843

LICENSED LANDSCAPE ARCHITECT

3-23-09
PLANS APPROVAL DATE

LICENSED LANDSCAPE ARCHITECT
KENNETH A. MURRAY
No. 4345
Signature
3-31-10
Renewal Date
12-31-08
Date
STATE OF CALIFORNIA

THE STATE OF CALIFORNIA OR ITS OFFICERS OR AGENTS SHALL NOT BE RESPONSIBLE FOR THE ACCURACY OR COMPLETENESS OF SCANNED COPIES OF THIS PLAN SHEET.

NOTES:

1. See sound wall plan for block details and notes, typical all walls.
2. Walls shown for graphic purposes only, verify all wall heights from layout sheets, typical all walls.
3. All blocks (on this sheet only) are 6" (h) x 8" (d) x 16" (L).

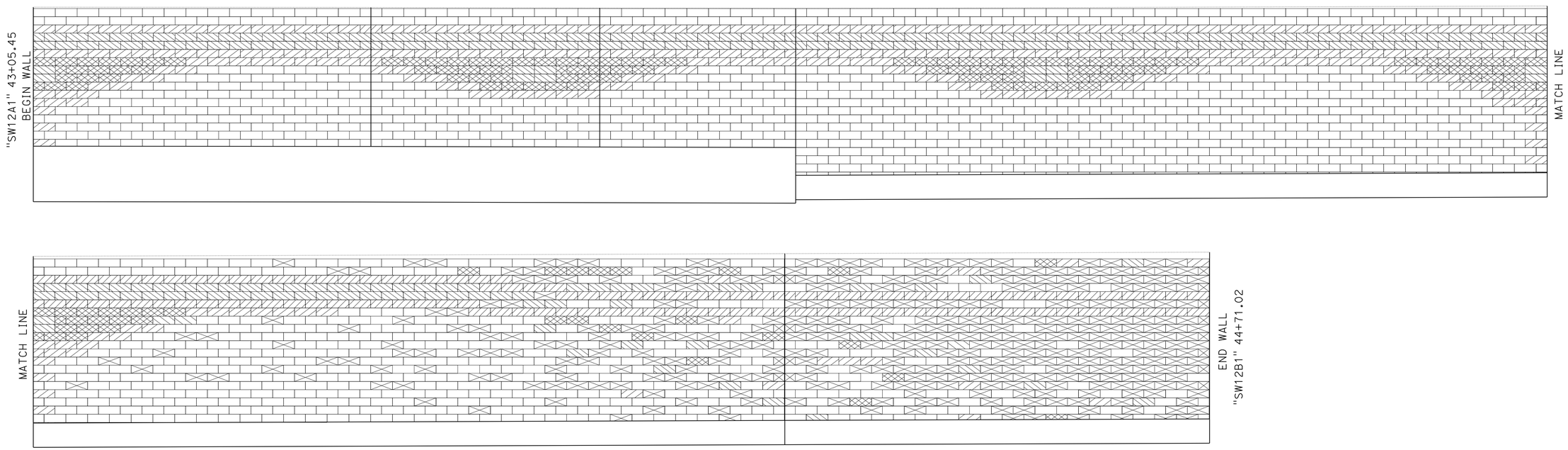

2 ADDED PER ADDENDUM No. 2 DATED AUGUST 7, 2009

SOUND WALL SW12
SOUND WALL DETAILS

NO SCALE

SW-165C

REVISED BY | DATE REVISED

CALCULATED-DESIGNED BY | CHECKED BY

SENIOR LANDSCAPE ARCHITECT
KENNETH MURRAY

STATE OF CALIFORNIA - DEPARTMENT OF TRANSPORTATION
Caltrans

LAST REVISION 00-00-00 | DATE PLOTTED => 05-AUG-2009 | TIME PLOTTED => 14:05