Dist	COUNTY	ROUTE	POST MILES TOTAL PROJECT	SHEET No.	TOTAL SHEETS
03	Pla	65	R4.8/R12.2	26	69

REGISTERED CIVIL ENGINEER 6-18-15 DATE

6-22-15
PLANS APPROVAL DATE

REGISTERED PROFESSIONAL ENGINEER JOHN R. KEBER No. 40048 Exp. 12-31-15 CIVIL STATE OF CALIFORNIA

THE STATE OF CALIFORNIA OR ITS OFFICERS OR AGENTS SHALL NOT BE RESPONSIBLE FOR THE ACCURACY OR COMPLETENESS OF SCANNED COPIES OF THIS PLAN SHEET.

OVERHEAD SIGN QUANTITIES

SIGN NUMBER	SHEET NUMBER	FURNISH SIGN STRUCTURE (TRUSS)	INSTALL SIGN STRUCTURE (TRUSS)	54" CIDH CONCRETE PILE (SIGN FOUNDATION)	60" CIDH CONCRETE PILE (SIGN FOUNDATION)	2 VEGETATION CONTROL (MINOR CONCRETE) *	MODIFY SIGN STRUCTURE (SAFETY CABLE RETROFIT)	REMOVE SIGN STRUCTURE	INSTALL SIGN PANEL ON EXISTING FRAME	
									PANEL SIZE	PANEL AREA
		LB	LB	LF	LF	SQYD	EA	EA		SQFT
DSN-22	S-1	11,840	11,840	19		7.1				
DS-148	S-1	544				5.1	1		288" x 100"	200.00
DS-149 (Exist)	S-2							1		
DS-149	S-2	12,160	12,160	19		7.1				
DS-131	S-2					4.9			288" x 100"	200.00
DS-150 (Exist)	S-2							1		
DS-150	S-2	21,900	21,900		25	7.7				
DS-132	S-2					8.8			288" x 70" 252" x 70"	140.00 122.50
DSN-23	S-3	15,890	15,890		22	7.7				
DS-137	S-3					4.5			324" x 70"	157.50
SUBTOTAL						52.9			———	
TOTAL		62,334	61,790	38	47	———	1	2	———	820.00

NOTES:

1. OVERHEAD SIGN PANELS SHALL BE LAMINATED PANELS TYPE A.
2. * SEE SUMMARY OF QUANTITIES SHEETS FOR PROJECT TOTALS.

ROADSIDE SIGN QUANTITIES

SIGN NUMBER (SHT-No.)	SIGN CODE	PANEL SIZE	"C" DIM IN FEET	POST SIZE AND LENGTH	ROADSIDE SIGN TWO POST
		INCHES		6"x8"	EA
1-1	G86-1<CA>	162" x 54"	7	18'	1
TOTAL					1

NOTES:

1. EXACT LOCATION AND POSITION OF ROADSIDE SIGNS TO BE DETERMINED BY THE ENGINEER.
2. POST LENGTHS GIVEN ARE APPROXIMATE.
3. "C" DIM = VERTICAL CLEARANCE EP TO BOTTOM OF SIGN PANEL.
4. ALL SIGN CODES SHOWN ARE FEDERAL SIGN CODES UNLESS OTHERWISE DESIGNATED AS A CALIFORNIA SIGN CODE.
5. <CA> = CALIFORNIA SIGN CODE.

2 REPLACED PER ADDENDUM No. 2 DATED OCTOBER 19, 2015

SIGN QUANTITIES

SQ-1

STATE OF CALIFORNIA - DEPARTMENT OF TRANSPORTATION
Caltrans
TRAFFIC

FUNCTIONAL SUPERVISOR: NARAYAN SELWAL
CALCULATED-DESIGNED BY: JACK KEMMERLY
CHECKED BY: JOHN KEBER
REVISED BY
DATE REVISED

LAST REVISION 6-18-15
DATE PLOTTED => 19-OCT-2015
TIME PLOTTED => 10:33

Dist	COUNTY	ROUTE	POST MILES TOTAL PROJECT	SHEET No.	TOTAL SHEETS
03	Pla	65	R4.8/R12.2	28	69

REGISTERED CIVIL ENGINEER 6/9/15 DATE

6-22-15
PLANS APPROVAL DATE

REGISTERED PROFESSIONAL ENGINEER SANFORD WONG No. C66784 Exp. 9/30/16 CIVIL STATE OF CALIFORNIA

THE STATE OF CALIFORNIA OR ITS OFFICERS OR AGENTS SHALL NOT BE RESPONSIBLE FOR THE ACCURACY OR COMPLETENESS OF SCANNED COPIES OF THIS PLAN SHEET.

Wood Rodgers Inc.
3301 C Street, Bldg 100-B
Sacramento, CA 95816

NOTE:
1. POST MILE LOCATIONS ARE APPROXIMATE.

MIDWEST GUARDRAIL SYSTEM

GUARDRAIL #	POST MILE TO POST MILE	DIRECTION	MIDWEST GUARDRAIL SYSTEM (7' WOOD POST) (LF)	ALTERNATIVE FLARED TERMINAL SYSTEM (EA)	ALTERNATIVE IN-LINE TERMINAL SYSTEM (EA)	OBJECT MARKER (TYPE L-1) (EA)	TRANSITION RAILING (TYPE WB-31) (EA)	TRANSITION RAILING (TYPE DTB) (EA)	END ANCHOR ASSEMBLY (TYPE SFT) (EA)	END CAP (TYPE TC) (N) (EA)	VEGETATION CONTROL (MINOR CONCRETE) (SQYD) 2	MGS LAYOUT TYPE (N)	DESCRIPTION
1	R5.0 TO R5.014	NB OUTSIDE	31.25		1	1					~~25~~ 36	12A	EAST ROSEVILLE VIADUCT
2	R5.0 TO R5.014	NB MEDIAN						1		1	~~8~~ 12	25A	EAST ROSEVILLE VIADUCT
3	R6.580 TO R6.954	NB OUTSIDE	31.25		1	1			1		~~25~~ 45	16A	PLEASANT GROVE BOULEVARD OVERHEAD SIGN
4	R6.75 TO R6.764	NB OUTSIDE	50		1	1			1		~~33~~ 55	16A	CULVERT CROSSING PRIOR TO PLEASANT GROVE EXIT RAMP
5	R6.780 TO R6.794	NB OUTSIDE	31.25		1	1			1		~~25~~ 45	16A	PLEASANT GROVE BOULEVARD OVERHEAD SIGN NEAR EXIT RAMP
6	R7.210 TO R7.224	NB OUTSIDE	31.25	1		1			1		~~25~~ 60	16B	BLUE OAKS Blvd/WASHINGTON Blvd OVERHEAD SIGN
7	R7.631 TO R7.645	NB OUTSIDE	31.25	1		1			1		~~25~~ 60	16B	BLUE OAKS Blvd/WASHINGTON Blvd OVERHEAD SIGN NEAR EXIT RAMP
8	M8.300 TO M8.317	NB OUTSIDE	31.25	1		1			1		~~29~~ 60	16B	SUNSET BOULEVARD OVERHEAD SIGN; EXIT 311
9	R8.708 TO R8.770	NB MEDIAN						1		1	~~8~~ 12	25A	PLEASANT GROVE CREEK BRIDGE
10	R8.760 TO R8.772	NB OUTSIDE	25	1		1	1			1	~~21~~ 60	12B	PLEASANT GROVE CREEK BRIDGE
11	R9.000 TO R9.019	NB OUTSIDE	56.25	1		1			1		~~33~~ 75	16B	SUNSET BOULEVARD OVERHEAD SIGN
12	R9.242 TO R9.261	NB OUTSIDE	56.25	1					1		~~33~~ 75	16B	SUNSET BOULEVARD OVERHEAD SIGN NEAR EXIT RAMP
13	R9.880 TO R9.892	NB OUTSIDE			1	1	1			1	~~21~~ 35	12B	CULVERT CROSSING APPROACH AFTER SUNSET BOULEVARD INTERCHANGE
14	R9.896 TO R9.905	NB OUTSIDE	25				1		1	1	~~20~~ 35		CULVERT CROSSING DEPARTURE AFTER SUNSET BOULEVARD INTERCHANGE
15	R11.2 TO R11.210	NB OUTSIDE	50	1		1			1		~~34~~ 70	11B	CULVERT CROSSING PRIOR TO TWELVE BRIDGES DRIVE INTERCHANGE
16	R11.594 TO R11.608	NB OUTSIDE	43.75	1		1			1		~~25~~ 65	16B	TWELVE BRIDGES DRIVE OVERHEAD SIGN NEAR EXIT RAMP
17	R4.8 TO R4.807	SB MEDIAN						1		1	~~8~~ 12	25A	ROUTE 65/80 SEPARATION APPROACH
18	R4.8 TO R4.8104	SB OUTSIDE	31.25	1		1					~~25~~ 50	12B	ROUTE 65/80 SEPARATION APPROACH
19	R4.897 TO R4.911	SB OUTSIDE	31.25			1	1		1	1	~~25~~ 35	12C	ROSEVILLE PARKWAY VIADUCT APPROACH
20	R4.898 TO R4.912	SB MEDIAN						1		1	~~8~~ 12	25A	ROSEVILLE PARKWAY VIADUCT APPROACH
21	R5.63 TO R5.6407	SB OUTSIDE	31.25		1	1			1		~~25~~ 45	16A	ROUTE 65/80 SEPARATION SIGN; SACRAMENTO/RENO
22	R7.447 TO R7.461	SB OUTSIDE	31.25	1		1			1		~~25~~ 60	16B	PLEASANT GROVE BOULEVARD OVERHEAD SIGN NEAR EXIT RAMP; SHIFT 15 FT PER SIGN PLANS
23	R7.709 TO R7.723	SB OUTSIDE	31.25	1		1			1		~~25~~ 60	16B	PLEASANT GROVE BOULEVARD OVERHEAD SIGN; SHIFT 15 FT PER SIGN PLANS
24	R8.511 TO R8.523	SB OUTSIDE	25	1		1			1		~~21~~ 55	16B	BLUE OAKS BOULEVARD/WASHINGTON BOULEVARD OVERHEAD SIGN NEAR EXIT RAMP
25	R8.748 TO R8.760	SB OUTSIDE		1		1	1			1	~~21~~ 50	12B	PLEASANT GROVE CREEK APPROACH
26	R8.745 TO R8.757	SB MEDIAN		1		1		1		1	~~21~~ 50	12B	PLEASANT GROVE CREEK APPROACH
27	R8.974 TO R8.993	SB OUTSIDE	56.25	1		1			1		~~34~~ 75	16B	BLUE OAKS Blvd/WASHINGTON Blvd/PLEASANT GROVE Blvd OVERHEAD SIGN
28	R9.879 TO R9.905	SB OUTSIDE	93.75	1		1			1		~~45~~ 90	16B	SUNSET BOULEVARD OVERHEAD SIGN NEAR EXIT RAMP
29	R10.131 TO R10.150	SB OUTSIDE	56.25	1		1			1		~~34~~ 75	16B	SUNSET BOULEVARD OVERHEAD SIGN
2 OVERHEAD SIGN QUANTITIES											52.9		
TOTAL			881.25	17	6	23	5	5	19	10	~~707~~ 1521.9		

a Std PLAN RSP A77U1, DIRECTION OF TRAFFIC, NOTE 3, IS REVERSED

b Std PLAN RSP A77U1, METAL BEAM GUARD RAILING CONNECTION TO BRIDGE RAILINGS, USE CONNECTION DETAIL BB, END CAP (TYPE A)

2 REPLACED PER ADDENDUM No. 2 DATED OCTOBER 19, 2015

SUMMARY OF QUANTITIES
Q-1

STATE OF CALIFORNIA - DEPARTMENT OF TRANSPORTATION
Caltrans
CONSULTANT FUNCTIONAL SUPERVISOR: MARK RAYBACK
CALCULATED-DESIGNED BY: SANFORD WONG
CHECKED BY: ALI HEMMATI
REVISED BY / DATE REVISED

LAST REVISION 6-9-15
DATE PLOTTED => 19-OCT-2015
TIME PLOTTED => 10:35

Dist	COUNTY	ROUTE	POST MILES TOTAL PROJECT	SHEET No.	TOTAL SHEETS
03	Pla	65	R4.8/R12.2	69A	69

Randell D. Hiatt
REGISTERED CIVIL ENGINEER

July 19, 2013
PLANS APPROVAL DATE

REGISTERED PROFESSIONAL ENGINEER
Randell D. Hiatt
No. C50200
Exp. 6-30-15
CIVIL
STATE OF CALIFORNIA

THE STATE OF CALIFORNIA OR ITS OFFICERS OR AGENTS SHALL NOT BE RESPONSIBLE FOR THE ACCURACY OR COMPLETENESS OF SCANNED COPIES OF THIS PLAN SHEET.

TO ACCOMPANY PLANS DATED 6-22-15

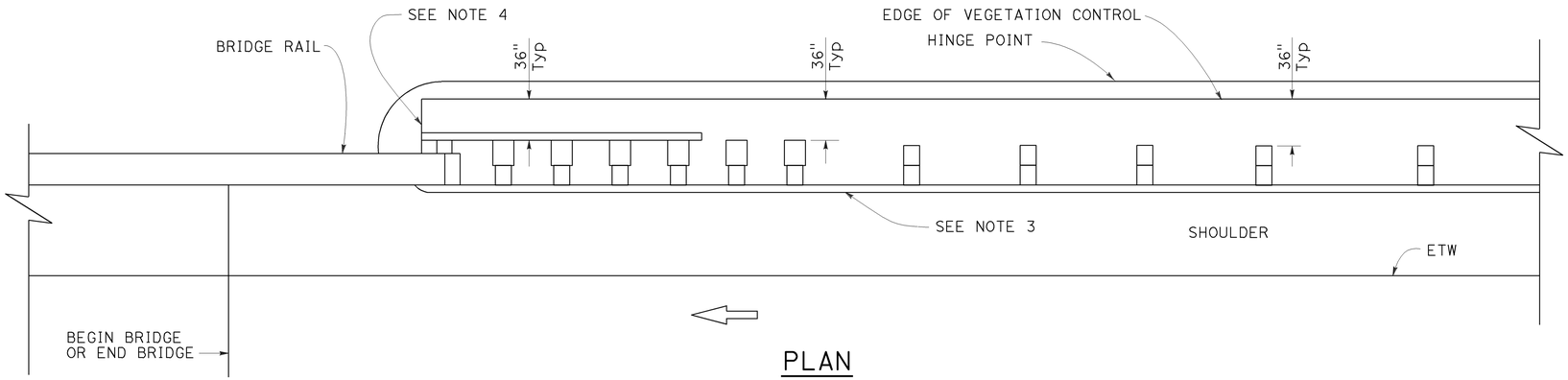

PLAN

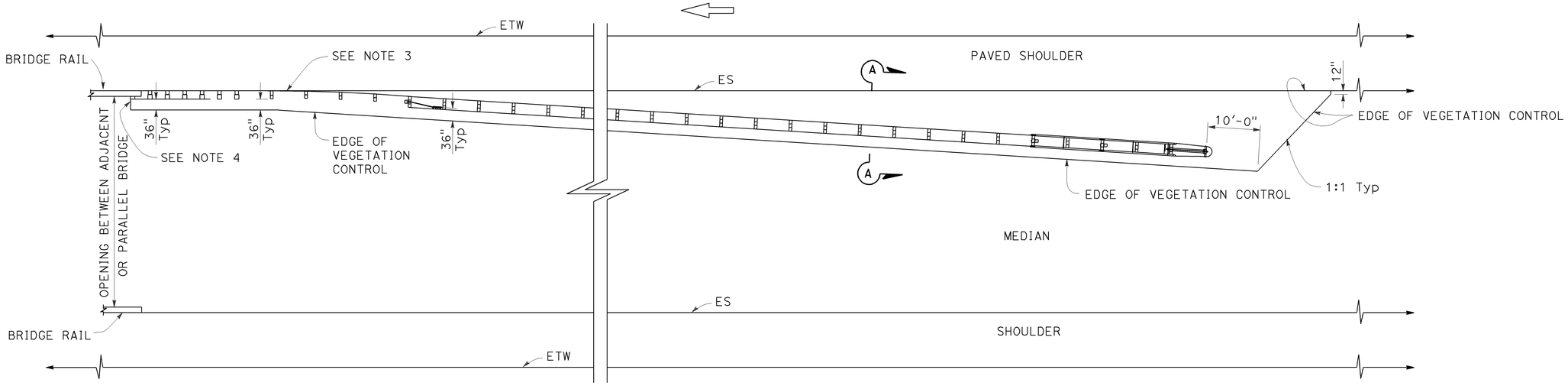

PLAN

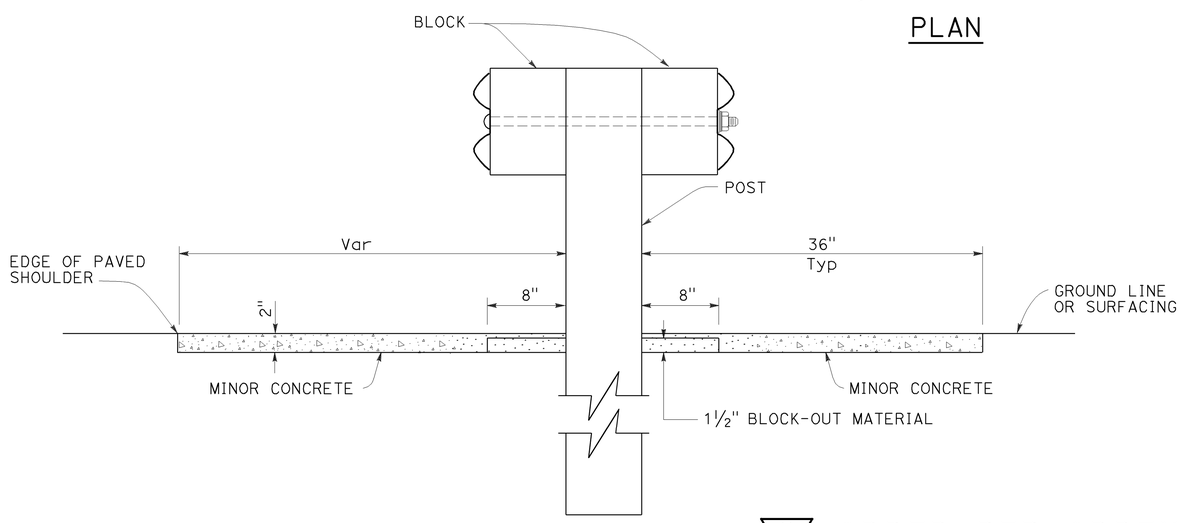

SECTION A-A

2 **ADDED PER ADDENDUM No. 2 DATED OCTOBER 19, 2015**

NOTES:

1. See Revised Standard Plan RSP A77N5 for additional vegetation control details.
2. Where the distance between back of post and hinge point is less than 42", construct vegetation control to 6" from hinge point while maintaining the 8" block-out at back of post. If the 8" block-out at back of post can not be maintained, construct vegetation control flush with the back edge of post.
3. Where dike is constructed under railing, construct vegetation control to back edge of dike. Where paved shoulder is constructed within 36" in front of the post, construct vegetation control to the edge of paved shoulder.
4. End vegetation control at end of backside rail element.

STATE OF CALIFORNIA
DEPARTMENT OF TRANSPORTATION

MIDWEST GUARDRAIL SYSTEM TYPICAL VEGETATION CONTROL AT STRUCTURE APPROACH

NO SCALE

RSP A77N7 DATED JULY 19, 2013 SUPPLEMENTS THE STANDARD PLANS BOOK DATED 2010.

REVISED STANDARD PLAN RSP A77N7

2010 REVISED STANDARD PLAN RSP A77N7

6-12-13

Dist	COUNTY	ROUTE	POST MILES TOTAL PROJECT	SHEET No.	TOTAL SHEETS
03	Pla	65	R4.8/R12.2	69B	69

Randell D. Hiatt
REGISTERED CIVIL ENGINEER

November 15, 2013
PLANS APPROVAL DATE

REGISTERED PROFESSIONAL ENGINEER
Randell D. Hiatt
No. C50200
Exp. 6-30-15
CIVIL
STATE OF CALIFORNIA

THE STATE OF CALIFORNIA OR ITS OFFICERS OR AGENTS SHALL NOT BE RESPONSIBLE FOR THE ACCURACY OR COMPLETENESS OF SCANNED COPIES OF THIS PLAN SHEET.

TO ACCOMPANY PLANS DATED 6-22-15

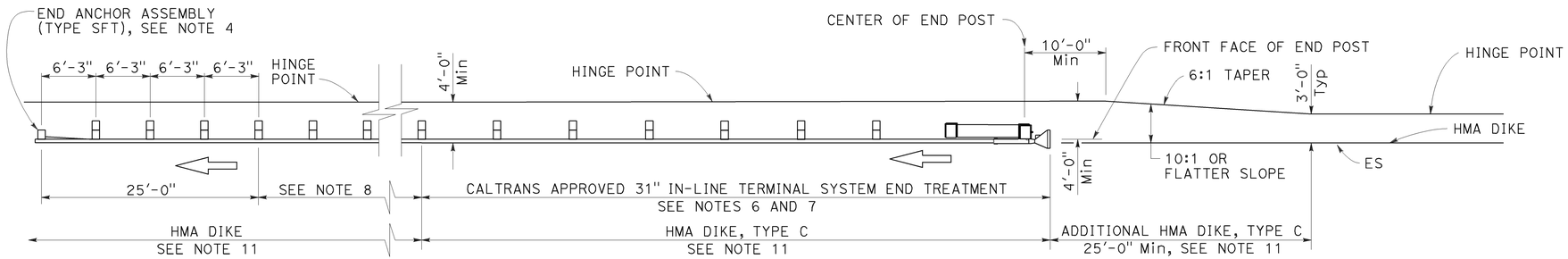

TYPE 11A LAYOUT

(Embankment MGS installation with 31" in-line end treatment at traffic approach end of railing) see Note 5

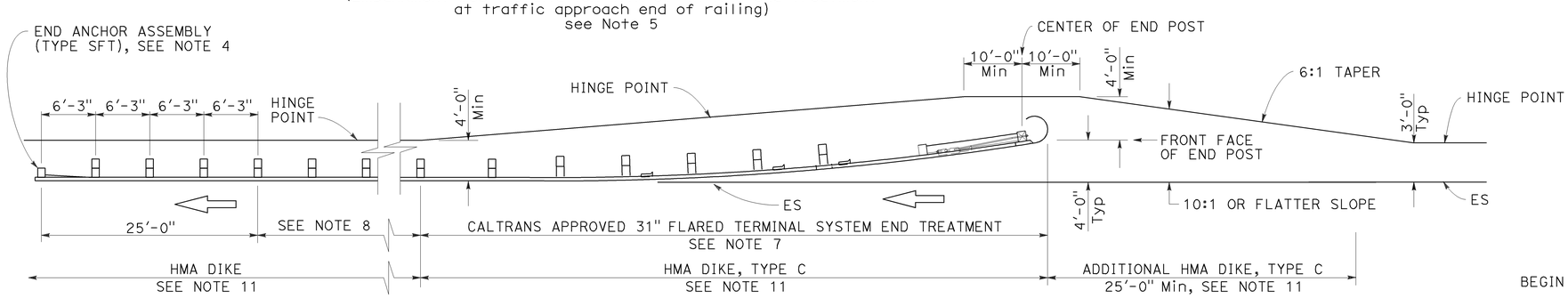

TYPE 11B LAYOUT

(Embankment MGS installation with 31" flared end treatment at traffic approach end of railing) see Note 5

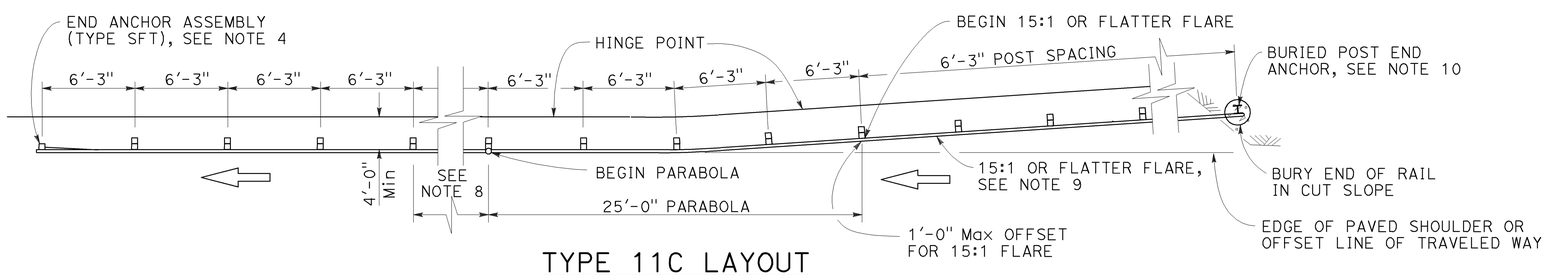

TYPE 11C LAYOUT

(Embankment MGS installation with buried end anchor treatment at traffic approach end of railing) see Notes 5 and 11

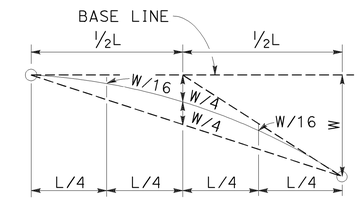

TYPICAL PARABOLIC LAYOUT

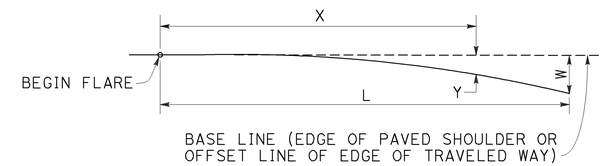

$$Y = \frac{WX^2}{L^2}$$

Y = OFFSET FROM BASE LINE
W = MAXIMUM OFFSET
X = DISTANCE ALONG BASE LINE
L = LENGTH OF FLARE

PARABOLIC FLARE OFFSETS

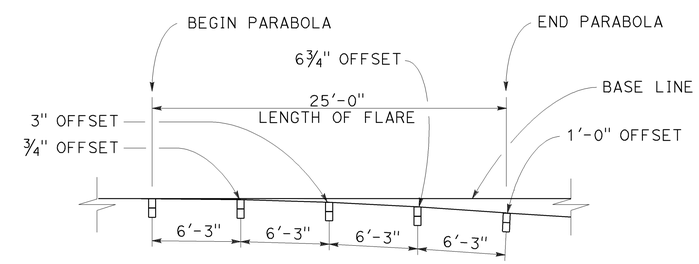

TYPICAL FLARE OFFSETS FOR 1 FOOT Max END OFFSET

STATE OF CALIFORNIA
DEPARTMENT OF TRANSPORTATION

MIDWEST GUARDRAIL SYSTEM TYPICAL LAYOUTS FOR EMBANKMENTS

NO SCALE

RSP A77P1 DATED NOVEMBER 15, 2013 SUPERSEDES RSP A77P1 DATED JULY 19, 2013 THAT SUPPLEMENTS THE STANDARD PLANS BOOK DATED 2010.

REVISED STANDARD PLAN RSP A77P1

2010 REVISED STANDARD PLAN RSP A77P1

NOTES:

1. Line post, blocks and hardware to be used are shown on Revised Standard Plans RSP A77L1, RSP A77L2, RSP A77M1, RSP A77N1 and RSP A77N2.
2. MGS post spacing to be 6'-3" center to center, except as otherwise noted.
3. Except as noted, line posts are 6" x 8" x 6'-0" wood with 6" x 12" x 1'-2" wood blocks. W6 x 8.5 or W6 x 9 steel posts, 6'-0" in length, with 6" x 12" x 1'-2" notched wood blocks or recycled plastic blocks may be used for 6" x 8" x 6'-0" wood post with 6" x 12" x 1'-2" wood blocks where applicable and when specified.
4. For End Anchor Assembly (Type SFT) details, see Revised Standard Plan RSP A77S1.
5. Layout Types 11A, 11B or 11C are typically used where MGS is recommended to shield embankment slopes and a crashworthy end treatment is required for only one direction of traffic.
6. 31" in-line terminal system end treatments are used where site conditions will not accommodate a flared end treatment.
7. The type of 31" terminal system end treatment to be used will be shown on the Project Plans.
8. Dependent on site conditions (embankment height and side slope), construction of additional MGS (length equal to multiples of 12'-6" with 6'-3" post spacing) may be advisable.
9. The 15:1 or flatter flare used with buried end anchors is based on the edge of the paved shoulder or offset line of edge of the traveled way. The length of MGS within the 15:1 or flatter flare is based on site conditions and should be a length equal to multiples of 12'-6".
10. For details of the buried post end anchor used with Type 11C Layout, see Revised Standard Plan RSP A77T2.
11. Where placement of dike is required with MGS installations, see Revised Standard Plan RSP A77N4 for dike positioning details.

2 ADDED PER ADDENDUM No. 2 DATED OCTOBER 19, 2015

10-4-13

Dist	COUNTY	ROUTE	POST MILES TOTAL PROJECT	SHEET No.	TOTAL SHEETS
03	Pla	65	R4.8/R12.2	69C	69

Randell D. Hiatt
REGISTERED CIVIL ENGINEER

August 14, 2015
PLANS APPROVAL DATE

REGISTERED PROFESSIONAL ENGINEER Randell D. Hiatt No. C50200 Exp. 6-30-17 CIVIL STATE OF CALIFORNIA

THE STATE OF CALIFORNIA OR ITS OFFICERS OR AGENTS SHALL NOT BE RESPONSIBLE FOR THE ACCURACY OR COMPLETENESS OF SCANNED COPIES OF THIS PLAN SHEET.

TO ACCOMPANY PLANS DATED 6-22-15

2010 REVISED STANDARD PLAN RSP A77Q1

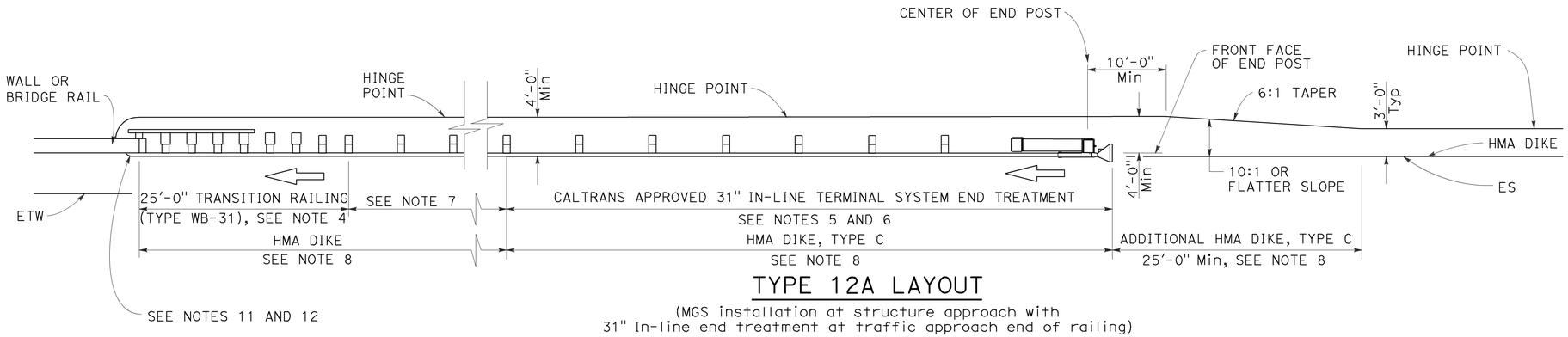

TYPE 12A LAYOUT

(MGS installation at structure approach with
31" In-line end treatment at traffic approach end of railing)
See Note 9

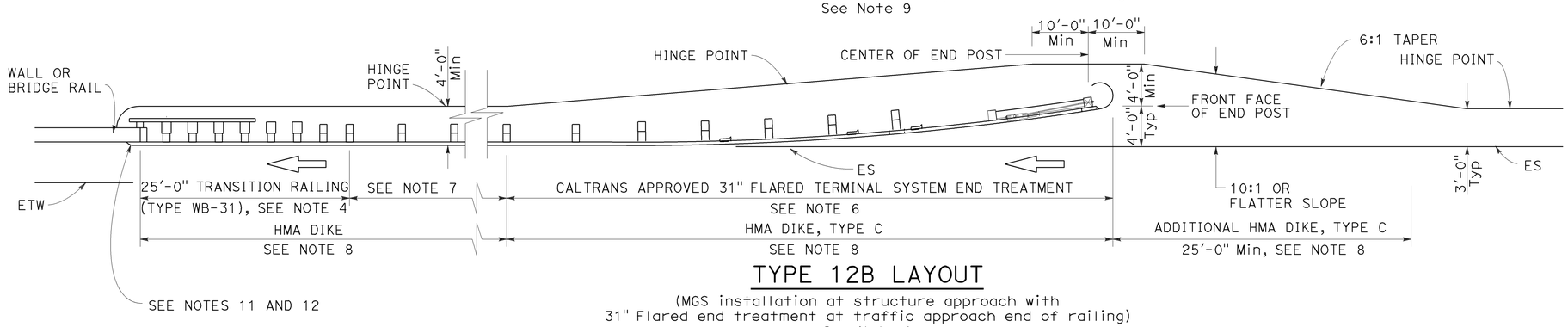

TYPE 12B LAYOUT

(MGS installation at structure approach with
31" Flared end treatment at traffic approach end of railing)
See Note 9

NOTES:

1. Line post, blocks and hardware to be used are shown on Revised Standard Plans RSP A77L1, RSP A77L2, RSP A77M1, RSP A77N1 and RSP A77N2.
2. MGS post spacing to be 6'-3" center to center, except as otherwise noted.
3. Except as noted, line posts are 6" x 8" x 6'-0" wood with 6" x 12" x 1'-2" wood blocks. W6 x 8.5 or W6 x 9 steel posts, 6'-0" in length, with 6" x 12" x 1'-2" notched wood blocks or plastic blocks may be used for 6" x 8" x 6'-0" wood posts with 6" x 12" x 1'-2" wood blocks where applicable and when specified.
4. For Transition Railing (Type WB-31) details for Types 12A and 12B Layouts, see Revised Standard Plan RSP A77U4.
5. 31" in-line terminal system end treatments are used where site conditions will not accommodate a 31" flared end treatment.
6. The type of 31" terminal system end treatment to be used will be shown on the Project Plans.
7. Dependent on site conditions (embankment height, side slopes, or other fixed objects), it may be advisable to construct additional guard railing (a length equal to multiples of 12'-6" with 6'-3" post spacing) between the transition railing and end treatment. A 12.5 degree angle of departure can be drawn on the Project Plans from the edge of traveled way through the outer most point of the fixed object to determine the additional length of railing needed.
8. Where placement of dike is required with guard railing installations, see Revised Standard Plan RSP A77N4 for dike positioning details.
9. Type 12A or Type 12B Layouts are typically used:
   a. To the right of approaching traffic, at the end of a structure, on two-lane conventional highway where the roadbed width across the structure is less than 40 feet.
   b. To the left of approaching traffic, at the end of a structure, on two-lane conventional highway where the roadbed width across the structure is less than 40 feet.
   c. To the right of approaching traffic at the end of each structure on multilane freeways or expressways with separate adjacent or parallel bridges.
   d. To the right of approaching traffic at the end of the structure on multilane freeways or expressways with decked median on the bridge.
10. See Revised Standard Plan RSP A77Q3 for typical layout used left of approaching traffic at the ends of each structure on multilane freeways or expressways with separate adjacent or parallel bridges.
11. For additional details of typical connections to bridge rail, see Connection Detail AA on Revised Standard Plans RSP A77U1 and RSP A77U2 and Connection Detail FF on Revised Standard Plans RSP A77V1 and RSP A77V2.
12. For additional details of a typical connection to walls or abutments, see Revised Standard Plan RSP A77U3.

STATE OF CALIFORNIA
DEPARTMENT OF TRANSPORTATION

MIDWEST GUARDRAIL SYSTEM TYPICAL LAYOUTS FOR STRUCTURE APPROACH

NO SCALE

RSP A77Q1 DATED AUGUST 14, 2015 SUPERSEDES RSP A77Q1 DATED JULY 19, 2013 THAT SUPPLEMENTS THE STANDARD PLANS BOOK DATED 2010.

2 ADDED PER ADDENDUM No. 2 DATED OCTOBER 19, 2015

REVISED STANDARD PLAN RSP A77Q1

8-12-15

Dist	COUNTY	ROUTE	POST MILES TOTAL PROJECT	SHEET No.	TOTAL SHEETS
03	Pla	65	R4.8/R12.2	69D	69

Randell D. Hiatt
REGISTERED CIVIL ENGINEER

October 19, 2012
PLANS APPROVAL DATE

REGISTERED PROFESSIONAL ENGINEER
Randell D. Hiatt
No. C50200
Exp. 6-30-13
CIVIL
STATE OF CALIFORNIA

THE STATE OF CALIFORNIA OR ITS OFFICERS OR AGENTS SHALL NOT BE RESPONSIBLE FOR THE ACCURACY OR COMPLETENESS OF SCANNED COPIES OF THIS PLAN SHEET.

TO ACCOMPANY PLANS DATED 6-22-15

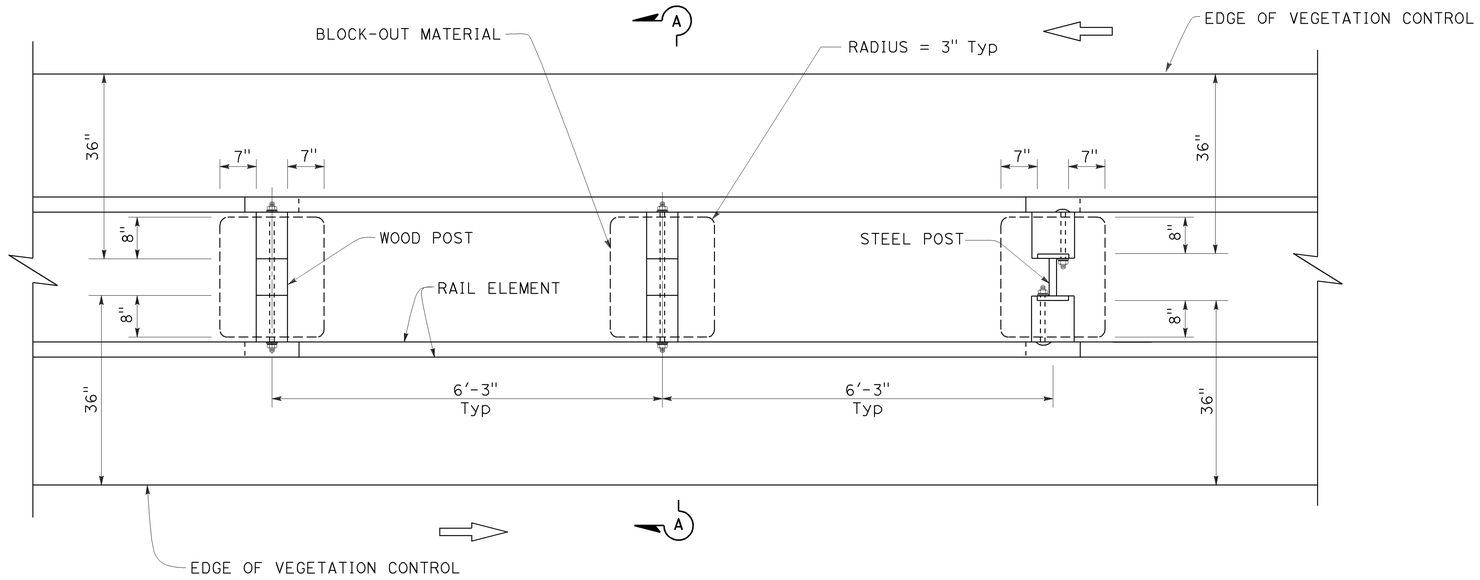

PLAN

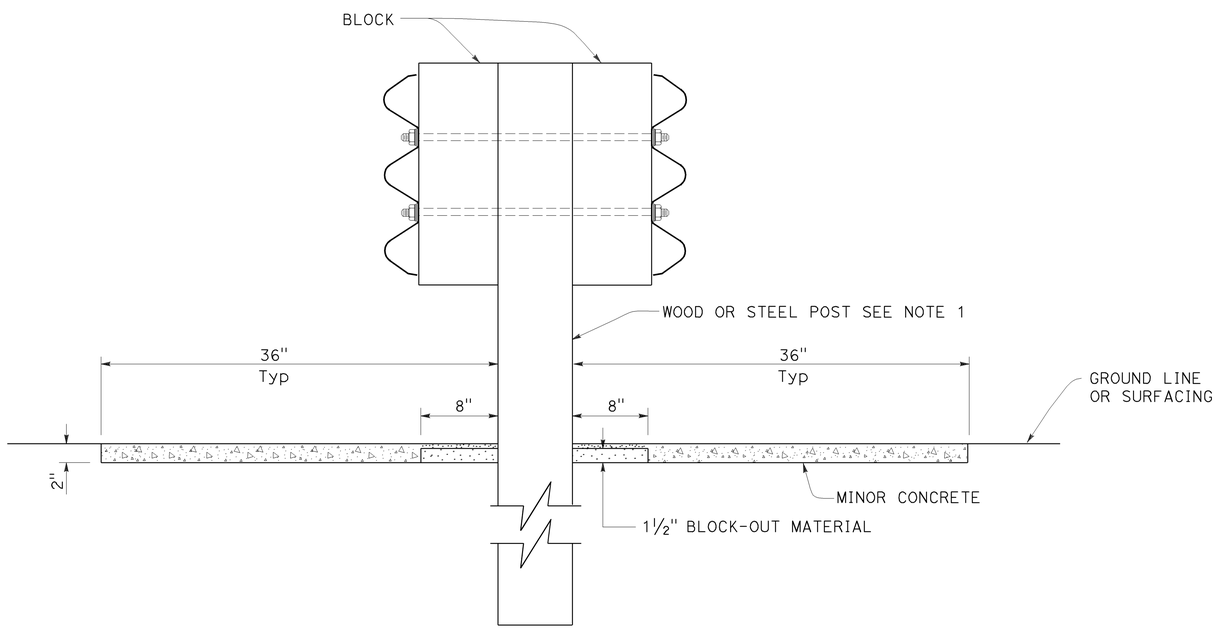

SECTION A-A

NOTES:

1. For wood and steel post sizes, see Standard Plan A78C2.
2. For details not shown, see Standard Plans A78A and A78B.

STATE OF CALIFORNIA
DEPARTMENT OF TRANSPORTATION

DOUBLE THRIE BEAM BARRIER TYPICAL VEGETATION CONTROL STANDARD BARRIER RAILING SECTION

NO SCALE

RSP A78C4 DATED OCTOBER 19, 2012 SUPERSEDES STANDARD PLAN A78C4 DATED MAY 20, 2011 - PAGE 94 OF THE STANDARD PLANS BOOK DATED 2010.

REVISED STANDARD PLAN RSP A78C4

2 **ADDED PER ADDENDUM No. 2 DATED OCTOBER 19, 2015**

2010 REVISED STANDARD PLAN RSP A78C4

9-26-12

Dist	COUNTY	ROUTE	POST MILES TOTAL PROJECT	SHEET No.	TOTAL SHEETS
03	Pla	65	R4.8/R12.2	69E	69

Randell D. Hiatt
REGISTERED CIVIL ENGINEER

October 19, 2012
PLANS APPROVAL DATE

REGISTERED PROFESSIONAL ENGINEER
Randell D. Hiatt
No. C50200
Exp. 6-30-13
CIVIL
STATE OF CALIFORNIA

THE STATE OF CALIFORNIA OR ITS OFFICERS OR AGENTS SHALL NOT BE RESPONSIBLE FOR THE ACCURACY OR COMPLETENESS OF SCANNED COPIES OF THIS PLAN SHEET.

TO ACCOMPANY PLANS DATED 6-22-15

2010 REVISED STANDARD PLAN RSP A78C6

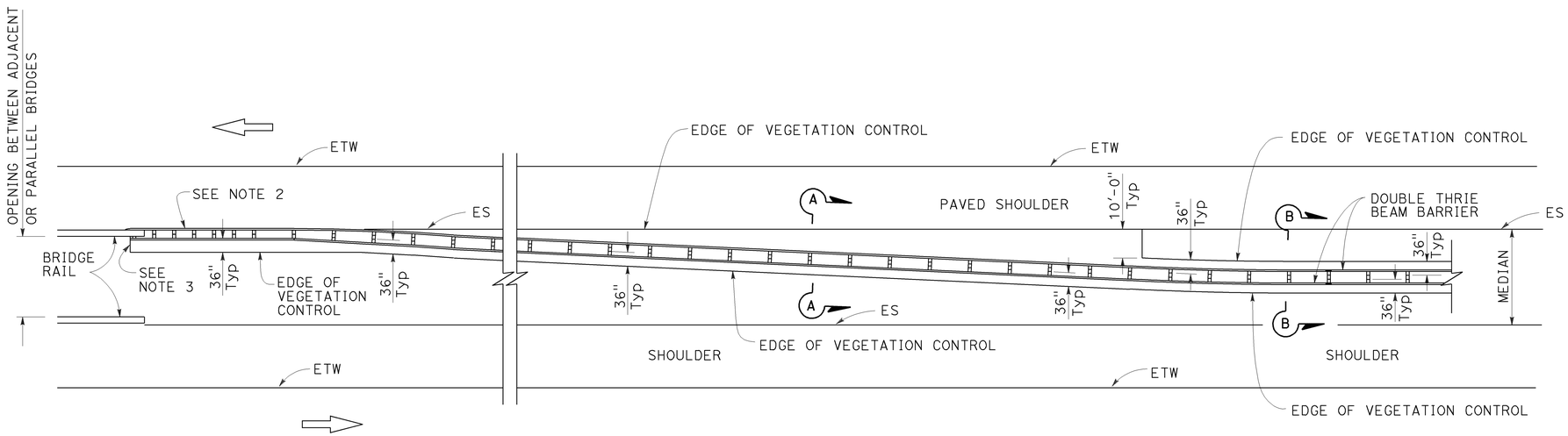

PLAN

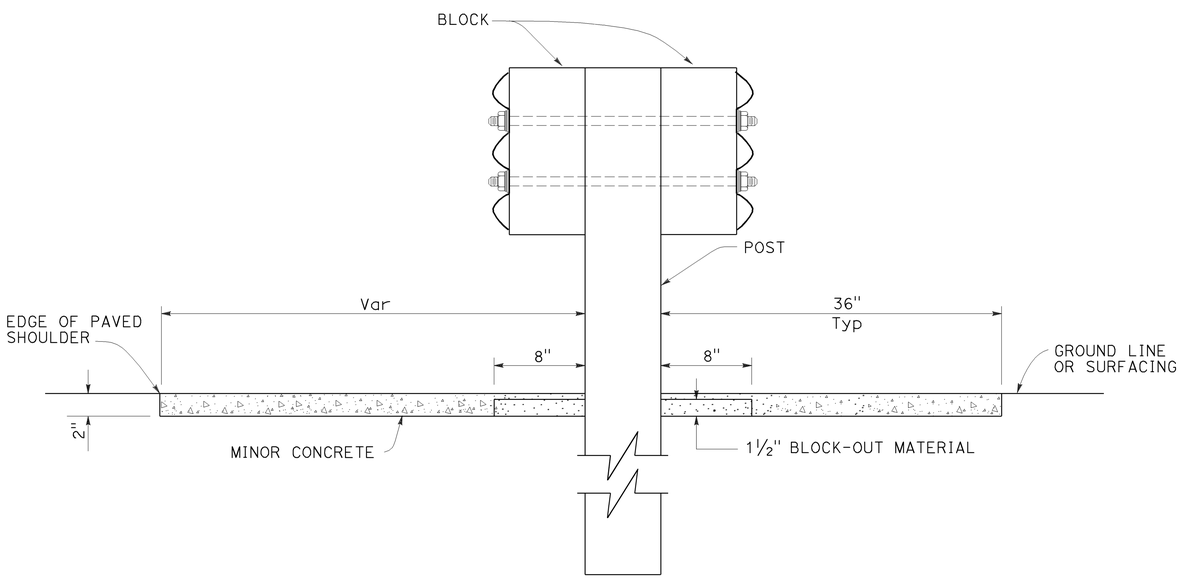

SECTION A-A

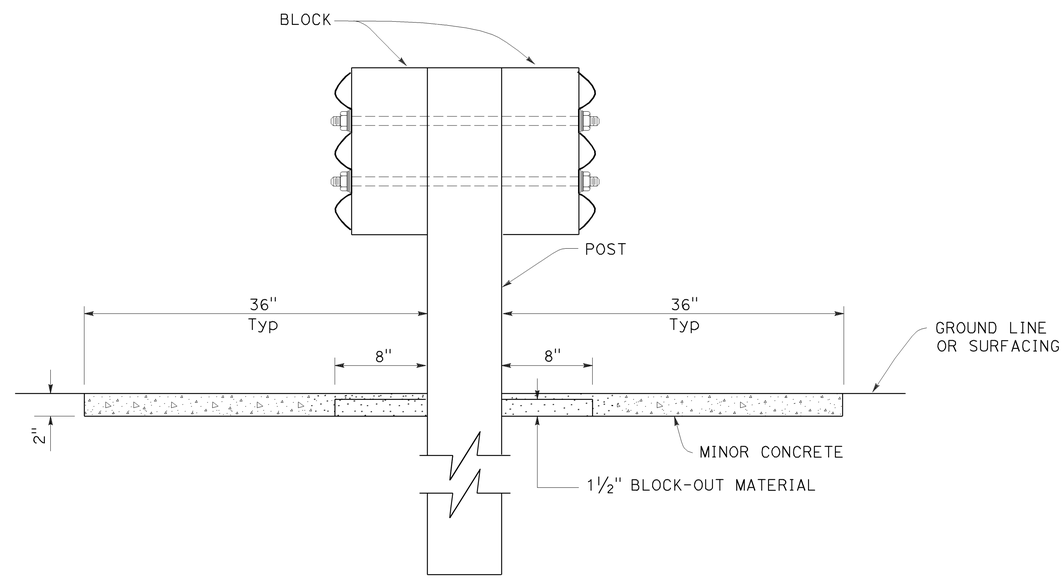

SECTION B-B

NOTES:

1. See Revised Standard Plan RSP A78C4 for additional vegetation control details.
2. Where dike is constructed under barrier, construct vegetation control to back edge of dike. Where paved shoulder is constructed within 36" in front of the post, construct vegetation control to the edge of paved shoulder.
3. End vegetation control at end of backside rail element attached to bridge railing.

STATE OF CALIFORNIA
DEPARTMENT OF TRANSPORTATION

THRIE BEAM BARRIER TYPICAL VEGETATION CONTROL AT STRUCTURE APPROACH

NO SCALE

RSP A78C6 DATED OCTOBER 19, 2012 SUPERSEDES STANDARD PLAN A78C6 DATED MAY 20, 2011 - PAGE 96 OF THE STANDARD PLANS BOOK DATED 2010.

2 ADDED PER ADDENDUM No. 2 DATED OCTOBER 19, 2015

REVISED STANDARD PLAN RSP A78C6

9-26-12

Dist	COUNTY	ROUTE	POST MILES TOTAL PROJECT	SHEET No.	TOTAL SHEETS
03	Pla	65	R4.8/R12.2	69F	69

Randell D. Hiatt
REGISTERED CIVIL ENGINEER

July 19, 2013
PLANS APPROVAL DATE

REGISTERED PROFESSIONAL ENGINEER
Randell D. Hiatt
No. C50200
Exp. 6-30-15
CIVIL
STATE OF CALIFORNIA

THE STATE OF CALIFORNIA OR ITS OFFICERS OR AGENTS SHALL NOT BE RESPONSIBLE FOR THE ACCURACY OR COMPLETENESS OF SCANNED COPIES OF THIS PLAN SHEET.

TO ACCOMPANY PLANS DATED 6-22-15

NOTES:

1. Line post, blocks and hardware to be used are shown on Standard Plans A78A, A78B and A78C1 and Revised Standard Plan RSP A78C2.
2. Post spacing to be 6'-3" center to center, except as otherwise noted.
3. Except as noted, line posts are 6" x 8" x 6'-0" wood with 6" x 8" x 1'-10" wood blocks. (W6 x 8.5 or W6 x 9) steel posts, 6'-8" in length, with 6" x 8" x 1'-10" notched wood blocks or notched recycled plastic blocks may be used for 6" x 8" x 6'-0" wood posts with 6" x 8" x 1'-10" wood blocks where applicable and when specified.
4. For Transition Railing (Type DTB) details, see Standard Plan A78K.
5. The 15:1 or flatter flare is measured off of the edge of traveled way.

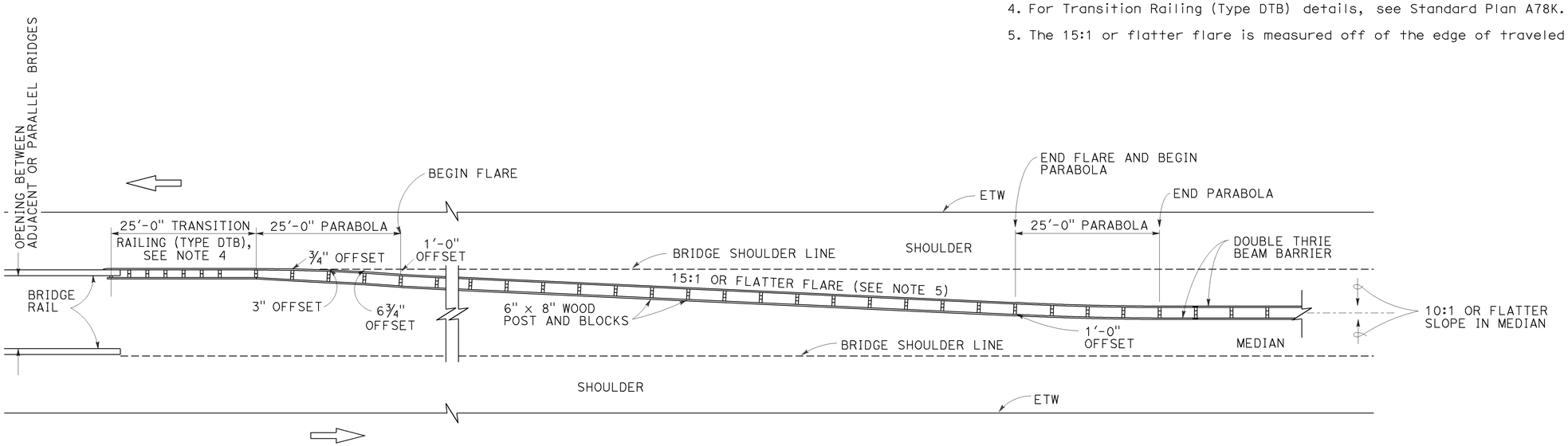

TYPE 25A CONNECTION LAYOUT

STATE OF CALIFORNIA
DEPARTMENT OF TRANSPORTATION

THRIE BEAM BARRIER TYPICAL LAYOUT FOR CONNECTION TO BRIDGE RAILING

NO SCALE

RSP A78H DATED JULY 19, 2013 SUPERSEDES STANDARD PLAN A78H DATED MAY 20, 2011 - PAGE 105 OF THE STANDARD PLANS BOOK DATED 2010.

REVISED STANDARD PLAN RSP A78H

2 ADDED PER ADDENDUM No. 2 DATED OCTOBER 19, 2015

2010 REVISED STANDARD PLAN RSP A78H

6-12-13