Dist	COUNTY	ROUTE	POST MILES TOTAL PROJECT	SHEET No.	TOTAL SHEETS
03	Pla, Nev	80	69.3/69.8 0.0/R2.3	2	30

Litton Wang 6-23-14
REGISTERED CIVIL ENGINEER DATE

6-23-14
PLANS APPROVAL DATE

REGISTERED PROFESSIONAL ENGINEER
LITTON LIDUN WANG
No. C 67615
Exp. 06/30/15
CIVIL
STATE OF CALIFORNIA

THE STATE OF CALIFORNIA OR ITS OFFICERS OR AGENTS SHALL NOT BE RESPONSIBLE FOR THE ACCURACY OR COMPLETENESS OF SCANNED COPIES OF THIS PLAN SHEET.

NOTE:

1. DIMENSIONS OF THE PAVEMENT STRUCTURES (STRUCTURAL SECTIONS) ARE SUBJECT TO TOLERANCES SPECIFIED IN THE STANDARD SPECIFICATIONS.

* VARIABLE DISTANCE FROM ES TO FL OF MINOR CONCRETE (GUTTER)

** VARIABLE SLOPE OF MINOR CONCRETE (GUTTER) FROM ES TO FL

2. SEE CONSTRUCTION DETAILS FOR ADDITIONAL UNDERDRAIN DETAILS
3. SEE LAYOUT FOR ALIGNMENT LINE NAME CHANGE
4. USE EXISTING PAVEMENT THICKNESS TO DETERMINE TIE BAR PLACEMENT

PAVEMENT CLIMATE REGION

HIGH MOUNTAIN

ABRREVIATION:

CTS - CEMENT TREATED SUBBASE

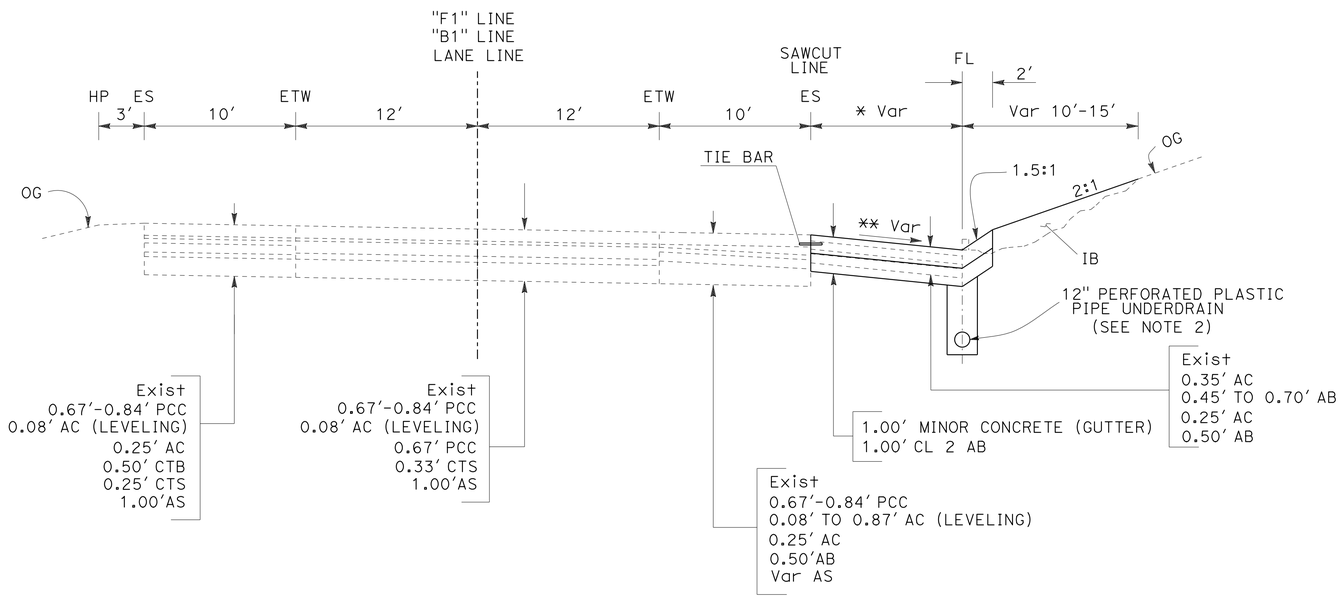

EASTBOUND ROUTE 80

1 Sta "F1" 437+70 TO "F1" 439+00 (* 10') (** 10:1)
Sta "F1" 439+00 TO "F1" 441+50 (* 10') (** 5:1)
Sta "F1" 441+50 TO "F1" 445+50 (* 10') (** 10:1)
Sta "F1" 445+50 TO "F1" 451+50 (* 10') (** 5:1)
Sta "F1" 451+50 TO "F1" 454+35.88 (* 10') (** 10:1)
Sta "B1" 1+37.15 TO "B1" 12+50 (* 10') (** 10:1)
Sta "B1" 16+84 TO "B1" 27+00 (* 8') (** 10:1)
Sta "B1" 60+45 TO "B1" 72+00 (* 6') (** 8:1)
Sta "B1" 72+00 TO "B1" 78+60 (* 8') (** 8:1)
Sta "B1" 86+00 TO "B1" 90+00 (* 6') (** 6:1)
Sta "B1" 96+00 TO "B1" 105+00 (* 6') (** 6:1)
(SEE NOTE 3)

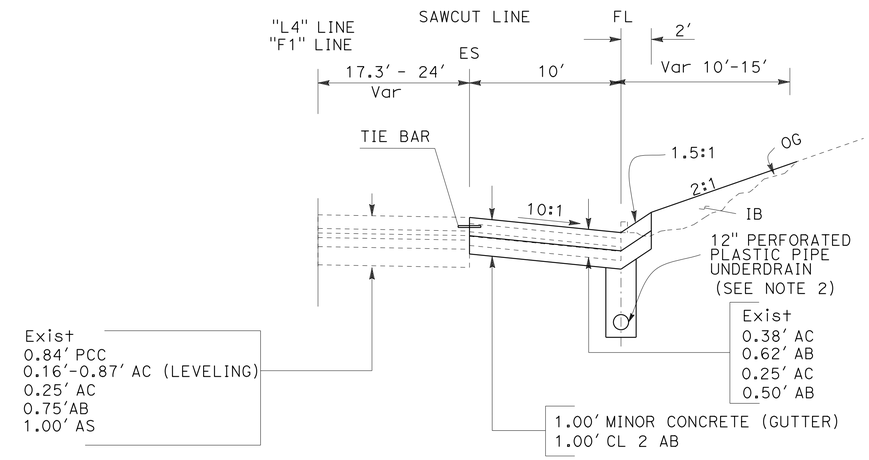

KINGVALE EASTBOUND ONRAMP

Sta "L4" 432+00 TO "F1" 437+70
(SEE NOTE 3)

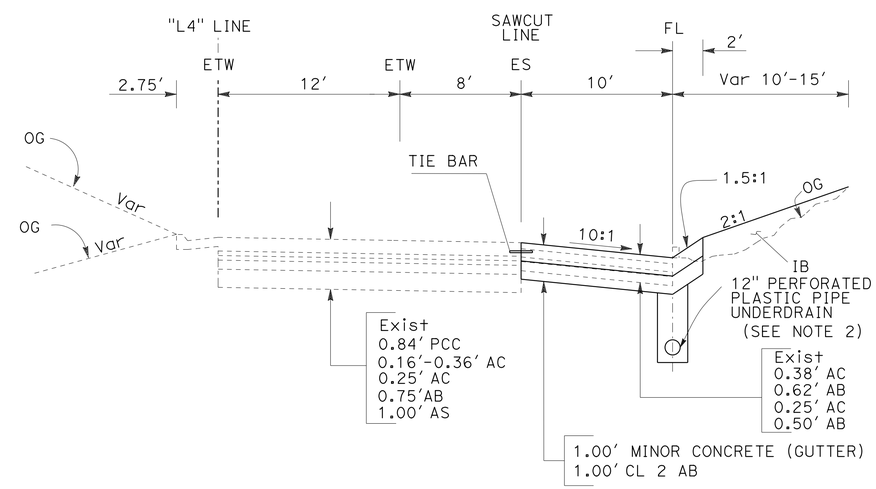

KINGVALE EASTBOUND ONRAMP

Sta "L4" 425+00 TO "L4" 432+00

1 **REPLACED PER ADDENDUM No. 1 DATED OCTOBER 1, 2014**

TYPICAL CROSS SECTIONS

NO SCALE

X-1

REVISED BY	DATE REVISED

CALCULATED-DESIGNED BY	CHECKED BY
DAC LE	LITTON WANG

FUNCTIONAL SUPERVISOR: KEN KEATON

STATE OF CALIFORNIA - DEPARTMENT OF TRANSPORTATION
Caltrans
NORTH REGION
DIVISION OF ENGINEERING

LAST REVISION 00-00-00
DATE PLOTTED => 29-SEP-2014
TIME PLOTTED => 13:25

Dist	COUNTY	ROUTE	POST MILES TOTAL PROJECT	SHEET No.	TOTAL SHEETS
03	Pla, Nev	80	69.3/69.8 0.0/R2.3	17	30

Litton Wang 6-23-14
REGISTERED CIVIL ENGINEER DATE

6-23-14
PLANS APPROVAL DATE

REGISTERED PROFESSIONAL ENGINEER LITTON LIDUN WANG No. C 67615 Exp 06/30/15 CIVIL STATE OF CALIFORNIA

THE STATE OF CALIFORNIA OR ITS OFFICERS OR AGENTS SHALL NOT BE RESPONSIBLE FOR THE ACCURACY OR COMPLETENESS OF SCANNED COPIES OF THIS PLAN SHEET.

ROADWAY ITEMS

STATION LIMITS	1 ROADWAY EXCAVATION	CLASS 2 AGGREGATE BASE	MINOR CONCRETE (GUTTER)	1 IMPORTED BORROW	DRILL AND BOND (TIE BAR)	JOINT SEAL: SEAL PAVEMENT JOINT (TRANSVERSE)	JOINT SEAL: SEAL PAVEMENT JOINT (LONGITUDINAL)
	CY	CY	CY	CY	EA	LF	LF
"L4" 425+00 TO "L4" 432+00	742	317	317	7	250	600	700
"L4" 432+00 TO "L4" 435+00	353	136	136	0	105	257	300
"L4" 435+00 TO "F1" 437+70	279	122	122	0	100	231	270
"F1" 437+70 TO "F1" 454+35.88	1872	758	758	18	595	1,428	1,666
"B1" 1+37 TO "B1" 12+50	992	506	506	316	395	954	1,113
"B1" 16+84 TO "B1" 27+00	744	387	387	76	365	726	1,016
"B1" 60+45 TO "B1" 72+00	633	352	352	239	410	660	1,155
"B1" 72+00 TO "B1" 78+60	478	253	253	25	235	471	660
"B1" 86+00 TO "B1" 90+00	252	122	122	126	145	229	400
"B1" 96+00 TO "B1" 105+00	549	279	279	104	320	514	900
SUBTOTAL						6,070	8,180
TOTAL	6,894	3,232	3,232	911	2,920	14,250	

REMOVE AC DIKE (N)

STATION LIMITS	LF
"L4" 425+00 TO "L4" 435+00	1,000
"F1" 435+00 TO "F1" 441+55	655
"F1" 441+65 TO "F1" 451+60	995
"F1" 451+70 TO "F1" 454+35.88	266
"B1" 1+37.15 TO "B1" 8+11	674
"B1"8+41 TO "B1" 12+50	409
"B1" 16+84 TO "B1" 27+00	1,016
"B1" 60+45 TO "B1" 78+60	1,815
"B1" 86+00 TO "B1" 90+00	400
"B1" 96+00 TO "B1" 105+00	900
TOTAL	8,130

TEMPORARY DRAINAGE INLET PROTECTION

STATION	OSD OR DI	EA
"F1" 441+60	OSD	1
"F1" 450+65	OSD	1
"F1" 452+45	DI	1
"B1" 3+32	DI	1
"B1" 8+29	OSD	1
"B1" 16+70	OSD	1
"B1" 26+00	DI	1
"B1" 72+00	DI	1
"B1" 85+90	OSD	1
"B1" 90+00	OSD	1
"B1" 95+82	OSD	1
"B1"103+30	DI	1
TOTAL		12

DRAINAGE ITEMS

STATION	ADJUST INLET	Misc IRON & STEEL	MINOR CONCRETE (Misc Const)	RSP (1/4 TON, METHOD B)
	EA	LB	CY	CY
"F1" 441+60			4.3	3.4
"F1" 450+65			4.9	3.4
"F1" 452+45	1	326		
"B1" 3+30	1	326		
"B1" 8+29			12.9	6.0
"B1" 16+70			10.8	5.6
"B1" 26+00	1	326		
"B1" 72+00	1	326		
"B1" 85+90			15.2	3.6
"B1" 90+00			5.0	2.4
"B1" 95+82			4.2	2.4
"B1"103+30	1	326		
TOTAL	5	1,630	57.3	26.8

ABANDON UNDERDRAIN

STATION LIMITS	ABANDON UNDERDRAIN	SAND BACKFILL (N)
	LF	CY
"L4" 425+00 TO "F1" 439+50	1450	19
"F1" 448+00 TO "F1" 452+38	438	6
"F1" 452+55 TO "B1" 3+32	376	5
"B1" 3+52 TO "B1" 4+29	77	1
TOTAL	2,341	31

12" PPP UNDERDRAIN

STATION LIMITS	LF
"L4" 425+14 TO "F1" 441+53	1,627.1
"F1" 441+60 TO "F1" 452+38	1,077.9
"F1" 452+60 TO "B1" 3+26	367.4
"B1" 3+48 TO "B1" 8+16	471.2
"B1" 8+29 TO "B1" 12+50	422.0
"B1"16+76 TO "B1" 27+00	1,023.8
"B1" 60+64 TO "B1" 71+85	1,102.6
"B1" 72+18 TO "B1" 78+60	641.6
"B1" 86+08 TO "B1" 90+00	395.7
"B1" 96+00 TO "B1" 103+20	723.0
"B1" 103+40 TO "B1" 105+00	160.0
TOTAL	8,012.3

12" PLASTIC PIPE

STATION LIMITS	LF
"L4" 425+00 TO "L4" 425+14	14.7
"F1" 441+56 TO "F1" 441+60	14.9
"F1" 452+48 TO "F1" 452+60	11.5
"B1" 3+36 TO "B1" 3+48	13.0
"B1" 8+16 TO "B1" 8+29	19.2
"B1" 16+70 TO "B1" 16+76	11.9
"B1" 60+45 TO "B1"60+64	19.2
"B1" 72+02 TO "B1" 72+18	15.8
"B1" 86+00 TO "B1"86+08	9.0
"B1" 95+82 TO "B1" 96+00	19.1
"B1" 103+32 TO "B1" 103+40	8.3
TOTAL	156.6

45 DEGREE ELBOW (N)

STATION	EA
"L4" 425+14	1
"F1" 441+60	1
"F1" 452+60	1
"B1" 3+48	1
"B1" 8+29	1
"B1"16+76	1
"B1" 60+64	1
"B1" 72+18	1
"B1" 86+08	1
"B1" 96+00	1
"B1" 103+40	1
TOTAL	11

TERMINAL RISER (N)

STATION	EA
"F1" 441+53	1
"F1" 452+38	1
"B1" 3+26	1
"B1" 8+16	1
"B1" 12+50	1
"B1" 27+00	1
"B1" 71+85	1
"B1" 78+60	1
"B1" 90+00	1
"B1" 103+20	1
"B1" 105+00	1
TOTAL	11

TEMPORARY BMP

STATION	TEMPORARY GRAVEL BAG BERM	TEMPORARY COVER
	LF	SQYD
"L4" 425+00 TO "B1" 105+00	2,000	2,330
TOTAL	2,000	2,330

(N) NOT A SEPARATE PAY ITEM, FOR INFORMATION ONLY.

1 REPLACED PER ADDENDUM No. 1 DATED OCTOBER 1, 2014

SUMMARY OF QUANTITIES

Q-1

REVISED BY | DATE REVISED
LITTON WANG | DAC LE
CALCULATED-DESIGNED BY | CHECKED BY
FUNCTIONAL SUPERVISOR: KEN KEATON
STATE OF CALIFORNIA - DEPARTMENT OF TRANSPORTATION
Caltrans
NORTH REGION DIVISION OF ENGINEERING

LAST REVISION 00-00-00
DATE PLOTTED => 29-SEP-2014
TIME PLOTTED => 13:25

Dist	COUNTY	ROUTE	POST MILES TOTAL PROJECT	SHEET No.	TOTAL SHEETS
03	Pla, Nev	80	69.3/69.8 0.0/R2.3	19	30

LICENSED LANDSCAPE ARCHITECT

6-23-14
PLANS APPROVAL DATE

LICENSED LANDSCAPE ARCHITECT JAMES G. WILLIAMSON No. 5415 Signature 02-29-16 Renewal Date 06-23-14 Date STATE OF CALIFORNIA

THE STATE OF CALIFORNIA OR ITS OFFICERS OR AGENTS SHALL NOT BE RESPONSIBLE FOR THE ACCURACY OR COMPLETENESS OF SCANNED COPIES OF THIS PLAN SHEET.

NOTE:

FOR ADDITIONAL FIBER ROLL INFORMATION SEE STANDARD PLAN H51

FIBER ROLLS

SEQUENCE	ITEM	MATERIAL		REMARKS
		DESCRIPTION	TYPE	
Fiber Rolls must be installed before Bonded Fiber Matrix.	FIBER ROLLS	FIBER ROLL	TYPE A or B 8" TO 10" Dia	Type 1 or 2 Fiber Roll installation

EROSION CONTROL

SEQUENCE	ITEM	MATERIAL		APPLICATION RATE
		DESCRIPTION	TYPE	
STEP 1	EROSION CONTROL (BONDED FIBER MATRIX)	TACKIFIER	BONDED FIBER MATRIX	500 LB/ACRE
		SEED	MIX	171 LB/ACRE
		FERTILIZER	ORGANIC	500 LB/ACRE
STEP 2	EROSION CONTROL (BONDED FIBER MATRIX)	TACKIFIER	BONDED FIBER MATRIX	3500 LB/ACRE
		FERTILIZER	ORGANIC	500 LB/ACRE

SEED MIX

BOTANICAL NAME (COMMON NAME)	PERCENT GERMINATION (MINIMUM)	POUNDS PURE LIVE SEED PER ACRE (SLOPE MEASUREMENT)
ACHILLEA MILLEFOLIUM [1] (WHITE YARROW)	77	1
BROMUS CARINATUS [1] (CALIFORNIA BROME)	72	65
LUPINUS ARGENTEUS [1] (SILVERLEAF LUPINE)	54	60
STIPA PULCHRA [1] (PURPLE NEEDLEGRASS)	60	45
	TOTAL	171

[1]SEED SOURCE FROM NORTHERN SIERRA NEVADA RANGE ABOVE 2,500 FOOT ELEVATION LEVEL.

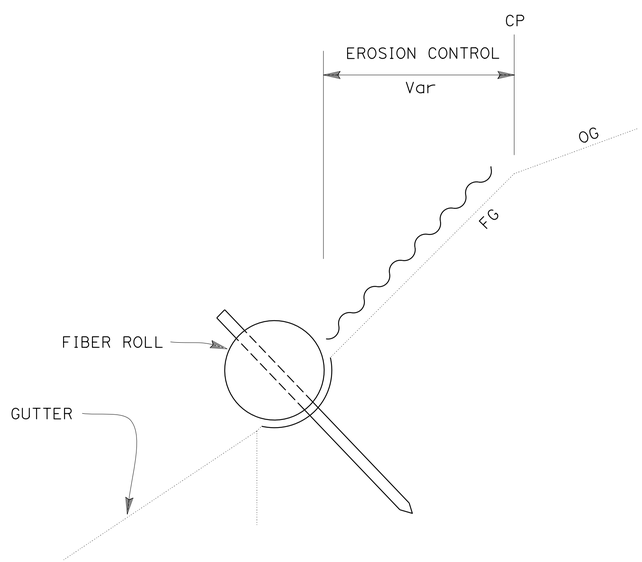

SECTION

FIBER ROLL (Typ)

EROSION CONTROL QUANTITIES

LOCATION			EROSION CONTROL (BONDED FIBER MATRIX)	FIBER ROLL
STATION	L†	R†	SQFT	LF
"L4" 424+70 TO "F1" 454+36		X	7,830	--
"L4" 426+00 TO "F1" 439+00		X	--	1,300
"F4" 442+00 TO "F1" 446+00		X	--	400
"B1" 1+37 TO "B1" 13+50		X	10,950	--
"B1" 16+50 TO "B1" 27+50		X	3,820	--
"B1" 60+00 TO "B1" 79+00		X	9,140	--
"B1" 85+50 TO "B1" 90+50		X	3,330	--
"B1" 95+50 TO "B1" 105+50		X	5,500	--
TOTAL			40,570	1,700

1 REPLACED PER ADDENDUM No. 1 DATED OCTOBER 1, 2014

APPROVED FOR EROSION CONTROL WORK ONLY

EROSION CONTROL DETAILS AND QUANTITIES

NO SCALE

ECD-1

STATE OF CALIFORNIA - DEPARTMENT OF TRANSPORTATION
Caltrans LANDSCAPE ARCHITECTURE

SENIOR LANDSCAPE ARCHITECT: T. CHRIS JOHNSON
CALCULATED-DESIGNED BY: DAN BREWER
CHECKED BY: JAMES WILLIAMSON
REVISED BY
DATE REVISED

LAST REVISION 06-11-14
DATE PLOTTED => 29-SEP-2014
TIME PLOTTED => 13:25