Dist	COUNTY	ROUTE	POST MILES TOTAL PROJECT	SHEET No.	TOTAL SHEETS
04	SM	82,84	1.4/25.1, 23.1/24.1	101	196

Lily Ting 2-16-16
REGISTERED CIVIL ENGINEER DATE

2-16-16
PLANS APPROVAL DATE

REGISTERED PROFESSIONAL ENGINEER Lily Y. Ting No. 37330 Exp. 6-30-16 CIVIL STATE OF CALIFORNIA

THE STATE OF CALIFORNIA OR ITS OFFICERS OR AGENTS SHALL NOT BE RESPONSIBLE FOR THE ACCURACY OR COMPLETENESS OF SCANNED COPIES OF THIS PLAN SHEET.

NOTE:

FOR ACCURATE RIGHT OF WAY DATA, CONTACT RIGHT OF WAY ENGINEERING AT THE DISTRICT OFFICE.

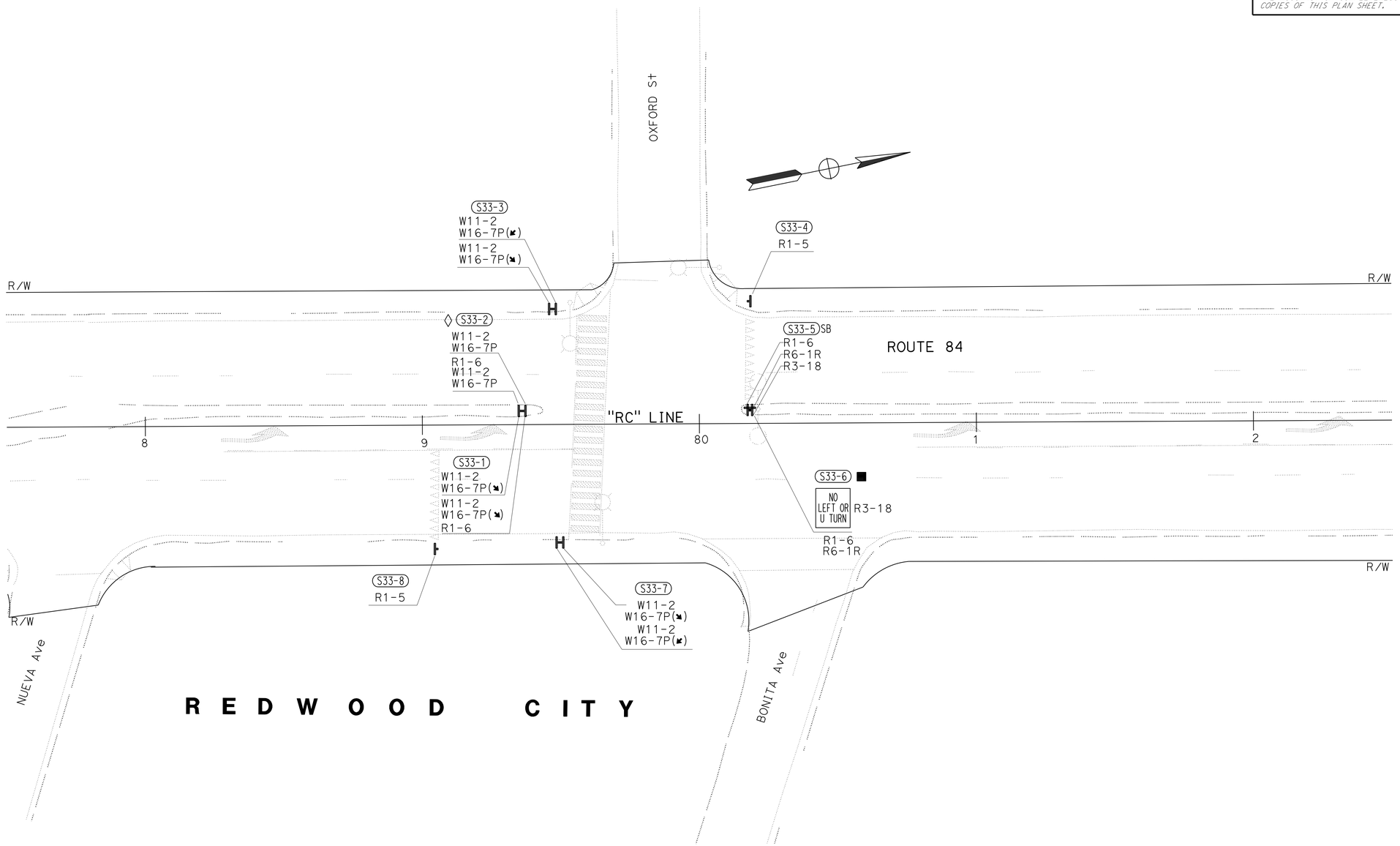

SIGN PLAN
LOCATION No. 33
NO SCALE

APPROVED FOR SIGN WORK ONLY

FOR NOTES AND LEGEND, SEE SHEET S-1

S-33

STATE OF CALIFORNIA - DEPARTMENT OF TRANSPORTATION
Caltrans®
TRAFFIC

FUNCTIONAL SUPERVISOR: RAJESH OBEROI

	REVISED BY	DATE REVISED
	RO	1-27-16

LILY TING — RAJESH OBEROI

CALCULATED-DESIGNED BY / CHECKED BY

LAST REVISION 02-02-16 | DATE PLOTTED => 07-MAR-2016 | TIME PLOTTED => 13:00

Dist	COUNTY	ROUTE	POST MILES TOTAL PROJECT	SHEET No.	TOTAL SHEETS
04	SM	82,84	1.4/25.1, 23.1/24.1	102	196

Lily Ting 2-16-16
REGISTERED CIVIL ENGINEER DATE

2-16-16
PLANS APPROVAL DATE

REGISTERED PROFESSIONAL ENGINEER Lily Y. Ting No. 37330 Exp. 6-30-16 CIVIL STATE OF CALIFORNIA

THE STATE OF CALIFORNIA OR ITS OFFICERS OR AGENTS SHALL NOT BE RESPONSIBLE FOR THE ACCURACY OR COMPLETENESS OF SCANNED COPIES OF THIS PLAN SHEET.

ROADSIDE SIGN QUANTITIES

SHEET No.	SIGN No. (SIGN-No.)	MUTCD CODE	SIGN PANEL SIZE (L x D) INCHES	POST SIZE AND LENGTH 4" x 4"	4" x 6"	6" x 6"	ROADSIDE SIGN ONE POST (EA)	INSTALL ROADSIDE SIGN PANEL ON EXISTING POST (EA)	INSTALL SIGN (STRAP AND SADDLE BRACKET METHOD) (EA)	REMOVE ROADSIDE SIGN (WOOD POST) (EA)	REMOVE ROADSIDE SIGN (METAL POST) (EA)	REMOVE ROADSIDE SIGN PANEL (EA)	REMARKS
S-1	S1-1	W11-2	30 x 30			16'-6"	1						BACK TO BACK
		W16-7P(↘)	24 x 12										
		W11-2	30 x 30										
		W16-7P(↙)	24 x 12										
	S1-2	W11-2	30 x 30			16'-6"	1						BACK TO BACK
		W16-7P(↘)	24 x 12										
		W11-2	30 x 30										
		W16-7P(↙)	24 x 12										
	S1-3	W11-2								1			
		W16-7P											
	S1-4	R1-5L	30 x 30		14'		1						
	S1-5	W11-2	30 x 30			16'-6"	1						BACK TO BACK
		W16-7P(↘)	24 x 12										
		W11-2	30 x 30										
		W16-7P(↙)	24 x 12										
	S1-6	W11-2	30 x 30			16'-6"	1						BACK TO BACK
		W16-7P(↘)	24 x 12										
		W11-2	30 x 30										
		W16-7P(↙)	24 x 12										
	S1-7	W11-2								1			
		W16-7P											
	S1-8	R1-5L	30 x 30		14'		1						
	S1-9	SR56(CA)								1			
	S1-10	SR56(CA)	36 x 54						1				
S-2	S2-1	W11-2	30 x 30			16'-6"	1						
		W16-7P(↘)	24 x 12										
		W11-2	30 x 30										BACK TO BACK
		W16-7P(↙)	24 x 12										
	S2-2	R1-5L	30 x 30		14'		1						
	S2-3	W11-2	24 x 24		15'-6"		1						
		W16-7P(↘)	24 x 12										
		W11-2	24 x 24										BACK TO BACK
		W16-7P(↘)	24 x 12										
	S2-4	W11-2	30 x 30			16'-6"	1						
		W16-7P(↘)	24 x 12										
		W11-2	30 x 30										BACK TO BACK
		W16-7P(↙)	24 x 12										
	S2-5	R1-5L	30 x 30		14'		1						
S-3	S3-1	W11-2										1	
	S3-2	W11-2	30 x 30			16'-6"	1						
		W16-7P(↘)	24 x 12										
		W11-2	30 x 30										BACK TO BACK
		W16-7P(↙)	24 x 12										
	S3-3	R1-5L	30 x 30		14'		1						
	S3-4	W11-2	24 x 24		15'-6"		1						
		W16-7P(↘)	24 x 12										
		W11-2	24 x 24										BACK TO BACK
		W16-7P(↙)	24 x 12										
	S3-5	W11-2	30 x 30			16'-6"	1						
		W16-7P(↘)	24 x 12										
		W11-2	30 x 30										BACK TO BACK
		W16-7P(↙)	24 x 12										
	S3-6	W11-2										1	
	S3-7	R1-5L	30 x 30		14'		1						
	S3-8	R6-1R										1	
	S3-9	R6-1R	36 x 12					1					
	S3-10	R6-1R										1	
	S3-11	R6-1R	36 x 12					1					
SHEET TOTAL							16	2	1	3		4	

LEGEND:

(E) ELECTRICAL ITEM
(N) - NOT A SEPARATE PAY ITEM, FOR INFORMATION ONLY.

SIGN QUANTITIES

SQ-1

STATE OF CALIFORNIA - DEPARTMENT OF TRANSPORTATION
Caltrans
TRAFFIC

FUNCTIONAL SUPERVISOR: RAJESH OBEROI
CALCULATED-DESIGNED BY: LILY TING
CHECKED BY: RAJESH OBEROI
REVISED BY: RO
DATE REVISED: 1-27-16

LAST REVISION 02-05-16
DATE PLOTTED => 07-MAR-2016
TIME PLOTTED => 13:00

Dist	COUNTY	ROUTE	POST MILES TOTAL PROJECT	SHEET No.	TOTAL SHEETS
04	SM	82,84	1.4/25.1, 23.1/24.1	103	196

Lily Ting 2-16-16
REGISTERED CIVIL ENGINEER DATE

2-16-16
PLANS APPROVAL DATE

REGISTERED PROFESSIONAL ENGINEER Lily Y. Ting No. 37330 Exp. 6-30-16 CIVIL STATE OF CALIFORNIA

THE STATE OF CALIFORNIA OR ITS OFFICERS OR AGENTS SHALL NOT BE RESPONSIBLE FOR THE ACCURACY OR COMPLETENESS OF SCANNED COPIES OF THIS PLAN SHEET.

ROADSIDE SIGN QUANTITIES

SHEET No.	SIGN No. (SIGN-No.)	MUTCD CODE	SIGN PANEL SIZE (L x D) INCHES	POST SIZE AND LENGTH 4" x 4"	4" x 6"	6" x 6"	ROADSIDE SIGN ONE POST EA	INSTALL ROADSIDE SIGN PANEL ON EXISTING POST EA	INSTALL SIGN (STRAP AND SADDLE BRACKET METHOD) EA	REMOVE ROADSIDE SIGN (WOOD POST) EA	REMOVE ROADSIDE SIGN (METAL POST) EA	REMOVE ROADSIDE SIGN PANEL EA	REMARKS
S-4	S4-1	W11-2	30 x 30			16′-6"	1						BACK TO BACK
		W16-7P(⬊)	24 x 12										
		W11-2	30 x 30										
		W16-7P(⬋)	24 x 12										
	S4-2	W11-2										1	
	S4-3	R1-5L	30 x 30		14′		1						
	S4-4	W11-2	24 x 24		15′-6"		1						BACK TO BACK
		W16-7P(⬊)	24 x 12										
		W11-2	24 x 24										
		W16-7P(⬊)	24 x 12										
	S4-5	W11-2	30 x 30			16′-6"	1						BACK TO BACK
		W16-7P(⬊)	24 x 12										
		W11-2	30 x 30										
		W16-7P(⬋)	24 x 12										
	S4-6	R1-5L	30 x 30		14′		1						
	S4-7	W11-2										1	
S-5	S5-1	R10-23	24 x 30										ON MAST ARM, (E), (N)
	S5-2	W11-2	30 x 30			16′-6"	1						BACK TO BACK
		W16-7P(⬊)	24 x 12										
		W11-2	30 x 30										
		W16-7P(⬋)	24 x 12										
	S5-3	W11-2										1	
	S5-4	R10-6	24 x 36		14′-6"		1						
	S5-5	R10-23	24 x 30										ON MAST ARM, (E), (N)
	S5-6	W11-2	30 x 30			16′-6"	1						BACK TO BACK
		W16-7P(⬊)	24 x 12										
		W11-2	30 x 30										
		W16-7P(⬋)	24 x 12										
	S5-7	W11-2	18 x 18		13′-6"		1						BACK TO BACK
		W16-7P(⬊)	24 x 12										
		W11-2	18 x 18										
		W16-7P(⬊)	24 x 12										
	S5-8	R10-6	24 x 36		14′-6"		1						
	S5-9	W11-2										1	
	S5-10	R10-3	9 x 12										ON PED PUSH BUTTON, (E), (N)
	S5-11	R10-3	9 x 12										ON PED PUSH BUTTON, (E), (N)
S-6	S6-1	R10-23	24 x 30										ON MAST ARM, (E), (N)
	S6-2	W11-2	30 x 30			16′-6"	1						BACK TO BACK
		W16-7P(⬊)	24 x 12										
		W11-2	30 x 30										
		W16-7P(⬋)	24 x 12										
	S6-3	W11-2	24 x 24		15′-6"		1						BACK TO BACK
		W16-7P(⬊)	24 x 12										
		W11-2	24 x 24										
		W16-7P(⬊)	24 x 12										
	S6-4	R10-6	24 x 36		14′-6"		1						
	S6-5	R49 (CA)	42 x 18										ON PED BARRICADE, (E), (N)
	S6-6	R3-18	24 x 24		13′-6"		1						
	S6-7	R3-18	24 x 24		13′-6"		1						
	S6-8	R10-23	24 x 30										ON MAST ARM, (E), (N)
	S6-9	W11-2	30 x 30			16′-6"	1						BACK TO BACK
		W16-7P(⬊)	24 x 12										
		W11-2	30 x 30										
		W16-7P(⬋)	24 x 12										
	S6-10	R10-6	24 x 36		14′-6"		1						
SHEET TOTAL							17					4	

SIGN QUANTITIES

SQ-2

STATE OF CALIFORNIA - DEPARTMENT OF TRANSPORTATION
Caltrans TRAFFIC

FUNCTIONAL SUPERVISOR: RAJESH OBEROI
CALCULATED-DESIGNED BY: LILY TING
CHECKED BY: RAJESH OBEROI
REVISED BY: RO
DATE REVISED: 1-27-16

LAST REVISION 02-05-16 | DATE PLOTTED => 07-MAR-2016 | TIME PLOTTED => 13:00

Dist	COUNTY	ROUTE	POST MILES TOTAL PROJECT	SHEET No.	TOTAL SHEETS
04	SM	82,84	1.4/25.1, 23.1/24.1	104	196

Lily Ting 2-16-16
REGISTERED CIVIL ENGINEER DATE

2-16-16
PLANS APPROVAL DATE

REGISTERED PROFESSIONAL ENGINEER Lily Y. Ting No. 37330 Exp. 6-30-16 CIVIL STATE OF CALIFORNIA

THE STATE OF CALIFORNIA OR ITS OFFICERS OR AGENTS SHALL NOT BE RESPONSIBLE FOR THE ACCURACY OR COMPLETENESS OF SCANNED COPIES OF THIS PLAN SHEET.

ROADSIDE SIGN QUANTITIES

SHEET No.	SIGN No. (SIGN-No.)	MUTCD CODE	SIGN PANEL SIZE (L x D) INCHES	POST SIZE AND LENGTH 4" x 4"	4" x 6"	6" x 6"	ROADSIDE SIGN ONE POST (EA)	INSTALL ROADSIDE SIGN PANEL ON EXISTING POST (EA)	INSTALL SIGN (STRAP AND SADDLE BRACKET METHOD) (EA)	REMOVE ROADSIDE SIGN (WOOD POST) (EA)	REMOVE ROADSIDE SIGN (METAL POST) (EA)	REMOVE ROADSIDE SIGN PANEL (EA)	REMARKS
S-7	S7-1	W11-2	24 x 24		15′-6"		1						BACK TO BACK
		W16-7P(⇲)	24 x 12										
		W11-2	24 x 24										
		W16-7P(⇱)	24 x 12										
	S7-2	W11-2	30 x 30			16′-6"	1						BACK TO BACK
		W16-7P(⇲)	24 x 12										
		W11-2	30 x 30										
		W16-7P(⇱)	24 x 12										
	S7-3	R1-5L	30 x 30		14′		1						
	S7-4	W3-3	36 x 36		14′-6"		1						
	S7-5	W11-2	30 x 30			16′-6"	1						BACK TO BACK
		W16-7P(⇲)	24 x 12										
		W11-2	30 x 30										
		W16-7P(⇱)	24 x 12										
	S7-6	W3-3								1			
	S7-7	R1-5L	30 x 30										
	S7-8	R6-1R										1	
	S7-9	R6-1R	36 x 12					1					
S-8	S8-1	W11-2	24 x 24		15′-6"		1						BACK TO BACK
		W16-7P(⇲)	24 x 12										
		W11-2	24 x 24										
		W16-7P(⇲)	24 x 12										
	S8-2	W11-2	30 x 30			16′-6"	1						BACK TO BACK
		W16-7P(⇲)	24 x 12										
		W11-2	30 x 30										
		W16-7P(⇱)	24 x 12										
	S8-3	R1-5L	30 x 30		14′		1						
	S8-4	W11-2	30 x 30			16′-6"	1						BACK TO BACK
		W16-7P(⇲)	24 x 12										
		W11-2	30 x 30										
		W16-7P(⇱)	24 x 12										
	S8-5	R1-5L	30 x 30		14′		1						
	S8-6	R49(CA)L	42 x 18					1					
	S8-7	R49(CA)L										1	
S-9	S9-1	W11-2	30 x 30			16′-6"	1						BACK TO BACK
		W16-7P(⇲)	24 x 12										
		W11-2	30 x 30										
		W16-7P(⇱)	24 x 12										
	S9-2	R10-23	24 x 30										ON MAST ARM, (E), (N)
	S9-3	R10-6	24 x 36		14′-6"		1						
	S9-4	W11-2	24 x 24		15′-6"		1						BACK TO BACK
		W16-7P(⇲)	24 x 12										
		W11-2	24 x 24										
		W16-7P(⇲)	24 x 12										
	S9-5	OM1-3										1	
		R6-1R											
	S9-6	W16-7P										1	
		R32(CA)											
	S9-7	W11-2	30 x 30			16′-6"	1						BACK TO BACK
		W16-7P(⇲)	24 x 12										
		W11-2	30 x 30										
		W16-7P(⇱)	24 x 12										
	S9-8	R10-23	24 x 30										ON MAST ARM, (E), (N)
	S9-9	R10-6	24 x 36		14′-6"		1						
	S9-10	R32(CA)	12 x 18	12′			1						
	S9-11	R6-1R	36 x 12					1					
	S9-12	R10-3	9 x 12										ON PED PUSH BUTTON, (E), (N)
	S9-13	R10-3	9 x 12										ON PED PUSH BUTTON, (E), (N)
SHEET TOTAL							16	3		1		4	

SIGN QUANTITIES

SQ-3

REVISED BY	DATE REVISED
RO	1-27-16

LILY TING — RAJESH OBEROI
CALCULATED-DESIGNED BY — CHECKED BY
FUNCTIONAL SUPERVISOR — RAJESH OBEROI

STATE OF CALIFORNIA - DEPARTMENT OF TRANSPORTATION
Caltrans
TRAFFIC

LAST REVISION 02-05-16 | DATE PLOTTED => 07-MAR-2016 | TIME PLOTTED => 13:00

ROADSIDE SIGN QUANTITIES

SHEET No.	SIGN No. (SIGN-No.)	MUTCD CODE	SIGN PANEL SIZE (L x D) INCHES	POST SIZE AND LENGTH 4" x 4"	POST SIZE AND LENGTH 4" x 6"	POST SIZE AND LENGTH 6" x 6"	ROADSIDE SIGN ONE POST (EA)	INSTALL ROADSIDE SIGN PANEL ON EXISTING POST (EA)	INSTALL SIGN (STRAP AND SADDLE BRACKET METHOD) (EA)	REMOVE ROADSIDE SIGN (WOOD POST) (EA)	REMOVE ROADSIDE SIGN (METAL POST) (EA)	REMOVE ROADSIDE SIGN PANEL (EA)	REMARKS
S-10	S10-1	W11-2	24 x 24		15'-6"		1						BACK TO BACK
		W16-7P(↘)	24 x 12										
		W11-2	24 x 24										
		W16-7P(↘)	24 x 12										
	S10-2	W11-2	30 x 30			16'-6"	1						BACK TO BACK
		W16-7P(↘)	24 x 12										
		W11-2	30 x 30										
		W16-7P(↙)	24 x 12										
	S10-3	R10-23	24 x 30										ON MAST ARM, (E), (N)
	S10-4	R10-6	24 x 36						1				
	S10-5	R10-23	24 x 30										ON MAST ARM, (E), (N)
	S10-6	W11-2	30 x 30			16'-6"	1						BACK TO BACK
		W16-7P(↘)	24 x 12										
		W11-2	30 x 30										
		W16-7P(↙)	24 x 12										
	S10-7	W11-2											
		W16-7P										1	
	S10-8	R10-6	24 x 36		14'-6"		1						
	S10-9	R10-3	9 x 12										ON PED PUSH BUTTON, (E), (N)
	S10-10	R10-3	9 x 12										ON PED PUSH BUTTON, (E), (N)
S-11	S11-1	R10-23	24 x 30										ON MAST ARM, (E), (N)
	S11-2	W11-2								1			
	S11-3	W11-2	30 x 30			16'-6"	1						BACK TO BACK
		W16-7P(↘)	24 x 12										
		W11-2	30 x 30										
		W16-7P(↙)	24 x 12										
	S11-4	R10-6	24 x 36		14'-6"		1						
	S11-5	W11-2	24 x 24		15'-6"		1						
		W16-7P(↘)	24 x 12										
		W11-2	24 x 24										BACK TO BACK
		W16-7P(↘)	24 x 12										
	S11-6	R10-23	24 x 30										ON MAST ARM, (E), (N)
	S11-7	W11-2	30 x 30			16'-6"	1						BACK TO BACK
		W16-7P(↘)	24 x 12										
		W11-2	30 x 30										
		W16-7P(↙)	24 x 12										
	S11-8	W11-2								1			
	S11-9	R10-6	24 x 36		14'-6"		1						
	S11-10	R6-1L								1			
	S11-11	R6-1L	36 x 12		12'-6"		1						
	S11-12	R10-3	9 x 12										ON PED PUSH BUTTON, (E), (N)
	S11-13	R10-3	9 x 12										ON PED PUSH BUTTON, (E), (N)
S-12	S12-1	W11-2	30 x 30			16'-6"	1						BACK TO BACK
		W16-7P(↘)	24 x 12										
		W11-2	30 x 30										
		W16-7P(↙)	24 x 12										
	S12-2	W11-2								1			
	S12-3	R10-6	24 x 36		14'-6"		1						
	S12-4	R10-23	24 x 30										ON MAST ARM, (E), (N)
	S12-5	R10-23	24 x 30										ON MAST ARM, (E), (N)
	S12-6	W11-2	24 x 24		15'-6"		1						BACK TO BACK
		W16-7P(↘)	24 x 12										
		W11-2	24 x 24										
		W16-7P(↘)	24 x 12										
	S12-7	W11-2	30 x 30			16'-6"	1						BACK TO BACK
		W16-7P(↘)	24 x 12										
		W11-2	30 x 30										
		W16-7P(↙)	24 x 12										
	S12-8	R10-6	24 x 36		14'-6"		1						
	S12-9	R10-3	9 x 12										ON PED PUSH BUTTON, (E), (N)
	S12-10	R10-3	9 x 12										ON PED PUSH BUTTON, (E), (N)
SHEET TOTAL							15		1	4		1	

Dist	COUNTY	ROUTE	POST MILES TOTAL PROJECT	SHEET No.	TOTAL SHEETS
04	SM	82,84	1.4/25.1, 23.1/24.1	105	196

Lily Ting 2-16-16
REGISTERED CIVIL ENGINEER DATE

2-16-16
PLANS APPROVAL DATE

REGISTERED PROFESSIONAL ENGINEER Lily Y. Ting No. 37330 Exp. 6-30-16 CIVIL STATE OF CALIFORNIA

THE STATE OF CALIFORNIA OR ITS OFFICERS OR AGENTS SHALL NOT BE RESPONSIBLE FOR THE ACCURACY OR COMPLETENESS OF SCANNED COPIES OF THIS PLAN SHEET.

RO 1-27-16
REVISED BY DATE REVISED
LILY TING RAJESH OBEROI
CALCULATED-DESIGNED BY CHECKED BY
FUNCTIONAL SUPERVISOR RAJESH OBEROI
STATE OF CALIFORNIA - DEPARTMENT OF TRANSPORTATION
Caltrans TRAFFIC

SIGN QUANTITIES

SQ-4

LAST REVISION 02-05-16 | DATE PLOTTED => 07-MAR-2016 | TIME PLOTTED => 13:00

Dist	COUNTY	ROUTE	POST MILES TOTAL PROJECT	SHEET No.	TOTAL SHEETS
04	SM	82,84	1.4/25.1, 23.1/24.1	106	196

Lily Ting 2-16-16
REGISTERED CIVIL ENGINEER DATE

2-16-16
PLANS APPROVAL DATE

REGISTERED PROFESSIONAL ENGINEER Lily Y. Ting No. 37330 Exp. 6-30-16 CIVIL STATE OF CALIFORNIA

THE STATE OF CALIFORNIA OR ITS OFFICERS OR AGENTS SHALL NOT BE RESPONSIBLE FOR THE ACCURACY OR COMPLETENESS OF SCANNED COPIES OF THIS PLAN SHEET.

ROADSIDE SIGN QUANTITIES

SHEET No.	SIGN No. (SIGN-No.)	MUTCD CODE	SIGN PANEL SIZE (L x D)	POST SIZE AND LENGTH			ROADSIDE SIGN	INSTALL ROADSIDE SIGN SIGN PANEL ON EXISTING POST	INSTALL SIGN (STRAP AND SADDLE BRACKET METHOD)	REMOVE ROADSIDE SIGN (WOOD POST)	REMOVE ROADSIDE SIGN (METAL POST)	REMOVE ROADSIDE SIGN PANEL	REMARKS
							ONE POST						
			INCHES	4" x 4"	4" x 6"	6" x 6"	EA						
S-13	S13-1	W11-2								1			
	S13-2	W11-2	30 x 30			16'-6"	1						BACK TO BACK
		W16-7P(↘)	24 x 12										
		W11-2	30 x 30										
		W16-7P(↙)	24 x 12										
	S13-3	R10-23	24 x 30										ON MAST ARM, (E), (N)
	S13-4	R10-6	24 x 36		14'-6"		1						
	S13-5	R3-2										1	
	S13-6	R3-2	24 x 24					1					
	S13-7	Spec 1									1		RIGHT TURN ONLY
	S13-8	R3-2	24 x 24		12'-6"		1						
	S13-9	W11-2										1	
	S13-10	R10-23	24 x 30										ON MAST ARM, (E), (N)
	S13-11	W11-2	24 x 24			15'-6"	1						BACK TO BACK
		W16-7P(↘)	24 x 12										
		W11-2	24 x 24										
		W16-7P(↘)	24 x 12										
	S13-12	W11-2	30 x 30			16'-6"	1						BACK TO BACK
		W16-7P(↘)	24 x 12										
		W11-2	30 x 30										
		W16-7P(↙)	24 x 12										
	S13-13	R10-6	24 x 36		14'-6"		1						
	S13-14	R3-18										1	
		R3-2											
	S13-15	R3-18	24 x 24					1					
		R3-2	24 x 24										
	S13-16	R10-3	9 x 12										ON PED PUSH BUTTON, (E), (N)
	S13-17	R10-3	9 x 12										ON PED PUSH BUTTON, (E), (N)
S-14	S14-1	W11-2	24 x 24		15'-6"		1						BACK TO BACK
		W16-7P(↘)	24 x 12										
		W11-2	24 x 24										
		W16-7P(↘)	24 x 12										
	S14-2	R3-18	24 x 24		13'-6"		1						
		R6-1R	36 x 12										
	S14-3	W11-2									1		
		Spec 2											
		R3-18											
		R6-1R											
		W11-2											
		SPEC 2											
	S14-4	W11-2									1		
		W16-7p											
	S14-5	W11-2	30 x 30			16'-6"	1						BACK TO BACK
		W16-7P(↘)	24 x 12										
		W11-2	30 x 30										
		W16-7P(↙)	24 x 12										
	S14-6	R10-6	24 x 36		14'-6"		1						
	S14-7	R10-23	24 x 30										ON MAST ARM, (E), (N)
	S14-8	R10-23	24 x 30										ON MAST ARM, (E), (N)
	S14-9	W11-2	30 x 30			16'-6"	1						BACK TO BACK
		W16-7P(↘)	24 x 12										
		W11-2	30 x 30										
		W16-7P(↙)	24 x 12										
	S14-10	W11-2									1		
		W16-7p											
	S14-11	R10-6	24 x 36		14'-6"		1						
	S14-12	R10-3	9 x 12										ON PED PUSH BUTTON, (E), (N)
	S14-13	R10-3	9 x 12										ON PED PUSH BUTTON, (E), (N)
SHEET TOTAL							12	2		1	4	3	

SIGN QUANTITIES

SQ-5

STATE OF CALIFORNIA - DEPARTMENT OF TRANSPORTATION
Caltrans TRAFFIC

FUNCTIONAL SUPERVISOR: RAJESH OBEROI
CALCULATED-DESIGNED BY: LILY TING
CHECKED BY: RAJESH OBEROI
REVISED BY: RO
DATE REVISED: 1-27-16

LAST REVISION 02-05-16
DATE PLOTTED => 07-MAR-2016
TIME PLOTTED => 13:00

Dist	COUNTY	ROUTE	POST MILES TOTAL PROJECT	SHEET No.	TOTAL SHEETS
04	SM	82,84	1.4/25.1, 23.1/24.1	107	196

Lily Ting 2-16-16
REGISTERED CIVIL ENGINEER DATE

2-16-16
PLANS APPROVAL DATE

REGISTERED PROFESSIONAL ENGINEER Lily Y. Ting No. 37330 Exp. 6-30-16 CIVIL STATE OF CALIFORNIA

THE STATE OF CALIFORNIA OR ITS OFFICERS OR AGENTS SHALL NOT BE RESPONSIBLE FOR THE ACCURACY OR COMPLETENESS OF SCANNED COPIES OF THIS PLAN SHEET.

ROADSIDE SIGN QUANTITIES

SHEET No.	SIGN No. (SIGN-No.)	MUTCD CODE	SIGN PANEL SIZE (L x D)	POST SIZE AND LENGTH			ROADSIDE SIGN	INSTALL ROADSIDE SIGN PANEL ON EXISTING POST	INSTALL SIGN (STRAP AND SADDLE BRACKET METHOD)	REMOVE ROADSIDE SIGN (WOOD POST)	REMOVE ROADSIDE SIGN (METAL POST)	REMOVE ROADSIDE SIGN PANEL	REMARKS
			INCHES	4" x 4"	4" x 6"	6" x 6"	ONE POST	EA					
S-15	S15-1	W11-2	30 x 30			16'-6"	1						BACK TO BACK
		W16-7P(↘)	24 x 12										
		W11-2	30 x 30										
		W16-7P(↙)	24 x 12										
	S15-2	R1-5L	30 x 30		14'		1						
	S15-3	W11-2	30 x 30			16'-6"	1						BACK TO BACK
		W16-7P(↘)	24 x 12										
		W11-2	30 x 30										
		W16-7P(↙)	24 x 12										
	S15-4	R1-5L	30 x 30		14'		1						
S-16	S16-1	W11-2	30 x 30			16'-6"	1						
		W16-7P(↘)	24 x 12										
	S16-2	W11-2	30 x 30			16'-6"	1						
		W16-7P(↙)	24 x 12										
	S16-3	R1-5L	30 x 30		14'		1						
	S16-4	W11-2	30 x 30			16'-6"	1						BACK TO BACK
		W16-7P(↘)	24 x 12										
		W11-2	30 x 30										
		W16-7P(↙)	24 x 12										
	S16-5	R1-5L	30 x 30		14'		1						
S-17	S17-1	W11-2	30 x 30			16'-6"	1						BACK TO BACK
		W16-7P(↘)	24 x 12										
		W11-2	30 x 30										
		W16-7P(↙)	24 x 12										
	S17-2	W11-2								1			
		SPEC 3											
	S17-3	R1-5L	30 x 30		14'		1						
	S17-4	W11-2	30 x 30			16'-6"	1						BACK TO BACK
		W16-7P(↘)	24 x 12										
		W11-2	30 x 30										
		W16-7P(↙)	24 x 12										
	S17-5	W11-2								1			
		SPEC 3											
	S17-6	R1-5L	30 x 30		14'		1						
S-18	S18-1	W11-2										1	
		W16-7p											
	S18-2	W11-2	30 x 30			16'-6"	1						BACK TO BACK
		W16-7P(↘)	24 x 12										
		W11-2	30 x 30										
		W16-7P(↙)	24 x 12										
	S18-3	R10-6	24 x 36		14'-6"		1						
	S18-4	R10-23	24 x 30										ON MAST ARM, (E), (N)
	S18-5	W11-2	30 x 30			16'-6"	1						BACK TO BACK
		W16-7P(↘)	24 x 12										
		W11-2	30 x 30										
		W16-7P(↙)	24 x 12										
	S18-6	R10-23	24 x 30										ON MAST ARM, (E), (N)
	S18-7	R10-6	24 x 36		14'-6"		1						
	S18-8	R10-3	9 x 12										ON PED PUSH BUTTON, (E), (N)
	S18-9	R10-3	9 x 12										ON PED PUSH BUTTON, (E), (N)
SHEET TOTAL							17			2		1	

SIGN QUANTITIES

SQ-6

STATE OF CALIFORNIA - DEPARTMENT OF TRANSPORTATION
Caltrans TRAFFIC

FUNCTIONAL SUPERVISOR: RAJESH OBEROI
CALCULATED-DESIGNED BY: LILY TING
CHECKED BY: RAJESH OBEROI
REVISED BY: RO
DATE REVISED: 1-27-16

LAST REVISION: 10-09-15
DATE PLOTTED => 07-MAR-2016
TIME PLOTTED => 13:00

Dist	COUNTY	ROUTE	POST MILES TOTAL PROJECT	SHEET No.	TOTAL SHEETS
04	SM	82,84	1.4/25.1, 23.1/24.1	108	196

Lily Ting 2-16-16
REGISTERED CIVIL ENGINEER DATE

2-16-16
PLANS APPROVAL DATE

REGISTERED PROFESSIONAL ENGINEER Lily Y. Ting No. 37330 Exp. 6-30-16 CIVIL STATE OF CALIFORNIA

THE STATE OF CALIFORNIA OR ITS OFFICERS OR AGENTS SHALL NOT BE RESPONSIBLE FOR THE ACCURACY OR COMPLETENESS OF SCANNED COPIES OF THIS PLAN SHEET.

ROADSIDE SIGN QUANTITIES

SHEET No.	SIGN No. (SIGN-No.)	MUTCD CODE	SIGN PANEL SIZE (L x D)	POST SIZE AND LENGTH			ROADSIDE SIGN	INSTALL ROADSIDE SIGN PANEL ON EXISTING POST	INSTALL SIGN (STRAP AND SADDLE BRACKET METHOD)	REMOVE ROADSIDE SIGN (WOOD POST)	REMOVE ROADSIDE SIGN (METAL POST)	REMOVE ROADSIDE SIGN PANEL	REMARKS
			INCHES	4" x 4"	4" x 6"	6" x 6"	ONE POST	EA					
S-19	S19-1	W11-2	30 x 30			16'-6"	1						BACK TO BACK
		W16-7P(↘)	24 x 12										
		W11-2	30 x 30										
		W16-7P(↙)	24 x 12										
	S19-2	W11-2								1			
		SPEC 3											
	S19-3	R10-23	24 x 30										ON MAST ARM, (E), (N)
	S19-4	W11-2	30 x 30			16'-6"	1						BACK TO BACK
		W16-7P(↘)	24 x 12										
		W11-2	30 x 30										
		W16-7P(↙)	24 x 12										
	S19-5	R10-23	24 x 30										ON MAST ARM, (E), (N)
	S19-6	R10-6	24 x 36		14'-6"		1						
	S19-7	W11-2								1			
		SPEC 3											
	S19-8	W11-2	30 x 30		16'		1						
		W16-9p	24 x 12										
	S19-9	R10-6	24 x 36		14'-6"		1						
	S19-10	R10-3	9 x 12										ON PED PUSH BUTTON, (E), (N)
	S19-11	R10-3	9 x 12										ON PED PUSH BUTTON, (E), (N)
S-20	S20-1	W11-2	30 x 30			16'-6"	1						BACK TO BACK
		W16-7P(↘)	24 x 12										
		W11-2	30 x 30										
		W16-7P(↙)	24 x 12										
	S20-2	R1-5L	30 x 30		14'-6"		1						
	S20-3	W11-2	24 x 24				1						BACK TO BACK
		W16-7P(↘)	24 x 12										
		W11-2	24 x 24		15'-6"								
		W16-7P(↘)	24 x 12										
	S20-4	W11-2	30 x 30			16'-6"	1						BACK TO BACK
		W16-7P(↘)	24 x 12										
		W11-2	30 x 30										
		W16-7P(↙)	24 x 12										
	S20-5	R3-18								1			
		R6-1R											
		SPEC 4											
	S20-6	R3-18	24 x 24		12'-6"		1						
		R6-1R	36 x 12										
	S20-7	R1-5L	30 x 30		14'		1						
S-21	S21-1	W11-2	24 x 24		15'-6"		1						BACK TO BACK
		W16-7P(↘)	24 x 12										
		W11-2	24 x 24										
		W16-7P(↘)	24 x 12										
	S21-2	W11-2	30 x 30			16'-6"	1						BACK TO BACK
		W16-7P(↘)	24 x 12										
		W11-2	30 x 30										
		W16-7P(↙)	24 x 12										
	S21-3	R1-5L	30 x 30		14'		1						
	S21-4	W11-2	30 x 30			16'-6"	1						BACK TO BACK
		W16-7P(↘)	24 x 12										
		W11-2	30 x 30										
		W16-7P(↙)	24 x 12										
	S21-5	R1-5L	30 x 30		14'			1					
	S21-6	R6-1R										1	
	S21-7	R6-1R	36 x 12					1					
SHEET TOTAL							15	2		3		1	

SIGN QUANTITIES

SQ-7

STATE OF CALIFORNIA - DEPARTMENT OF TRANSPORTATION
Caltrans TRAFFIC

FUNCTIONAL SUPERVISOR: RAJESH OBEROI
CALCULATED-DESIGNED BY: LILY TING
CHECKED BY: RAJESH OBEROI
REVISED BY: RO
DATE REVISED: 1-27-16

LAST REVISION 02-05-16 | DATE PLOTTED => 07-MAR-2016 | TIME PLOTTED => 13:00

Dist	COUNTY	ROUTE	POST MILES TOTAL PROJECT	SHEET No.	TOTAL SHEETS
04	SM	82,84	1.4/25.1, 23.1/24.1	109	196

Lily Ting 2-16-16
REGISTERED CIVIL ENGINEER DATE

2-16-16
PLANS APPROVAL DATE

REGISTERED PROFESSIONAL ENGINEER Lily Y. Ting No. 37330 Exp. 6-30-16 CIVIL STATE OF CALIFORNIA

THE STATE OF CALIFORNIA OR ITS OFFICERS OR AGENTS SHALL NOT BE RESPONSIBLE FOR THE ACCURACY OR COMPLETENESS OF SCANNED COPIES OF THIS PLAN SHEET.

ROADSIDE SIGN QUANTITIES

SHEET No.	SIGN No. (SIGN-No.)	MUTCD CODE	SIGN PANEL SIZE (L x D)	POST SIZE AND LENGTH			ROADSIDE SIGN	INSTALL ROADSIDE SIGN PANEL ON EXISTING POST	INSTALL SIGN (STRAP AND SADDLE BRACKET METHOD)	REMOVE ROADSIDE SIGN (WOOD POST)	REMOVE ROADSIDE SIGN (METAL POST)	REMOVE ROADSIDE SIGN PANEL	REMARKS
			INCHES	4" x 4"	4" x 6"	6" x 6"	ONE POST	EA					
S-22	S22-1	W11-2	30 x 30			16'-6"	1						BACK TO BACK
		W16-7P(↘)	24 x 12										
		W11-2	30 x 30										
		W16-7P(↙)	24 x 12										
	S22-2	R1-5L	30 x 30		14'		1						
	S22-3	W11-2	24 x 24		15'-6"		1						BACK TO BACK
		W16-7P(↘)	24 x 12										
		W11-2	24 x 24										
		W16-7P(↘)	24 x 12										
	S22-4	W11-2	30 x 30			16'-6"	1						BACK TO BACK
		W16-7P(↘)	24 x 12										
		W11-2	30 x 30										
		W16-7P(↙)	24 x 12										
	S22-5	R1-5L	30 x 30		14'		1						
S-23	S23-1	W11-2	24 x 24		15'-6"		1						BACK TO BACK
		W16-7P(↘)	24 x 12										
		W11-2	24 x 24										
		W16-7P(↘)	24 x 12										
	S23-2	W11-2	30 x 30			16'-6"	1						BACK TO BACK
		W16-7P(↘)	24 x 12										
		W11-2	30 x 30										
		W16-7P(↙)	24 x 12										
	S23-3	R1-5L	30 x 30		14'		1						
	S23-4	W11-2										1	
		W16-7p											
	S23-5	W11-2	30 x 30						1				
		W16-9p	24 x 12										
	S23-6	W11-2	30 x 30			16'-6"	1						BACK TO BACK
		W16-7P(↘)	24 x 12										
		W11-2	30 x 30										
		W16-7P(↙)	24 x 12										
	S23-7	R1-5L	30 x 30		14'		1						
	S23-8	W11-2	30 x 30						1				
		W16-9p	24 x 12										
	S23-9	W11-2										1	
		W16-7p											
	S23-10	R48(CA)										1	
	S23-11	R48(CA)	36 x 48						1				
S-24	S24-1	W11-2										1	
		W16-7p											
	S24-2	W11-2	30 x 30			16'-6"	1						BACK TO BACK
		W16-7P(↘)	24 x 12										
		W11-2	30 x 30										
		W16-7P(↙)	24 x 12										
	S24-3	R1-5L	30 x 30		14'		1						
	S24-4	W11-2										1	
		W16-7p											
	S24-5	W11-2	30 x 30			16'-6"	1						BACK TO BACK
		W16-7P(↘)	24 x 12										
		W11-2	30 x 30										
		W16-7P(↙)	24 x 12										
	S24-6	R1-5L	30 x 30		14'		1						
SHEET TOTAL							14		3			5	

STATE OF CALIFORNIA - DEPARTMENT OF TRANSPORTATION
Caltrans® TRAFFIC

FUNCTIONAL SUPERVISOR: RAJESH OBEROI
CALCULATED-DESIGNED BY: LILY TING
CHECKED BY: RAJESH OBEROI
REVISED BY: RO
DATE REVISED: 1-27-16

SIGN QUANTITIES

SQ-8

LAST REVISION 02-05-16 | DATE PLOTTED => 07-MAR-2016 | TIME PLOTTED => 13:00

ROADSIDE SIGN QUANTITIES

SHEET No.	SIGN No. (SIGN-No.)	MUTCD CODE	SIGN PANEL SIZE (L x D)	POST SIZE AND LENGTH			ROADSIDE SIGN ONE POST	INSTALL ROADSIDE SIGN PANEL ON EXISTING POST	INSTALL SIGN (STRAP AND SADDLE BRACKET METHOD)	REMOVE ROADSIDE SIGN (WOOD POST)	REMOVE ROADSIDE SIGN (METAL POST)	REMOVE ROADSIDE SIGN PANEL	REMARKS
			INCHES	4" x 4"	4" x 6"	6" x 6"	EA						
S-25	S25-1	R10-23	24 x 30										ON MAST ARM, (E), (N)
	S25-2	W11-2	30 x 30			16'-6"	1						BACK TO BACK
		W16-7P(⬊)	24 x 12										
		W11-2	30 x 30										
		W16-7P(⬋)	24 x 12										
	S25-3	R1-5L								1			
	S25-4	R10-6	24 x 36		14'-6"		1						
	S25-5	R1-5L								1			
	S25-6	R3-18	24 x 24		13'-6"		1						
	S25-7	R3-18											
		R1-6											
		R1-6											
	S25-8	W11-2	30 x 30			16'-6"	1						BACK TO BACK
		W16-7P(⬊)	24 x 12										
		W11-2	30 x 30										
		W16-7P(⬋)	24 x 12										
	S25-9	R10-23	24 x 30										ON MAST ARM, (E), (N)
	S25-10	R1-5L								1			
	S25-11	R10-6	24 x 36		14'-6"		1						
	S25-12	W11-2	18 x 18		13'-6"		1						BACK TO BACK
		W16-7P(⬊)	24 x 12										
		W11-2	18 x 18										
		W16-7P(⬊)	24 x 12										
	S25-13	R10-3	9 x 12										ON PED PUSH BUTTON, (E), (N)
	S25-14	R10-3	9 x 12										ON PED PUSH BUTTON, (E), (N)
S-26	S26-1	W11-2	24 x 24		15'-6"		1						BACK TO BACK
		W16-7P(⬊)	24 x 12										
		W11-2	24 x 24										
		W16-7P(⬊)	24 x 12										
	S26-2	W11-2	30 x 30			16'-6"	1						BACK TO BACK
		W16-7P(⬊)	24 x 12										
		W11-2	30 x 30										
		W16-7P(⬋)	24 x 12										
	S26-3	R1-6	24 x 36		14'-0"		1						
		R6-1R	36 x 12										
		R1-5L	30 x 30										
	S26-4	W11-2	30 x 30			16'-6"	1						BACK TO BACK
		W16-7P(⬊)	24 x 12										
		W11-2	30 x 30										
		W16-7P(⬋)	24 x 12										
	S26-5	R1-6								1			
		R6-1R											
		R1-5L											
	S26-6	W11-2										1	
	S26-7	W11-2	30 x 30					1					
		W16-9p	24 x 12										
	S26-8	W11-2										1	
	S26-9	W11-2	30 x 30					1					
		W16-9p	24 x 12										
	S26-10	R1-5L										1	
	S26-11	R1-5L	30 x 30					1					
	S26-12	R1-6	24 x 36		7'-6"		1						
		R6-1R	36 x 12										
		R1-5L	30 x 30										
	S26-13	R1-6								1			
		R6-1R											
		R1-5L											
	S26-14	W11-2	30 x 30					1					
		W16-9p	24 x 12										
	S26-15	W11-2										1	
	S26-16	W11-1								1			
		W11-2											
	S26-17	W11-1	30 x 30			15'	1						
SHEET TOTAL							12	4		6		4	

Dist	COUNTY	ROUTE	POST MILES TOTAL PROJECT	SHEET No.	TOTAL SHEETS
04	SM	82,84	1.4/25.1, 23.1/24.1	110	196

Lily Ting 2-16-16
REGISTERED CIVIL ENGINEER DATE

2-16-16
PLANS APPROVAL DATE

REGISTERED PROFESSIONAL ENGINEER Lily Y. Ting No. 37330 Exp. 6-30-16 CIVIL STATE OF CALIFORNIA

THE STATE OF CALIFORNIA OR ITS OFFICERS OR AGENTS SHALL NOT BE RESPONSIBLE FOR THE ACCURACY OR COMPLETENESS OF SCANNED COPIES OF THIS PLAN SHEET.

RO 1-27-16
REVISED BY DATE REVISED
LILY TING RAJESH OBEROI
CALCULATED-DESIGNED BY CHECKED BY
FUNCTIONAL SUPERVISOR RAJESH OBEROI

STATE OF CALIFORNIA - DEPARTMENT OF TRANSPORTATION
Caltrans TRAFFIC

SIGN QUANTITIES

SQ-9

LAST REVISION 02-05-16
DATE PLOTTED => 07-MAR-2016
TIME PLOTTED => 13:00

Dist	COUNTY	ROUTE	POST MILES TOTAL PROJECT	SHEET No.	TOTAL SHEETS
04	SM	82,84	1.4/25.1, 23.1/24.1	111	196

Lily Ting 2-16-16
REGISTERED CIVIL ENGINEER DATE

2-16-16
PLANS APPROVAL DATE

REGISTERED PROFESSIONAL ENGINEER Lily Y. Ting No. 37330 Exp. 6-30-16 CIVIL STATE OF CALIFORNIA

THE STATE OF CALIFORNIA OR ITS OFFICERS OR AGENTS SHALL NOT BE RESPONSIBLE FOR THE ACCURACY OR COMPLETENESS OF SCANNED COPIES OF THIS PLAN SHEET.

ROADSIDE SIGN QUANTITIES

SHEET No.	SIGN No. (SIGN-No.)	MUTCD CODE	SIGN PANEL SIZE (L x D)	POST SIZE AND LENGTH			ROADSIDE SIGN	INSTALL ROADSIDE SIGN PANEL ON EXISTING POST	INSTALL SIGN (STRAP AND SADDLE BRACKET METHOD)	REMOVE ROADSIDE SIGN (WOOD POST)	REMOVE ROADSIDE SIGN (METAL POST)	REMOVE ROADSIDE SIGN PANEL	REMARKS
			INCHES	4" x 4"	4" x 6"	6" x 6"	ONE POST	EA					
S-26	S26-18	W11-2	30 x 30		16′		1						
		W16-9p	24 x 12										
	S26-19	R1-5L								1			
	S26-20	R1-5L	30 x 30		14′		1						
S-27	S27-1	W11-2	30 x 30			16′-6"	1						
		W16-7P(⬊)	24 x 12										
		W11-2	30 x 30										BACK TO BACK
		W16-7P(⬋)	24 x 12										
	S27-2	W11-2	24 x 24		15′-6"		1						
		W16-7P(⬊)	24 x 12										
	S27-3	R1-5L	30 x 30		14′		1						
	S27-4	W11-1	30 x 30		15′		1						
	S27-5	W11-2										1	
		W11-1											
	S27-6	W11-2	30 x 30					1					
		W16-9p	24 x 12										
	S27-7	R6-1R	36 x 12		13′-6"		1						
		R1-6	24 x 36										
		R3-18	24 x 24										
	S27-8	W11-2	24 x 24		15′-6"		1						
		W16-7P(⬊)	24 x 12										
	S27-9	R6-1											
		R1-5L								1			
		R1-6											
		R3-18											
	S27-10	W11-2	30 x 30			16′-6"	1						BACK TO BACK
		W16-7P(⬊)	24 x 12										
		W11-2	30 x 30										
		W16-7P(⬋)	24 x 12										
	S27-11	W11-1	30 x 30		15′		1						
	S27-12	W11-2	30 x 30					1					
		W16-9p	24 x 12										
	S27-13	W11-2										1	
		W11-1											
	S27-14	R6-1R	36 x 12		14′		1					1	
		R1-5L	30 x 30										
		R1-6	24 x 36										
		R3-18	24 x 24										
	S27-15	R6-1R											
		R1-5L								1			
		R1-6											
		R3-18											
	S27-16	R1-5L								1			
	S27-17	R1-5L	30 x 30		14′		1						
	S27-18	R1-5L								1			
	S27-19	R1-5L	30 x 30		14′		1						
S-28	S28-1	W11-2	30 x 30					1					
		W16-9p	24 x 12										
	S28-2	W11-2										1	
		W11-1											
	S28-3	W11-1	30 x 30		15′		1						
	S28-4	R3-2	24 x 24					1					
	S28-5	R3-2										1	
	S28-6	R3-2	24 x 24		14′		1						
		R6-1R	36 x 12										
	S28-7	R3-2										1	
		R6-1R											
	S28-8	W11-1	30 x 30		15′		1						
	S28-9	W11-2	30 x 30					1					
		W16-9p	24 x 12										
	S28-10	W11-2										1	
		W11-1											
SHEET TOTAL							16	5		5		7	

SIGN QUANTITIES

SQ-10

STATE OF CALIFORNIA - DEPARTMENT OF TRANSPORTATION
Caltrans® TRAFFIC

RO	1-27-16	REVISED BY	DATE REVISED
LILY TING	RAJESH OBEROI	CALCULATED-DESIGNED BY	CHECKED BY
RAJESH OBEROI		FUNCTIONAL SUPERVISOR	

LAST REVISION 02-05-16 | DATE PLOTTED => 07-MAR-2016 | TIME PLOTTED => 13:00

ROADSIDE SIGN QUANTITIES

SHEET No.	SIGN No. (SIGN-No.)	MUTCD CODE	SIGN PANEL SIZE (L x D)	POST SIZE AND LENGTH			ROADSIDE SIGN ONE POST	INSTALL ROADSIDE SIGN PANEL ON EXISTING POST	INSTALL SIGN (STRAP AND SADDLE BRACKET METHOD)	REMOVE ROADSIDE SIGN (WOOD POST)	REMOVE ROADSIDE SIGN (METAL POST)	REMOVE ROADSIDE SIGN PANEL	REMARKS
			INCHES	4" x 4"	4" x 6"	6" x 6"	EA						
S-28	S28-11	W11-2	30 x 30					1					
		W16-9p	24 x 12										
	S28-12	W11-2										1	
	S28-13	W11-1	30 x 30		15′		1						
	S28-14	W11-2										1	
		W11-1											
	S28-15	W11-2	30 x 30					1					
		W16-9p	24 x 12										
	S28-16	R6-1L										1	
	S28-17	R6-1L	36 x 12					1					
	S28-18	OM1-3								1			
	S28-19	OM1-3	18 x 18		10′-6"		1						
S-29	S29-1	R10-23	24 x 30										ON MAST ARM, (E), (N)
	S29-2	W11-2	30 x 30			16′-6"	1						
		W16-7P(↘)	24 x 12										
		W11-2	30 x 30										BACK TO BACK
		W16-7P(↙)	24 x 12										
	S29-3	R1-5L								1			
	S29-4	R10-6	24 x 36		14′-6"		1						
	S29-5	W11-1	30 x 30		15′		1						
	S29-6	W11-2	30 x 30					1					
		W16-9p	24 x 12										
	S29-7	W11-2										1	
		W11-1											
	S29-8	R6-1R											
		R1-6								1			
		R1-6											
	S29-9	R6-1R	36 x 12	11′-6"			1						
	S29-10	R10-23	24 x 30										ON MAST ARM, (E), (N)
	S29-11	W11-2	30 x 30			16′-6"	1						
		W16-7P(↘)	24 x 12										
		W11-2	30 x 30										BACK TO BACK
		W16-7P(↙)	24 x 12										
	S29-12	R6-1R	36 x 12	11′-6"			1						
	S29-13	R6-1R											
		R1-6								1			
		R1-6											
	S29-14	R10-6	24 x 36		14′-6"		1						
	S29-15	R1-5L								1			
	S29-16	W11-1	30 x 30		15′		1						
	S29-17	W11-2	30 x 30					1					
		W16-9p	24 x 12										
	S29-18	W11-2										1	
		W11-1											
	S29-19	R6-1L										1	
	S29-20	R6-1L	36 x 12					1					
	S29-21	R10-3	9 x 12										ON PED PUSH BUTTON, (E), (N)
	S29-22	R10-3	9 x 12										ON PED PUSH BUTTON, (E), (N)
S-30	S30-1	W11-2										1	
	S30-2	W11-2	30 x 30					1					
		W16-9p	24 x 24										
	S30-3	R10-23	24 x 30										ON MAST ARM, (E), (N)
	S30-4	W11-2	30 x 30			16′-6"	1						BACK TO BACK
		W16-7P(↘)	24 x 12										
		W11-2	30 x 30										
		W16-7P(↙)	24 x 12										
	S30-5	R1-5L								1			
	S30-6	R10-6	24 x 36		14′-6"		1						
	S30-7	W11-1	30 x 30		15′-6"		1						
	S30-8	W11-2	30 x 30					1					
		W16-9p	24 x 12										
	S30-9	W11-2										1	
		W11-1											
	S30-10	W3-3										1	
SHEET TOTAL							13	8		6		9	

Dist	COUNTY	ROUTE	POST MILES TOTAL PROJECT	SHEET No.	TOTAL SHEETS
04	SM	82,84	1.4/25.1, 23.1/24.1	112	196

Lily Ting 2-16-16
REGISTERED CIVIL ENGINEER DATE

2-16-16
PLANS APPROVAL DATE

REGISTERED PROFESSIONAL ENGINEER Lily Y. Ting No. 37330 Exp. 6-30-16 CIVIL STATE OF CALIFORNIA

THE STATE OF CALIFORNIA OR ITS OFFICERS OR AGENTS SHALL NOT BE RESPONSIBLE FOR THE ACCURACY OR COMPLETENESS OF SCANNED COPIES OF THIS PLAN SHEET.

STATE OF CALIFORNIA - DEPARTMENT OF TRANSPORTATION
Caltrans
TRAFFIC

FUNCTIONAL SUPERVISOR: RAJESH OBEROI
CALCULATED-DESIGNED BY: LILY TING
CHECKED BY: RAJESH OBEROI
REVISED BY: RO
DATE REVISED: 1-27-16

SIGN QUANTITIES

SQ-11

LAST REVISION 02-05-16 | DATE PLOTTED => 07-MAR-2016 | TIME PLOTTED => 13:00

Dist	COUNTY	ROUTE	POST MILES TOTAL PROJECT	SHEET No.	TOTAL SHEETS
04	SM	82,84	1.4/25.1, 23.1/24.1	113	196

Lily Ting 2-16-16
REGISTERED CIVIL ENGINEER DATE

2-16-16
PLANS APPROVAL DATE

REGISTERED PROFESSIONAL ENGINEER Lily Y. Ting No. 37330 Exp. 6-30-16 CIVIL STATE OF CALIFORNIA

THE STATE OF CALIFORNIA OR ITS OFFICERS OR AGENTS SHALL NOT BE RESPONSIBLE FOR THE ACCURACY OR COMPLETENESS OF SCANNED COPIES OF THIS PLAN SHEET.

ROADSIDE SIGN QUANTITIES

SHEET No.	SIGN No. (SIGN-No.)	MUTCD CODE	SIGN PANEL SIZE (L x D)	POST SIZE AND LENGTH			ROADSIDE SIGN	INSTALL ROADSIDE SIGN PANEL ON EXISTING POST	INSTALL SIGN (STRAP AND SADDLE BRACKET METHOD)	REMOVE ROADSIDE SIGN (WOOD POST)	REMOVE ROADSIDE SIGN (METAL POST)	REMOVE ROADSIDE SIGN PANEL	REMARKS
							ONE POST						
			INCHES	4" x 4"	4" x 6"	6" x 6"	EA						
S-30	S30-11	W3-3	30 x 30					1					
	S30-12	R1-6											
		R1-6								1			
		R6-1R											
	S30-13	R6-1R	36 x 12	11'-6"			1						
	S30-14	W11-2	30 x 30			16'-6"	1						BACK TO BACK
		W16-7P(↘)	24 x 12										
		W11-2	30 x 30										
		W16-7P(↙)	24 x 12										
	S30-15	R10-23	24 x 30										ON MAST ARM, (E), (N)
	S30-16	R10-6	24 x 36		14'-6"		1						
	S30-17	R1-5L								1			
	S30-18	W11-2	30 x 30					1					
		W16-9p	24 x 12										
	S30-19	W11-2										1	
		W11-7p											
	S30-20	R2-1(35)								1			
		R48-1(CA)											
	S30-21	R2-1(35)	36 x 48		17'		1						
		R48-1(CA)	36 x 18										
	S30-22	R10-3	9 x 12										ON PED PUSH BUTTON, (E), (N)
	S30-23	R10-3	9 x 12										ON PED PUSH BUTTON, (E), (N)
S-31	S31-1	W11-2	30 x 30			16'-6"	1						BACK TO BACK
		W16-7P(↘)	24 x 12										
		W11-2	30 x 30										
		W16-7P(↙)	24 x 12										
	S31-2	W11-2	24 x 24		15'-6"		1						BACK TO BACK
		W16-7P(↙)	24 x 12										
		W11-2	24 x 24										
		W16-7P(↙)	24 x 12										
	S31-3	R1-5L	30 x 30		14'		1						
	S31-4	R3-18										1	
		R3-4											
		R6-1R											
		R1-6											
	S31-5	R3-18	24 x 24						1				BACK TO BACK
		R3-4	24 x 24										
		R6-1R	36 x 12										
		R1-6	24 x 36										
	S31-6	R1-5L	30 x 30		14'		1						
	S31-7	W11-2								1			
	S31-8	W11-2	24 x 24		15'-6"		1						BACK TO BACK
		W16-7P(↘)	24 x 12										
		W11-2	24 x 24										
		W16-7P(↘)	24 x 12										
	S31-9	W11-2	30 x 30			16'-6"	1						BACK TO BACK
		W16-7P(↘)	24 x 12										
		W11-2	30 x 30										
		W16-7P(↙)	24 x 12										
	S31-10	R1-5L	30 x 30		14'		1						
	S31-11	R1-6	24 x 36					1					
	S31-12	R1-6										1	
S-32	S32-1	W11-2	30 x 30			16'-6"	1						BACK TO BACK
		W16-7P(↘)	24 x 12										
		W11-2	30 x 30										
		W16-7P(↙)	24 x 12										
	S32-2	R10-23	24 x 30										ON MAST ARM, (E), (N)
	S32-3	R10-6	24 x 36		14'-6"		1						
	S32-4	W11-2	24 x 24		15'-6"		1						BACK TO BACK
		W16-7P(↘)	24 x 12										
		W11-2	24 x 24										
		W16-7P(↘)	24 x 12										
	S32-5	R10-23	24 x 30										ON MAST ARM, (E), (N)
SHEET TOTAL							14	3	1	4		3	

SIGN QUANTITIES

SQ-12

STATE OF CALIFORNIA - DEPARTMENT OF TRANSPORTATION
Caltrans TRAFFIC

FUNCTIONAL SUPERVISOR: RAJESH OBEROI
CALCULATED-DESIGNED BY: LILY TING
CHECKED BY: RAJESH OBEROI
REVISED BY: RO
DATE REVISED: 1-27-16

LAST REVISION DATE PLOTTED => 07-MAR-2016
01-08-16 TIME PLOTTED => 13:00

Dist	COUNTY	ROUTE	POST MILES TOTAL PROJECT	SHEET No.	TOTAL SHEETS
04	SM	82,84	1.4/25.1, 23.1/24.1	114	196

Lily Ting 2-16-16
REGISTERED CIVIL ENGINEER DATE

2-16-16
PLANS APPROVAL DATE

REGISTERED PROFESSIONAL ENGINEER Lily Y. Ting No. 37330 Exp. 6-30-16 CIVIL STATE OF CALIFORNIA

THE STATE OF CALIFORNIA OR ITS OFFICERS OR AGENTS SHALL NOT BE RESPONSIBLE FOR THE ACCURACY OR COMPLETENESS OF SCANNED COPIES OF THIS PLAN SHEET.

ROADSIDE SIGN QUANTITIES

SHEET No.	SIGN No. (SIGN-No.)	MUTCD CODE	SIGN PANEL SIZE (L x D)	POST SIZE AND LENGTH			ROADSIDE SIGN	INSTALL ROADSIDE SIGN PANEL ON EXISTING POST	INSTALL SIGN (STRAP AND SADDLE BRACKET METHOD)	REMOVE ROADSIDE SIGN (WOOD POST)	REMOVE ROADSIDE SIGN (METAL POST)	REMOVE ROADSIDE SIGN PANEL	REMARKS
			INCHES	4" x 4"	4" x 6"	6" x 6"	ONE POST	EA					
S-32	S32-6	W11-2	30 x 30			16'-6"	1						BACK TO BACK
		W16-7P(⬊)	24 x 12										
		W11-2	30 x 30										
		W16-7P(⬋)	24 x 12										
	S32-7	R10-6	24 x 36		14'-6"		1						
	S32-8	R1-6										1	
	S32-9	R1-6	24 x 36						1				
	S32-10	R1-6										1	
		R6-1R											
		R6-1R											
	S32-11	R1-6	24 x 36						1				
		R6-1R	36 x 12										
		R6-1R	36 x 12										
	S32-12	R10-3	9 x 12										ON PED PUSH BUTTON, (E), (NO)
	S32-13	R10-3	9 x 12										ON PED PUSH BUTTON, (E), (NO)
S-33	S33-1	W11-2	24 x 24		15'-6"		1			1			BACK TO BACK
		W16-7P(⬊)	24 x 12										
		W11-2	24 x 24										
		W16-7P(⬊)	24 x 12										
		R1-6	24 x 36										
	S33-2	W11-2											
		W16-7p											
		W11-2											
		W16-7p											
		R1-6											
	S33-3	W11-2	30 x 30			16'-6"	1						
		W16-7P(⬊)	24 x 12										
		W11-2	30 x 30										BACK TO BACK
		W16-7P(⬋)	24 x 12										
	S33-4	R1-5L	30 x 30		14'		1						
	S33-5	R3-18	24 x 24						1				
		R1-6	24 x 36										
		R6-1R	36 x 12										
	S33-6	R3-18										1	
		R1-6											
		R6-1R											
	S33-7	W11-2	30 x 30			16'-6"	1						
		W16-7P(⬊)	24 x 12										
		W11-2	30 x 30										BACK TO BACK
		W16-7P(⬋)	24 x 12										
	S33-8	R1-5L	30 x 30		14'		1						
SHEET TOTAL							7		3	1		3	
SHEET SQ-1 TOTAL							16	2	1	3		4	
SHEET SQ-2 TOTAL							17					4	
SHEET SQ-3 TOTAL							16	3		1		4	
SHEET SQ-4 TOTAL							15		1	4		1	
SHEET SQ-5 TOTAL							12	2		1	4	3	
SHEET SQ-6 TOTAL							17			2		1	
SHEET SQ-7 TOTAL							15	2		3		1	
SHEET SQ-8 TOTAL							14		3			5	
SHEET SQ-9 TOTAL							12	4		6		4	
SHEET SQ-10 TOTAL							16	5		5		7	
SHEET SQ-11 TOTAL							13	8		6		9	
SHEET SQ-12 TOTAL							14	3	1	4		3	
GRAND TOTAL							184	29	9	36	4	49	

SIGN QUANTITIES

SQ-13

STATE OF CALIFORNIA - DEPARTMENT OF TRANSPORTATION
Caltrans
TRAFFIC

FUNCTIONAL SUPERVISOR: RAJESH OBEROI
CALCULATED-DESIGNED BY: LILY TING
CHECKED BY: RAJESH OBEROI
REVISED BY: RO
DATE REVISED: 1-27-16

LAST REVISION 02-05-16
DATE PLOTTED => 07-MAR-2016
TIME PLOTTED => 13:00

Dist	COUNTY	ROUTE	POST MILES TOTAL PROJECT	SHEET No.	TOTAL SHEETS
04	SM	82,84	1.4/25.1, 23.1/24.1	115	196

Lily Ting 2-16-16
REGISTERED CIVIL ENGINEER DATE

2-16-16
PLANS APPROVAL DATE

REGISTERED PROFESSIONAL ENGINEER Lily Y. Ting No. 37330 Exp. 6-30-16 CIVIL STATE OF CALIFORNIA

THE STATE OF CALIFORNIA OR ITS OFFICERS OR AGENTS SHALL NOT BE RESPONSIBLE FOR THE ACCURACY OR COMPLETENESS OF SCANNED COPIES OF THIS PLAN SHEET.

ROADSIDE SIGN PANEL QUANTITIES

SIGN No. (SIGN-No.)	MUTCD CODE	SIGN PANEL SIZE (L x D) INCHES	SIGN AREA SQFT	No. OF SIGNS	SINGLE FACED	BACKGROUND SHEETING COLOR	BACKGROUND RETRO-REFLECTIVE ASTM TYPE	LEGEND SHEETING COLOR	LEGEND RETRO-REFLECTIVE ASTM TYPE	PROTECTIVE OVERLAY PREMIUM	ROADSIDE SIGNS FURNISH SINGLE ALUMINUM SHEET (SQFT)	ROADSIDE SIGNS FURNISH SINGLE SHEET ALUMINUM SIGN FOR RETROREFLECTIVE SHEETING (TYPE XI) UNFRAMED 0.063" (SQFT)	RETRO-REFLECTIVE SHEETING (TYPE XI)
S1-1, S1-2, S1-5, S1-6, S2-1, S2-4, S3-2, S3-5, S4-1, S4-5, S5-2, S5-6, S6-2, S6-9, S7-2, S7-5, S8-2, S8-4, S9-1, S9-7, S10-2, S10-6, S11-3, S11-7, S12-1, S12-7, S13-2, S13-12, S14-5, S14-9, S15-1, S15-3, S16-4, S17-1, S17-4, S18-2, S18-5, S19-1, S19-4, S20-1, S20-4, S21-2, S21-4, S22-1, S22-4, S23-2, S23-6, S24-2, S24-5, S25-2, S25-8, S26-2, S26-4, S27-1, S27-10, S29-2, S29-11, S30-4, S30-14, S31-1, S31-9, S32-1, S32-6, S33-3, S33-7	W11-2	30 x 30	6.25	65	X	YELLOW	XI	BLACK	0	X		406.25	406.25
	W16-7p(↘)	24 x 12	2	65	X	YELLOW	XI	BLACK	0	X		130	130
	W11-2	30 x 30	6.25	65	X	YELLOW	XI	BLACK	0	X		406.25	406.25
	W16-7p(↙)	24 x 12	2	65	X	YELLOW	XI	BLACK	0	X		130	130
S16-1	W11-2	30 x 30	6.25	1	X	YELLOW	XI	BLACK	0	X		6.25	6.25
	W16-7p(↘)	24 x 12	2	1	X	YELLOW	XI	BLACK	0	X		2	2
S16-2	W11-2	30 x 30	6.25	1	X	YELLOW	XI	BLACK	0	X		6.25	6.25
	W16-7p(↙)	24 x 12	2	1	X	YELLOW	XI	BLACK	0	X		2	2
S19-8, S23-5, S23-8, S26-7, S26-9, S26-14, S26-18, S27-6, S27-12, S28-1, S28-9, S28-11, S28-15, , S29-6, S29-17, S30-2, S30-8, S30-18	W11-2	30 x 30	6.25	18	X	YELLOW	XI	BLACK	0	X		112.5	112.5
	W16-9p	24 x 12	2	18	X	YELLOW	XI	BLACK	0	X		36	36
S1-4, S1-8, S2-2, S2-5, S3-3, S3-7, S4-3, S4-6, S7-3, S7-7, S8-3, S8-5, S15-2, S15-4, S16-3, S16-5, S17-3, S17-6, S20-2, S20-7, S21-3, S21-5, S22-2, S22-5, S23-3, S23-7, S24-3, S24-6, S26-3, S26-11,S26-12, S26-20, S27-3, S27-14, S27-17, S27-19, S31-3, S31-10, S31-6, S33-4, S33-8	R1-5L	30 x 30	6.25	41	X	WHITE	IX	BLACK	0	X	256.25		
S2-3, S3-4, S4-4, S6-3, S7-1, S8-1, S9-4, S10-1, S11-5, S12-6, S13-11, S14-1, S20-3, S21-1, S22-3, S23-1, S26-1, S31-2, S31-8, S32-4, S33-1	W11-2	24 x 24	4	21	X	YELLOW	XI	BLACK	0	X		84	84
	W16-7p(↘)	24 x 12	2	21	X	YELLOW	XI	BLACK	0	X		42	42
	W11-2	24 x 24	4	21	X	YELLOW	XI	BLACK	0	X		84	84
	W16-7p(↙)	24 x 12	2	21	X	YELLOW	XI	BLACK	0	X		42	42
S27-2, S27-8	W11-2	24 x 24	4	2	X	YELLOW	XI	BLACK	0	X		8	8
	W16-7p(↘)	24 x 12	2	2	X	YELLOW	XI	BLACK	0	X		4	4
S5-1, S5-5, S6-1, S6-8, S9-2, S9-8, S10-3, S10-5, S11-1, S11-6, S12-4, S12-5, S13-3, S13-10, S14-7, S14-8, S18-4, S18-6, S19-3, S19-5, S25-1, S25-9, S29-1, S29-10, S30-3, S30-15, S32-2, S32-5	R10-23	24 x 30	5	28	X	WHITE	IX	RED/BLACK	XI/O	X	140		
S5-7, S25-12	W11-2	18 x 18	2.25	2	X	YELLOW	XI	BLACK	0	X		4.5	4.5
	W16-7p(↘)	24 x 12	2	2	X	YELLOW	XI	BLACK	0	X		4	4
	W11-2	18 x 18	2.25	2	X	YELLOW	XI	BLACK	0	X		4.5	4.5
	W16-7p(↙)	24 x 12	2	2	X	YELLOW	XI	BLACK	0	X		4	4
S26-3, S26-12, S27-7, S27-14, S31-5, S31-11, S32-9, S32-11, S33-1, S33-5	R1-6	24 x 36	6	10	X	YELLOW/ WHITE	XI/ IX	RED/BLACK	XI/O	X		60	60
S26-17, S27-4, S27-11, S28-3, S28-8, S28-13, S29-5, S29-16, S30-7	W11-1	30 x 30	6.25	9	X	YELLOW	XI	BLACK	0	X		56.25	56.25
						YELLOW	XI	BLACK	0	X		56.25	56.25
S7-4, S30-11	W3-3	36 x 36	9	2	X	YELLOW	XI	BLACK	0	X		18	18
S5-4, S5-8, S6-4, S6-10, S9-3, S9-9, S10-4, S10-8, S11-4, S11-9, S12-3, S12-8, S13-4, S13-13, S14-6, S14-11, S18-3, S18-7, S19-6, S19-9, S25-4, S25-11, S29-4, S29-14, S30-6, S30-16, S32-3, S32-7	R10-6	24 x 36	6	28	X	WHITE	IX	BLACK	0	X	168		
S6-6, S6-7, S13-15, S14-2, S20-6, S25-6, S27-7, S27-14, S31-5, S33-5	R3-18	24 x 24	4	10	X	WHITE	IX	RED/BLACK	XI/O	X	40		

SIGN QUANTITIES

SQ-14

STATE OF CALIFORNIA - DEPARTMENT OF TRANSPORTATION
Caltrans TRAFFIC

FUNCTIONAL SUPERVISOR: RAJESH OBEROI
CALCULATED-DESIGNED BY: LILY TING
CHECKED BY: RAJESH OBEROI
REVISED BY: RO
DATE REVISED: 1-27-16

LAST REVISION 02-05-16 | DATE PLOTTED => 07-MAR-2016 | TIME PLOTTED => 13:00

Dist	COUNTY	ROUTE	POST MILES TOTAL PROJECT	SHEET No.	TOTAL SHEETS
04	SM	82,84	1.4/25.1, 23.1/24.1	116	196

Lily Ting 2-16-16
REGISTERED CIVIL ENGINEER DATE

2-16-16
PLANS APPROVAL DATE

REGISTERED PROFESSIONAL ENGINEER Lily Y. Ting No. 37330 Exp. 6-30-16 CIVIL STATE OF CALIFORNIA

THE STATE OF CALIFORNIA OR ITS OFFICERS OR AGENTS SHALL NOT BE RESPONSIBLE FOR THE ACCURACY OR COMPLETENESS OF SCANNED COPIES OF THIS PLAN SHEET.

ROADSIDE SIGN PANEL SUMMARY QUANTITIES (CONTINUE)

SIGN No. (SIGN-No.)	MUTCD CODE	SIGN PANEL SIZE (L x D) INCHES	SIGN AREA SQFT	No. OF SIGNS	SINGLE FACED	BACKGROUND SHEETING COLOR	BACKGROUND RETRO-REFLECTIVE ASTM TYPE	LEGEND SHEETING COLOR	LEGEND RETRO-REFLECTIVE ASTM TYPE	PROTECTIVE OVERLAY PREMIUM	ROADSIDE SIGNS FURNISH SINGLE ALUMINUM SHEET (SQFT)	ROADSIDE SIGNS FURNISH SINGLE SHEET ALUMINUM SIGN FOR RETROREFLECTIVE SHEETING (TYPE XI) UNFRAMED 0.063" (SQFT)	RETRO-REFLECTIVE SHEETING (TYPE XI)
S6-5, S8-6	R49(CA)	42 x 18	5.25	2	X	WHITE	IX	BLACK	0	X	10.50		
S31-5	R3-4	24 x 24	4	1	X	WHITE	IX	RED/BLACK	XI/0	X	4		
S13-6, S13-8, S13-15, S28-4, S28-6	R3-2	24 x 24	4	5	X	WHITE	IX	RED/BLACK	XI/0	X	20		
S3-9, S3-11, S7-9, S9-11, S14-2, S20-6, S21-7, S26-3, S26-12, S27-7, S27-14, S28-6, S29-9, S29-12, S30-13, S31-5, S32-11, S32-11, S33-5	R6-1R	36 x 12	3	19	X	WHITE	IX	BLACK	0	X	57		
S11-11, S28-17, S29-20	R6-1L	36 x 12	3	3	X	WHITE	IX	BLACK	0	X	9		
S9-10	R32(CA)	12 x 18	1.5	1	X	WHITE	IX	GREEN	XI	X	1.5		
S23-11	R48(CA)	36 x 48	12	1	X	WHITE	IX	BLACK	0	X	12		
S30-21	R48-1(CA)	36 x 18	4.5	1	X	WHITE	IX	BLACK	0	X	4.5		
S30-21	R2-1(35)	36 x 48	12	1	X	WHITE	IX	BLACK	0	X	12		
S28-19	OM1-3	18 x 18	2.25	1	X	YELLOW	XI	NA	NA	X		2.25	2.25
S1-10	SR56(CA)	36 x 54	13.5	1	X	WHITE	IX	BLACK YELLOW RED/GREEN	0 X1 X1/XI	X	13.5		
S5-10, S5-11, S9-12, S9-13, S10-9, S10-10, S11-12, S11-13, S12-9, S12-10, S13-16, S13-17, S14-12, S14-13, S18-8, S18-9, S19-10, S19-11, S25-13, S25-14, S29-21, S29-22, S30-22, S30-23 S32-12, S32-13	R10-3	9 x 12	0.75	26	X	WHITE	IX	BLACK	0	X	19.5		
TOTAL											767.75	1711.25	1711.25

SIGN QUANTITIES

SQ-15

REVISED BY	DATE REVISED
RO	1-27-16

LILY TING — CALCULATED-DESIGNED BY
RAJESH OBEROI — CHECKED BY
RAJESH OBEROI — FUNCTIONAL SUPERVISOR

STATE OF CALIFORNIA - DEPARTMENT OF TRANSPORTATION
Caltrans
TRAFFIC

LAST REVISION 02-05-16 | DATE PLOTTED => 07-MAR-2016 | TIME PLOTTED => 13:00

Dist	COUNTY	ROUTE	POST MILES TOTAL PROJECT	SHEET No.	TOTAL SHEETS
04	SM	82,84	1.4/25.1, 23.1/24.1	117	196

Louis Fagliano 1-28-16
REGISTERED CIVIL ENGINEER DATE

2-16-16
PLANS APPROVAL DATE

REGISTERED PROFESSIONAL ENGINEER
Louis S. Fagliano
No. 42079
Exp. 3-31-16
CIVIL
STATE OF CALIFORNIA

THE STATE OF CALIFORNIA OR ITS OFFICERS OR AGENTS SHALL NOT BE RESPONSIBLE FOR THE ACCURACY OR COMPLETENESS OF SCANNED COPIES OF THIS PLAN SHEET.

MINOR CONCRETE (CURB, SIDEWALK AND CURB RAMP)

SHEET No.	STATION	CURB TYPE A1-6	CURB TYPE A2-6	SIDEWALK	CURB RAMP TYPE CASE A
		CY			
L-1	"C1" 44+80.42 TO 45+51.67		4.22	6.06	0.98
	"C2" 45+47.30 TO 46+18.90		4.23	5.84	1.96
L-2	"M1" 66+83.73 TO 67+58.89		4.43	7.57	1.96
L-3	"B1" 101+17.95 TO 101+83.38	1.69			
	45.1′ Rt "B" 101+00 TO 101+19.40				0.98
L-4	"P1" 45+54.98 TO 46+20.44		3.86	5.94	0.98
	"P2" 45+51.05 TO 46+55.28		6.15	10.59	1.96
L-5	"P3" 51+96.96 TO 52+67.04		4.14	5.28	1.96
L-6	"EL39" 484+40.88 TO 486+48.50	5.37			
L-7	"O1" 601+45.41 TO 601+53.54	0.21			
L-8	"S1" 785+63.86 TO 785+77.41	0.35			
	"S2" 798+67.34 TO 798+89.06	0.56			
TOTAL		8.18	27.03	41.28	10.78
GRAND TOTAL		87.27			

MINOR CONCRETE (ISLAND PAVING)

SHEET No.	STATION	ISLAND (PAVING)
		CY
L-3	"B1" 101+17.95 TO 101+83.38	2.06
L-6	"EL39" 484+40.88 TO 486+48.50	11.92
TOTAL		13.98

ROADWAY QUANTITIES

SHEET No.	STATION	REMOVE CONCRETE	REMOVE BASE AND SURFACING	REMOVE CONCRETE CURB	REMOVE CONCRETE ISLAND (PORTIONS)	AGGREGATE BASE (CLASS 3)	HOT MIX ASPHALT (TYPE A)	PRIME COAT
		CY					TON	
L-1	"C1" 44+80.42 TO 45+51.67	4.62	7.74			10.64		
	"C2" 45+47.30 TO 46+18.90	5.56	7.81			11.82		
L-2	"M1" 66+83.73 TO 67+58.89	7.85	7.79			14.44		
L-3	"B1" 101+17.95 TO 101+83.38		4.28			3.13	2.45	0.08
	45.1′ Rt "B" 101+00 TO 101+19.40	1.23				1.48		
L-4	"P1" 45+54.98 TO 46+20.44	5.10	6.79			10.49		
	"P2" 45+51.05 TO 46+55.28	8.38	12.82			19.01		
L-5	"P3" 51+96.96 TO 52+67.04	4.08	7.19			9.49		
L-6	"EL39" 484+40.88 TO 486+48.50		21.85			18.07	7.79	0.25
L-7	"O1" 601+45.41 TO 601+53.54			0.41	0.86		0.87	0.03
L-8	"S1" 785+63.86 TO 785+77.41			0.56	1.59		1.61	0.05
	"S2" 798+67.34 TO 798+89.06			0.74	2.24		2.27	0.07
TOTAL		36.82	76.27	1.71	4.69	98.57	14.99	0.48

SUMMARY OF QUANTITIES

Q-1

REVISED BY	DATE REVISED
LF	1-27-16

CHAU NGUYEN — CALCULATED-DESIGNED BY
LOUIS FAGLIANO — CHECKED BY
TAM LY — FUNCTIONAL SUPERVISOR

STATE OF CALIFORNIA - DEPARTMENT OF TRANSPORTATION
Caltrans
DESIGN

LAST REVISION 01-07-16 | DATE PLOTTED => 07-MAR-2016 | TIME PLOTTED => 13:00

Dist	COUNTY	ROUTE	POST MILES TOTAL PROJECT	SHEET No.	TOTAL SHEETS
04	SM	82,84	1.4/25.1, 23.1/24.1	118	196

Louis Fagliano 1-28-16
REGISTERED CIVIL ENGINEER DATE

2-16-16
PLANS APPROVAL DATE

REGISTERED PROFESSIONAL ENGINEER Louis S. Fagliano No. 42079 Exp. 3-31-16 CIVIL STATE OF CALIFORNIA

THE STATE OF CALIFORNIA OR ITS OFFICERS OR AGENTS SHALL NOT BE RESPONSIBLE FOR THE ACCURACY OR COMPLETENESS OF SCANNED COPIES OF THIS PLAN SHEET.

TREATED WOOD WASTE

SHEET No.	STATION	LB
S-1	"RM1" 13+44.47	57.2
	"RM1" 14+16.82	57.2
S-7	"RM1" 131+33.70	57.2
S-11	"P" 51+69.03	57.2
	"P" 52+07.28	57.2
S-12	"RM" 64+82.84	57.2
S-13	"RM" 92+71.57	57.2
S-17	"RM" 243+85.11	57.2
	"RM" 245+00	57.2
S-19	"EL38" 485+25.51	57.2
	"EL38" 486+38.79	57.2
S-25	"RM" 782+85.86	57.2
	"RM" 782+97.73	57.2
S-27	"RM" 798+63.75	57.2
S-29	"RM" 837+26.96	57.2
	"RM" 837+64.40	57.2
	"RM" 838+21.04	57.2
	"RM" 838+31.21	57.2
S-30	"RM" 850+68.05	57.2
	"RM" 850+72.08	57.2
S-30	"RC" 29+25.39	57.2
TOTAL		1201.2

TEMPORARY FENCE (TYPE ESA)

SHEET No.	STATION	LF
S-15	R+ "RM" 221+00 TO 222+50	190
S-16	R+ "RM" 225+10 TO 226+50	180
	L+ "RM" 225+00 TO 227+00	240
S-17	R+ "RM" 242+50 TO 246+50	440
	L+ "RM" 242+50 TO 246+50	440
TOTAL		1490

DETECTABLE WARNING SURFACE

SHEET No.	STATION	SQFT
L-1	"C1" 48+80.42 TO 45+51.67	12
	"C2" 45+47.30 TO 46+18.90	24
L-2	"M1" 66+83.73 TO 67+58.89	24
L-3	45.1' R+ "B" 101+00 TO 101+19.40	12
L-4	"P1" 45+54.98 TO 46+20.44	12
	"P2" 45+51.05 TO 46+55.28	24
L-5	"P3" 51+96.96 TO 52+67.04	24
TOTAL		132

SUMMARY OF QUANTITIES

Q-2

STATE OF CALIFORNIA - DEPARTMENT OF TRANSPORTATION
Caltrans® DESIGN
FUNCTIONAL SUPERVISOR: TAM LY
CALCULATED-DESIGNED BY: CHAU NGUYEN
CHECKED BY: LOUIS FAGLIANO
REVISED BY: LF
DATE REVISED: 1-27-16

LAST REVISION 12-31-15 | DATE PLOTTED => 07-MAR-2016 | TIME PLOTTED => 13:00

Dist	COUNTY	ROUTE	POST MILES TOTAL PROJECT	SHEET No.	TOTAL SHEETS
04	SM	82,84	1.4/25.1, 23.1/24.1	119	196

Elaine Wong 1-28-16
REGISTERED ELECTRICAL ENGINEER DATE

2-16-16
PLANS APPROVAL DATE

REGISTERED PROFESSIONAL ENGINEER Elaine T. Wong No. 13753 Exp. 6-30-17 ELECTRICAL STATE OF CALIFORNIA

THE STATE OF CALIFORNIA OR ITS OFFICERS OR AGENTS SHALL NOT BE RESPONSIBLE FOR THE ACCURACY OR COMPLETENESS OF SCANNED COPIES OF THIS PLAN SHEET.

ELECTRICAL INDEX

E-1	ELECTRICAL INDEX, NOTES, LEGEND AND ABBREVIATIONS
E-2 TO E-5	LIGHTING
E-6 TO E-8	SIGNAL AND LIGHTING
E-9 TO E-10	LIGHTING
E-11 TO E-20	SIGNAL AND LIGHTING
E-21 TO E-25	LIGHTING
E-26	SIGNAL AND LIGHTING
E-27 TO E-29	LIGHTING
E-30	SIGNAL AND LIGHTING
E-31	PEDESTRIAN HYBRID BEACONS AND LIGHTING
E-32	LIGHTING
E-33	SIGNAL AND LIGHTING
E-34	LIGHTING
E-35 TO E-36	ELECTRICAL DETAILS
E-37	ELECTRICAL QUANTITIES

ABBREVIATION:

PG&E PACIFIC GAS AND ELECTRIC

LEGEND:

TYPE 15 STANDARD WITH 15' LMA, 235 W LED UNLESS OTHERWISE NOTED

GENERAL NOTES:

BEFORE PERFORMING ANY WORK RELATED TO PG&E'S EXISTING STREET LUMINAIRE MOUNTED ON WOOD POLES, REMOVAL OF WOOD POLES OR OVERHEAD SERVICE WIRES, THE CONTRACTOR SHOULD CONTACT PG&E TO COORDINATE THE WORK. THE CONTRACTOR MUST CONTACT LEANN WUEST AT (510)598-7320, AT LEAST 2 DAYS BEFORE PERFORMING ANY WORK.

SALVAGED ELECTRICAL MATERIALS SHALL BE DELIVERED TO THE FOLLOWING LOCAL AGENCY;
CITY OF REDWOOD CITY
PUBLIC WORKS CORPORATION YARD
1400 BROADWAY STREET
REDWOOD CITY, CA 94063
CONTACT PERSON(S):
VIJAY NAND (650)780-7482
MIKE GIBBONS (650)780-7493
HOURS OF OPERATION 7:30 AM TO 4:30 PM

DALY CITY PUBLIC WORKS CORPORATION YARD
792 NIANTIC Ave
DALY CITY, CA 94014
CONTACT PERSON(S):
THOMAS LAZZERINI (650)826-1693
JOSEPH STABILE (650)438-6357
HOURS OF OPERATION 7:00 AM TO 3:00 PM MON TO FRI

CITY OF MILLBRAE
PUBLIC WORKS CORPORATION YARD
400 EAST MILLBRAE Ave
MILLBRAE, CA 94030
CONTACT PERSON:
CRAIG CENTIS (650)259-2376
HOURS OF OPERATION 7:00AM TO 3:30 PM

CITY OF BELMONT
BELMONT CORPORATION YARD
110 SEM LANE
BELMONT, CA 94002
CONTACT PERSON:
RICK LOCKE (650)222-6401 CELL
(650)637-4706 OFFICE
HOURS OF OPERATION 6:30 AM TO 4:30 PM TUE TO FRI

SAN MATEO PUBLIC WORKS DEPARTMENT
1949 PACIFIC Blvd
SAN MATEO, CA 94403
CONTACT PERSON:
BRAD B. UNDERWOOD (650)522-7300
HOURS OF OPERATION 8:00 AM TO 5:00 PM MON TO FRI

CITY OF COLMA
PUBLIC WORKS/ENGINEERING
1188 EL CAMINO REAL
COLMA, CA 94014
CONTACT PERSON:
BRAD DONOHUE (650)757-8895
HOURS OF OPERATION 8:00 AM TO 5:00 PM

PROJECT NOTES:

1. EXISTING PG&E SERVICE POINT. INSTALL TYPE H SERVICE (120/240 V).
2. EXISTING PG&E SERVICE POINT. (PULL BOX OR VAULT 120/240 V SERVICE).
3. INSTALL 3"C, PT. CONDUCTORS BY OTHERS.
4. INSTALL 2"C, 3#2 (120/240 V, SERVICE CONDUCTORS)
5. INSTALL No. 2 PG&E PULL BOX OR No. 6 PULL BOX EQUIPMENT.
6. INSTALL CONTROLLER CABINET PAD.
7. INSTALL TYPE III-AF SERVICE CABINET. INSTALL ITEMS (1) THROUGH (7), (23), (24) AND (25). SEE SHEET E-35 FOR DETAILS.
8. INSTALL TYPE III-AF SERVICE CABINET. INSTALL ITEMS (1) THROUGH (7), (12), (13), (14), (16), (17), (23), (24) AND (25). SEE SHEET E-35 FOR DETAILS.
9. INSTALL 2-12" SECTION SIGNAL HEAD. SEE SHEET E-36. INSTALL STATE-FURNISHED SIGN PANEL. SEE SIGN SHEETS.
10. EXISTING 2"C, 3#2 (120/240 V SERVICE CONDUCTORS).
11. INSTALL 2"C, 2#8 (240 V LIGHTING).
12. INSTALL 3"C, 2#8 (240 V LIGHTING).
13. INSTALL 2"C, 2#8 (240 V LIGHTING), 3#14 (PEU).
14. EXISTING 2"C, 2#6, 2#8, 3#14.
15. EXISTING 3"C, SIGNAL CONDUCTORS, 2#6, 2#8.
16. INSTALL 2"C, 2#6 (120 V SERVICE TO CONTROLLER).
17. INSTALL 2"C, 2#6 (120 V SERVICE TO CONTROLLER), 2#8 (LIGHTING), 3#14 (PEU).
18. INSTALL TYPE 15 STANDARD WITH 15' LMA, 235 W LED.
19. EXISTING LUMINAIRE ON WOODPOLE. LUMINAIRE TO BE REMOVED BY PG&E.
20. INSTALL PULL BOX TO ADJACENT FOUNDATION AND RESTORE LIGHTING CIRCUIT CONTINUITY.
21. INSTALL MODIFIED TYPE 15 STANDARD WITH 15' LMA, 185 W LED. SEE SES SHEET.
22. SEE SES SHEET.
23. RS EXISTING CITY LIGHTING, FA FOUNDATION AT THE OPTION OF THE CONTRACTOR, THE NEW FOUNDATION FOR THE NEW STANDARD CAN BE INSTALLED IN IT'S PLACE.
24. RS EXISTING CITY LIGHTING, FA FOUNDATION. INSTALL No. 5 PULL BOX IN PLACE AND MAKE NECESSARY CONNECTION TO RESTORE LIGHTING CIRCUIT CONTINUITY.
25. EXISTING CITY LIGHTING CIRCUIT.
26. EXISTING OH CONDUCTOR FOR LIGHTING. CONDUCTORS TO BE REMOVED BY PG&E.
27. EXISTING LUMINAIRE ON WOODPOLE. LUMINAIRE TO BE REMOVED BY PG&E.
28. RC EXISTING WOODPOLE AND LUMINAIRE.
29. PEDESTRIAN HYBRID BEACON SIGNAL HEAD. SEE DETAIL ON SHEET E-36 AND SES SHEETS (AS APPLICABLE).
30. EXISTING CITY LIGHTING STANDARD TO REMAIN.
31. INSTALL 2"C, 3 DLC.
32. INSTALL STATE-FURNISHED SIGN PANEL. SEE SIGN SHEETS AND ON SHEET E-36.
33. RC 3#14 AND INSTALL 2#6 (240 V LIGHTING, 3#14 (PEU)
34. INSTALL 2"C, 2 DLC.

PROJECT NOTES: (Cont)

35. EXISTING PG&E WOODPOLE WITH LUMINAIRE TO REMAIN.
36. INSTALL 2'C, 3DLC.
37. INSTALL BBS WITH 4 BATTERY PACK.

ELECTRICAL INDEX, NOTES, LEGEND AND ABBREVIATIONS

E-1

REVISED BY EW DATE REVISED 1-27-16
JESSIE CABUGAO ELAINE WONG
CALCULATED-DESIGNED BY CHECKED BY
FUNCTIONAL SUPERVISOR BEHZAD GOLEMOHAMMADI
STATE OF CALIFORNIA - DEPARTMENT OF TRANSPORTATION
Caltrans ELECTRICAL

LAST REVISION 12-31-15 DATE PLOTTED => 07-MAR-2016 TIME PLOTTED => 13:00

Dist	COUNTY	ROUTE	POST MILES TOTAL PROJECT	SHEET No.	TOTAL SHEETS
04	SM	82,84	1.4/25.1, 23.1/24.1	120	196

Elaine Wong 1-28-16
REGISTERED ELECTRICAL ENGINEER DATE

2-16-16
PLANS APPROVAL DATE

REGISTERED PROFESSIONAL ENGINEER Elaine T. Wong No. 13753 Exp. 6-30-17 ELECTRICAL STATE OF CALIFORNIA

THE STATE OF CALIFORNIA OR ITS OFFICERS OR AGENTS SHALL NOT BE RESPONSIBLE FOR THE ACCURACY OR COMPLETENESS OF SCANNED COPIES OF THIS PLAN SHEET.

NOTE:

FOR ACCURATE RIGHT OF WAY DATA, CONTACT RIGHT OF WAY ENGINEERING AT THE DISTRICT OFFICE.

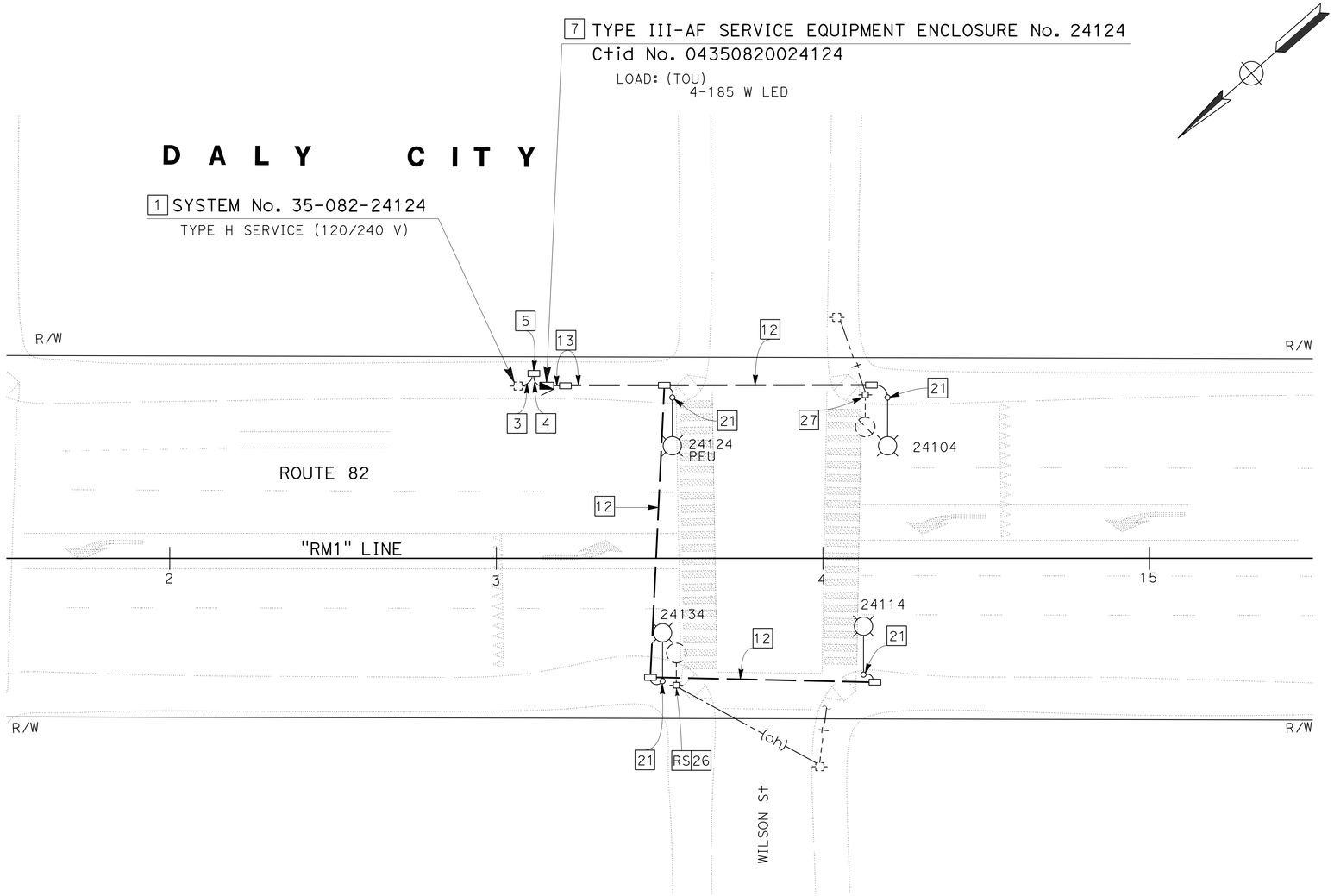

APPROVED FOR ELECTRICAL WORK ONLY

FOR NOTES, ABBREVIATION AND LEGEND, SEE SHEET E-1

LIGHTING
LOCATION No. 1
SCALE: 1" = 20'

E-2

CALCULATED-DESIGNED BY	JESSIE CABUGAO
CHECKED BY	ELAINE WONG
REVISED BY	EW
DATE REVISED	1-27-16
FUNCTIONAL SUPERVISOR	BEHZAD GOLEMOHAMMADI

STATE OF CALIFORNIA - DEPARTMENT OF TRANSPORTATION
Caltrans
ELECTRICAL

LAST REVISION 11-17-15
DATE PLOTTED => 07-MAR-2016
TIME PLOTTED => 13:00

Dist	COUNTY	ROUTE	POST MILES TOTAL PROJECT	SHEET No.	TOTAL SHEETS
04	SM	82,84	1.4/25.1, 23.1/24.1	121	196

Elaine Wong 1-28-16
REGISTERED ELECTRICAL ENGINEER DATE

2-16-16
PLANS APPROVAL DATE

REGISTERED PROFESSIONAL ENGINEER Elaine T. Wong No. 13753 Exp. 6-30-17 ELECTRICAL STATE OF CALIFORNIA

THE STATE OF CALIFORNIA OR ITS OFFICERS OR AGENTS SHALL NOT BE RESPONSIBLE FOR THE ACCURACY OR COMPLETENESS OF SCANNED COPIES OF THIS PLAN SHEET.

NOTE:

FOR ACCURATE RIGHT OF WAY DATA, CONTACT RIGHT OF WAY ENGINEERING AT THE DISTRICT OFFICE.

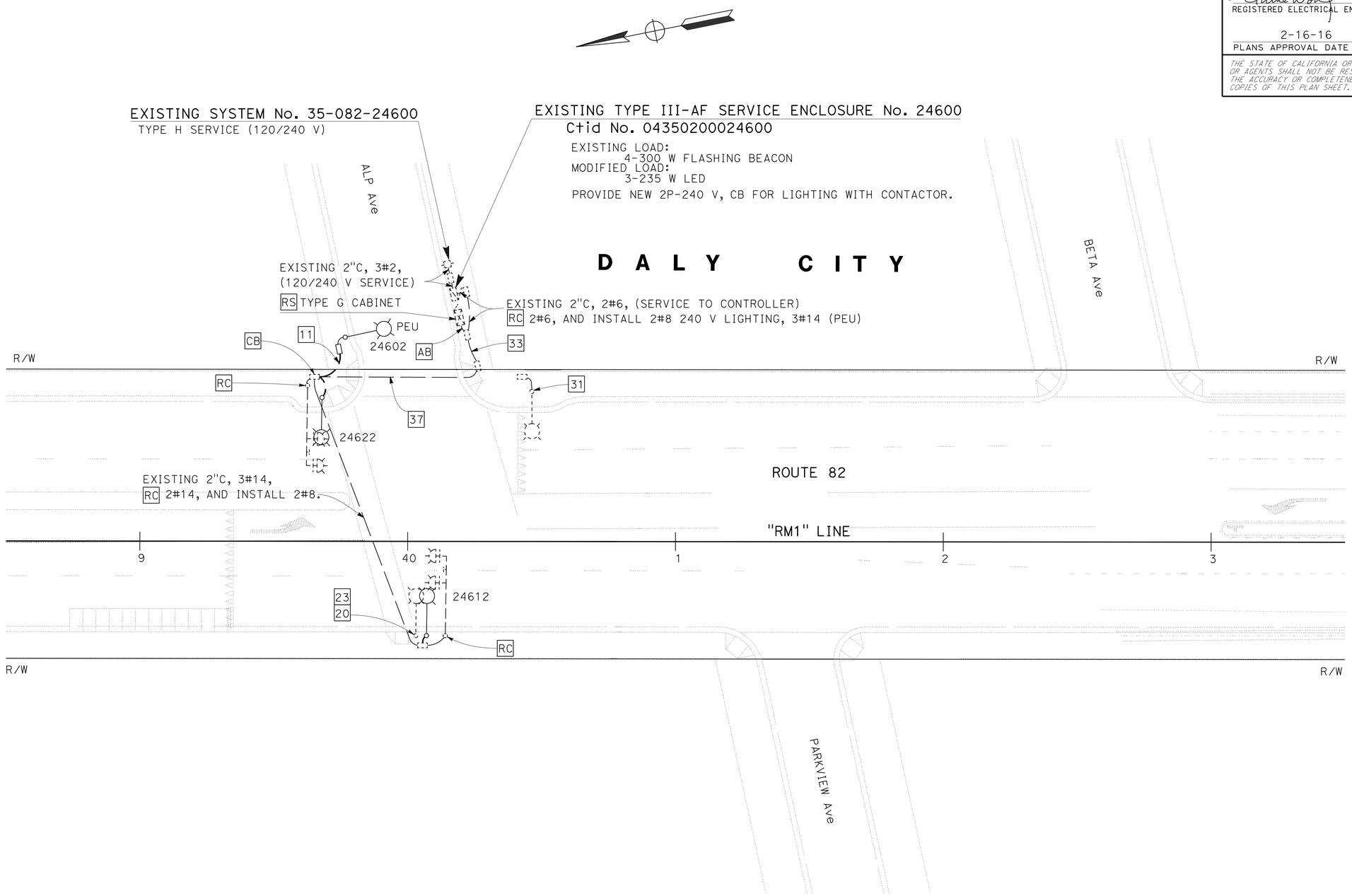

APPROVED FOR ELECTRICAL WORK ONLY

FOR NOTES, ABBREVIATION AND LEGEND, SEE SHEET E-1

LIGHTING
LOCATION No. 2
SCALE: 1" = 20'

E-3

REVISED BY	EW
DATE REVISED	1-27-16
JESSIE CABUGAO	ELAINE WONG
CALCULATED-DESIGNED BY	
CHECKED BY	
FUNCTIONAL SUPERVISOR	BEHZAD GOLEMOHAMMADI

STATE OF CALIFORNIA - DEPARTMENT OF TRANSPORTATION
Caltrans
ELECTRICAL

LAST REVISION 10-16-15 | DATE PLOTTED => 07-MAR-2016 | TIME PLOTTED => 13:00

Dist	COUNTY	ROUTE	POST MILES TOTAL PROJECT	SHEET No.	TOTAL SHEETS
04	SM	82,84	1.4/25.1, 23.1/24.1	122	196

Elaine Wong 1-28-16
REGISTERED ELECTRICAL ENGINEER DATE

2-16-16
PLANS APPROVAL DATE

REGISTERED PROFESSIONAL ENGINEER
Elaine T. Wong
No. 13753
Exp. 6-30-17
ELECTRICAL
STATE OF CALIFORNIA

THE STATE OF CALIFORNIA OR ITS OFFICERS OR AGENTS SHALL NOT BE RESPONSIBLE FOR THE ACCURACY OR COMPLETENESS OF SCANNED COPIES OF THIS PLAN SHEET.

NOTE:

FOR ACCURATE RIGHT OF WAY DATA, CONTACT RIGHT OF WAY ENGINEERING AT THE DISTRICT OFFICE.

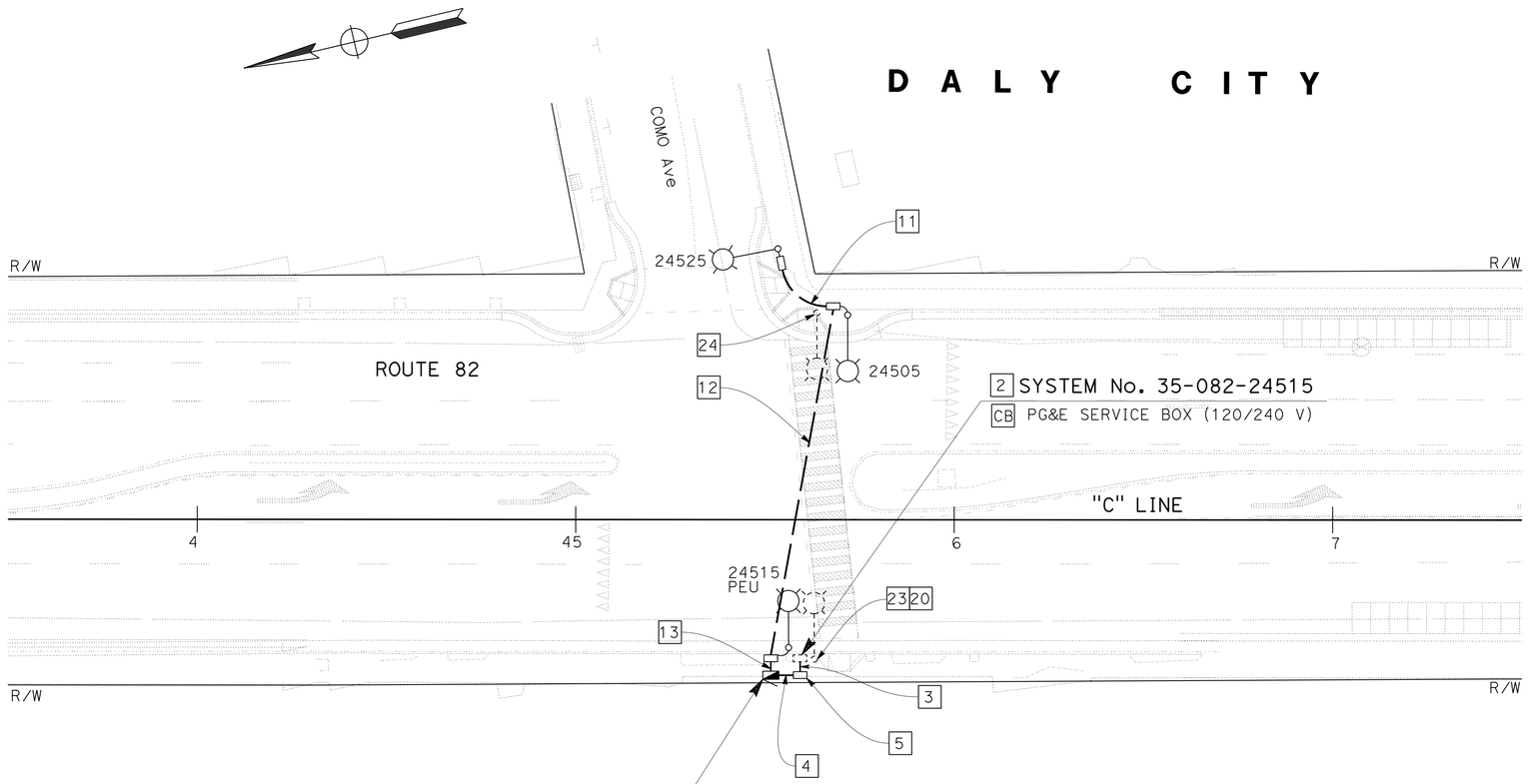

APPROVED FOR ELECTRICAL WORK ONLY

FOR NOTES, ABBREVIATION AND LEGEND, SEE SHEET E-1

LIGHTING
LOCATION No. 3
SCALE: 1" = 20'

E-4

REVISED BY	EW
DATE REVISED	1-27-16
JESSIE CABUGAO	ELAINE WONG
CALCULATED-DESIGNED BY	CHECKED BY
FUNCTIONAL SUPERVISOR	BEHZAD GOLEMOHAMMADI

STATE OF CALIFORNIA - DEPARTMENT OF TRANSPORTATION
Caltrans
ELECTRICAL

LAST REVISION 10-16-15
DATE PLOTTED => 07-MAR-2016
TIME PLOTTED => 13:00

NOTE:

FOR ACCURATE RIGHT OF WAY DATA, CONTACT
RIGHT OF WAY ENGINEERING AT THE DISTRICT OFFICE.

Dist	COUNTY	ROUTE	POST MILES TOTAL PROJECT	SHEET No.	TOTAL SHEETS
04	SM	82,84	1.4/25.1, 23.1/24.1	123	196

Elaine Wong 1-28-16
REGISTERED ELECTRICAL ENGINEER DATE

2-16-16
PLANS APPROVAL DATE

REGISTERED PROFESSIONAL ENGINEER
Elaine T. Wong
No. 13753
Exp. 6-30-17
ELECTRICAL
STATE OF CALIFORNIA

THE STATE OF CALIFORNIA OR ITS OFFICERS OR AGENTS SHALL NOT BE RESPONSIBLE FOR THE ACCURACY OR COMPLETENESS OF SCANNED COPIES OF THIS PLAN SHEET.

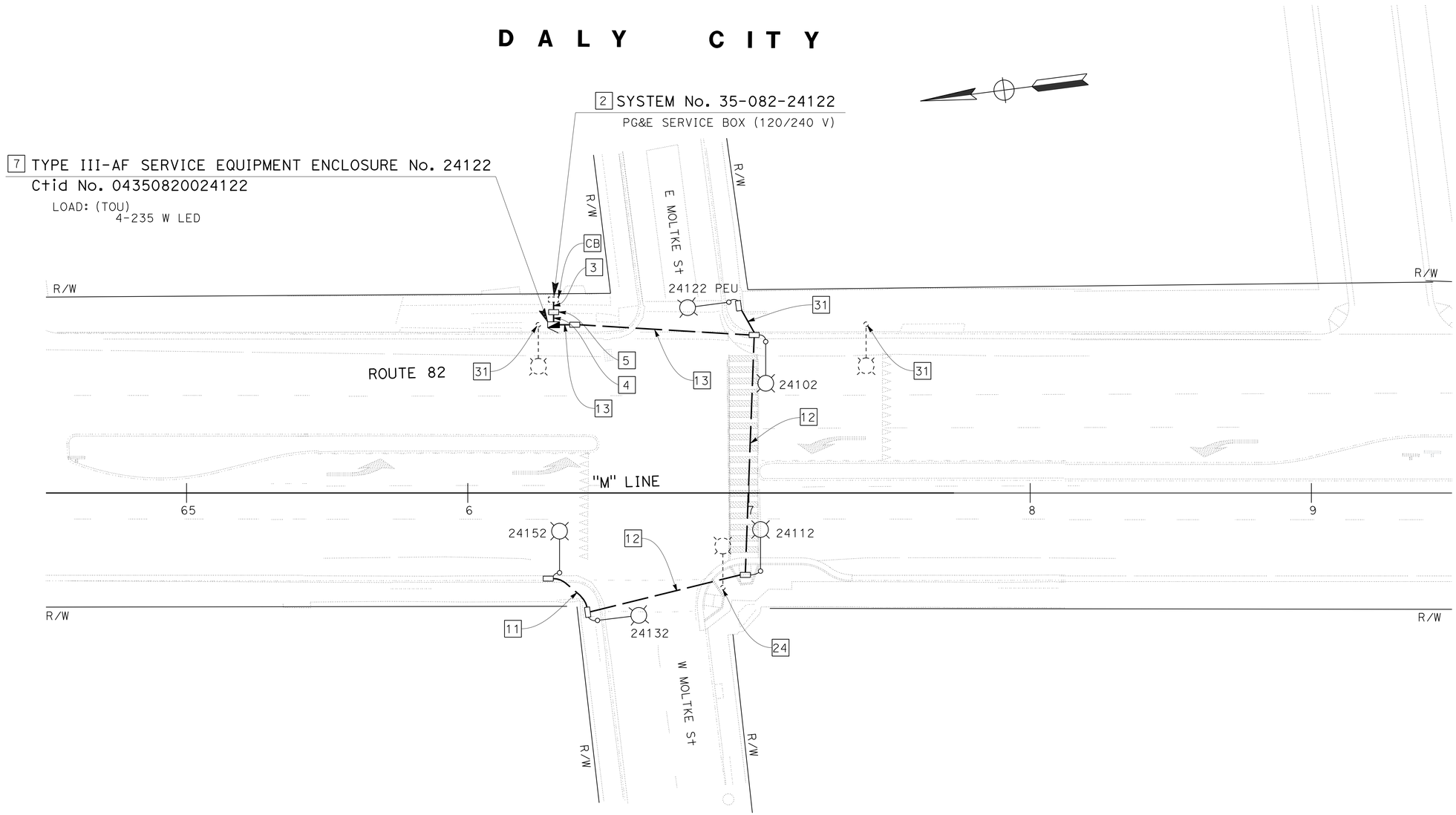

APPROVED FOR ELECTRICAL WORK ONLY

FOR NOTES, ABBREVIATION AND LEGEND, SEE SHEET E-1

LIGHTING
LOCATION No. 4
SCALE: 1" = 20'

E-5

STATE OF CALIFORNIA - DEPARTMENT OF TRANSPORTATION
Caltrans
ELECTRICAL

FUNCTIONAL SUPERVISOR: BEHZAD GOLEMOHAMMADI
CALCULATED-DESIGNED BY: JESSIE CABUGAO
CHECKED BY: ELAINE WONG
REVISED BY: EW
DATE REVISED: 1-27-16

LAST REVISION: 10-14-15
DATE PLOTTED => 07-MAR-2016
TIME PLOTTED => 13:00

Dist	COUNTY	ROUTE	POST MILES TOTAL PROJECT	SHEET No.	TOTAL SHEETS
04	SM	82,84	1.4/25.1, 23.1/24.1	124	196

Elaine Wong 1-28-16
REGISTERED ELECTRICAL ENGINEER DATE

2-16-16
PLANS APPROVAL DATE

REGISTERED PROFESSIONAL ENGINEER Elaine T. Wong No. 13753 Exp. 6-30-17 ELECTRICAL STATE OF CALIFORNIA

THE STATE OF CALIFORNIA OR ITS OFFICERS OR AGENTS SHALL NOT BE RESPONSIBLE FOR THE ACCURACY OR COMPLETENESS OF SCANNED COPIES OF THIS PLAN SHEET.

NOTE:

FOR ACCURATE RIGHT OF WAY DATA, CONTACT RIGHT OF WAY ENGINEERING AT THE DISTRICT OFFICE.

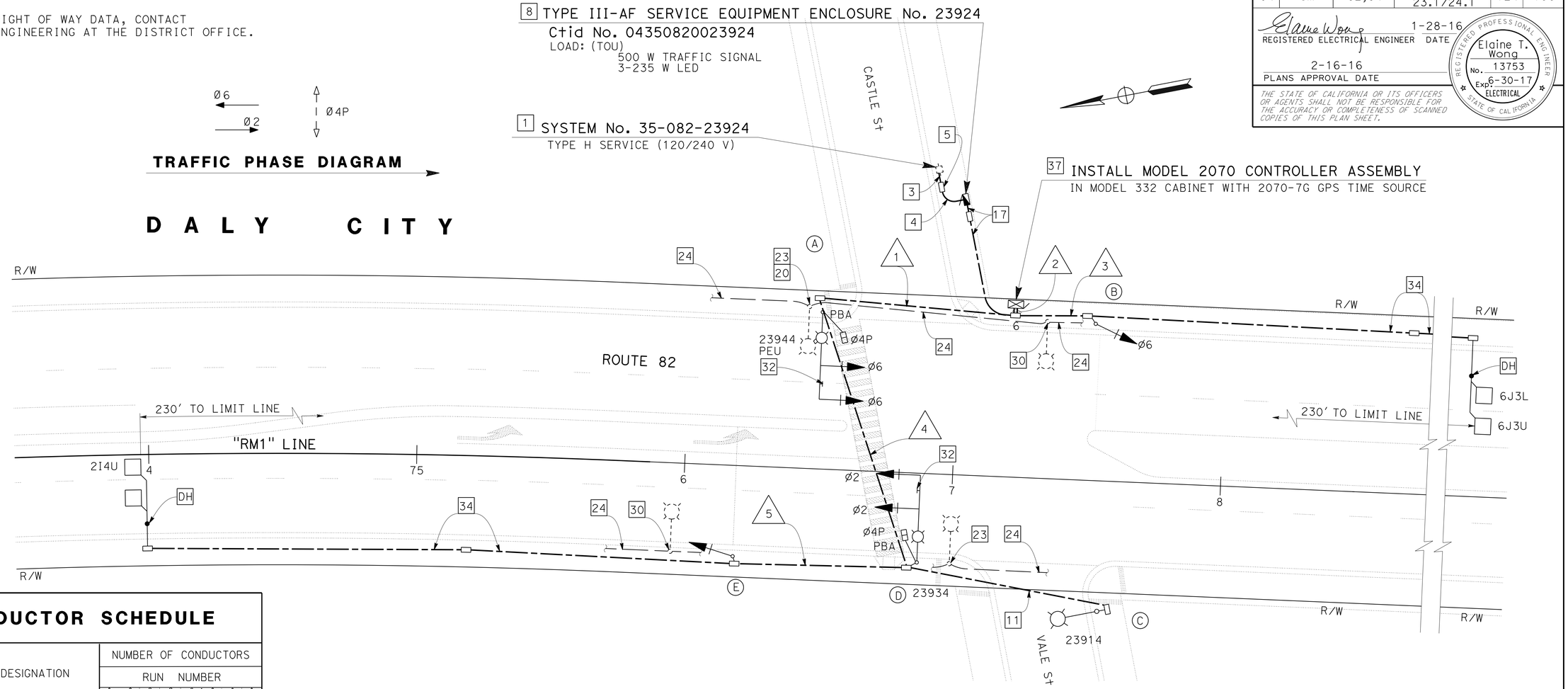

CONDUCTOR SCHEDULE

CONDUCTOR DESIGNATION	NUMBER OF CONDUCTORS RUN NUMBER 1	2	3	4	5				
No. 14 CONDUCTORS									
Ø2	8	8		8	2				
Ø6	6	8	2						
Ø2P	4	4		2					
PPBØ2	2	2		1					
PPB NEUTRAL	2	2		1					
PHOTO ELECTRIC UNIT (PEU)	3								
SPARES	6	6		3	3				
TOTAL No. 14	31	30	2	15	5				
No. 8 CONDUCTORS									
LIGHTING (240 V)	2			2					
SIGNAL NEUTRAL	2	2	1	1	1				
TOTAL No. 8	4	2	1	3	1				
DLC									
2I4U	1	1		1	1				
2I4L	1	1		1	1				
6J3U		1	1						
6J3L		1	1						
TOTAL DLC	2	4	2	2	2				
CONDUIT SIZE	3	2-3"	3	3	3				

POLE AND EQUIPMENT SCHEDULE

LOCATION	STANDARD TYPE	SMA	LMA	VEHICLE SIGNAL MOUNTING MAST ARM	POLE	PED SIGNAL MOUNTING	PBA ø	LED LUMINAIRE (WATTS)	SPECIAL REQUIREMENT
A	24A-4-100	35	15	MAS MAS		SV-1-T	←4		APS WITH LED COUNTDOWN PEDESTRIAN SIGNAL 29 F=15'
B	1-B				TV-1-T				9
C	15		15					235	
D	24A-4-100	35	15	MAS MAS		SV-1-T	←4		APS WITH LED COUNTDOWN PEDESTRIAN SIGNAL 29 F=15'
E	1-B				TV-1-T				9

APPROVED FOR ELECTRICAL WORK ONLY

FOR NOTES, ABBREVIATION AND LEGEND, SEE SHEET E-1

SIGNAL AND LIGHTING
LOCATION No. 5
SCALE: 1" = 20'

E-6

REVISED BY	DATE REVISED
EW	1-27-16

JESSIE CABUGAO — ELAINE WONG — CALCULATED-DESIGNED BY — CHECKED BY

FUNCTIONAL SUPERVISOR: BEHZAD GOLEMOHAMMADI

STATE OF CALIFORNIA - DEPARTMENT OF TRANSPORTATION — Caltrans — ELECTRICAL

LAST REVISION 12-18-15 — DATE PLOTTED => 07-MAR-2016 — TIME PLOTTED => 13:00

Dist	COUNTY	ROUTE	POST MILES TOTAL PROJECT	SHEET No.	TOTAL SHEETS
04	SM	82,84	1.4/25.1, 23.1/24.1	125	196

Elaine Wong 1-28-16
REGISTERED ELECTRICAL ENGINEER DATE

2-16-16
PLANS APPROVAL DATE

REGISTERED PROFESSIONAL ENGINEER Elaine T. Wong No. 13753 Exp. 6-30-17 ELECTRICAL STATE OF CALIFORNIA

THE STATE OF CALIFORNIA OR ITS OFFICERS OR AGENTS SHALL NOT BE RESPONSIBLE FOR THE ACCURACY OR COMPLETENESS OF SCANNED COPIES OF THIS PLAN SHEET.

NOTE:
FOR ACCURATE RIGHT OF WAY DATA, CONTACT RIGHT OF WAY ENGINEERING AT THE DISTRICT OFFICE.

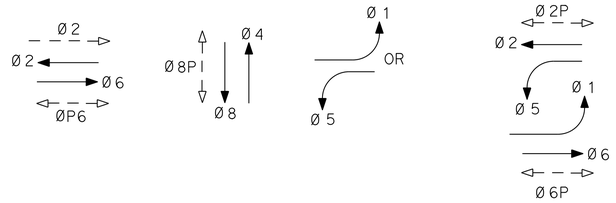

EXISTING TRAFFIC PHASE DIAGRAM
(NO CHANGE)

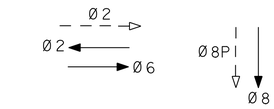

TRAFFIC PHASE DIAGRAM
("B" STREET)

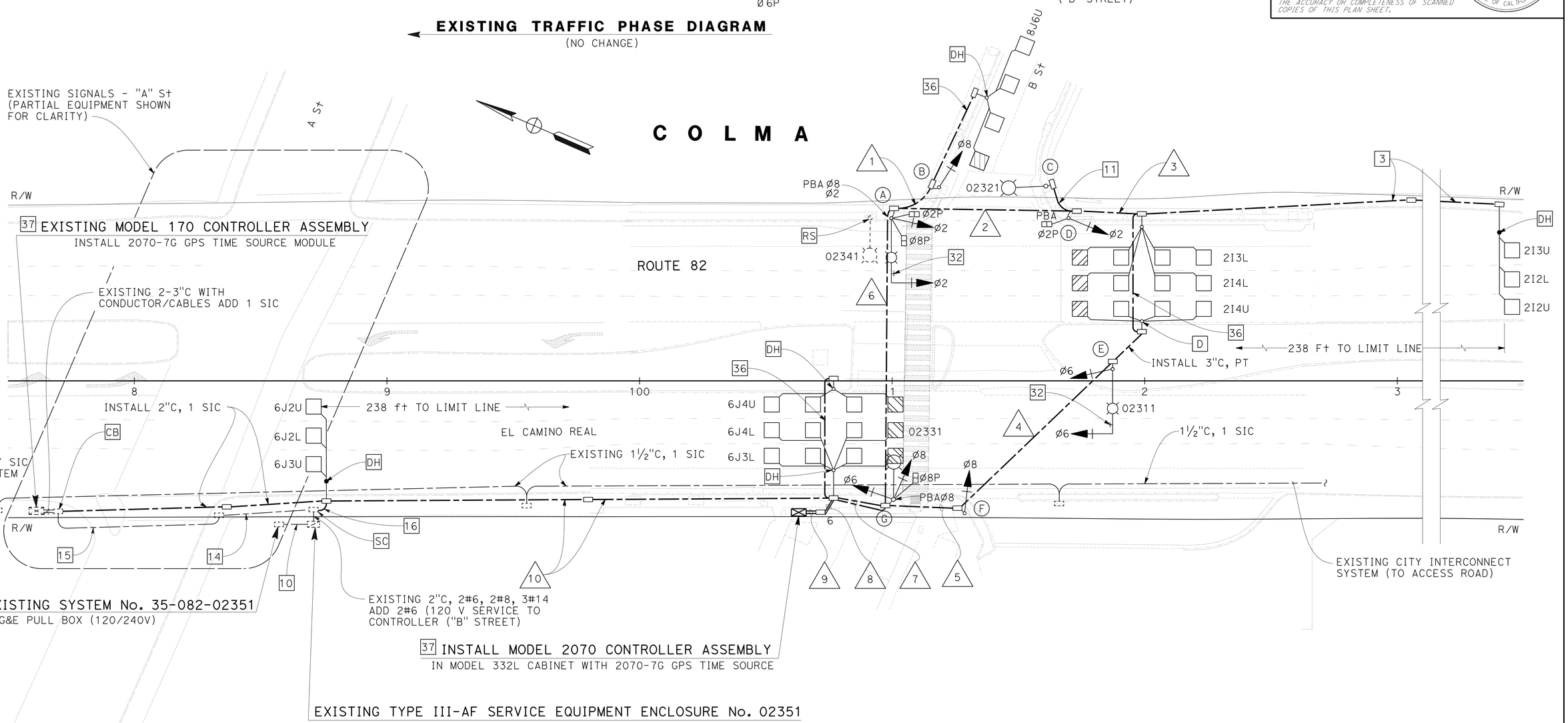

EXISTING TYPE III-AF SERVICE EQUIPMENT ENCLOSURE No. 02351
Ctid No. 04350820002351
EXISTING LOAD: (TOU)
2000 W TRAFFIC SIGNALS
2-185 W LED
2-235 W LED
LOAD AFTER MODIFICATION:
3000 W TRAFFIC SIGNALS
2-185 W LED
6-235 W LED
INSTALL 1-50A, 120V, IP CB FOR "B" STREET

SIGNAL AND LIGHTING
LOCATION No. 6
SCALE: 1" = 20'

APPROVED FOR ELECTRICAL WORK ONLY

FOR NOTES, ABBREVIATION AND LEGEND, SEE SHEET E-1

E-7

REVISED BY	DATE REVISED
EW	1-27-16

JESSIE CABUGAO — ELAINE WONG — CALCULATED-DESIGNED BY — CHECKED BY
FUNCTIONAL SUPERVISOR: BEHZAD GOLEMOHAMMADI

STATE OF CALIFORNIA - DEPARTMENT OF TRANSPORTATION
Caltrans
ELECTRICAL

LAST REVISION 01-13-16 | DATE PLOTTED => 07-MAR-2016 | TIME PLOTTED => 13:00

Dist	COUNTY	ROUTE	POST MILES TOTAL PROJECT	SHEET No.	TOTAL SHEETS
04	SM	82,84	1.4/25.1, 23.1/24.1	126	196

Elaine Wong 1-28-16
REGISTERED ELECTRICAL ENGINEER DATE

2-16-16
PLANS APPROVAL DATE

REGISTERED PROFESSIONAL ENGINEER Elaine T. Wong No. 13753 Exp. 6-30-17 ELECTRICAL STATE OF CALIFORNIA

THE STATE OF CALIFORNIA OR ITS OFFICERS OR AGENTS SHALL NOT BE RESPONSIBLE FOR THE ACCURACY OR COMPLETENESS OF SCANNED COPIES OF THIS PLAN SHEET.

CONDUCTOR SCHEDULE

CONDUCTOR DESIGNATION	NUMBER OF CONDUCTORS RUN NUMBER 1	2	3	4	5	6	7	8	9	10
No. 14 CONDUCTORS										
Ø2		3				6	6	6	6	
Ø6				3	3		6	6	6	
Ø8	3				3	3	6	6	6	
Ø2P		2				4	4	4	4	
Ø8P				1		2	4	4	4	
PPAØ2		1				2	2	2	2	
PPAØ8						1	2	2	2	
PPB NEUTRAL		1				1	2	2	2	
SPARES		3		3	3	3	6	6	6	
TOTAL No. 14	3	10		6	9	22	38	38	38	
DETECTOR CABLES										
2I2U		1	1			1	1	1	1	
2I2L		1	1			1	1	1	1	
23U		1	1			1	1	1	1	
2I3L		1	1			1	1	1	1	
2I4U		1	1			1	1	1	1	
2I4L		1	1			1	1	1	1	
6J2U								1	1	1
6J2L								1	1	1
6J3U								1	1	1
6J3L								1	1	
6J4U								1	1	
6J4L								1	1	
8J6U	1					1	1	1	1	
TOTAL DETECTOR CABLES	1	6	6			7	7	13	13	3
SIC (SIGNAL INTERCONNECT)								1	1	1
TOTAL SIC								1	1	1
No. 8 CONDUCTORS										
LIGHTING (240 V)		2		2	2	2	2			2
SIGNAL NEUTRAL	1	1		1	1	1	2	2	2	
TOTAL No. 8	1	3		3	3	3	4	2	2	2
No. 6 CONDUCTORS										
SERVICE TO CONTROLLER										
SIGNAL NEUTRAL								2	2	2
TOTAL No. 6								2	2	2
CONDUIT SIZE (INCHES)	2	3	3	3	3		2-3"	2-3"	2-3"	2

POLE AND EQUIPMENT SCHEDULE

LOCATION	STANDARD TYPE	SMA	LMA	VEHICLE SIGNAL MOUNTING MAST ARM	POLE	PED SIGNAL MOUNTING	PBA Ø	LED LUMINAIRE (WATTS)	SPECIAL REQUIREMENT
A	19A-4-100	25	15	MAS	SV-1-T	SP-2-T	2,8	235	APS LED WITH LED PEDESTRIAN SIGNAL COUNTDOWN
B	1-B				TV-1-T				
C	15		15					235	
D	1-B			MAS MAS	TV-1-T	SP-1-T	2		
E	19A-4-100	25	15		SV-1-T			235	
F	1-B				TV-1-T				
G	15TS		15		SV-2-T	SP-1-T		235	APS LED WITH LED PEDESTRIAN SIGNAL COUNTDOWN

SIGNAL AND LIGHTING
LOCATION No. 6

E-8

EW	1-27-16
REVISED BY	DATE REVISED
JESSIE CABUGAO	ELAINE WONG
CALCULATED-DESIGNED BY	CHECKED BY
FUNCTIONAL SUPERVISOR	BEHZAD GOLEMOHAMMADI

STATE OF CALIFORNIA - DEPARTMENT OF TRANSPORTATION
Caltrans
ELECTRICAL

LAST REVISION 01-13-16 | DATE PLOTTED => 07-MAR-2016 | TIME PLOTTED => 13:00

Dist	COUNTY	ROUTE	POST MILES TOTAL PROJECT	SHEET No.	TOTAL SHEETS
04	SM	82,84	1.4/25.1, 23.1/24.1	127	196

Elaine Wong 1-28-16
REGISTERED ELECTRICAL ENGINEER DATE

2-16-16
PLANS APPROVAL DATE

REGISTERED PROFESSIONAL ENGINEER
Elaine T. Wong
No. 13753
Exp. 6-30-17
ELECTRICAL
STATE OF CALIFORNIA

THE STATE OF CALIFORNIA OR ITS OFFICERS OR AGENTS SHALL NOT BE RESPONSIBLE FOR THE ACCURACY OR COMPLETENESS OF SCANNED COPIES OF THIS PLAN SHEET.

NOTE:

FOR ACCURATE RIGHT OF WAY DATA, CONTACT RIGHT OF WAY ENGINEERING AT THE DISTRICT OFFICE.

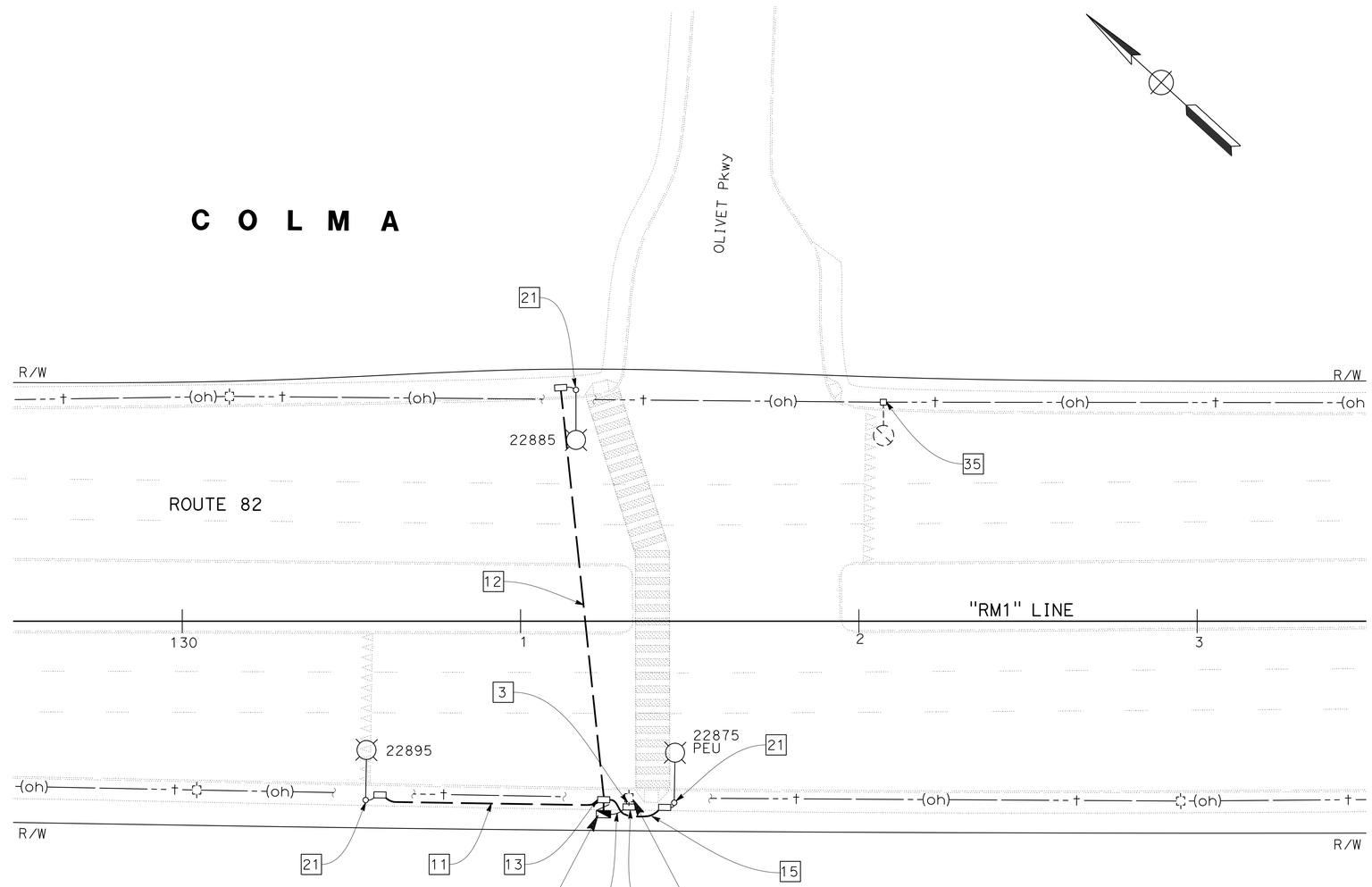

7 TYPE III-AF SERVICE EQUIPMENT ENCLOSURE No. 22875
Ctid No. 04350820022875
LOAD: (TOU)
3-185 W LED

1 SYSTEM No. 35-082-22875
TYPE H SERVICE BOX (120/240 V)

APPROVED FOR ELECTRICAL WORK ONLY

FOR NOTES, ABBREVIATION AND LEGEND, SEE SHEET E-1

LIGHTING
LOCATION No. 7
SCALE: 1" = 20'

E-9

EW	1-27-16
REVISED BY	DATE REVISED
JESSIE CABUGAO	ELAINE WONG
CALCULATED-DESIGNED BY	CHECKED BY
FUNCTIONAL SUPERVISOR	BEHZAD GOLEMOHAMMADI

STATE OF CALIFORNIA - DEPARTMENT OF TRANSPORTATION
ELECTRICAL
Caltrans

LAST REVISION 01-13-16 | DATE PLOTTED => 07-MAR-2016 | TIME PLOTTED => 13:00

Dist	COUNTY	ROUTE	POST MILES TOTAL PROJECT	SHEET No.	TOTAL SHEETS
04	SM	82,84	1.4/25.1, 23.1/24.1	128	196

Elaine Wong 1-28-16
REGISTERED ELECTRICAL ENGINEER DATE

2-16-16
PLANS APPROVAL DATE

REGISTERED PROFESSIONAL ENGINEER
Elaine T. Wong
No. 13753
Exp. 6-30-17
ELECTRICAL
STATE OF CALIFORNIA

THE STATE OF CALIFORNIA OR ITS OFFICERS OR AGENTS SHALL NOT BE RESPONSIBLE FOR THE ACCURACY OR COMPLETENESS OF SCANNED COPIES OF THIS PLAN SHEET.

NOTE:

FOR ACCURATE RIGHT OF WAY DATA, CONTACT RIGHT OF WAY ENGINEERING AT THE DISTRICT OFFICE.

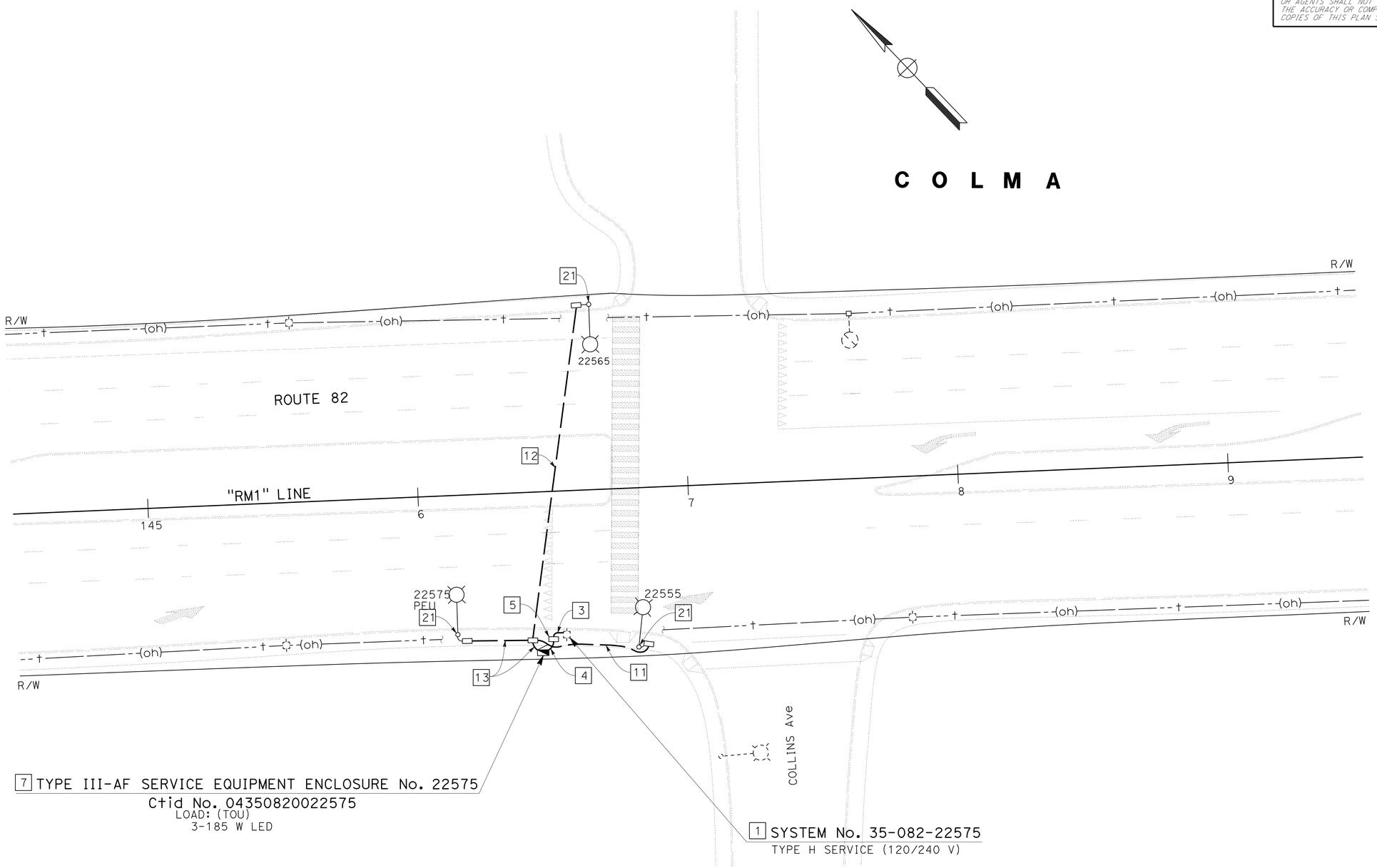

LIGHTING
LOCATION No. 8
SCALE: 1" = 20'

APPROVED FOR ELECTRICAL WORK ONLY

FOR NOTES, ABBREVIATION AND LEGEND, SEE SHEET E-1

E-10

STATE OF CALIFORNIA - DEPARTMENT OF TRANSPORTATION
Caltrans
ELECTRICAL

FUNCTIONAL SUPERVISOR: BEHZAD GOLEMOHAMMADI
CALCULATED-DESIGNED BY: JESSIE CABUGAO
CHECKED BY: ELAINE WONG
REVISED BY: EW
DATE REVISED: 1-27-16

LAST REVISION 01-13-16 | DATE PLOTTED => 07-MAR-2016 | TIME PLOTTED => 13:00

Dist	COUNTY	ROUTE	POST MILES TOTAL PROJECT	SHEET No.	TOTAL SHEETS
04	SM	82,84	1.4/25.1, 23.1/24.1	129	196

Elaine Wong 1-28-16
REGISTERED ELECTRICAL ENGINEER DATE

2-16-16
PLANS APPROVAL DATE

REGISTERED PROFESSIONAL ENGINEER Elaine T. Wong No. 13753 Exp. 6-30-17 ELECTRICAL STATE OF CALIFORNIA

THE STATE OF CALIFORNIA OR ITS OFFICERS OR AGENTS SHALL NOT BE RESPONSIBLE FOR THE ACCURACY OR COMPLETENESS OF SCANNED COPIES OF THIS PLAN SHEET.

NOTE:
FOR ACCURATE RIGHT OF WAY DATA, CONTACT RIGHT OF WAY ENGINEERING AT THE DISTRICT OFFICE.

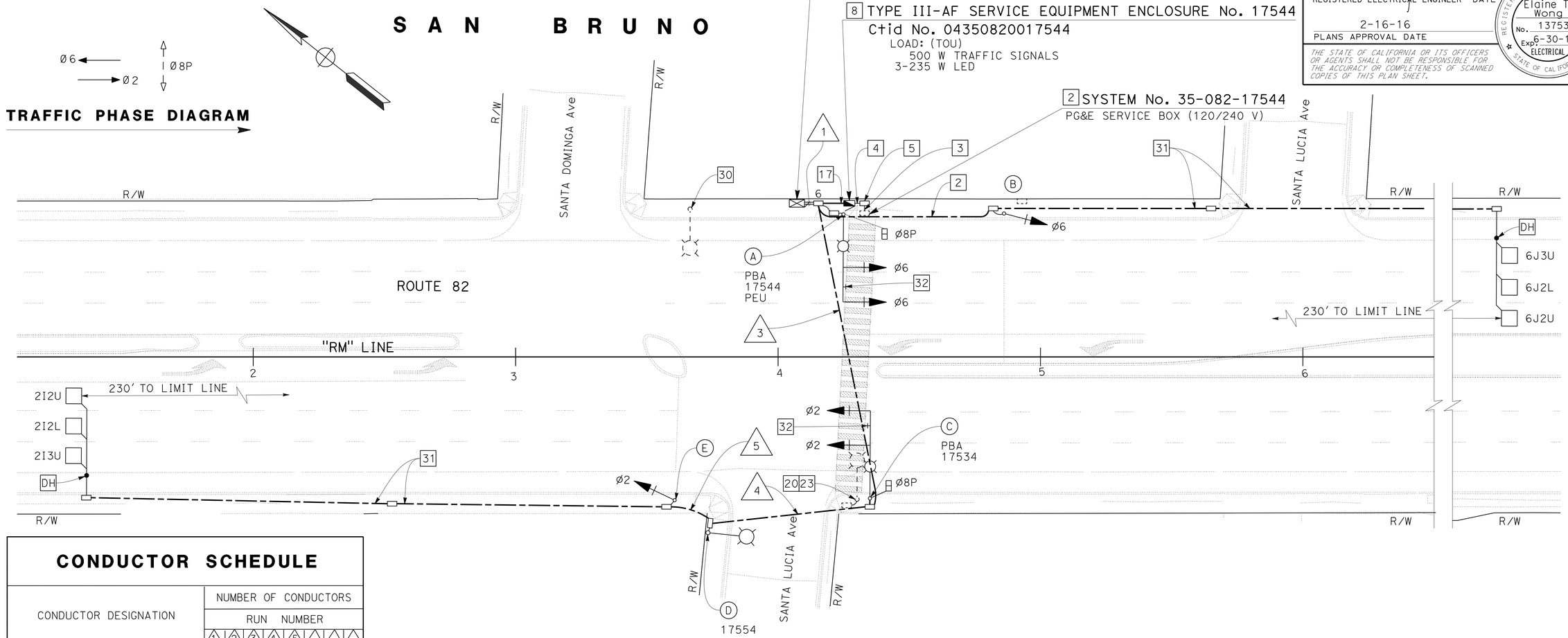

CONDUCTOR SCHEDULE

CONDUCTOR DESIGNATION	NUMBER OF CONDUCTORS RUN NUMBER 1	2	3	4	5			
No. 14 CONDUCTORS								
Ø2	8		8	8	2			
Ø6	8	2						
Ø2P	4		2					
PPBØ8	2		1					
PPB NEUTRAL	2		1					
PHOTO ELECTRIC UNIT (PEU)								
SPARES	6	3	3	3	3			
TOTAL No. 14	30	5	15	5	5			
No. 6 SERVICE TO CONTROLLER	2							
No. 8 CONDUCTORS								
LIGHTING (240 V)			2	2				
SIGNAL NEUTRAL	2	1	1	1	1			
TOTAL No. 8	2	1	3	3	1			
DLC								
2I2L	1		1	1	1			
2I2U	1		1	1	1			
2I3U	1		1	1	1			
6J2U	1	1						
6J2L	1	1						
6J3U	1	1						
TOTAL DLC	6	3	3	3	3			
CONDUIT SIZE	2-3"	3	3	3	3			

POLE AND EQUIPMENT SCHEDULE

LOCATION	STANDARD TYPE	SMA	LMA	VEHICLE SIGNAL MOUNTING MAST ARM	POLE	PED SIGNAL MOUNTING	PBA Ø	LED LUMINAIRE (WATTS)	SPECIAL REQUIREMENT *	
A	24A-4-100	35	15	MAS MAS		SP-1-T	8	235	29 APS WITH LED PEDESTRIAN SIGNAL COUNTDOWN	F=15'
B	1-B				TV-1-T				9	
C	24A-4-100	35	15	MAS MAS		SP-1-T	8	235	29 APS WITH LED PEDESTRIAN SIGNAL COUNTDOWN	F=15'
D	15		15					235		
E	1-B				TV-1-T				9	

* OTHER REQUIREMENTS ARE COVERED BY NOTES, LEGEND, SPECIAL PROVISIONS AND STANDARD SPECIFICATIONS. FOR TYPE OF STANDARD, VEHICLE AND PEDESTRIAN SIGNAL MOUNTING, SEE STANDARD PLANS.

APPROVED FOR ELECTRICAL WORK ONLY

FOR NOTES, ABBREVIATION AND LEGEND, SEE SHEET E-1

SIGNAL AND LIGHTING
LOCATION No. 9
SCALE: 1" = 20'

E-11

REVISED BY	DATE REVISED
EW	1-27-16

JESSIE CABUGAO — ELAINE WONG
CALCULATED-DESIGNED BY — CHECKED BY
FUNCTIONAL SUPERVISOR: BEHZAD GOLEMOHAMMADI

STATE OF CALIFORNIA - DEPARTMENT OF TRANSPORTATION
Caltrans
ELECTRICAL

LAST REVISION 01-13-16 | DATE PLOTTED => 07-MAR-2016 | TIME PLOTTED => 13:00

Dist	COUNTY	ROUTE	POST MILES TOTAL PROJECT	SHEET No.	TOTAL SHEETS
04	SM	82,84	1.4/25.1, 23.1/24.1	130	196

Elaine Wong 1-28-16
REGISTERED ELECTRICAL ENGINEER DATE

2-16-16
PLANS APPROVAL DATE

REGISTERED PROFESSIONAL ENGINEER Elaine T. Wong No. 13753 Exp. 6-30-17 ELECTRICAL STATE OF CALIFORNIA

THE STATE OF CALIFORNIA OR ITS OFFICERS OR AGENTS SHALL NOT BE RESPONSIBLE FOR THE ACCURACY OR COMPLETENESS OF SCANNED COPIES OF THIS PLAN SHEET.

NOTE:

FOR ACCURATE RIGHT OF WAY DATA, CONTACT RIGHT OF WAY ENGINEERING AT THE DISTRICT OFFICE.

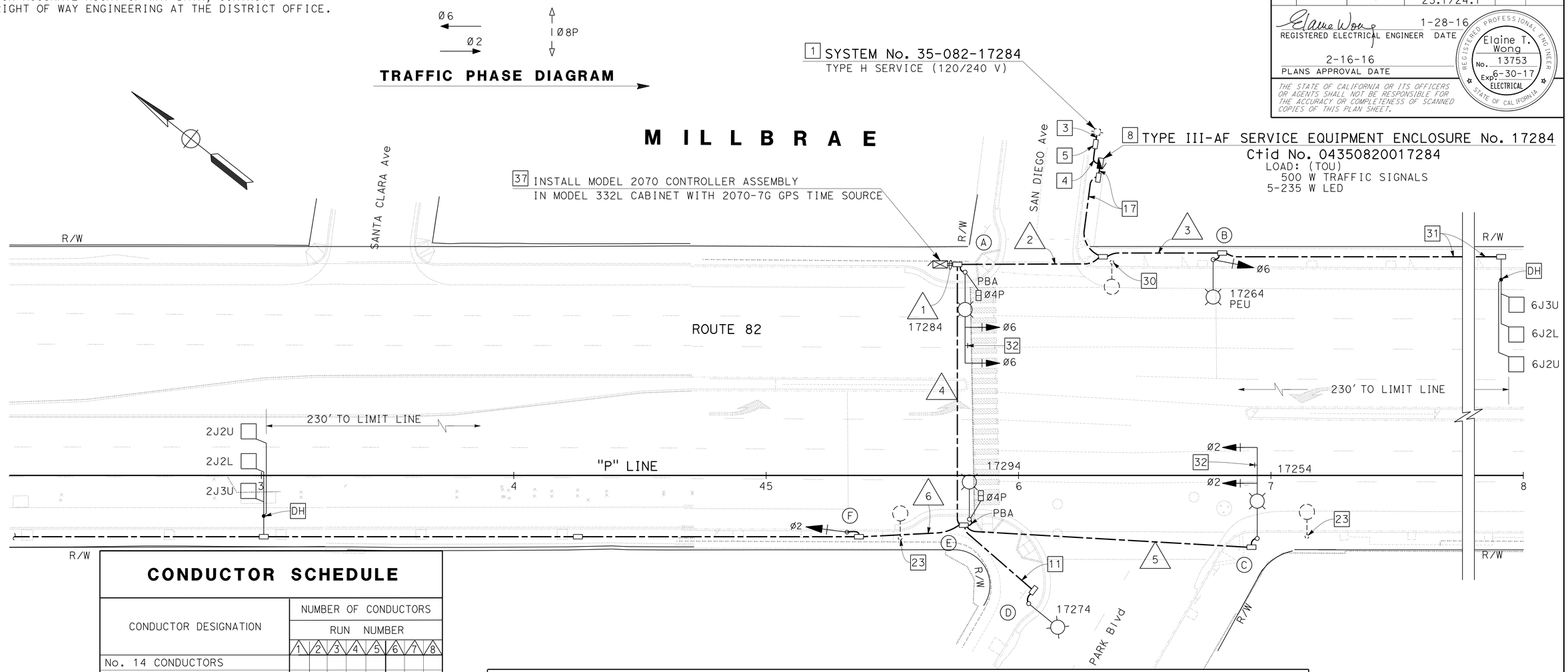

CONDUCTOR SCHEDULE

CONDUCTOR DESIGNATION	NUMBER OF CONDUCTORS RUN NUMBER 1	2	3	4	5	6	7	8
No. 14 CONDUCTORS								
Ø2	8			8	6	2		
Ø6	8	2	2					
Ø4P	4			2				
PPBØ4	2			1				
PPB NEUTRAL	2			1				
PHOTO ELECTRIC UNIT (PEU)			3					
SPARES	6	3	3	3	3			
TOTAL No. 14	30	5	8	15	9	2		
No. 6 SERVICE TO CONTROLLER	2							
No. 8 CONDUCTORS								
LIGHTING (240 V)		2	2	2	2			
SIGNAL NEUTRAL	2	1	1	1	1	1		
TOTAL No. 8	2	3	3	3	3	1		
DLC								
2I2U	1			1		1		
2I2L	1			1		1		
2I3U	1			1		1		
6J2U	1	1	1					
6J2L	1	1	1					
6J3U	1	1	1					
TOTAL DLC	6	3	3	3		3		
CONDUIT SIZE (INCHES)	2-3	3	3	3	3	3		

POLE AND EQUIPMENT SCHEDULE

LOCATION	STANDARD TYPE	SMA	LMA	VEHICLE SIGNAL MOUNTING MAST ARM	POLE	PED SIGNAL MOUNTING	PBA Ø	LED LUMINAIRE (WATTS)	SPECIAL REQUIREMENT
A	24A-4-100	35	15	MAS MAS		SP-1-T	← 4	235	APS WITH LED PEDESTRIAN SIGNAL COUNTDOWN F=15' [29]
B	15TS				SV-1-T			235	[9]
C	24A-4-100	35	15	MAS MAS				235	F=15' [29]
D	15		15					235	
E	15TS		15			SP-1-T	→ 4	235	APS WITH LED PEDESTRIAN SIGNAL COUNTDOWN
F	1-B				TV-1-T				[9]

APPROVED FOR ELECTRICAL WORK ONLY

FOR NOTES, ABBREVIATION AND LEGEND, SEE SHEET E-1

SIGNAL AND LIGHTING
LOCATION No. 10
SCALE: 1" = 20'

E-12

REVISED BY	DATE REVISED
EW	1-27-16

JESSIE CABUGAO — CALCULATED-DESIGNED BY
ELAINE WONG — CHECKED BY
BEHZAD GOLEMOHAMMADI — FUNCTIONAL SUPERVISOR

STATE OF CALIFORNIA - DEPARTMENT OF TRANSPORTATION
ELECTRICAL
Caltrans

LAST REVISION 08-25-15 | DATE PLOTTED => 07-MAR-2016 | TIME PLOTTED => 13:00

NOTE:

FOR ACCURATE RIGHT OF WAY DATA, CONTACT RIGHT OF WAY ENGINEERING AT THE DISTRICT OFFICE.

Dist	COUNTY	ROUTE	POST MILES TOTAL PROJECT	SHEET No.	TOTAL SHEETS
04	SM	82,84	1.4/25.1, 23.1/24.1	131	196

Elaine Wong 1-28-16
REGISTERED ELECTRICAL ENGINEER DATE

2-16-16
PLANS APPROVAL DATE

REGISTERED PROFESSIONAL ENGINEER Elaine T. Wong No. 13753 Exp. 6-30-17 ELECTRICAL STATE OF CALIFORNIA

THE STATE OF CALIFORNIA OR ITS OFFICERS OR AGENTS SHALL NOT BE RESPONSIBLE FOR THE ACCURACY OR COMPLETENESS OF SCANNED COPIES OF THIS PLAN SHEET.

M I L L B R A E

TRAFFIC PHASE DIAGRAM

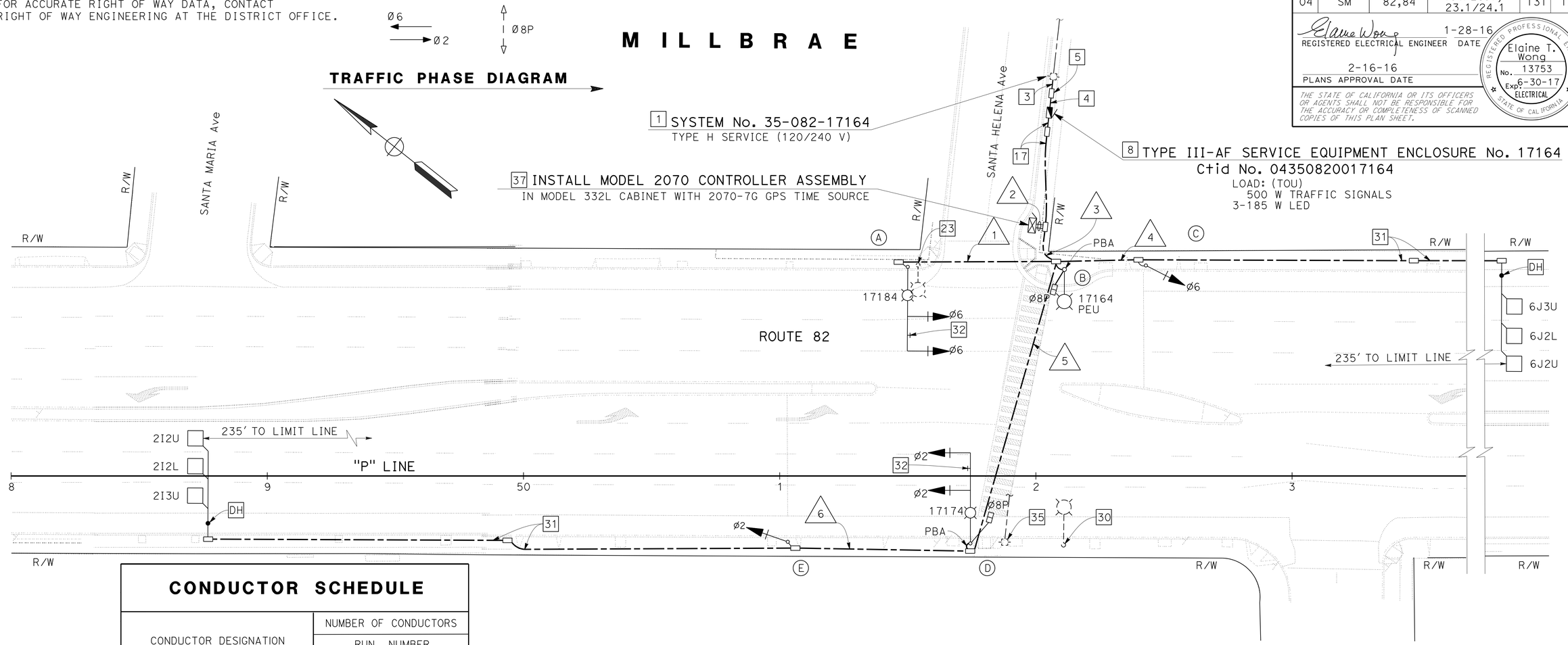

CONDUCTOR SCHEDULE

CONDUCTOR DESIGNATION	NUMBER OF CONDUCTORS RUN NUMBER 1	2	3	4	5	6		
No. 14 CONDUCTORS								
Ø2		8	8		8	2		
Ø6	6	8	8	2				
Ø8P		4	4		2			
PPBØ8		2	2		1			
PPB NEUTRAL		2	2		1			
PHOTO ELECTRIC UNIT (PEU)			3					
SPARES	3	6	6		3	3		
TOTAL No. 14	9	30	32		15	5		
No. 6 SERVICE TO CONTROLLER		2						
No. 8 CONDUCTORS								
LIGHTING (240 V)	2	2	2		2			
SIGNAL NEUTRAL	1	2	2	1	1	1		
TOTAL No. 8	3	4	4	1	3	1		
DLC								
2I2L		1	1		1	1		
2I2U		1	1		1	1		
2I3U		1	1		1	1		
6J2U		1	1	1				
6J2L		1	1	1				
6J2U		1	1	1				
TOTAL DLC		6	6	3	3	3		
CONDUIT SIZE	3	2-3	2-3	3	3	3		

POLE AND EQUIPMENT SCHEDULE

LOCATION	STANDARD TYPE	SMA	LMA	VEHICLE SIGNAL MOUNTING MAST ARM	POLE	PED SIGNAL MOUNTING	PBA ø	LED LUMINAIRE (WATTS)	SPECIAL REQUIREMENT
A	(Mod) 24-4-100	35	15	MAS MAS				235	F=15' 29 22
B	(Mod) 15TS		15			SP-1-T	→8	235	APS WITH LED PEDESTRIAN SIGNAL COUNTDOWN 22
C	1-B				TV-1-T				9
D	(Mod) 24-4-100	35	15	MAS MAS		SP-1-T	→8	235	APS WITH LED PEDESTRIAN SIGNAL COUNTDOWN F=15' 29 22
E	1-B				TV-1-T				9

APPROVED FOR ELECTRICAL WORK ONLY

FOR NOTES, ABBREVIATION AND LEGEND, SEE SHEET E-1

SIGNAL AND LIGHTING
LOCATION No. 11
SCALE: 1" = 20'

E-13

STATE OF CALIFORNIA - DEPARTMENT OF TRANSPORTATION
Caltrans®
ELECTRICAL

FUNCTIONAL SUPERVISOR: BEHZAD GOLEMOHAMMADI
CALCULATED-DESIGNED BY: JESSIE CABUGAO
CHECKED BY: ELAINE WONG
REVISED BY: EW
DATE REVISED: 1-27-16

LAST REVISION 01-13-16 | DATE PLOTTED => 07-MAR-2016 | TIME PLOTTED => 13:00

Dist	COUNTY	ROUTE	POST MILES TOTAL PROJECT	SHEET No.	TOTAL SHEETS
04	SM	82,84	1.4/25.1, 23.1/24.1	132	196

Elaine Wong 1-28-16
REGISTERED ELECTRICAL ENGINEER DATE

2-16-16
PLANS APPROVAL DATE

REGISTERED PROFESSIONAL ENGINEER Elaine T. Wong No. 13753 Exp. 6-30-17 ELECTRICAL STATE OF CALIFORNIA

THE STATE OF CALIFORNIA OR ITS OFFICERS OR AGENTS SHALL NOT BE RESPONSIBLE FOR THE ACCURACY OR COMPLETENESS OF SCANNED COPIES OF THIS PLAN SHEET.

NOTE:

FOR ACCURATE RIGHT OF WAY DATA, CONTACT RIGHT OF WAY ENGINEERING AT THE DISTRICT OFFICE.

POLE AND EQUIPMENT SCHEDULE

LOCATION	STANDARD TYPE	STANDARD SMA	STANDARD LMA	VEHICLE SIGNAL MOUNTING MAST ARM	VEHICLE SIGNAL MOUNTING POLE	PED SIGNAL MOUNTING	PBA ø	LED LUMINAIRE (WATTS)	SPECIAL REQUIREMENT
A	(Mod) 24-4-100	35	15	MAS MAS		SP-1-T	→ 4	185	APS WITH LED PEDESTRIAN SIGNAL COUNTDOWN F=15′ [29] [22]
B	1-B				TV-1-T				[9]
C	(Mod) 24-4-100	35	15	MAS MAS				185	F=15′ [29] [22]
D	(Mod) 15		15					185	[22]
E	(Mod) 15TS		15			SP-1-T	→ 4	185	APS WITH LED PEDESTRIAN SIGNAL COUNTDOWN [22]
F	1-B				TV-1-T				[9]

CONDUCTOR SCHEDULE

CONDUCTOR DESIGNATION	NUMBER OF CONDUCTORS RUN NUMBER 1	2	3	4	5	6		
No. 14 CONDUCTORS								
ø2			8	8	2	2		
ø6	6	8	8					
ø4P	2	2	4	2	2			
PPBø4	1	1	2	1	1			
PPB NEUTRAL	1	1	2	1	1			
PHOTO ELECTRIC UNIT (PEU)								
SPARES	3	3	6	3	3	3		
TOTAL No. 14	13	15	30	15	9	5		
No. 6 SERVICE TO CONTROLLER			2					
No. 8 CONDUCTORS								
LIGHTING (240 V)	2	2		2	2			
SIGNAL NEUTRAL	1	1	2	1	1	1		
TOTAL No. 8	3	3	2	3	3	1		
DLC								
2I2U			1	1	1	1		
2I2L			1	1	1	1		
2I3U			1	1	1	1		
6J2U		1	1					
6J2L		1	1					
6J3U		1	1					
TOTAL DLC		3	6	3	3	3		
CONDUIT SIZE	3	3	2-3	3	3	3		

M I L L B R A E

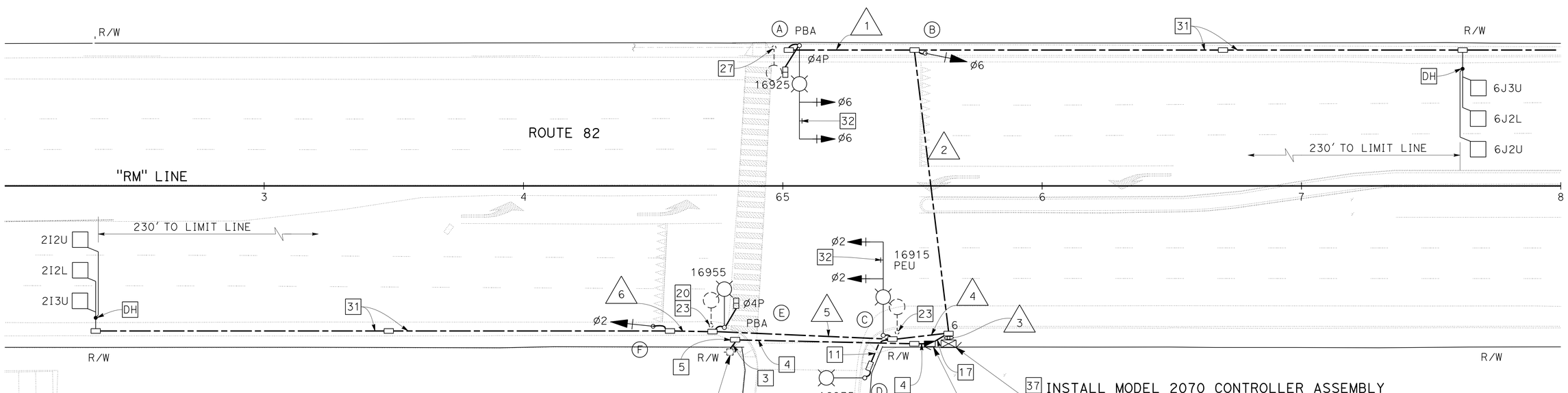

TRAFFIC PHASE DIAGRAM

SIGNAL AND LIGHTING
LOCATION No. 12
SCALE: 1" = 20′

APPROVED FOR ELECTRICAL WORK ONLY

FOR NOTES, ABBREVIATION AND LEGEND, SEE SHEET E-1

E-14

REVISED BY	EW	DATE REVISED	1-27-16
CALCULATED-DESIGNED BY	JESSIE CABUGAO	CHECKED BY	ELAINE WONG
FUNCTIONAL SUPERVISOR	BEHZAD GOLEMOHAMMADI		

STATE OF CALIFORNIA - DEPARTMENT OF TRANSPORTATION
Caltrans
ELECTRICAL

LAST REVISION 01-13-16 | DATE PLOTTED => 07-MAR-2016 | TIME PLOTTED => 13:00

Dist	COUNTY	ROUTE	POST MILES TOTAL PROJECT	SHEET No.	TOTAL SHEETS
04	SM	82,84	1.4/25.1, 23.1/24.1	133	196

Elaine Wong 1-28-16
REGISTERED ELECTRICAL ENGINEER DATE

2-16-16
PLANS APPROVAL DATE

REGISTERED PROFESSIONAL ENGINEER Elaine T. Wong No. 13753 Exp. 6-30-17 ELECTRICAL STATE OF CALIFORNIA

THE STATE OF CALIFORNIA OR ITS OFFICERS OR AGENTS SHALL NOT BE RESPONSIBLE FOR THE ACCURACY OR COMPLETENESS OF SCANNED COPIES OF THIS PLAN SHEET.

NOTE:

FOR ACCURATE RIGHT OF WAY DATA, CONTACT RIGHT OF WAY ENGINEERING AT THE DISTRICT OFFICE.

MILLBRAE TRAFFIC PHASE DIAGRAM

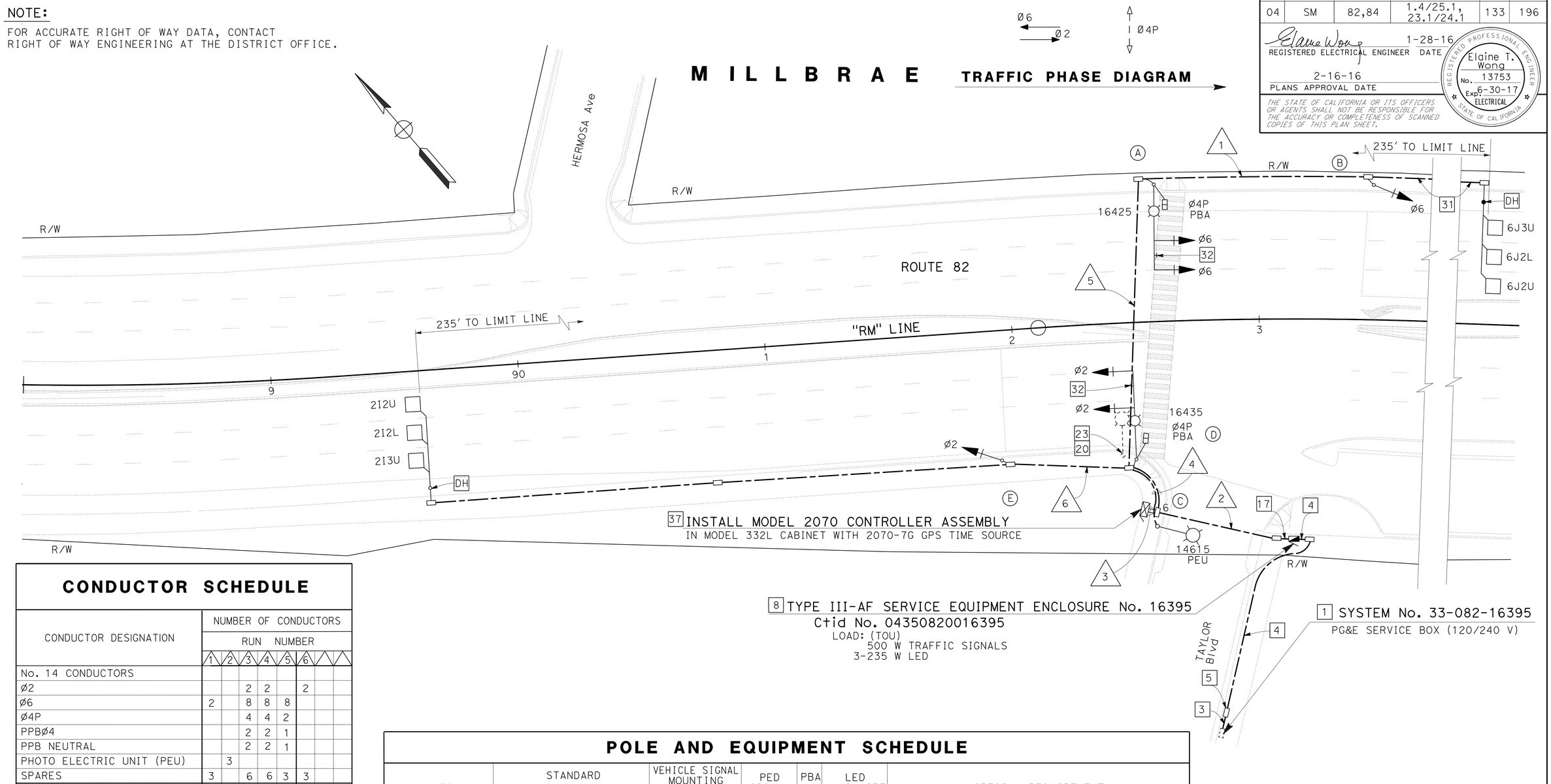

CONDUCTOR SCHEDULE

CONDUCTOR DESIGNATION	NUMBER OF CONDUCTORS RUN NUMBER 1	2	3	4	5	6		
No. 14 CONDUCTORS								
Ø2			2	2		2		
Ø6	2		8	8	8			
Ø4P			4	4	2			
PPBØ4			2	2	1			
PPB NEUTRAL			2	2	1			
PHOTO ELECTRIC UNIT (PEU)		3						
SPARES	3		6	6	3	3		
TOTAL No. 14	5		24	24	15	5		
2#6 (SERVICE TO CONTROLLER)		2						
No. 8 CONDUCTORS								
LIGHTING (240 V)		2		2	2			
SIGNAL NEUTRAL	1		2	2	1	1		
TOTAL No. 8	1	2	2	4	3	1		
DLC								
2I2U			1	1		1		
2I2L			1	1		1		
2I3U			1	1		1		
6J2U	1		1	1	1			
6J3U	1		1	1	1			
6J3L	1		1	1	1			
TOTAL DLC	3		6	6	3	3		
CONDUIT SIZE	3	3	2-3"	2-3"	3	3		

POLE AND EQUIPMENT SCHEDULE

LOCATION	STANDARD TYPE	SMA	LMA	VEHICLE SIGNAL MOUNTING MAST ARM	POLE	PED SIGNAL MOUNTING	PBA Ø	LED LUMINAIRE (WATTS)	SPECIAL REQUIREMENT
A	24A-4-100	35	15	MAS MAS		SV-1-T	←4	235	APS WITH LED COUNTDOWN PEDESTRIAN SIGNAL F=15' 29
B	1-B				TV-1-T				9
C	15		15					235	
D	24A-4-100	35	15	MAS MAS		SV-1-T	←4	235	APS WITH LED COUNTDOWN PEDESTRIAN SIGNAL F=15' 29
E	1-B				TV-1-T				9

APPROVED FOR ELECTRICAL WORK ONLY

FOR NOTES, ABBREVIATION AND LEGEND, SEE SHEET E-1

SIGNAL AND LIGHTING
LOCATION No. 13
SCALE: 1" = 20'

E-15

STATE OF CALIFORNIA - DEPARTMENT OF TRANSPORTATION
Caltrans
ELECTRICAL

FUNCTIONAL SUPERVISOR: BEHZAD GOLEMOHAMMADI
CALCULATED-DESIGNED BY: JESSIE CABUGAO
CHECKED BY: ELAINE WONG
REVISED BY: EW
DATE REVISED: 1-27-16

LAST REVISION 01-12-16 | DATE PLOTTED => 07-MAR-2016 | TIME PLOTTED => 13:00

Dist	COUNTY	ROUTE	POST MILES TOTAL PROJECT	SHEET No.	TOTAL SHEETS
04	SM	82,84	1.4/25.1, 23.1/24.1	134	196

Elaine Wong 1-28-16
REGISTERED ELECTRICAL ENGINEER DATE

2-16-16
PLANS APPROVAL DATE

REGISTERED PROFESSIONAL ENGINEER Elaine T. Wong No. 13753 Exp. 6-30-17 ELECTRICAL STATE OF CALIFORNIA

THE STATE OF CALIFORNIA OR ITS OFFICERS OR AGENTS SHALL NOT BE RESPONSIBLE FOR THE ACCURACY OR COMPLETENESS OF SCANNED COPIES OF THIS PLAN SHEET.

NOTE:

FOR ACCURATE RIGHT OF WAY DATA, CONTACT RIGHT OF WAY ENGINEERING AT THE DISTRICT OFFICE.

Ø6 Ø2 Ø4P

TRAFFIC PHASE DIAGRAM

M I L L B R A E

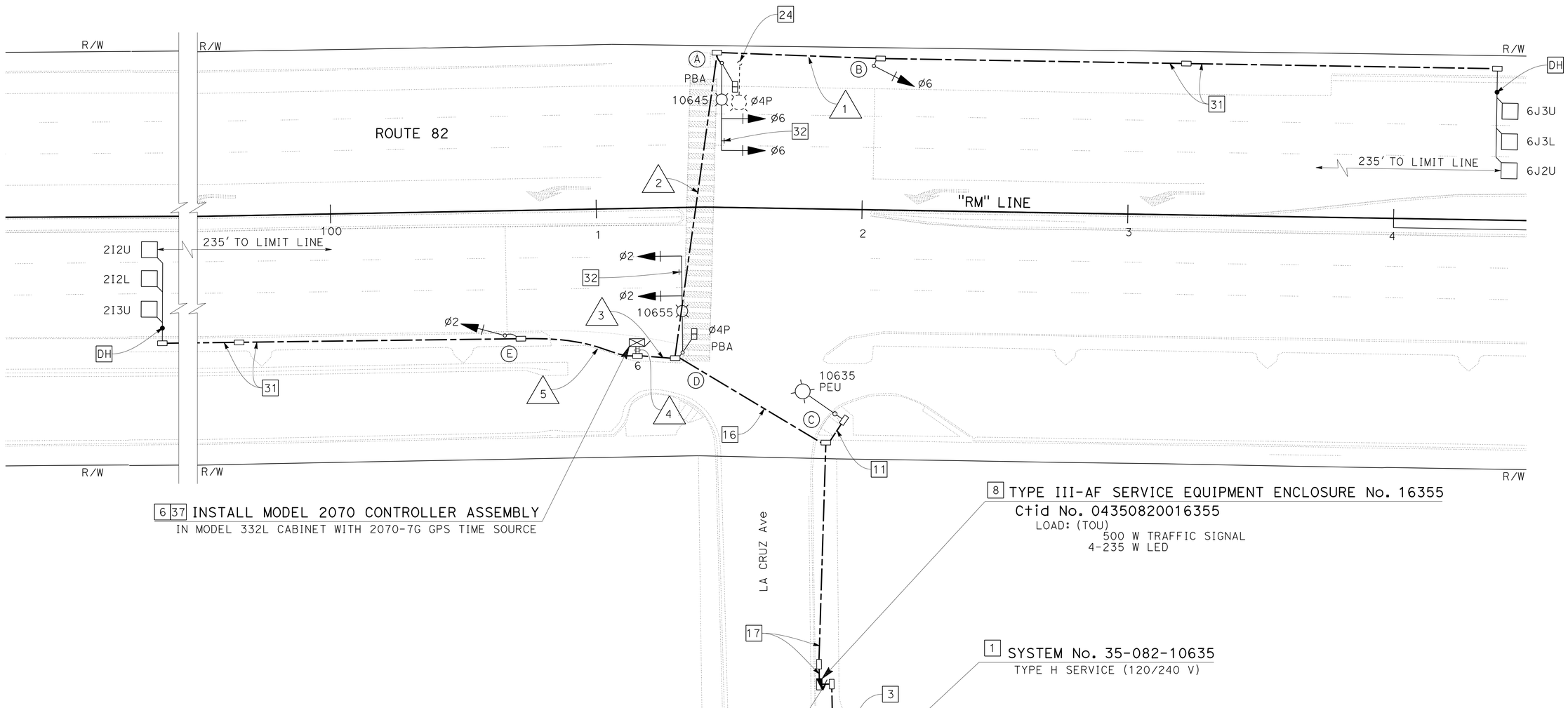

6 37 INSTALL MODEL 2070 CONTROLLER ASSEMBLY
IN MODEL 332L CABINET WITH 2070-7G GPS TIME SOURCE

8 TYPE III-AF SERVICE EQUIPMENT ENCLOSURE No. 16355
Ctid No. 04350820016355
LOAD: (TOU)
500 W TRAFFIC SIGNAL
4-235 W LED

1 SYSTEM No. 35-082-10635
TYPE H SERVICE (120/240 V)

APPROVED FOR ELECTRICAL WORK ONLY

FOR NOTES, ABBREVIATION AND LEGEND, SEE SHEET E-1

SIGNAL AND LIGHTING
LOCATION No. 14
SCALE: 1" = 20'

E-16

REVISED BY	DATE REVISED
EW	1-27-16

CALCULATED-DESIGNED BY: JESSIE CABUGAO
CHECKED BY: ELAINE WONG
FUNCTIONAL SUPERVISOR: BEHZAD GOLEMOHAMMADI

STATE OF CALIFORNIA - DEPARTMENT OF TRANSPORTATION
Caltrans
ELECTRICAL

LAST REVISION 01-12-16 | DATE PLOTTED => 07-MAR-2016 TIME PLOTTED => 13:00

Dist	COUNTY	ROUTE	POST MILES TOTAL PROJECT	SHEET No.	TOTAL SHEETS
04	SM	82,84	1.4/25.1, 23.1/24.1	135	196

Elaine Wong 1-28-16
REGISTERED ELECTRICAL ENGINEER DATE

2-16-16
PLANS APPROVAL DATE

REGISTERED PROFESSIONAL ENGINEER Elaine T. Wong No. 13753 Exp. 6-30-17 ELECTRICAL STATE OF CALIFORNIA

THE STATE OF CALIFORNIA OR ITS OFFICERS OR AGENTS SHALL NOT BE RESPONSIBLE FOR THE ACCURACY OR COMPLETENESS OF SCANNED COPIES OF THIS PLAN SHEET.

CONDUCTOR SCHEDULE

CONDUCTOR DESIGNATION	NUMBER OF CONDUCTORS RUN NUMBER 1	2	3	4	5	6	7	8
No. 14 CONDUCTORS								
ø2			6	8	2			
ø6	2	8	8	8				
ø4P		2	4	4				
PPBø4		1	2	2				
PPB NEUTRAL		1	2	2				
PHOTO ELECTRICAL UNIT (PEU)								
SPARES	3	3	3	6	3			
TOTAL No. 14	5	15	25	30	5			
No. 6 (SERVICE TO CONTROLLER)								
No. 8 CONDUCTORS								
LIGHTING (240 V)			2	2				
SIGNAL NEUTRAL	1	1	1	2	1			
TOTAL No. 8	1	3	3	2	1			
DLC								
2I2U				1	1			
2I2L				1	1			
2I3U				1	1			
6J2U	1	1	1	1				
6J2L	1	1	1	1				
6J3U	1	1	1	1				
TOTAL DLC	3	3	3	6	3			
CONDUIT SIZE (INCHES)	3	3	3	2-3"	3			

POLE AND EQUIPMENT SCHEDULE

LOCATION	STANDARD TYPE	SMA	LMA	VEHICLE SIGNAL MOUNTING MAST ARM	POLE	PED SIGNAL MOUNTING	PBA ø		SPECIAL REQUIREMENT *
A	24A-4-100	35	15	MAS MAS		SP-1-T	← 4	235	APS WITH LED COUNTDOWN PEDESTRIAN SIGNAL F=15′ 29
B	1-B				TV-1-T				9
C	15		15					235	
D	24A-4-100	35	15	MAS MAS		SP-1-T	← 4	235	APS WITH LED COUNTDOWN PEDESTRIAN SIGNAL F=15′ 29
E	1-B				TV-1-T				9

* OTHER REQUIREMENT ARE COVERED BY NOTES, LEGEND, SPECIAL PROVISIONS, AND STANDARD SPECIFICATIONS. FOR TYPE OF STANDARD, VEHICLE AND PEDESTRIAN SIGNAL MOUNTING, SEE STANDARD PLANS.

SIGNAL AND LIGHTING
LOCATION No. 14

E-17

STATE OF CALIFORNIA - DEPARTMENT OF TRANSPORTATION
Caltrans ELECTRICAL

FUNCTIONAL SUPERVISOR: BEHZAD GOLEMOHAMMADI
CALCULATED-DESIGNED BY: JESSIE CABUGAO
CHECKED BY: ELAINE WONG
REVISED BY: EW
DATE REVISED: 1-27-16

LAST REVISION 01-12-16 | DATE PLOTTED => 07-MAR-2016 | TIME PLOTTED => 13:00

NOTE:

FOR ACCURATE RIGHT OF WAY DATA, CONTACT
RIGHT OF WAY ENGINEERING AT THE DISTRICT OFFICE.

Dist	COUNTY	ROUTE	POST MILES TOTAL PROJECT	SHEET No.	TOTAL SHEETS
04	SM	82,84	1.4/25.1, 23.1/24.1	136	196

Elaine Wong 1-28-16
REGISTERED ELECTRICAL ENGINEER DATE

2-16-16
PLANS APPROVAL DATE

REGISTERED PROFESSIONAL ENGINEER Elaine T. Wong No. 13753 Exp. 6-30-17 ELECTRICAL STATE OF CALIFORNIA

THE STATE OF CALIFORNIA OR ITS OFFICERS OR AGENTS SHALL NOT BE RESPONSIBLE FOR THE ACCURACY OR COMPLETENESS OF SCANNED COPIES OF THIS PLAN SHEET.

Ø2 ← ; → Ø2 ; ↑ ↓ Ø8P

TRAFFIC PHASE DIAGRAM

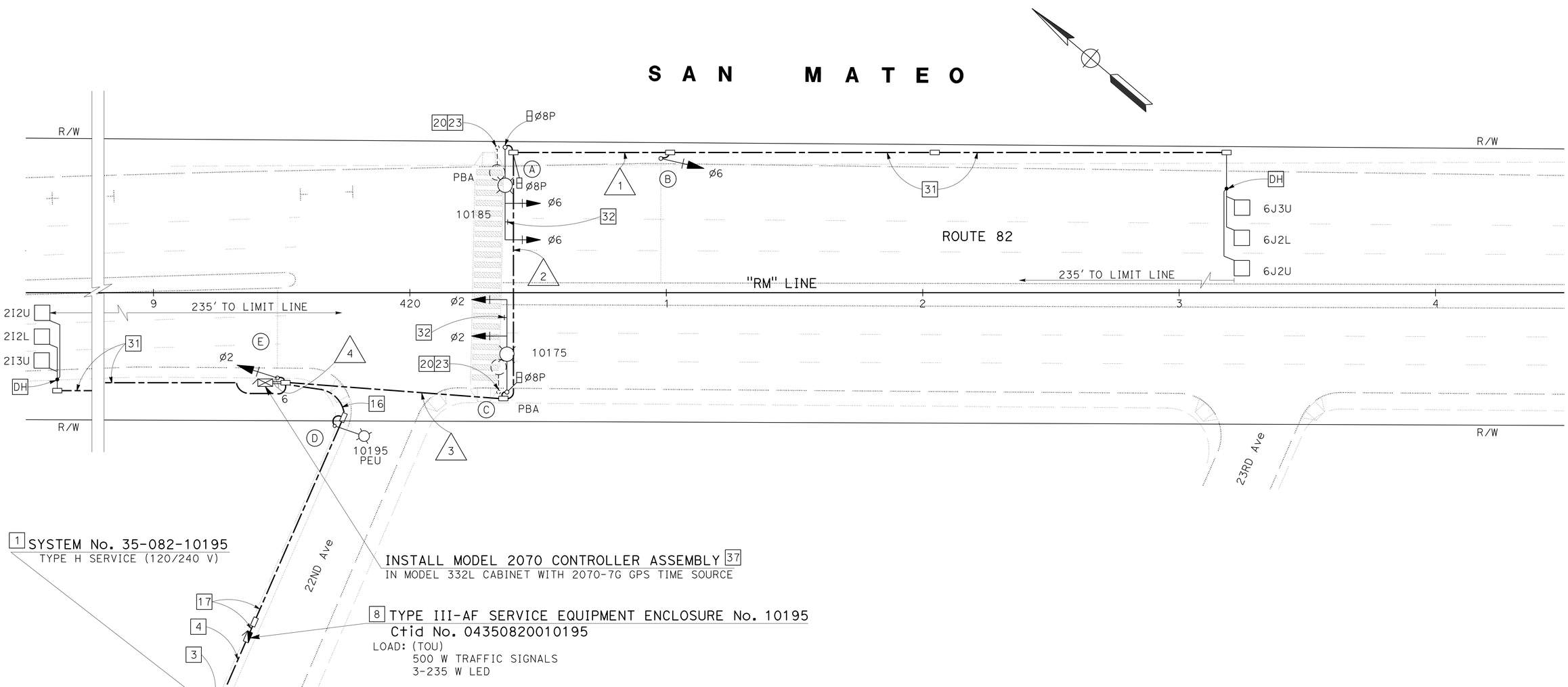

APPROVED FOR ELECTRICAL WORK ONLY

FOR NOTES, ABBREVIATION AND LEGEND, SEE SHEET E-1

SIGNAL AND LIGHTING
LOCATION No. 18
SCALE: 1" = 20'

E-18

STATE OF CALIFORNIA - DEPARTMENT OF TRANSPORTATION
Caltrans®
ELECTRICAL

FUNCTIONAL SUPERVISOR: BEHZAD GOLEMOHAMMADI
CALCULATED-DESIGNED BY: JESSIE CABUGAO
CHECKED BY: ELAINE WONG
REVISED BY: EW
DATE REVISED: 1-27-16

LAST REVISION 01-12-16 | DATE PLOTTED => 07-MAR-2016 | TIME PLOTTED => 13:00

BORDER LAST REVISED 7/2/2010 | USERNAME => s127688 | DGN FILE => 0415000086ua018.dgn | RELATIVE BORDER SCALE IS IN INCHES 0 1 2 3 | UNIT 0698 | PROJECT NUMBER & PHASE 04150000861

Dist	COUNTY	ROUTE	POST MILES TOTAL PROJECT	SHEET No.	TOTAL SHEETS
04	SM	82,84	1.4/25.1, 23.1/24.1	137	196

Elaine Wong 1-28-16
REGISTERED ELECTRICAL ENGINEER DATE

2-16-16
PLANS APPROVAL DATE

REGISTERED PROFESSIONAL ENGINEER
Elaine T. Wong
No. 13753
Exp. 6-30-17
ELECTRICAL
STATE OF CALIFORNIA

THE STATE OF CALIFORNIA OR ITS OFFICERS OR AGENTS SHALL NOT BE RESPONSIBLE FOR THE ACCURACY OR COMPLETENESS OF SCANNED COPIES OF THIS PLAN SHEET.

CONDUCTOR SCHEDULE

CONDUCTOR DESIGNATION	NUMBER OF CONDUCTORS RUN NUMBER 1	2	3	4				
No. 14 CONDUCTORS								
Ø2			6	8				
Ø6	2	8	8	8				
Ø2P			2					
PPBØ8		1	2	2				
PPB NEUTRAL		1	2	2				
PHOTO ELECTRIC UNIT (PEU)								
SPARES	3	3	3	3				
TOTAL No. 14	5	15	25	27				
No. 6 SERVICE TO CONTROLLER				2				
No. 8 CONDUCTORS								
LIGHTING (240 V)		2	2					
SIGNAL NEUTRAL	1	1	2	2				
TOTAL No. 8	1	3	4	2				
DLC								
2I2U				1				
2I2U				1				
2I3U				1				
6J2U	1	1	1	1				
6J2L	1	1	1	1				
6J3U	1	1	1	1				
TOTAL DLC	3	3	3	3				
CONDUIT SIZE	3	3	3	3				

POLE AND EQUIPMENT SCHEDULE

LOCATION	STANDARD TYPE	SMA	LMA	VEHICLE SIGNAL MOUNTING MAST ARM	POLE	PED SIGNAL MOUNTING	PBA Ø	LED LUMINAIRE (WATTS)	SPECIAL REQUIREMENT *
A	24A-4-100	35	15	MAS MAS		SP-1-T	→ 8	235	APS WITH LED PEDESTRIAN SIGNAL COUNTDOWN F=15′ 29
B	1-B				TV-1-T				9
C	24A-4-100	35	15	MAS MAS		SP-1-T	← 8	235	APS WITH LED PEDESTRIAN SIGNAL COUNTDOWN F=15′ 29
D	15		15					235	9
E	1-B				TV-1-T				

* OTHER REQUIREMENTS ARE COVERED BY NOTES, LEGEND, SPECIAL PROVISIONS AND STANDARD SPECIFICATIONS. FOR TYPE OF STANDARD, VEHICLE AND PEDESTRIAN SIGNAL MOUNTING, SEE STANDARD PLANS.

SIGNAL AND LIGHTING
LOCATION No. 18

APPROVED FOR ELECTRICAL WORK ONLY

FOR NOTES, ABBREVIATION AND LEGEND, SEE SHEET E-1

E-19

STATE OF CALIFORNIA - DEPARTMENT OF TRANSPORTATION
Caltrans
ELECTRICAL

FUNCTIONAL SUPERVISOR: BEHZAD GOLEMOHAMMADI
CALCULATED-DESIGNED BY: JESSIE CABUGAO
CHECKED BY: ELAINE WONG
REVISED BY: EW
DATE REVISED: 1-27-16

LAST REVISION 01-12-16 | DATE PLOTTED => 07-MAR-2016 | TIME PLOTTED => 13:00

Dist	COUNTY	ROUTE	POST MILES TOTAL PROJECT	SHEET No.	TOTAL SHEETS
04	SM	82,84	1.4/25.1, 23.1/24.1	138	196

Elaine Wong 1-28-16
REGISTERED ELECTRICAL ENGINEER DATE

2-16-16
PLANS APPROVAL DATE

REGISTERED PROFESSIONAL ENGINEER Elaine T. Wong No. 13753 Exp. 6-30-17 ELECTRICAL STATE OF CALIFORNIA

THE STATE OF CALIFORNIA OR ITS OFFICERS OR AGENTS SHALL NOT BE RESPONSIBLE FOR THE ACCURACY OR COMPLETENESS OF SCANNED COPIES OF THIS PLAN SHEET.

NOTE:

FOR ACCURATE RIGHT OF WAY DATA, CONTACT RIGHT OF WAY ENGINEERING AT THE DISTRICT OFFICE.

CONDUCTOR SCHEDULE

CONDUCTOR DESIGNATION	NUMBER OF CONDUCTORS RUN NUMBER 1	2	3	4				
No. 14 CONDUCTORS								
Ø2			6	8				
Ø6	2	8	8	8				
Ø8P		2	4	4				
PPBØ8		1	2	2				
PPB NEUTRAL		1	2	2				
PHOTO ELECTRIC UNIT (PEU)								
SPARES	3	3	6	6				
TOTAL No. 14	5	15	31	30				
No. 6 SERVICE TO CONTROLLER								
No. 8 CONDUCTORS								
LIGHTING (240 V)		2	2					
SIGNAL NEUTRAL	1	1	2	2				
TOTAL No. 8	1	3	4	2				
DLC								
2I2U				1				
2I2L				1				
2I3U				1				
6J2U	1	1	1	1				
6J2L	1	1	1	1				
6J3U								
TOTAL DLC	2	2	2	5				
CONDUIT SIZE	3	3	3	2-3"				

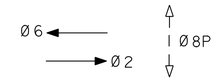

TRAFFIC PHASE DIAGRAM

POLE AND EQUIPMENT SCHEDULE

LOCATION	STANDARD TYPE	SMA	LMA	VEHICLE SIGNAL MOUNTING MAST ARM	POLE	PED SIGNAL MOUNTING	PBA ø	LED LUMINAIRE (WATTS)	SPECIAL REQUIREMENT *
A	(Mod) 24-4-100	35	15	MAS MAS		SP-1-T	8	185	22 29 APS WITH LED PEDESTRIAN SIGNAL COUNTDOWN F=15′
B	1-B				TV-1-T				9
C	(Mod) 24-4-100	35	15	MAS MAS		SP-1-T	8	185	22 29 APS WITH LED PEDESTRIAN SIGNAL COUNTDOWN F=15′
D	(Mod) 15		15					185	22
E	1-B				TV-1-T				9

* OTHER REQUIREMENTS ARE COVERED BY NOTES, LEGEND, SPECIAL PROVISIONS AND STANDARD SPECIFICATIONS. FOR TYPE OF STANDARD, VEHICLE AND PEDESTRIAN SIGNAL MOUNTING, SEE STANDARD PLANS.

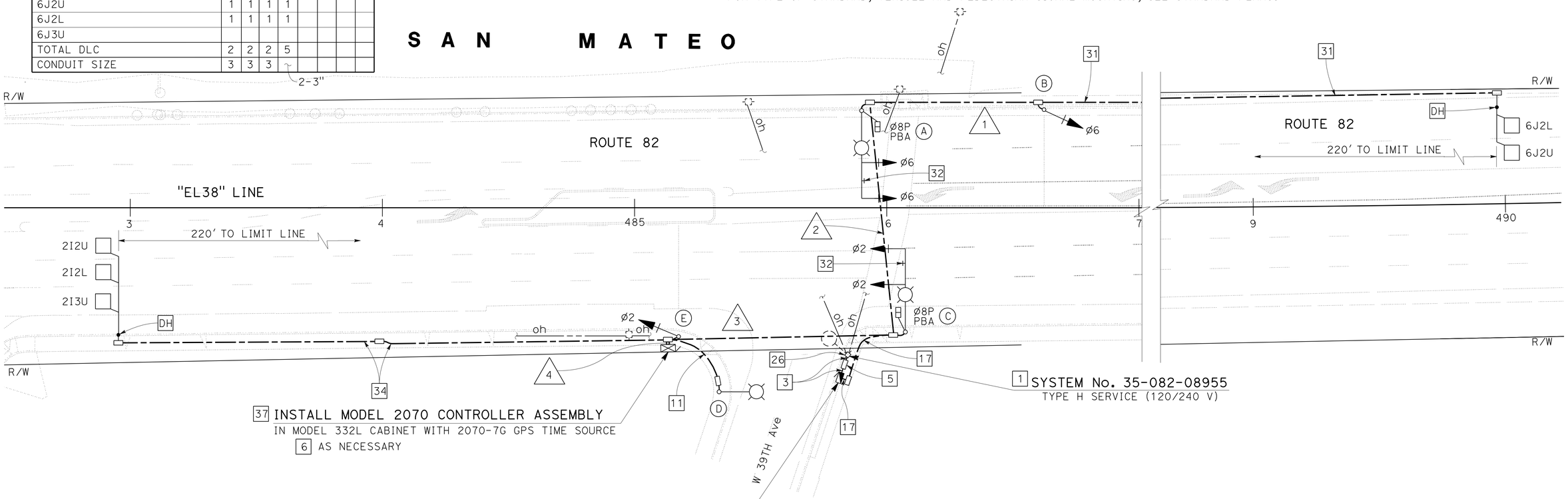

APPROVED FOR ELECTRICAL WORK ONLY

FOR NOTES, ABBREVIATION AND LEGEND, SEE SHEET E-1

SIGNAL AND LIGHTING
LOCATION No. 19
SCALE: 1" = 20′

E-20

EW	1-27-16
REVISED BY	DATE REVISED
JESSIE CABUGAO	ELAINE WONG
CALCULATED-DESIGNED BY	CHECKED BY
FUNCTIONAL SUPERVISOR	BEHZAD GOLEMOHAMMADI

STATE OF CALIFORNIA - DEPARTMENT OF TRANSPORTATION
Caltrans
ELECTRICAL

LAST REVISION 01-12-16 | DATE PLOTTED => 07-MAR-2016 | TIME PLOTTED => 13:00

NOTE:

FOR ACCURATE RIGHT OF WAY DATA, CONTACT
RIGHT OF WAY ENGINEERING AT THE DISTRICT OFFICE.

Dist	COUNTY	ROUTE	POST MILES TOTAL PROJECT	SHEET No.	TOTAL SHEETS
04	SM	82,84	1.4/25.1, 23.1/24.1	139	196

Elaine Wong 1-28-16
REGISTERED ELECTRICAL ENGINEER DATE

2-16-16
PLANS APPROVAL DATE

REGISTERED PROFESSIONAL ENGINEER
Elaine T. Wong
No. 13753
Exp. 6-30-17
ELECTRICAL
STATE OF CALIFORNIA

THE STATE OF CALIFORNIA OR ITS OFFICERS OR AGENTS SHALL NOT BE RESPONSIBLE FOR THE ACCURACY OR COMPLETENESS OF SCANNED COPIES OF THIS PLAN SHEET.

B E L M O N T

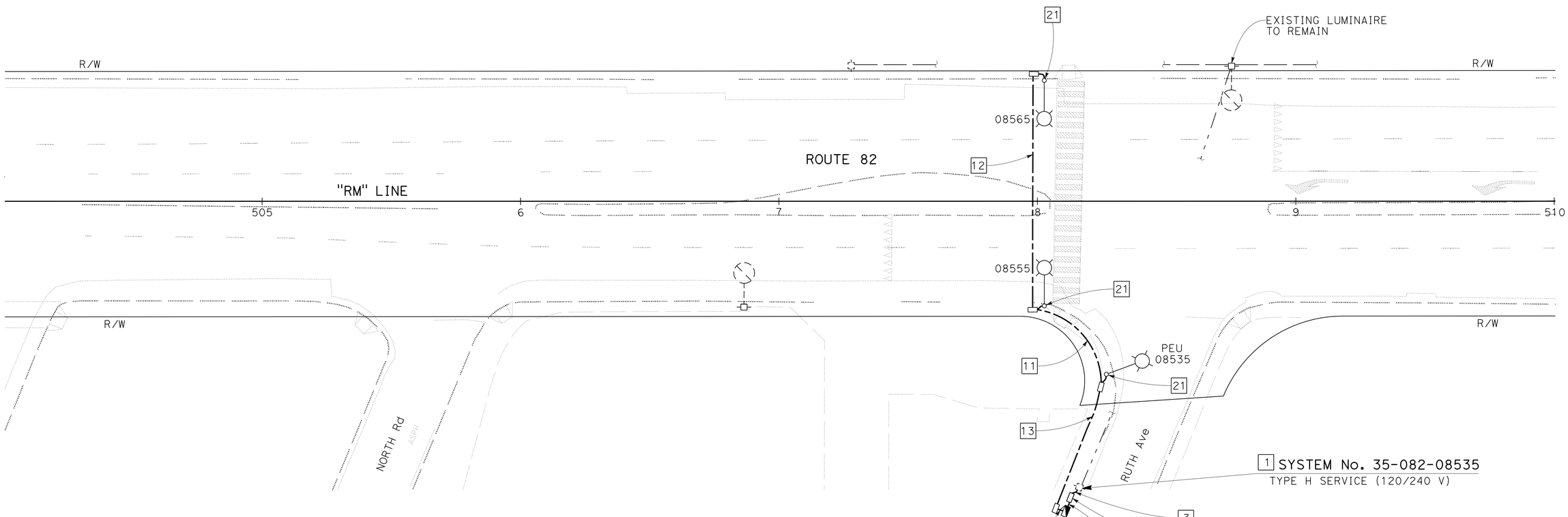

Ctid No. 04350820008535
LOAD: (TOU)
4-185 W LED

LIGHTING
LOCATION No. 20
SCALE: 1" = 20'

APPROVED FOR ELECTRICAL WORK ONLY

FOR NOTES, ABBREVIATION AND LEGEND, SEE SHEET E-1

E-21

REVISED BY	DATE REVISED
EW	1-27-16

CALCULATED-DESIGNED BY: JESSIE CABUGAO
CHECKED BY: ELAINE WONG
FUNCTIONAL SUPERVISOR: BEHZAD GOLEMOHAMMADI

STATE OF CALIFORNIA - DEPARTMENT OF TRANSPORTATION
Caltrans
ELECTRICAL

LAST REVISION 01-12-16
DATE PLOTTED => 07-MAR-2016
TIME PLOTTED => 13:01

NOTE:

FOR ACCURATE RIGHT OF WAY DATA, CONTACT
RIGHT OF WAY ENGINEERING AT THE DISTRICT OFFICE.

Dist	COUNTY	ROUTE	POST MILES TOTAL PROJECT	SHEET No.	TOTAL SHEETS
04	SM	82,84	1.4/25.1, 23.1/24.1	140	196

Elaine Wong 1-28-16
REGISTERED ELECTRICAL ENGINEER DATE

2-16-16
PLANS APPROVAL DATE

REGISTERED PROFESSIONAL ENGINEER Elaine T. Wong No. 13753 Exp. 6-30-17 ELECTRICAL STATE OF CALIFORNIA

THE STATE OF CALIFORNIA OR ITS OFFICERS OR AGENTS SHALL NOT BE RESPONSIBLE FOR THE ACCURACY OR COMPLETENESS OF SCANNED COPIES OF THIS PLAN SHEET.

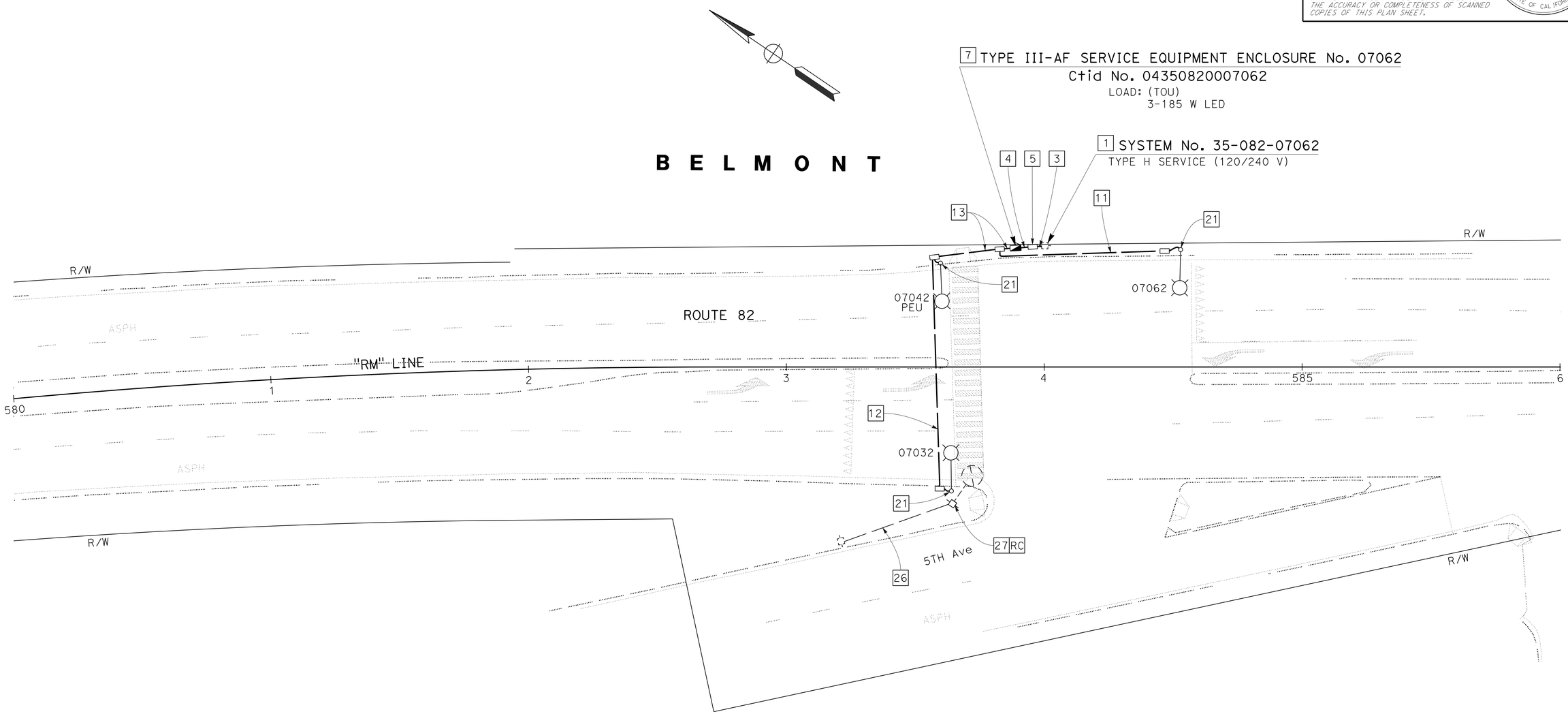

APPROVED FOR ELECTRICAL WORK ONLY

FOR NOTES, ABBREVIATION
AND LEGEND, SEE SHEET E-1

LIGHTING
LOCATION No. 21
SCALE: 1" = 20'

E-22

STATE OF CALIFORNIA - DEPARTMENT OF TRANSPORTATION
Caltrans®
ELECTRICAL

FUNCTIONAL SUPERVISOR: BEHZAD GOLEMOHAMMADI
CALCULATED-DESIGNED BY: JESSIE CABUGAO
CHECKED BY: ELAINE WONG
REVISED BY: EW
DATE REVISED: 1-27-16

LAST REVISION 01-13-16
DATE PLOTTED => 07-MAR-2016
TIME PLOTTED => 13:01

Dist	COUNTY	ROUTE	POST MILES TOTAL PROJECT	SHEET No.	TOTAL SHEETS
04	SM	82,84	1.4/25.1, 23.1/24.1	141	196

Elaine Wong 1-28-16
REGISTERED ELECTRICAL ENGINEER DATE

2-16-16
PLANS APPROVAL DATE

REGISTERED PROFESSIONAL ENGINEER Elaine T. Wong No. 13753 Exp. 6-30-17 ELECTRICAL STATE OF CALIFORNIA

THE STATE OF CALIFORNIA OR ITS OFFICERS OR AGENTS SHALL NOT BE RESPONSIBLE FOR THE ACCURACY OR COMPLETENESS OF SCANNED COPIES OF THIS PLAN SHEET.

NOTE:

FOR ACCURATE RIGHT OF WAY DATA, CONTACT RIGHT OF WAY ENGINEERING AT THE DISTRICT OFFICE.

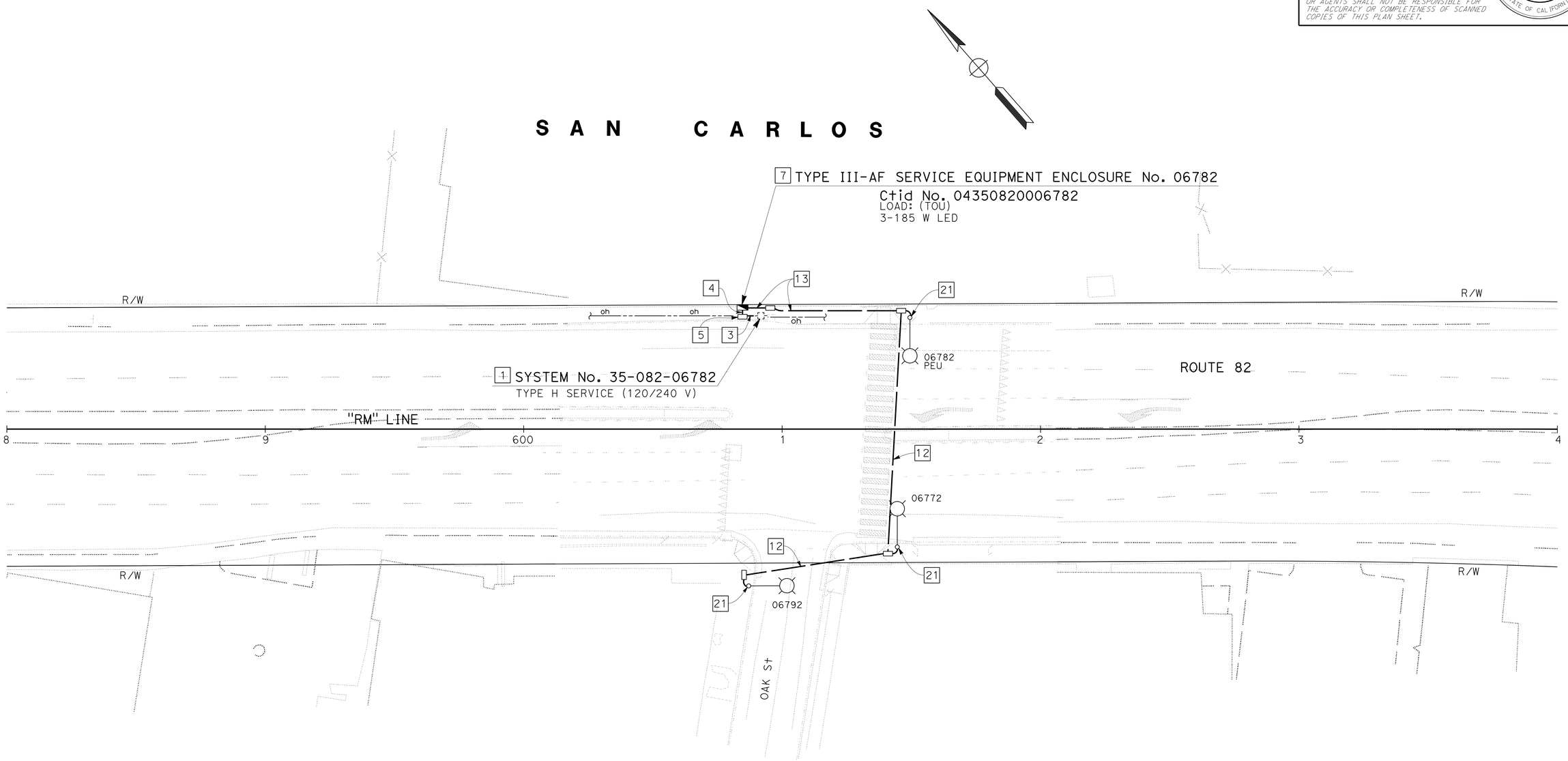

APPROVED FOR ELECTRICAL WORK ONLY

FOR NOTES, ABBREVIATION AND LEGEND, SEE SHEET E-1

LIGHTING
LOCATION No. 22
SCALE: 1" = 20'

E-23

STATE OF CALIFORNIA - DEPARTMENT OF TRANSPORTATION
Caltrans
ELECTRICAL

FUNCTIONAL SUPERVISOR: BEHZAD GOLEMOHAMMADI
CALCULATED-DESIGNED BY: JESSIE CABUGAO
CHECKED BY: ELAINE WONG
REVISED BY: EW
DATE REVISED: 1-27-16

LAST REVISION 01-13-16
DATE PLOTTED => 07-MAR-2016
TIME PLOTTED => 13:01

Dist	COUNTY	ROUTE	POST MILES TOTAL PROJECT	SHEET No.	TOTAL SHEETS
04	SM	82,84	1.4/25.1, 23.1/24.1	142	196

Elaine Wong 1-28-16
REGISTERED ELECTRICAL ENGINEER DATE

2-16-16
PLANS APPROVAL DATE

REGISTERED PROFESSIONAL ENGINEER
Elaine T. Wong
No. 13753
Exp. 6-30-17
ELECTRICAL
STATE OF CALIFORNIA

THE STATE OF CALIFORNIA OR ITS OFFICERS OR AGENTS SHALL NOT BE RESPONSIBLE FOR THE ACCURACY OR COMPLETENESS OF SCANNED COPIES OF THIS PLAN SHEET.

NOTE:

FOR ACCURATE RIGHT OF WAY DATA, CONTACT RIGHT OF WAY ENGINEERING AT THE DISTRICT OFFICE.

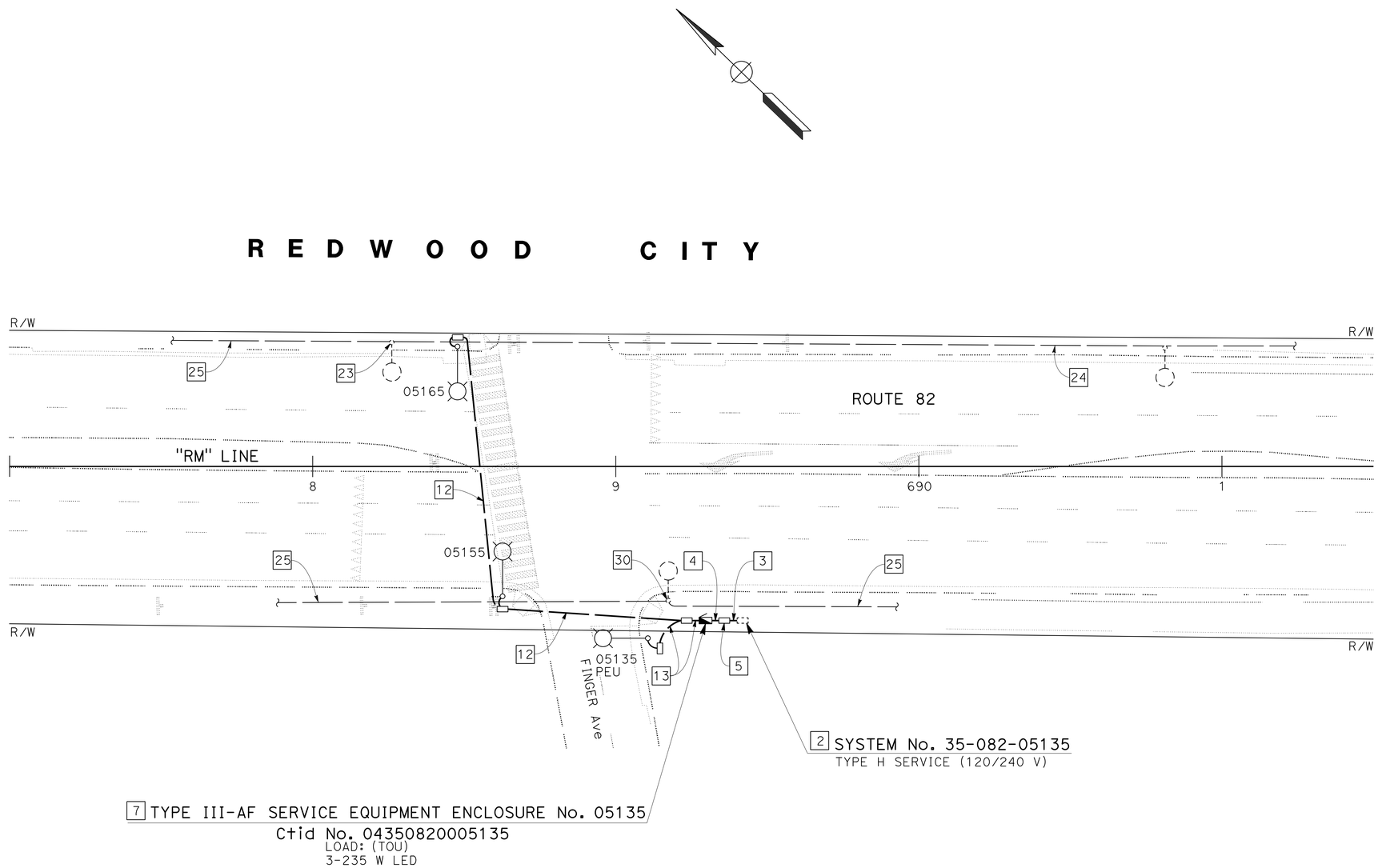

APPROVED FOR ELECTRICAL WORK ONLY

FOR NOTES, ABBREVIATION AND LEGEND, SEE SHEET E-1

LIGHTING
LOCATION No. 23
SCALE: 1" = 20'

E-24

REVISED BY	DATE REVISED
EW	1-27-16

JESSIE CABUGAO — CALCULATED-DESIGNED BY
ELAINE WONG — CHECKED BY
BEHZAD GOLEMOHAMMADI — FUNCTIONAL SUPERVISOR

STATE OF CALIFORNIA - DEPARTMENT OF TRANSPORTATION
Caltrans
ELECTRICAL

LAST REVISION 01-13-16 | DATE PLOTTED => 07-MAR-2016 | TIME PLOTTED => 13:01

Dist	COUNTY	ROUTE	POST MILES TOTAL PROJECT	SHEET No.	TOTAL SHEETS
04	SM	82,84	1.4/25.1, 23.1/24.1	143	196

Elaine Wong 1-28-16
REGISTERED ELECTRICAL ENGINEER DATE

2-16-16
PLANS APPROVAL DATE

REGISTERED PROFESSIONAL ENGINEER Elaine T. Wong No. 13753 Exp. 6-30-17 ELECTRICAL STATE OF CALIFORNIA

THE STATE OF CALIFORNIA OR ITS OFFICERS OR AGENTS SHALL NOT BE RESPONSIBLE FOR THE ACCURACY OR COMPLETENESS OF SCANNED COPIES OF THIS PLAN SHEET.

NOTE:

FOR ACCURATE RIGHT OF WAY DATA, CONTACT RIGHT OF WAY ENGINEERING AT THE DISTRICT OFFICE.

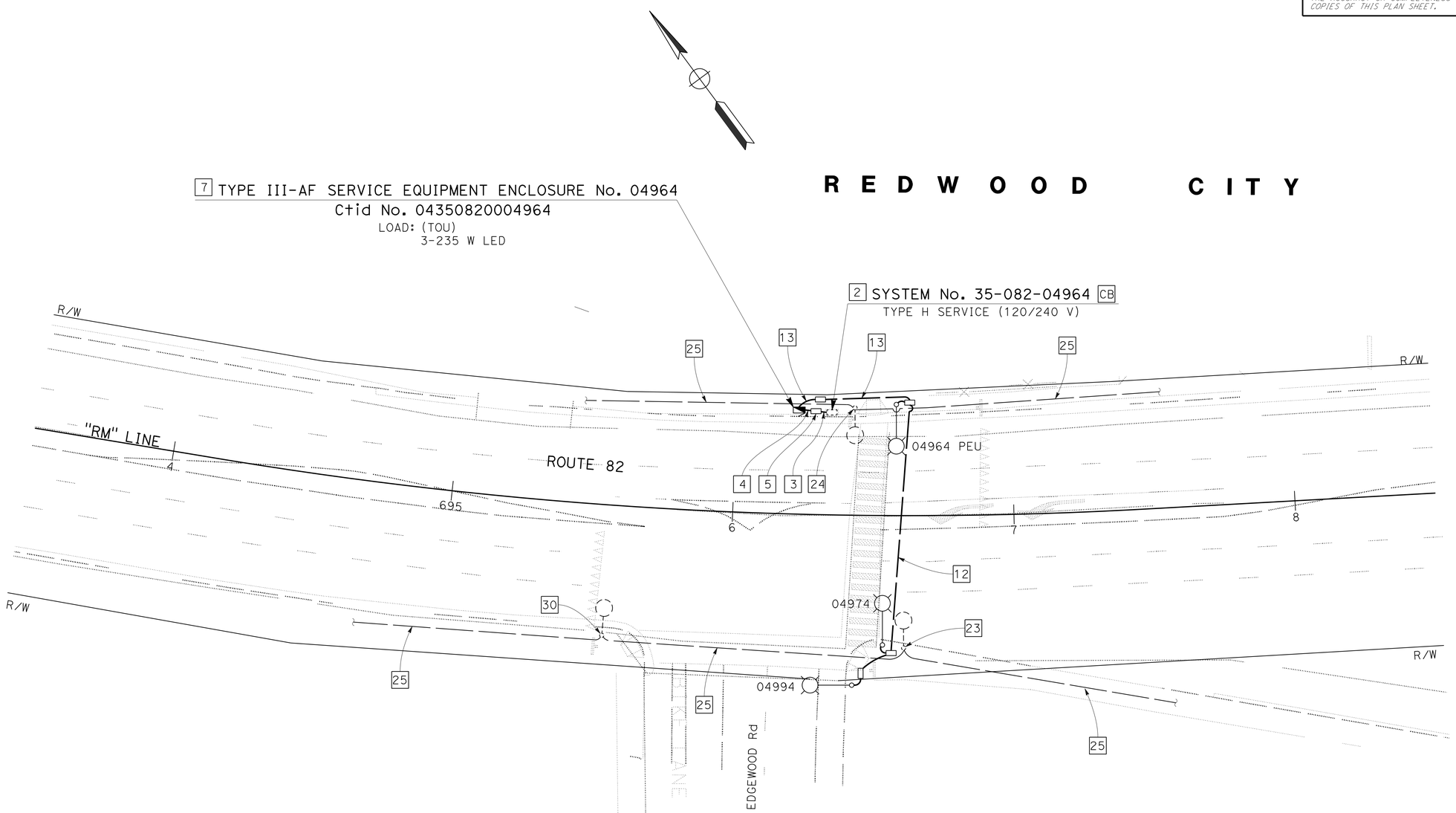

APPROVED FOR ELECTRICAL WORK ONLY

FOR NOTES, ABBREVIATION AND LEGEND, SEE SHEET E-1

LIGHTING
LOCATION No. 24
SCALE: 1" = 20'

E-25

STATE OF CALIFORNIA - DEPARTMENT OF TRANSPORTATION
Caltrans
ELECTRICAL

FUNCTIONAL SUPERVISOR: BEHZAD GOLEMOHAMMADI
CALCULATED-DESIGNED BY: JESSIE CABUGAO
CHECKED BY: ELAINE WONG
REVISED BY: EW
DATE REVISED: 1-27-16

LAST REVISION: 01-13-16
DATE PLOTTED => 07-MAR-2016
TIME PLOTTED => 13:01

BORDER LAST REVISED 7/2/2010
USERNAME => s127688
DGN FILE => 0415000086ua025.dgn
RELATIVE BORDER SCALE IS IN INCHES 0 1 2 3
UNIT 0698
PROJECT NUMBER & PHASE 04150000861

Dist	COUNTY	ROUTE	POST MILES TOTAL PROJECT	SHEET No.	TOTAL SHEETS
04	SM	82,84	1.4/25.1, 23.1/24.1	144	196

Elaine Wong 1-28-16
REGISTERED ELECTRICAL ENGINEER DATE

2-16-16
PLANS APPROVAL DATE

REGISTERED PROFESSIONAL ENGINEER Elaine T. Wong No. 13753 Exp. 6-30-17 ELECTRICAL STATE OF CALIFORNIA

THE STATE OF CALIFORNIA OR ITS OFFICERS OR AGENTS SHALL NOT BE RESPONSIBLE FOR THE ACCURACY OR COMPLETENESS OF SCANNED COPIES OF THIS PLAN SHEET.

NOTE:

FOR ACCURATE RIGHT OF WAY DATA, CONTACT RIGHT OF WAY ENGINEERING AT THE DISTRICT OFFICE.

CONDUCTOR SCHEDULE

CONDUCTOR DESIGNATION	NUMBER OF CONDUCTORS RUN NUMBER 1	2	3	4	5	6
No. 14 CONDUCTORS						
Ø2				6	3	9
Ø6	6	3	9			18
Ø8P			2			2
PBAØ8			1	1		2
PBA NEUTRAL			1	1		2
PHOTO ELECTRIC UNIT (PEU)					3	
SPARES	3		3	6	3	6
TOTAL No. 14	9	3	16	14	9	39
No. 8 CONDUCTORS						
LIGHTING (240 V)	2		2	2	2	
SIGNAL NEUTRAL	1	1	1	1	1	2
TOTAL No. 8	3	1	3	3	3	2
DLC						
2I2L					1	1
2I2U					1	1
2I3L					1	1
6J3U		1	1	1		1
6J4U		1	1	1		1
6J4L		1	1	1		1
TOTAL DLC		3	3	3	3	6
CONDUIT SIZE	3	3	3	3	3	2-3

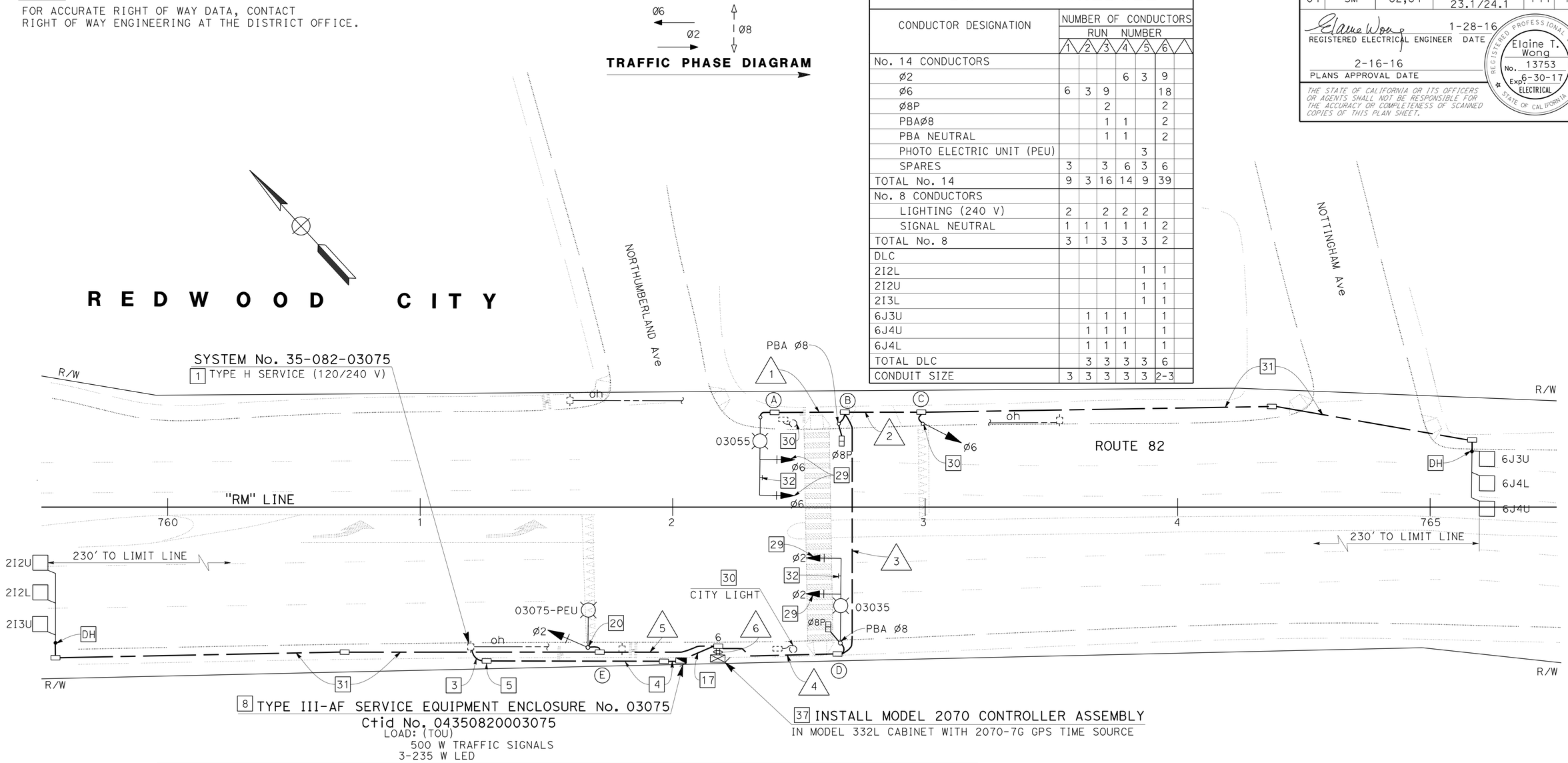

POLE AND EQUIPMENT SCHEDULE

LOCATION	STANDARD TYPE	SMA	LMA	VEHICLE SIGNAL MOUNTING MAST ARM	POLE	PED SIGNAL MOUNTING	PBA ø	LED LUMINAIRE (WATTS)	SPECIAL REQUIREMENT
A	(Mod) 19-4-100	30	15	MAS MAS				185	22 29
B	1-B					TP-1-T	→ 8		APS WITH LED COUNTDOWN PEDESTRIAN SIGNAL 22
C	1-B				TV-1-T				9 29
D	(Mod) 19-4-100	30	15	MAS MAS		SP-1-T	← 8	185	APS WITH LED COUNTDOWN PEDESTRIAN SIGNAL F=15' 22 29
E	(Mod) 15TS		15		SV-1-T			185	9 22

APPROVED FOR ELECTRICAL WORK ONLY

FOR NOTES, ABBREVIATION AND LEGEND, SEE SHEET E-1

SIGNAL AND LIGHTING
LOCATION No. 25
SCALE: 1" = 20'

E-26

STATE OF CALIFORNIA - DEPARTMENT OF TRANSPORTATION
ELECTRICAL
Caltrans

FUNCTIONAL SUPERVISOR: BEHZAD GOLEMOHAMMADI
CALCULATED-DESIGNED BY: JESSIE CABUGAO
CHECKED BY: ELAINE WONG
REVISED BY: EW
DATE REVISED: 1-27-16

LAST REVISION 01-13-16 | DATE PLOTTED => 07-MAR-2016 | TIME PLOTTED => 13:01

Dist	COUNTY	ROUTE	POST MILES TOTAL PROJECT	SHEET No.	TOTAL SHEETS
04	SM	82,84	1.4/25.1, 23.1/24.1	145	196

Elaine Wong 1-28-16
REGISTERED ELECTRICAL ENGINEER DATE

2-16-16
PLANS APPROVAL DATE

REGISTERED PROFESSIONAL ENGINEER
Elaine T. Wong
No. 13753
Exp. 6-30-17
ELECTRICAL
STATE OF CALIFORNIA

THE STATE OF CALIFORNIA OR ITS OFFICERS OR AGENTS SHALL NOT BE RESPONSIBLE FOR THE ACCURACY OR COMPLETENESS OF SCANNED COPIES OF THIS PLAN SHEET.

NOTE:

FOR ACCURATE RIGHT OF WAY DATA, CONTACT RIGHT OF WAY ENGINEERING AT THE DISTRICT OFFICE.

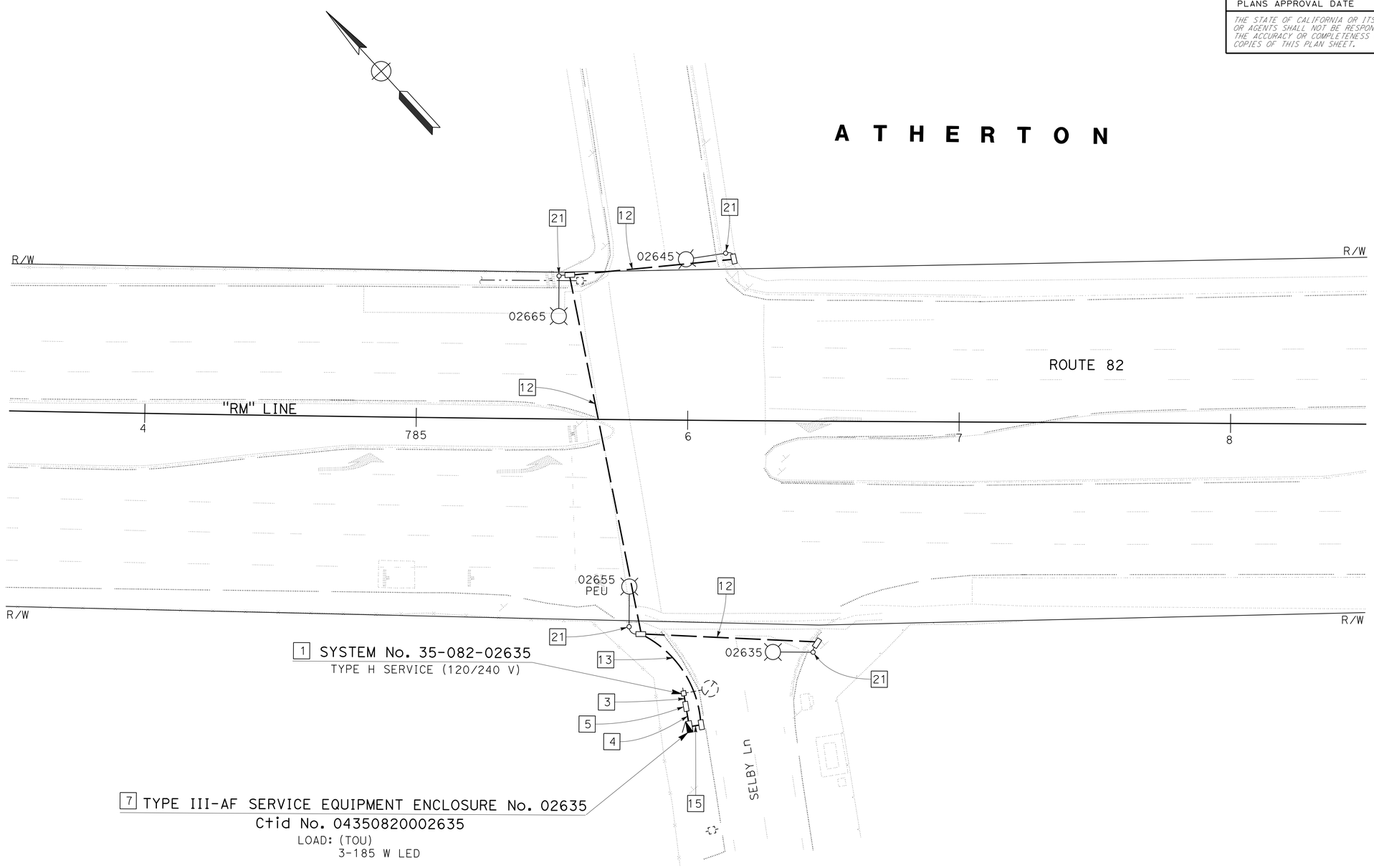

APPROVED FOR ELECTRICAL WORK ONLY

FOR NOTES, ABBREVIATION AND LEGEND, SEE SHEET E-1

LIGHTING
LOCATION No. 26
SCALE: 1" = 20'

E-27

STATE OF CALIFORNIA - DEPARTMENT OF TRANSPORTATION
Caltrans
ELECTRICAL

FUNCTIONAL SUPERVISOR: BEHZAD GOLEMOHAMMADI
CALCULATED-DESIGNED BY: JESSIE CABUGAO
CHECKED BY: ELAINE WONG
REVISED BY: EW
DATE REVISED: 1-27-16

LAST REVISION DATE PLOTTED => 07-MAR-2016
01-13-16 TIME PLOTTED => 13:01

Dist	COUNTY	ROUTE	POST MILES TOTAL PROJECT	SHEET No.	TOTAL SHEETS
04	SM	82,84	1.4/25.1, 23.1/24.1	146	196

Elaine Wong 1-28-16
REGISTERED ELECTRICAL ENGINEER DATE

2-16-16
PLANS APPROVAL DATE

REGISTERED PROFESSIONAL ENGINEER Elaine T. Wong No. 13753 Exp. 6-30-17 ELECTRICAL STATE OF CALIFORNIA

THE STATE OF CALIFORNIA OR ITS OFFICERS OR AGENTS SHALL NOT BE RESPONSIBLE FOR THE ACCURACY OR COMPLETENESS OF SCANNED COPIES OF THIS PLAN SHEET.

NOTE:

FOR ACCURATE RIGHT OF WAY DATA, CONTACT RIGHT OF WAY ENGINEERING AT THE DISTRICT OFFICE.

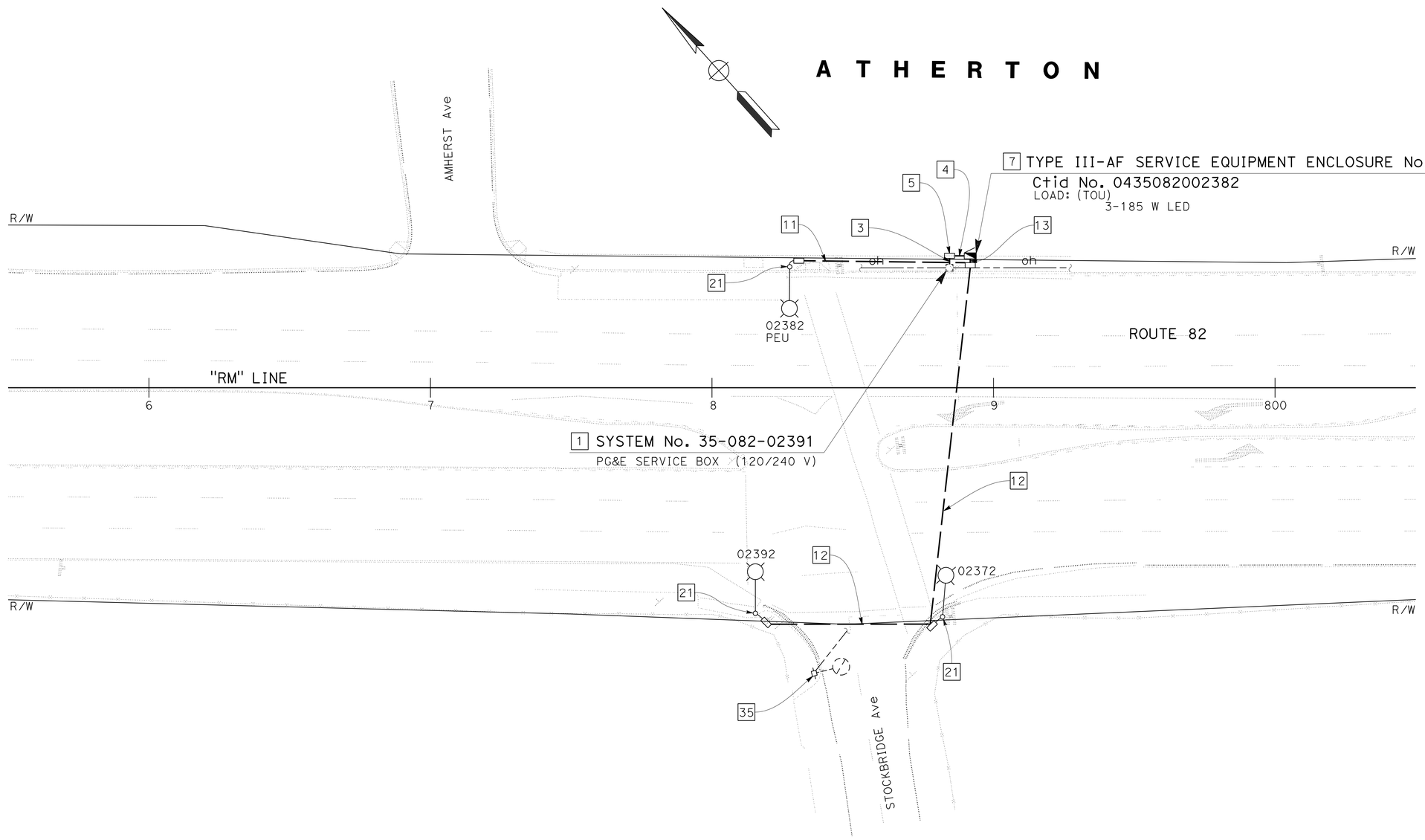

APPROVED FOR ELECTRICAL WORK ONLY

FOR NOTES, ABBREVIATION AND LEGEND, SEE SHEET E-1

LIGHTING
LOCATION No. 27
SCALE: 1" = 20'

E-28

REVISED BY	DATE REVISED
EW	1-27-16

JESSIE CABUGAO — ELAINE WONG — CALCULATED-DESIGNED BY — CHECKED BY

FUNCTIONAL SUPERVISOR: BEHZAD GOLEMOHAMMADI

STATE OF CALIFORNIA - DEPARTMENT OF TRANSPORTATION
Caltrans
ELECTRICAL

LAST REVISION 01-13-16 | DATE PLOTTED => 07-MAR-2016 | TIME PLOTTED => 13:01

Dist	COUNTY	ROUTE	POST MILES TOTAL PROJECT	SHEET No.	TOTAL SHEETS
04	SM	82,84	1.4/25.1, 23.1/24.1	147	196

Elaine Wong 1-28-16
REGISTERED ELECTRICAL ENGINEER DATE

2-16-16
PLANS APPROVAL DATE

REGISTERED PROFESSIONAL ENGINEER Elaine T. Wong No. 13753 Exp. 6-30-17 ELECTRICAL STATE OF CALIFORNIA

THE STATE OF CALIFORNIA OR ITS OFFICERS OR AGENTS SHALL NOT BE RESPONSIBLE FOR THE ACCURACY OR COMPLETENESS OF SCANNED COPIES OF THIS PLAN SHEET.

NOTE:

FOR ACCURATE RIGHT OF WAY DATA, CONTACT RIGHT OF WAY ENGINEERING AT THE DISTRICT OFFICE.

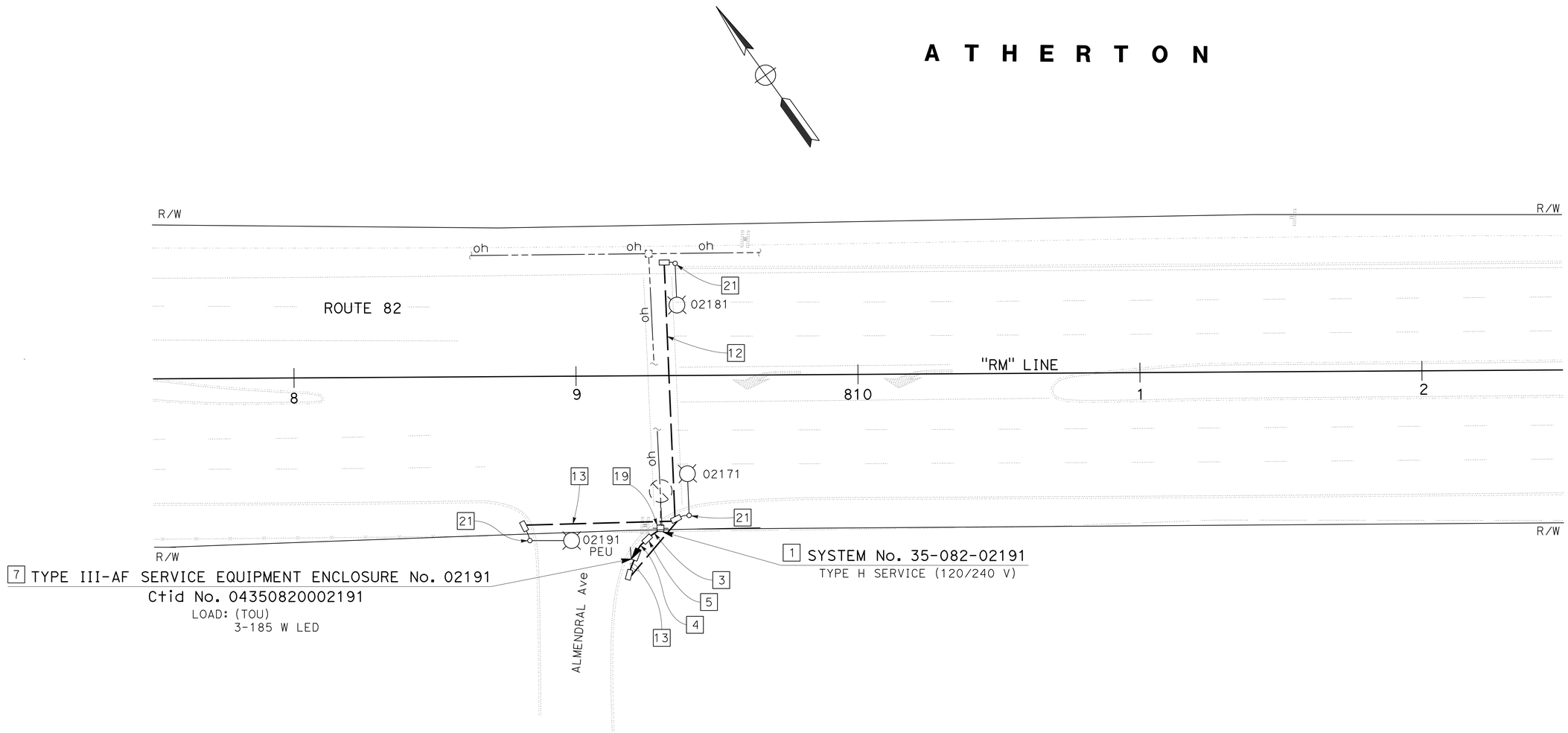

APPROVED FOR ELECTRICAL WORK ONLY

FOR NOTES, ABBREVIATION AND LEGEND, SEE SHEET E-1

LIGHTING
LOCATION No. 28
SCALE: 1" = 20'

E-29

REVISED BY	EW
DATE REVISED	1-27-16
JESSIE CABUGAO	ELAINE WONG
CALCULATED-DESIGNED BY	CHECKED BY
FUNCTIONAL SUPERVISOR	BEHZAD GOLEMOHAMMADI

STATE OF CALIFORNIA - DEPARTMENT OF TRANSPORTATION
Caltrans
ELECTRICAL

LAST REVISION 01-13-16 | DATE PLOTTED => 07-MAR-2016 | TIME PLOTTED => 13:01

Dist	COUNTY	ROUTE	POST MILES TOTAL PROJECT	SHEET No.	TOTAL SHEETS
04	SM	82,84	1.4/25.1, 23.1/24.1	148	196

Elaine Wong 1-28-16
REGISTERED ELECTRICAL ENGINEER DATE

2-16-16
PLANS APPROVAL DATE

REGISTERED PROFESSIONAL ENGINEER Elaine T. Wong No. 13753 Exp. 6-30-17 ELECTRICAL STATE OF CALIFORNIA

THE STATE OF CALIFORNIA OR ITS OFFICERS OR AGENTS SHALL NOT BE RESPONSIBLE FOR THE ACCURACY OR COMPLETENESS OF SCANNED COPIES OF THIS PLAN SHEET.

NOTE:

FOR ACCURATE RIGHT OF WAY DATA, CONTACT RIGHT OF WAY ENGINEERING AT THE DISTRICT OFFICE.

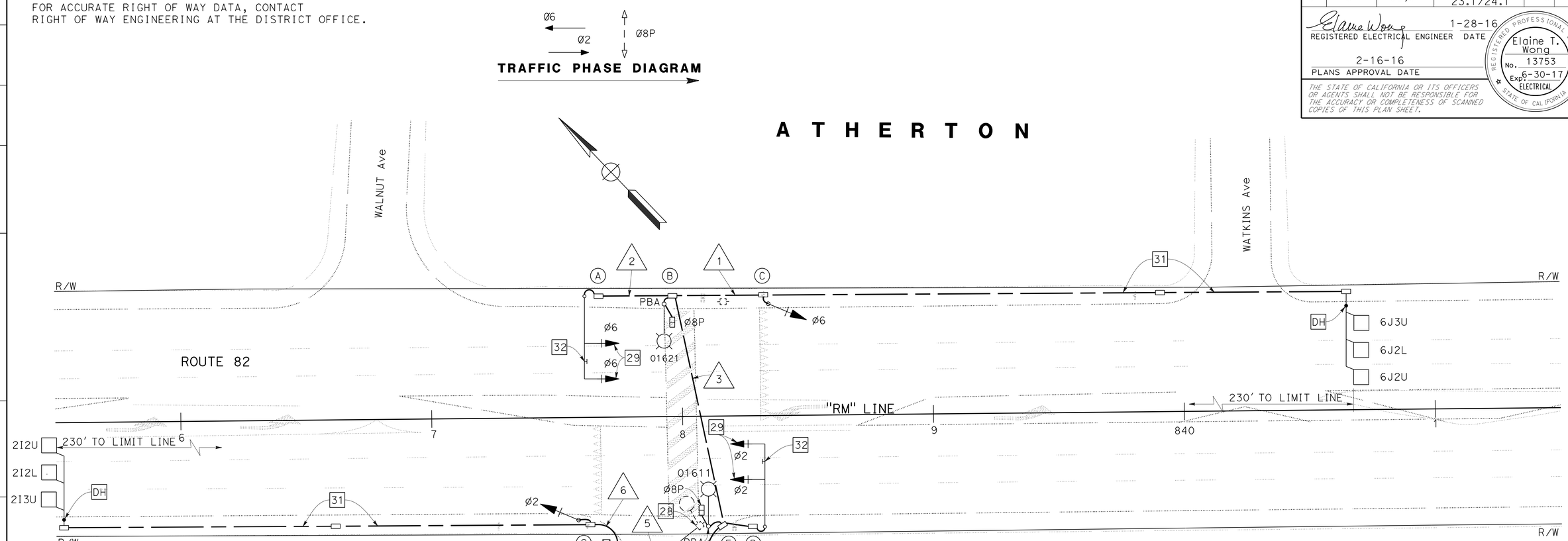

CONDUCTOR SCHEDULE

CONDUCTOR DESIGNATION	NUMBER OF CONDUCTORS RUN NUMBER 1	2	3	4	5	6	7	
No. 14 CONDUCTORS								
Ø2				6	6	2	8	
Ø6	6	2	8	8	8		8	
Ø8P			2	2	2		2	
PPBØ8			1	2	2		2	
PPB NEUTRAL			1	2	2		2	
PHOTO ELECTRIC UNIT (PEU)					3			
SPARES	3		3	3	3	3	6	
TOTAL No. 14	9	2	15	23	26	5	28	
No. 8 CONDUCTORS								
LIGHTING (240 V)			2	2	2			
SIGNAL NEUTRAL	1	1	1	2	2	1	3	
TOTAL No. 8	1	1	3	4	4	1	3	
DLC						1	1	
2I2L						1	1	
2I2U						1	1	
2I3U		1	1	1	1		1	
6J3U		1	1	1	1		1	
6J4U		1	1	1	1		1	
6J4L		3	3	3	3	3	6	
TOTAL DLC	3	3	3	3	3	3	2-3	
CONDUIT SIZE								

POLE AND EQUIPMENT SCHEDULE

LOCATION	STANDARD TYPE	SMA	LMA	VEHICLE SIGNAL MOUNTING MAST ARM	POLE	PED SIGNAL MOUNTING	PBA ø	LED LUMINAIRE (WATTS)	SPECIAL REQUIREMENT
A	23-4-100	35		MAS MAS					29 F=15'
B	(Mod) 15TS		15			SP-1-T	8	185	22 29 APS WITH LED COUNTDOWN PEDESTRIAN SIGNAL
C	1-B				TV-1-T				9
D	23-4-100	35		MAS MAS					29 F=15'
E	(Mod) 15TS		15			SP-1-T	8	185	22 29 APS WITH LED COUNTDOWN PEDESTRIAN SIGNAL
F	(Mod) 15		15					185	22
G	1-B				TV-1-T				9

SYSTEM No. 35-082-01651

1 TYPE H SERVICE (120/240 V)

8 TYPE III-AF SERVICE EQUIPMENT ENCLOSURE No. 01651

Ctid No. 04350820001651

LOAD: (TOU)

500 W TRAFFIC SIGNALS

3-185 W LED

6 37 INSTALL MODEL 2070 CONTROLLER ASSEMBLY

IN MODEL 332L CABINET WITH 2070-7G GPS TIME SOURCE

APPROVED FOR ELECTRICAL WORK ONLY

FOR NOTES, ABBREVIATION AND LEGEND, SEE SHEET E-1

SIGNAL AND LIGHTING

LOCATION No. 29

SCALE: 1" = 20'

E-30

REVISED BY	DATE REVISED
EW	1-27-16

CALCULATED-DESIGNED BY: JESSIE CABUGAO
CHECKED BY: ELAINE WONG
FUNCTIONAL SUPERVISOR: BEHZAD GOLEMOHAMMADI

STATE OF CALIFORNIA - DEPARTMENT OF TRANSPORTATION
Caltrans
ELECTRICAL

LAST REVISION 01-13-16 | DATE PLOTTED => 07-MAR-2016 | TIME PLOTTED => 13:01

Dist	COUNTY	ROUTE	POST MILES TOTAL PROJECT	SHEET No.	TOTAL SHEETS
04	SM	82,84	1.4/25.1, 23.1/24.1	149	196

Elaine Wong 1-28-16
REGISTERED ELECTRICAL ENGINEER DATE

2-16-16
PLANS APPROVAL DATE

REGISTERED PROFESSIONAL ENGINEER Elaine T. Wong No. 13753 Exp. 6-30-17 ELECTRICAL STATE OF CALIFORNIA

THE STATE OF CALIFORNIA OR ITS OFFICERS OR AGENTS SHALL NOT BE RESPONSIBLE FOR THE ACCURACY OR COMPLETENESS OF SCANNED COPIES OF THIS PLAN SHEET.

NOTE:

FOR ACCURATE RIGHT OF WAY DATA, CONTACT RIGHT OF WAY ENGINEERING AT THE DISTRICT OFFICE.

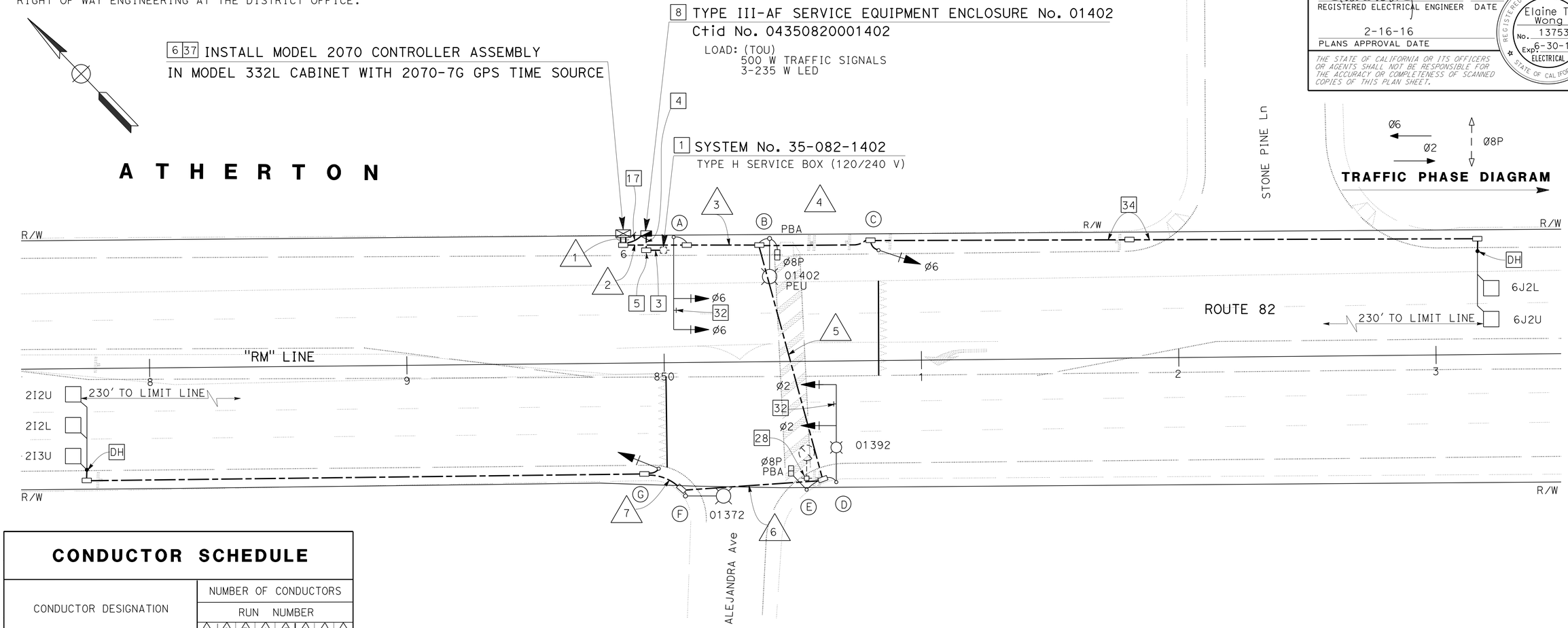

CONDUCTOR SCHEDULE

CONDUCTOR DESIGNATION	NUMBER OF CONDUCTORS RUN NUMBER 1	2	3	4	5	6	7	
No. 14 CONDUCTORS								
Ø2	8	8	8		8	2	2	
Ø6	8	8	2	2				
Ø8P	4	4	4		2			
PPBØ8	2	2	2		1			
PPB NEUTRAL	2	2	2		1			
PHOTO ELECTRIC UNIT (PEU)		3	3					
SPARES	6	6	6	3	3	3	3	
TOTAL No. 14		33	27	5	15	5	5	
No. 6 SERVICE TO CONTROLLER	2							
No. 8 CONDUCTORS								
LIGHTING (240 V)		2	2		2	2		
SIGNAL NEUTRAL	2	2	2	1	1	1	1	
TOTAL No. 8	2	4	4	1	3	3	1	
DLC								
2I2U	1	1			1	1	1	
2I2L	1	1			1	1	1	
2I3U	1	1			1	1	1	
6J2U	1	1	1	1				
6J3U	1	1	1	1				
TOTAL DLC	5	5	2	2	3	3	3	
CONDUIT SIZE	2-3"	2-3"	3	3	3	3	3	

POLE AND EQUIPMENT SCHEDULE

LOCATION	STANDARD TYPE	SMA	LMA	VEHICLE SIGNAL MOUNTING MAST ARM	POLE	PED SIGNAL MOUNTING	PBA ø	LED LUMINAIRE (WATTS)	SPECIAL REQUIREMENT
A	23-4-100	35	15	MAS MAS					29 F=15'
B	(Mod) 15TS		15			SP-1-T	8	235	9 22 APS WITH LED COUNTDOWN PEDESTRIAN SIGNAL
C	1-B				TV-1-T				
D	(Mod) 24-4-100	35	15	MAS MAS				235	22 29 F=15'
E	1-B					TP-1-T	8		APS WITH LED COUNTDOWN PEDESTRIAN SIGNAL
F	(Mod) 15		15					235	22
G	1-B				TV-1-T				9

APPROVED FOR ELECTRICAL WORK ONLY

FOR NOTES, ABBREVIATION AND LEGEND, SEE SHEET E-1

PEDESTRIAN HYBRID BEACONS AND LIGHTING
LOCATION No. 30
SCALE: 1" = 20'

E-31

REVISED BY	DATE REVISED
EW	1-27-16

JESSIE CABUGAO — ELAINE WONG — CALCULATED-DESIGNED BY — CHECKED BY

FUNCTIONAL SUPERVISOR: BEHZAD GOLEMOHAMMADI

STATE OF CALIFORNIA - DEPARTMENT OF TRANSPORTATION — ELECTRICAL — Caltrans

LAST REVISION 08-18-15 — DATE PLOTTED => 07-MAR-2016 — TIME PLOTTED => 13:01

Dist	COUNTY	ROUTE	POST MILES TOTAL PROJECT	SHEET No.	TOTAL SHEETS
04	SM	82,84	1.4/25.1, 23.1/24.1	150	196

Elaine Wong 1-28-16
REGISTERED ELECTRICAL ENGINEER DATE

2-16-16
PLANS APPROVAL DATE

REGISTERED PROFESSIONAL ENGINEER Elaine T. Wong No. 13753 Exp. 6-30-17 ELECTRICAL STATE OF CALIFORNIA

THE STATE OF CALIFORNIA OR ITS OFFICERS OR AGENTS SHALL NOT BE RESPONSIBLE FOR THE ACCURACY OR COMPLETENESS OF SCANNED COPIES OF THIS PLAN SHEET.

NOTE:

FOR ACCURATE RIGHT OF WAY DATA, CONTACT RIGHT OF WAY ENGINEERING AT THE DISTRICT OFFICE.

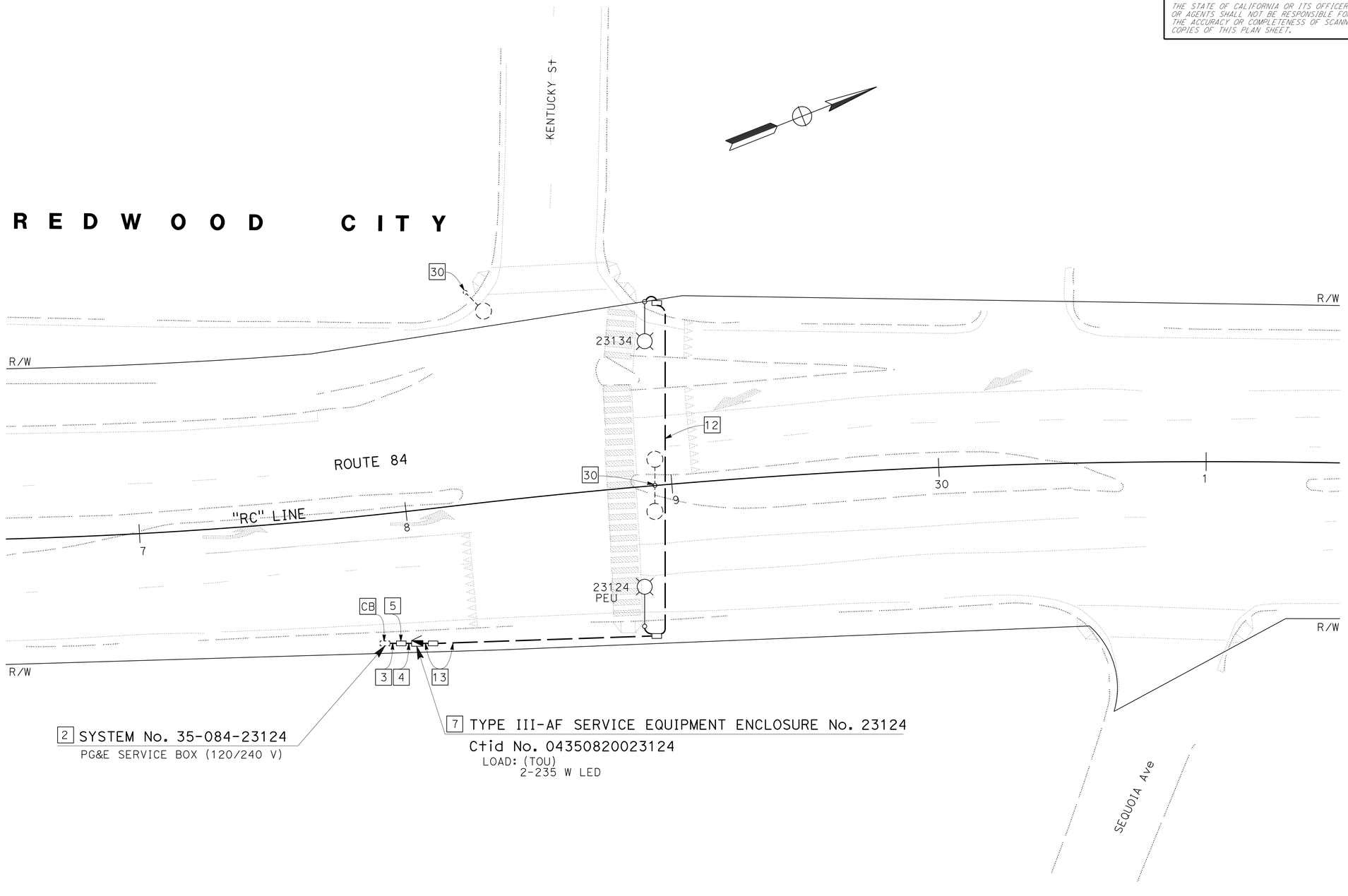

2 SYSTEM No. 35-084-23124
PG&E SERVICE BOX (120/240 V)

7 TYPE III-AF SERVICE EQUIPMENT ENCLOSURE No. 23124
Ctid No. 04350820023124
LOAD: (TOU)
2-235 W LED

LIGHTING
LOCATION No. 31
SCALE: 1" = 20'

APPROVED FOR ELECTRICAL WORK ONLY

FOR NOTES, ABBREVIATION AND LEGEND, SEE SHEET E-1

E-32

REVISED BY	EW	JESSIE CABUGAO	CALCULATED-DESIGNED BY
DATE REVISED	1-27-16	ELAINE WONG	CHECKED BY

FUNCTIONAL SUPERVISOR: BEHZAD GOLEMOHAMMADI

STATE OF CALIFORNIA - DEPARTMENT OF TRANSPORTATION
Caltrans
ELECTRICAL

LAST REVISION 01-13-16 | DATE PLOTTED => 07-MAR-2016 | TIME PLOTTED => 13:01

Dist	COUNTY	ROUTE	POST MILES TOTAL PROJECT	SHEET No.	TOTAL SHEETS
04	SM	82,84	1.4/25.1, 23.1/24.1	151	196

Elaine Wong 1-28-16
REGISTERED ELECTRICAL ENGINEER DATE

2-16-16
PLANS APPROVAL DATE

REGISTERED PROFESSIONAL ENGINEER Elaine T. Wong No. 13753 Exp. 6-30-17 ELECTRICAL STATE OF CALIFORNIA

THE STATE OF CALIFORNIA OR ITS OFFICERS OR AGENTS SHALL NOT BE RESPONSIBLE FOR THE ACCURACY OR COMPLETENESS OF SCANNED COPIES OF THIS PLAN SHEET.

NOTE:

FOR ACCURATE RIGHT OF WAY DATA, CONTACT RIGHT OF WAY ENGINEERING AT THE DISTRICT OFFICE.

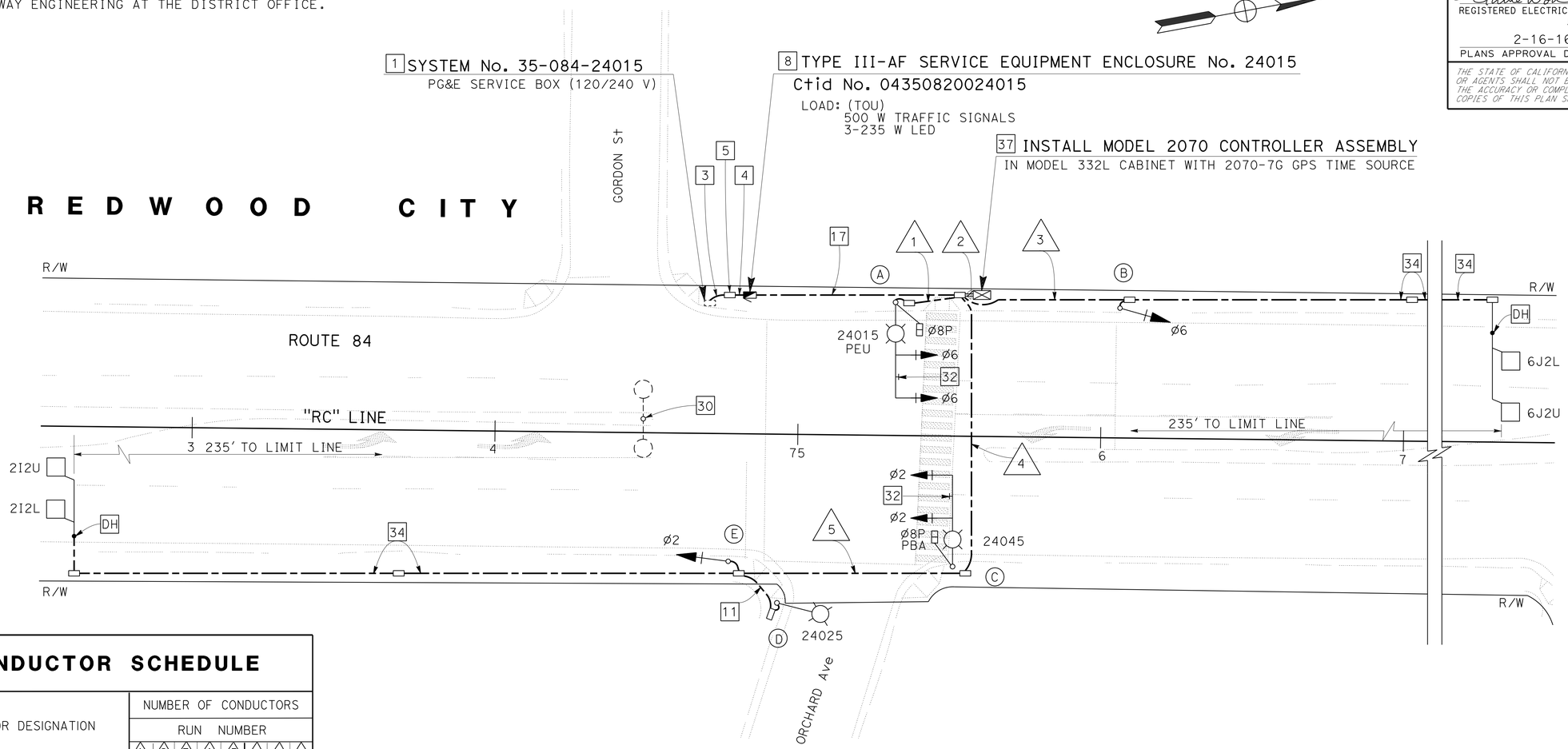

CONDUCTOR SCHEDULE

CONDUCTOR DESIGNATION	NUMBER OF CONDUCTORS RUN NUMBER 1	2	3	4	5			
No. 14 CONDUCTORS								
Ø2		8		8	2			
Ø6	6	8	2					
Ø8P	2	4		2				
PPBØ8	1	2	2					
PPB NEUTRAL	1	2		1				
PHOTO ELECTRIC UNIT (PEU)	3							
SPARES	3	9	3	3	3			
TOTAL No. 14	14	33	5	15	5			
No. 6 SERVICE TO CONTROLLER		2						
No. 8 CONDUCTORS								
LIGHTING (240 V)	2			2	2			
SIGNAL NEUTRAL	1	2	1	1	1			
TOTAL No. 8	3	2	1	3	3			
DLC								
2I2U		1		1	1			
2I2L		1		1	1			
2I3U								
6J2U		1	1					
6J3U		1	1					
TOTAL DLC		4	2	2	2			
CONDUIT SIZE	2	2-3"	3	3	3			

POLE AND EQUIPMENT SCHEDULE

LOCATION	STANDARD TYPE	SMA	LMA	VEHICLE SIGNAL MOUNTING MAST ARM	POLE	PED SIGNAL MOUNTING	PBA ø	LED LUMINAIRE (WATTS)	SPECIAL REQUIREMENT
A	24A-4-100	35	15	MAS MAS		SP-1-T	← 8	235	29 APS WITH LED COUNTDOWN PEDESTRIAN SIGNAL F=15'
B	1-B				TV-1-T				9
C	24A-4-100	35	15	MAS MAS		SP-1-T	← 8	235	29 APS WITH LED COUNTDOWN PEDESTRIAN SIGNAL F=15'
D	15		15					235	
E	1-B				TV-1-T				9

APPROVED FOR ELECTRICAL WORK ONLY

FOR NOTES, ABBREVIATION AND LEGEND, SEE SHEET E-1

SIGNAL AND LIGHTING
LOCATION No. 32
SCALE: 1" = 20'

E-33

REVISED BY	DATE REVISED
EW	1-27-16

JESSIE CABUGAO — ELAINE WONG — CALCULATED-DESIGNED BY — CHECKED BY

FUNCTIONAL SUPERVISOR: BEHZAD GOLEMOHAMMADI

STATE OF CALIFORNIA - DEPARTMENT OF TRANSPORTATION — Caltrans — ELECTRICAL

LAST REVISION 01-13-16 — DATE PLOTTED => 07-MAR-2016 — TIME PLOTTED => 13:01

Dist	COUNTY	ROUTE	POST MILES TOTAL PROJECT	SHEET No.	TOTAL SHEETS
04	SM	82,84	1.4/25.1, 23.1/24.1	152	196

Elaine Wong 1-28-16
REGISTERED ELECTRICAL ENGINEER DATE

2-16-16
PLANS APPROVAL DATE

REGISTERED PROFESSIONAL ENGINEER Elaine T. Wong No. 13753 Exp. 6-30-17 ELECTRICAL STATE OF CALIFORNIA

THE STATE OF CALIFORNIA OR ITS OFFICERS OR AGENTS SHALL NOT BE RESPONSIBLE FOR THE ACCURACY OR COMPLETENESS OF SCANNED COPIES OF THIS PLAN SHEET.

NOTE:

FOR ACCURATE RIGHT OF WAY DATA, CONTACT RIGHT OF WAY ENGINEERING AT THE DISTRICT OFFICE.

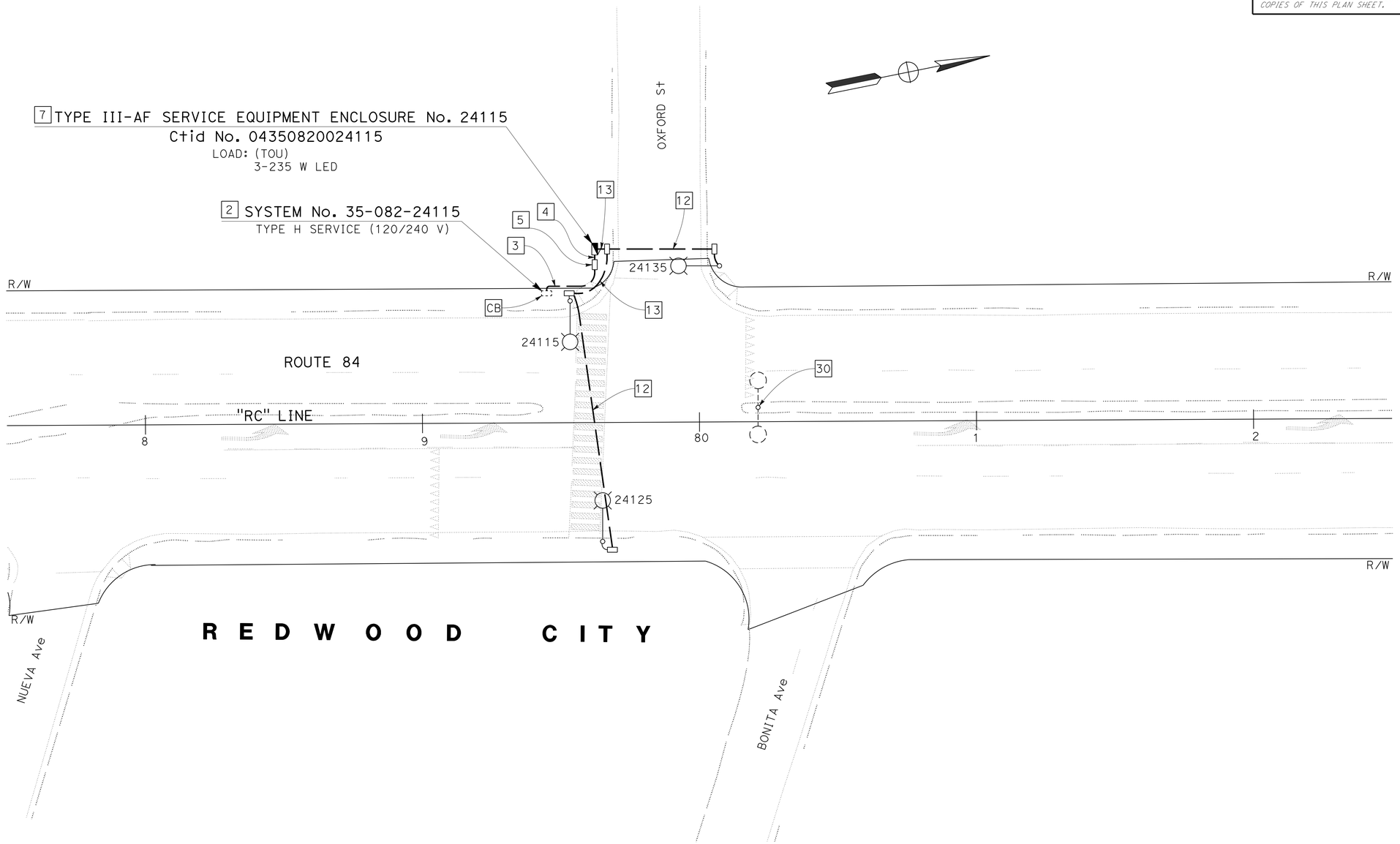

APPROVED FOR ELECTRICAL WORK ONLY

FOR NOTES, ABBREVIATION AND LEGEND, SEE SHEET E-1

LIGHTING
LOCATION No. 33
SCALE: 1" = 20'

E-34

REVISED BY	DATE REVISED
EW	1-27-16

JESSIE CABUGAO — ELAINE WONG
CALCULATED-DESIGNED BY — CHECKED BY
FUNCTIONAL SUPERVISOR: BEHZAD GOLEMOHAMMADI

STATE OF CALIFORNIA - DEPARTMENT OF TRANSPORTATION
Caltrans
ELECTRICAL

LAST REVISION 01-13-16 | DATE PLOTTED => 07-MAR-2016 | TIME PLOTTED => 13:01

Dist	COUNTY	ROUTE	POST MILES TOTAL PROJECT	SHEET No.	TOTAL SHEETS
04	SM	82,84	1.4/25.1, 23.1/24.1	153	196

Elaine Wong 1-28-16
REGISTERED ELECTRICAL ENGINEER DATE

2-16-16
PLANS APPROVAL DATE

REGISTERED PROFESSIONAL ENGINEER Elaine T. Wong No. 13753 Exp. 6-30-17 ELECTRICAL STATE OF CALIFORNIA

THE STATE OF CALIFORNIA OR ITS OFFICERS OR AGENTS SHALL NOT BE RESPONSIBLE FOR THE ACCURACY OR COMPLETENESS OF SCANNED COPIES OF THIS PLAN SHEET.

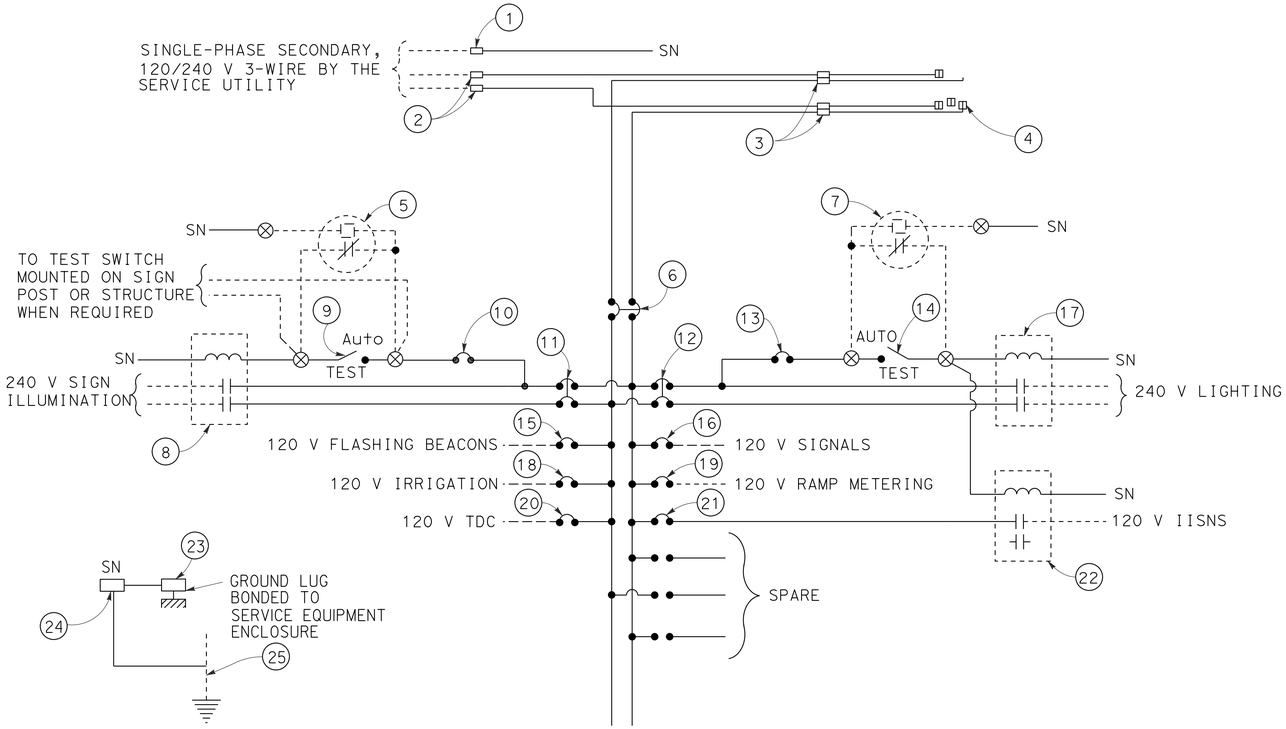

120/240 V SERVICE WIRING DIAGRAM (TYPICAL)

LEGEND:

P	POLE		EXTERNAL CONDUCTOR
CB	CIRCUIT BREAKER		CONDUCTOR OR BUS
A	AMPERE		TIE POINT
V	VOLT		CONDUCTOR COIL
SN	SOLID NEUTRAL		CONTACTOR, CONTACT NO
NO	NORMALLY OPEN		TERMINAL BLOCK
NC	NORMALLY CLOSED		CONTACTOR, CONTACT NC
			ENCLOSURE
			GROUND

TYPE III-A SERVICE (120/240 V) EQUIPMENT LEGEND

ITEM No.	COMPONENT	NAMEPLATE DESCRIPTION
1	NEUTRAL LUG	
2	LANDING LUG	
3	TEST BYPASS FACILITY	
4	METER SOCKET AND SUPPORT	
5	PHOTOELECTRIC UNIT	
6	100 A, 240 V, 2P, CB	MAIN BREAKER
7	PHOTOELECTRIC UNIT	
8	30 A, 2PNO, CONTACTOR	SIGN ILLUMINATION
9	15 A, 1P, TEST SWITCH	SIGN ILLUMINATION TEST SWITCH
10	15 A, 120 V, 1P, CB	SIGN ILLUMINATION CONTROL
11	30 A, 240 V, 2P, CB	SIGN ILLUMINATION
12	30 A, 240 V, 2P, CB	LIGHTING
13	15 A, 120 V, 1P, CB	LIGHTING CONTROL

ITEM No.	COMPONENT	NAMEPLATE DESCRIPTION
14	15 A, 1P, TEST SWITCH	LIGHTING CONTROL TEST SWITCH
15	15 A, 120 V, 1P, CB	FLASHING BEACON
16	50 A, 120 V, 1P, CB	SIGNALS
17	30 A, 2PNO, CONTACTOR	LIGHTING
18	20 A, 120 V, 1P, CB	IRRIGATION
19	30 A, 120 V, 1P, CB	RAMP METERING
20	15 A, 120 V, 1P, CB	TELEPHONE DEMARCATION CABINET
21	15 A, 120 V, 1P, CB	IISNS
22	30 A, 2PNO, CONTACTOR	IISNS
23	GROUND LUG	
24	SOLID NEUTRAL TERMINAL STRIP	
25	GROUNDING ELECTRODE	

NOTES: (FOR SERVICE EQUIPMENT)

1. VOLTAGE RATINGS OF SERVICE EQUIPMENT SHALL CONFORM TO THE SERVICE VOLTAGES INDICATED ON THE PLANS.
2. UNLESS OTHERWISE INDICATED ON THE PLANS, ALL SERVICE EQUIPMENT ITEMS SHALL BE PROVIDED FOR EACH SERVICE EQUIPMENT ENCLOSURE AS SHOWN.
3. ITEM No. 1 AND 24 SHALL BE ISOLATED FROM THE CABINET.
4. METER SOCKETS SHALL BE 5 CLIP TYPE.
5. PG&E SHALL INSTALL THE TIME-OF-USE METER.

ELECTRICAL DETAILS

NO SCALE

E-35

STATE OF CALIFORNIA - DEPARTMENT OF TRANSPORTATION
Caltrans
ELECTRICAL

FUNCTIONAL SUPERVISOR: BEHZAD GOLEMOHAMMADI
CALCULATED-DESIGNED BY: JESSIE CABUGAO
CHECKED BY: ELAINE WONG
REVISED BY: EW
DATE REVISED: 1-27-16

LAST REVISION 10-20-15 | DATE PLOTTED => 07-MAR-2016 | TIME PLOTTED => 13:01

Dist	COUNTY	ROUTE	POST MILES TOTAL PROJECT	SHEET No.	TOTAL SHEETS
04	SM	82,84	1.4/25.1, 23.1/24.1	154	196

Elaine Wong 1-28-16
REGISTERED ELECTRICAL ENGINEER DATE

2-16-16
PLANS APPROVAL DATE

REGISTERED PROFESSIONAL ENGINEER
Elaine T. Wong
No. 13753
Exp. 6-30-17
ELECTRICAL
STATE OF CALIFORNIA

THE STATE OF CALIFORNIA OR ITS OFFICERS OR AGENTS SHALL NOT BE RESPONSIBLE FOR THE ACCURACY OR COMPLETENESS OF SCANNED COPIES OF THIS PLAN SHEET.

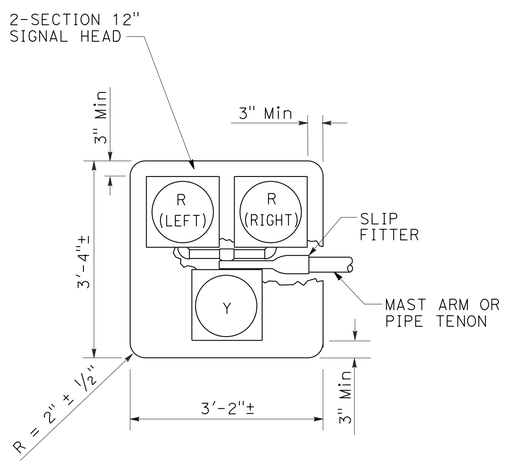

PEDESTRIAN HYBRID BEACON
DETAIL A
R: RED, Y: YELLOW

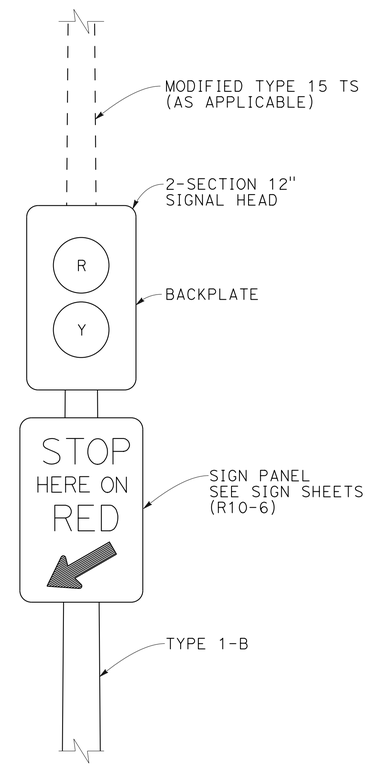

DETAIL B

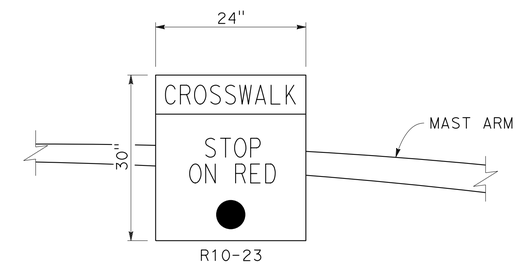

DETAIL C

ELECTRICAL DETAILS

NO SCALE

E-36

CALCULATED-DESIGNED BY	JESSIE CABUGAO	REVISED BY	EW
CHECKED BY	ELAINE WONG	DATE REVISED	1-27-16
FUNCTIONAL SUPERVISOR	BEHZAD GOLEMOHAMMADI		

STATE OF CALIFORNIA - DEPARTMENT OF TRANSPORTATION
Caltrans
ELECTRICAL

LAST REVISION 01-13-16 | DATE PLOTTED => 07-MAR-2016 TIME PLOTTED => 13:01

Dist	COUNTY	ROUTE	POST MILES TOTAL PROJECT	SHEET No.	TOTAL SHEETS
04	SM	82,84	1.4/25.1, 23.1/24.1	155	196

Elaine Wong 1-28-16
REGISTERED ELECTRICAL ENGINEER DATE

2-16-16
PLANS APPROVAL DATE

REGISTERED PROFESSIONAL ENGINEER Elaine T. Wong No. 13753 Exp. 6-30-17 ELECTRICAL STATE OF CALIFORNIA

THE STATE OF CALIFORNIA OR ITS OFFICERS OR AGENTS SHALL NOT BE RESPONSIBLE FOR THE ACCURACY OR COMPLETENESS OF SCANNED COPIES OF THIS PLAN SHEET.

SHEET No.	CONDUIT	CONDUCTOR	DLC	PULL BOX #5	PULL BOX #6	LOOPS TYPE A	LOOPS TYPE B	POLE TYPE 15	POLE TYPE 15TS	POLE TYPE 1-B	POLE TYPE 24A-4-100	POLE TYPE 19A-4-100	POLE TYPE III-AF	POLE TYPE 23-4-100	POLE MODIFY TYPE 15	POLE MODIFY TYPE 15 TS	POLE MODIFY 154-100	POLE MODIFY 23-4-100
	ft			EA														
E-2	350	800		5	1								1		4			
E-3	50	1000		1				3										
E-4	150	600		4	1			3					1					
E-5	400	900		7	1			4					1					
E-6	1200	4200	2300	10	2			1		2	2		1					
E-7	1200	5000	3500	17	1	27	7	1	1	3		2						
E-9	200	100		4	1								1		3			
E-10	270	700		4	1								1		3			
E-11	1100	4200	2400	10	2	6		1		2	2		1					
E-12	1050	4500	2300	10	2	6		1	2	2	2		1					
E-13	1000	4300	2300	10	2	6				2			1			1		2
E-14	950	4200	2400	10	2	6				2			1		1	1		2
E-15	920	4300	2400	10	2	6		1		2	2		1					
E-16	1000	4500	2300	10	2	6		1		2	2		1					
E-18	950	4200	2300	9	2	6		1		2	2		1					
E-20	780	3700	2400	8	2	5		1		2	2		1		1			2
E-21	230	800		4	1								1		3			
E-22	250	700		4	1			3					1					
E-23	280	800		4	1								1		3			
E-24	240	750		5	1			3					1					
E-25	200	600		4	1			3					1					
E-26	1000	4500	2500	10	1	6				2			1			1	2	
E-27	400	900		5	1								1		4			
E-28	230	800		4	1								1		3			
E-29	250	800		4	1								1		3			
E-30	800	4200	2400	9	2	6				2			1	2	1	2		
E-31	750	3800	1900	8	2	6		1	1	3			1	1	1	1		1
E-32	230	700		3	1			2					1					
E-33	770	4000	1900	9	2	4		1		2	2		1					
E-34	210	600		4	1			3					1					

ITEMS SHOWN ON THIS TABLE ARE NOT A SEPARATE PAY ITEM, FOR INFORMATION ONLY.

ELECTRICAL QUANTITIES

E-37

REVISED BY EW DATE REVISED 1-27-16
JESSIE CABUGAO ELAINE WONG
CALCULATED-DESIGNED BY CHECKED BY
FUNCTIONAL SUPERVISOR BEHZAD GOLEMOHAMMADI

STATE OF CALIFORNIA - DEPARTMENT OF TRANSPORTATION
Caltrans ELECTRICAL

LAST REVISION 12-22-15 DATE PLOTTED => 07-MAR-2016 TIME PLOTTED => 13:01

DIST	COUNTY	ROUTE	POST MILES TOTAL PROJECT	SHEET No	TOTAL SHEETS
04	SM	82,84	1.4/25.1, 23.1/24.1	156	196

REGISTERED CIVIL ENGINEER — DATE 1/12/16

2-16-16
PLANS APPROVAL DATE

REGISTERED PROFESSIONAL ENGINEER JEFFREY B. WOODY No. C41260 Exp. 3/31/17 CIVIL STATE OF CALIFORNIA

The State of California or its officers or agents shall not be responsible for the accuracy or completeness of electronic copies of this plan sheet.

To get to the Caltrans web site, go to: http://www.dot.ca.gov

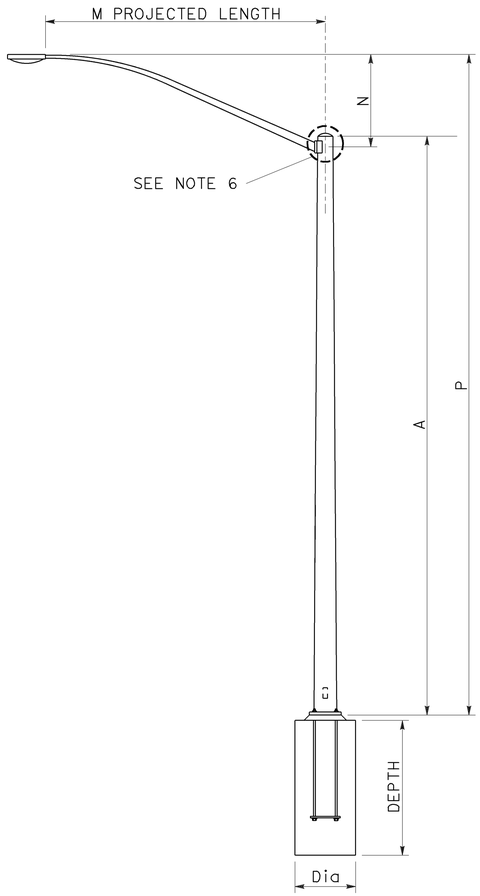

TYPE 15 (MODIFIED)

ELEVATION

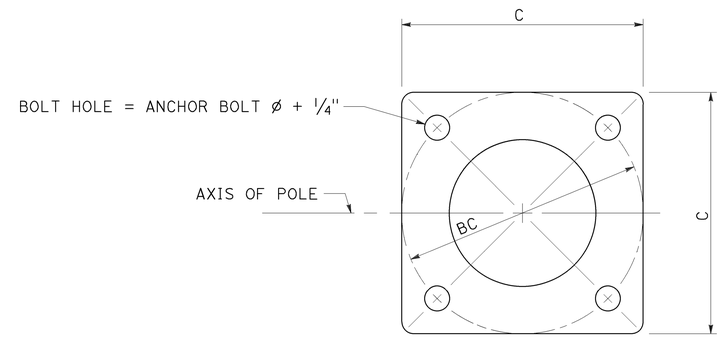

BASE PLATE

GENERAL NOTES

SPECIFICATIONS:

DESIGN: AASHTO Standard Specifications for Structural Supports for Highway Signs, Luminaires, and Traffic Signals, Sixth Edition.

LOADING:

Wind Loading (3 second gust) : 100 MPH

UNIT STRESSES:

Structural Steel: f_y = 55,000 psi (tapered steel tube)
f_y = 50,000 psi (unless otherwise noted)

Anchor bolts: f_y = 55,000 psi

Reinforced Concrete : f'_c = 3,600 psi
f_y = 60,000 psi

NOTES:

1. For pole location and details not shown, see "ROADWAY" plans.
2. For additional details and data for Type 15 Standard, see "2010 RSP ES-6A".
3. All steel must be galvanized after fabrication.
4. During pole erection, the post must be raked as necessary with the use of leveling nuts to provide a plumb pole axis.
5. For details not shown, see "2010 STANDARD PLANS" and "2010 REVISED STANDARD PLANS".
6. OD of pole is 4¾" at the centerline of the luminaire mast arm connection.

POLE TYPE	POLE DATA				BASE PLATE DATA				CIDH	
	A HEIGHT	Min OD BASE	Min OD TOP	WALL THICKNESS	C	BC = BOLT CIRCLE	THICKNESS	ANCHOR BOLT SIZE	DIAMETER	DEPTH
15 (MODIFIED)	23'-0"	8"	4 11/16"	0.1196"	1'-0"	1'-0"	2"	1" ø x 3'-0"	2'-6"	5'-0"

LUMINAIRE MAST ARM DATA				
M PROJECTED LENGTH	N RISE	Min OD AT POLE	NOMINAL THICKNESS	P TYPE 15
15'-0"	4'-9"±	4¼"	0.1196"	27'-3"±

THE CONTRACTOR MUST VERIFY ALL CONTROLLING FIELD DIMENSIONS BEFORE ORDERING OR FABRICATING ANY MATERIAL.

STANDARD PLAN SHEET No.
DETAIL No.

NO SCALE

BRANCH CHIEF JEFFREY B WOODY

	BY	CHECKED
DESIGN	A. GUTIERREZ	J. WOODY
DETAILS	M. CLEVERLEY	A. GUTIERREZ
QUANTITIES		

STATE OF CALIFORNIA
DEPARTMENT OF TRANSPORTATION

DIVISION OF ENGINEERING SERVICES
DESIGN AND TECHNICAL SERVICES
SPECIAL DESIGNS BRANCH A

BRIDGE NO.
POST MILE

TYPE 15 (MODIFIED)
POLE DETAILS

SES-1

(ENGLISH) SPECIAL DESIGNS BRANCH BORDER SHEET (REV. 7-1-09)

ORIGINAL SCALE IN INCHES FOR REDUCED PLANS 0 1 2 3

UNIT: 3619
PROJECT NUMBER & PHASE: 0415000086-1
CONTRACT NO.: 04-4G5514

DISREGARD PRINTS BEARING EARLIER REVISION DATES

REVISION DATES 1/8/16 1/21/16 1/28/16 1/29/16 SHEET OF

FILE => spec_des_br_prj_2015sd\ 04-4g5514_ses1.dgn

USERNAME => s114937 DATE PLOTTED => 21-JAN-2016 TIME PLOTTED => 15:15

DIST	COUNTY	ROUTE	POST MILES TOTAL PROJECT	SHEET No	TOTAL SHEETS
04	SM	82,84	1.4/25.1, 23.1/24.1	157	196

REGISTERED CIVIL ENGINEER 1/12/16 DATE

2-16-16
PLANS APPROVAL DATE

REGISTERED PROFESSIONAL ENGINEER JEFFREY B. WOODY No. C41260 Exp. 3/31/17 CIVIL STATE OF CALIFORNIA

The State of California or its officers or agents shall not be responsible for the accuracy or completeness of electronic copies of this plan sheet.

To get to the Caltrans web site, go to: http://www.dot.ca.gov

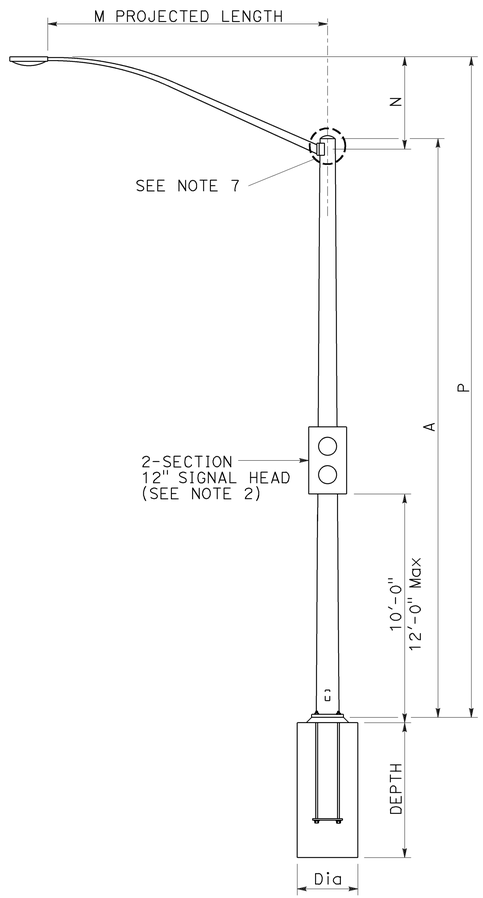

TYPE 15TS (MODIFIED)

ELEVATION

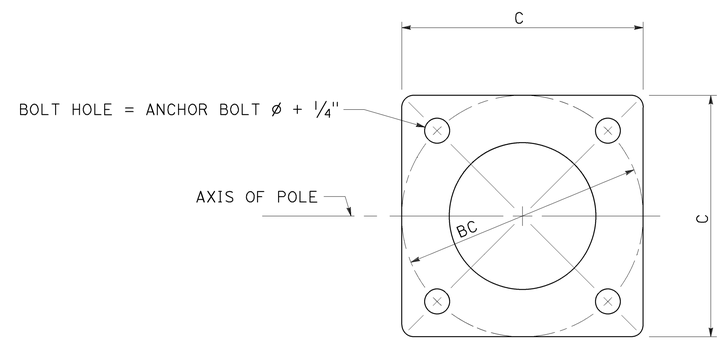

BASE PLATE

GENERAL NOTES

SPECIFICATIONS:

DESIGN: AASHTO Standard Specifications for Structural Supports for Highway Signs, Luminaires, and Traffic Signals, Sixth Edition.

LOADING:

Wind Loading (3 second gust) : 100 MPH

UNIT STRESSES:

Structural Steel: f_y = 55,000 psi (tapered steel tube)
f_y = 50,000 psi (unless otherwise noted)

Anchor bolts: f_y = 55,000 psi

Reinforced Concrete : f'_c = 3,600 psi
f_y = 60,000 psi

NOTES:

1. For pole location and details not shown, see "ROADWAY" plans.
2. For signal details, see "ELECTRICAL PLANS".
3. For additional details and data for Type 15TS Standard, see "2010 RSP ES-7A".
4. All steel must be galvanized after fabrication.
5. During pole erection, the post must be raked as necessary with the use of leveling nuts to provide a plumb pole axis.
6. For details not shown, see "2010 STANDARD PLANS" and "2010 REVISED STANDARD PLANS".
7. OD of pole is 4¾" at the centerline of the luminaire mast arm connection.

POLE TYPE	POLE DATA				BASE PLATE DATA				CIDH	
	A HEIGHT	Min OD BASE	Min OD TOP	WALL THICKNESS	C	BC = BOLT CIRCLE	THICKNESS	ANCHOR BOLT SIZE	DIAMETER	DEPTH
15TS (MODIFIED)	23'-0"	8"	4 11/16"	0.1793"	1'-1½"	1'-0"	2"	1½" Ø x 42"	2'-6"	7'-6"

LUMINAIRE MAST ARM DATA				
M PROJECTED LENGTH	N RISE	Min OD AT POLE	NOMINAL THICKNESS	P TYPE 15
15'-0"	4'-9"±	4¼"	0.1196"	27'-3"±

THE CONTRACTOR MUST VERIFY ALL CONTROLLING FIELD DIMENSIONS BEFORE ORDERING OR FABRICATING ANY MATERIAL.

STANDARD PLAN SHEET No.
DETAIL No.

NO SCALE

BRANCH CHIEF JEFFREY B WOODY

	BY	CHECKED
DESIGN	A. GUTIERREZ	J. WOODY
DETAILS	M. CLEVERLEY	A. GUTIERREZ
QUANTITIES		

STATE OF CALIFORNIA
DEPARTMENT OF TRANSPORTATION

DIVISION OF ENGINEERING SERVICES
DESIGN AND TECHNICAL SERVICES
SPECIAL DESIGNS BRANCH

A

BRIDGE NO.
POST MILE

TYPE 15TS (MODIFIED)
POLE DETAILS

SES-2

(ENGLISH) SPECIAL DESIGNS BRANCH BORDER SHEET (REV. 7-1-09)

ORIGINAL SCALE IN INCHES FOR REDUCED PLANS 0 1 2 3

UNIT: 3619
PROJECT NUMBER & PHASE: 0415000086-1
CONTRACT NO.: 04-4G5514

DISREGARD PRINTS BEARING EARLIER REVISION DATES

REVISION DATES 12/7/15 1/8/16 1/21/16 1/27/16

SHEET OF

FILE => spec_des_br_prj_2015sd\ 04-4g5514_ses2.dgn

USERNAME => s114337 DATE PLOTTED => 21-JAN-2016 TIME PLOTTED => 15:15

DIST	COUNTY	ROUTE	POST MILES TOTAL PROJECT	SHEET No	TOTAL SHEETS
04	SM	82,84	1.4/25.1, 23.1/24.1	158	196

REGISTERED CIVIL ENGINEER 1/12/16 DATE

2-16-16
PLANS APPROVAL DATE

REGISTERED PROFESSIONAL ENGINEER JEFFREY B. WOODY No. C41260 Exp. 3/31/17 CIVIL STATE OF CALIFORNIA

The State of California or its officers or agents shall not be responsible for the accuracy or completeness of electronic copies of this plan sheet.

To get to the Caltrans web site, go to: http://www.dot.ca.gov

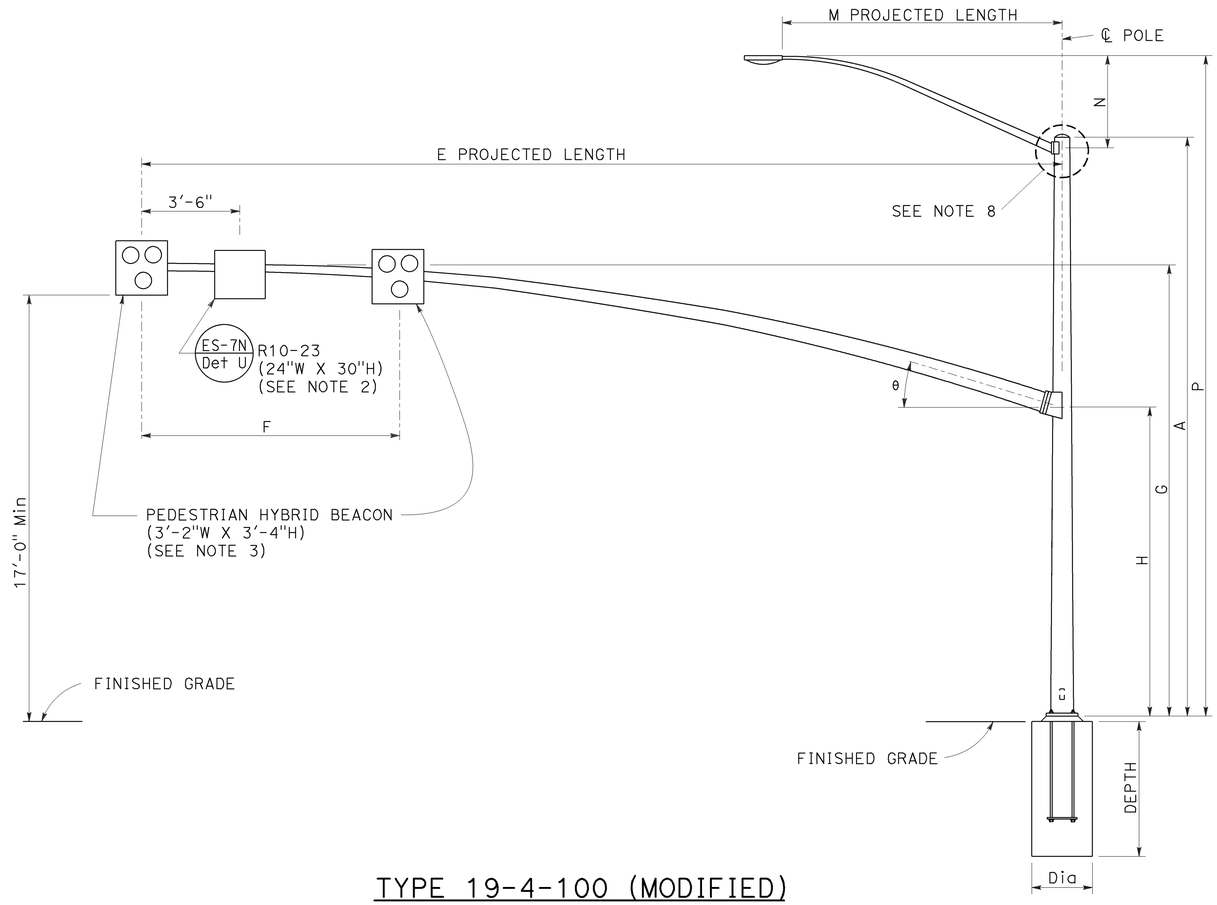

TYPE 19-4-100 (MODIFIED)

ELEVATION

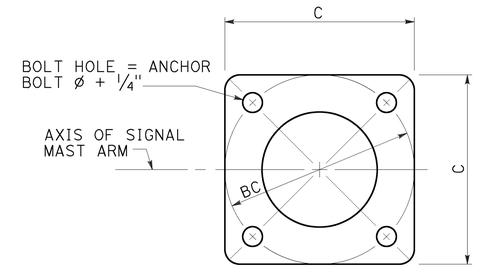

BASE PLATE

GENERAL NOTES

SPECIFICATIONS:

DESIGN: AASHTO Standard Specifications for Structural Supports for Highway Signs, Luminaires, and Traffic Signals, Sixth Edition.

LOADING:

Wind Loading (3 second gust) : 100 MPH

UNIT STRESSES:

Structural Steel: f_y = 55,000 psi (tapered steel tube)
f_y = 50,000 psi (unless otherwise noted)

Anchor bolts: f_y = 55,000 psi

Reinforced Concrete : f'_c = 3,600 psi
f_y = 60,000 psi

NOTES:

1. For pole location and details not shown, see "ROADWAY" plans.
2. For sign details, see "SIGN PLANS".
3. For Pedestrian Hybrid Beacon details, see "ELECTRICAL PLANS"
4. For additional details and data for Type 19-4-100 Standard, see "2010 RSP ES-7F".
5. All steel must be galvanized after fabrication.
6. During pole erection, the post must be raked as necessary with the use of leveling nuts to provide a plumb pole axis.
7. For details not shown, see "2010 STANDARD PLANS" and "2010 REVISED STANDARD PLANS".
8. OD of pole is 8½" at the centerline of the luminaire mast arm connection.

SIGNAL MAST ARM DATA											
E PROJECTED LENGTH	F Min SPACING	G MOUNTING HEIGHT	H	Min OD AT POLE	THICKNESS	I BOLT CIRCLE	HS CAP SCREWS	J PLATE SIZE	K MAST ARM ℙ THICKNESS	L POLE ℙ THICKNESS	θ
30'-0"	12'-0"	23'-0"±	16'-0"	8"	0.2391"	12"	1¼"-7NC-3"	1'-0"	1¼"	1½"	23°

LUMINAIRE MAST ARM DATA				
M PROJECTED LENGTH	N RISE	Min OD AT POLE	THICKNESS	P MOUNTING HEIGHT
15'-0"	4'-9"±	4¼"	0.1196"	29'-3"±

POLE TYPE	POLE DATA				BASE PLATE DATA				LUMINAIRE MAST ARM	SIGNAL MAST ARM	CIDH PILE FOUNDATION	
	A HEIGHT	Min OD		THICKNESS	C	BC = BOLT CIRCLE	THICKNESS	ANCHOR BOLT SIZE			DIAMETER	DEPTH
		BASE	TOP									
19-4-100 (MODIFIED)	25'-0"	12⅛"	8 7/16"	0.3125"	1'-7"	1'-5½"	3"	2" ø x 42"	15'-0"	30'-0"	3'-0"	11'-0"

THE CONTRACTOR MUST VERIFY ALL CONTROLLING FIELD DIMENSIONS BEFORE ORDERING OR FABRICATING ANY MATERIAL.

STANDARD PLAN SHEET No.
DETAIL No.

NO SCALE

BRANCH CHIEF JEFFREY B WOODY

	BY	CHECKED
DESIGN	A. GUTIERREZ	J. WOODY
DETAILS	M. CLEVERLEY	A. GUTIERREZ
QUANTITIES		

STATE OF CALIFORNIA
DEPARTMENT OF TRANSPORTATION

DIVISION OF ENGINEERING SERVICES
DESIGN AND TECHNICAL SERVICES
SPECIAL DESIGNS BRANCH A

BRIDGE NO.
POST MILE

TYPE 19-4-100 (MODIFIED)
POLE DETAILS

SES-3

(ENGLISH) SPECIAL DESIGNS BRANCH BORDER SHEET (REV. 7-1-09)

ORIGINAL SCALE IN INCHES FOR REDUCED PLANS 0 1 2 3

UNIT: 3619
PROJECT NUMBER & PHASE: 0415000086-1
CONTRACT NO.: 04-4G5514

DISREGARD PRINTS BEARING EARLIER REVISION DATES
REVISION DATES 1/21/16 1/21/16 1/21/16 1/21/16
SHEET OF

FILE => spec_des_br_prj_2015sd\ 04-4g5514_ses3.dgn

USERNAME => s114937 DATE PLOTTED => 21-JAN-2016 TIME PLOTTED => 15:25

DIST	COUNTY	ROUTE	POST MILES TOTAL PROJECT	SHEET No	TOTAL SHEETS
04	SM	82,84	1.4/25.1, 23.1/24.1	159	196

REGISTERED CIVIL ENGINEER 1/12/16 DATE

2-16-16
PLANS APPROVAL DATE

REGISTERED PROFESSIONAL ENGINEER JEFFREY B. WOODY No. C41260 Exp. 3/31/17 CIVIL STATE OF CALIFORNIA

The State of California or its officers or agents shall not be responsible for the accuracy or completeness of electronic copies of this plan sheet.

To get to the Caltrans web site, go to: http://www.dot.ca.gov

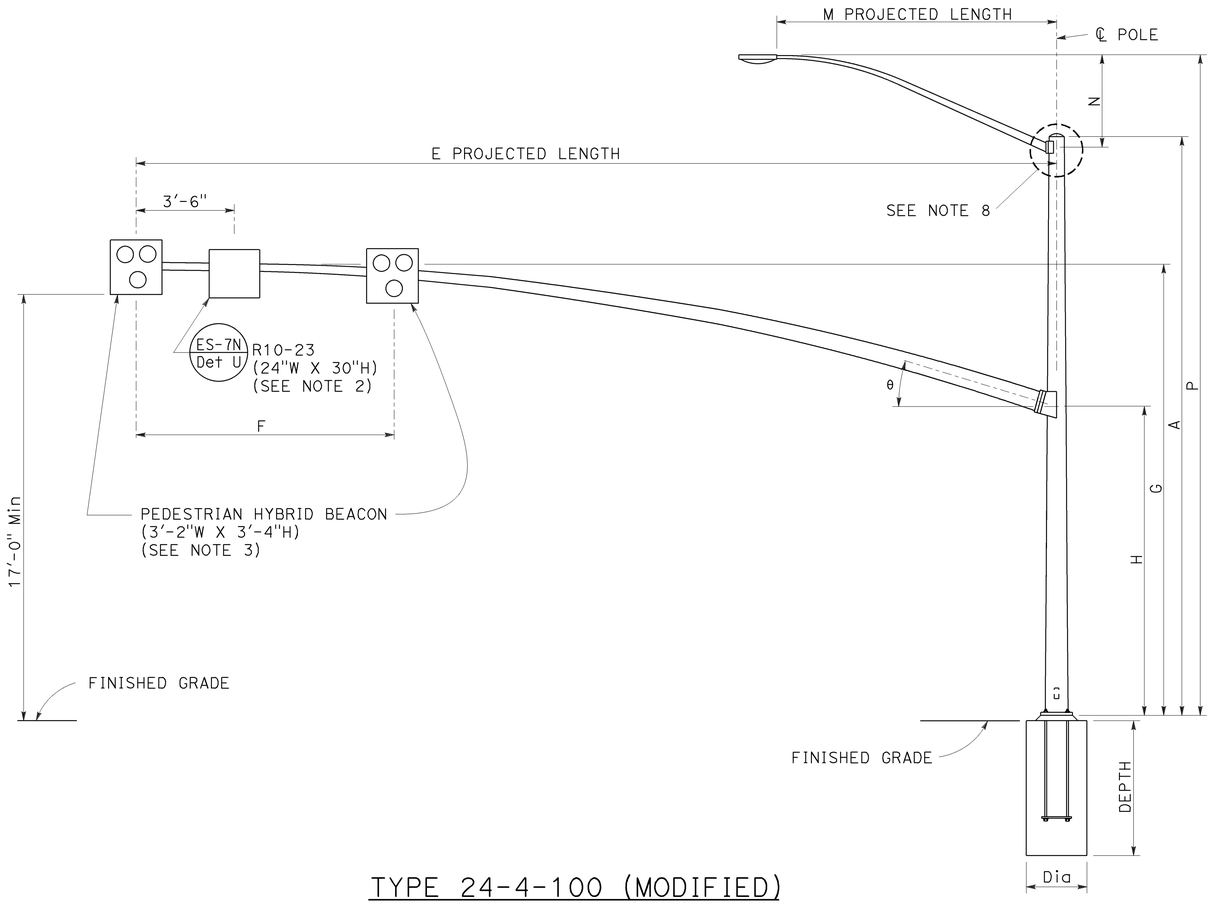

TYPE 24-4-100 (MODIFIED)

ELEVATION

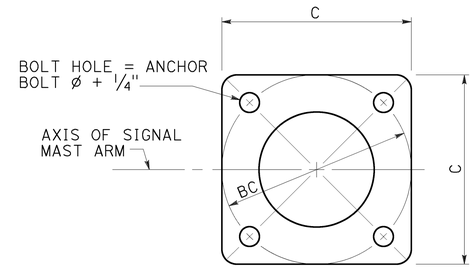

BASE PLATE

GENERAL NOTES

SPECIFICATIONS:

DESIGN: AASHTO Standard Specifications for Structural Supports for Highway Signs, Luminaires, and Traffic Signals, Sixth Edition.

LOADING:

Wind Loading (3 second gust) : 100 MPH

UNIT STRESSES:

Structural Steel: f_y = 55,000 psi (tapered steel tube)
f_y = 50,000 psi (unless otherwise noted)

Anchor bolts: f_y = 55,000 psi

Reinforced Concrete : f'_c = 3,600 psi
f_y = 60,000 psi

NOTES:

1. For pole location and details not shown, see "ROADWAY" plans.
2. For sign details, see "SIGN PLANS".
3. For Pedestrian Hybrid Beacon details, see "ELECTRICAL PLANS".
4. For additional details and data for Type 24-4-100 Standard, see "2010 RSP ES-7F".
5. All steel must be galvanized after fabrication.
6. During pole erection, the post must be raked as necessary with the use of leveling nuts to provide a plumb pole axis.
7. For details not shown, see "2010 STANDARD PLANS" and "2010 REVISED STANDARD PLANS".
8. OD of pole is 8½" at the centerline of the luminaire mast arm connection.

SIGNAL MAST ARM DATA

E PROJECTED LENGTH	F Min SPACING	G MOUNTING HEIGHT	H	Min OD AT POLE	THICKNESS	I BOLT CIRCLE	HS CAP SCREWS	J PLATE SIZE	K MAST ARM ℙ THICKNESS	L POLE ℙ THICKNESS	θ
35'-0"	14'-0"	23'-0"±	16'-0"	8 11/16"	0.2391"	13½"	1¼"-7NC-3"	1'-1½"	1½"	1¾"	21°

LUMINAIRE MAST ARM DATA

M PROJECTED LENGTH	N RISE	Min OD AT POLE	THICKNESS	P MOUNTING HEIGHT
15'-0"	4'-9"±	4¼"	0.1196"	29'-3"±

POLE TYPE	POLE DATA				BASE PLATE DATA				LUMINAIRE MAST ARM	SIGNAL MAST ARM	CIDH PILE FOUNDATION	
	A HEIGHT	Min OD BASE	Min OD TOP	THICKNESS	C	BC = BOLT CIRCLE	THICKNESS	ANCHOR BOLT SIZE			DIAMETER	DEPTH
24-4-100 (MODIFIED)	25'-0"	12⅛"	8 7/16"	0.3125"	1'-7"	1'-5½"	3"	2" ø x 42"	15'-0"	35'-0"	3'-0"	11'-0"

THE CONTRACTOR MUST VERIFY ALL CONTROLLING FIELD DIMENSIONS BEFORE ORDERING OR FABRICATING ANY MATERIAL.

STANDARD PLAN SHEET No.
DETAIL No.

NO SCALE

BRANCH CHIEF JEFFREY B WOODY

	BY	CHECKED
DESIGN	A. GUTIERREZ	J. WOODY
DETAILS	M. CLEVERLEY	A. GUTIERREZ
QUANTITIES		

STATE OF CALIFORNIA
DEPARTMENT OF TRANSPORTATION

DIVISION OF ENGINEERING SERVICES
DESIGN AND TECHNICAL SERVICES
SPECIAL DESIGNS BRANCH A

BRIDGE NO.
POST MILE

TYPE 24-4-100 (MODIFIED)
POLE DETAILS

SES-4

(ENGLISH) SPECIAL DESIGNS BRANCH BORDER SHEET (REV. 7-1-09)

ORIGINAL SCALE IN INCHES FOR REDUCED PLANS 0 1 2 3

UNIT: 3619
PROJECT NUMBER & PHASE: 0415000086-1
CONTRACT NO.: 04-4G5514

DISREGARD PRINTS BEARING EARLIER REVISION DATES
REVISION DATES 1/12/16 1/21/16 1/28/16 1/12/16
SHEET OF

FILE => spec_des_br_prj_2015sd\ 04-4g5514_ses4.dgn

USERNAME => s114937 DATE PLOTTED => 21-JAN-2016 TIME PLOTTED => 15:25

M

Maint	MAINTENANCE
Max	MAXIMUM
MB	METAL BEAM
MBB	METAL BEAM BARRIER
MBGR	METAL BEAM GUARD RAILING
Med	MEDIAN
MGS	MIDWEST GUARDRAIL SYSTEM
MH	MANHOLE
Min	MINIMUM
Misc	MISCELLANEOUS
Misc I & S	MISCELLANEOUS IRON AND STEEL
Mkr	MARKER
Mod	MODIFIED,
	MODIFY
Mon	MONUMENT
MP	METAL PLATE
MPGR	METAL PLATE GUARD RAILING
MR	MOVEMENT RATING
MSE	MECHANICALLY STABILIZED EMBANKMENT
Mt	MOUNTAIN, MOUNT
Mtl	MATERIAL
MVP	MAINTENANCE VEHICLE PULLOUT

N

N	NORTH
NB	NORTHBOUND
No.	NUMBER (MUST HAVE PERIOD)
Nos.	NUMBERS (MUST HAVE PERIOD)
NPS	NOMINAL PIPE SIZE
NS	NEAR SIDE
NSP	NEW STANDARD PLAN
NTS	NOT TO SCALE

O

Oblr	OBLITERATE
OC	OVERCROSSING
OD	OUTSIDE DIAMETER
OF	OUTSIDE FACE
OG	ORIGINAL GROUND
OGAC	OPEN GRADED ASPHALT CONCRETE
OGFC	OPEN GRADED FRICTION COURSE
OH	OVERHEAD
OHWM	ORDINARY HIGH WATER MARK
O-O	OUT TO OUT
Opp	OPPOSITE
OSD	OVERSIDE DRAIN

P

P	PAGE
PAP	PERFORATED ALUMINUM PIPE
PB	PULL BOX
PC	POINT OF CURVATURE,
	PRECAST
PCC	POINT OF COMPOUND CURVE,
	PORTLAND CEMENT CONCRETE
PCMS	PORTABLE CHANGEABLE MESSAGE SIGN
PCP	PERFORATED CONCRETE PIPE,
	PRESTRESSED CONCRETE PIPE
PCVC	POINT OF COMPOUND VERTICAL CURVE
PEC	PERMIT TO ENTER AND CONSTRUCT
Ped	PEDESTRIAN
Ped OC	PEDESTRIAN OVERCROSSING
Ped UC	PEDESTRIAN UNDERCROSSING
Perm Mtl	PERMEABLE MATERIAL

P continued

PG	PROFILE GRADE
PI	POINT OF INTERSECTION
PJP	PARTIAL JOINT PENETRATION
Pkwy	PARKWAY
ℙ,PL	PLATE
P/L	PROPERTY LINE
PM	POST MILE,
	TIME FROM NOON TO MIDNIGHT
PN	PAVING NOTCH
POC	POINT OF HORIZONTAL CURVE
POT	POINT OF TANGENT
POVC	POINT OF VERTICAL CURVE
PP	PIPE PILE,
	PLASTIC PIPE,
	POWER POLE
PPL	PREFORMED PERMEABLE LINER
PPP	PERFORATED PLASTIC PIPE
PRC	POINT OF REVERSE CURVE
PRF	PAVEMENT REINFORCING FABRIC
PRVC	POINT OF REVERSE VERTICAL CURVE
PS&E	PLANS, SPECIFICATIONS AND ESTIMATES
PS, P/S	PRESTRESSED
PSP	PERFORATED STEEL PIPE
PT	POINT OF TANGENCY
PVC	POLYVINYL CHLORIDE
Pvmt	PAVEMENT

Q

Qty	QUANTITY

R

R	RADIUS
R & D	REMOVE AND DISPOSE
R & S	REMOVE AND SALVAGE
R/C	RATE OF CHANGE
RCA	REINFORCED CONCRETE ARCH
RCB	REINFORCED CONCRETE BOX
RCP	REINFORCED CONCRETE PIPE
RCPA	REINFORCED CONCRETE PIPE ARCH
Rd	ROAD
Reinf	REINFORCED,
	REINFORCEMENT,
	REINFORCING
Rel	RELOCATE
Repl	REPLACEMENT
Ret	RETAINING
Rev	REVISED, REVISION
Rdwy	ROADWAY
RHMA	RUBBERIZED HOT MIX ASPHALT
Riv	RIVER
RM	ROAD-MIXED
RP	RADIUS POINT,
	REFERENCE POINT
RR	RAILROAD
RSP	ROCK SLOPE PROTECTION,
	REVISED STANDARD PLAN
Rt	RIGHT
Rte	ROUTE
RW	REDWOOD,
	RETAINING WALL
R/W	RIGHT OF WAY
Rwy	RAILWAY

S

S	SOUTH,
	SUPPLEMENT
SAE	STRUCTURE APPROACH EMBANKMENT
Salv	SALVAGE
SAPP	STRUCTURAL ALUMINUM PLATE PIPE
SB	SOUTHBOUND
SC	SAND CUSHION
SCSP	SLOTTED CORRUGATED STEEL PIPE
SD	STORM DRAIN
Sec	SECOND,
	SECTION
Sep	SEPARATION
SG	SUBGRADE
Shld	SHOULDER
Sht	SHEET
Sim	SIMILAR
℄	STATION LINE
SM	SELECTED MATERIAL
Spec	SPECIAL,
	SPECIFICATIONS
SPP	SLOTTED PLASTIC PIPE
SS	SLOPE STAKE
SSBM	STRAP AND SADDLE BRACKET METHOD
SSD	STRUCTURAL SECTION DRAIN
SSPA	STRUCTURAL STEEL PLATE ARCH
SSPP	STRUCTURAL STEEL PLATE PIPE
SSPPA	STRUCTURAL STEEL PLATE PIPE ARCH
SSRP	STEEL SPIRAL RIB PIPE
St	STREET
Sta	STATION
STBB	SINGLE THRIE BEAM BARRIER
Std	STANDARD
Str	STRUCTURE
Surf	SURFACING
SW	SIDEWALK,
	SOUND WALL
Swr	SEWER
Sym	SYMMETRICAL
S4S	SURFACE 4 SIDES

T

T	SEMI-TANGENT
Tan	TANGENT
TBB	THRIE BEAM BARRIER
Tbr	TIMBER
TC	TOP OF CURB
TCB	TRAFFIC CONTROL BOX
TCE	TEMPORARY CONSTRUCTION EASEMENT
Tel	TELEPHONE
Temp	TEMPORARY
TG	TOP OF GRADE
Tot	TOTAL
TP	TELEPHONE POLE
TPB	TREATED PERMEABLE BASE
TPM	TREATED PERMEABLE MATERIAL
Trans	TRANSITION

T continued

TS	TRANSVERSE,
	TRAFFIC SIGNAL,
	TUBULAR STEEL
Typ	TYPICAL

U

UC	UNDERCROSSING
UD	UNDERDRAIN
UG	UNDERGROUND
UON	UNLESS OTHERWISE NOTED
UP	UNDERPASS

V

V	VALVE,
	DESIGN SPEED
Var	VARIABLE,
	VARIES
VC	VERTICAL CURVE
VCP	VITRIFIED CLAY PIPE
Vert	VERTICAL
Via	VIADUCT
Vol	VOLUME

W

W	WEST,
	WIDTH
WB	WESTBOUND
WH	WEEP HOLE
WM	WIRE MESH
WS	WATER SURFACE
WSP	WELDED STEEL PIPE
Wt	WEIGHT
WV	WATER VALVE
WW	WINGWALL
WWLOL	WINGWALL LAYOUT LINE

X

X Sec	CROSS SECTION
Xing	CROSSING

Y

Yr	YEAR
Yrs	YEARS

Dist	COUNTY	ROUTE	POST MILES TOTAL PROJECT	SHEET No.	TOTAL SHEETS
04	SM	82,84	1.4/25.1; 23.1/24.1	160	196

Grace M. Tsushima
REGISTERED CIVIL ENGINEER

July 19, 2013
PLANS APPROVAL DATE

REGISTERED PROFESSIONAL ENGINEER
Grace M. Tsushima
No. C49814
Exp. 9-30-14
CIVIL
STATE OF CALIFORNIA

THE STATE OF CALIFORNIA OR ITS OFFICERS OR AGENTS SHALL NOT BE RESPONSIBLE FOR THE ACCURACY OR COMPLETENESS OF SCANNED COPIES OF THIS PLAN SHEET.

TO ACCOMPANY PLANS DATED 2-16-16

UNIT OF MEASUREMENT SYMBOLS:

Some of the symbols used in the project plan quantity tables and in the Bid Item List are:

TABLE A

SYMBOL USED	DEFINITIONS
ACRE	ACRE
CF	CUBIC FOOT
CY	CUBIC YARD
EA	EACH
GAL	GALLON
LB	POUND
LF	LINEAR FOOT
SQFT	SQUARE FOOT
SQYD	SQUARE YARD
STA	100 FEET
TAB	TABLET
TON	2,000 POUNDS

Some of the symbols used in the plans other than in the project plan quantity tables are:

TABLE B

SYMBOL USED	DEFINITIONS
ksi	KIPS PER SQUARE INCH
ksf	KIPS PER SQUARE FOOT
psi	POUNDS PER SQUARE INCH
psf	POUNDS PER SQUARE FOOT
lb/ft^3, pcf	POUNDS PER CUBIC FOOT
tsf	TONS PER SQUARE FOOT
mph, MPH *	MILES PER HOUR
ø	NOMINAL DIAMETER
oz	OUNCE
lb	POUND
kip	1,000 POUNDS
cal	CALORIE
ft	FOOT OR FEET
gal	GALLON

* For use on a sign panel only

STATE OF CALIFORNIA
DEPARTMENT OF TRANSPORTATION

ABBREVIATIONS (SHEET 2 OF 2)

NO SCALE

RSP A10B DATED JULY 19, 2013 SUPERSEDES STANDARD PLAN A10B DATED MAY 20, 2011 - PAGE 2 OF THE STANDARD PLANS BOOK DATED 2010.

REVISED STANDARD PLAN RSP A10B

2010 REVISED STANDARD PLAN RSP A10B

6-7-13

Dist	COUNTY	ROUTE	POST MILES TOTAL PROJECT	SHEET No.	TOTAL SHEETS
04	SM	82,84	1.4/25.1; 23.1/24.1	161	196

REGISTERED CIVIL ENGINEER

July 20, 2012
PLANS APPROVAL DATE

REGISTERED PROFESSIONAL ENGINEER
Roberta L. McLaughlin
No. C40375
Exp. 3-31-13
CIVIL
STATE OF CALIFORNIA

THE STATE OF CALIFORNIA OR ITS OFFICERS OR AGENTS SHALL NOT BE RESPONSIBLE FOR THE ACCURACY OR COMPLETENESS OF SCANNED COPIES OF THIS PLAN SHEET.

TO ACCOMPANY PLANS DATED 2-16-16

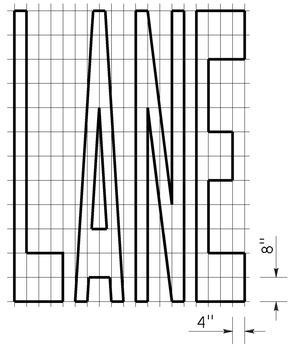

A=24 ft^2

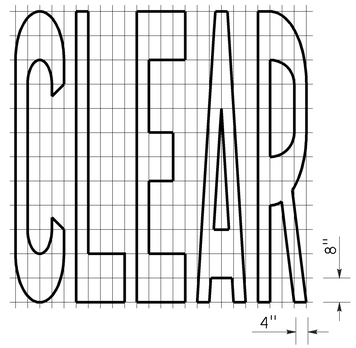

A=27 ft^2

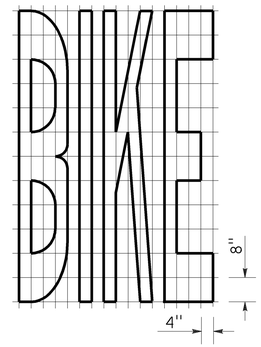

A=21 ft^2

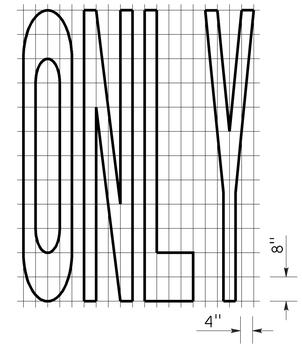

A=22 ft^2

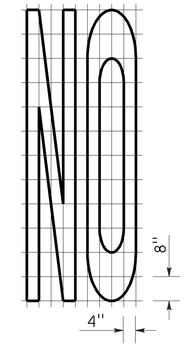

A=14 ft^2

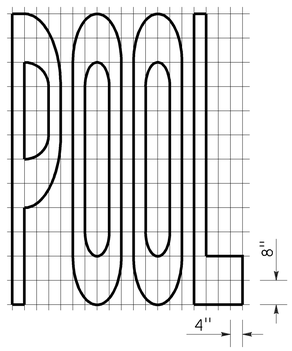

A=23 ft^2

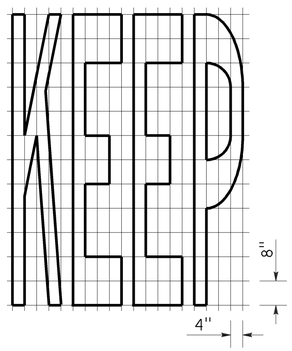

A=24 ft^2

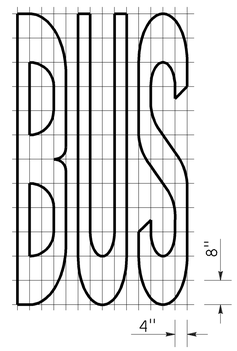

A=20 ft^2

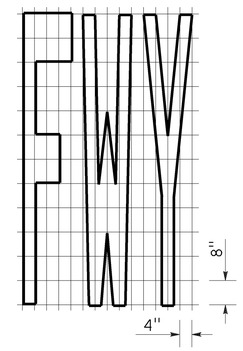

A=16 ft^2

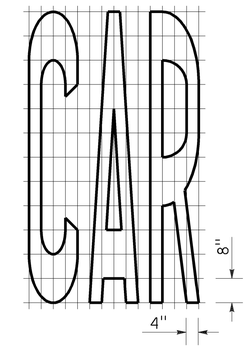

A=17 ft^2

WORD MARKINGS			
ITEM	ft^2	ITEM	ft^2
LANE	24	NO	14
POOL	23	BIKE	21
CAR	17	BUS	20
CLEAR	27	ONLY	22
KEEP	24	FWY	16

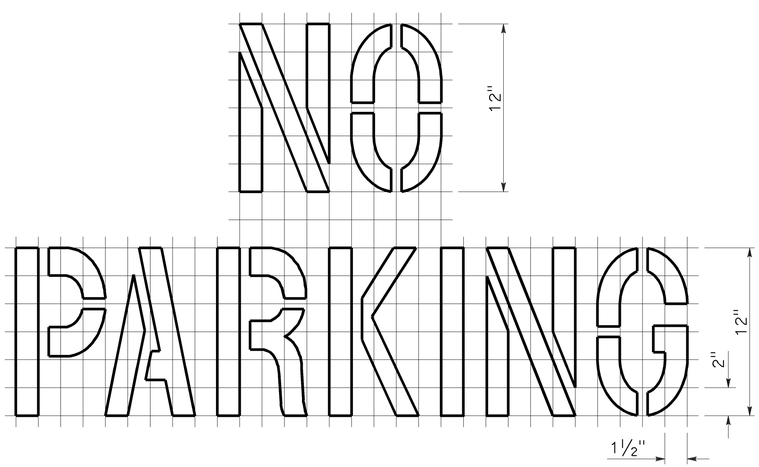

A=2 ft^2
See Notes 6 and 7

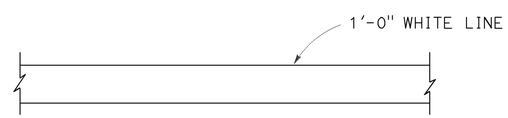

LIMIT LINE (STOP LINE)

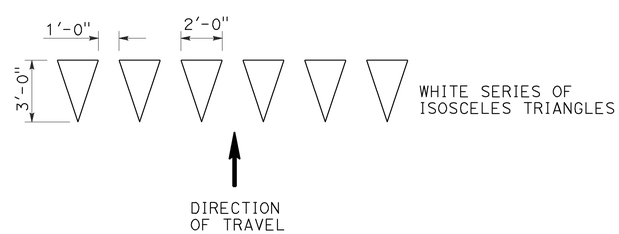

YIELD LINE

NOTES:

1. If a message consists of more than one word, it should read "UP", i.e., the first word should be nearest the driver.
2. The space between words should be at least four times the height of the characters for low speed roads, but not more than ten times the height of the characters. The space may be reduced appropriately where there is limited space because of local conditions.
3. Minor variations in dimensions may be accepted by the Engineer.
4. Portions of a letter, number or symbol may be separated by connecting segments not to exceed 2" in width.
5. The words "NO PARKING" pavement marking is to be used for parking facilities. For typical locations of markings, see Standard Plans A90A and A90B.
6. The words "NO PARKING", shall be painted in white letters no less than 1'-0" high on a contrasting background and located so that it is visible to traffic enforcement officials.

STATE OF CALIFORNIA
DEPARTMENT OF TRANSPORTATION

PAVEMENT MARKINGS WORDS, LIMIT AND YIELD LINES

NO SCALE

RSP A24E DATED JULY 20, 2012 SUPERSEDES STANDARD PLAN A24E
DATED MAY 20, 2011 - PAGE 17 OF THE STANDARD PLANS BOOK DATED 2010.

REVISED STANDARD PLAN RSP A24E

2010 REVISED STANDARD PLAN RSP A24E

6-12-12

Dist	COUNTY	ROUTE	POST MILES TOTAL PROJECT	SHEET No.	TOTAL SHEETS
04	SM	82,84	1.4/25.1; 23.1/24.1	162	196

REGISTERED CIVIL ENGINEER

July 19, 2013
PLANS APPROVAL DATE

REGISTERED PROFESSIONAL ENGINEER Michael Janzen No. 44788 Exp. 03-31-14 CIVIL STATE OF CALIFORNIA

THE STATE OF CALIFORNIA OR ITS OFFICERS OR AGENTS SHALL NOT BE RESPONSIBLE FOR THE ACCURACY OR COMPLETENESS OF SCANNED COPIES OF THIS PLAN SHEET.

TO ACCOMPANY PLANS DATED 2-16-16

2010 REVISED STANDARD PLAN RSP A87A

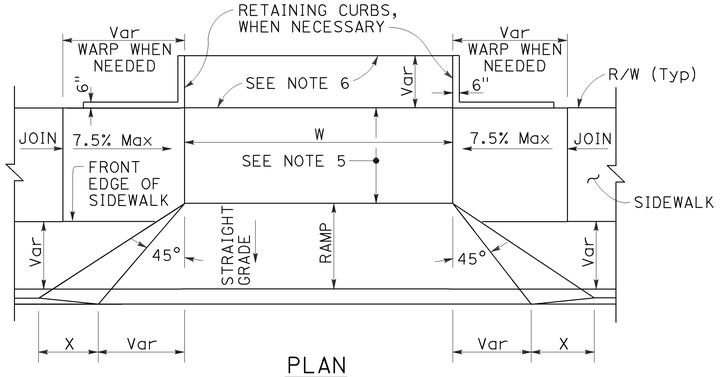

PLAN

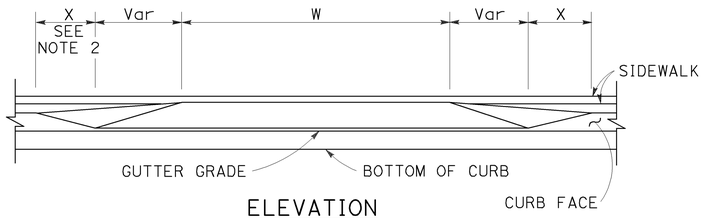

ELEVATION

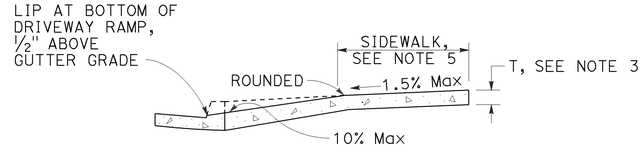

CASE A

Typical driveway, sidewalk not depressed

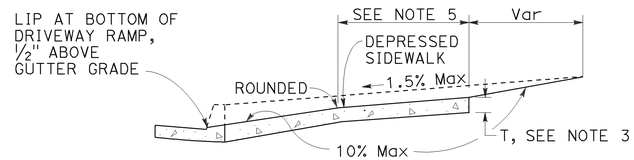

CASE B

Driveway with depressed sidewalk

SECTIONS

DRIVEWAYS

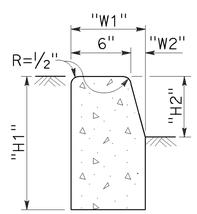

TYPE A1 CURBS

See Table A

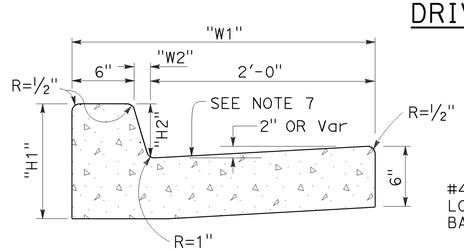

TYPE A2 CURBS

See Table A

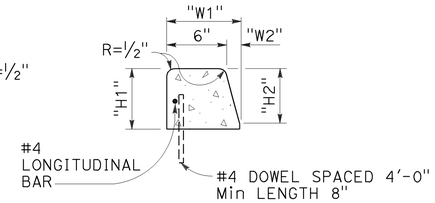

TYPE A3 CURBS

Superimposed on existing pavement
See Table A

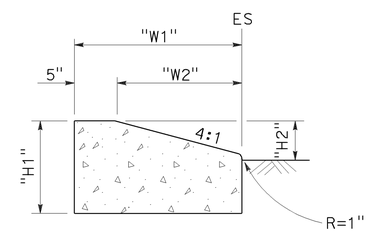

TYPE D CURBS

See Table A

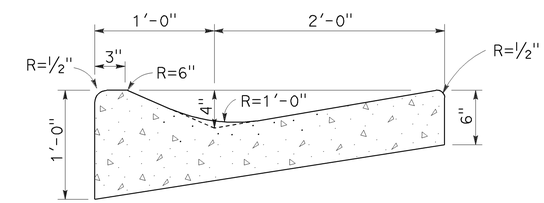

TYPE E CURB

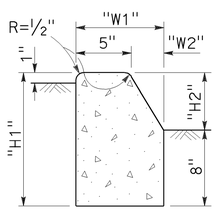

TYPE B1 CURBS

See Table A

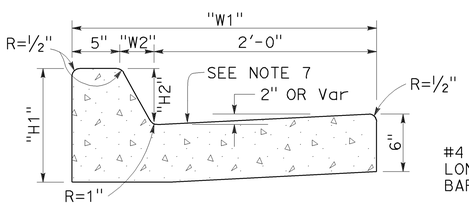

TYPE B2 CURBS

See Table A

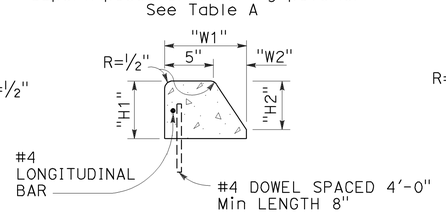

TYPE B3 CURBS

Superimposed on existing pavement
See Table A

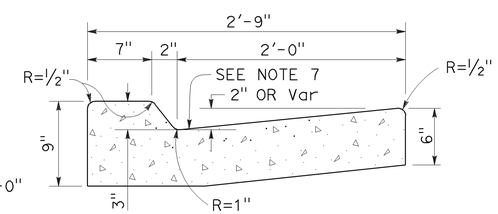

TYPE B4 CURBS

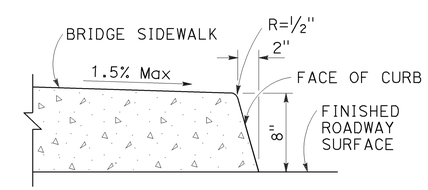

TYPE H CURB

On Bridges

CURBS

TABLE A

CURB TYPE	DIMENSIONS			
	"H1"	"H2"	"W1"	"W2"
A1-6	1'-2"	6"	7½"	1½"
A1-8	1'-4"	8"	8"	2"
A2-6	1'-0"	6"	2'-7½"	1½"
A2-8	1'-2"	8"	2'-8"	2"
A3-6	6"	5"	7¼"	1¼"
A3-8	8"	7"	7¾"	1¾"
B1-4	1'-0"	4"	7½"	2½"
B1-6	1'-2"	6"	9"	4"
B2-4	10"	4"	2'-7½"	2½"
B2-6	1'-0"	6"	2'-9"	4"
B3-4	4"	3"	7"	2"
B3-6	6"	5"	8½"	3½"
D-4	10"	4"	1'-6"	1'-1"
D-6	1'-0"	6"	2'-2"	1'-9"

CURB QUANTITIES

TYPE	CUBIC YARDS PER LINEAR FOOT
A1-6	0.02585
A1-8	0.03084
A2-6	0.05903
A2-8	0.06379
A3-6	0.01036
A3-8	0.01435
B1-4	0.02185
B1-6	0.02930
B2-4	0.05515
B2-6	0.06171
B3-4	0.00641
B3-6	0.01074
B4	0.05709
D-4	0.04083
D-6	0.06804
E	0.06661

NOTES:

1. Case A driveway section typically applies.
2. X=3'-0" except for curb heights over 10" where 4:1 slopes shall be used on curb slope.
3. Sidewalk and ramp thickness "T" at driveway shall be 4" for residental and 6" for commercial.
4. Difference in slope of the driveway ramp and the slope of a line between the gutter and a point on the roadway 5'-0" from gutter line shall not exceed 15%. Reduce driveway ramp slope, not gutter slope, where required.
5. Minimum width of clear passageway for sidewalk shall be 4'-2".
6. Retaining curbs and acquisition of construction easement may be necessary for narrow sidewalks or curb heights in excess of 6".
7. Across the pedestrian route at curb ramp locations, the gutter pan slope shall not exceed 1" of depth for each 2'-0" of width.

STATE OF CALIFORNIA
DEPARTMENT OF TRANSPORTATION

CURBS AND DRIVEWAYS

NO SCALE

RSP A87A DATED JULY 19, 2013 SUPERSEDES STANDARD PLAN A87A
DATED MAY 20, 2011 - PAGE 119 OF THE STANDARD PLANS BOOK DATED 2010.

REVISED STANDARD PLAN RSP A87A

Dist	COUNTY	ROUTE	POST MILES TOTAL PROJECT	SHEET No.	TOTAL SHEETS
04	SM	82,84	1.4/25.1, 23.1/24.1	163	196

REGISTERED CIVIL ENGINEER

July 3, 2015
PLANS APPROVAL DATE

REGISTERED PROFESSIONAL ENGINEER Hector David Cordova No. C41957 Exp. 3-31-16 CIVIL STATE OF CALIFORNIA

THE STATE OF CALIFORNIA OR ITS OFFICERS OR AGENTS SHALL NOT BE RESPONSIBLE FOR THE ACCURACY OR COMPLETENESS OF SCANNED COPIES OF THIS PLAN SHEET.

TO ACCOMPANY PLANS DATED 2-16-16

2010 REVISED STANDARD PLAN RSP A88A

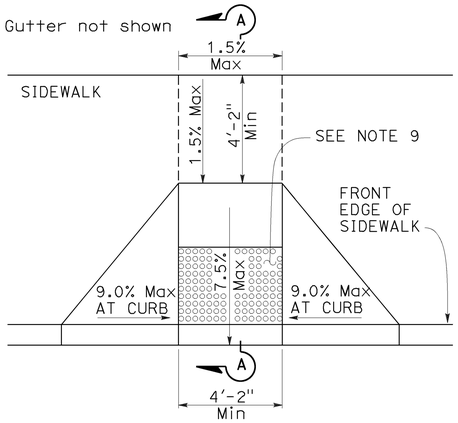

CASE A

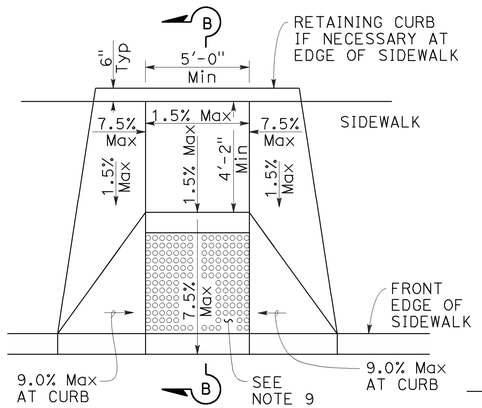

CASE B

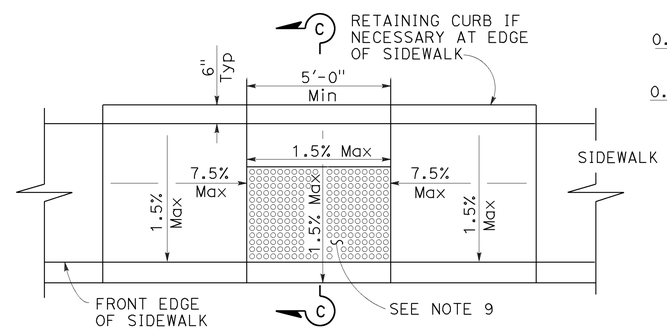

CASE C

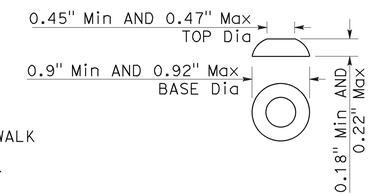

RAISED TRUNCATED DOME

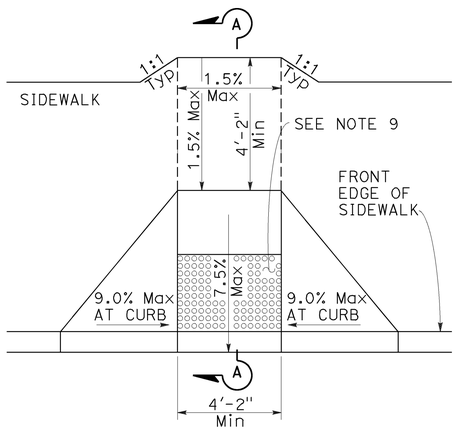

CASE D

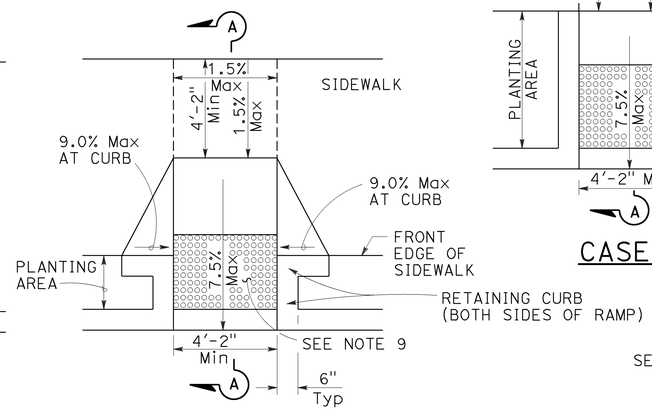

CASE E

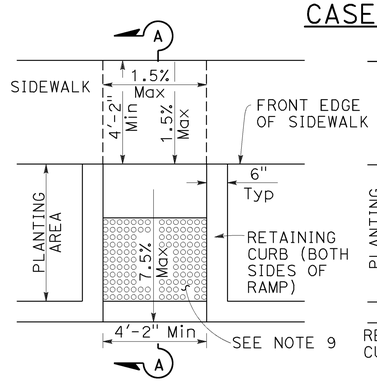

CASE F

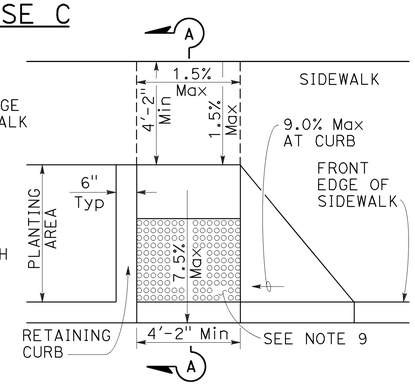

CASE G
See Note 4

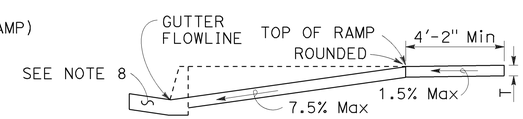

SECTION A-A

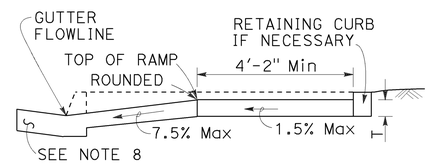

SECTION B-B
Depress entire sidewalk as required

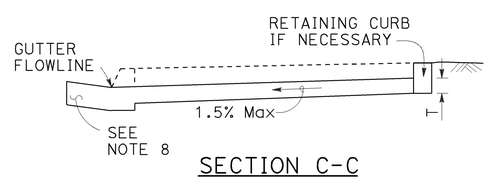

SECTION C-C

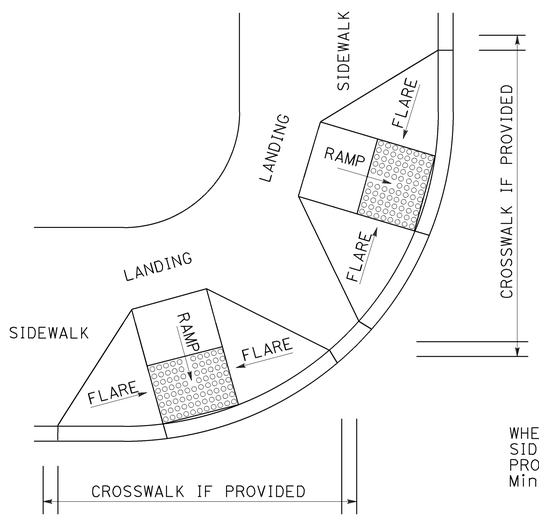

DETAIL A

TYPICAL TWO-RAMP CORNER INSTALLATION

See Note 1

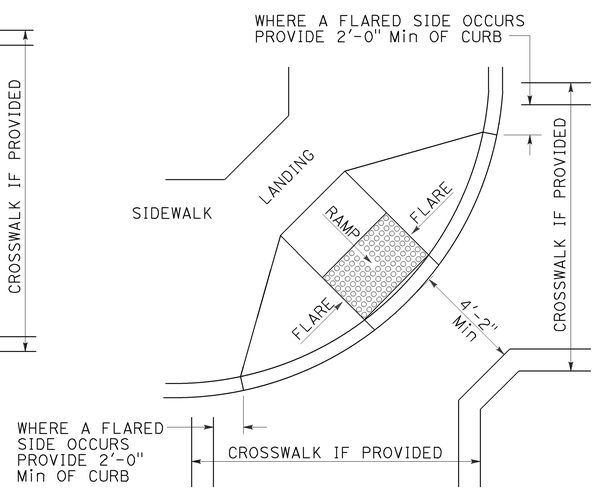

DETAIL B

TYPICAL ONE-RAMP CORNER INSTALLATION

See Notes 1 and 3

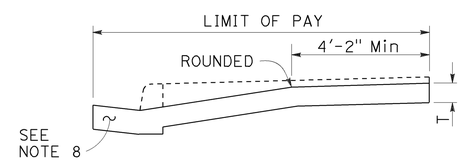

RETROFIT PAY LIMITS

Existing curb and sidewalk

NOTES:

1. As site conditions dictate, Case A through Case G curb ramps may be used for corner installations similar to those shown in Detail A and Detail B. The case of curb ramps used in Detail A do not have to be the same. Case A through Case G curb ramps also may be used at mid block locations, as site conditions dictate.
2. If distance from curb to back of sidewalk is too short to accommodate ramp and 4'-2" platform (landing) as shown in Case A, the sidewalk may be depressed longitudinally as in Case B, or C or may be widened as in Case D.
3. When ramp is located in center of curb return, crosswalk configuration must be similar to that shown for Detail B.
4. As site conditions dictate, the retaining curb side and the flared side of the Case G ramp shall be constructed in reversed position.
5. If located on a curve, the sides of the ramp need not be parallel, but the minimum width of the ramp shall be 4'-2".
6. Side slope of ramp flares vary uniformly from a maximum of 9.0% at curb to conform with longitudinal sidewalk slope adjacent to top of the ramp, except in Case C and Case F.
7. Transitions from ramps and landing to walks, gutters or streets shall be flush (no lip) and free of abrupt changes.
8. Counter slopes of adjoining gutters and road surfaces immediately adjacent to and within 24 inches of the curb ramp shall not be steeper than 1:20 (5.0%). Gutter pan slope shall not exceed 1" of depth for each 2'-0" of width.
9. Curb ramps shall have a detectable warning surface that extends the full width and 3'-0" depth of the ramp. A 4'-0" wide detectable warning surface may be used on a 4'-2" wide curb ramp. Detectable Warning Surfaces shall conform to the requirements in the Standard Specifications.
10. Sidewalk and ramp thickness, "T", shall be 3½" minimum.
11. Utility pull boxes, manholes, vaults and all other utility facilities within the boundaries of the curb ramp will be relocated or adjusted to grade by the owner prior to, or in conjunction with, curb ramp construction.
12. Detectable warning surface may have to be cut to allow removal of utility covers while maintaining full detectable warning width and depth.

RAISED TRUNCATED DOME PATTERN (IN-LINE)

DETECTABLE WARNING SURFACE

See Note 9

STATE OF CALIFORNIA
DEPARTMENT OF TRANSPORTATION

CURB RAMP DETAILS

NO SCALE

RSP A88A DATED JULY 3, 2015 SUPERSEDES RSP A88A DATED MARCH 21, 2014 AND RSP A88A DATED JULY 19, 2013 AND STANDARD PLAN A88A DATED MAY 20, 2011 - PAGE 121 OF THE STANDARD PLANS BOOK DATED 2010.

REVISED STANDARD PLAN RSP A88A

6-30-15

Dist	COUNTY	ROUTE	POST MILES TOTAL PROJECT	SHEET No.	TOTAL SHEETS
04	SM	82,84	1.4/25.1; 23.1/24.1	164	196

REGISTERED CIVIL ENGINEER

July 3, 2015
PLANS APPROVAL DATE

REGISTERED PROFESSIONAL ENGINEER Hector David Cordova No. C41957 Exp. 3-31-16 CIVIL STATE OF CALIFORNIA

THE STATE OF CALIFORNIA OR ITS OFFICERS OR AGENTS SHALL NOT BE RESPONSIBLE FOR THE ACCURACY OR COMPLETENESS OF SCANNED COPIES OF THIS PLAN SHEET.

TO ACCOMPANY PLANS DATED 2-16-16

Gutter not shown

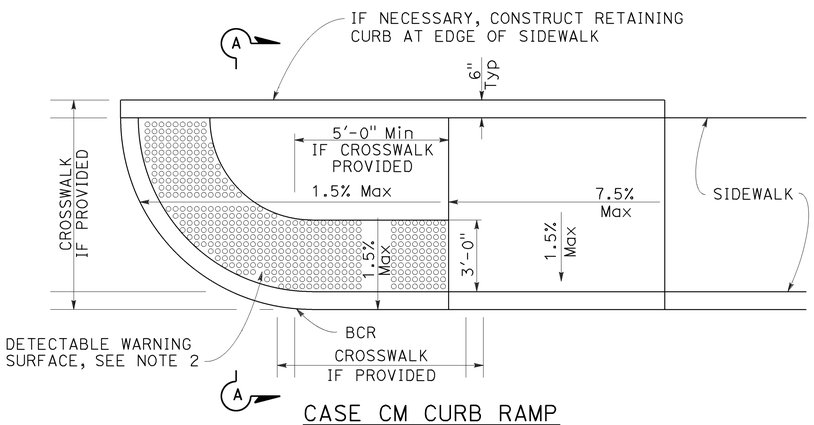

CASE CM CURB RAMP

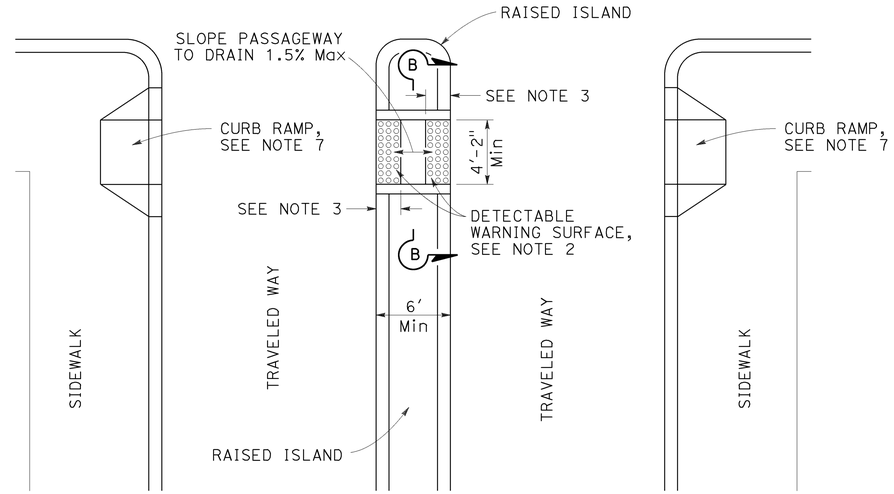

TYPE A PASSAGEWAY

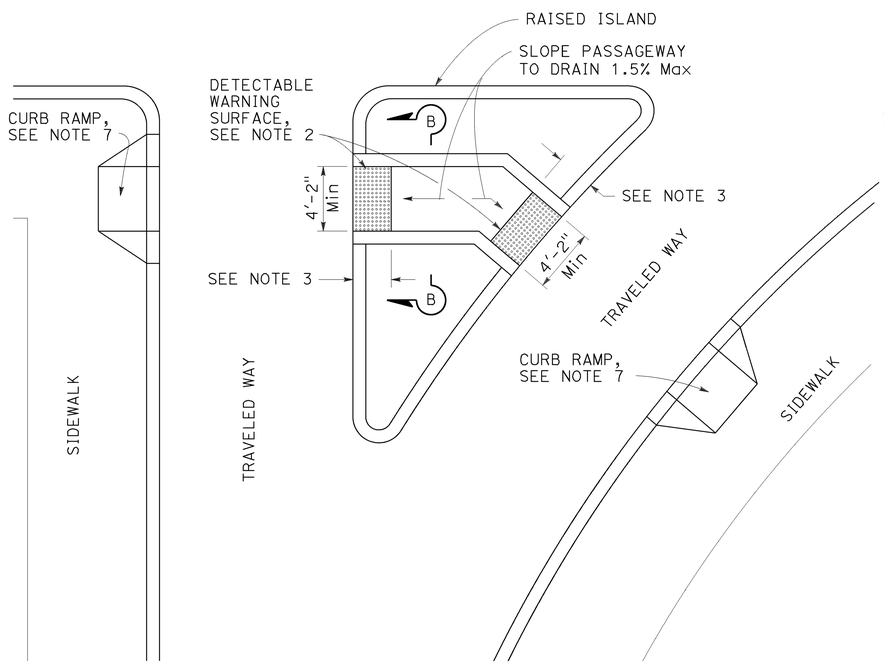

TYPE B PASSAGEWAY

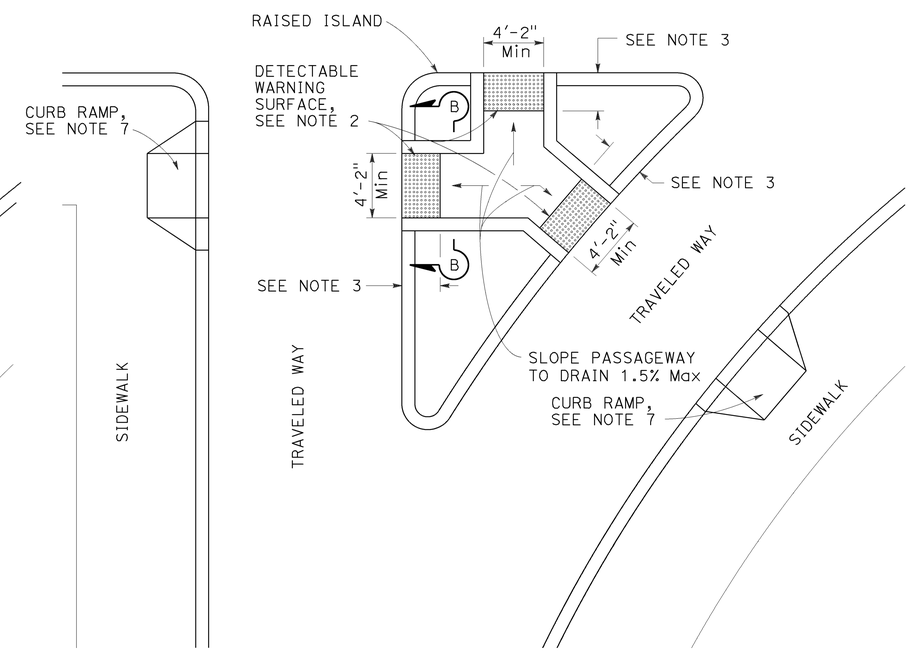

TYPE C PASSAGEWAY

NOTES:

1. Sidewalk, ramp and passageway thickness, "T", shall be 3½" minimum.
2. For details of detectable warning surfaces, see Revised Standard Plan RSP A88A.
3. Where an island passageway length is greater than or equal to 6'-0", but less than 8'-0", each detectable warning surface shall extend the full width and 2'-0" depth of the passageway length. Where an island passageway length is greater than or equal to 8'-0", each detectable warning surface shall extend the full width and 3'-0" depth of the passageway length. A 4'-0" wide detectable warning surface may be used on a 4'-2" wide island passageway.
4. Transitions from ramps to walks, gutters or streets shall be flush (no lip) and free of abrupt changes.
5. Utility pull boxes, manholes, vaults and all other utility facilities within the boundaries of the curb ramp will be relocated or adjusted to grade by the owner prior to, or in conjunction with, curb ramp construction.
6. Detectable warning surface may have to be cut to allow removal of utility covers while maintaining full detectable warning width and depth.
7. For additional curb ramp details, see Revised Standard Plan RSP A88A.

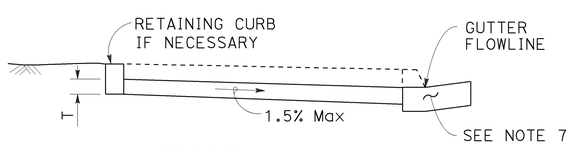

SECTION A-A

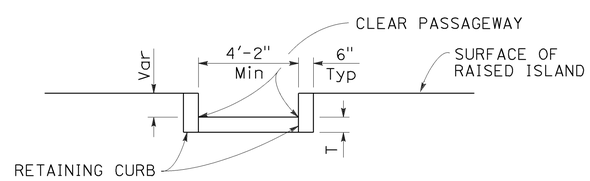

SECTION B-B

STATE OF CALIFORNIA
DEPARTMENT OF TRANSPORTATION

CURB RAMP AND ISLAND PASSAGEWAY DETAILS

NO SCALE

RSP A88B DATED JULY 3, 2015 SUPERSEDES RSP A88B DATED MARCH 21, 2014 AND RSP A88B DATED JULY 19, 2013 AND STANDARD PLAN A88B DATED MAY 20, 2011 - PAGE 122 OF THE STANDARD PLANS BOOK DATED 2010.

REVISED STANDARD PLAN RSP A88B

2010 REVISED STANDARD PLAN RSP A88B

4-28-15

TO ACCOMPANY PLANS DATED 2-16-16

Dist	COUNTY	ROUTE	POST MILES TOTAL PROJECT	SHEET No.	TOTAL SHEETS
04	SM	82,84	1.4/25.1; 23.1/24.1	165	196

REGISTERED CIVIL ENGINEER

October 19, 2012
PLANS APPROVAL DATE

REGISTERED PROFESSIONAL ENGINEER Glenn DeCou No. C34547 Exp. 9-30-13 CIVIL STATE OF CALIFORNIA

THE STATE OF CALIFORNIA OR ITS OFFICERS OR AGENTS SHALL NOT BE RESPONSIBLE FOR THE ACCURACY OR COMPLETENESS OF SCANNED COPIES OF THIS PLAN SHEET.

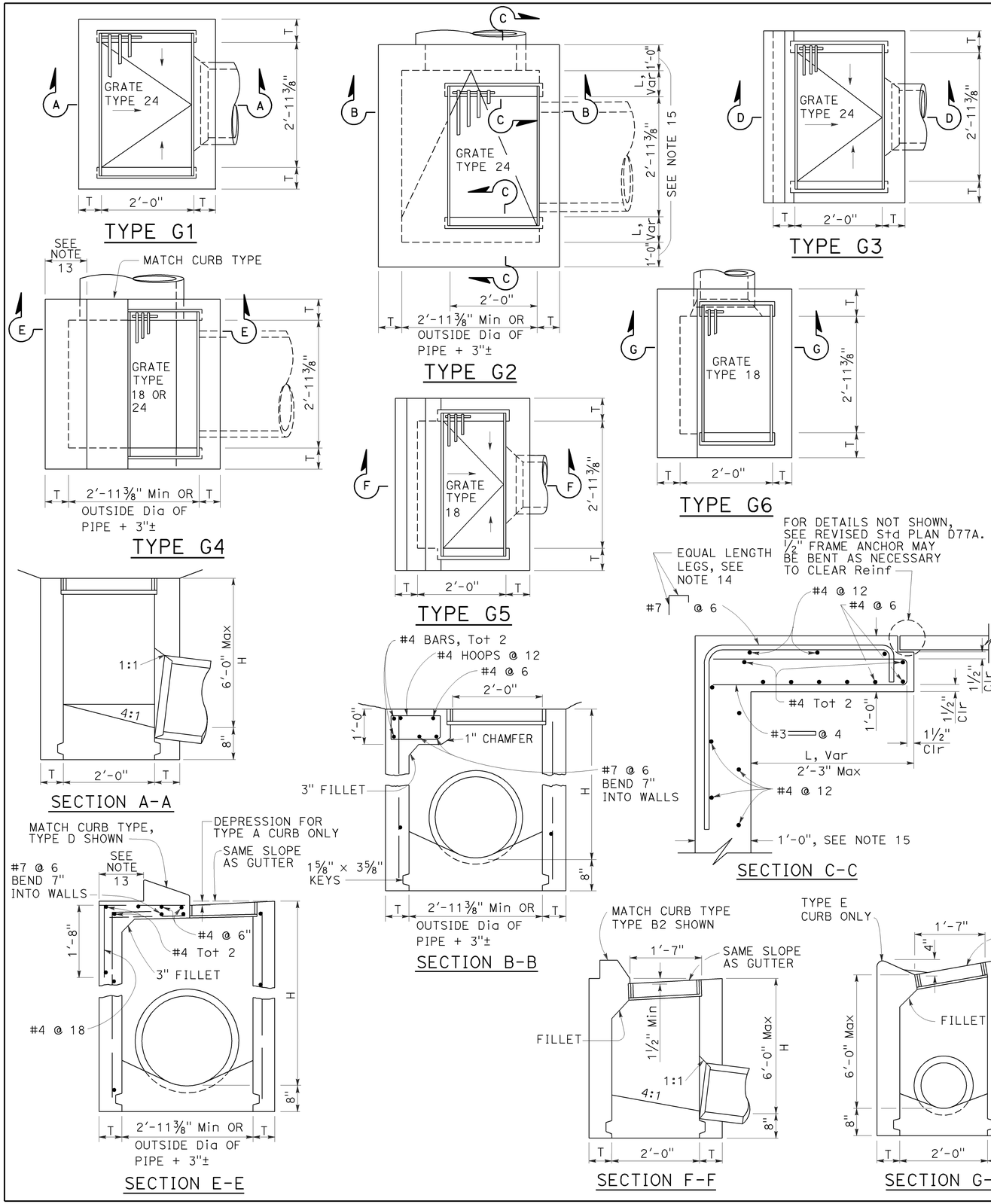

NOTES:

1. "H" is the difference in elevation between the outlet pipe flow line and the normal gutter grade line undepressed.
2. For "T" wall thickness, see Table A below.
3. Wall reinforcing not required when "H" is 8'-0" or less and the unsupported width or length is 7'-0" or less. Walls exceeding these limits shall be reinforced with #4 bars @ 1'-6" ± centers placed 1½" clear to inside of box unless otherwise shown.
4. Inlet bottom reinforcing not required. See Standard Plan D74C for alternative reinforced bottom and alternative half round bottom.
5. Steps-None required where "H" is less than 2'-6". Where "H" is 2'-6" or more, install steps with lowest rung 1'-0" above the floor and highest rung not more than 6" below top of inlet. The distance between steps shall not exceed 1'-0" and shall be uniform throughout the length of the wall. Place steps in the wall without an opening. Steps inserts may be substituted for the bar steps. Step inserts shall comply with State Industrial Safety requirements. See Standard Plan D74C for step details.
6. Details shown apply to both metal and concrete pipe.
7. Pipe(s) can be placed in any wall.
8. Curb section shall match adjacent curb.
9. Basin floors shall have wood trowel finish and a minimum slope of 12:3 from all directions toward outlet pipe.
10. Set inlet so that grate bars are parallel to direction of principal surface flow.
11. See Revised Standard Plans D77A and D77B for grate and frame details and weights of miscellaneous iron and steel.
12. See Standard Plan D78A for gutter depression details.
13. This dimenison will vary with different grates, curbs types, box width and wall thickness.
14. Bar may be rotated as necessary to clear opening. Where "L" is 6" or less, bar may be omitted.
15. Where "L" is 6" or less, wall thickness shall be as shown in Table A.
16. Cast-in-place inlets to be formed around all pipes/stubs intersecting the inlet, and concrete poured in one continuous operation. Precast inlets shall have mortared connections conforming to details for Type GCP Inlet shown on Standard Plan D75B. See Standard Specifications for mortar composition.

TABLE A

CONCRETE QUANTITIES				
TYPE	H=3'-0" TO 8'-0" (T=6")		H=8'-1" TO 20'-0" (T=8")	
	H=3'-0" (CY)	ADDITIONAL PCC PER FOOT (CY)	H=8'-1" (CY)	ADDITIONAL PCC PER FOOT (CY)
G-1	0.95	0.220	See Note A	SEE NOTE A
G-2*	1.31	0.255	3.50	0.357
G-3	1.03	0.220	See Note A	SEE NOTE A
G-4* (TYPE 24)	1.27	0.255	3.48	0.357
G-4* (TYPE 18)	1.30	0.255	3.50	0.357
G-5	1.02	0.220	SEE NOTE A	SEE NOTE A
G-6	1.04	0.220	SEE NOTE A	SEE NOTE A

TABLE BASED ON 8" FLOOR SLAB. NO DEDUCTIONS ARE TO BE MADE TO THESE QUANTITIES BECAUSE OF PIPE OPENINGS, DIFFERENT FLOOR ALTERNATIVES OR DIFFERENT CURB TYPES. * QUANTITIES FOR TYPE G-2 AND G-4 INLETS BASED ON THE MINIMUM INTERIOR DIMENSIONS.

NOTE A:

Maximum allowable height 6'-0".

STATE OF CALIFORNIA
DEPARTMENT OF TRANSPORTATION

DRAINAGE INLETS

NO SCALE

RSP D73 DATED OCTOBER 19, 2012 SUPERSEDES STANDARD PLAN D73 DATED MAY 20, 2011 - PAGE 156 OF THE STANDARD PLANS BOOK DATED 2010.

REVISED STANDARD PLAN RSP D73

2010 REVISED STANDARD PLAN RSP D73

7-19-12

Dist	COUNTY	ROUTE	POST MILES TOTAL PROJECT	SHEET No.	TOTAL SHEETS
04	SM	82,84	1.4/25.1; 23.1/24.1	166	196

REGISTERED CIVIL ENGINEER

October 30, 2015
PLANS APPROVAL DATE

REGISTERED PROFESSIONAL ENGINEER Carl M. Duan No. C59976 Exp. 6-30-16 CIVIL STATE OF CALIFORNIA

THE STATE OF CALIFORNIA OR ITS OFFICERS OR AGENTS SHALL NOT BE RESPONSIBLE FOR THE ACCURACY OR COMPLETENESS OF SCANNED COPIES OF THIS PLAN SHEET.

TO ACCOMPANY PLANS DATED 2-16-16

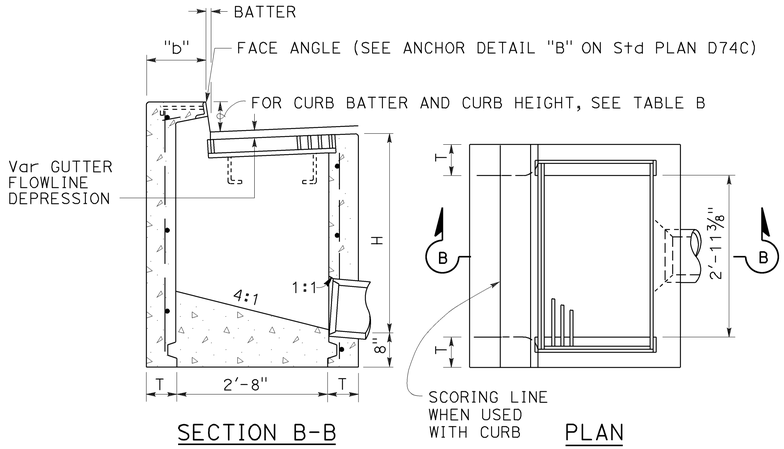

SECTION B-B PLAN

TYPE GO

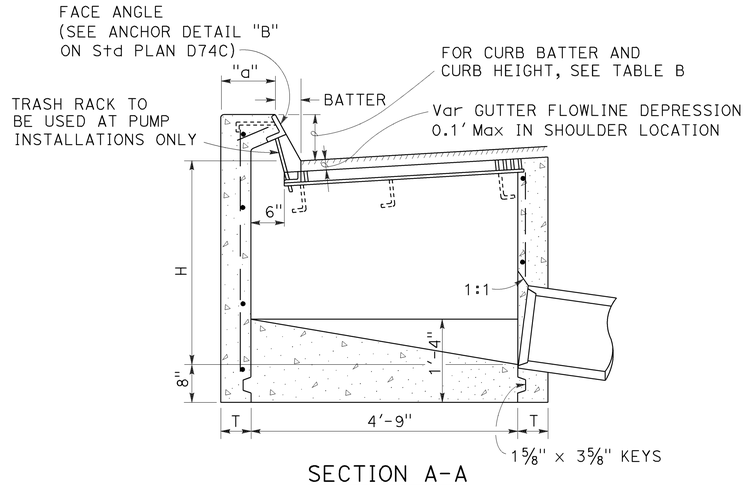

SECTION A-A

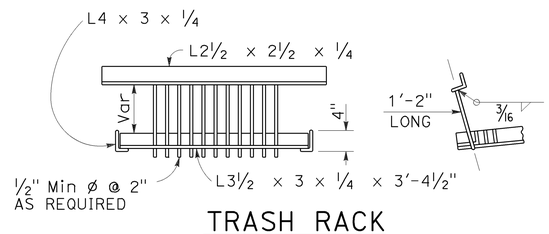

TRASH RACK

(For use with pump installation)

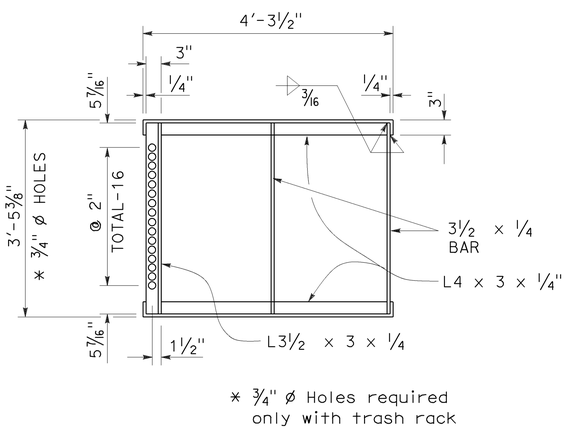

* 3/4" ø Holes required only with trash rack

GRATE FRAME FOR TYPE GDO INLET

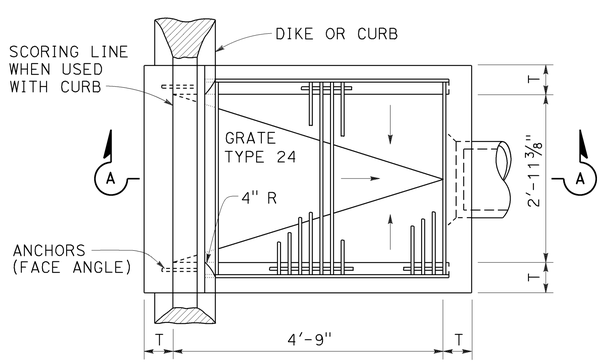

PLAN

TYPE GDO

TABLE A

CONCRETE QUANTITIES				
TYPE	H=3'-0" TO 8'-0" (T=6")		H=8'-1" TO 20'-0" (T=8")	
	H=3'-0" (CY)	ADDITIONAL PCC PER FOOT (CY)	H=8'-1" (CY)	ADDITIONAL PCC PER FOOT (CY)
GO	1.24	0.245	3.39	0.346
GDO	1.62	0.322	4.36	0.446

Table based on 8" floor slab, and curb type giving highest quantity of concrete. no deductions or adjustments are to be made to these quantities because of pipe openings, different floor alternatives or different curb type.

TABLE B

CURB TYPE	NORMAL CURB HEIGHT	CURB BATTER	"a" DIMENSION	"b" DIMENSION
A1-6	6"	1 1/2"	T+7 1/2"	T+6 1/2"
A1-8	8"	2"	T+7"	T+6"
B1-6	6"	4"	T+5"	T+4"
TYPE A DIKE	6"	3"	T+6"	T+5"

NOTES:

1. "H" is the difference in elevation between the outlet pipe flow line and the normal gutter grade line undepressed.
2. For "T" wall thickness, see Table A below.
3. Wall reinforcing not required when "H" is 8'-0" or less and the unsupported width or length is 7'-0" or less. Walls exceeding these limits shall be reinforced with #4 @ 18"± centers placed 1 1/2" clear to inside of box unless otherwise shown.
4. Inlet bottom reinforcing not required. See Standard Plan D74C for alternative reinforced bottom.
5. Steps - None required where "H" is less than 2'-6" Where "H" is 2'-6" or more, install steps with lowest rung 1'-0" above the floor and highest rung not more than 6" below top of inlet. The distance between steps shall not exceed 1'-0" and shall be uniform throughout the length of the wall. Place steps in the wall without an opening. Step inserts may be substituted for the bar steps. Step Inserts shall comply with State Industrial Safety requirements. See Standard Plan D74C for step details.
6. When shown on the project plans, place a 3/4" plain round protection bar horizontally across the length of the opening and bend back 4" into the inlet wall on each side.
7. Pipe(s) can be placed in any wall.
8. Curb section shall match adjacent curb.
9. Basin floors shall have wood trowel finish and shall slope toward the outlet pipe as shown.
10. See Revised Standard Plans RSP D77A and RSP D77B for grate and frame details and weights of miscellaneous iron and Steel.
11. See Standard Plan D78A for gutter depression details.
12. Complete joint penetration butt welds may be substituted for the fillet welds on all anchors.
13. Standard square, hexagon, round or equivalent headed anchors may be substituted for the right angle hooks on the anchors shown on this plan.
14. Cast-in-place inlets to be formed around all pipes/stubs intersecting the inlet and concrete poured in one continuous operation. Precast inlets shall have mortared pipe connections conforming to details for Type GCP inlets on Revised Standard Plan RSP D75B. See Standard Specifications for mortar composition.

STATE OF CALIFORNIA
DEPARTMENT OF TRANSPORTATION

DRAINAGE INLETS

NO SCALE

RSP D74B DATED OCTOBER 30, 2015 SUPERSEDES STANDARD PLAN D74B DATED MAY 20, 2011 - PAGE 159 OF THE STANDARD PLANS BOOK DATED 2010.

REVISED STANDARD PLAN RSP D74B

2010 REVISED STANDARD PLAN RSP D74B

10-13-15

Dist	COUNTY	ROUTE	POST MILES TOTAL PROJECT	SHEET No.	TOTAL SHEETS
04	SM	82,84	1.4/25.1; 23.1/24.1	167	196

Raymond Don Tsztoo
REGISTERED CIVIL ENGINEER

April 19, 2013
PLANS APPROVAL DATE

REGISTERED PROFESSIONAL ENGINEER Raymond Don Tsztoo No. C37332 Exp. 6-30-14 CIVIL STATE OF CALIFORNIA

THE STATE OF CALIFORNIA OR ITS OFFICERS OR AGENTS SHALL NOT BE RESPONSIBLE FOR THE ACCURACY OR COMPLETENESS OF SCANNED COPIES OF THIS PLAN SHEET.

TO ACCOMPANY PLANS DATED 2-16-16

2010 REVISED STANDARD PLAN RSP D77B

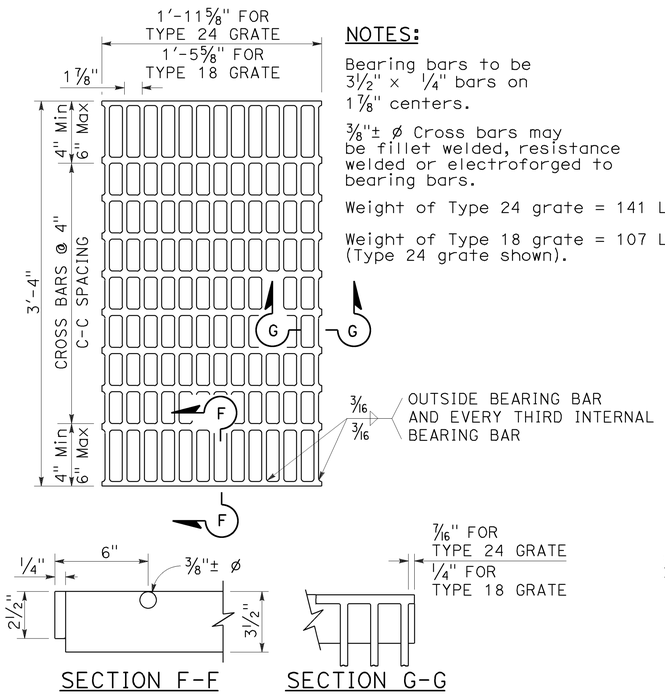

SECTION F-F SECTION G-G

TYPE 18-10 AND 24-13 GRATE

(Welded Steel)

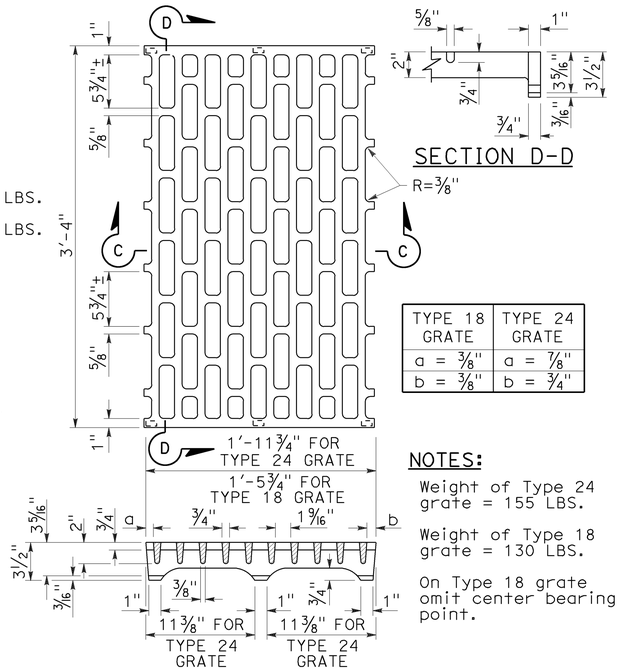

SECTION D-D

TYPE 18 GRATE	TYPE 24 GRATE
a = ⅜"	a = ⅞"
b = ⅜"	b = ¾"

SECTION C-C

TYPE 18-8C AND 24-10C GRATE

(Cast ductile iron)

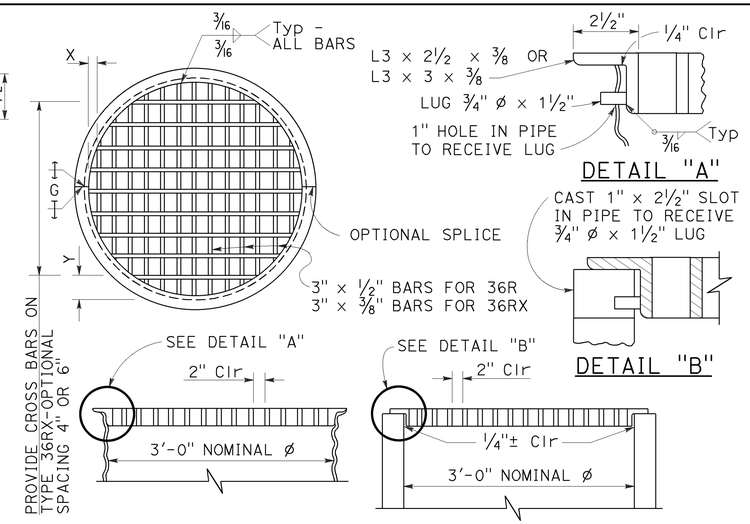

DETAIL "A"

DETAIL "B"

TYPE 36R AND 36RX GRATE DETAILS

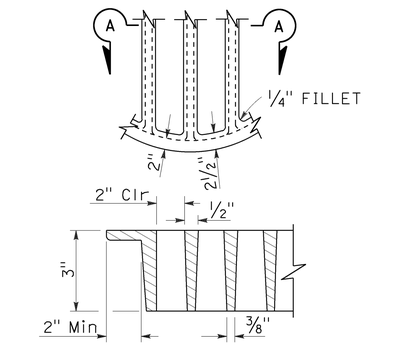

SECTION A-A

ALTERNATIVE CAST DUCTILE IRON GRATE OR CAST CARBON STEEL GRATE TYPE 36R AND 36RX

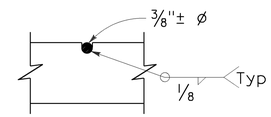

⅜"± ø Cross bars may be fillet welded, resistance welded or electroforged to bearing bars.

CROSS BAR DETAIL TYPE 36RX GRATE (WELDED STEEL)

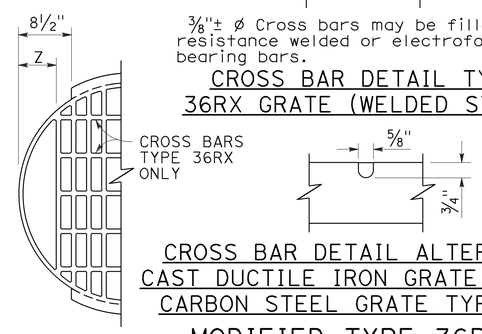

CROSS BAR DETAIL ALTERNATIVE CAST DUCTILE IRON GRATE OR CAST CARBON STEEL GRATE TYPE 36RX

MODIFIED TYPE 36R AND 36RX GRATE FOR ODI INLET

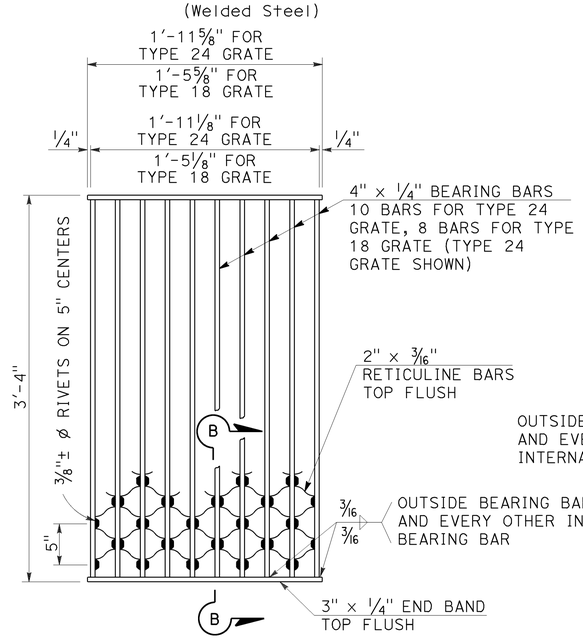

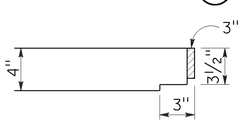

SECTION B-B

NOTES:

Weight of Type 24 grate = 182 LBS.
Weight of Type 18 grate = 145 LBS.

TYPE 18-8S AND 24-10S GRATE

(Welded Steel) Reticuline type

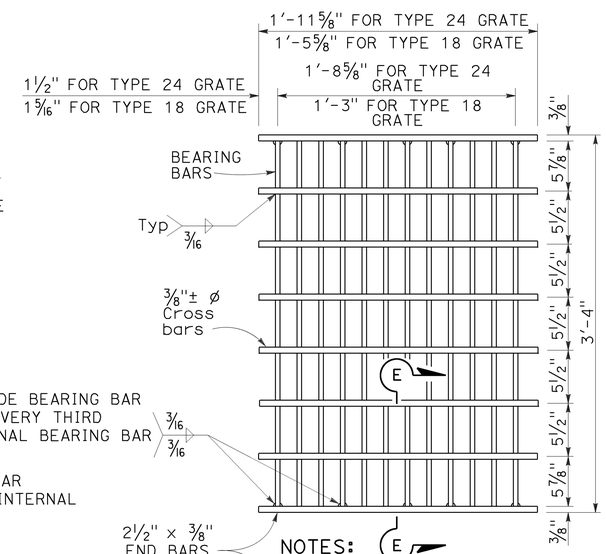

SECTION E-E

NOTES:

Bearing bars to be 3½" x ⅜" bars on 1⅞" centers.

12 Bars for Type 24 grate - 9 bars for Type 18 grates. (Type 24 grate shown).

Weight of Type 24 grate = 192 LBS.

Weight of Type 18 grate = 145 LBS.

⅜"± ø Cross bars may be fillet welded, resistance welded or electroforged to bearing bars.

TYPE 18-9X AND 24-12X GRATE

(Welded Steel)

NOTES:

1. When alternative grates are allowed - Final pay based on alternative with the lesser weight.
2. Use frame shown on Standard Plan D74A, D74B or RSP D77A as appropriate.
3. When Type 24-10S, 24-12X or 24-13 grates are used with GDO Inlets, a ¼" x 3½" x 3'-4⅞" steel bar shall be welded across the center of inlet frame to separate the individual grates.
4. See Revised Standard Plan RSP D77A for connecting chain to welded grate and frame. When chain is required, do not use cast ductile iron grate.

GRATE BAR SPACING TABLE

TYPE	No. OF BARS	CLEAR BAR SPACING	X	Y 4" SPACING	Y 6" SPACING	Z
36R	13	2"	2⅛"	-	-	-
36RX (STEEL)	15	2"	9/16"	3¾"	5¾"	-
36RX (CAST)	13	2"	2⅛"	3¾"	5¾"	-
36R Mod	12	2"	2⅛"	-	-	5"
36RX Mod (STEEL)	13	2"	9/16"	3¾"	5¾"	5 11/16"
36RX Mod (CAST)	12	2"	2⅛"	3¾"	5¾"	5"

BASIS FOR Misc IRON AND STEEL FINAL PAY WEIGHTS FOR DRAINAGE INLETS

INLET TYPE	GRATE TYPE	No. OF GRATES	WEIGHT LB
GDO (SEE NOTE 4)	24-10C	2	391
	24-10S	2	456
	24-12X	2	473
	24-13	2	374
GO,GOL,G1,G2, G3,G4 (TYPE 24)	24-10C	1	202
	24-10S	1	229
	24-12X	1	239
	24-13	1	188
G4 (TYPE 18) G5,G6	18-8S	1	187
	18-9X	1	187
	18-10	1	149
GT1,GT2	18-8S	2	374
	18-9X	2	374
	18-10	2	298
GT3,GT4	24-10C	2	404
	24-10S	2	458
	24-12X	2	478
	24-13	2	376
ODI	36RX (Mod)	1	196
GMP,GCP,GCPI	36RX	1	215
ODI	36R (Mod)	1	220
GMP,GCP,GCPI	36R	1	236
TRASH RACK			22
GRATE CHAIN			3

STATE OF CALIFORNIA
DEPARTMENT OF TRANSPORTATION

GRATE DETAILS No. 2

NO SCALE

RSP D77B DATED APRIL 19, 2013 SUPERSEDES RSP D77B DATED JULY 20, 2012 AND STANDARD PLAN D77B DATED MAY 20, 2011 - PAGE 165 OF THE STANDARD PLANS BOOK DATED 2010.

REVISED STANDARD PLAN RSP D77B

4-4-13

Dist	COUNTY	ROUTE	POST MILES TOTAL PROJECT	SHEET No.	TOTAL SHEETS
04	SM	82,84	1.4/25.1; 23.1/24.1	168	196

REGISTERED CIVIL ENGINEER

April 19, 2013
PLANS APPROVAL DATE

REGISTERED PROFESSIONAL ENGINEER
Gurinderpal Bhullar
No. C48815
Exp. 9-30-14
CIVIL
STATE OF CALIFORNIA

THE STATE OF CALIFORNIA OR ITS OFFICERS OR AGENTS SHALL NOT BE RESPONSIBLE FOR THE ACCURACY OR COMPLETENESS OF SCANNED COPIES OF THIS PLAN SHEET.

TO ACCOMPANY PLANS DATED 2-16-16

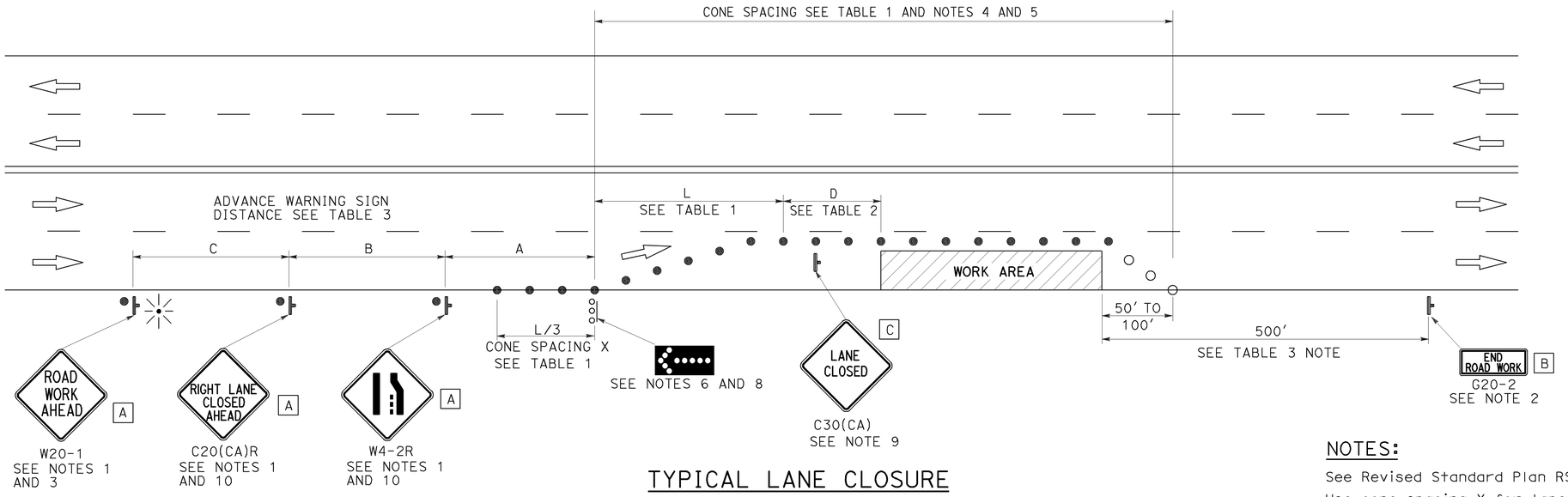

TYPICAL LANE CLOSURE

NOTES:

See Revised Standard Plan RSP T9 for tables.

Use cone spacing X for taper segment, Y for tangent segment or Z for conflict situations, as approriate, per Table 1, unless X, Y, or Z cone spacing is shown on this sheet.

Unless otherwise specified in the special provisions, all temporary warning signs shall have black legend on fluorescent orange background.

California codes are designated by (CA). Otherwise, Federal (MUTCD) codes are shown.

NOTES:

1. Each advance warning sign shall be equipped with at least two flags for daytime closure. Each flag shall be at least 16" x 16" in size and shall be orange or fluorescent red-orange in color. Flashing beacons shall be placed at the locations indicated for lane closure during hours of darkness.
2. A G20-2 "END ROAD WORK" sign, as appropriate, shall be placed at the end of the lane closure unless the end of work area is obvious, or ends within a larger project's limits.
3. If the W20-1 sign would follow within 2000' of a stationary W20-1 or G20-1 "ROAD WORK NEXT _____ MILES", use a C20(CA) sign for the first advance warning sign.
4. All cones used for lane closures during the hours of darkness shall be fitted with retroreflective bands (or sleeves) as specified in the specifications.
5. Portable delineators, placed at one-half the spacing indicated for traffic cones, may be used instead of cones for daytime closures only.
6. Flashing arrow sign shall be either Type I or Type II.
7. For approach speeds over 50 mph, use the "Traffic Control System for Lane Closure On Freeways And Expressways" plan for lane closure details and requirements.
8. A minimum 1500' of sight distance shall be provided where possible for vehicles approaching the first flashing arrow sign. Lane closures shall not begin at the top of crest vertical curve or on a horizontal curve.
9. Place a C30(CA) sign every 2000' throughout length of lane closure.
10. Median lane closures shall conform to the details as shown except that C20(CA)L and W4-2L signs shall be used.
11. At least one person shall be assigned to provide full time maintenance of traffic control devices for lane closure unless, otherwise directed by the Engineer.

LEGEND

- ● TRAFFIC CONE
- ○ TRAFFIC CONE (OPTIONAL TAPER)
- TEMPORARY TRAFFIC CONTROL SIGN
- FLASHING ARROW SIGN (FAS)
- FAS SUPPORT OR TRAILER
- PORTABLE FLASHING BEACON

SIGN PANEL SIZE (Min)

A	48" x 48"
B	36" x 18"
C	30" x 30"

STATE OF CALIFORNIA
DEPARTMENT OF TRANSPORTATION

TRAFFIC CONTROL SYSTEM FOR LANE CLOSURE ON MULTILANE CONVENTIONAL HIGHWAYS

NO SCALE

RSP T11 DATED APRIL 19, 2013 SUPERSEDES STANDARD PLAN T11 DATED MAY 20, 2011 - PAGE 239 OF THE STANDARD PLANS BOOK DATED 2010.

REVISED STANDARD PLAN RSP T11

2010 REVISED STANDARD PLAN RSP T11

4-2-13

Dist	COUNTY	ROUTE	POST MILES TOTAL PROJECT	SHEET No.	TOTAL SHEETS
04	SM	82,84	1.4/25.1; 23.1/24.1	169	196

REGISTERED CIVIL ENGINEER

April 19, 2013
PLANS APPROVAL DATE

REGISTERED PROFESSIONAL ENGINEER Gurinderpal Bhullar No. C48815 Exp. 9-30-14 CIVIL STATE OF CALIFORNIA

THE STATE OF CALIFORNIA OR ITS OFFICERS OR AGENTS SHALL NOT BE RESPONSIBLE FOR THE ACCURACY OR COMPLETENESS OF SCANNED COPIES OF THIS PLAN SHEET.

TO ACCOMPANY PLANS DATED 2-16-16

LEGEND

- TRAFFIC CONE
- TEMPORARY TRAFFIC CONTROL SIGN
- FLASHING ARROW SIGN (FAS)
- FAS SUPPORT OR TRAILER
- PORTABLE FLASHING BEACON

SIGN PANEL SIZE (Min)

A	48" x 48"
B	24" x 24"
C	36" x 18"

NOTES:

See Revised Standard Plan RSP T9 for tables.

Use cone spacing X for taper segment, Y for tangent segment or Z for conflict situations, as approriate, per Table 1, unless X, Y, or Z cone spacing is shown on this sheet.

Unless otherwise specified in the special provisions, all temporary warning signs shall have black legend on fluorescent orange background.

California codes are designated by (CA). Otherwise, Federal (MUTCD) codes are shown.

TYPICAL HALF ROAD CLOSURE

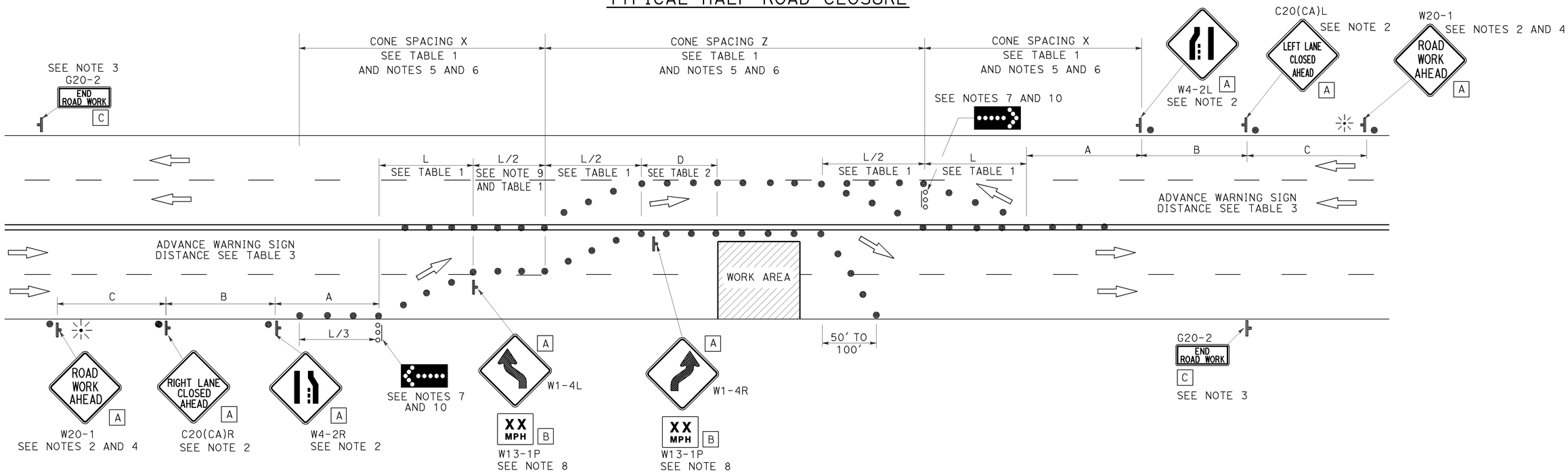

NOTES:

1. At least one person shall be assigned to provide full time maintenance of traffic control devices for lane closure unless, otherwise directed by the Engineer.
2. Each advance warning sign in each direction of travel shall be equipped with at least two flags for daytime closure. Each flag shall be at least 16" x 16" in size and shall be orange or fluorescent red-orange in color. Flashing beacons shall be placed at the locations indicated for lane closure during hours of darkness.
3. A G20-2 "END ROAD WORK" sign, as appropriate, shall be placed at the end of the lane closure unless the end of work area is obvious, or ends within a larger project's limits.
4. If the W20-1 sign would follow within 2000' of a stationary W20-1 or G20-1 "ROAD WORK NEXT _____ MILES", use a C20(CA) sign for the first advance warning sign.
5. All cones used for lane closures during the hours of darkness shall be fitted with retroreflective bands (or sleeves) as specified in the specifications.
6. Portable delineators, placed at one-half the spacing indicated for traffic cones, may be used instead of cones for daytime closures only.
7. Flashing arrow signs shall be either Type I or Type II.
8. Advisory speed will be determined by the Engineer. The W13-1P Plaque will not be required when advisory speed is more than the posted or maximum speed limit.
9. Unless otherwise specified in the special provisions, the tangent (L/2) shall be used.
10. A minimum 1500' of sight distance shall be provided where possible for vehicles approaching the first flashing arrow sign. Lane closures shall not begin at the top of crest vertical curve or on a horizontal curve.

STATE OF CALIFORNIA
DEPARTMENT OF TRANSPORTATION

TRAFFIC CONTROL SYSTEM FOR HALF ROAD CLOSURE ON MULTILANE CONVENTIONAL HIGHWAYS AND EXPRESSWAYS

NO SCALE

RSP T12 DATED APRIL 19, 2013 SUPERSEDES STANDARD PLAN T12
DATED MAY 20, 2011 - PAGE 240 OF THE STANDARD PLANS BOOK DATED 2010.

REVISED STANDARD PLAN RSP T12

2010 REVISED STANDARD PLAN RSP T12

4-2-13

Dist	COUNTY	ROUTE	POST MILES TOTAL PROJECT	SHEET No.	TOTAL SHEETS
04	SM	82,84	1.4/25.1; 23.1/24.1	170	196

Theresa Gabriel
REGISTERED ELECTRICAL ENGINEER

July 19, 2013
PLANS APPROVAL DATE

REGISTERED PROFESSIONAL ENGINEER Theresa Aziz Gabriel No. E15129 Exp. 6-30-14 ELECTRICAL STATE OF CALIFORNIA

THE STATE OF CALIFORNIA OR ITS OFFICERS OR AGENTS SHALL NOT BE RESPONSIBLE FOR THE ACCURACY OR COMPLETENESS OF SCANNED COPIES OF THIS PLAN SHEET.

TO ACCOMPANY PLANS DATED 2-16-16

LEGEND:

AB	ABANDON. IF APPLIED TO CONDUIT, REMOVE CONDUCTORS
BC	INSTALL PULL BOX IN EXISTING CONDUIT RUN
BP	PEDESTRIAN BARRICADE, TYPE AS INDICATED ON PLAN
CB	INSTALL CONDUIT INTO EXISTING PULL BOX
CC	CONNECT NEW AND EXISTING CONDUIT. REMOVE EXISTING CONDUCTORS AND INSTALL CONDUCTORS AS INDICATED
CF	CONDUIT TO REMAIN FOR FUTURE USE. REMOVE CONDUCTORS. INSTALL PULL TAPE
DH	DETECTOR HANDHOLE
FA	FOUNDATION TO BE ABANDONED
IS	INSTALL SIGN ON SIGNAL MAST ARM
NS	NO SLIP BASE ON STANDARD
PEC	PHOTOELECTRIC CONTROL
PEU	PHOTOELECTRIC UNIT
RC	EQUIPMENT OR MATERIAL TO BE REMOVED AND BECOME THE PROPERTY OF THE CONTRACTOR
RE	REMOVE ELECTROLIER, FUSES AND BALLAST. TAPE ENDS OF CONDUCTORS
RL	RELOCATE EQUIPMENT
RR	REMOVE AND REUSE EQUIPMENT
RS	REMOVE AND SALVAGE EQUIPMENT
SC	SPLICE NEW TO EXISTING CONDUCTORS
SD	SERVICE DISCONNECT
TSP	TELEPHONE SERVICE POINT

ABBREVIATIONS

APS	ACCESSIBLE PEDESTRIAN SIGNAL
BBS	BATTERY BACKUP SYSTEM
BC	BOLT CIRCLE
BPB	BICYCLE PUSH BUTTON
C	CONDUIT
CB	CIRCUIT BREAKER
CCTV	CLOSED CIRCUIT TELEVISION
Ckt	CIRCUIT
CMS	CHANGEABLE MESSAGE SIGN
Ctid	CALTRANS IDENTIFICATION
Comm	COMMUNICATION
DLC	LOOP DETECTOR LEAD-IN CABLE
EMS	EXTINGUISHABLE MESSAGE SIGN
EVUC	EMERGENCY VEHICLE UNIT CABLE
EVUD	EMERGENCY VEHICLE UNIT DETECTOR
FB	FLASHING BEACON
FBCA	FLASHING BEACON CONTROL ASSEMBLY
FBS	FLASHING BEACON WITH SLIP BASE
FO	FIBER OPTIC
G	EQUIPMENT GROUNDING CONDUCTOR
GB	GROUND BUS
GFCI	GROUND FAULT CIRCUIT INTERRUPTER
HAR	HIGHWAY ADVISORY RADIO
Hex	HEXAGONAL
HPS	HIGH PRESSURE SODIUM
IISNS	INTERNALLY ILLUMINATED STREET NAME SIGN
ISL	INDUCTION SIGN LIGHTING
LED	LIGHT EMITTING DIODE
LMA	LUMINAIRE MAST ARM
LPS	LOW PRESSURE SODIUM
Ltg	LIGHTING
Lum	LUMINAIRE
M	METERED
MAT	MAST ARM MOUNTING TOP ATTACHMENT
MAS	MAST ARM MOUNTING SIDE ATTACHMENT
M/M	MULTIPLE TO MULTIPLE TRANSFORMER
Mtg	MOUNTING
MV	MERCURY VAPOR LIGHTING FIXTURE
MVDS	MICROWAVE VEHICLE DETECTION SYSTEM
N	NEUTRAL (GROUNDED CONDUCTOR)
NB	NEUTRAL BUS
NC	NORMALLY CLOSE
NO	NORMALLY OPEN
P	CIRCUIT BREAKER'S POLE
PB	PULL BOX
PBA	PUSH BUTTON ASSEMBLY
PEC	PHOTOELECTRIC CONTROL
Ped	PEDESTRIAN
PEU	PHOTOELECTRIC UNIT
PT	CONDUIT WITH PULL TAPE
RE	RELOCATED EQUIPMENT
RM	RAMP METERING
RWIS	ROADSIDE WEATHER INFORMATION SYSTEM
SB	SLIP BASE
SIC	SIGNAL INTERCONNECT CABLE
Sig	SIGNAL
SMA	SIGNAL MAST ARM
SNS	STREET NAME SIGN
SP	SERVICE POINT
TDC	TELEPHONE DEMARCATION CABINET
TMS	TRAFFIC MONITORING STATION
TOS	TRAFFIC OPERATIONS SYSTEM
Veh	VEHICLE
VIVDS	VIDEO IMAGE VEHICLE DETECTION SYSTEM
WIM	WEIGH-IN-MOTION
Xfmr	TRANSFORMER

SOFFIT AND WALL MOUNTED LUMINAIRES

PENDANT, 70 W HPS UNLESS OTHERWISE SPECIFIED

FLUSH, 70 W HPS UNLESS OTHERWISE SPECIFIED

WALL SURFACE, 70 W HPS UNLESS OTHERWISE SPECIFIED

EXISTING SOFFIT OR WALL LUMINAIRE TO REMAIN UNMODIFIED

EXISTING SOFFIT OR WALL LUMINAIRE TO BE MODIFIED AS SPECIFIED

NOTE:

Arrow indicates "street side" of luminaire.

COMMONLY USED SYMBOLS FOR UNITED STATES CUSTOMARY UNITS OF MEASUREMENT:

SYMBOL USED	DEFINITIONS
Ω	OHMS
min	MINUTE
s	SECOND
bps	BITS PER SECOND
Bps	BYTES PER SECOND
A	AMPERE
V	VOLT
V(dc)	VOLT (DIRECT CURRENT)
V(ac)	VOLT (ALTERNATING CURRENT)
FC	FOOT - CANDLE
W	WATTS
VA	VOLT-AMPERE
M	MEGA
k	KILO
m	MILLI
μ	MICRO
P	PICO
Hz	HERTZ

MISCELLANEOUS ELECTROLIERS

NEW	EXISTING	
		LUMINAIRE ON WOOD POLE
		NON-STANDARD ELECTROLIER (SEE PROJECT NOTES OR PROJECT PLANS)
		CITY ELECTROLIER
		ELECTROLIER FOUNDATION (FUTURE INSTALLATION)

NOTES:

1. HPS luminaires shall be 310 W HPS when installed on Type 21, 21D, 30, 31 and 32 Standards, unless otherwise specified. HPS luminaires shall be 200 W when installed on other type standards or poles, unless otherwise specified.
2. LED luminaires shall be 235 W when installed on Type 21, 21D, 30, 31 and 32 Standards, unless otherwise specified. LED luminaires shall be 165 W when installed on other type standards or poles, unless otherwise specified.
3. Luminaires shall be the cutoff type, ANSI Type III medium cutoff lighting distribution, unless otherwise specified.

STANDARD ELECTROLIER

NEW	EXISTING	STANDARD TYPE
		15
		15D
		15 STRUCTURE
		15D STRUCTURE
		21
		21D
		21 STRUCTURE
		21D STRUCTURE
		30
		31
		32

STATE OF CALIFORNIA
DEPARTMENT OF TRANSPORTATION

ELECTRICAL SYSTEMS (LEGEND AND ABBREVIATIONS)

NO SCALE

RSP ES-1A DATED JULY 19, 2013 SUPERSEDES STANDARD PLAN ES-1A DATED MAY 20, 2011 - PAGE 425 OF THE STANDARD PLANS BOOK DATED 2010.

REVISED STANDARD PLAN RSP ES-1A

2010 REVISED STANDARD PLAN RSP ES-1A

Dist	COUNTY	ROUTE	POST MILES TOTAL PROJECT	SHEET No.	TOTAL SHEETS
04	SM	82,84	1.4/25.1; 23.1/24.1	171	196

Theresa Gabriel
REGISTERED ELECTRICAL ENGINEER

July 19, 2013
PLANS APPROVAL DATE

REGISTERED PROFESSIONAL ENGINEER
Theresa Aziz Gabriel
No. E15129
Exp. 6-30-14
ELECTRICAL
STATE OF CALIFORNIA

THE STATE OF CALIFORNIA OR ITS OFFICERS OR AGENTS SHALL NOT BE RESPONSIBLE FOR THE ACCURACY OR COMPLETENESS OF SCANNED COPIES OF THIS PLAN SHEET.

TO ACCOMPANY PLANS DATED 2-16-16

CONDUIT

NEW	EXISTING	
		LIGHTING CONDUIT, UNLESS OTHERWISE INDICATED OR NOTED
		TRAFFIC SIGNAL CONDUIT
C	c	COMMUNICATION CONDUIT
T	t	TELEPHONE CONDUIT
F	f	FIRE ALARM CONDUIT
FO	fo	FIBER OPTIC CONDUIT
		CONDUIT TERMINATION
R	r	CONDUIT RISER ATTACHED TO THE STRUCTURE OR SERVICE POLE

SERVICE EQUIPMENT

NEW	EXISTING	
OH	oh	OVERHEAD LINES
U	U	WOOD POLE, "U" INDICATES UTILITY OWNED
		POLE GUY WITH ANCHOR
		UTILITY TRANSFORMER - GROUND MOUNTED
III	III	SERVICE EQUIPMENT ENCLOSURE TYPE. DOOR INDICATES FRONT OF ENCLOSURE
T	t	TELEPHONE DEMARCATION CABINET

POLE-MOUNTED SERVICE DESIGNATION

TYPE H SERVICE, 28'-10" — TYPE OF INSTALLATION AND POLE HEIGHT ABOVE GRADE

FLASHING BEACON

NEW	EXISTING	
R	R	FLASHING BEACON (ONE VEHICLE SIGNAL HEAD WITH BACKPLATE AND VISOR) "R" INDICATES RED INDICATION, "Y" INDICATES YELLOW INDICATION
Y Y	Y Y	FLASHING BEACON WITH TYPE 15-FBS STANDARD AND A SIGN.
R R	R R	FLASHING BEACON WITH TYPES 9, 9A OR 9B SIGN UNLESS OTHERWISE SPECIFIED OR INDICATED

SIGNAL EQUIPMENT

NEW	EXISTING	
C	C	PEDESTRIAN SIGNAL HEAD "C" INDICATES COUNTDOWN PEDESTRIAN HEAD
		PUSH BUTTON ASSEMBLY POST
		PEDESTRIAN BARRICADE
		VEHICLE SIGNAL HEAD (WITH BACKPLATE AND 3-SECTIONS: RED, YELLOW AND GREEN)
		VEHICLE SIGNAL HEAD WITH ANGLE VISOR
PV	PV	MODIFICATIONS OF BASIC SYMBOL: "L" INDICATES ALL NON-ARROW SECTIONS LOUVERED "LG" INDICATES LOUVERED GREEN SECTION ONLY "PV" INDICATES ALL 12" SECTIONS PROGRAMMED VISIBILITY "8" INDICATES ALL 8" SECTIONS (ONLY WHEN SPECIFIED)
		VEHICLE SIGNAL HEAD CONSISTING OF RED, YELLOW AND GREEN LEFT ARROW SECTIONS
		VEHICLE SIGNAL HEAD CONSISTING OF RED AND YELLOW SECTIONS WITH AN UP GREEN ARROW SECTION
		VEHICLE SIGNAL HEAD (5 SECTION) CONSISTING OF RED, YELLOW AND GREEN SECTIONS WITH YELLOW AND GREEN RIGHT ARROW SECTIONS
		TYPE 15TS STANDARD WITH VEHICLE SIGNAL HEAD AND LUMINAIRE
		TYPE 21TS STANDARD WITH VEHICLE SIGNAL HEAD AND LUMINAIRE
		STANDARD WITH LUMINAIRE AND SIGNAL MAST ARMS AND ATTACHED VEHICLE SIGNAL HEADS
		TYPE 1 STANDARD WITH ATTACHED VEHICLE SIGNAL HEADS
		STANDARD WITH A SIGNAL MAST ARM, ATTACHED VEHICLE SIGNAL HEADS AND INTERNALLY ILLUMINATED STREET NAME SIGN
		CONTROLLER ASSEMBLY. DOOR INDICATES FRONT OF CABINET

SIGNAL EQUIPMENT Cont

NEW	EXISTING	
		GUARD POST
		TYPE 1 STANDARD WITH RAMP METERING SIGN
		OPTICAL DETECTOR FOR THE EMERGENCY VEHICLE DETECTION SYSTEM

NOTES:

1. All signal sections shall be 12" unless shown otherwise.
2. Signal heads shall be provided with backplates unless shown otherwise.

ILLUMINATED OVERHEAD SIGN

NEW	EXISTING	
		SINGLE POST, SINGLE ILLUMINATED SIGN, BALANCED BUTTERFLY
		SINGLE POST, DOUBLE ILLUMINATED SIGN, BALANCED BUTTERFLY
		SINGLE POST, SINGLE ILLUMINATED SIGN, FULL CANTILEVER
		DOUBLE POST, SINGLE ILLUMINATED SIGN
		SINGLE ILLUMINATED SIGN MOUNTED ON STRUCTURE
		DOUBLE POST, SINGLE ILLUMINATED SIGN WITH ELECTROLIER

STATE OF CALIFORNIA
DEPARTMENT OF TRANSPORTATION

ELECTRICAL SYSTEMS (LEGEND AND ABBREVIATIONS)

NO SCALE

RSP ES-1B DATED JULY 19, 2013 SUPERSEDES STANDARD PLAN ES-1B DATED MAY 20, 2011 - PAGE 426 OF THE STANDARD PLANS BOOK DATED 2010.

REVISED STANDARD PLAN RSP ES-1B

2010 REVISED STANDARD PLAN RSP ES-1B

7-15-13

Dist	COUNTY	ROUTE	POST MILES TOTAL PROJECT	SHEET No.	TOTAL SHEETS
04	SM	82,84	1.4/25.1; 23.1/24.1	172	196

Theresa Gabriel
REGISTERED ELECTRICAL ENGINEER

July 19, 2013
PLANS APPROVAL DATE

REGISTERED PROFESSIONAL ENGINEER
Theresa Aziz Gabriel
No. E15129
Exp. 6-30-14
ELECTRICAL
STATE OF CALIFORNIA

THE STATE OF CALIFORNIA OR ITS OFFICERS OR AGENTS SHALL NOT BE RESPONSIBLE FOR THE ACCURACY OR COMPLETENESS OF SCANNED COPIES OF THIS PLAN SHEET.

TO ACCOMPANY PLANS DATED 2-16-16

EQUIPMENT IDENTIFICATION

ILLUMINATED SIGN IDENTIFICATION NUMBER:

SIGN No. 12345
10 ISL SCI 1.0

- SIGN NUMBER - PLACE ON POST OR STRUCTURE
- TRANSFORMER RATING (kVA)
- LIGHTING CONTROL TYPE
- NUMBER AND TYPE OF FIXTURES

DO NOT PLACE ON STANDARD OR STRUCTURE

ELECTROLIER OR EQUIPMENT IDENTIFICATION NUMBER:

12345 - 15'-0"

- MAST ARM LENGTH, IF SHOWN. DO NOT PLACE ON STANDARD OR STRUCTURE
- EQUIPMENT NUMBER - PLACE ON STANDARD OR STRUCTURE. EXISTING EQUIPMENT NUMBERS ARE SHOWN IN PARENTHESIS

CONDUIT AND CONDUCTOR IDENTIFICATION:

1½"C, 2#10, 15#14, 2 DLC, 12P#18 (PAIR)

- NUMBER AND SIZE OF CONDUCTORS AND CABLES
- SIZE OF CONDUIT IN INCHES

ø1, ø2, ø2P, etc.	TRAFFIC PHASE IDENTIFICATION FOR SIGNAL FACES, DETECTORS AND PHASE DIAGRAMS
1 2 3	LEGEND NUMBERS
A B C	EQUIPMENT, SIGNAL POLES, INSTALLATION OR ITEMS
1 2 3	CONDUIT RUN NUMBERS

SIGNAL AND LIGHTING STANDARD (TYPICAL DESIGNATION):

19A - 3 - 100

- WIND VELOCITY = 100 mph
- CASE 3 ARM LOADING
- STANDARD TYPE
- STANDARD PLAN SHEET NUMBER
- DETAIL, NUMBER, SECTION, TYPE OR ELEVATION

MISCELLANEOUS EQUIPMENT

NEW	EXISTING	
CMS	cms	CHANGEABLE MESSAGE SIGN
		CLOSED CIRCUIT TELEVISION CAMERA
		HIGHWAY ADVISORY RADIO POLE AND ANTENNA
EMS	ems	EXTINGUISHABLE MESSAGE SIGN
M V	m v	DETECTION DEVICE M = MICROWAVE SENSOR V = VIDEO IMAGE SENSOR

WIRING DIAGRAM LEGEND

----	EXTERNAL CONDUCTOR
———	CONDUCTOR OR BUS
	TIE POINT
	CONTACTOR COIL
	CONTACTOR, NO CONTACT
	TERMINAL BLOCKS
	CONTACTOR, NC CONTACT
	ENCLOSURE BOND
	GROUNDING ELECTRODE
	CIRCUIT BREAKER
	RECEPTACLE

PULL BOXES

NEW	EXISTING	
		PULL BOX, No. 5 UNLESS OTHERWISE INDICATED OR NOTED
3	9A(21)	PULL BOX, ADDITIONAL DESIGNATIONS OR DESCRIPTIONS

3 No. 3½ PULL BOX
5 No. 5 PULL BOX
6 No. 6 PULL BOX
7 No. 7 (CEILING PULL BOX)
8 No. 8 (PENDANT SOFFIT PULL BOX)
9 No. 9 PULL BOX
9A No. 9A PULL BOX

(C) COMMUNICATIONS PULL BOX
(E) PULL BOX WITH EXTENSION
(S) SPRINKLER CONTROL PULL BOX
(21) ANCHOR BOLTS AND CONDUIT FOR FUTURE INSTALLATION OF TYPE 21 STANDARD
(T) TRAFFIC PULL BOX

VEHICLE DETECTORS

5 J 9 U

- VEHICLE DETECTOR DESIGNATION
- U = UPPER
  L = LOWER
- SLOT NUMBER IN INPUT FILE
- INPUT FILE (I OR J)
- PHASE

NEW	EXISTING	
		TYPE A DETECTOR LOOP. OUTLINE OF SAWCUT SHOWN
		TYPE B DETECTOR LOOP. OUTLINE OF SAWCUT SHOWN
		TYPE C DETECTOR LOOP. OUTLINE OF SAWCUT SHOWN
		TYPE D DETECTOR LOOP. OUTLINE OF SAWCUT SHOWN
		TYPE E DETECTOR LOOP. OUTLINE OF SAWCUT SHOWN
		TYPE Q DETECTOR LOOP. OUTLINE OF SAWCUT SHOWN
		MAGNETIC DETECTOR
DH	dh	DETECTOR HANDHOLE
		MICROWAVE OR VIDEO DETECTION ZONE

STATE OF CALIFORNIA
DEPARTMENT OF TRANSPORTATION

ELECTRICAL SYSTEMS (LEGEND AND ABBREVIATIONS)

NO SCALE

RSP ES-1C DATED JULY 19, 2013 SUPERSEDES STANDARD PLAN ES-1C DATED MAY 20, 2011 - PAGE 427 OF THE STANDARD PLANS BOOK DATED 2010.

REVISED STANDARD PLAN RSP ES-1C

2010 REVISED STANDARD PLAN RSP ES-1C

7-11-13

Dist	COUNTY	ROUTE	POST MILES TOTAL PROJECT	SHEET No.	TOTAL SHEETS
04	SM	82,84	1.4/25.1; 23.1/24.1	173	196

Theresa Gabriel
REGISTERED ELECTRICAL ENGINEER

October 30, 2015
PLANS APPROVAL DATE

REGISTERED PROFESSIONAL ENGINEER
Theresa Aziz Gabriel
No. E15129
Exp. 6-30-16
ELECTRICAL
STATE OF CALIFORNIA

THE STATE OF CALIFORNIA OR ITS OFFICERS OR AGENTS SHALL NOT BE RESPONSIBLE FOR THE ACCURACY OR COMPLETENESS OF SCANNED COPIES OF THIS PLAN SHEET.

TO ACCOMPANY PLANS DATED 2-16-16

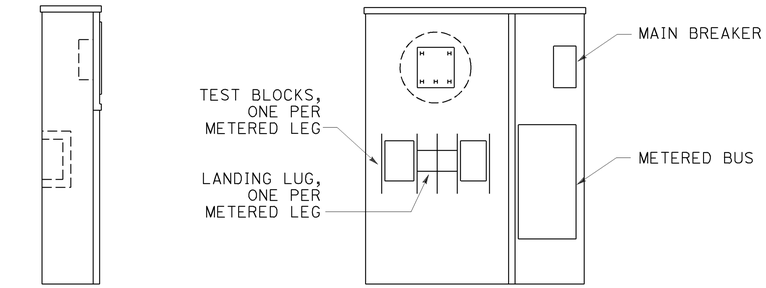

SIDE VIEW ELEVATION

TYPE II-A

NOTES:

1. In unpaved areas, a raised portland cement concrete pad of 2'-0" x 4" x width of service equipment enclosure or controller cabinet foundation shall be constructed in front of Type II service equipment enclosure.
2. Circuit breakers may be mounted in the vertical or horizontal position.

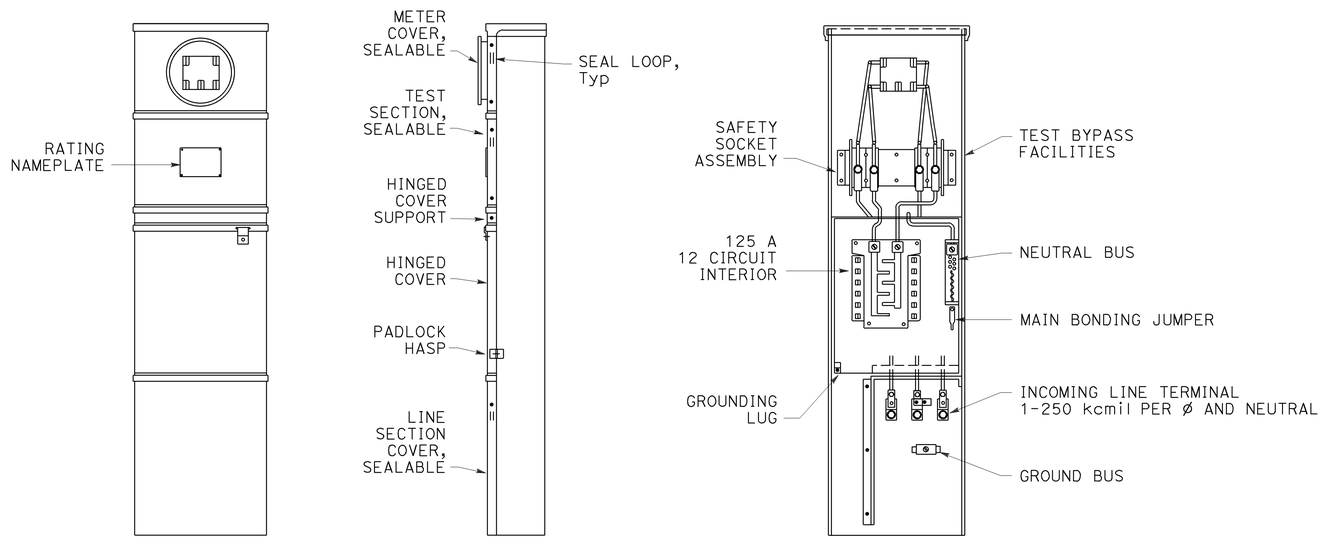

FRONT VIEW SIDE VIEW FRONT VIEW

(Less covers and dead front panel)
For metered circuits only

TYPE II-B

STATE OF CALIFORNIA
DEPARTMENT OF TRANSPORTATION

ELECTRICAL SYSTEMS (SERVICE EQUIPMENT ENCLOSURE TYPE II SERIES)

NO SCALE

RSP ES-2B DATED OCTOBER 30, 2015 SUPERSEDES STANDARD PLAN ES-2B DATED MAY 20, 2011 - PAGE 429 OF THE STANDARD PLANS BOOK DATED 2010.

REVISED STANDARD PLAN RSP ES-2B

2010 REVISED STANDARD PLAN RSP ES-2B

8-20-15

Dist	COUNTY	ROUTE	POST MILES TOTAL PROJECT	SHEET No.	TOTAL SHEETS
04	SM	82,84	1.4/25.1; 23.1/24.1	174	196

Theresa Gabriel
REGISTERED ELECTRICAL ENGINEER

October 30, 2015
PLANS APPROVAL DATE

REGISTERED PROFESSIONAL ENGINEER
Theresa Aziz Gabriel
No. E15129
Exp. 6-30-16
ELECTRICAL
STATE OF CALIFORNIA

THE STATE OF CALIFORNIA OR ITS OFFICERS OR AGENTS SHALL NOT BE RESPONSIBLE FOR THE ACCURACY OR COMPLETENESS OF SCANNED COPIES OF THIS PLAN SHEET.

TO ACCOMPANY PLANS DATED 2-16-16

2010 REVISED STANDARD PLAN RSP ES-2C

NOTES:

1. The plan shows the approximate location of devices within the enclosure. Components may be rearranged, however, the "working" clearances within the service equipment enclosure shall be maintained.

2. In unpaved areas a raised portland cement concrete pad 2'-0" x 4" x width of foundation shall be constructed in front of new service equipment enclosure installation. Pad shall be set to elevation of foundation.

3. Plug-in circuit breakers may be mounted in the vertical or horizontal position. Cable-in/cable-out circuit breakers shall be mounted in the vertical position.

4. Type III-AF and Type III-BF service equipment enclosures shall have the meter viewing windows located on the front side of the service equipment enclosures.

5. Type III-AR and Type III-BR service equipment enclosure shall be similarly constructed as Type III-AF and Type III-BF respectively, except the meter viewing windows shall be located on the back side of the service equipment enclosures.

STATE OF CALIFORNIA
DEPARTMENT OF TRANSPORTATION

ELECTRICAL SYSTEMS (SERVICE EQUIPMENT ENCLOSURE NOTES TYPE III SERIES)

NO SCALE

RSP ES-2C DATED OCTOBER 30, 2015 SUPERSEDES STANDARD PLAN ES-2C DATED MAY 20, 2011 - PAGE 430 OF THE STANDARD PLANS BOOK DATED 2010.

REVISED STANDARD PLAN RSP ES-2C

Dist	COUNTY	ROUTE	POST MILES TOTAL PROJECT	SHEET No.	TOTAL SHEETS
04	SM	82.84	1.4/25.1, 23.1/24.1	175	196

Theresa Gabriel
REGISTERED ELECTRICAL ENGINEER

October 30, 2015
PLANS APPROVAL DATE

REGISTERED PROFESSIONAL ENGINEER Theresa Aziz Gabriel No. E15129 Exp. 6-30-16 ELECTRICAL STATE OF CALIFORNIA

THE STATE OF CALIFORNIA OR ITS OFFICERS OR AGENTS SHALL NOT BE RESPONSIBLE FOR THE ACCURACY OR COMPLETENESS OF SCANNED COPIES OF THIS PLAN SHEET.

TO ACCOMPANY PLANS DATED 2-16-16

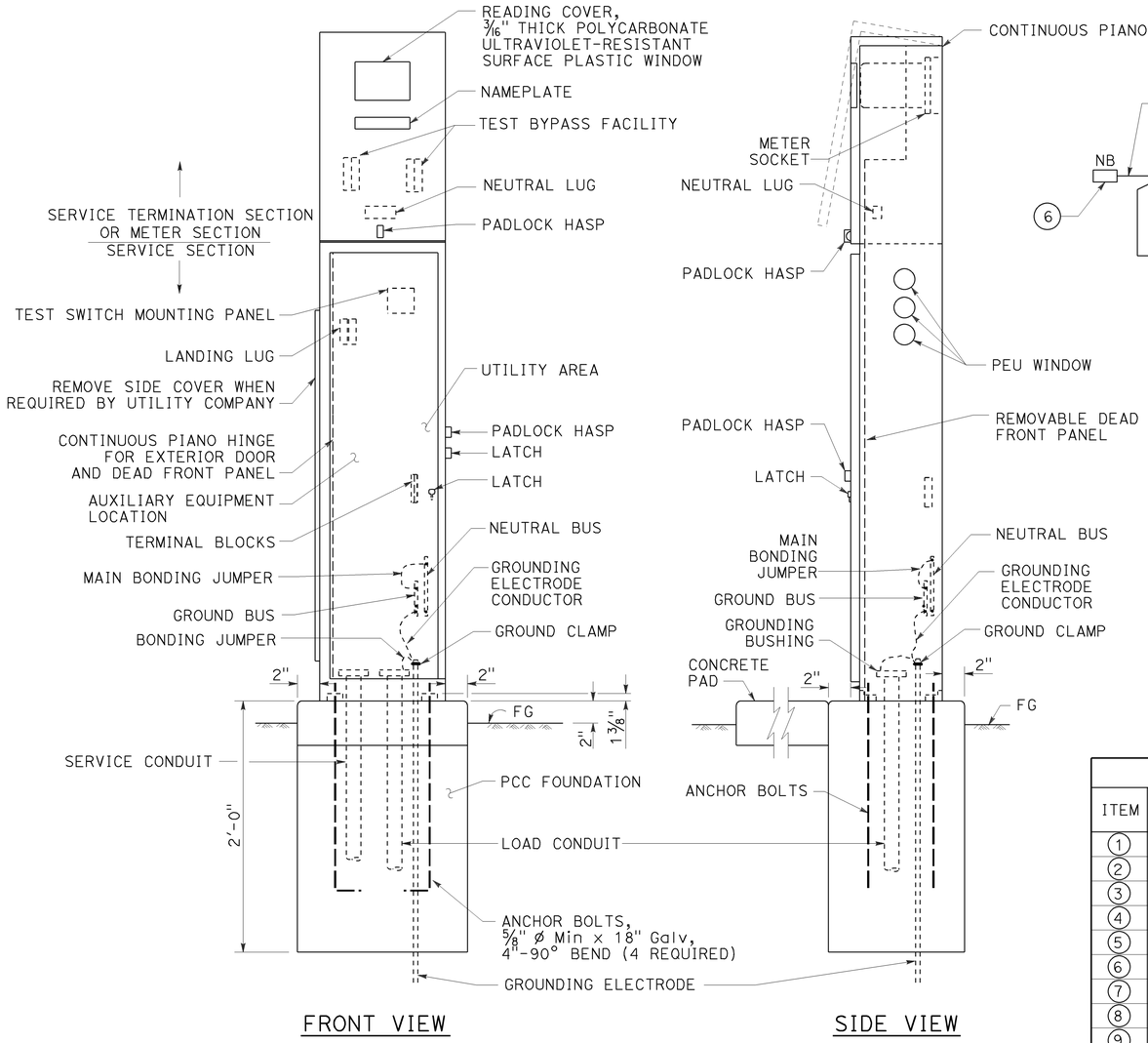

FRONT VIEW

SIDE VIEW

TYPE III-AF SERVICE EQUIPMENT ENCLOSURE (TYPICAL)

DETAIL A

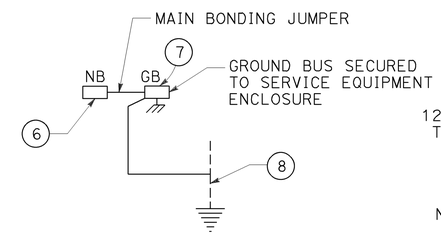

DETAIL D

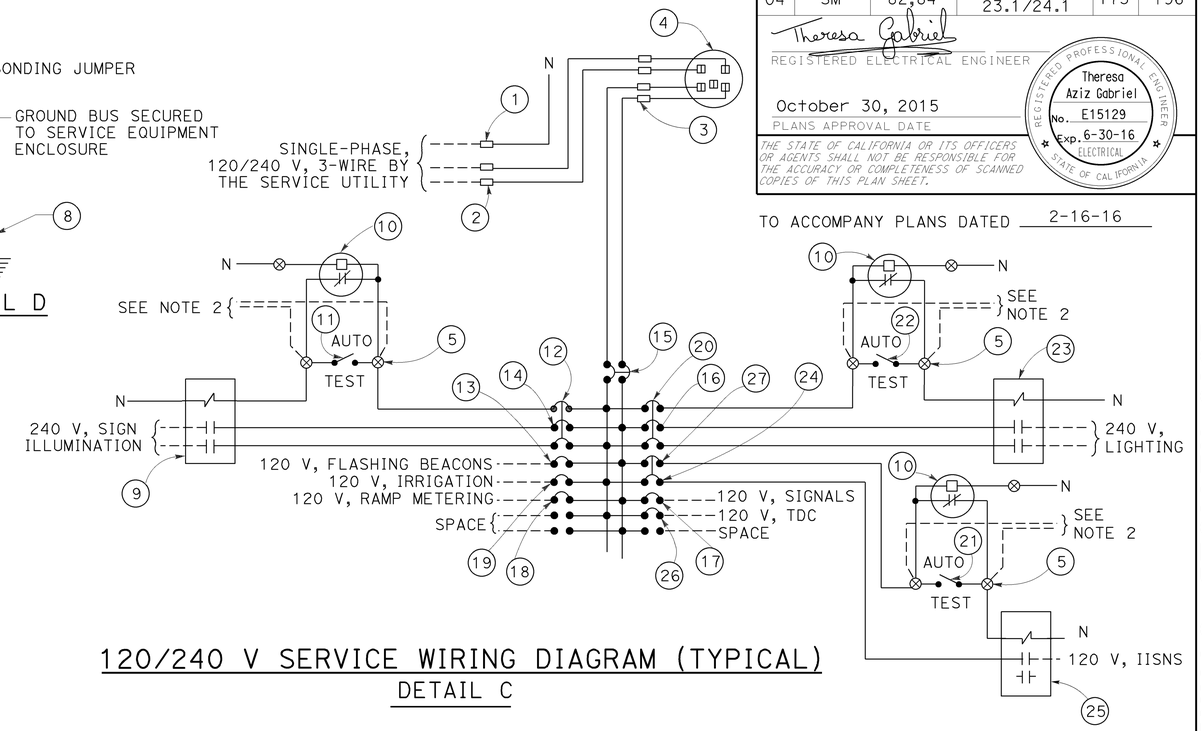

120/240 V SERVICE WIRING DIAGRAM (TYPICAL)

DETAIL C

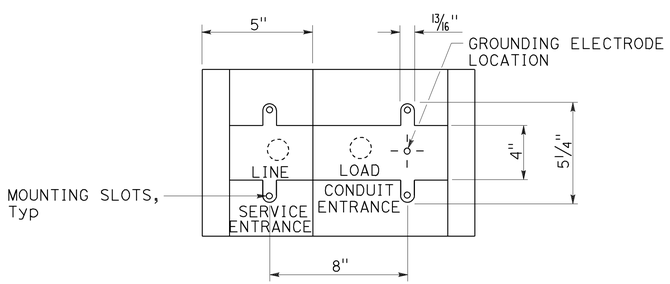

BASE FOR TYPE III-A SERVICE EQUIPMENT ENCLOSURE

DETAIL B

TYPE III-A SERVICE EQUIPMENT ENCLOSURE LEGEND (120/240 V)

ITEM	COMPONENT	NAMEPLATE DESCRIPTION	ITEM	COMPONENT	NAMEPLATE DESCRIPTION
1	NEUTRAL LUG		14	30 A, 240 V, 2P, CB	SIGN ILLUMINATION
2	LANDING LUG		15	100 A, 240 V, 2P, CB	MAIN BREAKER
3	TEST BYPASS FACILITY		16	30 A, 240 V, 2P, CB	LIGHTING
4	METER SOCKET AND SUPPORT		17	50 A, 120 V, 1P, CB	SIGNALS
5	TERMINAL BLOCKS		18	30 A, 120 V, 1P, CB	RAMP METERING
6	NEUTRAL BUS		19	20 A, 120 V, 1P, CB	IRRIGATION
7	GROUND BUS		20	15 A, 120 V, 1P, CB	LIGHTING CONTROL
8	GROUNDING ELECTRODE		21	15 A, 1P, TEST SWITCH	IISNS TEST SWITCH
9	30 A, 2P, NO CONTACTOR	SIGN ILLUMINATION	22	15 A, 1P, TEST SWITCH	LIGHTING TEST SWITCH
10	PHOTOELECTRIC UNIT (NOTE 4)	PEU	23	60 A, 2P, NO CONTACTOR	LIGHTING
11	15 A, 1P, TEST SWITCH	SIGN ILLUMINATION TEST SWITCH	24	15 A, 120 V, 1P, CB	IISNS
12	15 A, 120 V, 1P, CB	SIGN ILLUMINATION CONTROL	25	30 A, 2P, NO CONTACTOR	IISNS
13	15 A, 120 V, 1P, CB	FLASHING BEACON	26	20 A, 120 V, 1P, CB	TELEPHONE DEMARCATION CABINET
			27	15 A, 120 V, 1P, CB	IISNS CONTROL

NOTES:

1. Unless otherwise indicated on the plans, service equipment items shall be provided for each service equipment enclosure as shown.
2. Connect to remote test switch mounted on lighting standards, sign post or structure when required.
3. Items 1 and 6 shall be isolated from the service equipment enclosure.
4. Type V photoelectric control shall be used unless otherwise indicated on the plans.
5. Item 12, 20 and 27 shall be ganged operated CB.

STATE OF CALIFORNIA
DEPARTMENT OF TRANSPORTATION

ELECTRICAL SYSTEMS (SERVICE EQUIPMENT ENCLOSURE AND TYPICAL WIRING DIAGRAM, TYPE III-A SERIES)

NO SCALE

RSP ES-2D DATED OCTOBER 30, 2015 SUPERSEDES STANDARD PLAN ES-2D DATED MAY 20, 2011 - PAGE 431 OF THE STANDARD PLANS BOOK DATED 2010.

REVISED STANDARD PLAN RSP ES-2D

2010 REVISED STANDARD PLAN RSP ES-2D

Dist	COUNTY	ROUTE	POST MILES TOTAL PROJECT	SHEET No.	TOTAL SHEETS
04	SM	82.84	1.4/25.1; 23.1/24.1	176	196

Theresa Gabriel
REGISTERED ELECTRICAL ENGINEER

October 30, 2015
PLANS APPROVAL DATE

REGISTERED PROFESSIONAL ENGINEER Theresa Aziz Gabriel No. E15129 Exp. 6-30-16 ELECTRICAL STATE OF CALIFORNIA

THE STATE OF CALIFORNIA OR ITS OFFICERS OR AGENTS SHALL NOT BE RESPONSIBLE FOR THE ACCURACY OR COMPLETENESS OF SCANNED COPIES OF THIS PLAN SHEET.

TO ACCOMPANY PLANS DATED 2-16-16

2010 REVISED STANDARD PLAN RSP ES-3C

NOTES:

1. Foundation shall be located to provide 2'-0" minimum clearance between face of curb and any portion of cabinet.
2. Controller units, plug-mounted equipment, shelf-mounted equipment and wall-mounted equipment shall be located to permit safe and easy removal or replacement without removing any other piece of equipment.
3. Cabinet fan may be installed at an alternate location near the top of the cabinet when approved by the Engineer.
4. Where telephone interconnect is required, a minimum of 5" clear vertical space shall be provided inside the cabinet for the equipment.
5. Telephone interconnect conductors shall be enclosed in a ¾"C or larger conduit through the foundation. Type 4 conduit shall be used to separate telephone and power conductors in cabinets.

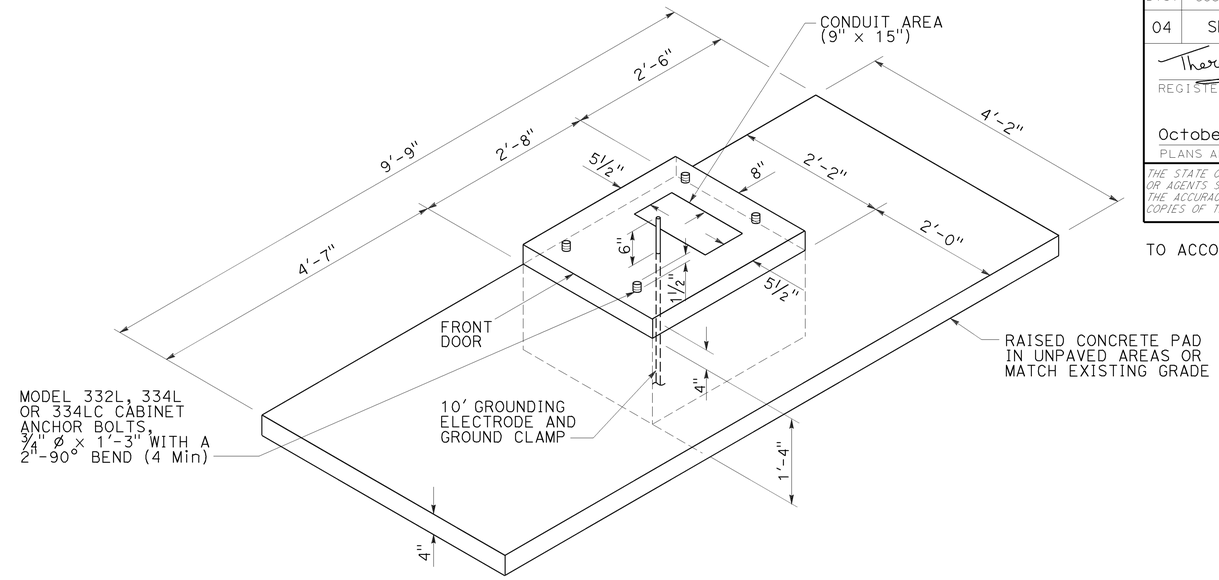

FOUNDATION AND PAD DETAIL

Model 332L, 334L and 334LC

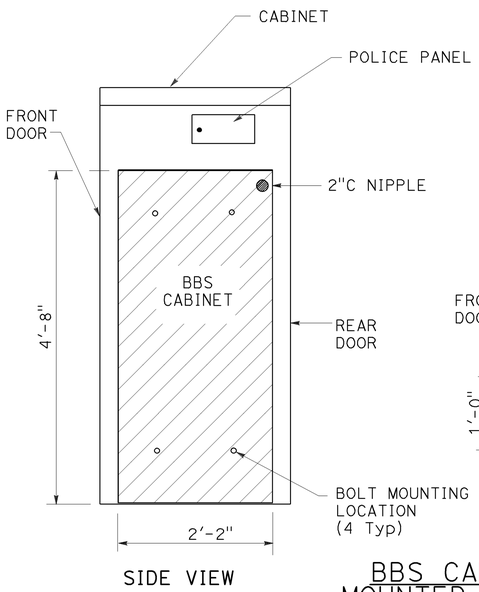

SIDE VIEW

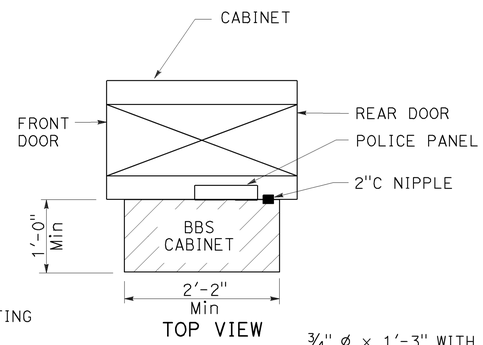

TOP VIEW

BBS CABINET MOUNTED TO THE MODEL 332L CABINET

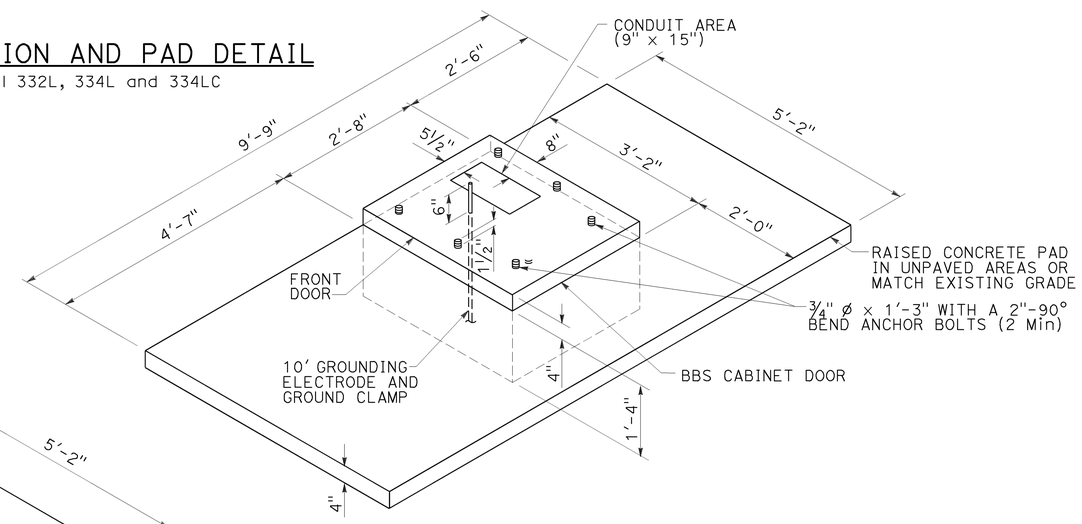

RIGHT SIDE INSTALLATION

DETAIL B

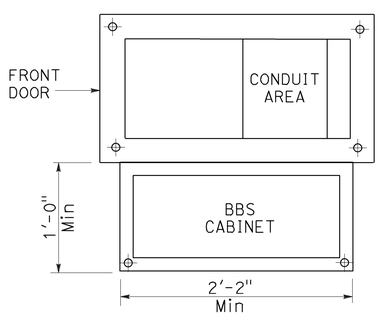

BASE PLAN FOR BBS MOUNTED TO THE MODEL 332L CABINET

(FOR DIMENSIONS AND DETAILS NOT SHOWN, SEE CABINET HOUSING DETAILS OF THE TRANSPORTATION ELECTRICAL EQUIPMENT SPECIFICATION (TEES))

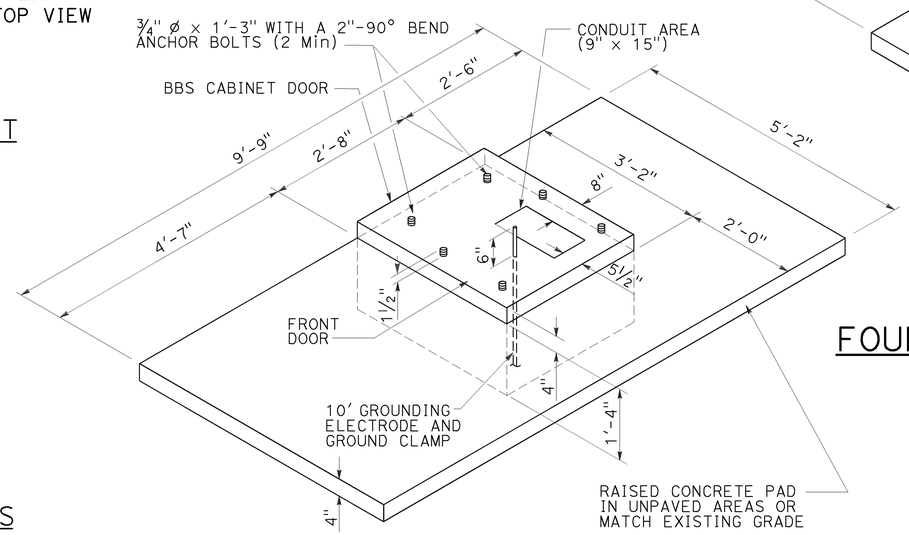

LEFT SIDE INSTALLATION

DETAIL A

MODIFIED MODEL 332L CABINET FOUNDATION DETAIL FOR BATTERY BACKUP SYSTEM

STATE OF CALIFORNIA
DEPARTMENT OF TRANSPORTATION

ELECTRICAL SYSTEMS (CONTROLLER CABINET FOUNDATION AND PAD DETAILS)

NO SCALE

RSP ES-3C DATED OCTOBER 30, 2015 SUPERSEDES STANDARD PLAN ES-3C DATED MAY 20, 2011 - PAGE 437 OF THE STANDARD PLANS BOOK DATED 2010.

REVISED STANDARD PLAN RSP ES-3C

9-2-15

Dist	COUNTY	ROUTE	POST MILES TOTAL PROJECT	SHEET No.	TOTAL SHEETS
04	SM	82,84	1.4/25.1; 23.1/24.1	177	196

Theresa Gabriel
REGISTERED ELECTRICAL ENGINEER

July 19, 2013
PLANS APPROVAL DATE

REGISTERED PROFESSIONAL ENGINEER
Theresa Aziz Gabriel
No. E15129
Exp. 6-30-14
ELECTRICAL
STATE OF CALIFORNIA

THE STATE OF CALIFORNIA OR ITS OFFICERS OR AGENTS SHALL NOT BE RESPONSIBLE FOR THE ACCURACY OR COMPLETENESS OF SCANNED COPIES OF THIS PLAN SHEET.

TO ACCOMPANY PLANS DATED 2-16-16

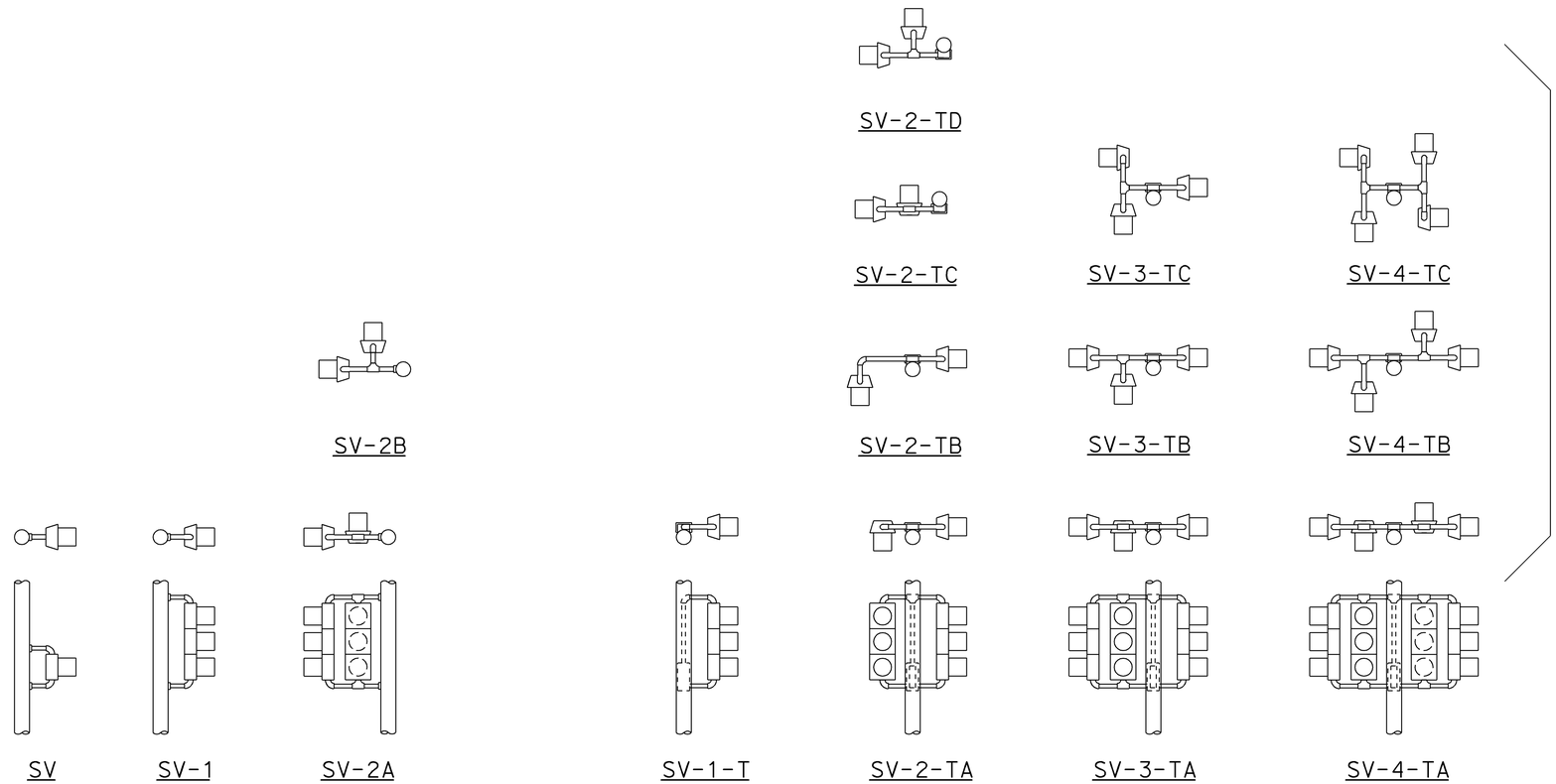

SIDE MOUNTINGS

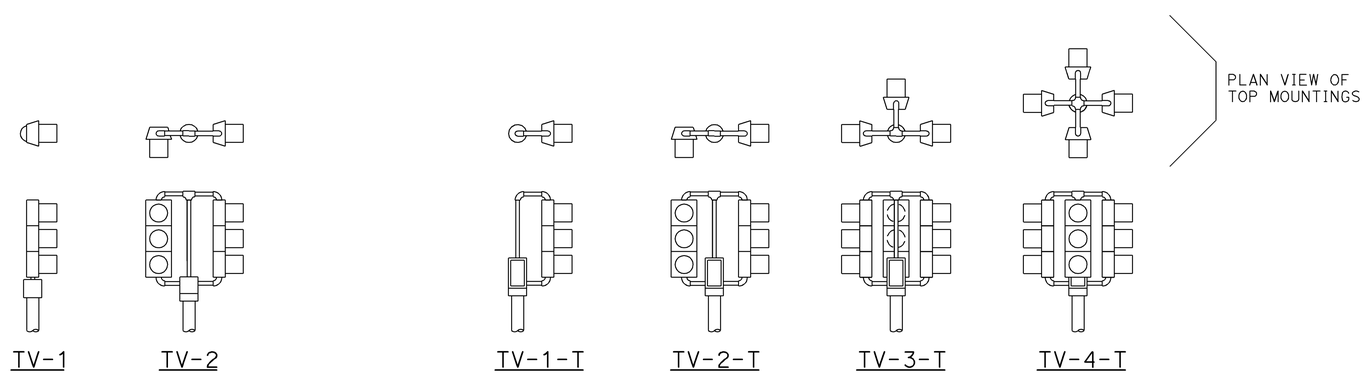

TOP MOUNTINGS

ABBREVIATIONS:

SV	SIDE MOUNTED VEHICLE SIGNALS
T	TERMINAL COMPARTMENT
TV	TOP MOUNTED VEHICLE SIGNALS
1, 2, 3, 4	NUMBER OF SIGNAL FACES (3 - SECTION, UNLESS OTHERWISE INDICATED)
A, B, C, D	CONFIGURATION OF SIGNALS

NOTES:

1. Mountings shall be oriented to provide maximum horizontal clearance to adjacent roadway.
2. Bracket arms shall be long enough to permit proper alignment of signals and backplate installation.
3. See Standard Plans ES-4D and ES-4E for attachment fitting details.

STATE OF CALIFORNIA
DEPARTMENT OF TRANSPORTATION

ELECTRICAL SYSTEMS (VEHICULAR SIGNAL HEADS AND MOUNTINGS)

NO SCALE

RSP ES-4A DATED JULY 19, 2013 SUPERSEDES STANDARD PLAN ES-4A DATED MAY 20, 2011 - PAGE 443 OF THE STANDARD PLANS BOOK DATED 2010.

REVISED STANDARD PLAN RSP ES-4A

2010 REVISED STANDARD PLAN RSP ES-4A

7-9-13

Dist	COUNTY	ROUTE	POST MILES TOTAL PROJECT	SHEET No.	TOTAL SHEETS
04	SM	82,84	1.4/25.1; 23.1/24.1	178	196

Theresa Gabriel
REGISTERED ELECTRICAL ENGINEER

October 17, 2014
PLANS APPROVAL DATE

REGISTERED PROFESSIONAL ENGINEER
Theresa Aziz Gabriel
No. E15129
Exp. 6-30-16
ELECTRICAL
STATE OF CALIFORNIA

THE STATE OF CALIFORNIA OR ITS OFFICERS OR AGENTS SHALL NOT BE RESPONSIBLE FOR THE ACCURACY OR COMPLETENESS OF SCANNED COPIES OF THIS PLAN SHEET.

TO ACCOMPANY PLANS DATED 2-16-16

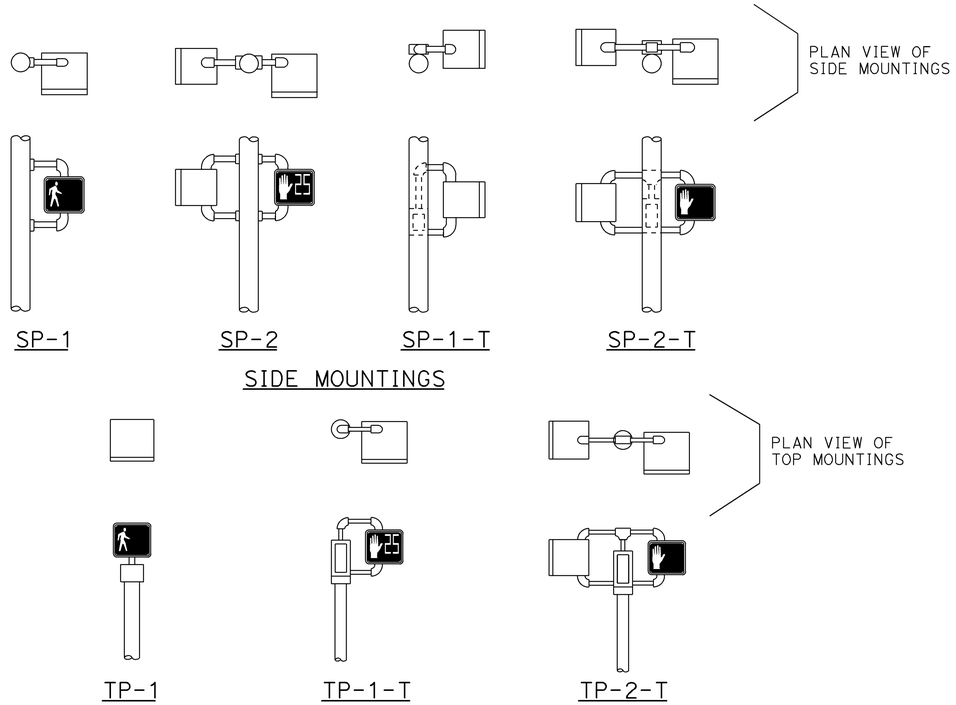

PEDESTRIAN SIGNALS AND MOUNTINGS
DETAIL A

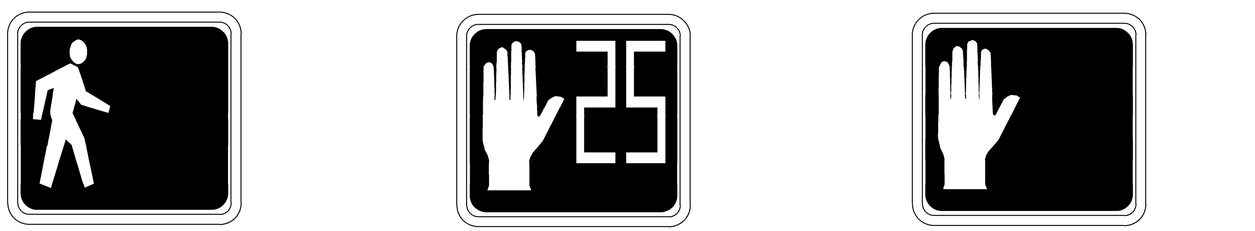

PEDESTRIAN SIGNAL MODULE WITH COUNTDOWN
DETAIL B

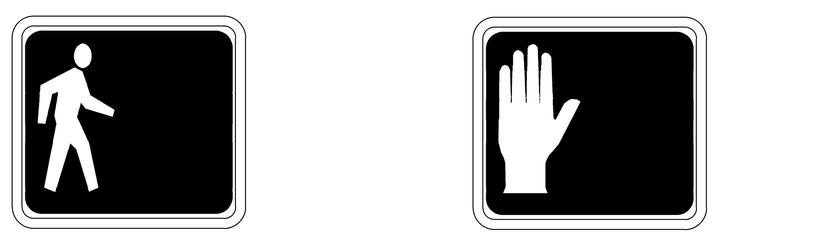

PEDESTRIAN SIGNAL MODULE WITHOUT COUNTDOWN
DETAIL C

NOTES:

1. Mounting shall be oriented to provide maximum horizontal clearance to adjacent roadway.
2. Bracket arms shall be long enough to permit proper alignment of signals.
3. See Standard Plan ES-4D for attachment fittings details.

ABBREVIATIONS:

1, 2	NUMBER OF SIGNAL FACES
SP	SIDE MOUNTED PEDESTRIAN SIGNAL
T	TERMINAL COMPARTMENT
TP	TOP MOUNTED PEDESTRIAN SIGNAL

STATE OF CALIFORNIA
DEPARTMENT OF TRANSPORTATION

ELECTRICAL SYSTEMS (PEDESTRIAN SIGNAL)

NO SCALE

RSP ES-4B DATED OCTOBER 17, 2014 SUPERSEDES RSP ES-4B DATED JULY 19, 2013 AND STANDARD PLAN ES-4B DATED MAY 20, 2011 - PAGE 444 OF THE STANDARD PLANS BOOK DATED 2010.

REVISED STANDARD PLAN RSP ES-4B

2010 REVISED STANDARD PLAN RSP ES-4B

9-23-14

Dist	COUNTY	ROUTE	POST MILES TOTAL PROJECT	SHEET No.	TOTAL SHEETS
04	SM	82,84	1.4/25.1; 23.1/24.1	179	196

Theresa Gabriel
REGISTERED ELECTRICAL ENGINEER

July 19, 2013
PLANS APPROVAL DATE

REGISTERED PROFESSIONAL ENGINEER Theresa Aziz Gabriel No. E15129 Exp. 6-30-14 ELECTRICAL STATE OF CALIFORNIA

THE STATE OF CALIFORNIA OR ITS OFFICERS OR AGENTS SHALL NOT BE RESPONSIBLE FOR THE ACCURACY OR COMPLETENESS OF SCANNED COPIES OF THIS PLAN SHEET.

TO ACCOMPANY PLANS DATED 2-16-16

VISORS

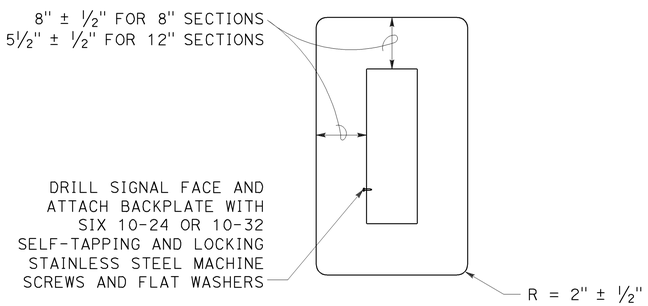

8" AND 12" SECTIONS

BACKPLATE

1/16" minimum thickness
3001-14 aluminum or plastic
when specified

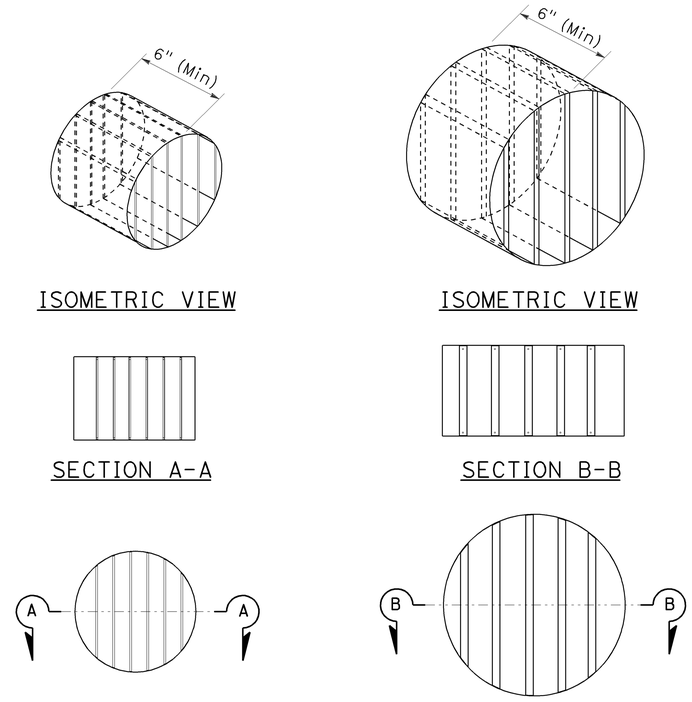

ISOMETRIC VIEW — ISOMETRIC VIEW

SECTION A-A — SECTION B-B

8" DIAMETER FRONT VIEW — 12" DIAMETER FRONT VIEW

DIRECTIONAL LOUVER

Directional louvers shall be oriented as directed by the Engineer and secured in place with one plated brass machine screw and nut.

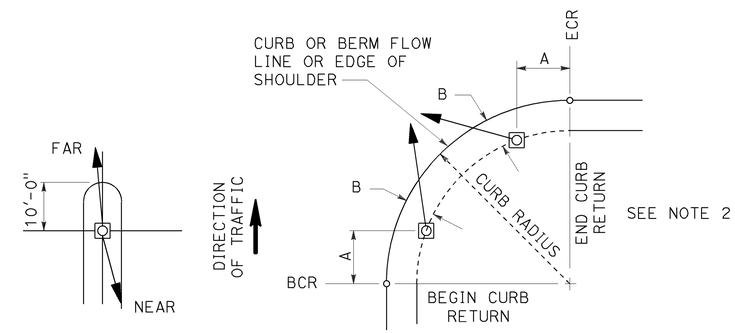

NOTES:

1. Typical signal pole placement unless dimensioned on plans.
2. For A and B dimensions, see Pole Schedule, or as directed by the Engineer.

SIGNAL STANDARD PLACEMENT DIMENSIONS AND EQUIPMENT LOCATIONS

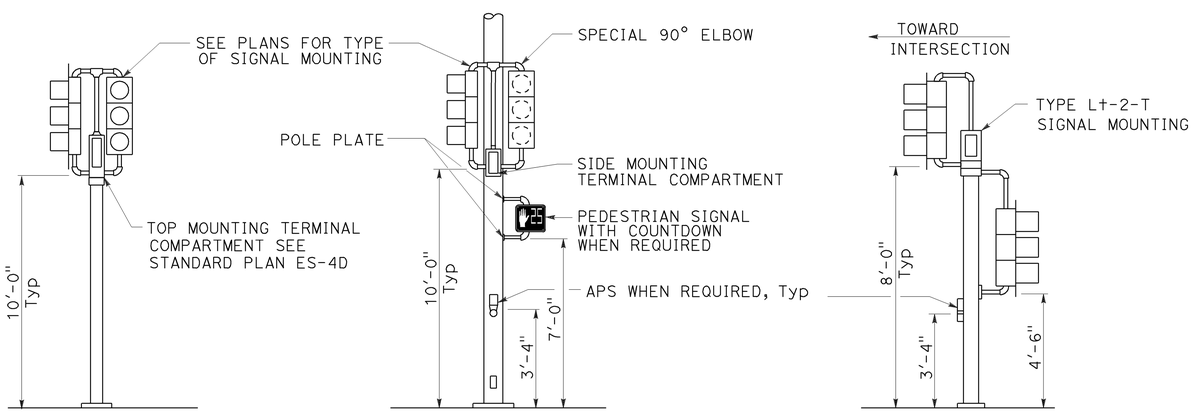

TOP MOUNTED SIGNALS (TV)
Type 1-A, 1-B, 1-C and 1-D standard as indicated on the plans

SIDE MOUNTED SIGNALS (SV AND SP)
Normally used on standards with luminaire or signal mast arm

LEFT TURN LANE SIGNAL
Type 1-A, 1-B, 1-C and 1-D standard as indicated on plans

TYPICAL SIGNAL INSTALLATIONS

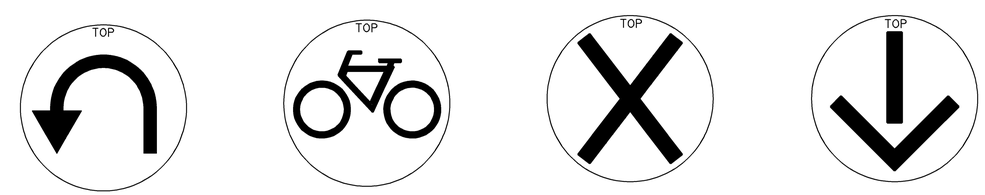

U-TURN — BICYCLE — LANE CONTROL — LANE CONTROL

SIGNAL FACES

STATE OF CALIFORNIA
DEPARTMENT OF TRANSPORTATION

ELECTRICAL SYSTEMS (VEHICULAR SIGNAL HEADS AND MOUNTINGS)

NO SCALE

RSP ES-4C DATED JULY 19, 2013 SUPERSEDES STANDARD PLAN ES-04C DATED MAY 20, 2011 - PAGE 445 OF THE STANDARD PLANS BOOK DATED 2010.

REVISED STANDARD PLAN RSP ES-4C

2010 REVISED STANDARD PLAN RSP ES-4C

Dist	COUNTY	ROUTE	POST MILES TOTAL PROJECT	SHEET No.	TOTAL SHEETS
04	SM	82,84	1.4/25.1; 23.1/24.1	180	196

Theresa Gabriel
REGISTERED ELECTRICAL ENGINEER

October 30, 2015
PLANS APPROVAL DATE

REGISTERED PROFESSIONAL ENGINEER Theresa Aziz Gabriel No. E15129 Exp. 6-30-16 ELECTRICAL STATE OF CALIFORNIA

THE STATE OF CALIFORNIA OR ITS OFFICERS OR AGENTS SHALL NOT BE RESPONSIBLE FOR THE ACCURACY OR COMPLETENESS OF SCANNED COPIES OF THIS PLAN SHEET.

TO ACCOMPANY PLANS DATED 2-16-16

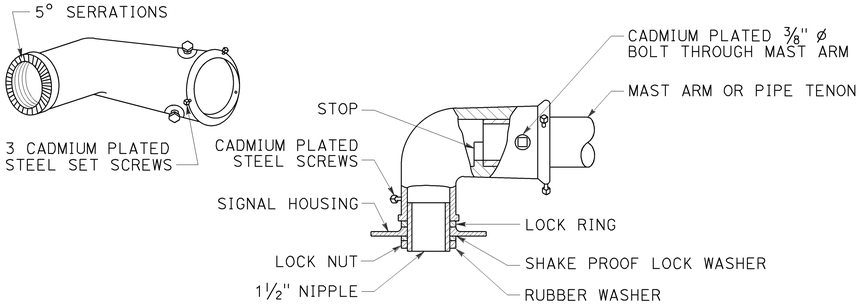

TYPE MAT
MAST ARM MOUNTING
For 2 NPS pipe, see Note 1.

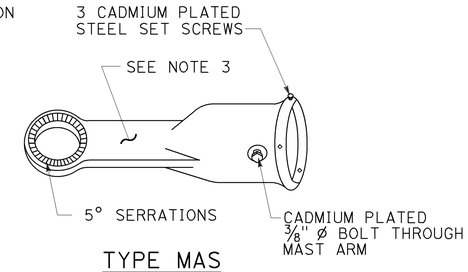

TYPE MAS
MAST ARM MOUNTING
For 2 NPS pipe, see Note 1.

SIGNAL SLIP FITTERS

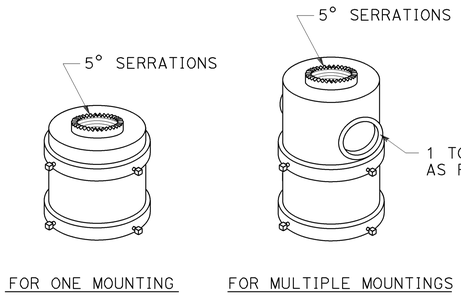

TOP MOUNTINGS
For 4 NPS pipe, see Note 2.

NOTES:

1. After mast arm signal has been plumbed and secured, drill 7/16" hole through mast arm tenon in line with slip fitter hole. Place a cadmium plated ⅜" ø galvanized bolt with washer under bolt head through hole and secure with washer, nut, and locknut. Seal openings between mast arm mountings and mast arm with mastic.
2. (A) Threaded top mounted slip fitter openings shall be 1½ NPS.
   (B) Serrations in fittings shall match those on bottom of signal heads or in lock ring.
   (C) Top opening shall be offset when backplate is used.
3. Wireway shall have a cross section area of 0.95 square inch minimum. Minimum width of ½".

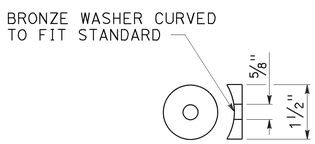

DETAIL C

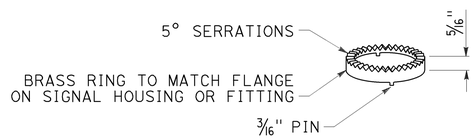

LOCK RING
Use where locking ring is not integral With signal housing or fitting.

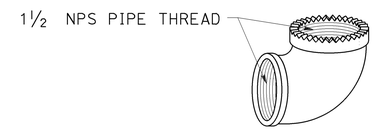

SPECIAL 90° ELBOW
One for each signal head, except those With special slip fitter mounting

MISCELLANEOUS MOUNTING HARDWARE

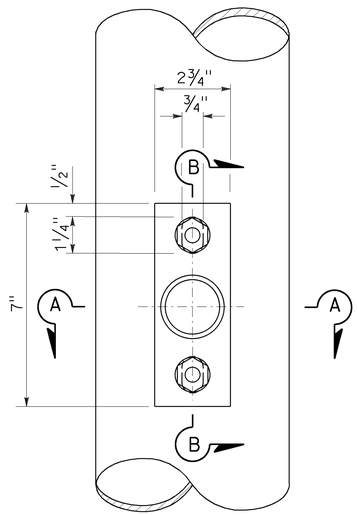

TOP VIEW

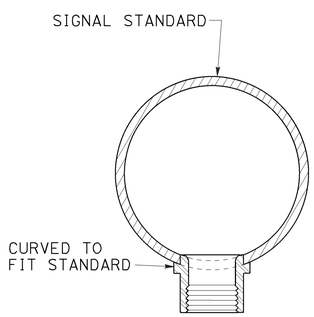

SECTION A-A

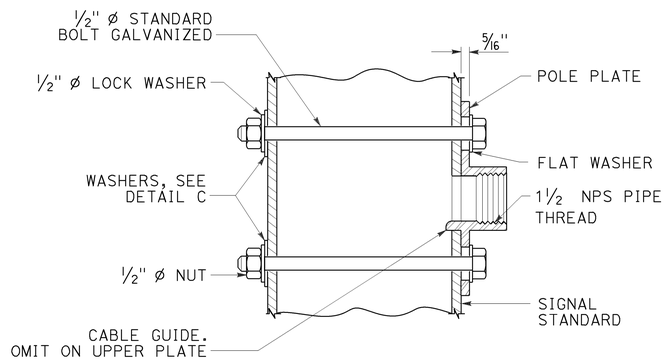

SECTION B-B

POLE PLATE FOR SIDE MOUNTED SIGNAL HEAD
WITHOUT TERMINAL COMPARTMENT

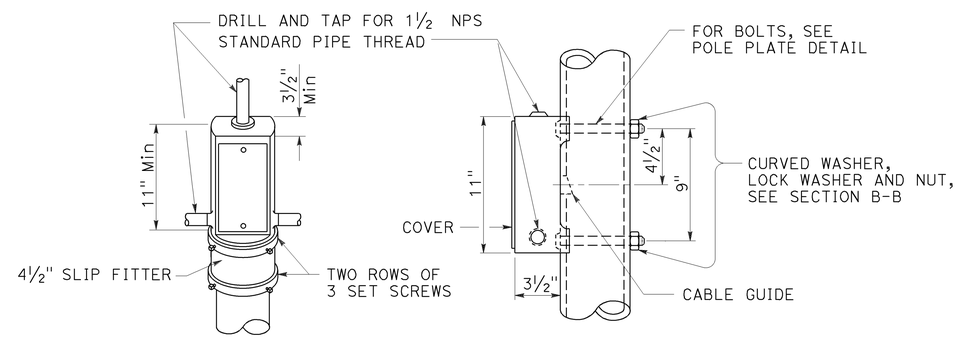

TOP MOUNTING

SIDE MOUNTING

TERMINAL COMPARTMENT

STATE OF CALIFORNIA
DEPARTMENT OF TRANSPORTATION

ELECTRICAL SYSTEMS (SIGNAL HEAD MOUNTING)

NO SCALE

RSP ES-4D DATED OCTOBER 30, 2015 SUPERSEDES STANDARD PLAN ES-4D DATED MAY 20, 2011 - PAGE 446 OF THE STANDARD PLANS BOOK DATED 2010.

REVISED STANDARD PLAN RSP ES-4D

2010 REVISED STANDARD PLAN RSP ES-4D

8-20-15

Dist	COUNTY	ROUTE	POST MILES TOTAL PROJECT	SHEET No.	TOTAL SHEETS
04	SM	82,84	1.4/25.1; 23.1/24.1	181	196

Theresa Gabriel
REGISTERED ELECTRICAL ENGINEER

July 19, 2013
PLANS APPROVAL DATE

REGISTERED PROFESSIONAL ENGINEER
Theresa Aziz Gabriel
No. E15129
Exp. 6-30-14
ELECTRICAL
STATE OF CALIFORNIA

THE STATE OF CALIFORNIA OR ITS OFFICERS OR AGENTS SHALL NOT BE RESPONSIBLE FOR THE ACCURACY OR COMPLETENESS OF SCANNED COPIES OF THIS PLAN SHEET.

TO ACCOMPANY PLANS DATED 2-16-16

2010 REVISED STANDARD PLAN RSP ES-4E

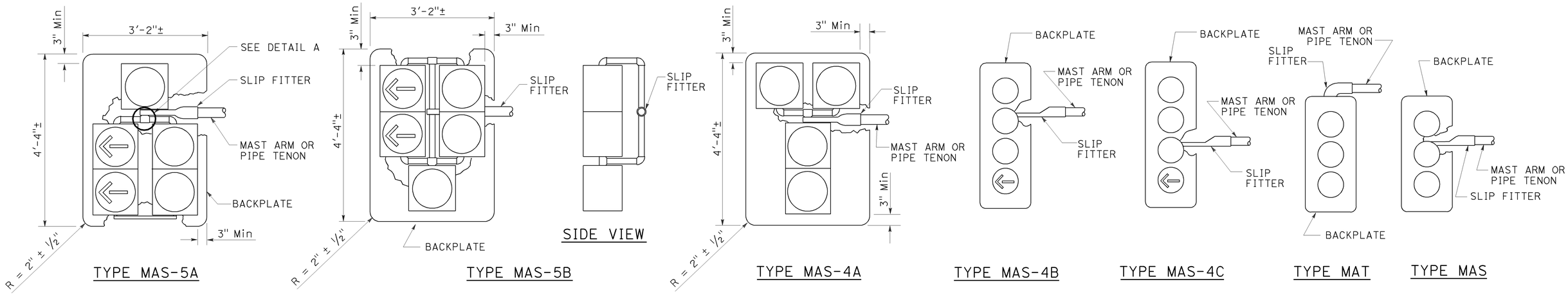

MAST ARM MOUNTINGS

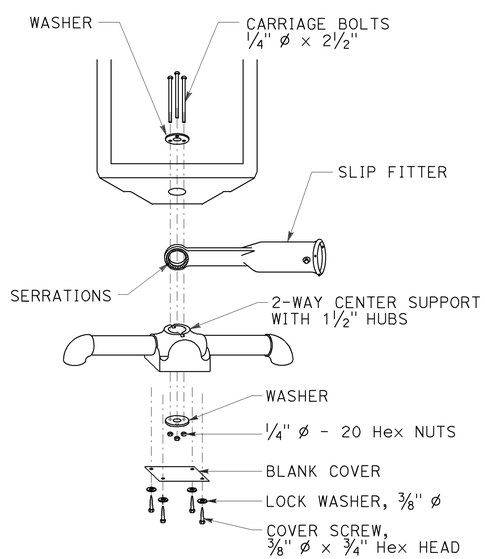

DETAIL A

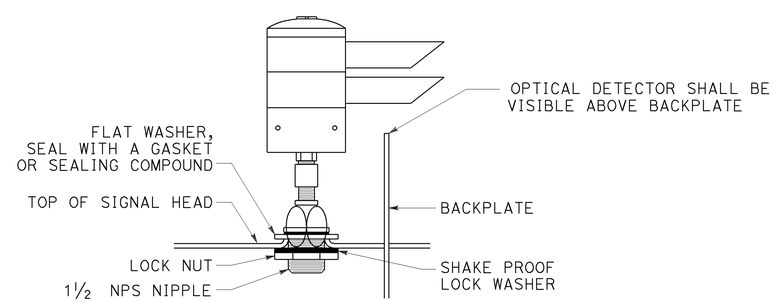

OPTICAL DETECTOR MOUNTING FOR EMERGENCY VEHICLE DETECTION SYSTEM

DETAIL B

STATE OF CALIFORNIA
DEPARTMENT OF TRANSPORTATION

ELECTRICAL SYSTEMS (VEHICULAR SIGNAL HEADS AND OPTICAL DETECTOR MOUNTING)

NO SCALE

RSP ES-4E DATED JULY 19, 2013 SUPERSEDES STANDARD PLAN ES-4E DATED MAY 20, 2011 - 447 OF THE STANDARD PLANS BOOK DATED 2010.

REVISED STANDARD PLAN RSP ES-4E

Dist	COUNTY	ROUTE	POST MILES TOTAL PROJECT	SHEET No.	TOTAL SHEETS
04	SM	82,84	1.4/25.1; 23.1/24.1	182	196

Theresa Gabriel
REGISTERED ELECTRICAL ENGINEER

July 19, 2013
PLANS APPROVAL DATE

REGISTERED PROFESSIONAL ENGINEER
Theresa Aziz Gabriel
No. E15129
Exp. 6-30-14
ELECTRICAL
STATE OF CALIFORNIA

THE STATE OF CALIFORNIA OR ITS OFFICERS OR AGENTS SHALL NOT BE RESPONSIBLE FOR THE ACCURACY OR COMPLETENESS OF SCANNED COPIES OF THIS PLAN SHEET.

TO ACCOMPANY PLANS DATED 2-16-16

2010 REVISED STANDARD PLAN RSP ES-5C

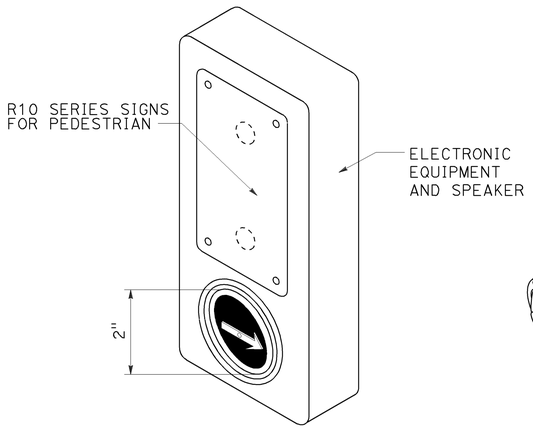

ACCESSIBLE PEDESTRIAN SIGNAL

DETAIL A
(See note 1 to 4)

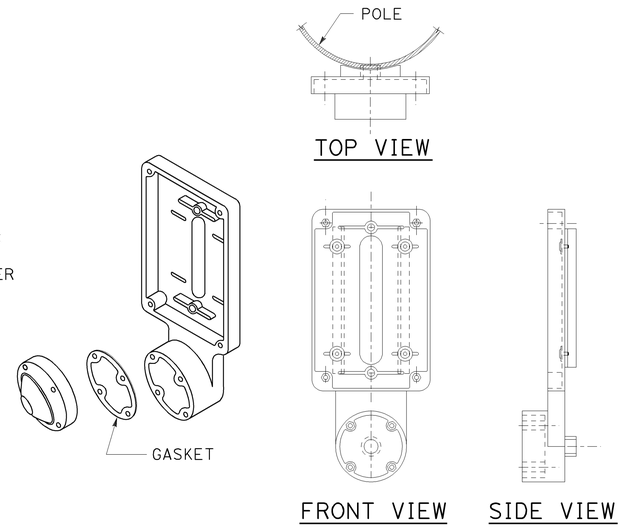

TYPE B PUSH BUTTON ASSEMBLY

DETAIL B
(See note 1 to 4)

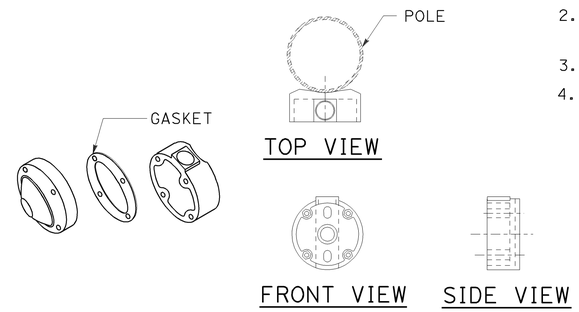

TYPE C PUSH BUTTON ASSEMBLY

DETAIL C
(See note 1 to 4)

NOTES:

1. Back casting shape to fit curvature of pole.
2. Provide cover fitting for top of post, when PBA is mounted on push button assembly post.
3. Install push button on crosswalk side of standard.
4. Use R10 series regulatory signs and plaques for pedestrian and bicycle facilities.

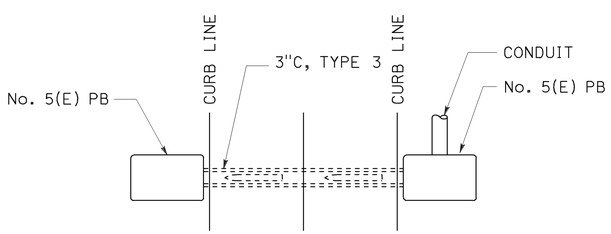

PLAN

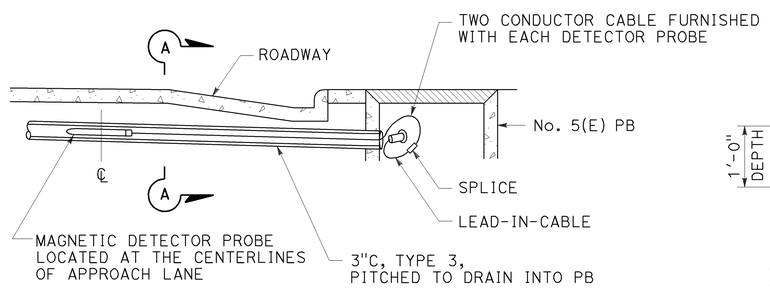

ELEVATION

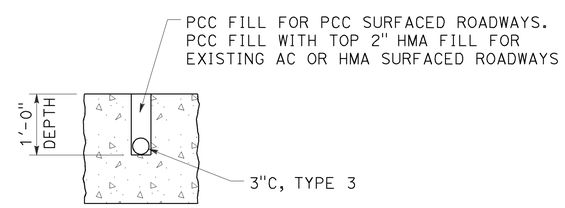

SECTION A-A

MAGNETIC VEHICLE DETECTOR INSTALLATION DETAILS

DETAIL D

STATE OF CALIFORNIA
DEPARTMENT OF TRANSPORTATION

ELECTRICAL SYSTEMS (ACCESSIBLE PEDESTRIAN SIGNAL, PUSH BUTTON ASSEMBLIES AND MAGNETIC VEHICLE DETECTOR)

NO SCALE

RSP ES-5C DATED JULY 19, 2013 SUPERSEDES STANDARD PLAN ES-5C
DATED MAY 20, 2011 - PAGE 450 OF THE STANDARD PLANS BOOK DATED 2010.

REVISED STANDARD PLAN RSP ES-5C

Dist	COUNTY	ROUTE	POST MILES TOTAL PROJECT	SHEET No.	TOTAL SHEETS
04	SM	82,84	1.4/25.1; 23.1/24.1	183	196

Theresa Gabriel
REGISTERED ELECTRICAL ENGINEER

July 19, 2013
PLANS APPROVAL DATE

REGISTERED PROFESSIONAL ENGINEER Theresa Aziz Gabriel No. E15129 Exp. 6-30-14 ELECTRICAL STATE OF CALIFORNIA

THE STATE OF CALIFORNIA OR ITS OFFICERS OR AGENTS SHALL NOT BE RESPONSIBLE FOR THE ACCURACY OR COMPLETENESS OF SCANNED COPIES OF THIS PLAN SHEET.

TO ACCOMPANY PLANS DATED 2-16-16

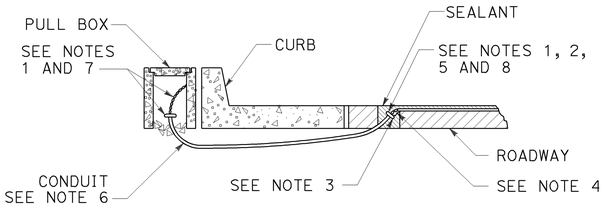

TYPE A
CURB TERMINATION DETAIL

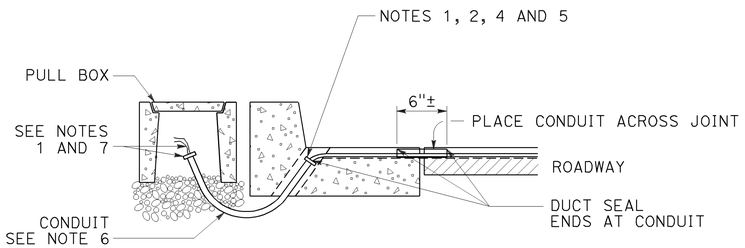

CROSS SECTION

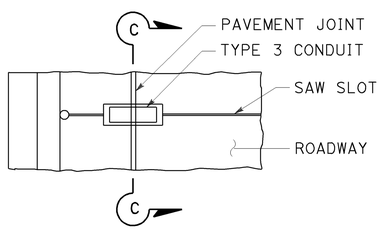

PLAN VIEW

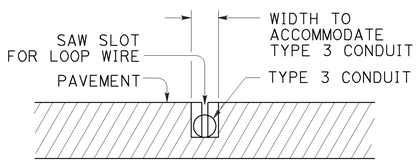

SECTION C-C

TYPE B
CURB TERMINATION DETAIL

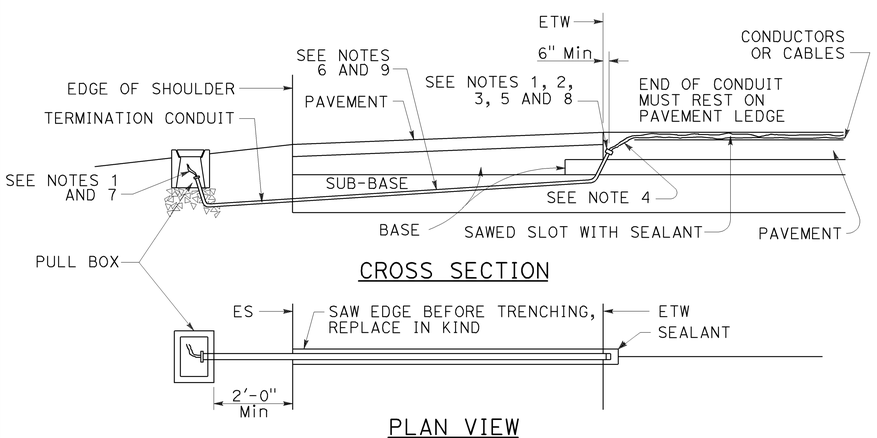

CROSS SECTION

PLAN VIEW

SHOULDER TERMINATION DETAILS

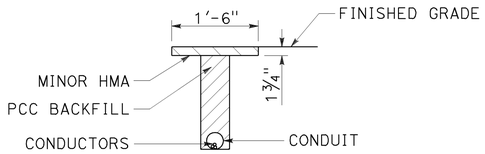

"T" TRENCH
DETAIL T

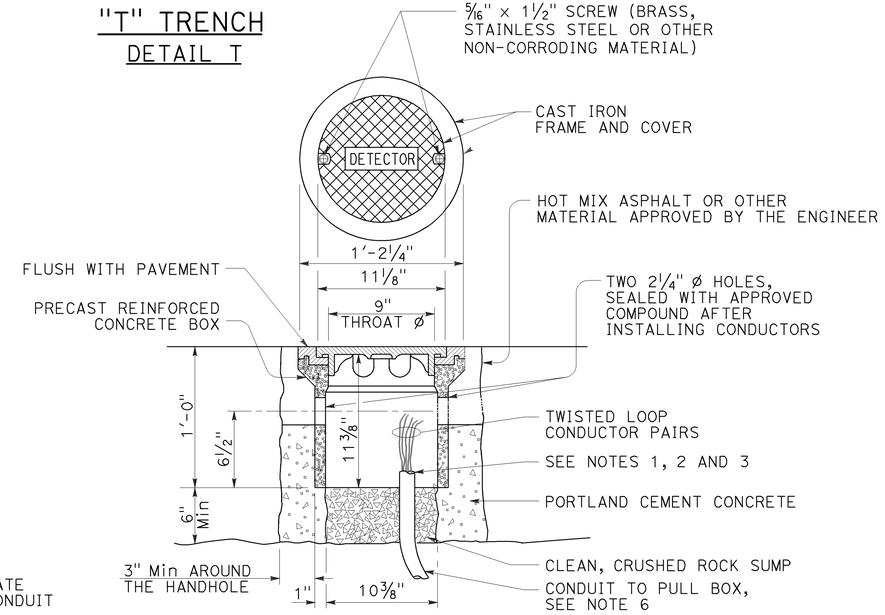

DETECTOR HANDHOLE DETAIL

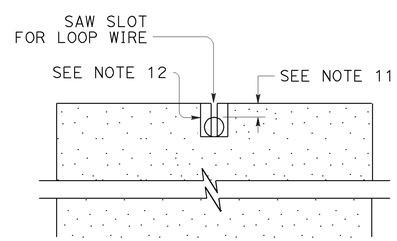

SECTION A-A

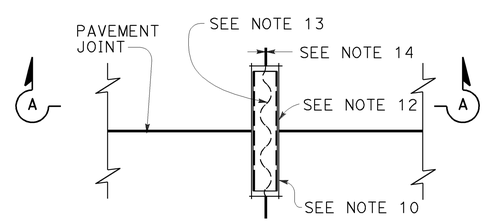

PLAN VIEW

TYPICAL LOOP LEAD-IN DETAIL AT PAVEMENT JOINT

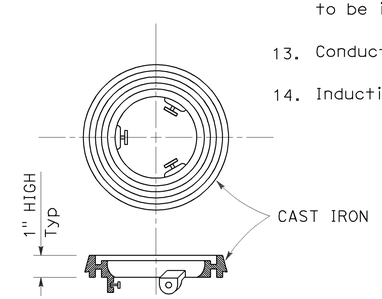

LOCKING GRADE RING

NOTES:

1. Bushing shall be used at end of conduit.
2. Tape detector conductors or cables 3" each side of bushings.
3. Install duct seal compound to each end of termination conduit before installing sealant.
4. Round all sharp edges where detector conductors or cables have to pass.
5. End of conduit shall be 3⅛" below roadway surface.
6. Conduit size / Loop conductors
   - 1"C minimum — 1 to 2 pairs
   - 1½"C minimum — 3 to 4 pairs
   - 2"C minimum — 5 or more pairs
7. Splice detector conductors or cables to detector lead-in-cable.
8. Location of detector handhole when shown on plans.
9. When the shoulder and traveled way are paved with the same material and there is no joint between them, the conduit shall extend only 2'-0" into the shoulder pavement.
10. ¾"C, Type 3 conduit 6" long minimum, plug both ends with duct compound to keep out sealant.
11. ½" Minimum between top of conduit and pavement surface.
12. Sawcut shall not exceed 1" in width and ⅛" longer than conduit to be installed.
13. Conductors with ½" minimum slack inside conduit.
14. Inductive loop detector saw slot.

STATE OF CALIFORNIA
DEPARTMENT OF TRANSPORTATION

ELECTRICAL SYSTEMS (CURB TERMINATION AND HANDHOLE)

NO SCALE

RSP ES-5D DATED JULY 19, 2013 SUPERSEDES STANDARD PLAN ES-5D DATED MAY 20, 2011 - PAGE 451 OF THE STANDARD PLANS BOOK DATED 2010.

REVISED STANDARD PLAN RSP ES-5D

2010 REVISED STANDARD PLAN RSP ES-5D

7-9-13

Dist	COUNTY	ROUTE	POST MILES TOTAL PROJECT	SHEET No.	TOTAL SHEETS
04	SM	82,84	1.4/25.1; 23.1/24.1	184	196

REGISTERED CIVIL ENGINEER

October 30, 2015
PLANS APPROVAL DATE

REGISTERED PROFESSIONAL ENGINEER
Stanley P. Johnson
No. C57793
Exp. 3-31-16
CIVIL
STATE OF CALIFORNIA

THE STATE OF CALIFORNIA OR ITS OFFICERS OR AGENTS SHALL NOT BE RESPONSIBLE FOR THE ACCURACY OR COMPLETENESS OF SCANNED COPIES OF THIS PLAN SHEET.

TO ACCOMPANY PLANS DATED 2-16-16

2010 REVISED STANDARD PLAN RSP ES-6A

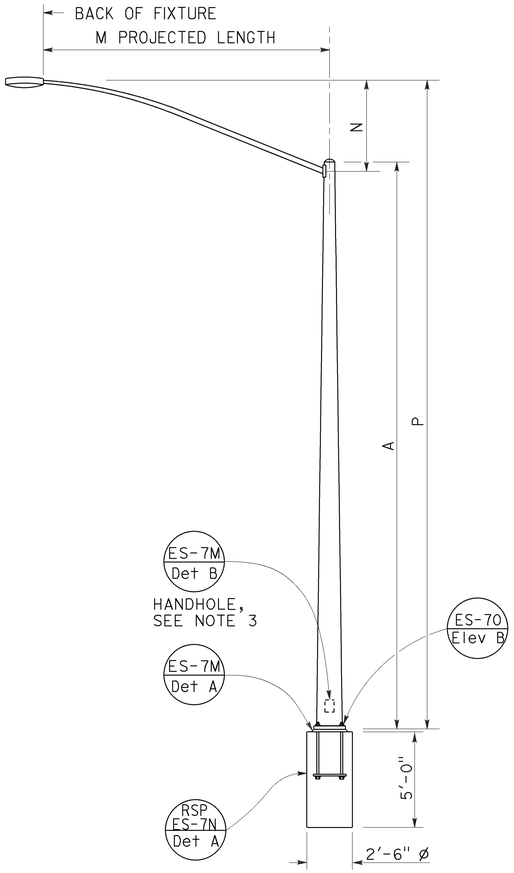

TYPE 15 AND TYPE 21
ELEVATION A

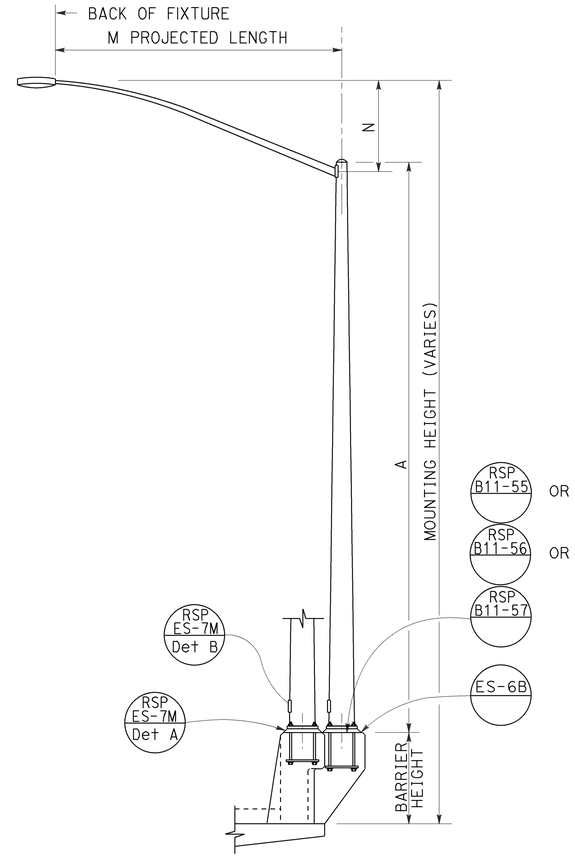

TYPE 15 AND TYPE 21 BARRIER RAIL MOUNTED
ELEVATION B

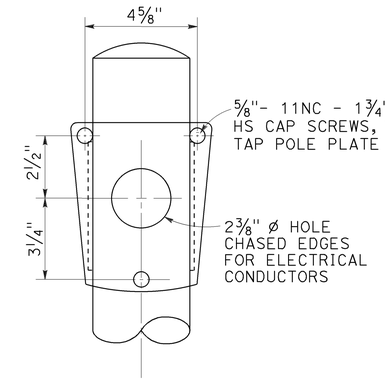

FRONT VIEW

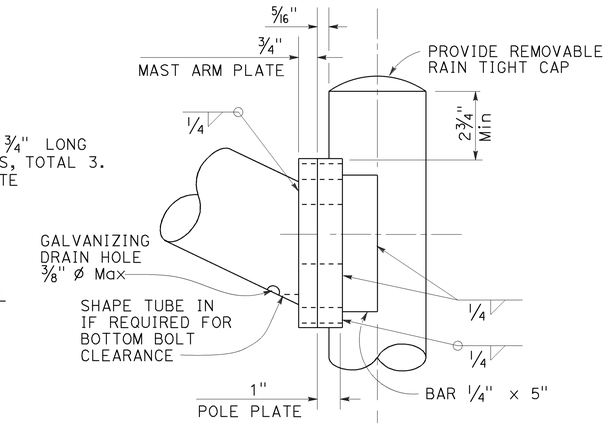

SIDE VIEW

LUMINAIRE MAST ARM CONNECTION
DETAIL R

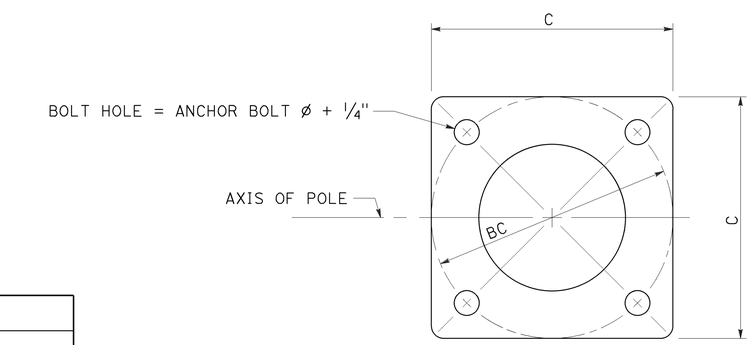

BASE PLATE
DETAIL A

POLE TYPE	POLE DATA				BASE PLATE DATA			
	A HEIGHT	Min OD BASE	Min OD TOP	WALL THICKNESS	C	BC = BOLT CIRCLE	THICKNESS	ANCHOR BOLT SIZE
15	30'-0"	8"	3 11/16"	0.1196"	1'-0"	1'-0"	2"	1" ø x 3'-0" *
21	35'-0"	8 5/8"	3 9/16"	0.1793"				1 1/4" ø x 3'-0" *

* FOR BARRIER RAIL BOLTS, SEE STANDARD PLAN ES-6B.

LUMINAIRE MAST ARM DATA					
M PROJECTED LENGTH	N RISE	Min OD AT POLE	NOMINAL THICKNESS	P TYPE 15	P TYPE 21
6'-0"	2'-0"±	3 1/4"	0.1196"	31'-6"±	36'-6"±
8'-0"	2'-6"±	3 1/2"		32'-0"±	37'-0"±
10'-0"	3'-3"±	3 7/8"		32'-9"±	37'-9"±
12'-0"	4'-3"±			33'-9"±	38'-9"±
15'-0"	4'-9"±	4 1/4"		34'-3"±	39'-3"±

NOTES:

1. ▭ Indicates mast arm length to be used unless otherwise noted on the plans.
2. For Type 15-SB, use Type 15 standard with Type 30 slip base plate details, see Revised Standard Plan RSP ES-6F.
3. Handhole shall be located on the downstream side of traffic.
4. For additional notes and details, see Revised Standard Plans RSP ES-7M and RSP ES-7N.

STATE OF CALIFORNIA
DEPARTMENT OF TRANSPORTATION

ELECTRICAL SYSTEMS (LIGHTING STANDARD, TYPES 15 AND 21)

NO SCALE

RSP ES-6A DATED OCTOBER 30, 2015 SUPERSEDES STANDARD PLAN ES-6A DATED MAY 20, 2011 - PAGE 452 OF THE STANDARD PLANS BOOK DATED 2010.

REVISED STANDARD PLAN RSP ES-6A

Dist	COUNTY	ROUTE	POST MILES TOTAL PROJECT	SHEET No.	TOTAL SHEETS
04	SM	82,84	1.4/25.1; 23.1/24.1	185	196

REGISTERED CIVIL ENGINEER

July 19, 2013
PLANS APPROVAL DATE

REGISTERED PROFESSIONAL ENGINEER
Stanley P. Johnson
No. C57793
Exp. 3-31-14
CIVIL
STATE OF CALIFORNIA

THE STATE OF CALIFORNIA OR ITS OFFICERS OR AGENTS SHALL NOT BE RESPONSIBLE FOR THE ACCURACY OR COMPLETENESS OF SCANNED COPIES OF THIS PLAN SHEET.

TO ACCOMPANY PLANS DATED 2-16-16

2010 REVISED STANDARD PLAN RSP ES-7A

NOTES:

1. For additional notes, details and data for Type 15TS and Type 21TS Standards, see Standard Plan ES-6A.
2. Handhole shall be located on the downstream side of traffic.

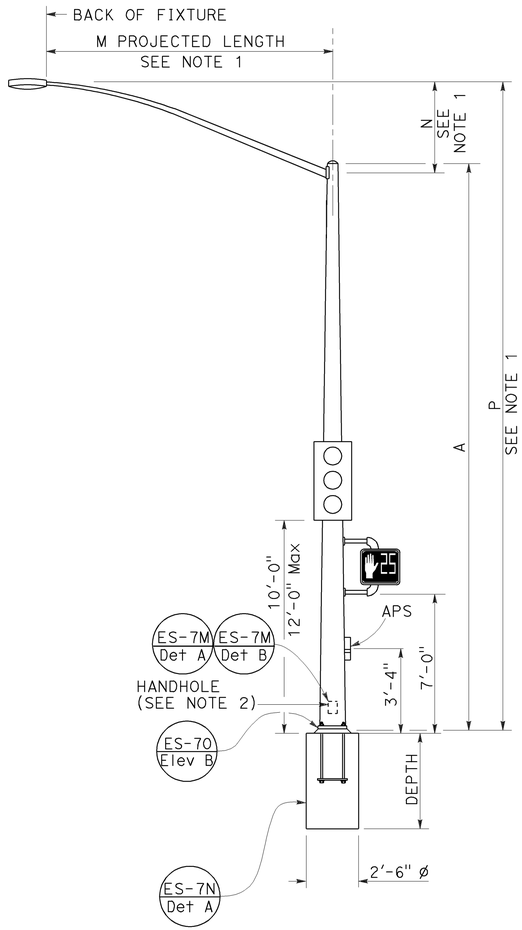

TYPE 15TS AND 21TS STANDARD

ELEVATION A

(See Note 1)

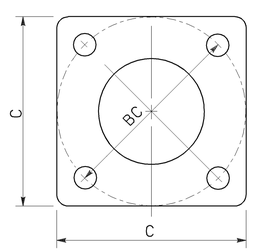

BASE PLATE

TYPE 15TS AND 21TS

DETAIL A

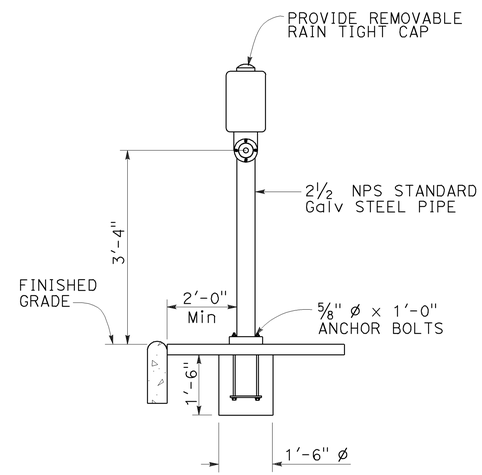

ELEVATION

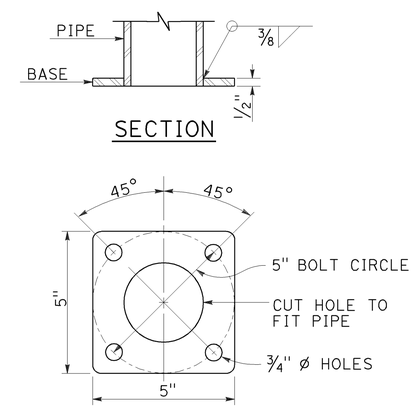

BASE PLATE

PBA POST

PUSH BUTTON ASSEMBLY POST

DETAIL B

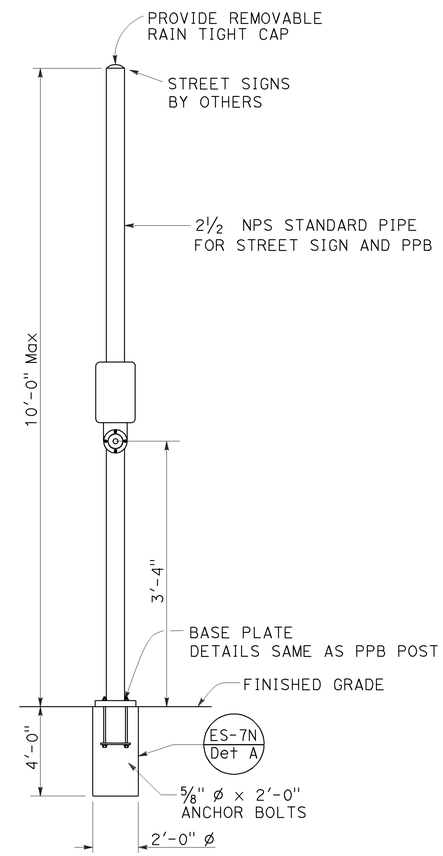

COMBINED STREET SIGN
PUSH BUTTON ASSEMBLY POST

DETAIL C

POLE TYPE	POLE DATA				BASE PLATE DATA				CIDH
	A HEIGHT	Min OD BASE	Min OD TOP	WALL THICKNESS	C	BC = BOLT CIRCLE	THICKNESS	ANCHOR BOLT SIZE	DEPTH
15TS	30'-0"	8"	3 11/16"	0.1793"	1'-1½"	1'-0"	2"	1½" ø x 42"	7'-6"
21TS	35'-0"	9⅜"	3 9/16"		1'-3"	1'-2"			8'-6"

STATE OF CALIFORNIA
DEPARTMENT OF TRANSPORTATION

ELECTRICAL SYSTEMS (SIGNAL AND LIGHTING STANDARD, TYPE TS, AND PUSH BUTTON ASSEMBLY POST)

NO SCALE

RSP ES-7A DATED JULY 19, 2013 SUPERSEDES STANDARD PLAN ES-7A DATED MAY 20, 2011 - PAGE 462 OF THE STANDARD PLANS BOOK DATED 2010.

REVISED STANDARD PLAN RSP ES-7A

Dist	COUNTY	ROUTE	POST MILES TOTAL PROJECT	SHEET No.	TOTAL SHEETS
04	SM	82,84	1.4/25.1; 23.1/24.1	186	196

REGISTERED CIVIL ENGINEER

October 30, 2015
PLANS APPROVAL DATE

REGISTERED PROFESSIONAL ENGINEER Stanley P. Johnson No. C57793 Exp. 3-31-16 CIVIL STATE OF CALIFORNIA

THE STATE OF CALIFORNIA OR ITS OFFICERS OR AGENTS SHALL NOT BE RESPONSIBLE FOR THE ACCURACY OR COMPLETENESS OF SCANNED COPIES OF THIS PLAN SHEET.

TO ACCOMPANY PLANS DATED 2-16-16

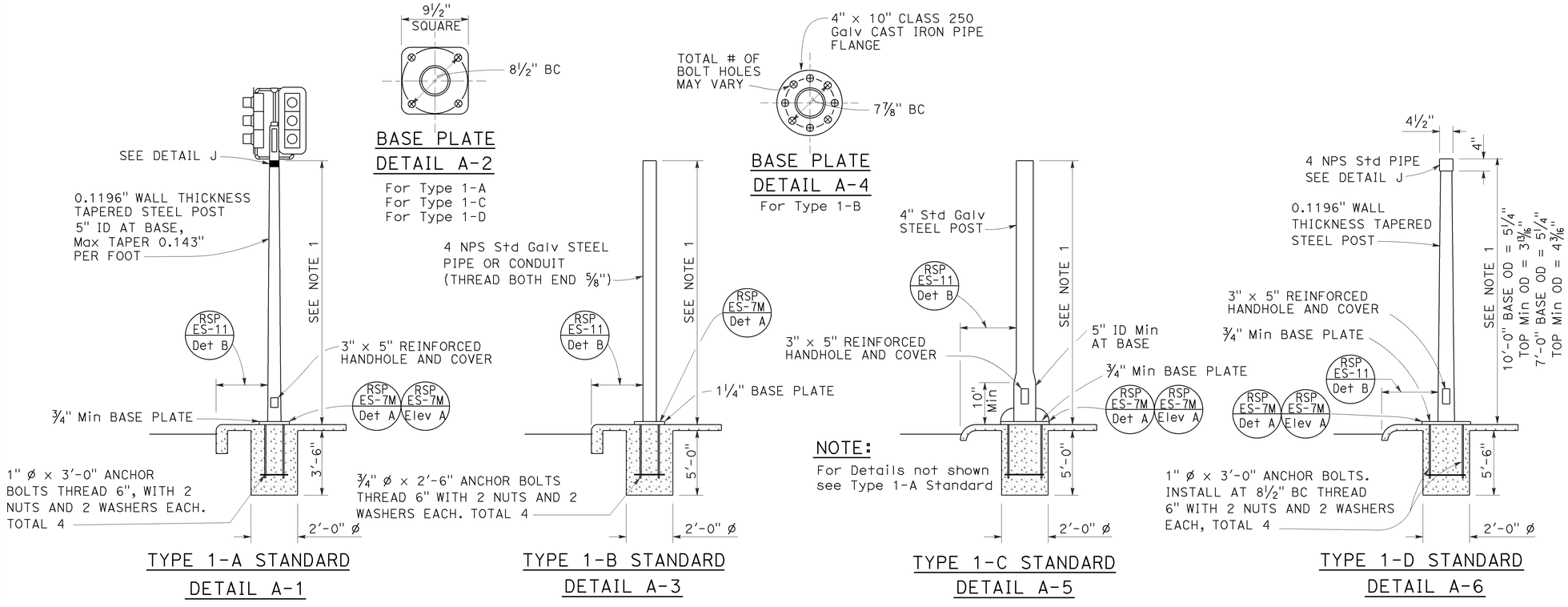

TYPE 1 SIGNAL STANDARDS
DETAIL A

NOTES:

1. Standards shall be 10'-0" ± 2" for vehicle signals and 7'-0" ± 2" for pedestrian signals unless shorter pole is noted on project plans.
2. Top of standards shall be 4½" OD.
3. Conduits shall extend 2" maximum above finished surface of foundation and for Types 1-A, 1-C and 1-D shall be sloped toward handhole.
4. Anchor bolts shall be bonded to conduit or grounding conductor.
5. For additional notes and details, see Revised Standard Plans RSP ES-7M and RSP ES-7N.
6. Pour foundation concrete against undisturbed soil.
7. For standards with handhole, locate in the downstream side of traffic.
8. Coupling nuts to be used only when shown or specified on project plans.

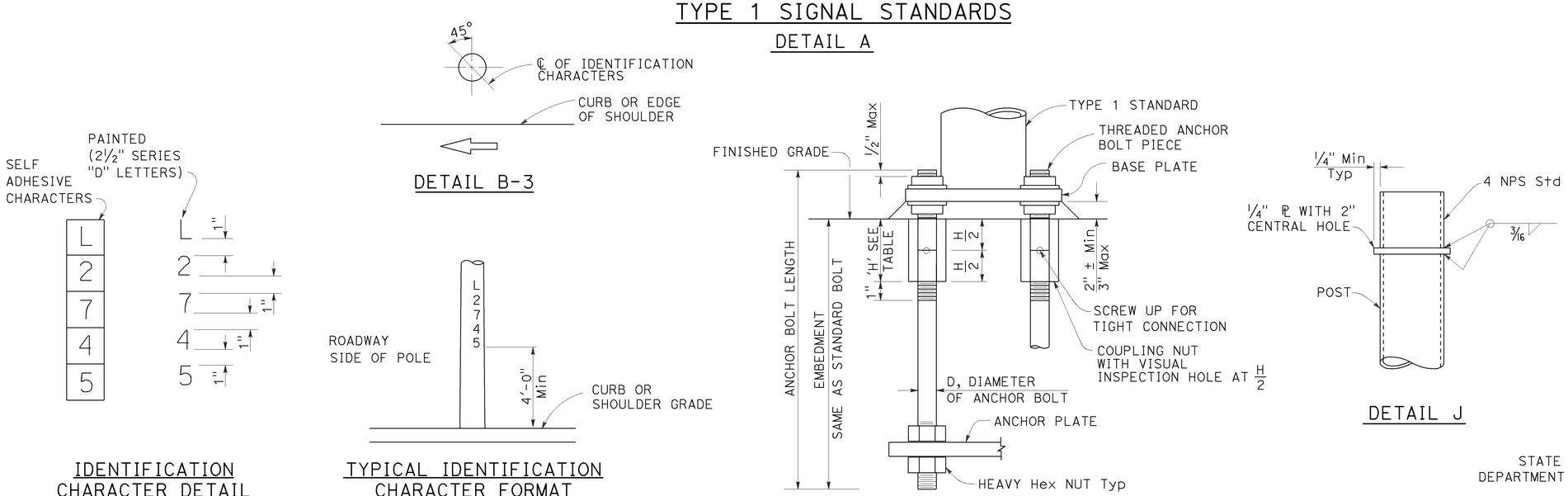

IDENTIFICATION CHARACTER DETAIL
DETAIL B-1

TYPICAL IDENTIFICATION CHARACTER FORMAT
DETAIL B-2

LOCATION OF EQUIPMENT IDENTIFICATION CHARACTERS ON STANDARDS AND POSTS
DETAIL B

ANCHOR BOLTS WITH SLEEVE NUTS
DETAIL C
(See Note 8)

COUPLING NUT TABLE	
BOLT DIAMETER	NUT TABLE THICKNESS 'H'
¾"	2¼"
1"	3'

STATE OF CALIFORNIA
DEPARTMENT OF TRANSPORTATION

ELECTRICAL SYSTEMS (SIGNAL AND LIGHTING STANDARD, TYPE 1 AND EQUIPMENT IDENTIFICATION CHARACTERS)

NO SCALE

RSP ES-7B DATED OCTOBER 30, 2015 SUPERSEDES STANDARD PLAN ES-7B DATED MAY 20, 2011 - PAGE 463 OF THE STANDARD PLANS BOOK DATED 2010.

REVISED STANDARD PLAN RSP ES-7B

2010 REVISED STANDARD PLAN RSP ES-7B

10-8-15

Dist	COUNTY	ROUTE	POST MILES TOTAL PROJECT	SHEET No.	TOTAL SHEETS
04	SM	82,84	1.4/25.1; 23.1/24.1	187	196

REGISTERED CIVIL ENGINEER

July 19, 2013
PLANS APPROVAL DATE

Stanley P. Johnson No. C57793 Exp. 3-31-14 CIVIL — REGISTERED PROFESSIONAL ENGINEER — STATE OF CALIFORNIA

THE STATE OF CALIFORNIA OR ITS OFFICERS OR AGENTS SHALL NOT BE RESPONSIBLE FOR THE ACCURACY OR COMPLETENESS OF SCANNED COPIES OF THIS PLAN SHEET.

TO ACCOMPANY PLANS DATED 2-16-16

NOTE:
Handhole shall be located on the downstream side of traffic.

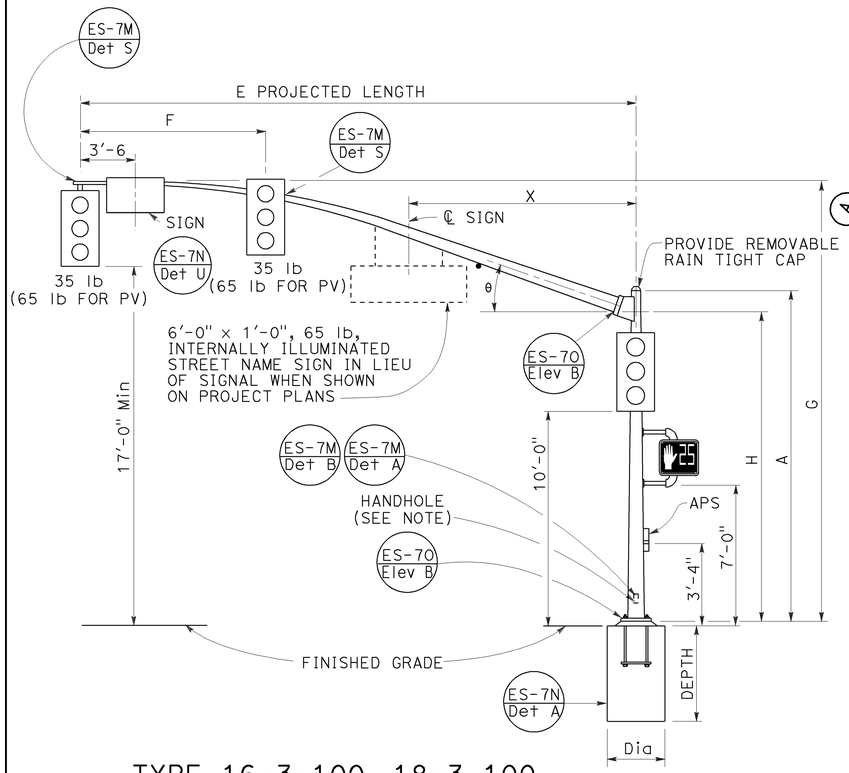

TYPE 16-3-100, 18-3-100, 23-3-100, 27-3-100
ELEVATION A

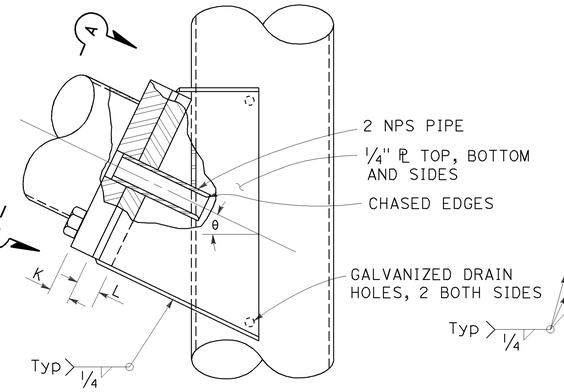

ELEVATION C

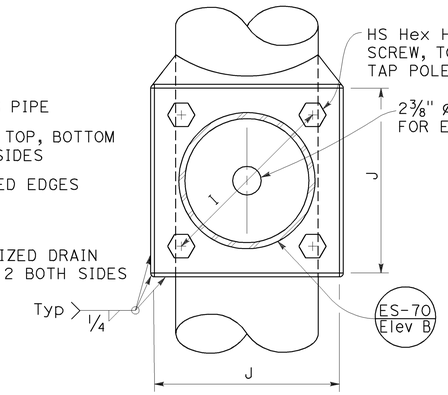

VIEW A-A

SIGNAL MAST ARM CONNECTION
DETAIL A

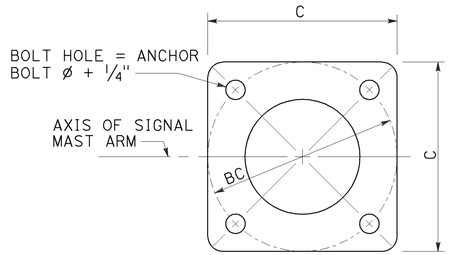

BASE PLATE
DETAIL B

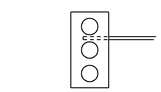

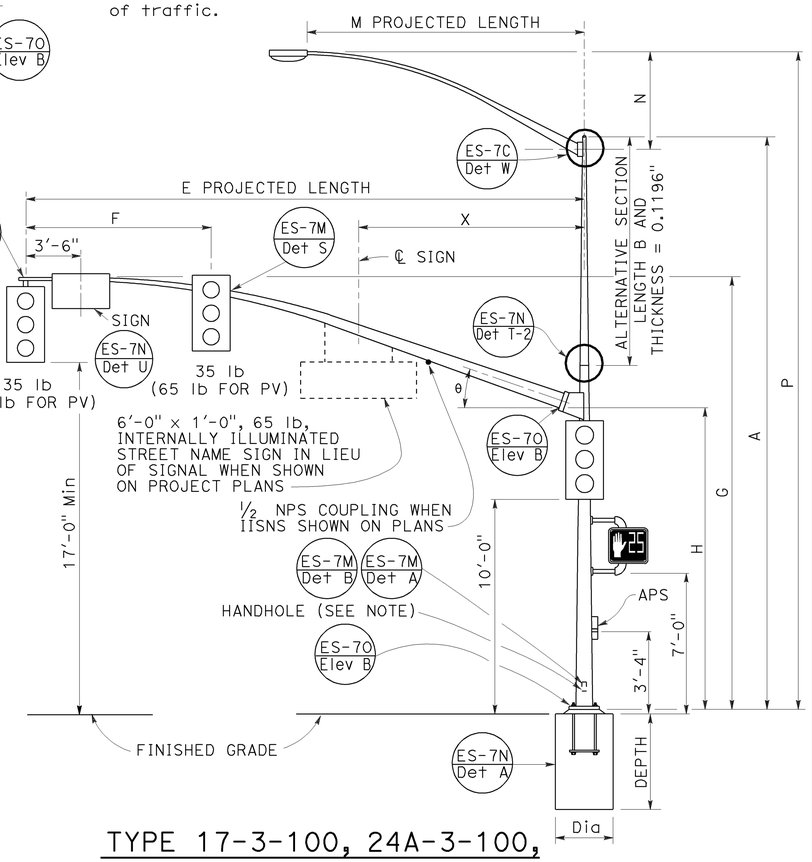

TYPE 17-3-100, 24A-3-100, 19-3-100, 26-3-100, 19A-3-100, 26A-3-100, 24-3-100
ELEVATION B

SIGNAL MAST ARM DATA

E PROJECTED LENGTH	F Min SPACING	G MOUNTING HEIGHT	H	Min OD AT POLE	THICKNESS	I BOLT CIRCLE	HS CAP SCREWS	J PLATE SIZE	K MAST ARM ℙ THICKNESS	L POLE ℙ THICKNESS	θ	X Max
15'-0"	8'-0"	21'-8"±	17'-6"	7 3/8"	0.1793"	12"	1 1/4"-7NC-3"	1'-0"	1 1/4"	1 1/2"	23°	-
20'-0"		21'-8"±		7 3/8"								
25'-0"	12'-0"	22'-8"±	16'-0"	7 3/8"	0.2391"							10'-6"
30'-0"		23'-0"±		8"								
35'-0"	14'-0"			8 3/4"		13"		1'-1"	1 1/2"	1 3/4"	21°	
40'-0"	15'-0"			9 3/8"							15°	13'-0"
45'-0"		23'-8"±		10 1/16"								

LUMINAIRE MAST ARM DATA

M PROJECTED LENGTH	N RISE	Min OD AT POLE	THICKNESS	P MOUNTING HEIGHT 30'-0" POLE	P MOUNTING HEIGHT 35'-0" POLE
6'-0"	2'-0"±	3 1/4"	0.1196"	31'-6"±	36'-6"±
8'-0"	2'-6"±	3 1/2"		32'-0"±	37'-0"±
10'-0"	3'-3"±	3 7/8"		32'-9"±	37'-9"±
12'-0"	4'-3"±			33'-9"±	38'-9"±
15'-0"	4'-9"±	4 1/4"		34'-3"±	39'-3"±

POLE DATA / BASE PLATE DATA / CIDH PILE FOUNDATION

POLE TYPE	LOAD CASE	WIND VELOCITY (mph)	A HEIGHT	Min OD BASE	Min OD TOP	THICKNESS	ALTERNATIVE SECTION B LENGTH	ALTERNATIVE SECTION BOTTOM	ALTERNATIVE SECTION TOP	C	BC = BOLT CIRCLE	THICKNESS	ANCHOR BOLT SIZE	LUMINAIRE MAST ARM	SIGNAL MAST ARM	DIAMETER	DEPTH	REINFORCED
16-3-100	3	100	18'-6"	10 3/4"	8 1/16"	0.1793"	NONE			1'-5 1/2"	1'-5 1/2"	3"	1 1/2" ø x 42"	NONE	15'-0", [20'-0"]	3'-0"	8'-6"	YES
17-3-100			30'-0"		6 7/16"		10'-0"	7 7/8"	6 7/16"					6'-15' [12'-0"]				
18-3-100			17'-0"	1'-0"	8 5/16"	0.2391"	NONE			1'-7"			2" ø x 42"	NONE	25'-0", [30'-0"]		9'-6"	
19-3-100			30'-0"		7 11/16"		10'-0"	9 1/8"	7 11/16"					6'-15' [12'-0"]			11'-0"	
19A-3-100			35'-0"		6 15/16"		15'-0"		6 15/16"					6'-15' [15'-0"]				
23-3-100			17'-0"		9 9/16"		NONE							NONE	35'-0"			
24-3-100			30'-0"		7 11/16"		10'-0"	9 1/8"	7 11/16"					6'-15' [12'-0"]				
24A-3-100			35'-0"		6 15/16"		15'-0"		6 15/16"					6'-15' [15'-0"]				
26-3-100			30'-0"	1'-2"	7 13/16"	0.3125"	10'-0"	9 1/4"	7 13/16"	1'-11"	1'-9"		2 1/2" ø x 42"	6'-15' [12'-0"]	40'-0", [45'-0"]	3'-6"	12'-0"	
26A-3-100			35'-0"		7 1/16"		15'-0"		7 1/16"					6'-15' [15'-0"]				
27-3-100			17'-0"		9 11/16"		NONE							NONE				

[ ] INDICATES MAST ARM LENGTH TO BE USED UNLESS OTHERWISE NOTED ON PLANS.

STATE OF CALIFORNIA
DEPARTMENT OF TRANSPORTATION

ELECTRICAL SYSTEMS (SIGNAL AND LIGHTING STANDARD, CASE 3 SIGNAL MAST ARM LOADING, WIND VELOCITY=100 MPH AND SIGNAL MAST ARM LENGTHS 15' TO 45')

NO SCALE

RSP 7E DATED JULY 19, 2013 SUPERSEDES STANDARD PLAN 7E
DATED MAY 20, 2011 - PAGE 466 OF THE STANDARD PLANS BOOK DATED 2010.

REVISED STANDARD PLAN RSP ES-7E

2010 REVISED STANDARD PLAN RSP ES-7E

6-17-13

Dist	COUNTY	ROUTE	POST MILES TOTAL PROJECT	SHEET No.	TOTAL SHEETS
04	SM	82,84	1.4/25.1; 23.1/24.1	188	196

REGISTERED CIVIL ENGINEER

July 19, 2013
PLANS APPROVAL DATE

REGISTERED PROFESSIONAL ENGINEER Stanley P. Johnson No. C57793 Exp. 3-31-14 CIVIL STATE OF CALIFORNIA

THE STATE OF CALIFORNIA OR ITS OFFICERS OR AGENTS SHALL NOT BE RESPONSIBLE FOR THE ACCURACY OR COMPLETENESS OF SCANNED COPIES OF THIS PLAN SHEET.

NOTE:

TO ACCOMPANY PLANS DATED 2-16-16

1. Handhole shall be located on the downstream side of traffic.

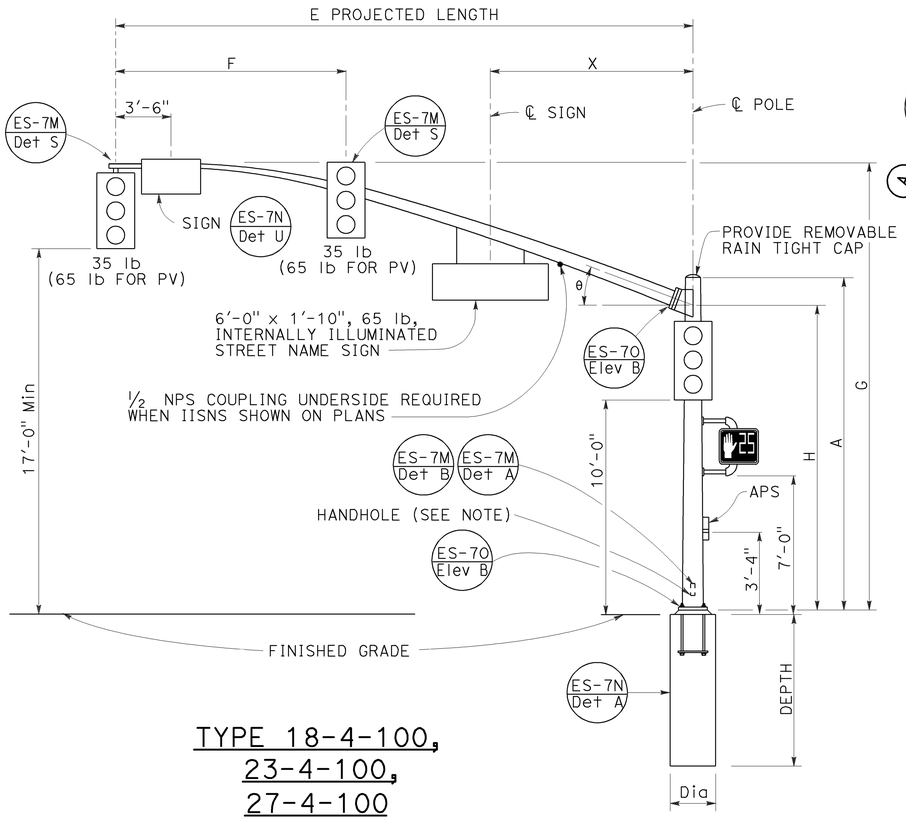

TYPE 18-4-100,
23-4-100,
27-4-100
ELEVATION A

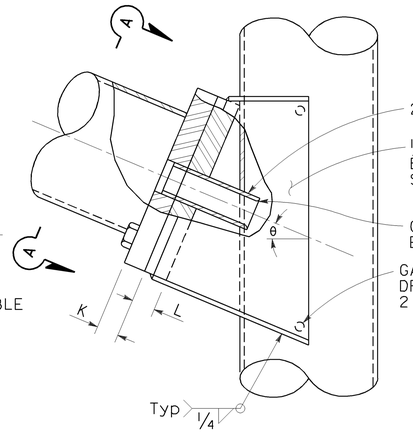

ELEVATION C

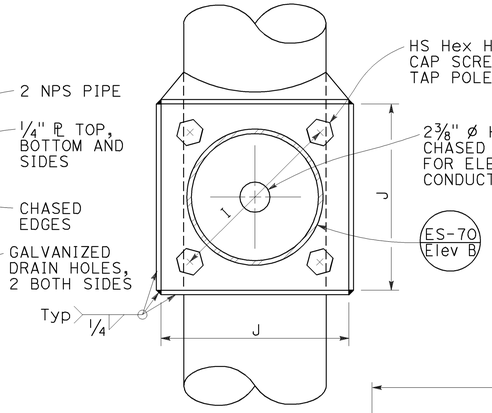

VIEW A-A

SIGNAL MAST ARM CONNECTION
DETAIL A

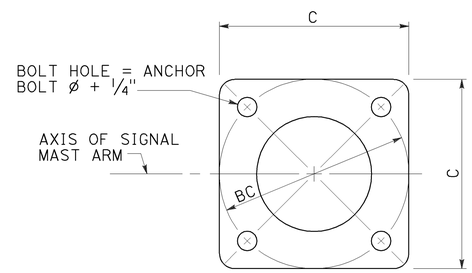

BASE PLATE
DETAIL B

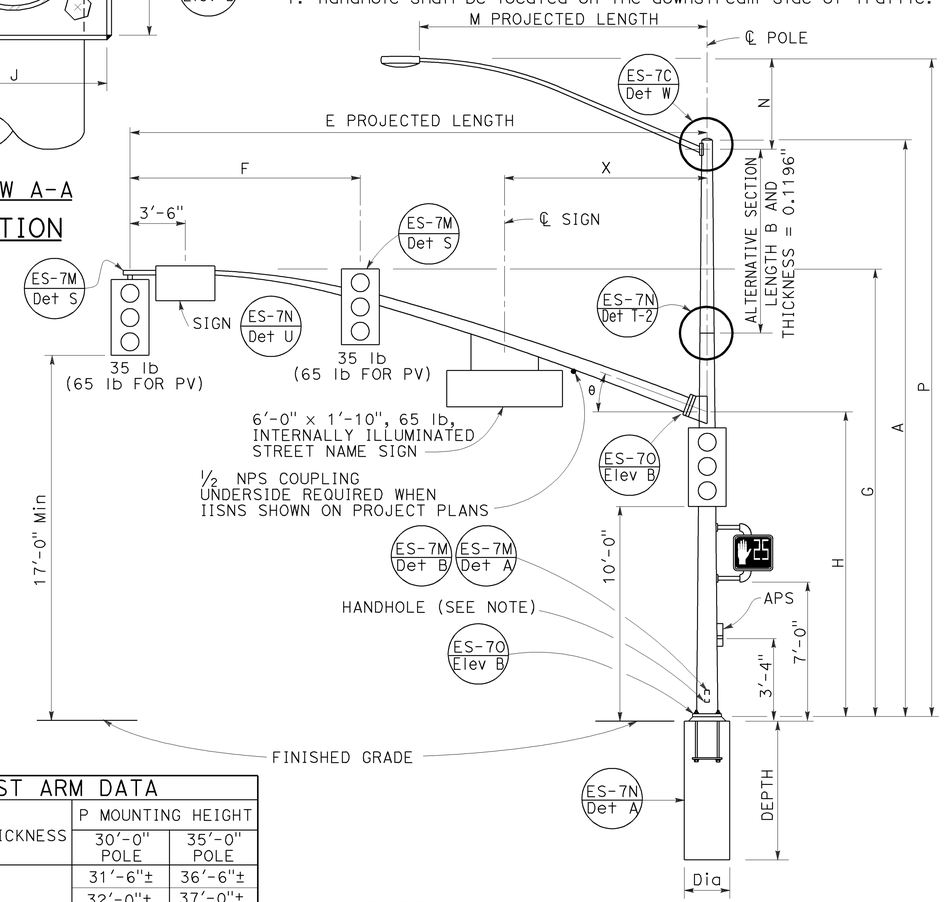

TYPE 19-4-100, 19A-4-100,
24-4-100, 24A-4-100,
26-4-100, 26A-4-100
ELEVATION B

SIGNAL MAST ARM DATA

E PROJECTED LENGTH	F Min SPACING	G MOUNTING HEIGHT	H	Min OD AT POLE	THICKNESS	I BOLT CIRCLE	HS CAP SCREWS	J PLATE SIZE	K MAST ARM PL THICKNESS	L POLE PL THICKNESS	θ	X Max
25'-0"	10'-0"	22'-8"±	16'-0"	7⅜"	0.2391"	12"	1¼"-7NC-3"	1'-0"	1¼"	1½"	23°	10'-6"
30'-0"	12'-0"	23'-0"±		8"								
35'-0"	14'-0"			8 11/16"		13½"		1'-1½"	1½"	1¾"	21°	
40'-0"	15'-0"			9⅜"							15°	13'-0"
45'-0"		23'-8"±		10¼"								

LUMINAIRE MAST ARM DATA

M PROJECTED LENGTH	N RISE	Min OD AT POLE	THICKNESS	P MOUNTING HEIGHT 30'-0" POLE	P MOUNTING HEIGHT 35'-0" POLE
6'-0"	2'-0"±	3¼"	0.1196"	31'-6"±	36'-6"±
8'-0"	2'-6"±	3½"		32'-0"±	37'-0"±
10'-0"	3'-3"±	3⅞"		32'-9"±	37'-9"±
12'-0"	4'-3"±			33'-9"±	38'-9"±
15'-0"	4'-9"±	4¼"		34'-3"±	39'-3"±

POLE DATA / BASE PLATE DATA / CIDH PILE FOUNDATION

POLE TYPE	LOAD CASE	WIND VELOCITY (mph)	A HEIGHT	Min OD BASE	Min OD TOP	THICKNESS	ALTERNATIVE SECTION B LENGTH	ALTERNATIVE SECTION BOTTOM	ALTERNATIVE SECTION TOP	C	BC = BOLT CIRCLE	THICKNESS	ANCHOR BOLT SIZE	LUMINAIRE MAST ARM	SIGNAL MAST ARM	CIDH Dia	CIDH DEPTH	CIDH REINFORCED
18-4-100	4	100	17'-0"	12⅛"	9 9/16"	0.3125"	NONE	9⅛"	7 11/16"	1'-7"	1'-5½"	3"	2" Ø x 42"	NONE	25'-0", [30'-0"]	3'-0"	11'-0"	YES
19-4-100			30'-0"		7 11/16"		10'-0"							6'-15' [12'-0"]				
19A-4-100			35'-0"		6 15/16"		15'-0'		6 15/16"					6'-15' [15'-0"]				
23-4-100			17'-0"		9 9/16"		NONE							NONE	35'-0"			
24-4-100			30'-0"		7 11/16"		10'-0"	9⅛"	7 11/16"					6'-15' [12'-0"]				
24A-4-100			35'-0"		6 15/16"		15'-0"		6 15/16"					6'-15' [15'-0"]				
26-4-100			30'-0"	14"	8 3/16"		10'-0"	9⅝"	8 3/16"	23"	21"		2½" Ø x 42"	6'-15' [12'-0"]	40'-0", [45'-0"]	3'-6"	12'-0"	
26A-4-100			35'-0"		7 7/16"		15'-0"		7 7/16"					6'-15' [15'-0"]				
27-4-100			17'-0"		10 1/16"		NONE							NONE				

[ ] INDICATES MAST ARM LENGTH TO BE USED UNLESS OTHERWISE NOTED ON PLANS.

STATE OF CALIFORNIA
DEPARTMENT OF TRANSPORTATION

ELECTRICAL SYSTEMS (SIGNAL AND LIGHTING STANDARD, CASE 4 SIGNAL MAST ARM LOADING, WIND VELOCITY=100 MPH AND SIGNAL MAST ARM LENGTHS 25' TO 45')

NO SCALE

RSP ES-7F DATED JULY 19, 2013 SUPERSEDES STANDARD PLAN ES-7F
DATED MAY 20, 2011 - PAGE 467 OF THE STANDARD PLANS BOOK DATED 2010.

REVISED STANDARD PLAN RSP ES-7F

2010 REVISED STANDARD PLAN RSP ES-7F

6-18-13

Dist	COUNTY	ROUTE	POST MILES TOTAL PROJECT	SHEET No.	TOTAL SHEETS
04	SM	82,84	1.4/25.1, 23.1/24.1	189	196

REGISTERED CIVIL ENGINEER

October 30, 2015
PLANS APPROVAL DATE

REGISTERED PROFESSIONAL ENGINEER Stanley P. Johnson No. C57793 Exp. 3-31-16 CIVIL STATE OF CALIFORNIA

THE STATE OF CALIFORNIA OR ITS OFFICERS OR AGENTS SHALL NOT BE RESPONSIBLE FOR THE ACCURACY OR COMPLETENESS OF SCANNED COPIES OF THIS PLAN SHEET.

TO ACCOMPANY PLANS DATED 2-16-16

2010 REVISED STANDARD PLAN RSP ES-7M

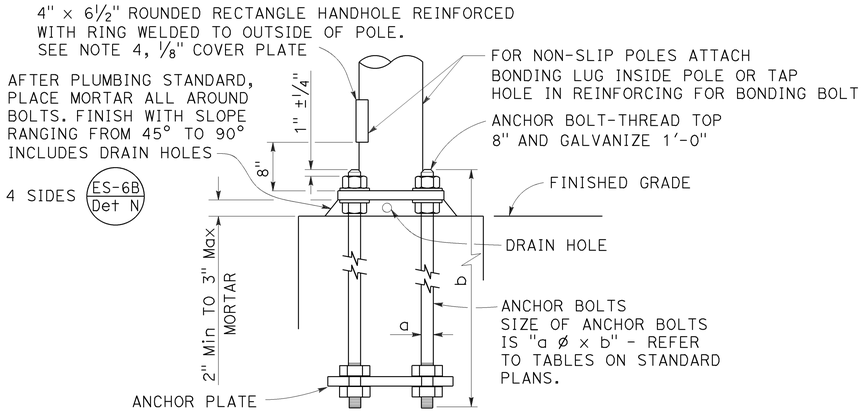

HANDHOLE AND ANCHORAGE
DETAIL A

IDENTIFICATION NUMBER

1. Attach a stamped metal tag with pole's identification number above the handhole. ¼" high number, minimum.
2. Attach a stamped metal tag with mast arm's identification number to the bottom of the signal mast arm near the pole plate. ¼" high number, minimum.

Type — Load case (Use SL for special load case) — Design wind velocity (mph) — Signal mast arm length (ft) { Near handhole: Maximum signal mast arm length for pole type; Near pole plate: Installed signal mast arm length } — Standard plan year — Only for poles or mast arms using Detail F — Only for poles or mast arms using ES-7D

26A - 3 - 100 - 45 - 10 - F or FB

SAMPLE IDENTIFICATION NUMBER

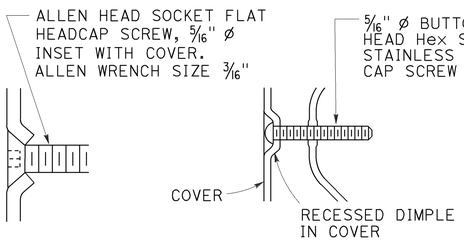

TYPICAL DETAIL
DETAIL B-1

ALTERNATIVE DETAIL
DETAIL B-2

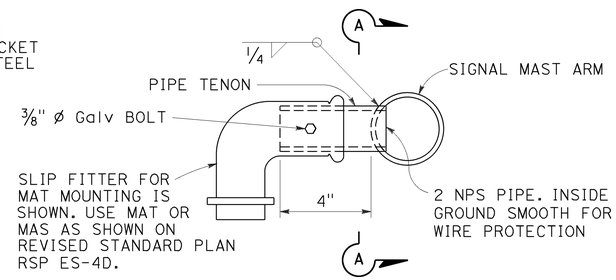

SIDE TENON
DETAIL S-1

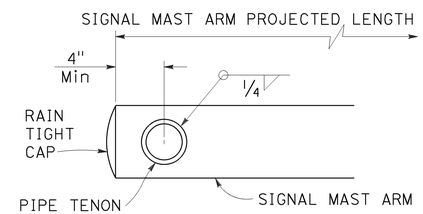

SECTION A-A

PIPE TENONS
DETAIL S

NOTES:

1. Provide a Hex nut, leveling nut and 2 washers for each bolt.
2. Luminaire mast arms shall be round, tapered steel tubes, taper of 0.1375" to 0.143-inch per foot with an end section 2⅜" OD for mounting hardware. Extensions of 2 NPS Standard pipe and 7" long may be used at the option of the manufacturer. When low pressure sodium luminaires are required, the extension shall be 1'-3".
3. Signal mast arms shall be round, tapered steel tubes, maximum taper 0.143-inch per foot.
4. Handhole reinforcement ring shall be ¼" x 2" for 0.1196" to 0.2391" thick poles, ⅜" x 2" for 0.3125" thick poles.
5. Handholes shall be located on the downstream side of traffic.
6. Detail F, fatigue resistant weld, is required at socket welded signal mast arm plate and pole base plate.
7. Cap screws shall be tightened by the turn-of-nut method ⅓ turn from a snug tight condition. No washer will be required.
8. Outside diameter, wall thickness, and corresponding section properties of poles and mast arms as shown in the Standard Plans are minimums. Unless otherwise specified, alternative sections shall require approval by the Engineer.
9. Wind Loading (3 seconds gust): 100 mph
10. Unit Stresses (Structural steel):
    fy = 55,000 psi (tapered steel tube and anchor bolts)
    fy = 50,000 psi (unless otherwise noted)
11. Unit Stresses (Reinforced concrete):
    f'c = 3,625 psi
    fy = 60,000 psi

WELD SIZE	WALL THICKNESS
3/16"	0.1196"
¼"	0.1793"
5/16"	0.2391"
⅜"	0.3125"

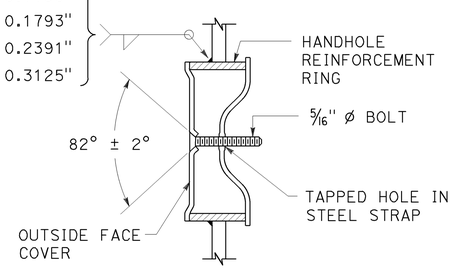

TAMPER RESISTANT HANDHOLE COVER
DETAIL B

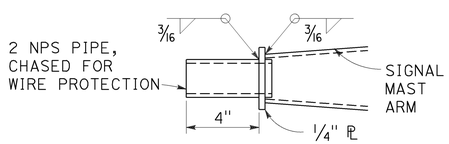

TIP TENON
DETAIL TL

This detail supersedes Detail S when so designated

WELD SIZE	WALL THICKNESS
⅛"	0.1196"
3/16"	0.1793"
¼"	0.2391"

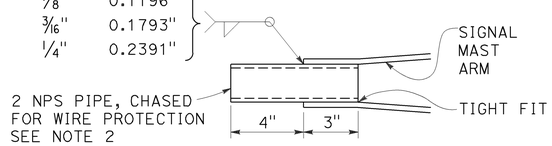

TIP TENON
DETAIL TS

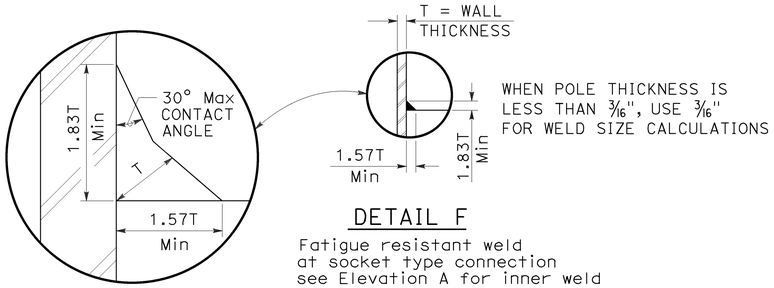

DETAIL F

Fatigue resistant weld at socket type connection see Elevation A for inner weld

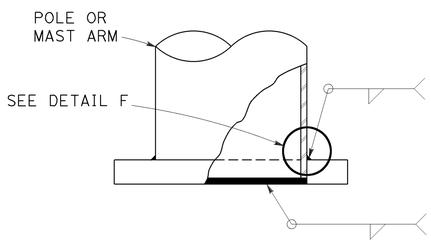

WELD SIZE	WALL THICKNESS
¼"	0.1196"
5/16"	0.1793"
⅜"	0.2391"
7/16"	0.3125"

⅛"	0.1196"
3/16"	0.1793"
¼"	0.2391"
5/16"	0.3125"

ELEVATION A

STATE OF CALIFORNIA
DEPARTMENT OF TRANSPORTATION

ELECTRICAL SYSTEMS (SIGNAL AND LIGHTING STANDARD, DETAIL No. 1)

NO SCALE

RSP ES-7M DATED OCTOBER 30, 2015 SUPERSEDES STANDARD PLAN ES-7M DATED MAY 20, 2011 - PAGE 474 OF THE STANDARD PLANS BOOK DATED 2010.

REVISED STANDARD PLAN RSP ES-7M

9-1-15

Dist	COUNTY	ROUTE	POST MILES TOTAL PROJECT	SHEET No.	TOTAL SHEETS
04	SM	82,84	1.4/25.1; 23.1/24.1	190	196

REGISTERED CIVIL ENGINEER

October 30, 2015
PLANS APPROVAL DATE

REGISTERED PROFESSIONAL ENGINEER Stanley P. Johnson No. C57793 Exp. 3-31-16 CIVIL STATE OF CALIFORNIA

THE STATE OF CALIFORNIA OR ITS OFFICERS OR AGENTS SHALL NOT BE RESPONSIBLE FOR THE ACCURACY OR COMPLETENESS OF SCANNED COPIES OF THIS PLAN SHEET.

TO ACCOMPANY PLANS DATED 2-16-16

2010 REVISED STANDARD PLAN RSP ES-7N

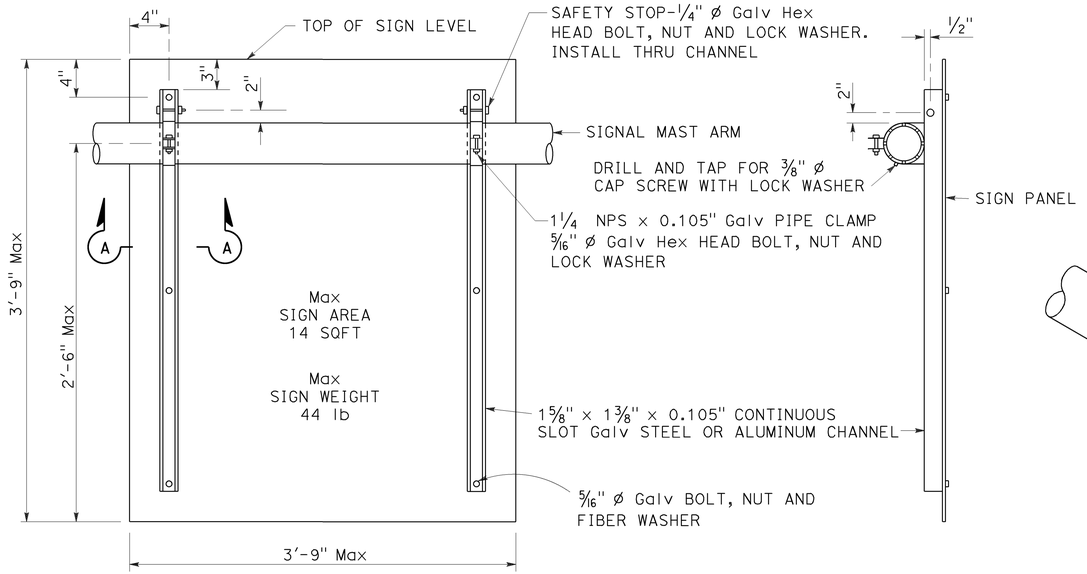

REAR VIEW

SIDE VIEW

SIGN MOUNTING DETAILS
DETAIL U

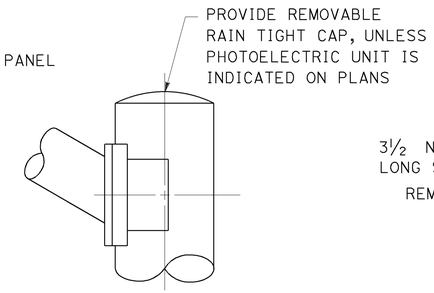

STANDARD TOP
DETAIL B-1

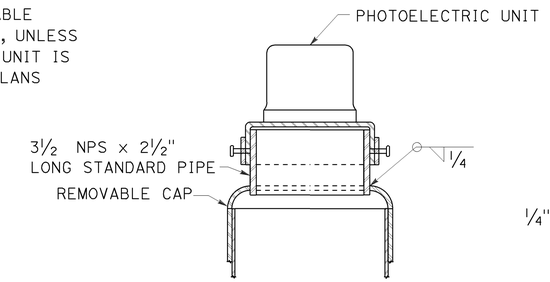

MOUNTING ADAPTER FOR
PHOTOELECTRIC UNIT
DETAIL B-2

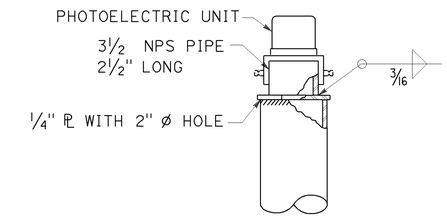

ALTERNATIVE
MOUNTING ADAPTER
DETAIL B-3

POLE TOP DETAILS
DETAIL B

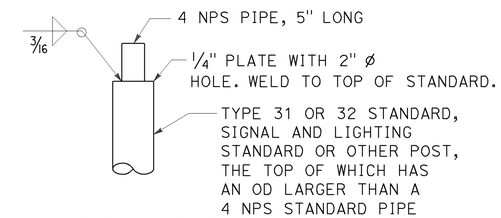

DETAIL C-1

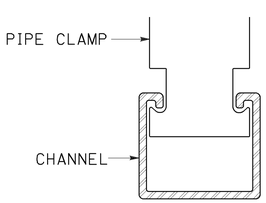

SECTION A-A

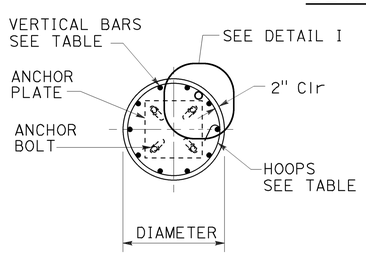

SECTION B-B

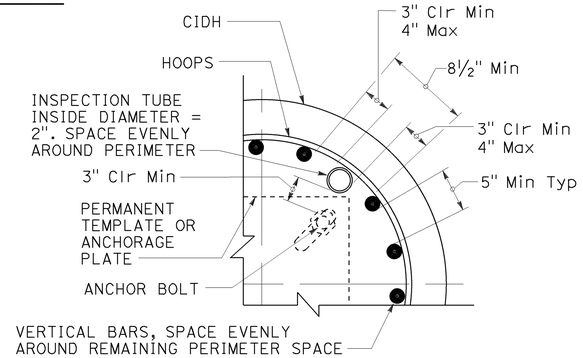

INSPECTION TUBE PLACEMENT
DETAIL I

CIDH REINFORCING AND INSPECTION TUBE SCHEDULE			
CIDH DIAMETER	VERTICAL BARS	HOOPS (WELDED)	INSPECTION TUBE
2 ft	8-#5	#4 AT 6	2
2.5 ft	10-#6		4*
3 ft	12-#7	#5 AT 6	
3.5 ft	14-#8		4
4 ft	18-#9	2-#4 AT 7	5
5 ft	22-#10	2-#5 AT 7	6
6 ft	26-#11	2-#6 AT 7	7

* FOR SLIP BASE VERSIONS WITH 3 ANCHOR BOLTS USE 3 INSPECTION TUBES.

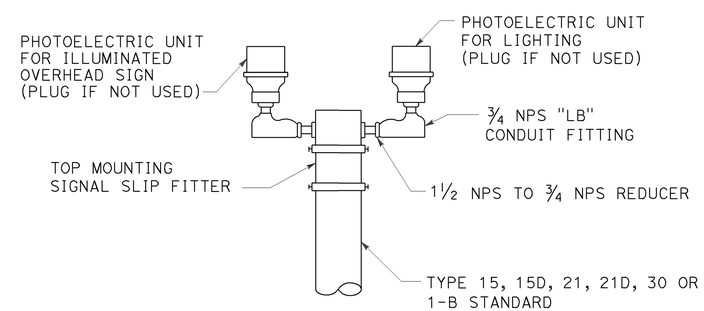

DETAIL C-2

DUAL PHOTOELECTRIC UNIT MOUNTING DETAIL
DETAIL C

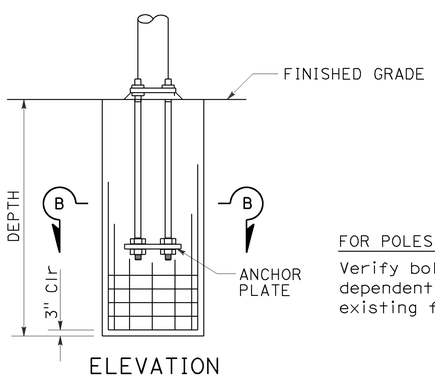

ELEVATION

FOR POLES TO BE INSTALLED ON EXISTING FOUNDATION:
Verify bolt circles, anchor bolt sizes and dependent dimensions for poles to be installed on existing foundations before fabricating the poles.

CAST-IN-DRILLED-HOLE PILE FOUNDATION, REINFORCED PILE
DETAIL A

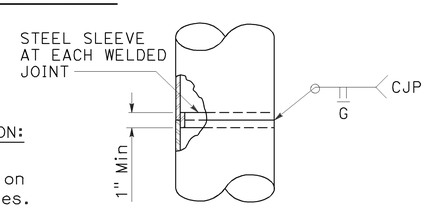

FOR UNIFORM TUBE THICKNESS
DETAIL T-1

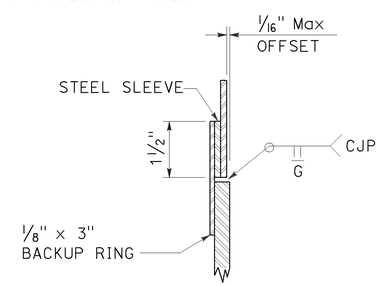

AT TUBE THICKNESS CHANGE
DETAIL T-2

POLE SPLICES
DETAIL T

STATE OF CALIFORNIA
DEPARTMENT OF TRANSPORTATION

ELECTRICAL SYSTEMS (SIGNAL AND LIGHTING STANDARD, DETAIL No. 2)

NO SCALE

RSP ES-7N DATED OCTOBER 30, 2015 SUPERSEDES STANDARD PLAN ES-7N DATED MAY 20, 2011 - PAGE 475 OF THE STANDARD PLANS BOOK DATED 2010.

REVISED STANDARD PLAN RSP ES-7N

9-1-15

Dist	COUNTY	ROUTE	POST MILES TOTAL PROJECT	SHEET No.	TOTAL SHEETS
04	SM	82,84	1.4/25.1; 23.1/24.1	191	196

REGISTERED CIVIL ENGINEER

October 30, 2015
PLANS APPROVAL DATE

REGISTERED PROFESSIONAL ENGINEER
Stanley P. Johnson
No. C57793
Exp. 3-31-16
CIVIL
STATE OF CALIFORNIA

THE STATE OF CALIFORNIA OR ITS OFFICERS OR AGENTS SHALL NOT BE RESPONSIBLE FOR THE ACCURACY OR COMPLETENESS OF SCANNED COPIES OF THIS PLAN SHEET.

TO ACCOMPANY PLANS DATED 2-16-16

2010 REVISED STANDARD PLAN RSP ES-7Q

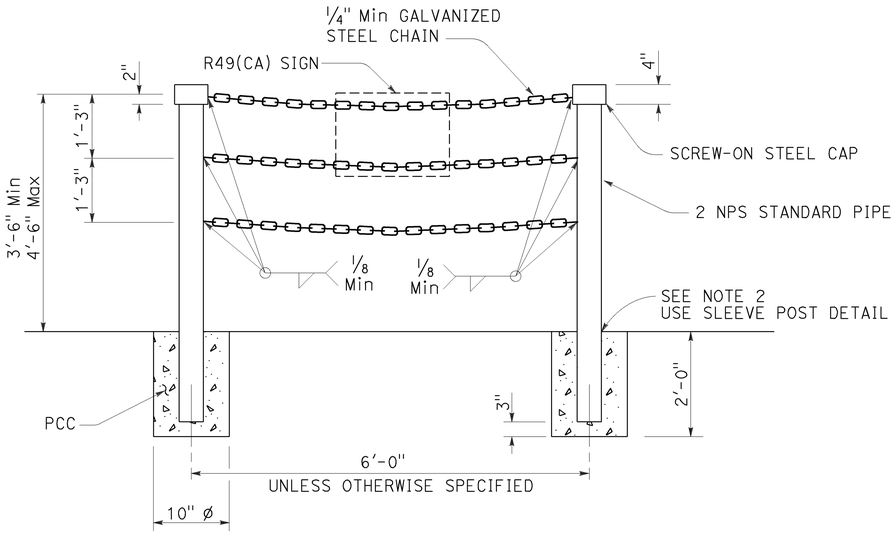

TYPE II
DETAIL A

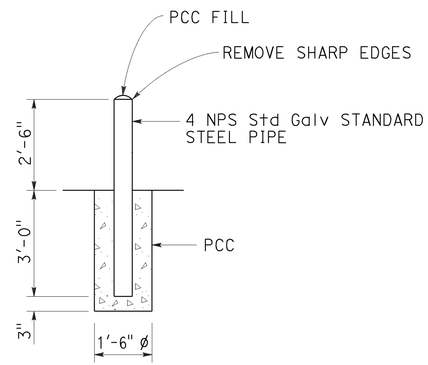

GUARD POST
DETAIL B

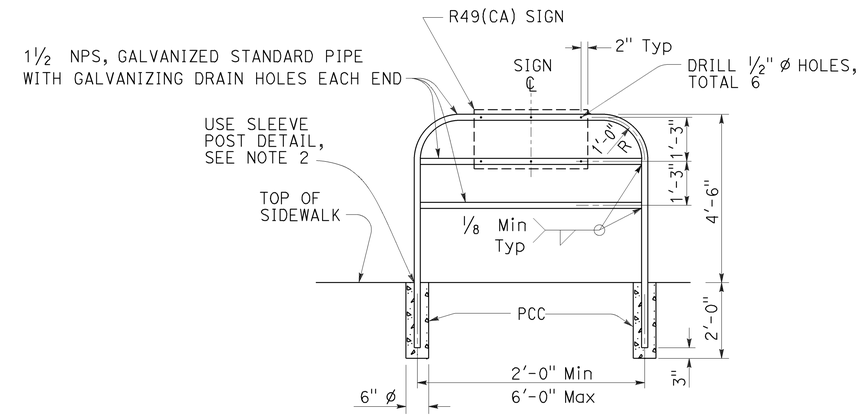

TYPE I
DETAIL C

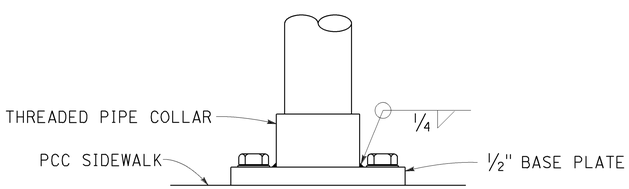

ELEVATION

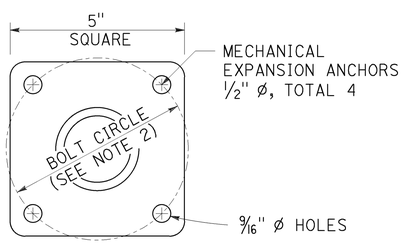

PLAN

POST ANCHORAGE DETAIL
DETAIL D

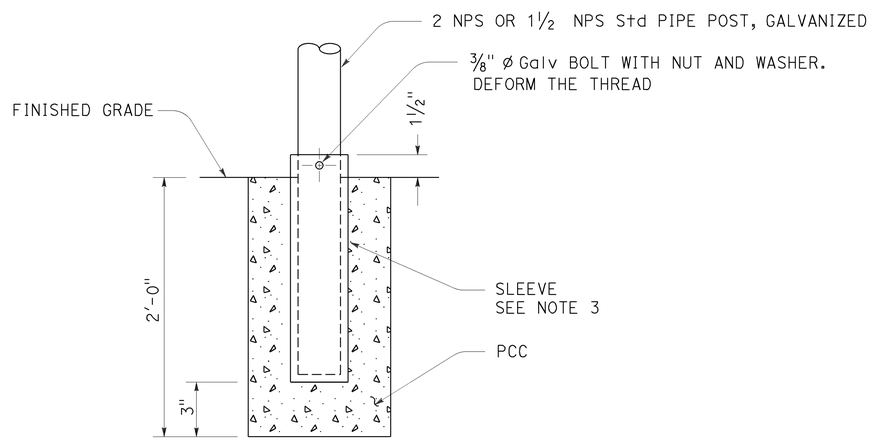

SLEEVE POST DETAIL
Use unless otherwise specified or shown on plans
DETAIL E

NOTES:

1. Pipe post to be set 1'-6" back from face of curb unless otherwise specified.
2. Where barricade posts are installed in existing concrete sidewalk, the post may be anchored to the sidewalk as shown in the "Post Anchorage Detail". Bolt circle diameter shall be 4" minimum for Type I barricade and 5" minimum for Type II barricade.
3. Steel sleeve shall be constructed with an inside diameter 1/10" larger than the post's outside diameter. Wall thickness of sleeve shall be same as post or larger.
4. Alternative details may be submitted for approval by the Engineer.

STATE OF CALIFORNIA
DEPARTMENT OF TRANSPORTATION

ELECTRICAL SYSTEMS (PEDESTRIAN BARRICADES)

NO SCALE

RSP ES-7Q DATED OCTOBER 30, 2015 SUPERSEDES STANDARD PLAN ES-7Q DATED MAY 20, 2011 - PAGE 478 OF THE STANDARD PLANS BOOK DATED 2010.

REVISED STANDARD PLAN RSP ES-7Q

8-24-15

DIST	COUNTY	ROUTE	POST MILES TOTAL PROJECT	SHEET NO.	TOTAL SHEETS
04	SM	82,84	1.4/25.1; 23.1/24.1	192	196

Theresa Gabriel
REGISTERED ELECTRICAL ENGINEER

July 19, 2013
PLANS APPROVAL DATE

REGISTERED PROFESSIONAL ENGINEER Theresa Aziz Gabriel No. E15129 Exp. 6-30-14 ELECTRICAL STATE OF CALIFORNIA

THE STATE OF CALIFORNIA OR ITS OFFICERS OR AGENTS SHALL NOT BE RESPONSIBLE FOR THE ACCURACY OR COMPLETENESS OF SCANNED COPIES OF THIS PLAN SHEET.

TO ACCOMPANY PLANS DATED 2-16-16

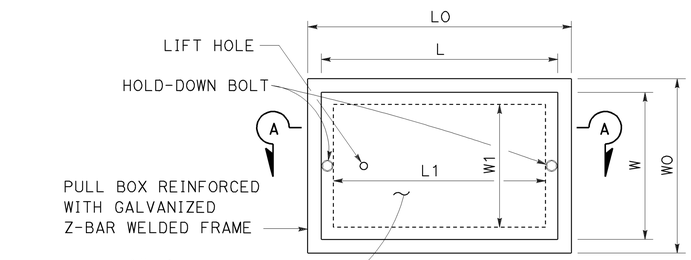

TOP VIEW

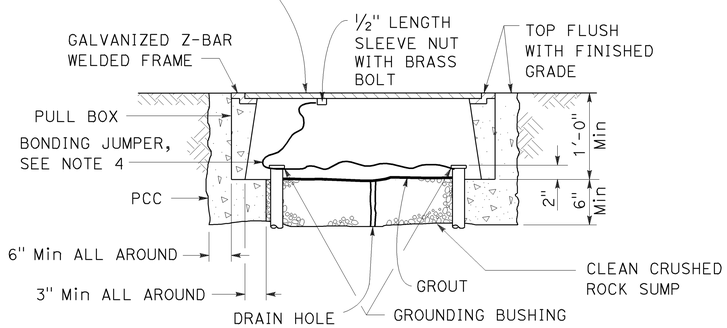

SECTION A-A

No. 3½(T), No. 5(T) AND No. 6(T) TRAFFIC PULL BOX

NOTES:

1. Traffic pull box shall be provided with steel cover and special concrete footing. Steel cover shall have embossed non-skid pattern.
2. Steel reinforcing shall be as regularly used in the standard products of the respective manufacturer.
3. Pull box covers shall be marked as follows: "SERVICE" Service circuits between service point and service disconnect; "SPRINKLER-CONTROL" Sprinkler control circuits, 50 V or less; "CALTRANS" On all pull boxes, except pull boxes marked "SPRINKLER-CONTROL"; and "TELEPHONE" Telephone service.
   - A) No. 3½(T) pull box.
     - 1) "SIGNAL" - Traffic signal circuits with or without lighting or sign lighting circuits.
     - 2) "LIGHTING" - Lighting or sign lighting circuits where voltage is under 600 V.
   - B) No. 5(T) or 6(T) pull box.
     - 1) "TRAFFIC SIGNAL" - Traffic signal circuits with or without lighting or sign lighting circuits.
     - 2) "LIGHTING" - Lighting or sign lighting circuits where voltage is under 600 V.
     - 3) "LIGHTING-HIGH VOLTAGE" - Lighting or sign lighting circuits where voltage is above 600 V.
     - 4) "IRRIGATION" - Circuits to irrigation controller 120 V or more.
     - 5) "RAMP METER" - Ramp meter circuits.
     - 6) "COUNT STATION" - Count or speed monitor circuits.
     - 7) "COMMUNICATION" - Communication circuits.
     - 8) "TOS COMMUNICATIONS" - TOS communications line.
     - 9) "TOS POWER" - TOS power.
     - 10) "TDC POWER" - Telephone demarcation cabinet power.
     - 11) "CCTV" - Closed circuit television circuits.
     - 12) "TMS" - Traffic monitoring station circuits.
     - 13) "CMS" - Changeable message sign circuits.
     - 14) "HAR" - Highway advisory radio circuits.
     - 15) "BOOSTER PUMP" - Booster pump circuit.
4. Bonding jumper for metal covers shall be 3' long, minimum.
5. The nominal dimensions of the opening in which the cover sets shall be the same as the cover dimensions except the length and width dimensions shall be ⅛" greater.
6. Covers and boxes shall be interchangeable with California standard male and female gages. When interchanged with a standard male or female gage, the top surfaces shall be flush within ⅛".

DIMENSION TABLE

PULL BOX	PULL BOX						COVER				
	MINIMUM * THICKNESS	MINIMUM DEPTH BOX AND EXTENSION	WO	LO	L1	W1	L **	W **	R	EDGE THICKNESS	EDGE TAPER
No. 3½(T)	1½"	1'-0"	1'-5"± 1"	1'-8⅞"±	1'-2½"±	10⅝"± 1"	1'-8"±	1'-1¾"±	0"	½"	NONE
No. 5(T)	1¾"	1'-0"	1'-11½"± 1"	2'-5½"±	1'-7"±	1'-1"± 1"	2'-3"±	1'-4"±	0"	½"	NONE
No. 6(T)	2"	1'-0"	2'-6"± 1"	2'-11½"±	1'-11½"±	1'-5"± 1"	2'-9"±	1'-8"±	0"	½"	NONE

* EXCLUDING CONDUIT WEB ** TOP DIMENSION

STATE OF CALIFORNIA
DEPARTMENT OF TRANSPORTATION

ELECTRICAL SYSTEMS (TRAFFIC PULL BOX)

NO SCALE

RSP ES-8B DATED JULY 19, 2013 SUPERSEDES RSP ES-8B DATED JANUARY 20, 2012 THAT SUPPLEMENTS THE STANDARD PLANS BOOK DATED 2010.

REVISED STANDARD PLAN RSP ES-8B

2010 REVISED STANDARD PLAN RSP ES-8B

7-15-13

Dist	COUNTY	ROUTE	POST MILES TOTAL PROJECT	SHEET No.	TOTAL SHEETS
04	SM	82,84	1.4/25.1; 23.1/24.1	193	196

Theresa Gabriel
REGISTERED ELECTRICAL ENGINEER

July 19, 2013
PLANS APPROVAL DATE

REGISTERED PROFESSIONAL ENGINEER
Theresa Aziz Gabriel
No. E15129
Exp. 6-30-14
ELECTRICAL
STATE OF CALIFORNIA

THE STATE OF CALIFORNIA OR ITS OFFICERS OR AGENTS SHALL NOT BE RESPONSIBLE FOR THE ACCURACY OR COMPLETENESS OF SCANNED COPIES OF THIS PLAN SHEET.

TO ACCOMPANY PLANS DATED 2-16-16

2010 REVISED STANDARD PLAN RSP ES-10A

ISOFOOTCANDLE CURVE - MINIMUM

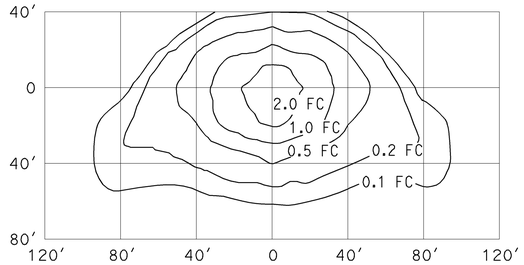

TYPE III MEDIUM CUTOFF

Cutoff Luminaire
34′ Mounting Height
Lamp operated at 22,000 lm
200-W high pressure sodium lamp
ANSI Designation S66

ISOFOOTCANDLE CURVE - MINIMUM

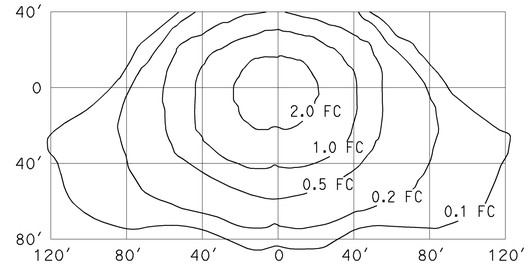

TYPE III MEDIUM CUTOFF

Cutoff Luminaire
40′ Mounting Height
Lamp operated at 37,000 lm
310-W high pressure sodium lamp
ANSI Designation S67

ISOFOOTCANDLE CURVE - MINIMUM

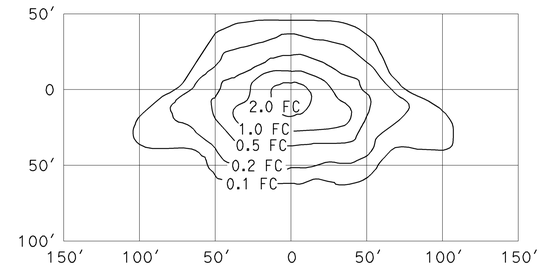

TYPE III MEDIUM CUTOFF

Cutoff Luminaire
30′ Mounting Height
Lamp operated at 16,000 lm
150-W high pressure sodium lamp
ANSI Designation S55

ISOFOOTCANDLE CURVE - MINIMUM

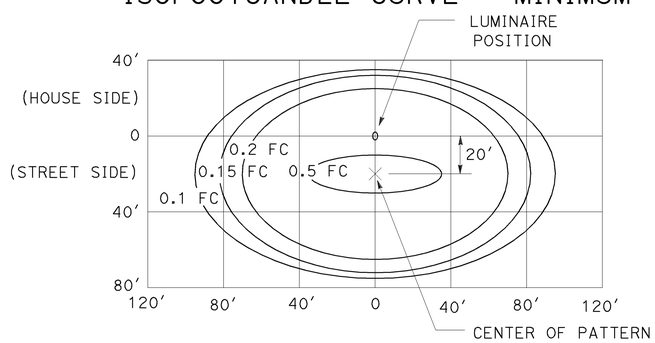

LED LUMINAIRE ROADWAY 1

165-W at 34′ Mounting Height

ISOFOOTCANDLE CURVE - MINIMUM

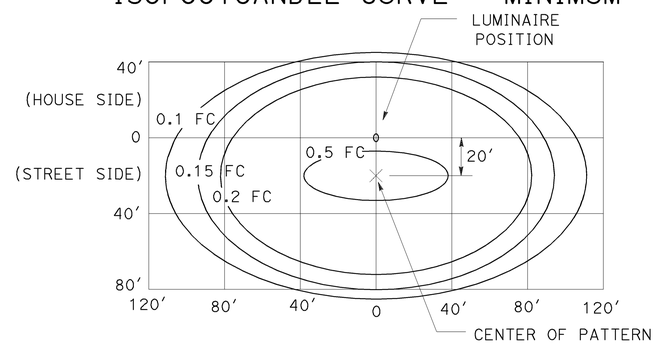

LED LUMINAIRE ROADWAY 2

235-W at 40′ Mounting Height

ISOFOOTCANDLE CURVE - MINIMUM

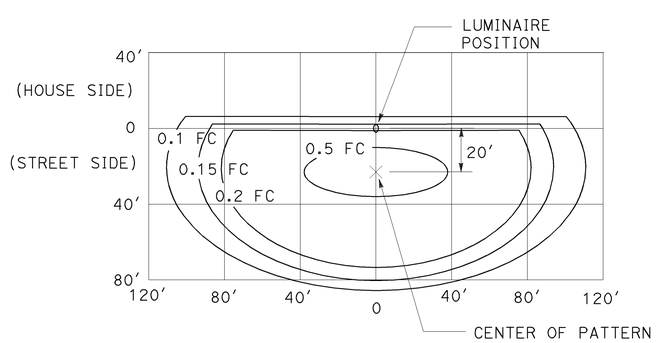

LED LUMINAIRE ROADWAY 3

235-W at 40′ Mounting Height
with back side control

ISOFOOTCANDLE CURVE - MINIMUM

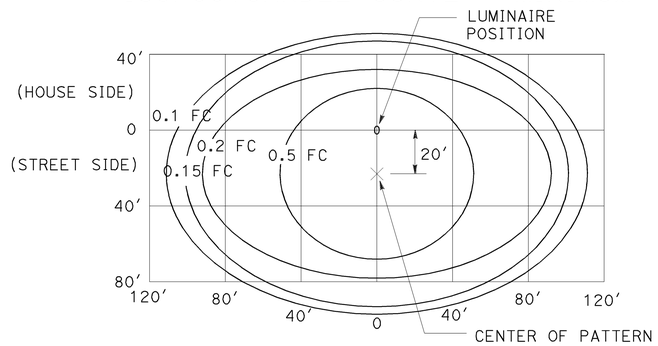

LED LUMINAIRE ROADWAY 4

300-W at 40′ Mounting Height

ISOFOOTCANDLE CURVE - MINIMUM

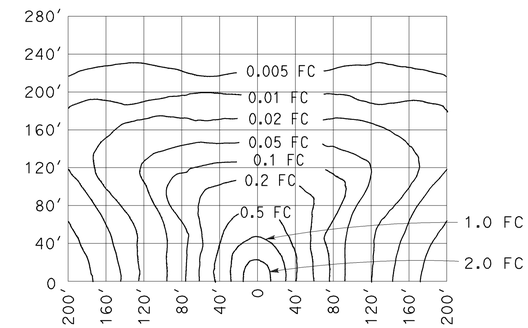

LOW PRESSURE SODIUM LUMINAIRE

40′ Mounting Height
Lamp operated at 33,000 lm
180-W low pressure sodium lamp

STATE OF CALIFORNIA
DEPARTMENT OF TRANSPORTATION

ELECTRICAL SYSTEMS (ISOFOOTCANDLE DIAGRAMS)

NO SCALE

RSP ES-10A DATED JULY 19, 2013 SUPERSEDES RSP ES-10A DATED JULY 20, 2012 THAT SUPPLEMENTS THE STANDARD PLANS BOOK DATED 2010.

REVISED STANDARD PLAN RSP ES-10A

Dist	COUNTY	ROUTE	POST MILES TOTAL PROJECT	SHEET No.	TOTAL SHEETS
04	SM	82,84	1.4/25.1; 23.1/24.1	194	196

REGISTERED CIVIL ENGINEER

July 19, 2013
PLANS APPROVAL DATE

REGISTERED PROFESSIONAL ENGINEER
Stanley P. Johnson
No. C57793
Exp. 3-31-14
CIVIL
STATE OF CALIFORNIA

THE STATE OF CALIFORNIA OR ITS OFFICERS OR AGENTS SHALL NOT BE RESPONSIBLE FOR THE ACCURACY OR COMPLETENESS OF SCANNED COPIES OF THIS PLAN SHEET.

TO ACCOMPANY PLANS DATED 2-16-16

STANDARD TYPE	SETBACK (DIMENSION A)
32	30'-0" (Min)
31	20'-0" (Min)
15, 15D, 15-SB, 21, 21D, 30	ARM LENGTH (Min)

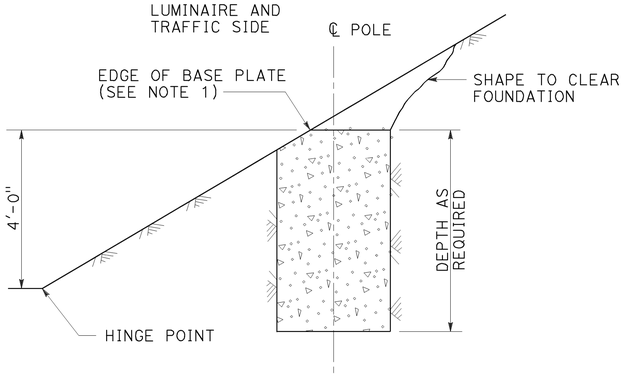

CUT SLOPES
STEEPER THAN 4:1,
LESS THAN 2:1
DETAIL A-1
See Note 2 and 3

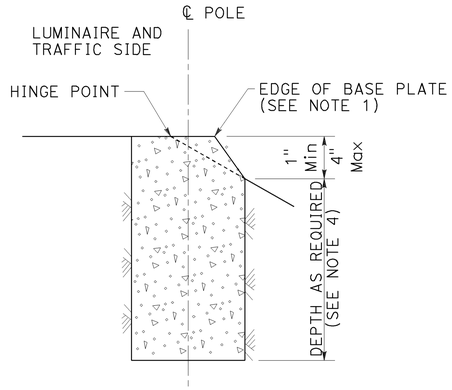

FILL SLOPES
STEEPER THAN 4:1,
LESS THAN 2:1
DETAIL A-2
See Note 2 and 3

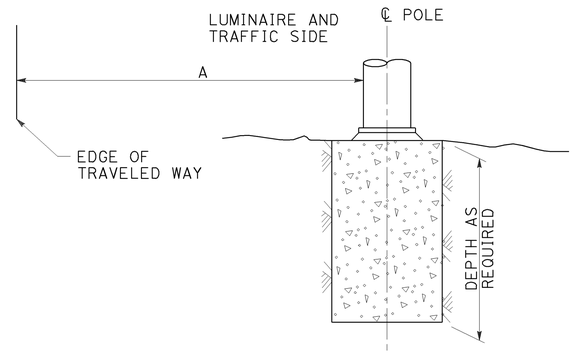

FLAT SECTIONS, CUT OR FILL SLOPES
4:1 OR FLATTER
DETAIL A-3
See Note 2

FOUNDATIONS ADJACENT TO ALL ROADWAYS EXCEPT
IN SIDEWALK, MEDIAN AND ISLAND AREAS
DETAIL A

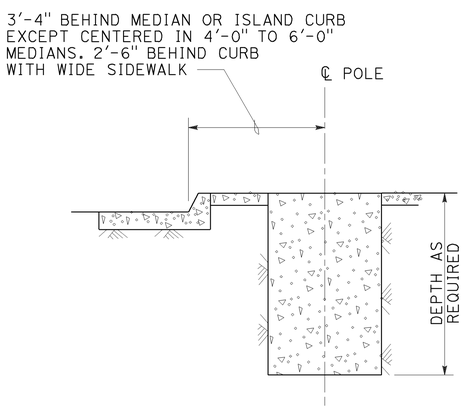

MEDIAN, ISLAND
OR WIDE SIDEWALK
DETAIL B-1
7' Wide and wider

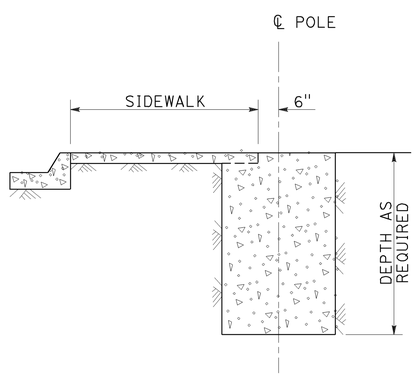

NARROW SIDEWALK
DETAIL B-2
Less than 7' wide

FOUNDATIONS IN SIDEWALK, MEDIAN AND ISLAND AREAS
DETAIL B

NOTES:

1. Where a portion of the foundation is above grade, the top edges shall have a 1" chamfer.
2. Slopes shall be horizontal to vertical ratio (Horizontal : Vertical).
3. Horizontal setbacks on cut and fill slopes steeper than 4:1 shall not exceed the distance shown for flat sections.
4. CIDH embedment depth shall be increased beyond standard depths by the diameter of the CIDH.

STATE OF CALIFORNIA
DEPARTMENT OF TRANSPORTATION

ELECTRICAL SYSTEMS (FOUNDATION INSTALLATIONS)

NO SCALE

RSP ES-11 DATED JULY 19, 2013 SUPERSEDES STANDARD PLAN ES-11
DATED MAY 20, 2011 - PAGE 488 OF THE STANDARD PLANS BOOK DATED 2010.

REVISED STANDARD PLAN RSP ES-11

2010 REVISED STANDARD PLAN RSP ES-11

7-9-13

Dist	COUNTY	ROUTE	POST MILES TOTAL PROJECT	SHEET No.	TOTAL SHEETS
04	SM	82,84	1.4/25.1; 23.1/24.1	195	196

Theresa Gabriel
REGISTERED ELECTRICAL ENGINEER

October 30, 2015
PLANS APPROVAL DATE

REGISTERED PROFESSIONAL ENGINEER
Theresa Aziz Gabriel
No. E15129
Exp. 6-30-16
ELECTRICAL
STATE OF CALIFORNIA

THE STATE OF CALIFORNIA OR ITS OFFICERS OR AGENTS SHALL NOT BE RESPONSIBLE FOR THE ACCURACY OR COMPLETENESS OF SCANNED COPIES OF THIS PLAN SHEET.

TO ACCOMPANY PLANS DATED 2-16-16

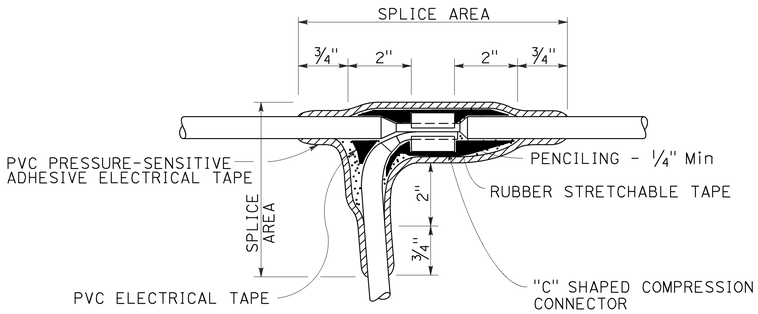

TYPE C SPLICE

See Note 3

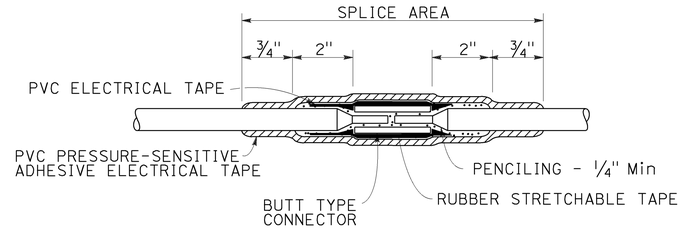

TYPE S SPLICE

See Note 4

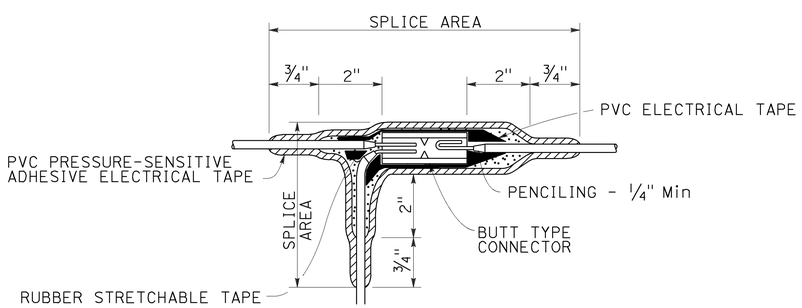

TYPE ST SPLICE

See Note 5

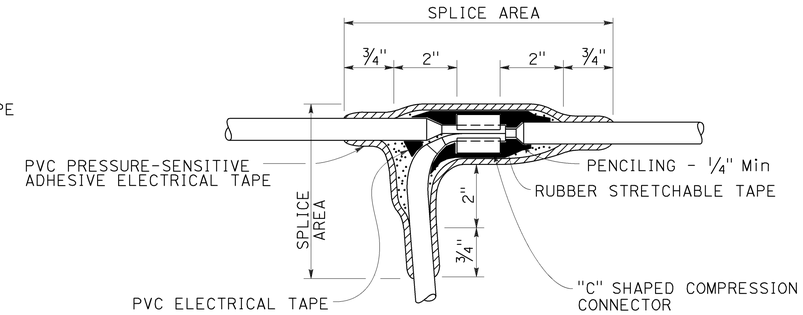

TYPE T SPLICE

See Note 5

NOTES:

1. Dimensions are minimum.
2. Rubber tapes shall be rolled after application.
3. Between 1 free-end and 1 through conductor.
4. Between 2 free-end conductors.
5. Between 3 free-end conductors.

STATE OF CALIFORNIA
DEPARTMENT OF TRANSPORTATION

ELECTRICAL SYSTEMS (SPLICING DETAILS)

NO SCALE

RSP ES-13A DATED OCTOBER 30, 2015 SUPERSEDES STANDARD PLAN ES-13A DATED MAY 20, 2011 - PAGE 491 OF THE STANDARD PLANS BOOK DATED 2010.

REVISED STANDARD PLAN RSP ES-13A

2010 REVISED STANDARD PLAN RSP ES-13A

9-28-15

Dist	COUNTY	ROUTE	POST MILES TOTAL PROJECT	SHEET No.	TOTAL SHEETS
04	SM	82,84	1.4/25.1; 23.1/24.1	196	196

Theresa Gabriel
REGISTERED ELECTRICAL ENGINEER

October 30, 2015
PLANS APPROVAL DATE

REGISTERED PROFESSIONAL ENGINEER Theresa Aziz Gabriel No. E15129 Exp. 6-30-16 ELECTRICAL STATE OF CALIFORNIA

THE STATE OF CALIFORNIA OR ITS OFFICERS OR AGENTS SHALL NOT BE RESPONSIBLE FOR THE ACCURACY OR COMPLETENESS OF SCANNED COPIES OF THIS PLAN SHEET.

TO ACCOMPANY PLANS DATED 2-16-16

2010 REVISED STANDARD PLAN RSP ES-15D

NOTE:

Type SC1A, SC2A, SC3A controls are similar to Types SC1, SC2 and SC controls respectively except test switch and wiring are not required.

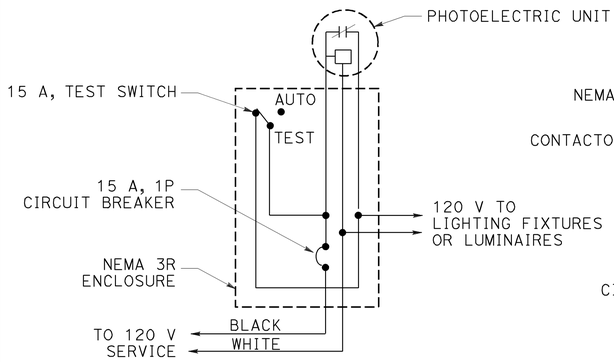

TYPE LC1 CONTROL

For 120 V unswitched circuit with no more than 1000 W load.

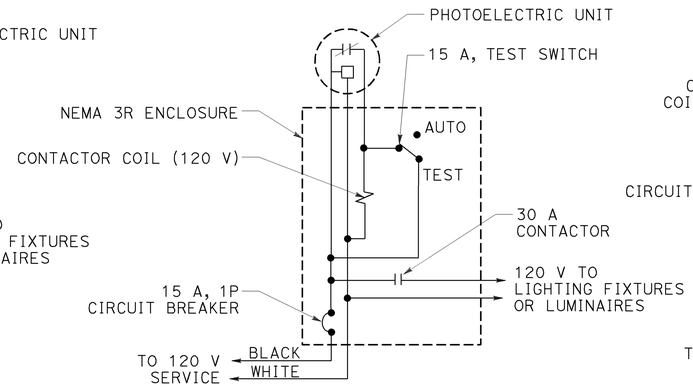

TYPE LC2 CONTROL

For 120 V unswitched circuit

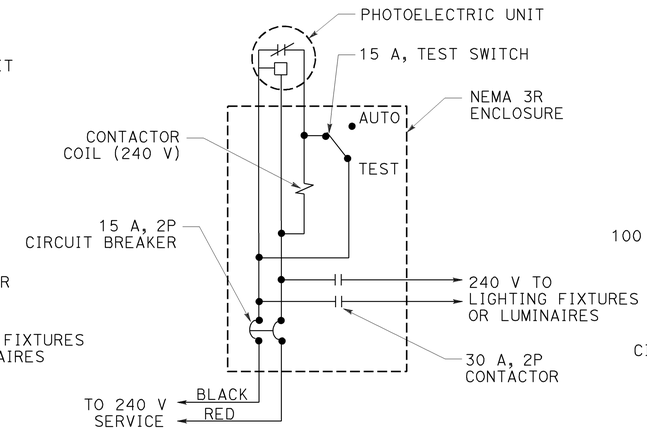

TYPE LC3 CONTROL

For 240 V unswitched circuits

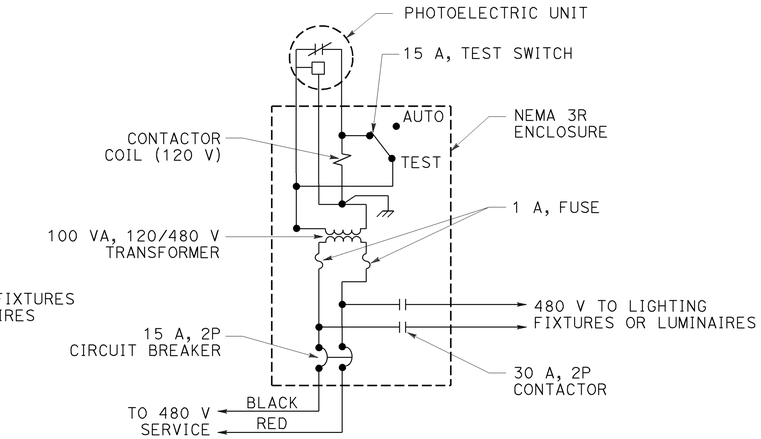

TYPE LC4 CONTROL

For 480 V unswitched circuits

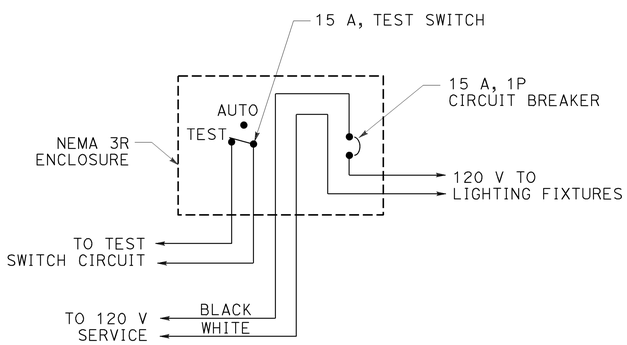

TYPE SC1 CONTROL

For 120 V switched circuit, see Note 1 for Type SC1A

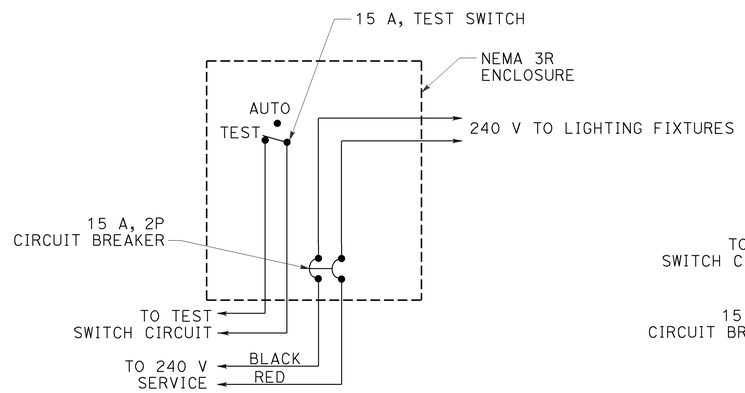

TYPE SC2 CONTROL

For 240 V switched circuit, see Note 1 for Type SC2A

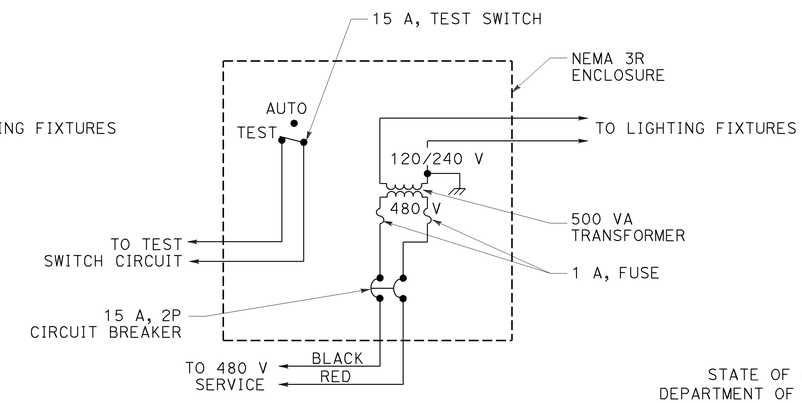

TYPE SC3 CONTROL

For 480 V switched sign circuit, see Note 1 for Type SC3A

STATE OF CALIFORNIA
DEPARTMENT OF TRANSPORTATION

ELECTRICAL SYSTEMS (LIGHTING AND SIGN ILLUMINATION CONTROL)

NO SCALE

RSP ES-15D DATED OCTOBER 30, 2015 SUPERSEDES STANDARD PLAN ES-15D DATED MAY 20, 2011 - PAGE 499 OF THE STANDARD PLANS BOOK DATED 2010.

REVISED STANDARD PLAN RSP ES-15D

8-20-15