DIST	COUNTY	ROUTE	KILOMETER POST TOTAL PROJECT	SHEET No	TOTAL SHEETS
07	LA	5	42.8/47.3	574	1073

Andrew Rittenhouse 12-05-08
REGISTERED CIVIL ENGINEER DATE

6-8-09
PLANS APPROVAL DATE

REGISTERED PROFESSIONAL ENGINEER Andrew P. Rittenhouse No. 61006 Exp. 12-31-10 CIVIL STATE OF CALIFORNIA

The State of California or its officers or agents shall not be responsible for the accuracy or completeness of electronic copies of this plan sheet.

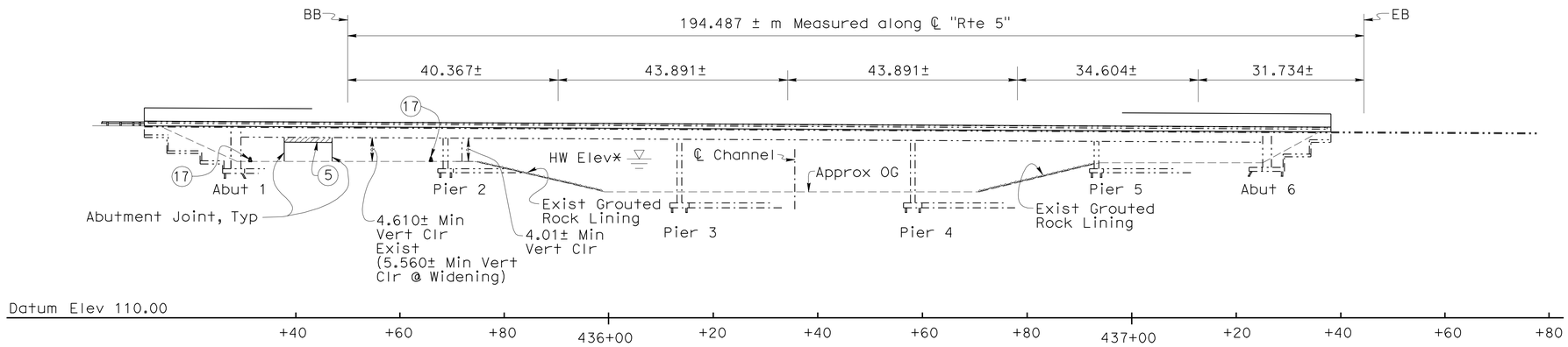

ELEVATION

1:500

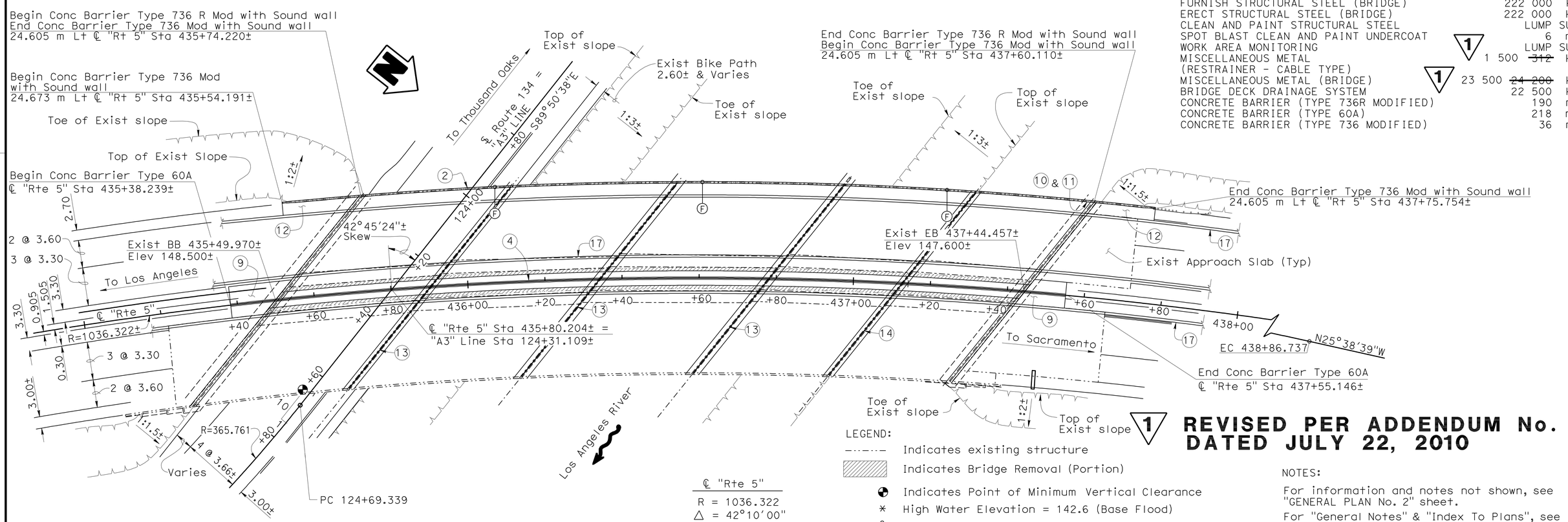

PLAN

1:500

℄ "Rte 5"

R = 1036.322
△ = 42°10'00"
T = 399.537
L = 142.678

LEGEND:

- Indicates existing structure
- Indicates Bridge Removal (Portion)
- Indicates Point of Minimum Vertical Clearance
- High Water Elevation = 142.6 (Base Flood)
- Indicates Electrolier Foundation and Pullbox location, see "Road Plans"
- Indicates Overhead Sign, see "Road Plans"

QUANTITIES

BRIDGE REMOVAL (PORTION), LOCATION A	LUMP SUM	
STRUCTURE EXCAVATION (BRIDGE)	49	m^3
STRUCTURE BACKFILL (BRIDGE)	12	m^3
STRUCTURAL CONCRETE, BRIDGE	261	m^3
STRUCTURAL CONCRETE, BARRIER SLAB	70	m^3
STRUCTURAL CONCRETE, APPROACH SLAB (TYPE N)	36	m^3
DRILL AND BOND DOWEL	285	m
REFINISH BRIDGE DECK	99	m^2
CORE CONCRETE (101 mm - 150 mm)	10	m
SOUND WALL (RIBBED STEEL PANEL)	347	m^2
JOINT SEAL (MR 13 mm)	28	m
JOINT SEAL (MR 25 mm)	196	m
JOINT SEAL (MR 40 mm)	62	m
BAR REINFORCING STEEL (BRIDGE)	41 600	kg
FURNISH STRUCTURAL STEEL (BRIDGE)	222 000	kg
ERECT STRUCTURAL STEEL (BRIDGE)	222 000	kg
CLEAN AND PAINT STRUCTURAL STEEL	LUMP SUM	
SPOT BLAST CLEAN AND PAINT UNDERCOAT	6	m^2
WORK AREA MONITORING	LUMP SUM	
MISCELLANEOUS METAL (RESTRAINER - CABLE TYPE)	1 500 ~~312~~	kg
MISCELLANEOUS METAL (BRIDGE)	23 500 ~~24 200~~	kg
BRIDGE DECK DRAINAGE SYSTEM	22 500	kg
CONCRETE BARRIER (TYPE 736R MODIFIED)	190	m
CONCRETE BARRIER (TYPE 60A)	218	m
CONCRETE BARRIER (TYPE 736 MODIFIED)	36	m

1 REVISED PER ADDENDUM No. 1 DATED JULY 22, 2010

NOTES:

For information and notes not shown, see "GENERAL PLAN No. 2" sheet.

For "General Notes" & "Index To Plans", see "INDEX TO PLANS" sheet.

KP (PM) Indicates Kilometer Post (Post Mile)

NOTE:
THE CONTRACTOR SHALL VERIFY ALL CONTROLLING FIELD DIMENSIONS BEFORE ORDERING OR FABRICATING ANY MATERIAL.

Caltrans Metric

Traci Menard
DESIGN ENGINEER

	BY	CHECKED			
DESIGN	Shervin Pahlavan	Jose Higareda	LOAD FACTOR DESIGN	LIVE LOADING: HS20-44 AND ALTERNATIVE AND PERMIT DESIGN LOAD	
DETAILS	David Kish	Jose Higareda	LAYOUT	Shervin Pahlavan	Jose Higareda
QUANTITIES	Jerry Han	Joel Ruiz	SPECIFICATIONS	Tina Chen	PLANS AND SPECS COMPARED Tina Chen

ALL DIMENSIONS ARE IN METERS UNLESS OTHERWISE SHOWN

ORIGINAL SCALE IN MILLIMETERS FOR REDUCED PLANS 0 10 20 30 40 50 60 70 80 90 100

STATE OF CALIFORNIA
DEPARTMENT OF TRANSPORTATION

DIVISION OF ENGINEERING SERVICES
STRUCTURE DESIGN
DESIGN BRANCH 15

CU 07
EA 121841

BRIDGE NO. 53-1075
KP (PM) 43.6 (27.1)

LOS ANGELES RIVER BRIDGE AND SEPARATION (WIDEN)

GENERAL PLAN NO. 1

DISREGARD PRINTS BEARING EARLIER REVISION DATES

REVISION DATES: 1-22-09 1-23-09 2-4-09 3-16-09 4-3-09 4-28-09 1-28-10 11-23-08 12-22-08

SHEET 1 OF 64

FILE => 53-1075ri-a-gp01.dgn

STRUCTURES DESIGN GENERAL PLAN SHEET (METRIC) (REV.03-17-04)

USERNAME => trmikest DATE PLOTTED => 21-JUL-2010 TIME PLOTTED => 14:08

DIST	COUNTY	ROUTE	KILOMETER POST TOTAL PROJECT	SHEET No	TOTAL SHEETS
07	LA	5	42.8/47.3	612	1073

Andrew Rittenhouse 12-05-08
REGISTERED CIVIL ENGINEER DATE

6-8-09
PLANS APPROVAL DATE

REGISTERED PROFESSIONAL ENGINEER Andrew P. Rittenhouse No. 61006 Exp. 12-31-10 CIVIL STATE OF CALIFORNIA

The State of California or its officers or agents shall not be responsible for the accuracy or completeness of electronic copies of this plan sheet.

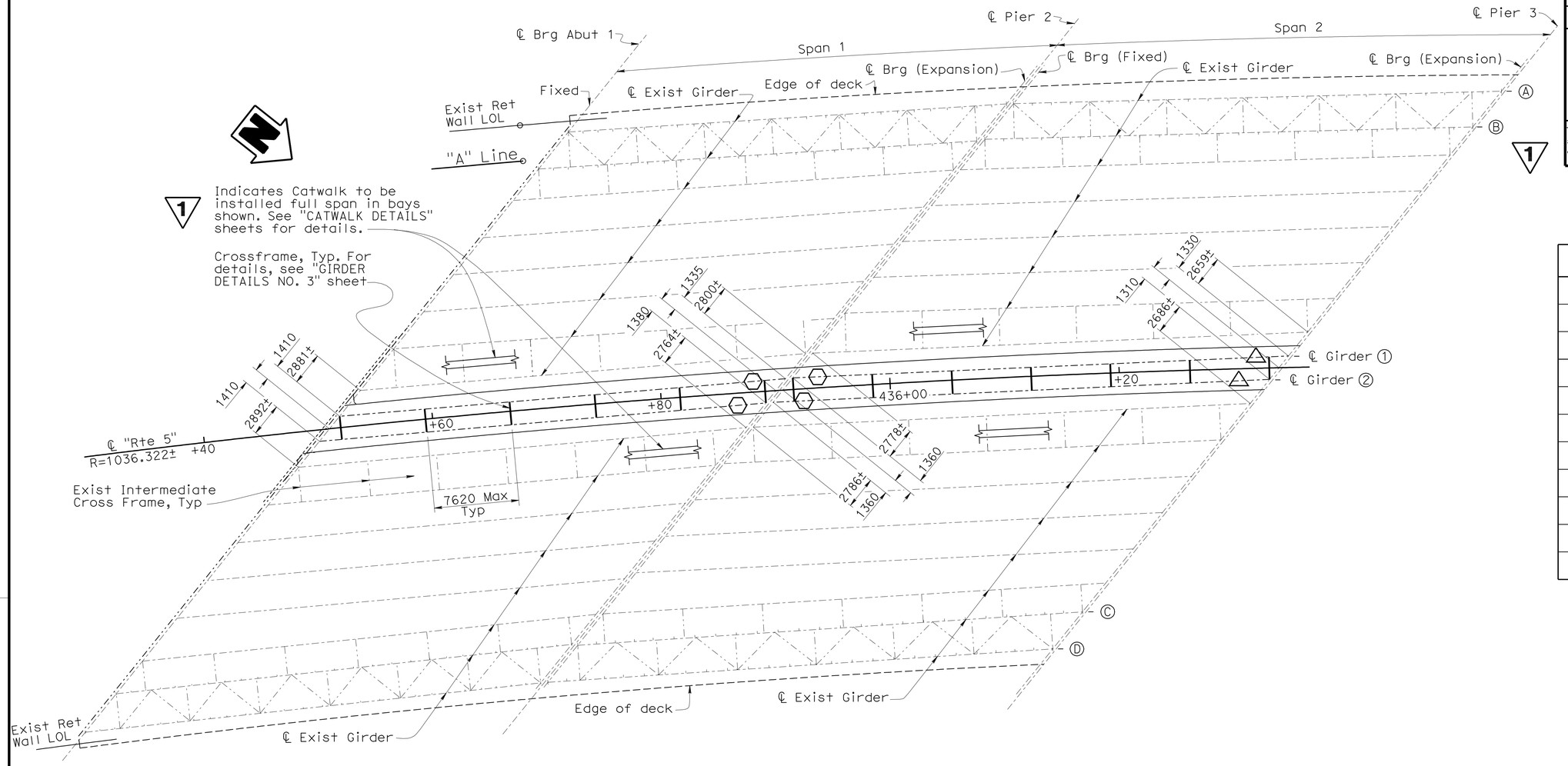

PLAN
1:200

GIRDER TABLE		
SPAN	GIRDER	BEARING ±
1	①	N43°14′26″E
1	②	N43°20′48″E
2	①	N40°58′36″E
2	②	N41°03′26″E
3	①	N38°34′08″E
3	②	N38°39′31″E
4	①	N36°23′02″E
4	②	N36°28′02″E
5	①	N34°31′55″E
5	②	N34°36′35″E

NOTES:

1. For girder lengths see "GIRDER DETAILS No. 1" and "GIRDER DETAILS No. 2" sheets.
2. For locations of fiber optic conduit hanger, see "MISCELLANEOUS DETAILS No. 5" sheet.
3. For locations of deck drain pipe hanger, see "DECK DRAIN DETAILS No. 2 sheet.

LEGEND:

⬡ Denotes "Restrainer Type B Bracket" for details see "MISCELLANEOUS DETAILS No. 2" sheet.

△ Denotes "Restrainer Type A Bracket" for details see "MISCELLANEOUS DETAILS No. 3" sheet.

NOTE:
THE CONTRACTOR SHALL VERIFY ALL CONTROLLING FIELD DIMENSIONS BEFORE ORDERING OR FABRICATING ANY MATERIAL.

1 **REVISED PER ADDENDUM No. 1 DATED JULY 22, 2010**

Caltrans Metric

	BY	CHECKED
DESIGN	Shervin Pahlavan	Jose Higareda
DETAILS	D. Kish/ D. Kubochi	Jose Higareda
QUANTITIES	Jerry Han	Joel Ruiz

STATE OF CALIFORNIA
DEPARTMENT OF TRANSPORTATION

DIVISION OF ENGINEERING SERVICES
STRUCTURE DESIGN
DESIGN BRANCH 15

BRIDGE NO. 53-1075
KILOMETER POST 43.6

LOS ANGELES RIVER BRIDGE AND SEPARATION (WIDEN)

GIRDER LAYOUT NO. 1

ALL DIMENSIONS ARE IN MILLIMETERS UNLESS OTHERWISE SHOWN

ORIGINAL SCALE IN MILLIMETERS FOR REDUCED PLANS 0 10 20 30 40 50 60 70 80 90 100

CU 07
EA 121841

DISREGARD PRINTS BEARING EARLIER REVISION DATES

REVISION DATES: 4-17-08 6-30-08 11-14-08 11-17-08 12-24-08 1-22-09 1-23-09 7-1-10

SHEET 39 OF 64

FILE => 53-1075rl-n-glo01.add

STRUCTURES DESIGN DETAIL SHEET (METRIC) (REV.03-17-04)

USERNAME => trmikest DATE PLOTTED => 21-JUL-2010 TIME PLOTTED => 14:08

DIST	COUNTY	ROUTE	KILOMETER POST TOTAL PROJECT	SHEET No	TOTAL SHEETS
07	LA	5	42.8/47.3	613	1073

Andrew Rittenhouse 12-05-08
REGISTERED CIVIL ENGINEER DATE

6-8-10
PLANS APPROVAL DATE

REGISTERED PROFESSIONAL ENGINEER Andrew P. Rittenhouse No. 61006 Exp. 12-31-10 CIVIL STATE OF CALIFORNIA

The State of California or its officers or agents shall not be responsible for the accuracy or completeness of electronic copies of this plan sheet.

1

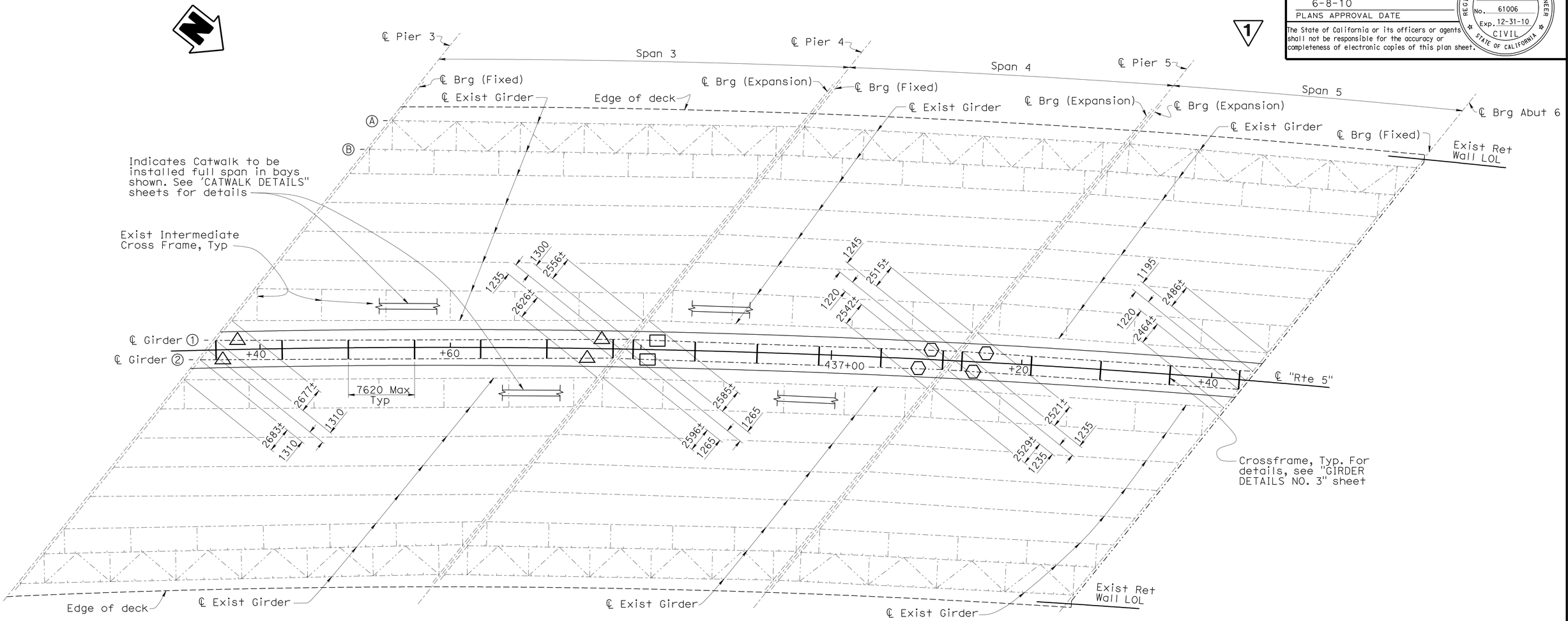

PLAN
1:200

NOTE:
For girder lengths see "GIRDER DETAILS NO. 1" and "GIRDER DETAILS No. 2" sheets.

LEGEND:

⬡ Denotes "Restrainer Type B Bracket" for details see "MISCELLANEOUS DETAILS No. 2" sheet.

△ Denotes "Restrainer Type A Bracket" for details see "MISCELLANEOUS DETAILS No. 3" sheet.

▭ Denotes "Restrainer Type C Bracket" for details see "MISCELLANEOUS DETAILS No. 4" sheet.

NOTE:
THE CONTRACTOR SHALL VERIFY ALL CONTROLLING FIELD DIMENSIONS BEFORE ORDERING OR FABRICATING ANY MATERIAL.

1 **REVISED PER ADDENDUM No. 1 DATED JULY 22, 2010**

Caltrans Metric

	BY	CHECKED
DESIGN	Shervin Pahlavan	Jose Higareda
DETAILS	D. Kish/D. Kubochi	Jose Higareda
QUANTITIES	Jerry Han	Joel Ruiz

STATE OF CALIFORNIA
DEPARTMENT OF TRANSPORTATION

DIVISION OF ENGINEERING SERVICES
STRUCTURE DESIGN
DESIGN BRANCH 15

BRIDGE NO. 53-1075
KILOMETER POST 43.6

LOS ANGELES RIVER BRIDGE AND SEPARATION (WIDEN)

GIRDER LAYOUT NO. 2

ALL DIMENSIONS ARE IN MILLIMETERS UNLESS OTHERWISE SHOWN

ORIGINAL SCALE IN MILLIMETERS FOR REDUCED PLANS 0 10 20 30 40 50 60 70 80 90 100

CU 07
EA 121841

DISREGARD PRINTS BEARING EARLIER REVISION DATES

REVISION DATES: 3-12-07 | 4-13-08 | 6-30-08 | 11-4-08 | 11-21-08 | 12-24-08 | 1-23-09 | 7-1-10

SHEET 40 OF 64

FILE => 53-1075rl-n-glo02.add

STRUCTURES DESIGN DETAIL SHEET (METRIC) (REV.03-17-04)

USERNAME => trmikes1 DATE PLOTTED => 21-JUL-2010 TIME PLOTTED => 14:08

DIST	COUNTY	ROUTE	KILOMETER POST TOTAL PROJECT	SHEET No	TOTAL SHEETS
07	LA	5	42.8/47.3	793	1073

Andrew Rittenhouse 12-5-08
REGISTERED CIVIL ENGINEER DATE

6-8-09
PLANS APPROVAL DATE

REGISTERED PROFESSIONAL ENGINEER Andrew P. Rittenhouse No. 61006 Exp. 12-31-10 CIVIL STATE OF CALIFORNIA

The State of California or its officers or agents shall not be responsible for the accuracy or completeness of electronic copies of this plan sheet.

PILE DATA TABLE

LOCATION		PILE TYPE	DESIGN LOADING (kN)	NOMINAL RESISTANCE (kN) COMPRESSION	NOMINAL RESISTANCE (kN) TENSION	PILE DESIGN TIP ELEVATION (m)	SPECIFIED TIP ELEVATION (m)
ABUT 1	Right Widen	Class 400 Alt W	400	800	400	146.9(1);148.9(2);151.8(3)	146.9
BENT 2	Left Widen	Class 400 Alt W	400	800	400	145.5(1);147.3(2);150.1(3)	145.5
	Median Widen	Class 400 Alt W	400	800	400	145.5(1);147.3(2);150.1(3)	145.5
	Right Widen	Class 400 Alt W	400	800	400	145.5(1);147.3(2);150.1(3)	145.5
BENT 3	Left Widen	600mm CIDH	NA	1,800	900	145.2(1);146.7(3)	145.2
	Median Widen	Class 400 Alt W	400	800	400	146.6(1);148.6(2);150.4(3)	146.6
	Right Widen	600mm CIDH	NA	1,800	900	143.3(1);146.3(3)	143.3
BENT 4	Left Widen	Class 400 Alt W	400	800	400	147.6(1);149.1(2);152.2(3)	147.6
	Median Widen	Class 400 Alt W	400	800	400	147.6(1);149.1(2);152.2(3)	147.6
	Right Widen	Class 400 Alt W	400	800	400	147.0(1);148.5(2);151.6(3)	147.0
BENT 5	Left Widen	Class 400 Alt W	400	800	400	151.9(1);155.3(2);154.1(3)	151.9
	Median Widen	600mm CIDH	NA	1,800	900	145.9(1);148.7(3)	145.9
	Right Widen	Class 400 Alt W	400	800	400	148.4(1);149.4(2);154.1(3)	148.4
PIER 6	Left Widen	600mm CIDH	NA	1,800	900	145.5(1);148.5(3)	145.5
	Median Widen	600mm CIDH	NA	1,800	900	145.5(1);148.5(3)	145.5
	Right Widen	600mm CIDH	NA	2,200	900	144.5(1);149.6(3)	144.5
PIER 7	Left Widen	600mm CIDH	NA	1,800	900	148.9(1);150.8(3)	148.9
	Median Widen	600mm CIDH	NA	1,800	900	146.7(1);148.2(3)	146.7
	Right Widen	600mm CIDH	NA	1,800	900	146.7(1);148.2(3)	146.7
PIER 8	Left Widen	600mm CIDH	NA	1,800	900	147.0(1);151.6(3)	147.0
	Median Widen	600mm CIDH	NA	1,800	900	147.0(1);151.6(3)	147.0
	Right Widen	600mm CIDH	NA	1,800	900	147.6(1);151.6(3)	147.6
ABUT 9	Right Widen	Class 400 Alt W	400	800	400	156.5(1);158.2(2);160.3(3)	156.5

NOTE:
1. PILE TIP CONTROLLED BY: (1) COMPRESSION (2) TENSION (3) LATERAL DEMANDS

SPREAD FOOTING DATA TABLE

LOCATION	RECOMMENDED SOIL BEARING PRESSURE (kPa) WSD GROSS ALLOWABLE SOIL BEARING PRESSURE (q_{all})	MAXIMUM CONTACT PRESSURE (q_{max}) (kPa)
ABUTMENT 1 Median and Left Widen	150	150
ABUTMENT 9 Median and Left Widen	150	150

NOTE:
THE CONTRACTOR SHALL VERIFY ALL CONTROLLING FIELD DIMENSIONS BEFORE ORDERING OR FABRICATING ANY MATERIAL.

GENERAL NOTES
LOAD FACTOR DESIGN

DESIGN: BRIDGE DESIGN SPECIFICATIONS (1996 AASHTO with Interims and Revisions by CALTRANS)

SEISMIC DESIGN: Caltrans Seismic Design Criteria (SDC), Version 1.4 June 2006

DEAD LOAD: Includes 1.675 KPa for future wearing surface.

LIVE LOADING: HS20-44, Alternative Military and Permit design load.

SEISMIC LOADING: Site Specific Acceleration Response Spectra Curve

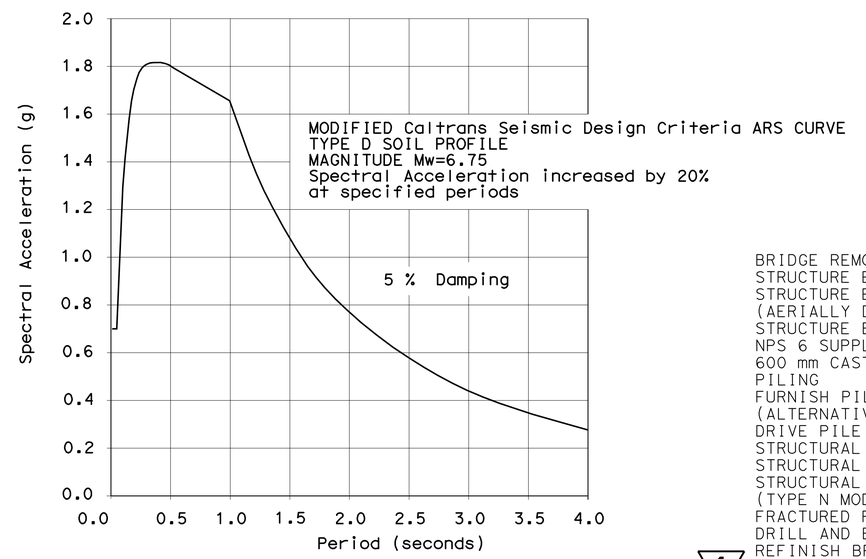

REINFORCED CONCRETE: f_y = 420 MPa; f'_c = 25 MPa; n = 8

Transverse Deck Slabs (Working Stress Design): f_s = 138 MPa; f_c = 8.3 MPa; n = 10

STRUCTURAL STEEL: f_y = 345 MPa (ASTM A709M Grade 345)

ANCHOR RODS:
All anchor rods shall be ASTM F1554 (f_y = 725 MPa)

THREADED RODS:
All threaded rods shall be ASTM A307 (f_y = 250 MPa)

HS BOLTS:
All bolts shall be 22 mm ø ASTM A325 (f_y = 635 MPa) with threads excluded from the shear plane (unless noted otherwise).

QUANTITIES:

BRIDGE REMOVAL (PORTION), LOCATION G	LUMP	SUM
STRUCTURE EXCAVATION (BRIDGE)	1 930	m^3
STRUCTURE EXCAVATION (TYPE Y-2) (AERIALLY DEPOSITED LEAD)	973	m^3
STRUCTURE BACKFILL (BRIDGE)	1 730	m^3
NPS 6 SUPPLY LINE (BRIDGE)	52	m
600 mm CAST-IN-DRILLED-HOLE CONCRETE PILING	3 147	m
FURNISH PILING (CLASS 400) (ALTERNATIVE W)	7 048	m
DRIVE PILE (CLASS 400) (ALTERNATIVE W)	489	EA
STRUCTURAL CONCRETE, BRIDGE FOOTING	1 460	m^3
STRUCTURAL CONCRETE, BRIDGE	4 950	m^3
STRUCTURAL CONCRETE, APPROACH SLAB (TYPE N MODIFIED)	227	m^3
FRACTURED RIB TEXTURE	39	m^2
DRILL AND BOND DOWEL	139	m
REFINISH BRIDGE DECK	255	m^2
CORE CONCRETE (101 mm - 150 mm)	126	m
JOINT SEAL (MR 13 mm)	87	m
JOINT SEAL (MR 25 mm)	306	m
BAR REINFORCING STEEL (BRIDGE)	608 000	kg
HEADED BAR REINFORCEMENT	2 146	EA
FURNISH STRUCTURAL STEEL (BRIDGE)	1 070 000	kg
ERECT STRUCTURAL STEEL (BRIDGE)	1 070 000	kg
CLEAN AND PAINT STRUCTURAL STEEL	LUMP	SUM
SPOT BLAST CLEAN AND PAINT UNDERCOAT	26	m^2
WORK AREA MONITORING	LUMP	SUM
SLOPE PAVING (STAMPED CONCRETE)	2 300	m^2
MISCELLANEOUS METAL (RESTRAINER-CABLE TYPE) (RESTRAINER - CABLE TYPE)	10 490	kg
MISCELLANEOUS METAL (BRIDGE)	3 930	kg
BRIDGE DECK DRAINAGE SYSTEM	23 180	kg
CHAIN LINK RAILING (TYPE 3L)	442	m
CHAIN LINK RAILING (TYPE 7)	482	m
CABLE RAILING	5	m
CONCRETE BARRIER (TYPE 60C MODIFIED)	8	m
CONCRETE BARRIER (TYPE 742 MOD-1)	500	m
CONCRETE BARRIER (TYPE 742 MODIFIED)	490	m

1 REVISED PER ADDENDUM No. 1 DATED JULY 22, 2010

KP (PM) Indicates Kilometer Post (Post Mile)

Caltrans Metric

Traci Menard 12-5-08
DESIGN ENGINEER

	BY	CHECKED
DESIGN	Ulysses Smpardos	Mark Okimura
DETAILS	J Ramirez/S Schenck	Mark Okimura
QUANTITIES	E. Hall/A. Logus	R. Odell/D. Kuboch

LOAD FACTOR DESIGN — LIVE LOADING: HS20-44 AND ALTERNATIVE AND PERMIT DESIGN LOAD

	BY	CHECKED
LAYOUT	Ulysses Smpardos	Mark Okimura
SPECIFICATIONS	Tina Chen	PLANS AND SPECS COMPARED Tina Chen

STATE OF CALIFORNIA
DEPARTMENT OF TRANSPORTATION

DIVISION OF ENGINEERING SERVICES
STRUCTURE DESIGN
DESIGN BRANCH 15

BRIDGE NO. 53-1085
KP (PM) 46.1(28.7)

PROVIDENCIA AVENUE OH (WIDEN)
GENERAL PLAN NO. 4

ALL DIMENSIONS ARE IN METERS UNLESS OTHERWISE SHOWN

ORIGINAL SCALE IN MILLIMETERS FOR REDUCED PLANS 0 10 20 30 40 50 60 70 80 90 100

CU 07
EA 121841

DISREGARD PRINTS BEARING EARLIER REVISION DATES

REVISION DATES: 4-12-08, 5-6-09, 5-12-09, 1-28-10, 1-28-09, 2-4-09, 2-11-09, 2-13-09, 3-16-09

SHEET 4 OF 152

FILE => 53-1085-a-gp04.dgn

STRUCTURES DESIGN GENERAL PLAN SHEET (METRIC) (REV.03-17-04)

USERNAME => trmikest DATE PLOTTED => 21-JUL-2010 TIME PLOTTED => 14:03

DIST	COUNTY	ROUTE	KILOMETER POST TOTAL PROJECT	SHEET No	TOTAL SHEETS
07	LA	5	42.8/47.3	794	1073

Andrew Rittenhouse 12-05-08
REGISTERED CIVIL ENGINEER DATE

6-8-09
PLANS APPROVAL DATE

REGISTERED PROFESSIONAL ENGINEER Andrew P. Rittenhouse No. 61006 Exp. 12-31-10 CIVIL STATE OF CALIFORNIA

The State of California or its officers or agents shall not be responsible for the accuracy or completeness of electronic copies of this plan sheet.

INDEX TO PLANS

SHEET NO.	TITLE
1	GENERAL PLAN NO. 1
2	GENERAL PLAN NO. 2
3	GENERAL PLAN NO. 3
4	GENERAL PLAN NO. 4
5	INDEX TO PLANS
6	FOUNDATION PLAN NO. 1
7	FOUNDATION PLAN NO. 2
8	EXCAVATION DETAILS NO. 1
9	EXCAVATION DETAILS NO. 2
10	CONCRETE STRENGTH AND TYPE LIMITS
11	ABUTMENT 1 LAYOUT NO. 1
12	ABUTMENT 1 LAYOUT NO. 2
13	ABUTMENT 1 LAYOUT NO. 3
14	ABUTMENT 9 LAYOUT NO. 1
15	ABUTMENT 9 LAYOUT NO. 2
16	ABUTMENT 9 LAYOUT NO. 3
17	ABUTMENT DETAILS NO. 1
18	ABUTMENT DETAILS NO. 2
19	ABUTMENT DETAILS NO. 3
20	ABUTMENT DETAILS NO. 4
21	ABUTMENT DETAILS NO. 5
22	ABUTMENT DETAILS NO. 6
23	ABUTMENT DETAILS NO. 7
24	ABUTMENT DETAILS NO. 8
25	ABUTMENT DETAILS NO. 9
26	ABUTMENT DETAILS NO. 10
27	ABUTMENT DETAILS NO. 11
28	ABUTMENT DETAILS NO. 12
29	ABUTMENT DETAILS NO. 13
30	ABUTMENT DETAILS NO. 14
31	ABUTMENT DETAILS NO. 15
32	ABUTMENT DETAILS NO. 16
33	ABUTMENT DETAILS NO. 17
34	ABUTMENT DETAILS NO. 18
35	ABUTMENT DETAILS NO. 19
36	ABUTMENT DETAILS NO. 20
37	ABUTMENT DETAILS NO. 21
38	ABUTMENT DETAILS NO. 22
39	ABUTMENT DETAILS NO. 23
40	ABUTMENT DETAILS NO. 24
41	ABUTMENT DETAILS NO. 25
42	ABUTMENT DETAILS NO. 26
43	ABUTMENT DETAILS NO. 27
44	ABUTMENT DETAILS NO. 28
45	ABUTMENT DETAILS NO. 29
46	ABUTMENT DETAILS NO. 30
47	ABUTMENT DETAILS NO. 31
48	ABUTMENT DETAILS NO. 32
49	BENT 2 LAYOUT
50	BENT 3 LAYOUT
51	BENT 4 LAYOUT
52	BENT 5 LAYOUT
53	BENT DETAILS NO. 1
54	BENT DETAILS NO. 2
55	BENT DETAILS NO. 3
56	BENT DETAILS NO. 4
57	BENT DETAILS NO. 5
58	PIER 6 LAYOUT
59	PIER 7 LAYOUT
60	PIER 8 LAYOUT
61	PIER DETAILS NO. 1
62	PIER DETAILS NO. 2
63	PIER DETAILS NO. 3
64	PIER DETAILS NO. 4
65	PIER DETAILS NO. 5
66	TYPICAL SECTION NO. 1
67	TYPICAL SECTION NO. 2
68	TYPICAL SECTION NO. 3
69	TYPICAL SECTION NO. 4
70	GIRDER LAYOUT NO. 1
71	GIRDER LAYOUT NO. 2
72	GIRDER LAYOUT NO. 3
73	DECK TRANSVERSE REINF. NO. 1
74	DECK TRANSVERSE REINF. NO. 2
75	DECK TRANSVERSE REINF. NO. 3
76	GIRDER DETAILS NO. 1
77	GIRDER DETAILS NO. 2
78	GIRDER DETAILS NO. 3
79	GIRDER DETAILS NO. 4
80	GIRDER DETAILS NO. 5
81	GIRDER DETAILS NO. 6
82	GIRDER DETAILS NO. 7
83	STEEL GIRDER DETAILS
84	GIRDER REPLACEMENT DETAILS
84A	CABLE RESTRAINER LAYOUT NO. 1
84B	CABLE RESTRAINER LAYOUT NO. 2
1 84C	CABLE RESTRAINER ASSEMBLY - TYPE 1
84D	CABLE RESTRAINER ASSEMBLY - TYPE 2
84E	CABLE RESTRAINER ASSEMBLY - TYPE 3
85	MISCELLANEOUS DETAILS NO. 1
86	MISCELLANEOUS DETAILS NO. 2
87	MISCELLANEOUS DETAILS NO. 3
88	MISCELLANEOUS DETAILS NO. 4
89	MISCELLANEOUS DETAILS NO. 5
90	MISCELLANEOUS DETAILS NO. 6
91	MISCELLANEOUS DETAILS NO. 7
92	MISCELLANEOUS DETAILS NO. 8
93	MISCELLANEOUS DETAILS NO. 9
94	MISCELLANEOUS DETAILS NO. 10
95	MISCELLANEOUS DETAILS NO. 11
96	MISCELLANEOUS DETAILS NO. 12
97	MISCELLANEOUS DETAILS NO. 13
98	MISCELLANEOUS DETAILS NO. 14
99	MISCELLANEOUS DETAILS NO. 15
100	MISCELLANEOUS DETAILS NO. 16
101	MISCELLANEOUS DETAILS NO. 17
102	MISCELLANEOUS DETAILS NO. 18
103	MISCELLANEOUS DETAILS NO. 19
104	MISCELLANEOUS DETAILS NO. 20
105	MISCELLANEOUS DETAILS NO. 21
106	MISCELLANEOUS DETAILS NO. 22
107	MISCELLANEOUS DETAILS NO. 23
108	PEDESTRIAN OH LAYOUT
109	PEDESTRIAN OH DETAILS NO. 1
110	PEDESTRIAN OH DETAILS NO. 2
111	PEDESTRIAN OH DETAILS NO. 3
112	PEDESTRIAN OH DETAILS NO. 4
113	PEDESTRIAN OH DETAILS NO. 5
114	PEDESTRIAN OH DETAILS NO. 6
115	PEDESTRIAN OH DETAILS NO. 7
116	PEDESTRIAN OH DETAILS NO. 8
117	PEDESTRIAN OH DETAILS NO. 9
118	PEDESTRIAN OH DETAILS NO. 10
119	PEDESTRIAN OH DETAILS NO. 11
120	PEDESTRIAN OH DETAILS NO. 12
121	PEDESTRIAN OH DETAILS NO. 13
122	PEDESTRIAN OH DETAILS NO. 14
123	PEDESTRIAN OH DETAILS NO. 15
124	PEDESTRIAN OH DETAILS NO. 16
125	PEDESTRIAN OH DETAILS NO. 17
126	PEDESTRIAN OH DETAILS NO. 18
127	PEDESTRIAN OH DETAILS NO. 19
128	PEDESTRIAN OH DETAILS NO. 20
129	PEDESTRIAN OH DETAILS NO. 21
130	PEDESTRIAN OH DETAILS NO. 22
131	ARCHITECTURAL DETAILS
132	DECK DRAINAGE LAYOUT
133	DECK DRAIN DETAILS NO. 1
134	DECK DRAIN DETAILS NO. 2
135	DECK DRAIN DETAILS NO. 3
136	BARRIER TRANSITION DETAILS NO. 1
137	BARRIER TRANSITION DETAILS NO. 2
138	STRUCTURE APPROACH DRAINAGE LAYOUT NO. 1
139	STRUCTURE APPROACH DRAINAGE LAYOUT NO. 2
140	STRUCTURE APPROACH DRAINAGE DETAILS
141	STRUCTURE APPROACH TYPE N(9S) - MOD
142	SLOPE PAVING DETAILS
143	CHAIN LINK RAILING TYPE 3L
144	LOG OF TEST BORINGS 1 OF 9
145	LOG OF TEST BORINGS 2 OF 9
146	LOG OF TEST BORINGS 3 OF 9
147	LOG OF TEST BORINGS 4 OF 9
148	LOG OF TEST BORINGS 5 OF 9
149	LOG OF TEST BORINGS 6 OF 9
150	LOG OF TEST BORINGS 7 OF 9
151	LOG OF TEST BORINGS 8 OF 9
152	LOG OF TEST BORINGS 9 OF 9

STANDARD PLAN SHEET No.

DETAIL No.

STANDARD PLANS DATED JULY 2004

A10A	ACRONYMS AND ABBREVIATIONS (A-L)
A10B	ACRONYMS AND ABBREVIATIONS (M-Z)
A62C	LIMITS OF PAYMENT FOR EXCAVATION AND BACKFILL BRIDGE
A76A	CONCRETE BARRIER TYPE 60
H9	PLANTING AND IRRIGATION DETAILS
T3	TEMPORARY RAILING (TYPE K)
B0-1	BRIDGE DETAILS
B0-3	BRIDGE DETAILS
B0-5	BRIDGE DETAILS
B2-3	400 mm AND 600 mm CAST-IN-DRILLED-HOLE CONCRETE PILE
B2-5	PILE DETAILS CLASS 400 AND CLASS 625
B6-10	UTILITY OPENINGS T-BEAM
RSP B6-21	JOINT SEALS (MAXIMUM MOVEMENT RATING = 50 mm)
B7-6	DECK DRAINS TYPES D-1 AND D-2
B11-47	CABLE RAILING
B11-52	CHAIN LINK RAILING TYPE 7
B11-57	CONCRETE BARRIER TYPE 742
B14-3	COMMUNICATION AND SPRINKLER CONTROL CONDUITS (CONDUIT LESS THAN SIZE 103)
B14-4	WATER SUPPLY LINE (BRIDGE) (PIPE SIZES LESS THAN NPS 4)

NOTE:
THE CONTRACTOR SHALL VERIFY ALL CONTROLLING FIELD DIMENSIONS BEFORE ORDERING OR FABRICATING ANY MATERIAL.

1 **REVISED PER ADDENDUM No. 1 DATED JULY 22, 2010**

Caltrans Metric

ALL DIMENSIONS ARE IN MILLIMETERS UNLESS OTHERWISE SHOWN

ORIGINAL SCALE IN MILLIMETERS FOR REDUCED PLANS 0 10 20 30 40 50 60 70 80 90 100

	BY	CHECKED
DESIGN	Ulysses Smpardos	Mark Okimura
DETAILS	Steven Schenck	Mark Okimura
QUANTITIES	E. Hall/A. Logus	R. Odell/D. Kubochi

STATE OF CALIFORNIA DEPARTMENT OF TRANSPORTATION

DIVISION OF ENGINEERING SERVICES STRUCTURE DESIGN
DESIGN BRANCH 15

CU 07
EA 121841

BRIDGE NO. 53-1085
KILOMETER POST 46.1

PROVIDENCIA AVENUE OH (WIDEN)
INDEX TO PLANS

DISREGARD PRINTS BEARING EARLIER REVISION DATES

REVISION DATES: 8-28-08 3-18-09 3-23-09 1-28-10 1-16-09 1-23-09 2-10-09 2-18-09 3-12-09

SHEET 5 OF 152

FILE => 53-1085-a-itp.add

STRUCTURES DESIGN DETAIL SHEET (METRIC) (REV.03-17-04)

USERNAME => frmikest DATE PLOTTED => 21-JUL-2010 TIME PLOTTED => 14:09

DIST	COUNTY	ROUTE	KILOMETER POST TOTAL PROJECT	SHEET No	TOTAL SHEETS
07	LA	5	42.8/47.3	795	1073

Andrew Rittenhouse 12-05-08
REGISTERED CIVIL ENGINEER DATE

6-8-09
PLANS APPROVAL DATE

REGISTERED PROFESSIONAL ENGINEER Andrew P. Rittenhouse No. 61006 Exp. 12-31-10 CIVIL STATE OF CALIFORNIA

The State of California or its officers or agents shall not be responsible for the accuracy or completeness of electronic copies of this plan sheet.

Caltrans Metric

CURVE DATA

NO	R	Δ	T	L
A	548.641	35°10'00"	173.864	336.742
B	6843.316	1°55'01"	114.486	228.950

1 REVISED PER ADDENDUM No. 1 DATED JULY 22, 2010

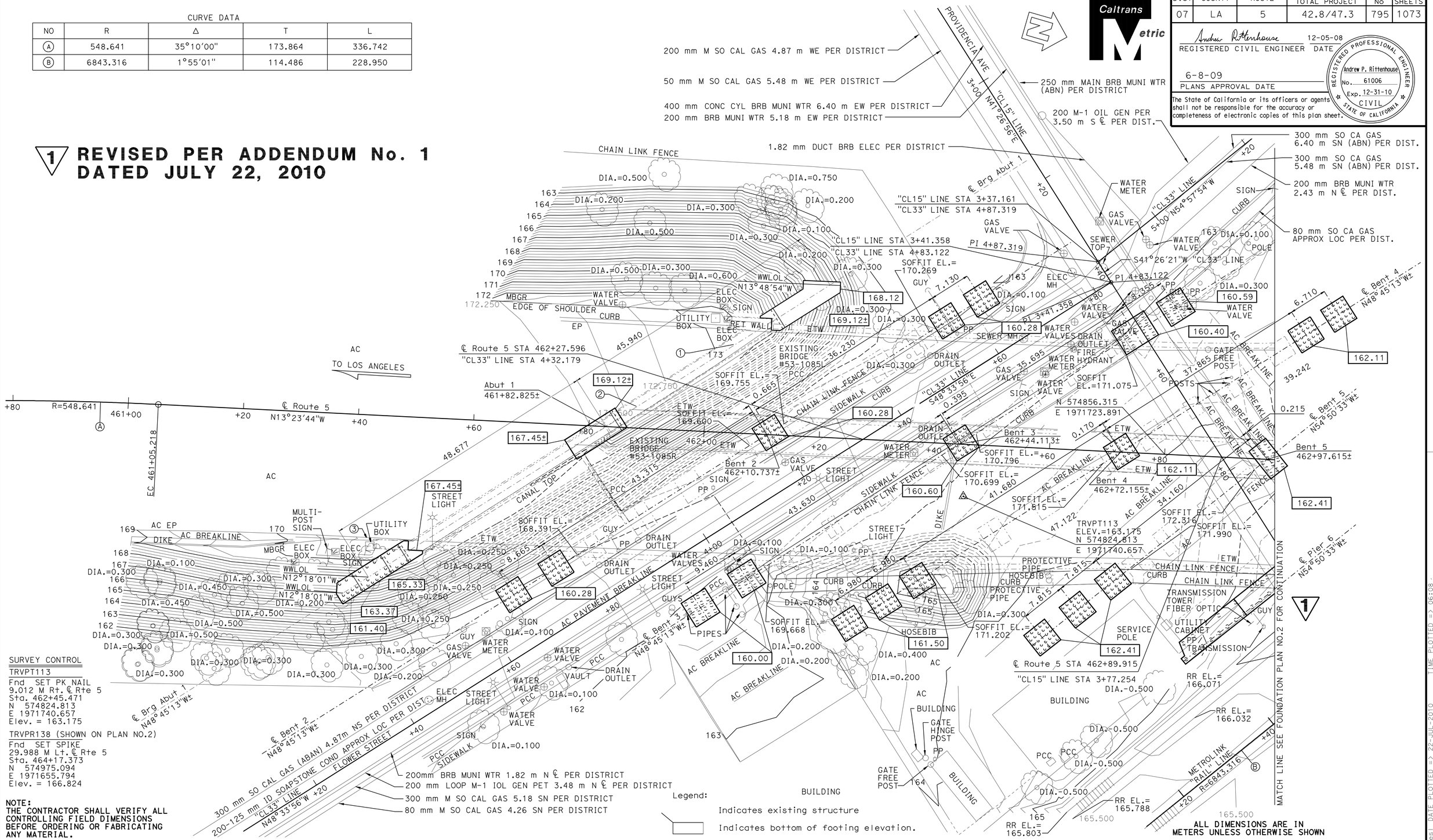

SURVEY CONTROL

TRVPT113
Fnd SET PK NAIL
9.012 M Rt. ℄ Rte 5
Sta. 462+45.471
N 574824.813
E 1971740.657
Elev. = 163.175

TRVPR138 (SHOWN ON PLAN NO.2)
Fnd SET SPIKE
29.988 M Lt. ℄ Rte 5
Sta. 464+17.373
N 574975.094
E 1971655.794
Elev. = 166.824

NOTE:
THE CONTRACTOR SHALL VERIFY ALL CONTROLLING FIELD DIMENSIONS BEFORE ORDERING OR FABRICATING ANY MATERIAL.

ALL DIMENSIONS ARE IN METERS UNLESS OTHERWISE SHOWN

PRELIMINARY INVESTIGATION SECTION

SCALE	VERT. DATUM NAVD88	PHOTOGRAMMETRY AS OF:		
1:300	HORZ. DATUM NAD83 (1991.35)	SURVEYED	BY DISTRICT	DRAFTED BY T.ZOLNIKOVA 05/2005
ALIGNMENT TIES DIST.TRAVERSE SHEET		FIELD CHECKED BY		CHECKED BY F.BANDA 05/2005

	BY	CHECKED
DESIGN	Ulysses Smpardos	C. Chan/A. Rittenhouse
DETAILS	Steven Schenck	Ulysses Smpardos
QUANTITIES	E. Hall/A. Logus	R. Odell/D. Kubochi

STATE OF CALIFORNIA DEPARTMENT OF TRANSPORTATION

DIVISION OF STRUCTURES STRUCTURE DESIGN 15

BRIDGE NO. 53-1085
KILOMETER POST 46.1

PROVIDENCIA AVE OH
FOUNDATION PLAN NO. 1

STRUCTURES FOUNDATION PLAN SHEET (METRIC) (REV.12-1-01)

ORIGINAL SCALE IN MILLIMETERS FOR REDUCED PLANS 0 10 20 30 40 50 60 70 80 90 100

CU 07
EA 121841

DISREGARD PRINTS BEARING EARLIER REVISION DATES

REVISION DATES (PRELIMINARY STAGE ONLY) 05-23-05 11-1-08 11-14-08 1-23-09 3-3-09 2-18-09 2-25-09

SHEET 6 OF 152

USERNAME => trmikesl DATE PLOTTED => 22-JUL-2010 TIME PLOTTED => 06:08

FILE => 53-1085-e-fp101.add

DIST	COUNTY	ROUTE	KILOMETER POST TOTAL PROJECT	SHEET No	TOTAL SHEETS
07	LA	5	42.8/47.3	796	1073

Andrew P. Rittenhouse 12-05-08
REGISTERED CIVIL ENGINEER DATE

6-8-09
PLANS APPROVAL DATE

REGISTERED PROFESSIONAL ENGINEER Andrew P. Rittenhouse No. 61006 Exp. 12-31-10 CIVIL STATE OF CALIFORNIA

The State of California or its officers or agents shall not be responsible for the accuracy or completeness of electronic copies of this plan sheet.

Caltrans Metric

CURVE DATA

NO	R	Δ	T	L
Ⓒ	548.641	38°52'00"	193.566	336.742

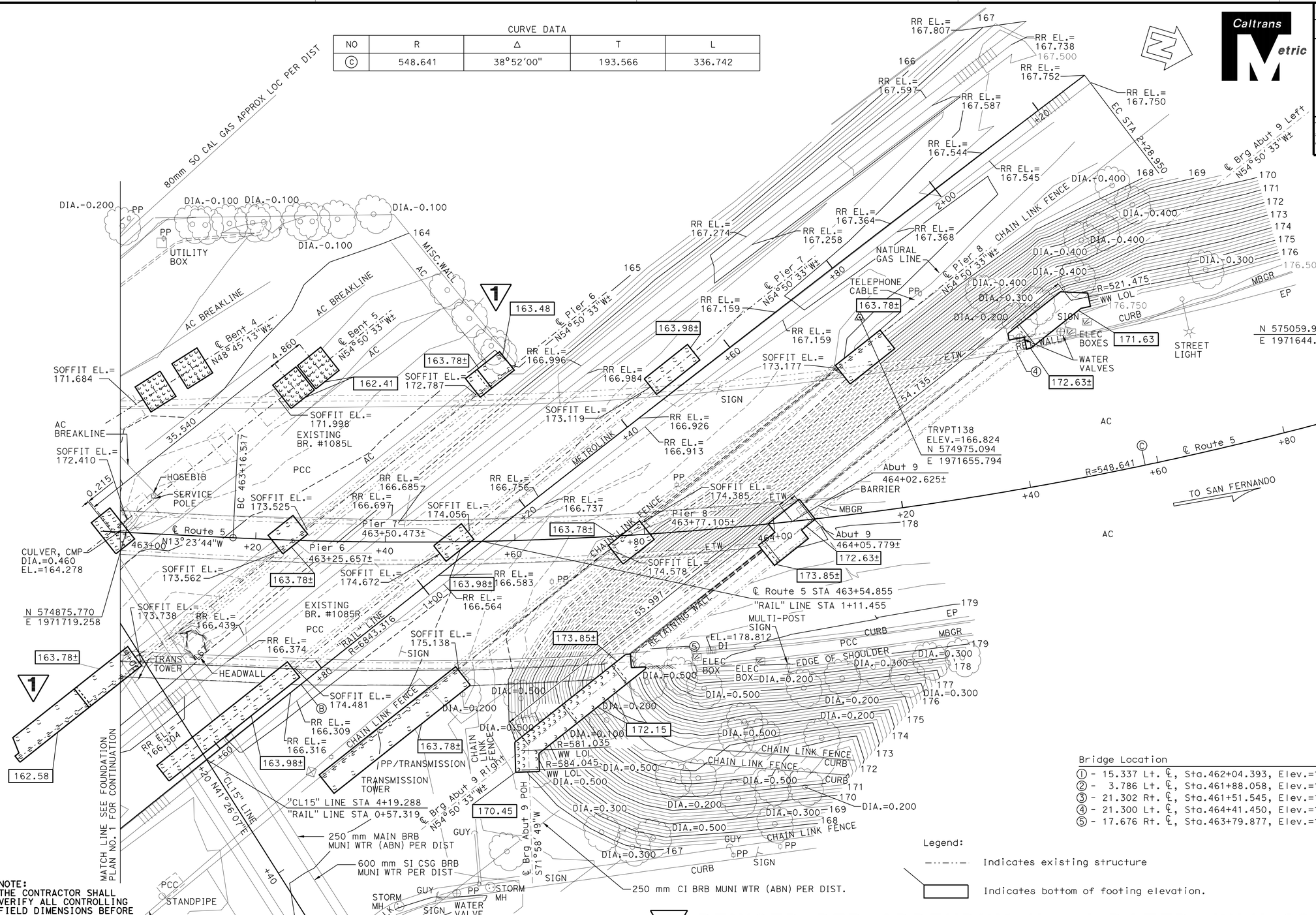

Bridge Location

① - 15.337 Lt. ℄, Sta.462+04.393, Elev.=173.106 ±
② - 3.786 Lt. ℄, Sta.461+88.058, Elev.=172.585 ±
③ - 21.302 Rt. ℄, Sta.461+51.545, Elev.=170.881 ±
④ - 21.300 Lt. ℄, Sta.464+41.450, Elev.=176.537 ±
⑤ - 17.676 Rt. ℄, Sta.463+79.877, Elev.=178.793 ±

Legend:

-·-·-·- Indicates existing structure

▭ Indicates bottom of footing elevation.

NOTE:
THE CONTRACTOR SHALL VERIFY ALL CONTROLLING FIELD DIMENSIONS BEFORE ORDERING OR FABRICATING ANY MATERIAL.

1 REVISED PER ADDENDUM No. 1 DATED JULY 22, 2010

ALL DIMENSIONS ARE IN METERS UNLESS OTHERWISE SHOWN

PRELIMINARY INVESTIGATION SECTION

SCALE 1:300	VERT. DATUM NAVD88	PHOTOGRAMMETRY AS OF:	
HORZ. DATUM NAD83 (1991.35)	SURVEYED	BY DISTRICT	DRAFTED BY T.ZOLNIKOVA 05/2005
ALIGNMENT TIES DIST.TRAVERSE SHEET	FIELD CHECKED BY		CHECKED BY F.BANDA 05/2005

STRUCTURES FOUNDATION PLAN SHEET (METRIC) (REV.12-1-01)

	BY	CHECKED
DESIGN	Ulysses Smpardos	C. Chan/A. Rittenhouse
DETAILS	Steven Schenck	Ulysses Smpardos
QUANTITIES	E. Hall	R. Odell

STATE OF CALIFORNIA
DEPARTMENT OF TRANSPORTATION

DIVISION OF STRUCTURES
STRUCTURE DESIGN 15

BRIDGE NO. 53-1085
KILOMETER POST 46.1

PROVIDENCIA AVE OH
FOUNDATION PLAN NO. 2

CU 07
EA 121841

DISREGARD PRINTS BEARING EARLIER REVISION DATES

REVISION DATES (PRELIMINARY STAGE ONLY): 05-03-05 9-26-08 11-13-08 1-23-09 2-9-09 2-18-09 2-26-09 1-28-10

SHEET 7 OF 152

ORIGINAL SCALE IN MILLIMETERS FOR REDUCED PLANS 0 10 20 30 40 50 60 70 80 90 100

FILE => 53-1085-e-fp102.add

USERNAME => trmikes DATE PLOTTED => 22-JUL-2010 TIME PLOTTED => 06:08

Notes:
1. For "Section F-F" see "PIER DETAILS NO. 1" sheet.
2. For "Section G-G" see "PIER DETAILS NO. 2" sheet.
3. For details see "Pier 6 Footing Corner Reinforcement Detail" on "PIER DETAILS NO. 2" sheet.
4. For details not shown, see "PIER DETAILS NO. 3" and "PIER DETAILS NO. 4" sheets.
5. For shear key details, see "GIRDER DETAILS NO. 6" sheet.
6. Step dimension shown for location indicated only. Other step dimensions to be based on deck cross slope, profile grade and structure depth.
7. For "Pier 6 Footing Step Detail - Right Widen" see "PIER DETAILS NO. 2" sheet.
8. For "Pier 6 Footing Step Detail - Left Widen" see "PIER DETAILS NO. 2" sheet.

Legend:
-·-·- Indicates existing structure
* See "Offset Detail"
** Fiberglass handholes will be replaced with concrete manholes by others.

DIST	COUNTY	ROUTE	KILOMETER POST TOTAL PROJECT	SHEET No	TOTAL SHEETS
07	LA	5	42.8/47.3	847	1073

Andrew Rittenhouse 12-05-08
REGISTERED CIVIL ENGINEER DATE

6-8-09
PLANS APPROVAL DATE

REGISTERED PROFESSIONAL ENGINEER Andrew P. Rittenhouse No. 61006 Exp. 12-31-10 CIVIL STATE OF CALIFORNIA

The State of California or its officers or agents shall not be responsible for the accuracy or completeness of electronic copies of this plan sheet.

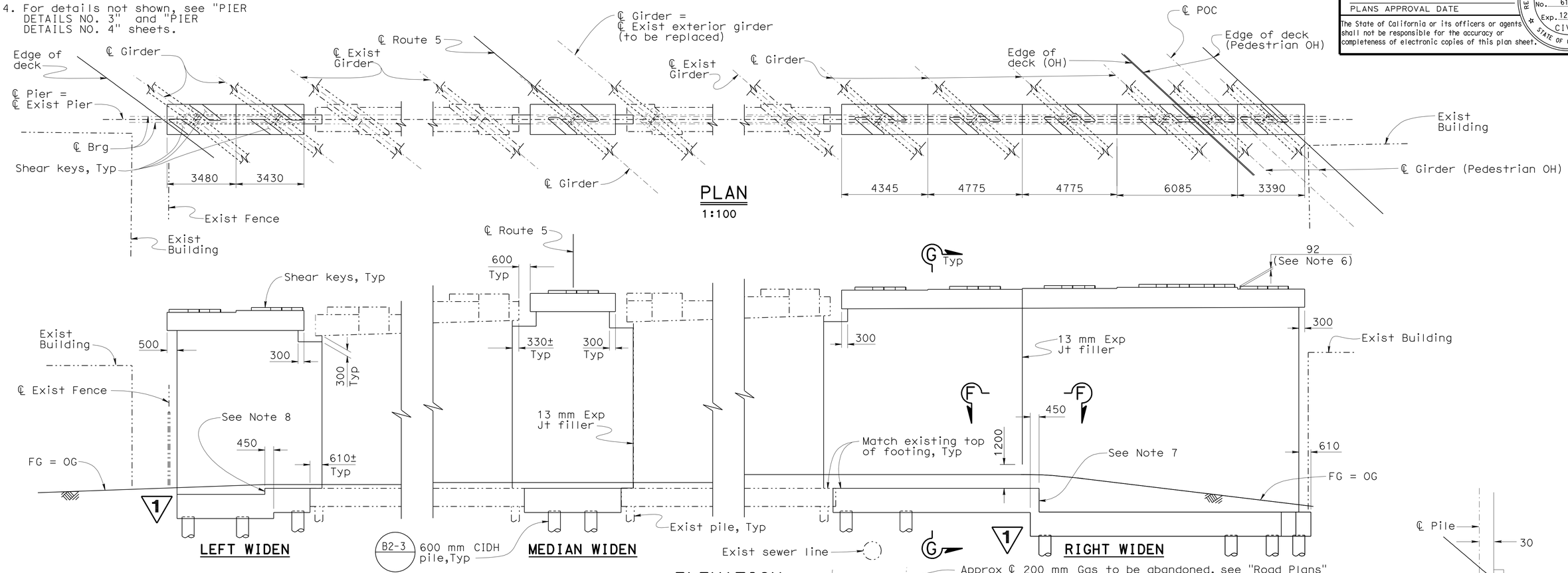

NOTE:
THE CONTRACTOR SHALL VERIFY ALL CONTROLLING FIELD DIMENSIONS BEFORE ORDERING OR FABRICATING ANY MATERIAL.

REVISED PER ADDENDUM No. 1 DATED JULY 22, 2010

Caltrans Metric

	BY	CHECKED
DESIGN	Ulysses Smpardos	F. Feng/C. Chan
DETAILS	Steven Schenck	F. Feng/C. Chan
QUANTITIES	E. Hall	R. Odell

STATE OF CALIFORNIA
DEPARTMENT OF TRANSPORTATION

DIVISION OF ENGINEERING SERVICES
STRUCTURE DESIGN
DESIGN BRANCH 15

BRIDGE NO. 53-1085
KILOMETER POST 46.1

PROVIDENCIA AVENUE OH (WIDEN)
PIER 6 LAYOUT

ALL DIMENSIONS ARE IN MILLIMETERS UNLESS OTHERWISE SHOWN

ORIGINAL SCALE IN MILLIMETERS FOR REDUCED PLANS 0 10 20 30 40 50 60 70 80 90 100

CU 07
EA 121841

DISREGARD PRINTS BEARING EARLIER REVISION DATES

REVISION DATES: 5-27-08 9-11-08 10-28-08 11-14-08 1-23-09 1-24-09 2-24-09 6-3-09 1-29-10

SHEET 58 OF 152

FILE => 53-1085-k-p21-1o6.add

STRUCTURES DESIGN DETAIL SHEET (METRIC) (REV.03-17-04)

USERNAME => trmikest DATE PLOTTED => 21-JUL-2010 TIME PLOTTED => 14:09

DIST	COUNTY	ROUTE	KILOMETER POST TOTAL PROJECT	SHEET No	TOTAL SHEETS
07	LA	5	42.8/47.3	851	1073

REGISTERED CIVIL ENGINEER — DATE 12-05-08

6-8-09
PLANS APPROVAL DATE

The State of California or its officers or agents shall not be responsible for the accuracy or completeness of electronic copies of this plan sheet.

REGISTERED PROFESSIONAL ENGINEER — Andrew P. Rittenhouse — No. 61006 — Exp. 12-31-10 — CIVIL — STATE OF CALIFORNIA

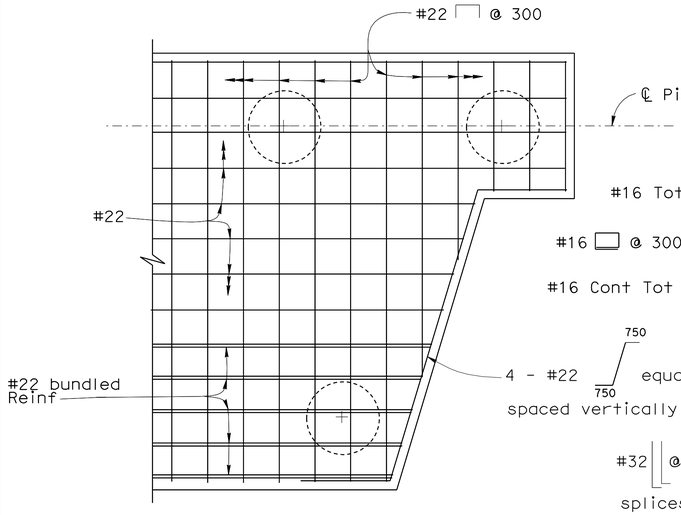

TOP REINFORCEMENT

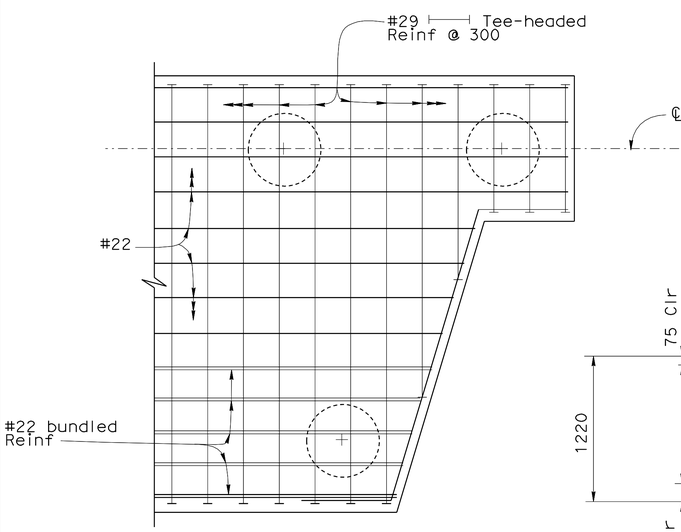

BOTTOM REINFORCEMENT

PIER 6 FOOTING CORNER REINFORCEMENT DETAIL

1:25

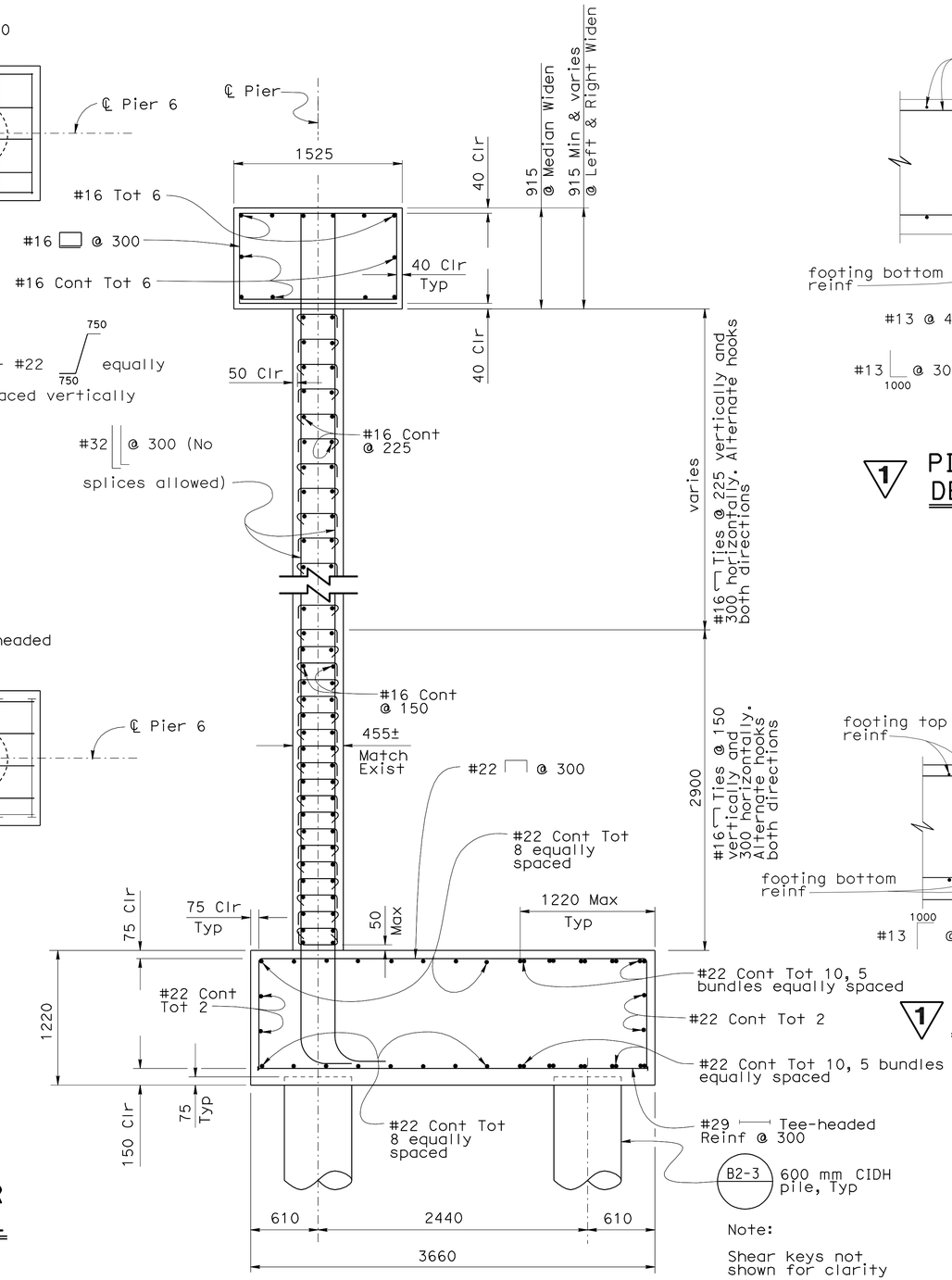

SECTION G-G

1:25

Note:

Shear keys not shown for clarity

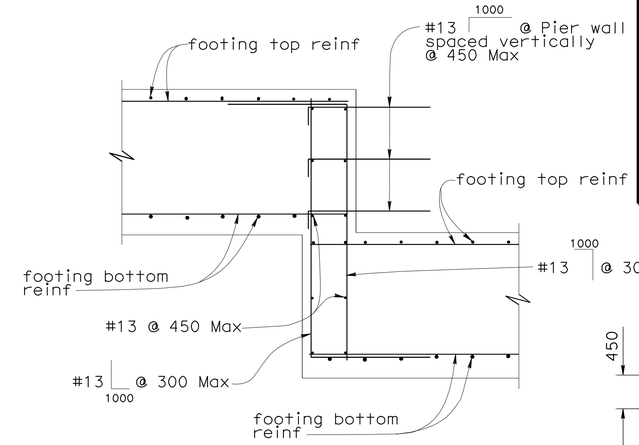

1 PIER 6 FOOTING STEP DETAIL - RIGHT WIDEN

1:25

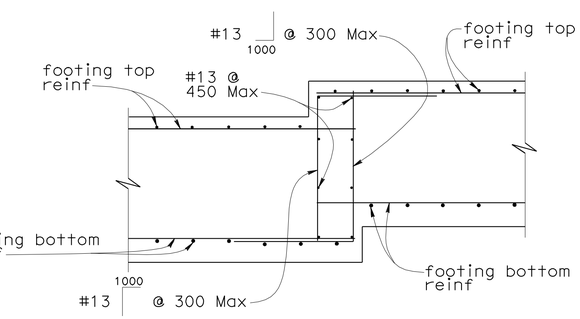

1 PIER 6 FOOTING STEP DETAIL - LEFT WIDEN

1:25

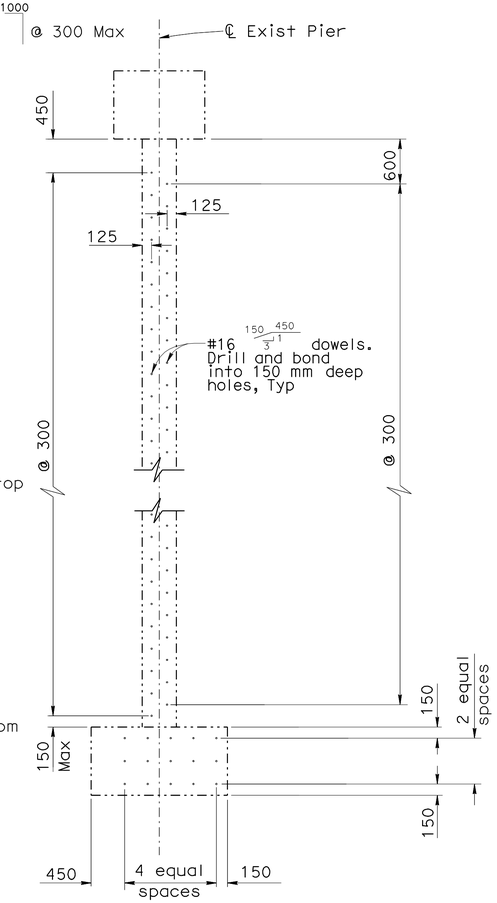

Note:

For location of dowels, see "PIER DETAILS NO. 3" and "PIER DETAILS NO. 4" sheets

DOWEL LAYOUT AT EXISTING PIERS 6 & 8

1:40

Legend:

—·—·— Indicates existing structure

NOTE:
THE CONTRACTOR SHALL VERIFY ALL CONTROLLING FIELD DIMENSIONS BEFORE ORDERING OR FABRICATING ANY MATERIAL.

1 **REVISED PER ADDENDUM No. 1 DATED JULY 22, 2010**

	BY	CHECKED
DESIGN	Ulysses Smpardos	F. Feng/C. Chan
DETAILS	Steven Schenck	F. Feng/C. Chan
QUANTITIES	E. Hall	R. Odell

STATE OF CALIFORNIA DEPARTMENT OF TRANSPORTATION

DIVISION OF ENGINEERING SERVICES STRUCTURE DESIGN — DESIGN BRANCH 15

BRIDGE NO. 53-1085 — KILOMETER POST 46.1

PROVIDENCIA AVENUE OH (WIDEN)

PIER DETAILS NO. 2

ALL DIMENSIONS ARE IN MILLIMETERS UNLESS OTHERWISE SHOWN

ORIGINAL SCALE IN MILLIMETERS FOR REDUCED PLANS 0 10 20 30 40 50 60 70 80 90 100

CU 07
EA 121841

DISREGARD PRINTS BEARING EARLIER REVISION DATES

REVISION DATES: 5-22-08 9-19-08 11-24-08 1-23-09 12-1-09 1-28-10

SHEET 62 OF 152

FILE => 53-1085-k-pie02.add

STRUCTURES DESIGN DETAIL SHEET (METRIC) (REV.03-17-04)

USERNAME => trmikesl DATE PLOTTED => 21-JUL-2010 TIME PLOTTED => 14:09

DIST	COUNTY	ROUTE	KILOMETER POST TOTAL PROJECT	SHEET No	TOTAL SHEETS
07	LA	5	42.8/47.3	873A	1073

Andrew Rittenhouse
REGISTERED CIVIL ENGINEER DATE

6-8-09
PLANS APPROVAL DATE

REGISTERED PROFESSIONAL ENGINEER
Andrew P. Rittenhouse
No. 61006
Exp. 12-31-10
CIVIL
STATE OF CALIFORNIA

The State of California or its officers or agents shall not be responsible for the accuracy or completeness of electronic copies of this plan sheet.

1

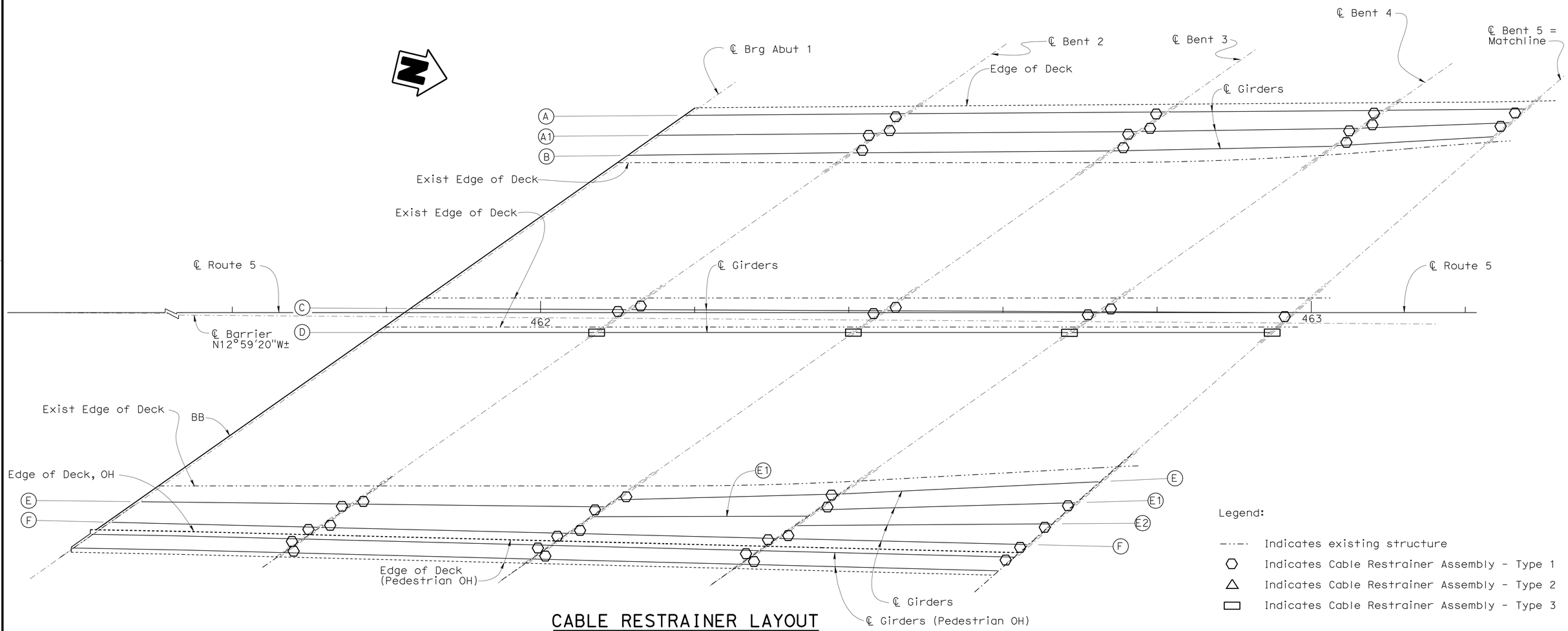

Legend:

- Indicates existing structure
- Indicates Cable Restrainer Assembly - Type 1
- Indicates Cable Restrainer Assembly - Type 2
- Indicates Cable Restrainer Assembly - Type 3

CABLE RESTRAINER LAYOUT

1:250

NOTE:
THE CONTRACTOR SHALL VERIFY ALL CONTROLLING FIELD DIMENSIONS BEFORE ORDERING OR FABRICATING ANY MATERIAL.

1 **ADDED PER ADDENDUM No. 1 DATED JULY 22, 2010**

Caltrans Metric

	BY	CHECKED
DESIGN	Ulysses Smpardos	Anthony Logus
DETAILS	Steven Schenck	Anthony Logus
QUANTITIES	Ulysses Smpardos	Anthony Logus

STATE OF CALIFORNIA
DEPARTMENT OF TRANSPORTATION

DIVISION OF ENGINEERING SERVICES
STRUCTURE DESIGN
DESIGN BRANCH 15

BRIDGE NO. 53-1085
KILOMETER POST 46.1

PROVIDENCIA AVENUE OH (WIDEN)
CABLE RESTRAINER LAYOUT NO. 1

ALL DIMENSIONS ARE IN MILLIMETERS UNLESS OTHERWISE SHOWN

ORIGINAL SCALE IN MILLIMETERS FOR REDUCED PLANS 0 10 20 30 40 50 60 70 80 90 100

CU 07
EA 121841

DISREGARD PRINTS BEARING EARLIER REVISION DATES

REVISION DATES: 9-24-09, 10-5-09, 10-27-09, 11-12-09, 1-28-10

SHEET 84A OF 152

FILE => 53-1085-z-ea101.add

STRUCTURES DESIGN DETAIL SHEET (METRIC) (REV.03-17-04)

USERNAME => trmikesl DATE PLOTTED => 21-JUL-2010 TIME PLOTTED => 14:09

DIST	COUNTY	ROUTE	KILOMETER POST TOTAL PROJECT	SHEET No	TOTAL SHEETS
07	LA	5	42.8/47.3	873B	1073

Andrew Rittenhouse
REGISTERED CIVIL ENGINEER DATE

6-8-09
PLANS APPROVAL DATE

REGISTERED PROFESSIONAL ENGINEER
Andrew P. Rittenhouse
No. 61006
Exp. 12-31-10
CIVIL
STATE OF CALIFORNIA

The State of California or its officers or agents shall not be responsible for the accuracy or completeness of electronic copies of this plan sheet.

1

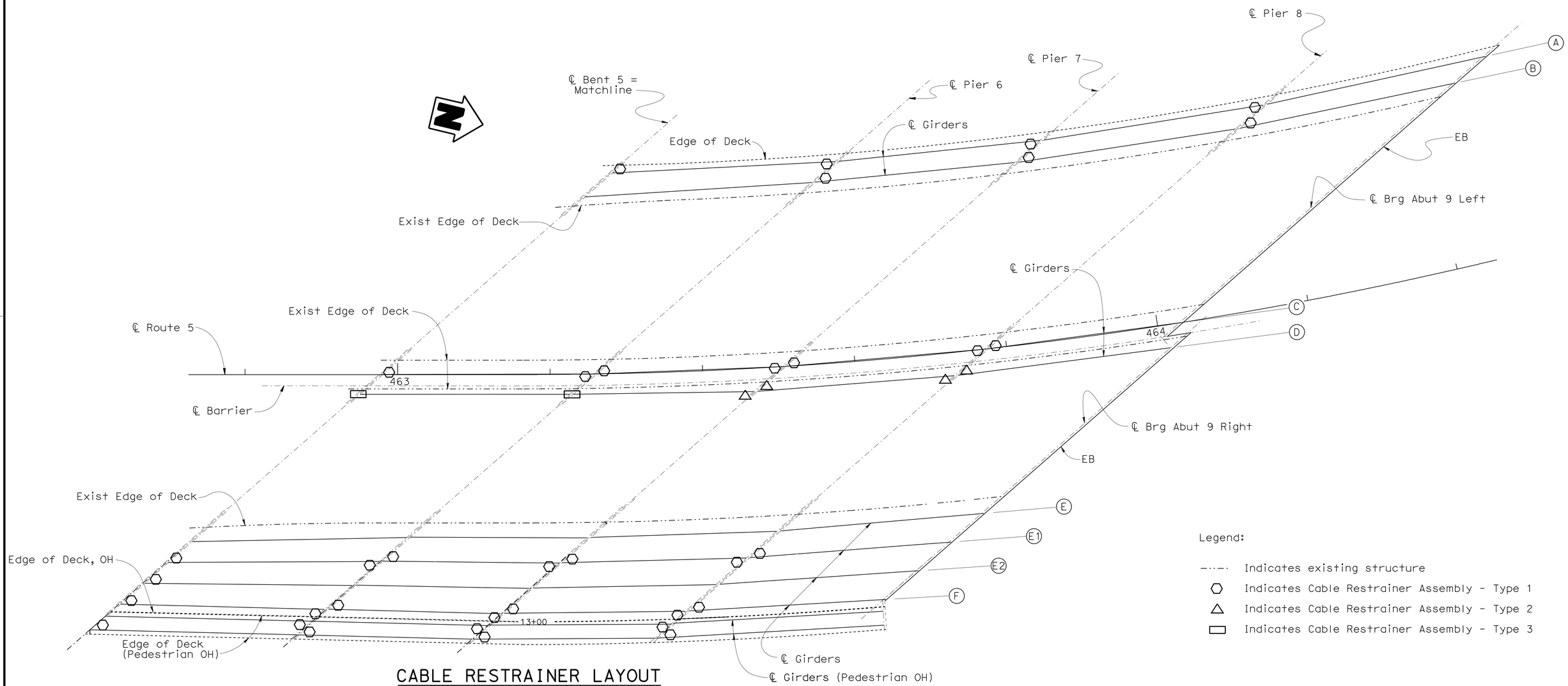

CABLE RESTRAINER LAYOUT

1:250

NOTE:
THE CONTRACTOR SHALL VERIFY ALL CONTROLLING FIELD DIMENSIONS BEFORE ORDERING OR FABRICATING ANY MATERIAL.

1 **ADDED PER ADDENDUM No. 1 DATED JULY 22, 2010**

Caltrans Metric

	BY	CHECKED
DESIGN	Ulysses Smpardos	Anthony Logus
DETAILS	Steven Schenck	Anthony Logus
QUANTITIES	Ulysses Smpardos	Anthony Logus

STATE OF CALIFORNIA
DEPARTMENT OF TRANSPORTATION

DIVISION OF ENGINEERING SERVICES
STRUCTURE DESIGN
DESIGN BRANCH 15

BRIDGE NO. 53-1085
KILOMETER POST 46.1

PROVIDENCIA AVENUE OH (WIDEN)
CABLE RESTRAINER LAYOUT NO. 2

ALL DIMENSIONS ARE IN MILLIMETERS UNLESS OTHERWISE SHOWN

ORIGINAL SCALE IN MILLIMETERS FOR REDUCED PLANS 0 10 20 30 40 50 60 70 80 90 100

CU 07
EA 121841

DISREGARD PRINTS BEARING EARLIER REVISION DATES

REVISION DATES: 09-24-09 10-06-09 10-22-09 1-28-10

SHEET 84B OF 152

FILE => 53-1085-z-ea102.add

STRUCTURES DESIGN DETAIL SHEET (METRIC) (REV.03-17-04)

USERNAME => trmikest DATE PLOTTED => 21-JUL-2010 TIME PLOTTED => 14:09

DIST	COUNTY	ROUTE	KILOMETER POST TOTAL PROJECT	SHEET No	TOTAL SHEETS
07	LA	5	42.8/47.3	873C	1073

Andrew P. Rittenhouse
REGISTERED CIVIL ENGINEER DATE

6-8-09
PLANS APPROVAL DATE

REGISTERED PROFESSIONAL ENGINEER Andrew P. Rittenhouse No. 61006 Exp. 12-31-10 CIVIL STATE OF CALIFORNIA

The State of California or its officers or agents shall not be responsible for the accuracy or completeness of electronic copies of this plan sheet.

1

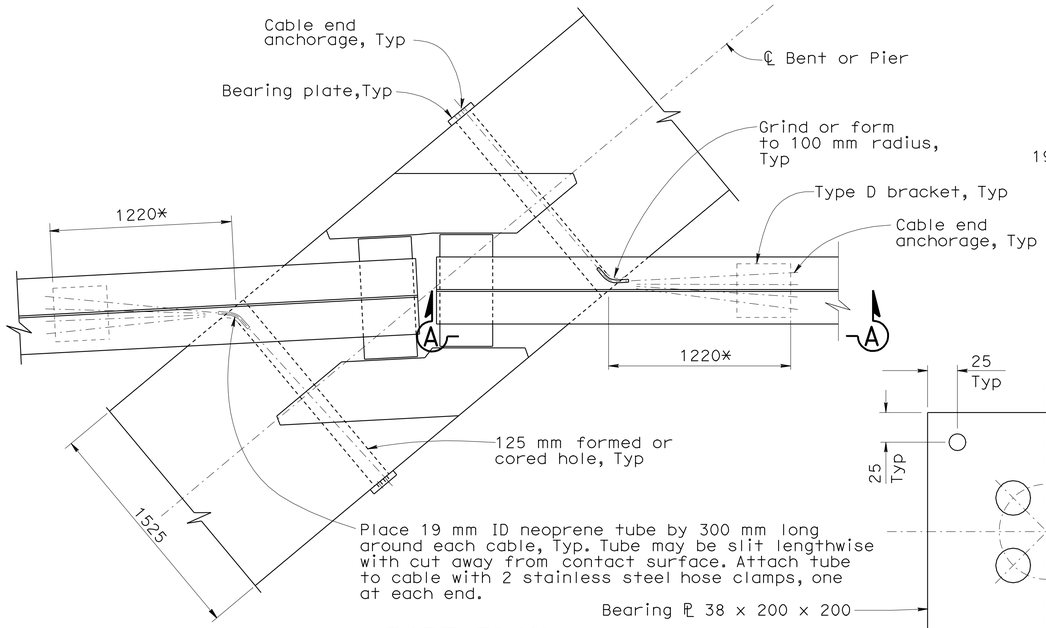

PART PLAN
1:20

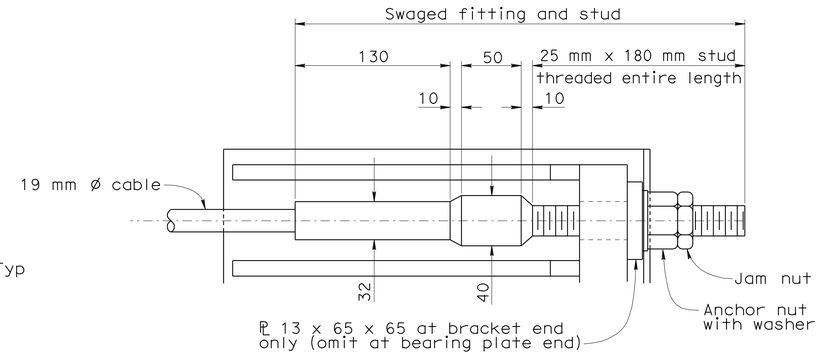

CABLE END ANCHORAGE
1:2.5

ANCHORAGE PROCEDURE AT ONE END OF RESTRAINER UNIT

1. Snug each cable to remove slack from system.
2. Back nut off 38 mm.
3. Set anchor nut, washer and jam nut each end.

Notes:

1. Brackets, bearing plates, restrainer cables and cable end anchorages shall be galvanized after fabrication.
2. Seal joints between bracket and girder flange with silicone - based caulk sealant.

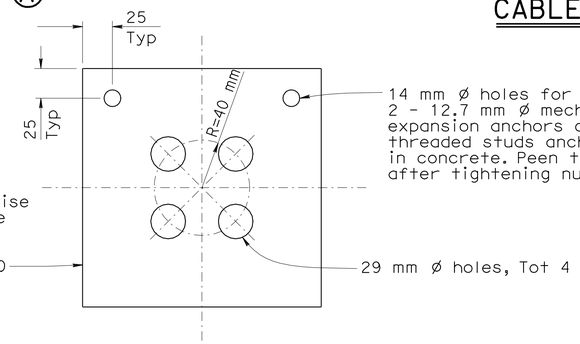

BEARING PLATE DETAIL
1:2.5

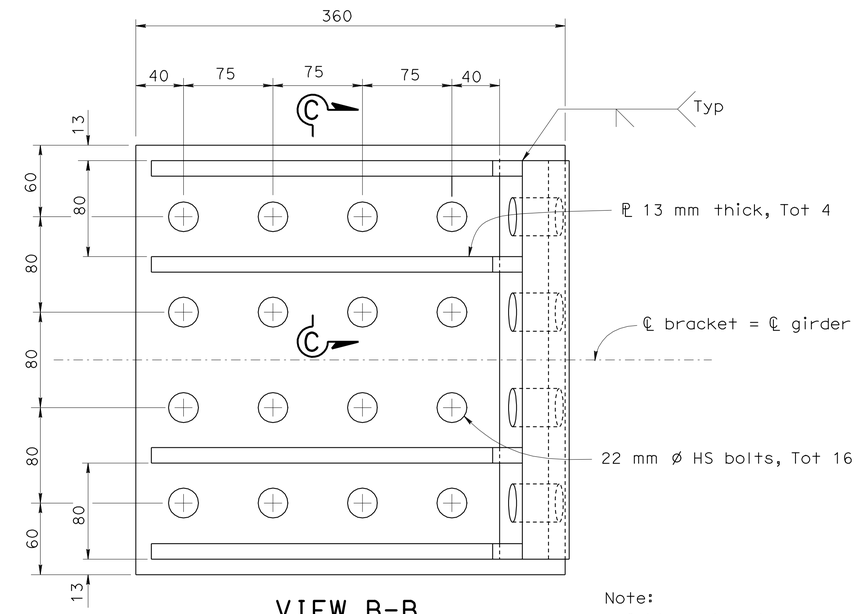

VIEW B-B
1:2.5

Legend:

* - Bracket may be shifted 75 mm Max to clear stiffeners

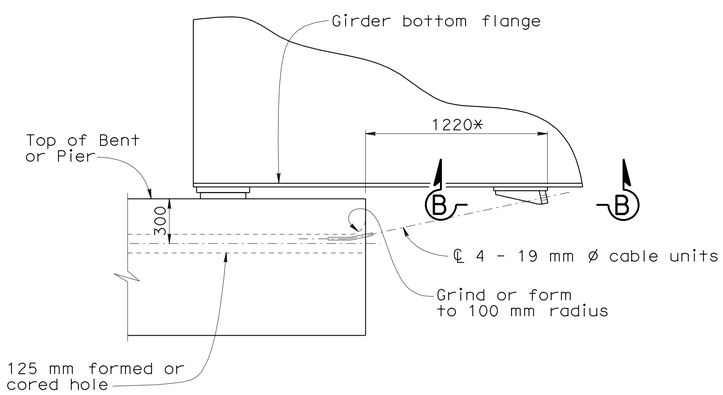

FULL DEPTH GIRDER

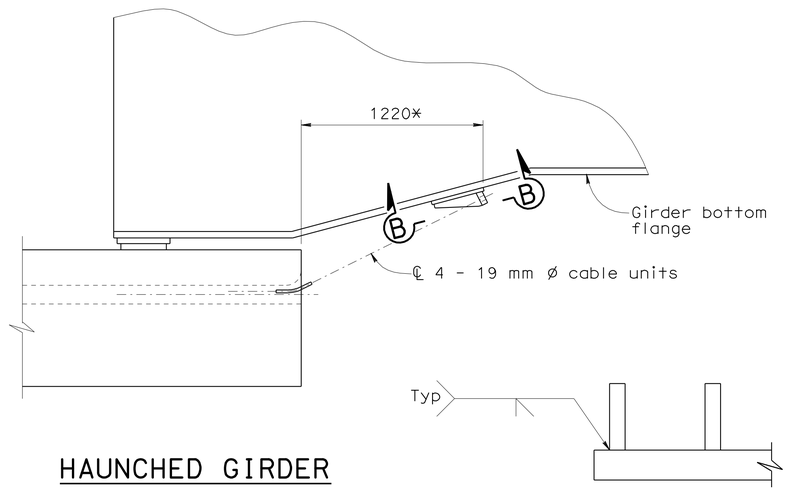

HAUNCHED GIRDER

VIEW A-A
1:20

PART SECTION C-C
1:2.5

Note:
Cable end anchorages not shown.

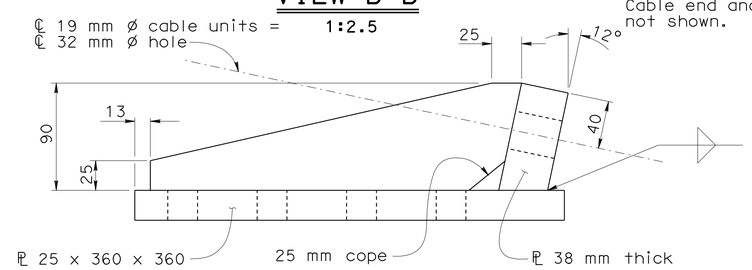

ELEVATION - TYPE D BRACKET
1:2.5

NOTE:
THE CONTRACTOR SHALL VERIFY ALL CONTROLLING FIELD DIMENSIONS BEFORE ORDERING OR FABRICATING ANY MATERIAL.

1 **ADDED PER ADDENDUM No. 1 DATED JULY 22, 2010**

Caltrans Metric

	BY	CHECKED
DESIGN	Ulysses Smpardos	Anthony Logus
DETAILS	Steven Schenck	Anthony Logus
QUANTITIES	Ulysses Smpardos	Anthony Logus

STATE OF CALIFORNIA
DEPARTMENT OF TRANSPORTATION

DIVISION OF ENGINEERING SERVICES
STRUCTURE DESIGN
DESIGN BRANCH 15

BRIDGE NO. 53-1085
KILOMETER POST 46.1

PROVIDENCIA AVENUE OH (WIDEN)
CABLE RESTRAINER ASSEMBLY - TYPE 1

ALL DIMENSIONS ARE IN MILLIMETERS UNLESS OTHERWISE SHOWN

ORIGINAL SCALE IN MILLIMETERS FOR REDUCED PLANS 0 10 20 30 40 50 60 70 80 90 100

CU 07
EA 121841

DISREGARD PRINTS BEARING EARLIER REVISION DATES

REVISION DATES: 10-08-09 10-22-09 11-12-09 1-28-10

SHEET 84C OF 152

FILE => 53-1085-z-erd01.add

STRUCTURES DESIGN DETAIL SHEET (METRIC) (REV.03-17-04)

USERNAME => trmikest DATE PLOTTED => 21-JUL-2010 TIME PLOTTED => 14:10

DIST	COUNTY	ROUTE	KILOMETER POST TOTAL PROJECT	SHEET No	TOTAL SHEETS
07	LA	5	42.8/47.3	873D	1073

Andrew P. Rittenhouse
REGISTERED CIVIL ENGINEER DATE

6-8-09
PLANS APPROVAL DATE

REGISTERED PROFESSIONAL ENGINEER Andrew P. Rittenhouse No. 61006 Exp. 12-31-10 CIVIL STATE OF CALIFORNIA

The State of California or its officers or agents shall not be responsible for the accuracy or completeness of electronic copies of this plan sheet.

1

ANCHORAGE PROCEDURE AT ONE END OF RESTRAINER UNIT

1. Snug each cable to remove slack from system.
2. Back nut off 38 mm.
3. Set anchor nut, washer and jam nut each end.

Notes:

1. For "Section C-C" and other details not shown or noted, see "CABLE RESTRAINER ASSEMBLY - TYPE 1" sheet.
2. Brackets, bearing plates, restrainer cables and cable end anchorages shall be galvanized after fabrication.
3. Seal joints between bracket and girder flange with silicone-based caulk sealant.

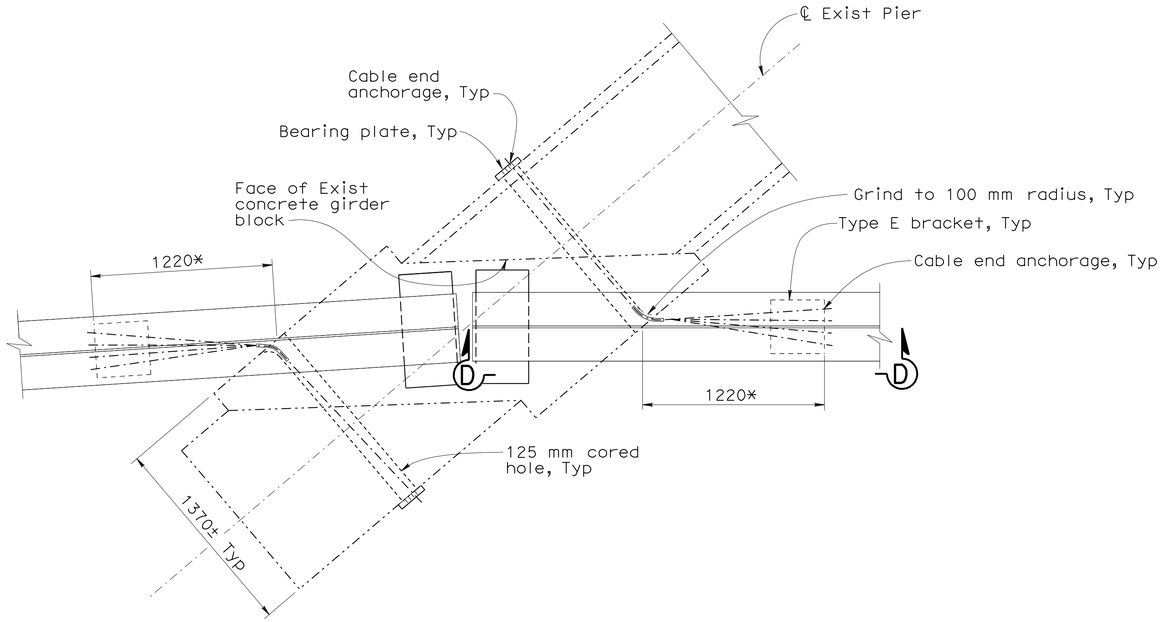

PART PLAN
1:20

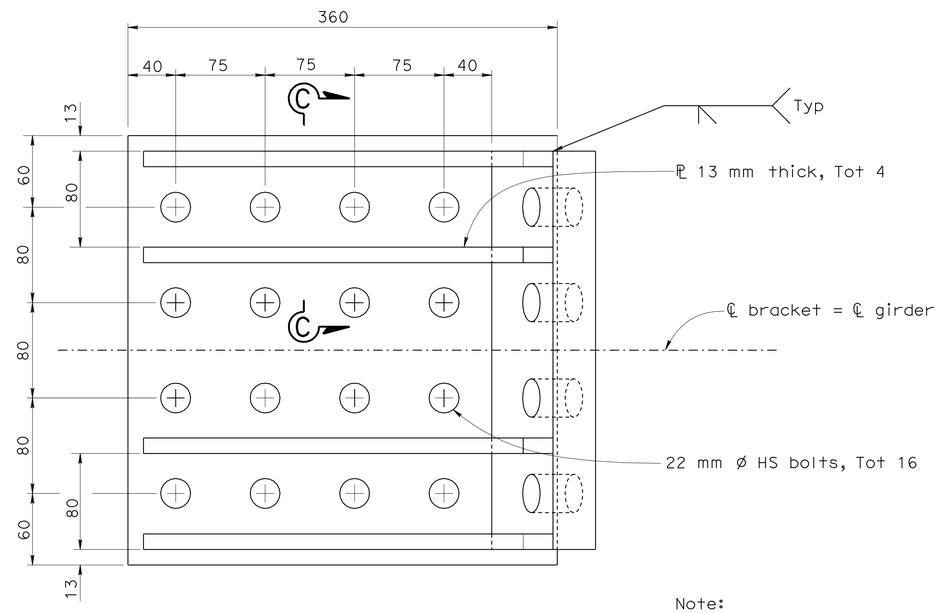

VIEW E-E
1:2.5

Note:
Cable end anchorages not shown.

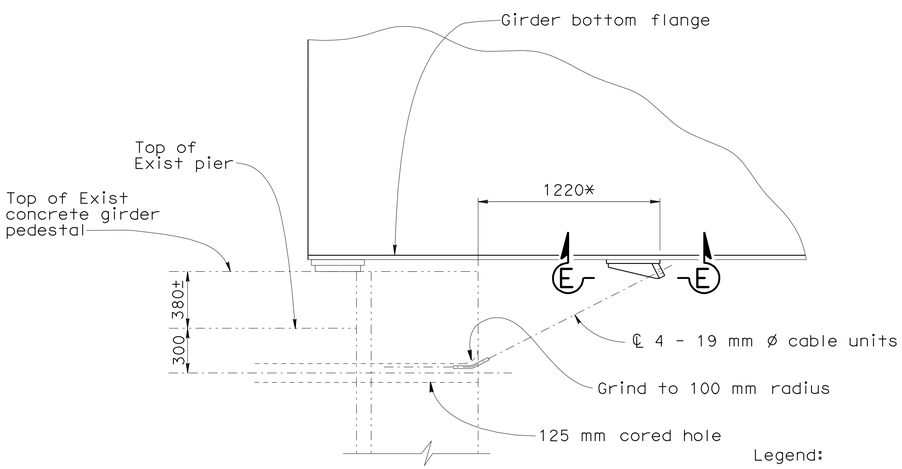

VIEW D-D
1:20

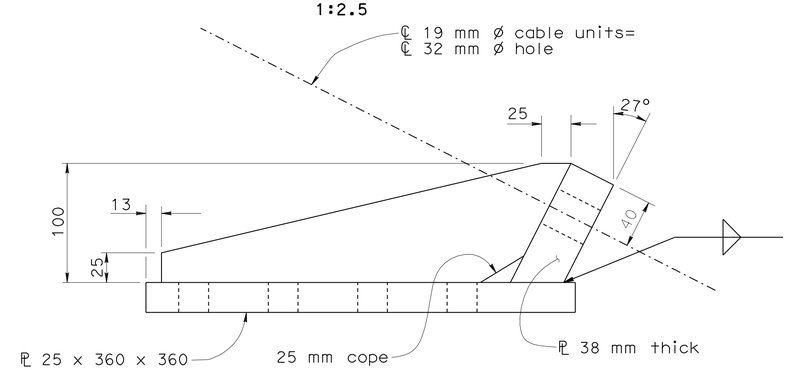

ELEVATION - TYPE E BRACKET
1:2.5

Legend:

-·-·-·- Indicates existing structure

* - Bracket may be shifted 75 mm Max to clear stiffeners

NOTE:
THE CONTRACTOR SHALL VERIFY ALL CONTROLLING FIELD DIMENSIONS BEFORE ORDERING OR FABRICATING ANY MATERIAL.

1 **ADDED PER ADDENDUM No. 1 DATED JULY 22, 2010**

Caltrans Metric

	BY	CHECKED
DESIGN	Ulysses Smpardos	Anthony Logus
DETAILS	Steven Schenck	Anthony Logus
QUANTITIES	Ulysses Smpardos	Anthony Logus

STATE OF CALIFORNIA
DEPARTMENT OF TRANSPORTATION

DIVISION OF ENGINEERING SERVICES
STRUCTURE DESIGN
DESIGN BRANCH 15

BRIDGE NO. 53-1085
KILOMETER POST 46.1

PROVIDENCIA AVENUE OH (WIDEN)
CABLE RESTRAINER ASSEMBLY - TYPE 2

ALL DIMENSIONS ARE IN MILLIMETERS UNLESS OTHERWISE SHOWN

ORIGINAL SCALE IN MILLIMETERS FOR REDUCED PLANS 0 10 20 30 40 50 60 70 80 90 100

CU 07
EA 121841

DISREGARD PRINTS BEARING EARLIER REVISION DATES → 10-8-09 10-22-09 1-28-10

REVISION DATES

SHEET 84D OF 152

FILE => 53-1085-z-erd02.add

STRUCTURES DESIGN DETAIL SHEET (METRIC) (REV.03-17-04)

USERNAME => trmikes1 DATE PLOTTED => 21-JUL-2010 TIME PLOTTED => 14:10

DIST	COUNTY	ROUTE	KILOMETER POST TOTAL PROJECT	SHEET No	TOTAL SHEETS
07	LA	5	42.8/47.3	873E	1073

Andrew Rittenhouse
REGISTERED CIVIL ENGINEER DATE

6-8-09
PLANS APPROVAL DATE

REGISTERED PROFESSIONAL ENGINEER Andrew P. Rittenhouse No. 61006 Exp. 12-31-10 CIVIL STATE OF CALIFORNIA

The State of California or its officers or agents shall not be responsible for the accuracy or completeness of electronic copies of this plan sheet.

1

ANCHORAGE PROCEDURE AT ONE END OF RESTRAINER UNIT

1. Snug each cable to remove slack from system.
2. Back nut off 38 mm.
3. Set anchor nut, washer and jam nut each end.

Legend:

–·–·– Indicates existing structure
* - Bracket may be shifted 75 mm Max to clear stiffeners.
** - Varies with skew

Notes:

1. For "Cable End Anchorage" detail, see "CABLE RESTRAINER ASSEMBLY-TYPE 1" sheet.
2. Brackets, restrainer cables and cable end anchorages shall be galvanized after fabrication.
3. Seal joints between bracket and girder flange with silicone-based caulk sealant.

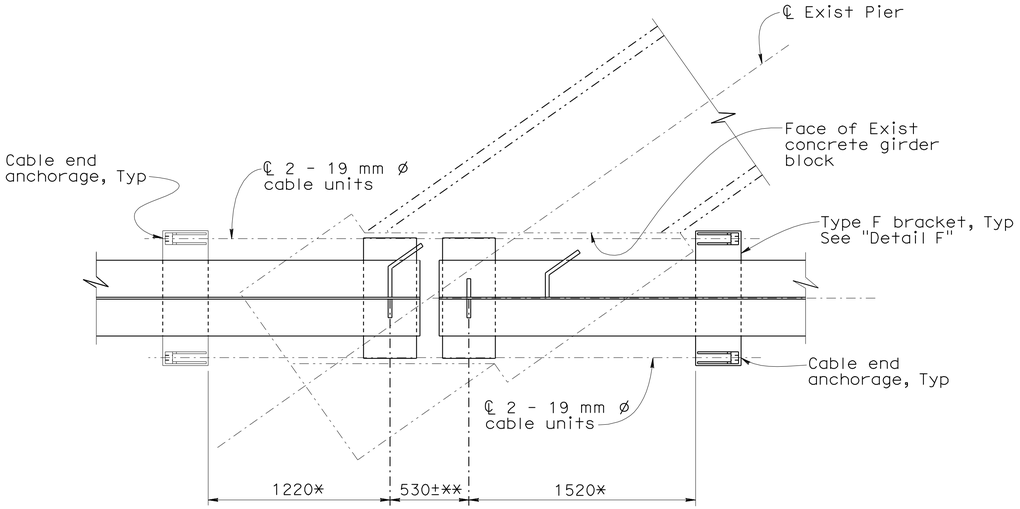

PART PLAN
1:20

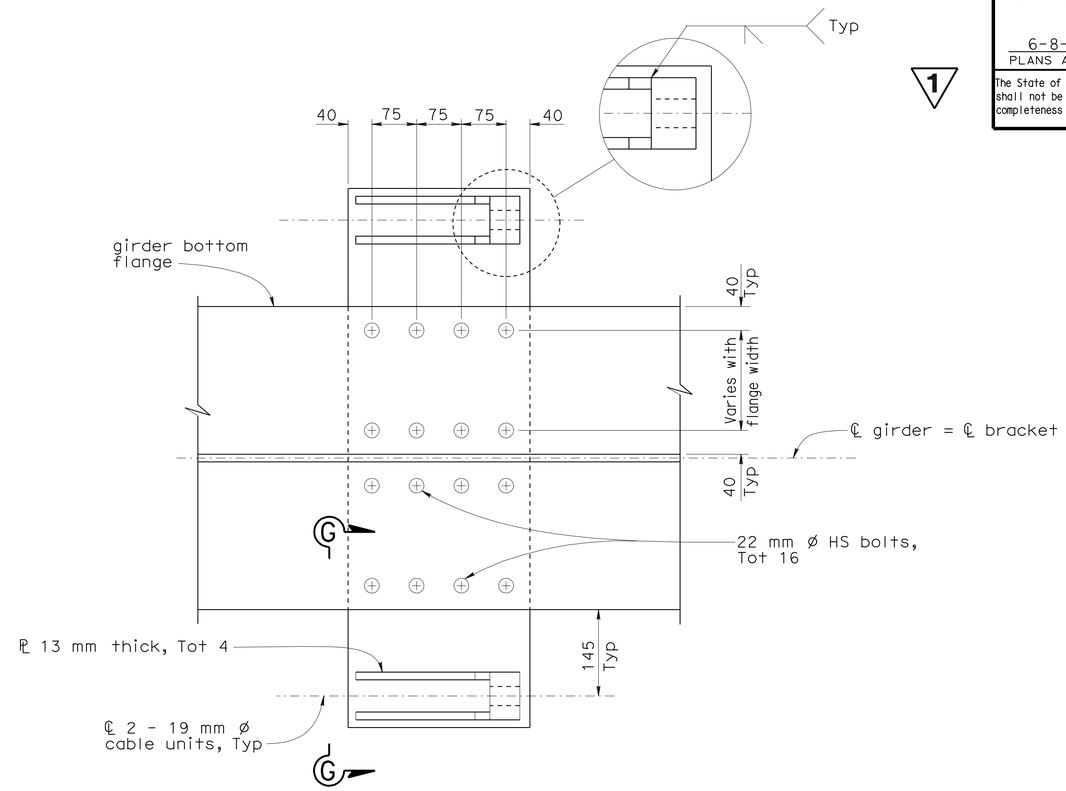

DETAIL F
1:5

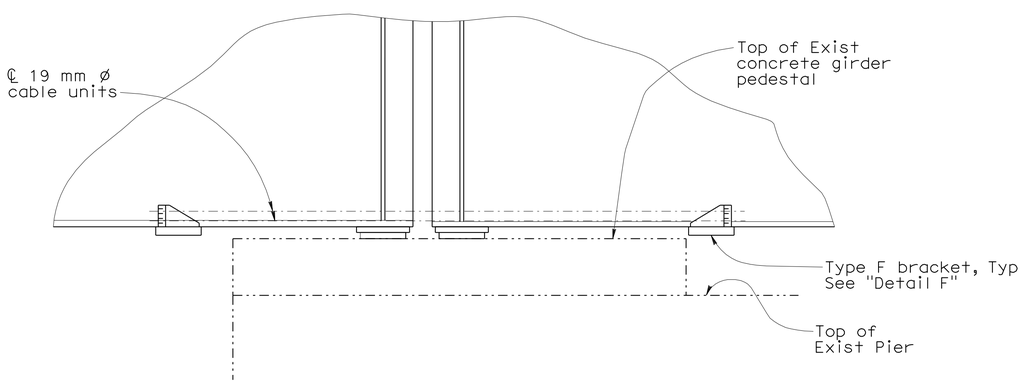

ELEVATION
1:20

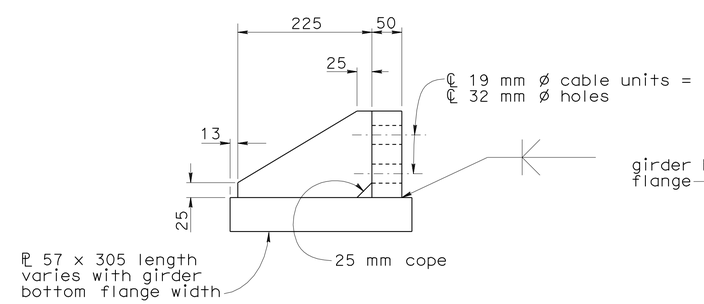

ELEVATION - TYPE F BRACKET
1:5

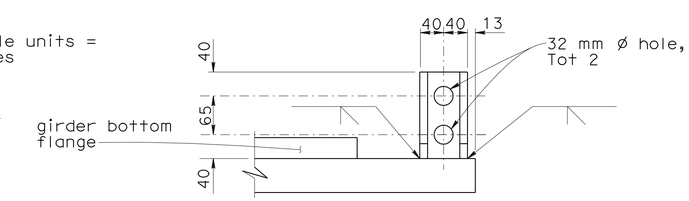

VIEW G-G
1:5

NOTE:
THE CONTRACTOR SHALL VERIFY ALL CONTROLLING FIELD DIMENSIONS BEFORE ORDERING OR FABRICATING ANY MATERIAL.

1 **ADDED PER ADDENDUM No. 1 DATED JULY 22, 2010**

	BY	CHECKED
DESIGN	Ulysses Smpardos	Anthony Logus
DETAILS	Steven Schenck	Anthony Logus
QUANTITIES	Ulysses Smpardos	Anthony Logus

STATE OF CALIFORNIA
DEPARTMENT OF TRANSPORTATION

DIVISION OF ENGINEERING SERVICES
STRUCTURE DESIGN
DESIGN BRANCH 15

BRIDGE NO. 53-1085
KILOMETER POST 46.1

PROVIDENCIA AVENUE OH (WIDEN)
CABLE RESTRAINER ASSEMBLY - TYPE 3

ALL DIMENSIONS ARE IN MILLIMETERS UNLESS OTHERWISE SHOWN

ORIGINAL SCALE IN MILLIMETERS FOR REDUCED PLANS 0 10 20 30 40 50 60 70 80 90 100

CU 07
EA 121841

DISREGARD PRINTS BEARING EARLIER REVISION DATES 10-28-09 10-27-09 1-28-10

REVISION DATES

SHEET 84E OF 152

FILE => 53-1085-z-erd03.add

STRUCTURES DESIGN DETAIL SHEET (METRIC) (REV.03-17-04)

USERNAME => trmikesl DATE PLOTTED => 21-JUL-2010 TIME PLOTTED => 14:10

DIST	COUNTY	ROUTE	KILOMETER POST TOTAL PROJECT	SHEET No	TOTAL SHEETS
07	LA	5	42.8/47.3	946	1073

Caltrans Metric

Andrew Rittenhouse 12-05-08
REGISTERED CIVIL ENGINEER DATE

6-8-09
PLANS APPROVAL DATE

REGISTERED PROFESSIONAL ENGINEER Andrew P. Rittenhouse No. 61006 Exp. 12-31-10 CIVIL STATE OF CALIFORNIA

The State of California or its officers or agents shall not be responsible for the accuracy or completeness of electronic copies of this plan sheet.

1

CURVE DATA				
No.	R	Δ	T	L
1	548.641	38°51'60"	193.566	372.171

(A) 465+48.946 ℄ "ROUTE 5" = 4+83.001 ℄ VERDUGO AVE.

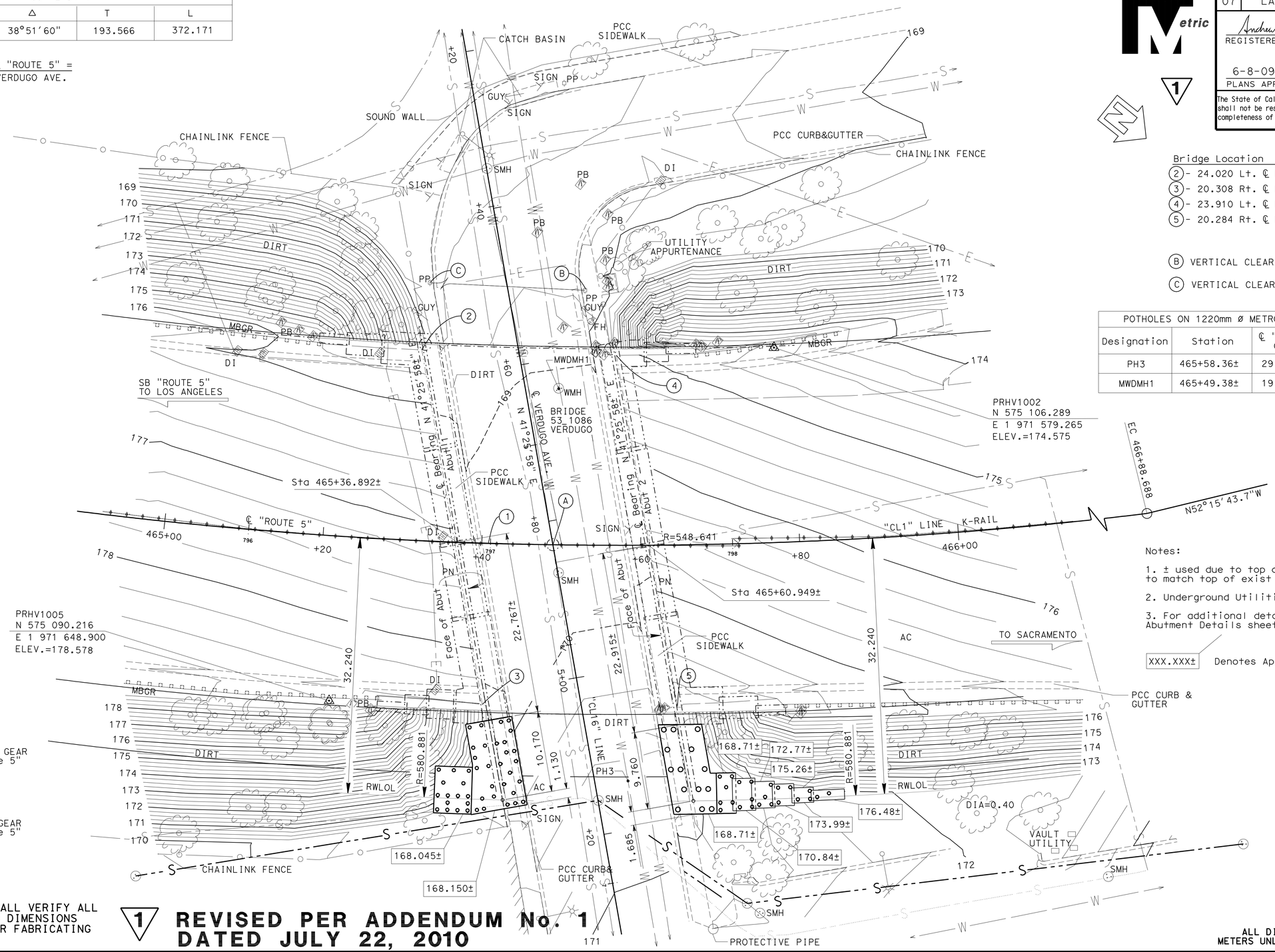

Bridge Location

(2) - 24.020 Lt. ℄ RTE5, Sta.465+31.287, Elev.=175.549 ±
(3) - 20.308 Rt. ℄ RTE5, Sta.465+40.679, Elev.=178.482 ±
(4) - 23.910 Lt. ℄ RTE5, Sta.465+56.887, Elev.=175.009 ±
(5) - 20.284 Rt. ℄ RTE5, Sta.465+64.372, Elev.=177.971 ±

(B) VERTICAL CLEARANCE = 10.185

(C) VERTICAL CLEARANCE = 10.185

POTHOLES ON 1220mm ø METROPOLITAN WATER DISTRICT UTILITY				
Designation	Station	℄ "Route 5" Offset	OG Elevation	Top of Pipe Elevation
PH3	465+58.36±	29.65± Rt	170.61±	168.17±
MWDMH1	465+49.38±	19.64± Lt	169.08±	166.82±

Notes:

1. ± used due to top of new abutment footing to match top of exist abutment footing.
2. Underground Utilities as shown are approximate
3. For additional details, see Abutment Layout and Abutment Details sheets.

XXX.XXX± Denotes Approximate Bottom Footing Elevation

SURVEY CONTROL

PRHV1005
Fnd CONTROL POINT GEAR
20.743 Rt. ℄ "Route 5"
Sta. 465+22.096
N 575 090.216
E 1 971 648.900
Elev. = 178.578

PRHV1002
Fnd CONTROLPOINT GEAR
24.519 Lt. ℄ "Route 5"
Sta. 465+77.664
N 575 106.289
E 1 971 579.265
Elev. = 174.575

NOTE:
THE CONTRACTOR SHALL VERIFY ALL CONTROLLING FIELD DIMENSIONS BEFORE ORDERING OR FABRICATING ANY MATERIAL.

1 **REVISED PER ADDENDUM No. 1 DATED JULY 22, 2010**

ALL DIMENSIONS ARE IN METERS UNLESS OTHERWISE SHOWN

PRELIMINARY INVESTIGATION SECTION					
SCALE 1:250	VERT. DATUM NAVD 88	PHOTOGRAMMETRY AS OF:			
HORZ. DATUM NAD 83	SURVEYED	BY H. REDERER 2-04	DRAFTED	BY M. SADAGHIANI 9-04	
ALIGNMENT TIES DIST. TRAV. SHEETS	FIELD CHECKED	BY	CHECKED	BY	

	BY	CHECKED
DESIGN	Hogni Setberg	Richard Yates
DETAILS	Herman Mauroschadt	Richard Yates
QUANTITIES	Jenny Zhang	James Ralston

STATE OF CALIFORNIA DEPARTMENT OF TRANSPORTATION

DIVISION OF STRUCTURES STRUCTURE DESIGN 15

BRIDGE NO. 53-1086
KILOMETER POST 46.5

VERDUGO AVENUE UC WIDEN & RETROFIT
FOUNDATION PLAN

STRUCTURES FOUNDATION PLAN SHEET (METRIC) (REV.12-1-01)

ORIGINAL SCALE IN MILLIMETERS FOR REDUCED PLANS 0 10 20 30 40 50 60 70 80 90 100

CU 07
EA 121841

DISREGARD PRINTS BEARING EARLIER REVISION DATES

REVISION DATES (PRELIMINARY STAGE ONLY): 5-20-07 9-27-07 1-14-08 6-11-08 10-16-08 11-14-08 12-19-08 6-11-09

SHEET 5 OF 39

FILE => 53-1086-b-fp1.add

USERNAME => ttmikesi DATE PLOTTED => 21-JUL-2010 TIME PLOTTED => 14:10

DIST	COUNTY	ROUTE	KILOMETER POST TOTAL PROJECT	SHEET No	TOTAL SHEETS
07	LA	5	42.8/47.3	1008	1073

Andrew Rittenhouse 12-05-08
REGISTERED CIVIL ENGINEER DATE

6-8-09
PLANS APPROVAL DATE

REGISTERED PROFESSIONAL ENGINEER
Andrew P. Rittenhouse
No. 61006
Exp. 12-31-10
CIVIL
STATE OF CALIFORNIA

The State of California or its officers or agents shall not be responsible for the accuracy or completeness of electronic copies of this plan sheet.

Caltrans now has a web site! To get to the web site, go to: http://www.dot.ca.gov

1

TABLE

	Reinforcement Zone				
	Ⓐ	Ⓑ	Ⓒ	Ⓓ	Ⓔ
Soil Reinforcement (size and spacing)	1-MW71xMW71+152x230 2-MW97xMW71+152x230	1-MW71xMW71+152x230 3-MW97xMW71+152x230	1-MW71xMW71+152x230 4-MW97xMW71+152x230 1-MW97xMW71+152x460	1-MW71xMW71+152x230 4-MW97xMW71+152x230 2-MW97xMW71+152x460	1-MW71xMW71+152x230 4-MW97xMW71+152x230 4-MW97xMW71+152x460

Nomenclature:

Number of rows

Transverse MW wire size

1-MW71xMW71+152x230

Longitudinal MW wire size

Spacing of transverse wires

Spacing of longitudinal wires

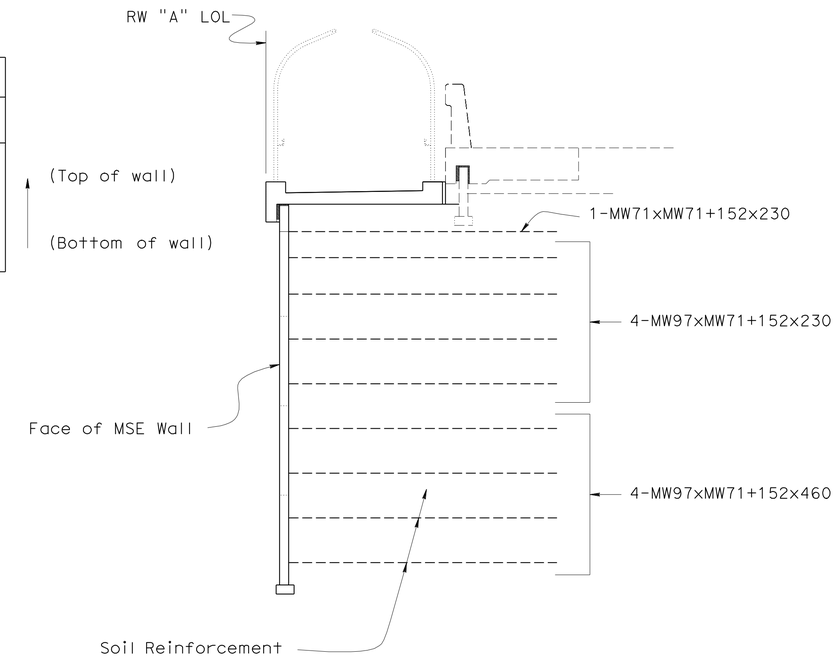

SECTION A-A
(REINFORCEMENT ZONE Ⓔ)
1:50

NOTE:
THE CONTRACTOR SHALL VERIFY ALL CONTROLLING FIELD DIMENSIONS BEFORE ORDERING OR FABRICATING ANY MATERIAL.

1 **REVISED PER ADDENDUM No. 1 DATED JULY 22, 2010**

Caltrans Metric

ALL DIMENSIONS ARE IN MILLIMETERS UNLESS OTHERWISE SHOWN

ORIGINAL SCALE IN MILLIMETERS FOR REDUCED PLANS 0 10 20 30 40 50 60 70 80 90 100

	BY	CHECKED
DESIGN	G. Galo	F. Feng
DETAILS	S. Cholda	F. Feng
QUANTITIES	A. Logus	D. Kubochi

STATE OF CALIFORNIA
DEPARTMENT OF TRANSPORTATION

DIVISION OF ENGINEERING SERVICES
STRUCTURE DESIGN
DESIGN BRANCH 15

CU 07
EA 121841

BRIDGE NO. 53E0127
KILOMETER POST 46.1

SOUTH APPROACH RAMP & RETAINING WALLS
RETAINING WALL "A" LAYOUT 2 OF 2

DISREGARD PRINTS BEARING EARLIER REVISION DATES

REVISION DATES: 12-11-07 01-28-09 07-01-10 09-09-08 10-06-08 10-16-08 11-13-08 11-20-08 12-15-08 01-09-09

SHEET 9 OF 31

FILE => 53e0127-g-rw_lo02.add

STRUCTURES DESIGN DETAIL SHEET (METRIC) (REV.03-17-04)

USERNAME => ttmirkes1 DATE PLOTTED => 21-JUL-2010 TIME PLOTTED => 14:10

DIST	COUNTY	ROUTE	KILOMETER POST TOTAL PROJECT	SHEET No	TOTAL SHEETS
07	LA	5	42.8/47.3	1010	1073

Andrew Rittenhouse 12-05-08
REGISTERED CIVIL ENGINEER DATE

6-8-09
PLANS APPROVAL DATE

REGISTERED PROFESSIONAL ENGINEER
Andrew P. Rittenhouse
No. 61006
Exp. 12-31-10
CIVIL
STATE OF CALIFORNIA

The State of California or its officers or agents shall not be responsible for the accuracy or completeness of electronic copies of this plan sheet.

Caltrans now has a web site! To get to the web site, go to: http://www.dot.ca.gov

1

TABLE

	Reinforcement Zone				
	Ⓐ	Ⓑ	Ⓒ	Ⓓ	
Soil Reinforcement (size and spacing)	3-MW71xMW71+152x230	2-MW71xMW71+152x230 2-MW97xMW71+152x300	3-MW71xMW71+152x230	2-MW71xMW71+152x230	(Top of wall) (Bottom of wall)

Nomenclature:

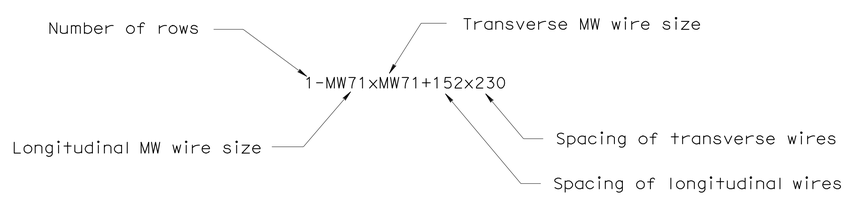

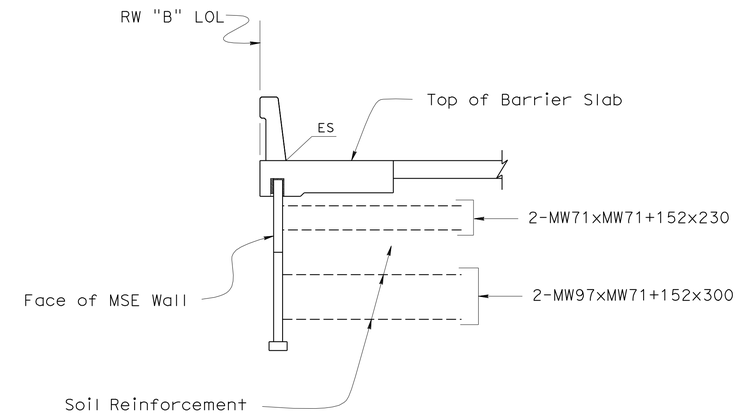

SECTION A-A
(REINFORCEMENT ZONE Ⓑ)
1:50

NOTE:
THE CONTRACTOR SHALL VERIFY ALL CONTROLLING FIELD DIMENSIONS BEFORE ORDERING OR FABRICATING ANY MATERIAL.

1 **REVISED PER ADDENDUM No. 1 DATED JULY 22, 2010**

Caltrans Metric

ALL DIMENSIONS ARE IN MILLIMETERS UNLESS OTHERWISE SHOWN

ORIGINAL SCALE IN MILLIMETERS FOR REDUCED PLANS 0 10 20 30 40 50 60 70 80 90 100

	BY	CHECKED
DESIGN	G. Galo	F. Feng
DETAILS	S. Cholda	F. Feng
QUANTITIES	A. Logus	D. Kubochi

STATE OF CALIFORNIA
DEPARTMENT OF TRANSPORTATION

DIVISION OF ENGINEERING SERVICES
STRUCTURE DESIGN
DESIGN BRANCH 15

CU 07
EA 121841

BRIDGE NO. 53E0127
KILOMETER POST 46.1

SOUTH APPROACH RAMP & RETAINING WALLS
RETAINING WALL "B" LAYOUT 2 OF 2

DISREGARD PRINTS BEARING EARLIER REVISION DATES

REVISION DATES: 12-11-07 01-08-09 01-09-09 01-20-09 07-01-10 10-16-08 11-13-08 11-20-08 12-15-08 12-29-08

SHEET 11 OF 31

FILE => 53e0127-g-rw_lo04.add

STRUCTURES DESIGN DETAIL SHEET (METRIC) (REV.03-17-04)

USERNAME => trmikes1 DATE PLOTTED => 21-JUL-2010 TIME PLOTTED => 14:10

DIST	COUNTY	ROUTE	KILOMETER POST TOTAL PROJECT	SHEET No	TOTAL SHEETS
07	LA	5	42.8/47.3	1042	1073

Andrew Rittenhouse 12-05-08
REGISTERED CIVIL ENGINEER DATE

6-8-09
PLANS APPROVAL DATE

REGISTERED PROFESSIONAL ENGINEER Andrew P. Rittenhouse No. 61006 Exp. 12-31-10 CIVIL STATE OF CALIFORNIA

The State of California or its officers or agents shall not be responsible for the accuracy or completeness of electronic copies of this plan sheet.

1

TABLE

	Reinforcement Zone				
	Ⓐ	Ⓑ	Ⓒ	Ⓓ	Ⓔ
Soil Reinforcement (size and spacing)	2-MW71xMW71+152x230	3-MW71xMW71+152x230	2-MW71xMW71+152x230 2-MW71xMW71+152x300 1-MW71xMW71+152x460	2-MW71xMW71+152x230 2-MW71xMW71+152x300 1-MW71xMW71+152x460 1-MW71xMW71+152x600	2-MW71xMW71+152x230 2-MW71xMW71+152x300 1-MW71xMW71+152x460 2-MW71xMW71+152x600

(Top of wall)

(Bottom of wall)

TABLE (CONT)

	Reinforcement Zone					
	Ⓕ	Ⓖ	Ⓗ	Ⓘ	Ⓙ	Ⓚ
Soil Reinforcement (size and spacing)	2-MW71xMW71+152x230 3-MW71xMW71+152x460 3-MW71xMW71+152x600	5-MW71xMW71+152x460 4-MW71xMW71+152x600	5-MW71xMW71+152x460 5-MW71xMW71+152x600	5-MW71xMW71+152x460 4-MW71xMW71+152x600	5-MW71xMW71+152x460 5-MW71xMW71+152x600	10-MW71xMW71+152x460 2-MW71xMW71+152x600

(Top of wall)

(Bottom of wall)

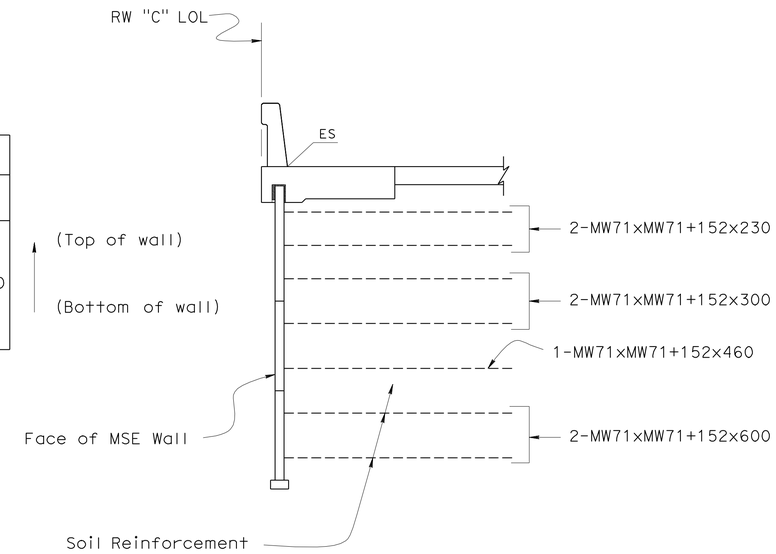

SECTION A-A
(REINFORCEMENT ZONE Ⓔ)
1:50

Nomenclature:

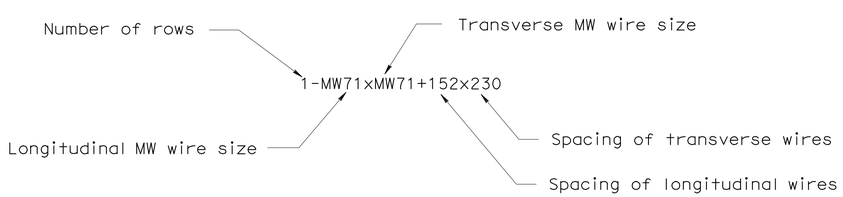

Note:
1. Numbers of rows in particular Reinforcement Zone varies. Use mat wire rows accordingly to size and number of panels in column.

NOTE:
THE CONTRACTOR SHALL VERIFY ALL CONTROLLING FIELD DIMENSIONS BEFORE ORDERING OR FABRICATING ANY MATERIAL.

1 REVISED PER ADDENDUM No. 1 DATED JULY 22, 2010

Caltrans Metric

	BY	CHECKED
DESIGN	G. Galo	F. Feng
DETAILS	S. Cholda	F. Feng
QUANTITIES	A. Logus	D. Kubochi

STATE OF CALIFORNIA
DEPARTMENT OF TRANSPORTATION

DIVISION OF ENGINEERING SERVICES
STRUCTURE DESIGN
DESIGN BRANCH 15

BRIDGE NO. 53E0128
KP (PM) 46.3

NORTH APPROACH RAMP & RETAINING WALLS
RETAINING WALL "C" LAYOUT 3 OF 3

ALL DIMENSIONS ARE IN MILLIMETERS UNLESS OTHERWISE SHOWN

ORIGINAL SCALE IN MILLIMETERS FOR REDUCED PLANS 0 10 20 30 40 50 60 70 80 90 100

CU 07
EA 121841

DISREGARD PRINTS BEARING EARLIER REVISION DATES

REVISION DATES: 12-11-07 01-28-09 07-01-10 09-09-08 10-06-08 10-10-08 11-20-08 12-11-08 12-24-08 01-12-09

SHEET 12 OF 41

FILE => 53e0128-g-rw_1o03.add

STRUCTURES DESIGN DETAIL SHEET (METRIC) (REV.03-17-04)

USERNAME => trmikest DATE PLOTTED => 21-JUL-2010 TIME PLOTTED => 14:11

DIST	COUNTY	ROUTE	KILOMETER POST TOTAL PROJECT	SHEET No	TOTAL SHEETS
07	LA	5	42.8/47.3	1044	1073

Andrew Rittenhouse 12-05-08
REGISTERED CIVIL ENGINEER DATE

6-8-09
PLANS APPROVAL DATE

REGISTERED PROFESSIONAL ENGINEER
Andrew P. Rittenhouse
No. 61006
Exp. 12-31-10
CIVIL
STATE OF CALIFORNIA

The State of California or its officers or agents shall not be responsible for the accuracy or completeness of electronic copies of this plan sheet.

1

TABLE

	Reinforcement Zone			
	Ⓐ	Ⓑ	Ⓒ	Ⓓ
Soil Reinforcement (size and spacing)	2-MW71xMW71+152x230 4-MW97xMW71+152x230 4-MW97xMW71+152x460	1-MW71xMW71+152x230 4-MW97xMW71+152x230 3-MW97xMW71+152x460	1-MW71xMW71+152x230 4-MW97xMW71+152x230 2-MW97xMW71+152x460	2-MW71xMW71+152x230 2-MW97xMW71+152x230

(Top of wall)

(Bottom of wall)

Nomenclature:

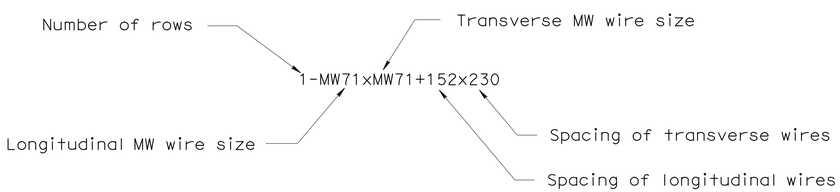

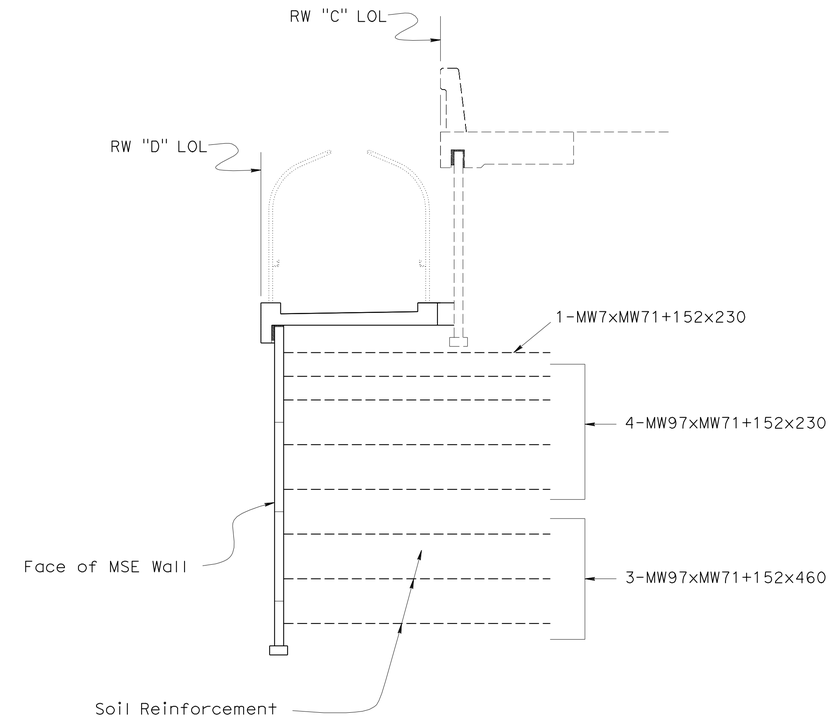

SECTION A-A
(REINFORCEMENT ZONE Ⓑ)
1:50

Note:
1. Numbers of rows in particular Reinforcement Zone varies. Use mat wires accordingly to size and number of panels in column.

NOTE:
THE CONTRACTOR SHALL VERIFY ALL CONTROLLING FIELD DIMENSIONS BEFORE ORDERING OR FABRICATING ANY MATERIAL.

1 REVISED PER ADDENDUM No. 1 DATED JULY 22, 2010

Caltrans Metric

	BY	CHECKED
DESIGN	G. Galo	F. Feng
DETAILS	S. Cholda	F. Feng
QUANTITIES	A. Logus	D. Kubochi

STATE OF CALIFORNIA
DEPARTMENT OF TRANSPORTATION

DIVISION OF ENGINEERING SERVICES
STRUCTURE DESIGN
DESIGN BRANCH 15

BRIDGE NO. 53E0128
KP (PM) 46.3

NORTH APPROACH RAMP & RETAINING WALLS
RETAINING WALL "D" LAYOUT 2 OF 2

ALL DIMENSIONS ARE IN MILLIMETERS UNLESS OTHERWISE SHOWN

ORIGINAL SCALE IN MILLIMETERS FOR REDUCED PLANS 0 10 20 30 40 50 60 70 80 90 100

CU 07
EA 121841

DISREGARD PRINTS BEARING EARLIER REVISION DATES

REVISION DATES: 12-11-07 07-01-10 07-08-08 09-09-08 10-06-08 10-10-08 11-20-08 12-11-08 01-12-09 01-28-09

SHEET 14 OF 41

FILE => 53e0128-g-rw_lo05.add

STRUCTURES DESIGN DETAIL SHEET (METRIC) (REV.03-17-04)

USERNAME => trmikesl DATE PLOTTED => 21-JUL-2010 TIME PLOTTED => 14:11

DIST	COUNTY	ROUTE	KILOMETER POST TOTAL PROJECT	SHEET No	TOTAL SHEETS
07	LA	5	42.8/47.3	1046	1073

Andrew Rittenhouse 12-05-08
REGISTERED CIVIL ENGINEER DATE

6-8-09
PLANS APPROVAL DATE

REGISTERED PROFESSIONAL ENGINEER Andrew P. Rittenhouse No. 61006 Exp. 12-31-10 CIVIL STATE OF CALIFORNIA

The State of California or its officers or agents shall not be responsible for the accuracy or completeness of electronic copies of this plan sheet.

1

TABLE

	Reinforcement Zone				
	Ⓐ	Ⓑ	Ⓒ	Ⓓ	Ⓔ
Soil Reinforcement (size and spacing)	1-MW71xMW71+152x230 1-MW97xMW71+152x230	1-MW71xMW71+152x230 4-MW97xMW71+152x230	1-MW71xMW71+152x230 4-MW97xMW71+152x230 1-MW97xMW71+152x460	1-MW71xMW71+152x230 4-MW97xMW71+152x230 2-MW97xMW71+152x460	4-MW97+MW71x230 1-MW97+MW71x460

Nomenclature:

Number of rows — Transverse MW wire size

1-MW71xMW71+152x230

Longitudinal MW wire size — Spacing of transverse wires — Spacing of longitudinal wires

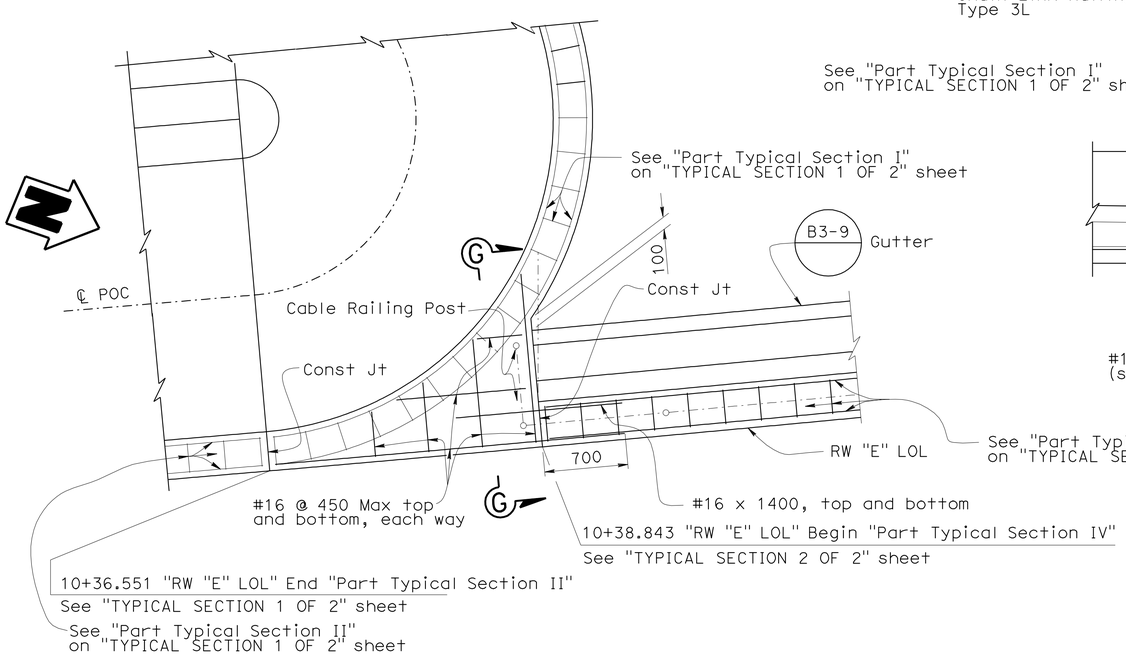

DETAIL "A"
1:25

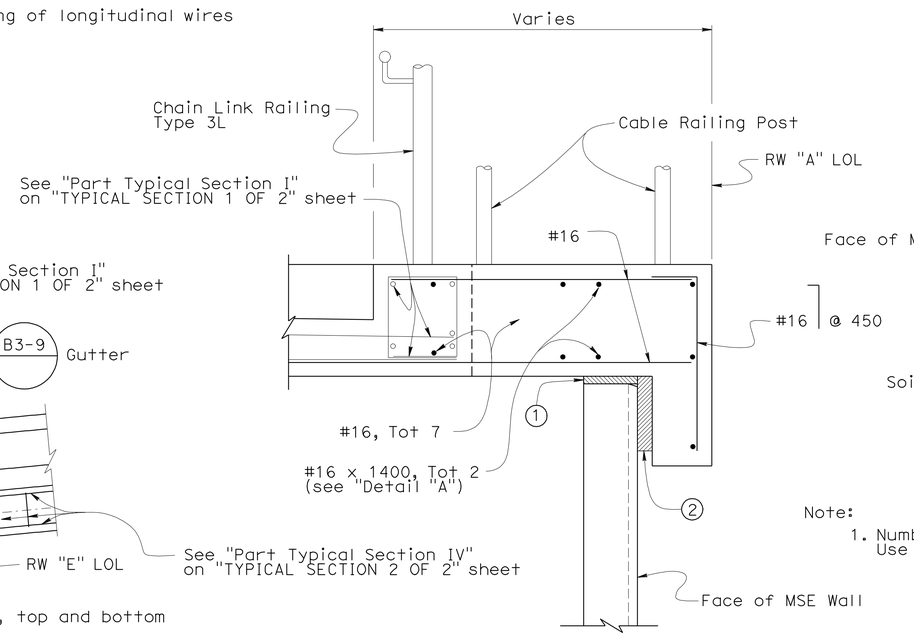

Legend:

1. 25 mm Expanded Polystyrene
2. 50 mm Expanded Polystyrene. Recess Expanded Polystyrene 50 mm into Sidewalk Curb

SECTION G-G
1:10

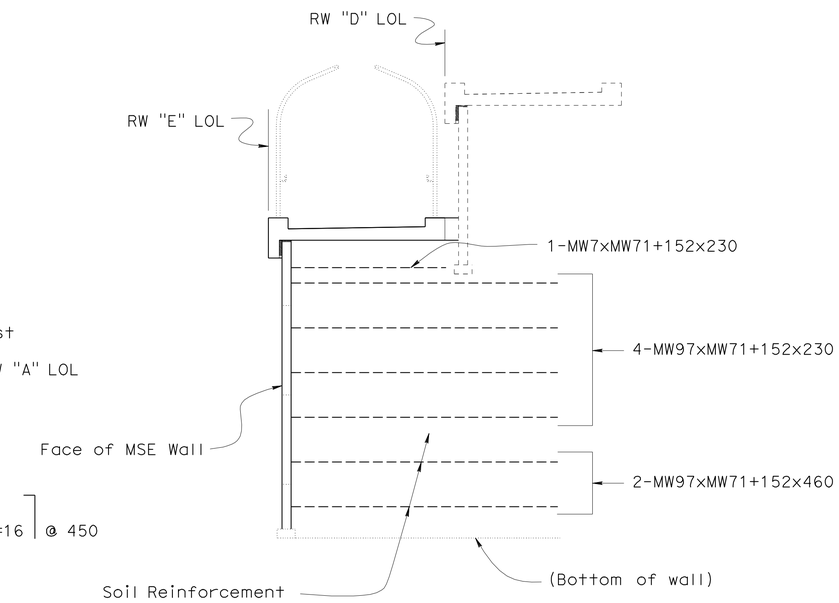

SECTION A-A
(REINFORCEMENT ZONE "D")
1:50

Note:
1. Numbers of rows in particular Reinforcement Zone varies. Use mat wire rows accordingly to size and number of panels in column.

NOTE:
THE CONTRACTOR SHALL VERIFY ALL CONTROLLING FIELD DIMENSIONS BEFORE ORDERING OR FABRICATING ANY MATERIAL.

1 **REVISED PER ADDENDUM No. 1 DATED JULY 22, 2010**

Caltrans Metric

	BY	CHECKED
DESIGN	G. Galo	F. Feng
DETAILS	S. Cholda	F. Feng
QUANTITIES	A. Logus	D. Kubochi

STATE OF CALIFORNIA
DEPARTMENT OF TRANSPORTATION

DIVISION OF ENGINEERING SERVICES
STRUCTURE DESIGN
DESIGN BRANCH 15

BRIDGE NO. 53E0128
KILOMETER POST 46.3

NORTH APPROACH RAMP & RETAINING WALLS
RETAINING WALL "E" LAYOUT 2 OF 2

ALL DIMENSIONS ARE IN MILLIMETERS UNLESS OTHERWISE SHOWN

ORIGINAL SCALE IN MILLIMETERS FOR REDUCED PLANS 0 10 20 30 40 50 60 70 80 90 100

CU 07
EA 121841

DISREGARD PRINTS BEARING EARLIER REVISION DATES

REVISION DATES: 12-11-07 01-16-09 01-28-09 07-01-10 10-06-08 10-16-08 11-20-08 12-11-08 12-23-08 01-13-09

SHEET 16 OF 41

FILE => 53e0128-g-rw_1o07.add

STRUCTURES DESIGN DETAIL SHEET (METRIC) (REV.03-17-04)

USERNAME => trmikest DATE PLOTTED => 21-JUL-2010 TIME PLOTTED => 14:11