Dist	COUNTY	ROUTE	POST MILES TOTAL PROJECT	SHEET No.	TOTAL SHEETS
07	LA	5	C45.4/C46.1	2	61

REGISTERED CIVIL ENGINEER 10-23-07 DATE

10-24-07
PLANS APPROVAL DATE

REGISTERED PROFESSIONAL ENGINEER C. BIGLARIAN No. 36153 Exp 6-30-08 CIVIL STATE OF CALIFORNIA

THE STATE OF CALIFORNIA OR ITS OFFICERS OR AGENTS SHALL NOT BE RESPONSIBLE FOR THE ACCURACY OR COMPLETENESS OF ELECTRONIC COPIES OF THIS PLAN SHEET.

NOTES:

1. DIMENSIONS OF THE STRUCTURAL SECTIONS ARE SUBJECT TO TOLERANCES SPECIFIED IN THE STANDARD SPECIFICATIONS.
2. SUPERELEVATION AS SHOWN OR AS DIRECTED BY THE ENGINEER.

TYPICAL STRUCTURAL SECTION

1 — OG
- 1.10′ CONCRETE PAVEMENT (RAPID STRENGTH Conc)
- 0.05′ BOND BREAKER
- 0.50′ LEAN CONCRETE BASE (RAPID SETTING)
- 0.70′ Cl3 AGGREGATE BASE

2 — OG
- 0.65′ CONCRETE PAVEMENT (RAPID STRENGTH Conc)
- 0.05′ BOND BREAKER
- 0.45′ LEAN CONCRETE BASE (RAPID SETTING)
- 0.60′ Cl3 AGGREGATE BASE

3 — OG
- 0.25′ ASPHALT CONCRETE (TYPE B)
- 0.65′ Cl2 AGGREGATE BASE
- 0.80′ Cl4 AGGREGATE SUBBASE

EXISTING STRUCTURAL SECTION

A
- 0.80′ PORTLAND CEMENT CONCRETE
- 0.40′ CEMENT TREATED BASE
- 0.50′ AGGREGATE BASE

B
- 0.40′ ASPHALT CONCRETE
- 0.65′ AGGREGATE BASE
- 0.75′ AGGREGATE SUBBASE

C
- 0.35′ ASPHALT CONCRETE
- 0.70′ CEMENT TREATED BASE
- 0.25′ AGGREGATE BASE
- 0.85′ AGGREGATE SUBBASE

D
- 0.65′ PORTLAND CEMENT CONCRETE
- 0.45′ CEMENT TREATED BASE
- 0.60′ AGGREGATE BASE

E
- 0.25′ ASPHALT CONCRETE
- 0.65′ AGGREGATE BASE
- 0.80′ AGGREGATE SUBBASE

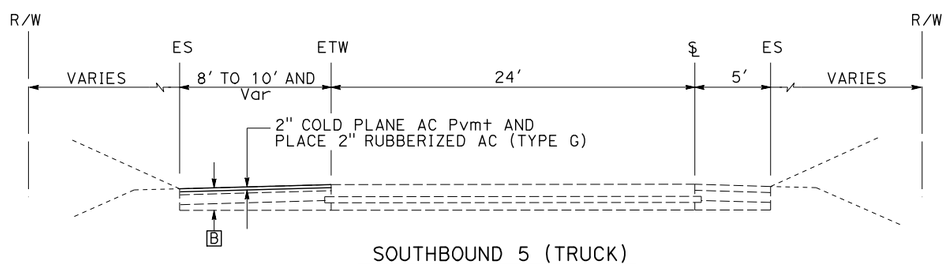

SOUTHBOUND 5 (TRUCK)
STA 27+40 TO 32+20

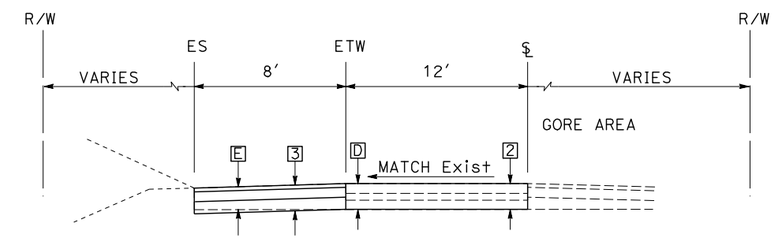

SB 5 TO NB 14 Conn (RAMP L)
STA 83+80 TO 84+95

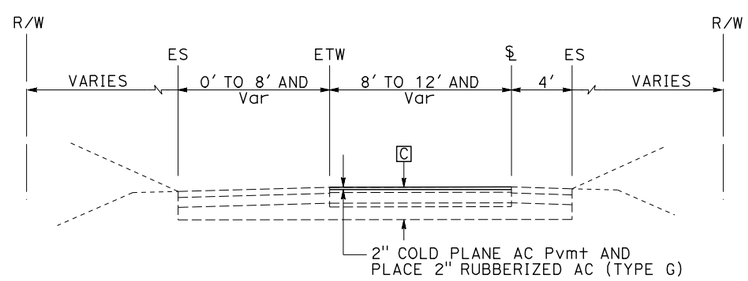

SOUTHBOUND OFF-RAMP TO SIERRA Hwy (RAMP P)
STA 23+25 TO 27+40

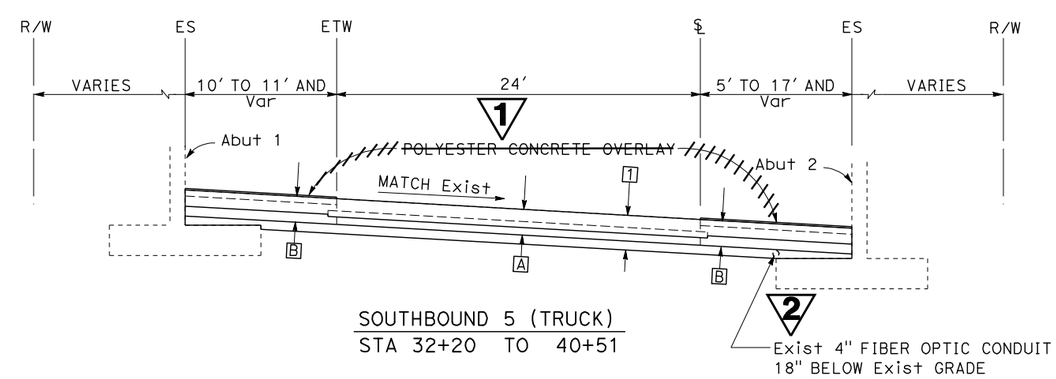

SOUTHBOUND 5 (TRUCK)
STA 32+20 TO 40+51

1 REVISED PER ADDENDUM No. 1 DATED OCTOBER 26, 2007

2 REVISED PER ADDENDUM No. 2 DATED OCTOBER 27, 2007

TYPICAL CROSS SECTIONS

NO SCALE

X-1

STATE OF CALIFORNIA - DEPARTMENT OF TRANSPORTATION
Caltrans OFFICE OF DESIGN A

FUNCTIONAL SUPERVISOR: CRICORIS BIGLARIAN
CALCULATED-DESIGNED BY
CHECKED BY
REVISED BY
DATE REVISED

LAST REVISION 00-00-00
DATE PLOTTED => 27-OCT-2007
TIME PLOTTED => 15:55