Dist	COUNTY	ROUTE	KILOMETER POST TOTAL PROJECT	SHEET No.	TOTAL SHEETS
07	LA	5	2.9/4.9	20	1082

Ngim N. Pe 12-23-09
REGISTERED CIVIL ENGINEER DATE

6-21-10
PLANS APPROVAL DATE

REGISTERED PROFESSIONAL ENGINEER NGIM NANCY PE No. 58161 Exp. 6-30-10 CIVIL STATE OF CALIFORNIA

THE STATE OF CALIFORNIA OR ITS OFFICERS OR AGENTS SHALL NOT BE RESPONSIBLE FOR THE ACCURACY OR COMPLETENESS OF ELECTRONIC COPIES OF THIS PLAN SHEET.

Caltrans Metric

1

NOTES:

1. FOR ACCURATE RIGHT OF WAY AND ACCESS DATA, CONTACT RIGHT OF WAY ENGINEERING AT THE DISTRICT OFFICE.
2. CURVES No. 50, 51, 52, 53 ARE NON-CONCENTRATED TO STATION LINE.
3. REFER TO RI-1 AND RI-2 SHEETS FOR PARCEL MAP INFORMATION.

LEGEND:

- # TYPICAL STRUCTURAL SECTION (SEE TYPICAL CROSS SECTIONS)
- MINOR CONCRETE (TEXTURED PAVING)
- ROCK BLANKET
- MINOR CONCRETE (RAPID STRENGTH CONCRETE)

ABBREVIATIONS:

TCGE: TEMPORARY CONSTRUCTION AND GRADING EASEMENT

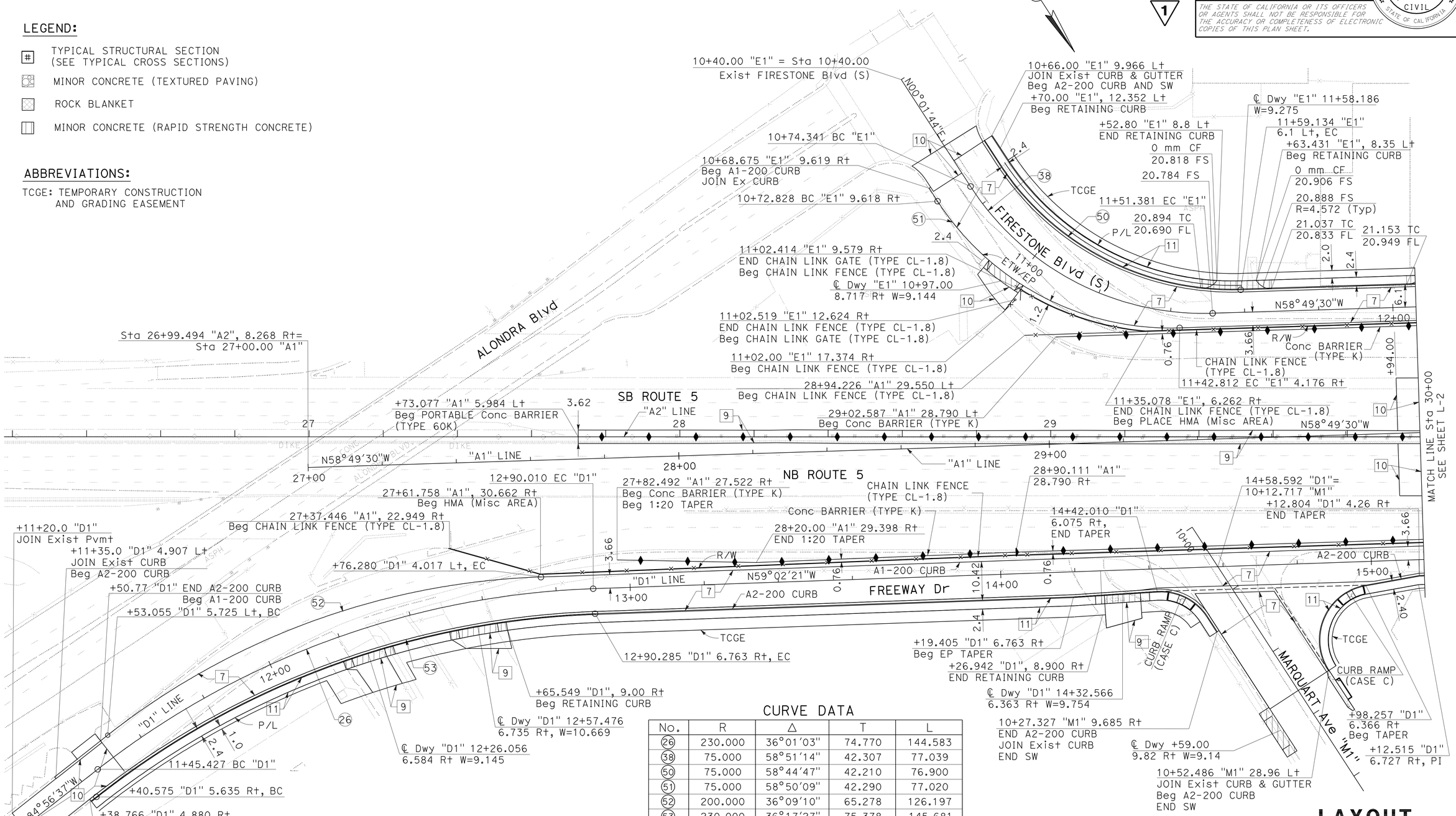

CURVE DATA

No.	R	Δ	T	L
26	230.000	36°01'03"	74.770	144.583
38	75.000	58°51'14"	42.307	77.039
50	75.000	58°44'47"	42.210	76.900
51	75.000	58°50'09"	42.290	77.020
52	200.000	36°09'10"	65.278	126.197
53	230.000	36°17'27"	75.378	145.681

1 **REVISED PER ADDENDUM No. 1 DATED APRIL 21, 2011**

ALL DIMENSIONS ARE IN METERS UNLESS OTHERWISE SHOWN

LAYOUT

SCALE 1:500

L-1

KEVIN Q. NGUYEN	KN	CALCULATED-DESIGNED BY	
NGIM NANCY PE	9/09	CHECKED BY	
REVISED BY		FUNCTIONAL SUPERVISOR	
DATE REVISED		NGIM NANCY PE	

STATE OF CALIFORNIA - DEPARTMENT OF TRANSPORTATION
Caltrans OFFICE OF DESIGN A

72159cea001.add

LAST REVISION 00-00-00 DATE PLOTTED => 20-APR-2011 TIME PLOTTED => 12:41

Dist	COUNTY	ROUTE	KILOMETER POST TOTAL PROJECT	SHEET No.	TOTAL SHEETS
07	LA	5	2.9/4.9	21	1082

REGISTERED CIVIL ENGINEER 12-23-09 DATE

6-21-10
PLANS APPROVAL DATE

REGISTERED PROFESSIONAL ENGINEER NGIM NANCY PE No. 58161 Exp. 6-30-10 CIVIL STATE OF CALIFORNIA

THE STATE OF CALIFORNIA OR ITS OFFICERS OR AGENTS SHALL NOT BE RESPONSIBLE FOR THE ACCURACY OR COMPLETENESS OF ELECTRONIC COPIES OF THIS PLAN SHEET.

Caltrans Metric

1. FOR ACCURATE RIGHT OF WAY AND ACCESS DATA, CONTACT RIGHT OF WAY ENGINEERING AT THE DISTRICT OFFICE.

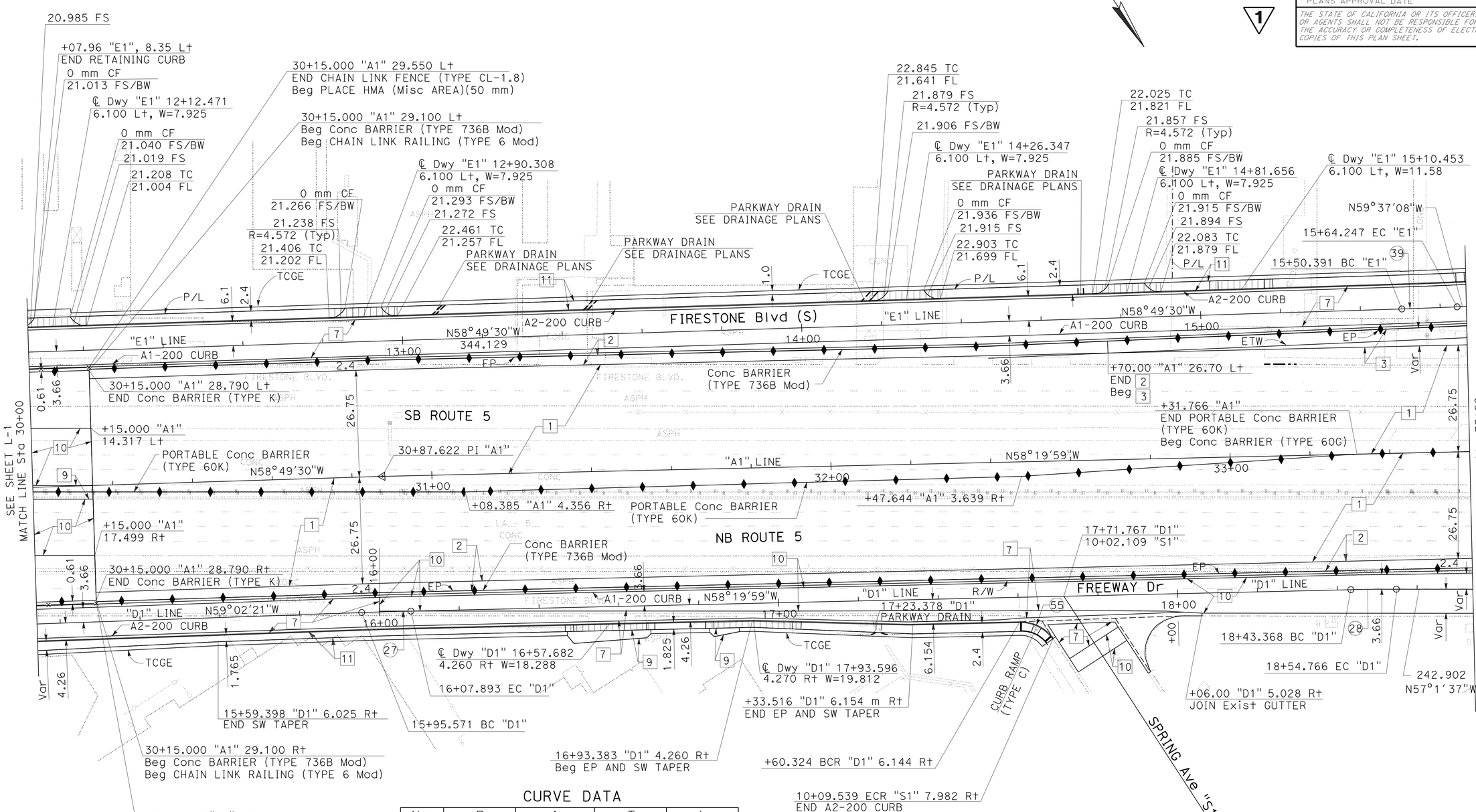

CURVE DATA

No.	R	Δ	T	L
27	1000.000	00°42'22"	6.161	12.322
28	500.000	1°18'22"	5.699	11.398
39	1000.000	00°47'38"	6.928	13.856
55	10.000	55°40'51"	5.281	9.718

ALL DIMENSIONS ARE IN METERS UNLESS OTHERWISE SHOWN

LAYOUT
SCALE 1:500

L-2

1 REVISED PER ADDENDUM No. 1 DATED APRIL 21, 2011

KEVIN Q. NGUYEN	KN	9/09	
NGIM NANCY PE			
CALCULATED-DESIGNED BY	REVISED BY	DATE REVISED	
CHECKED BY			
FUNCTIONAL SUPERVISOR			
NGIM NANCY PE			

STATE OF CALIFORNIA - DEPARTMENT OF TRANSPORTATION
Caltrans OFFICE OF DESIGN A

72159cea002.add

LAST REVISION 00-00-00 | DATE PLOTTED => 20-APR-2011 | TIME PLOTTED => 12:32

BORDER LAST REVISED 3/1/2007 | RELATIVE BORDER SCALE IS IN MILLIMETERS 0 20 40 60 80 | USERNAME => trlenard | DGN FILE => 72159cea002.add | CU 07225 | EA 2159C1

Dist	COUNTY	ROUTE	KILOMETER POST TOTAL PROJECT	SHEET No.	TOTAL SHEETS
07	LA	5	2.9/4.9	26	1082

Ngim N. Pe 12-23-09
REGISTERED CIVIL ENGINEER DATE

6-21-10
PLANS APPROVAL DATE

REGISTERED PROFESSIONAL ENGINEER NGIM NANCY PE No. 58161 Exp. 6-30-10 CIVIL STATE OF CALIFORNIA

THE STATE OF CALIFORNIA OR ITS OFFICERS OR AGENTS SHALL NOT BE RESPONSIBLE FOR THE ACCURACY OR COMPLETENESS OF ELECTRONIC COPIES OF THIS PLAN SHEET.

Caltrans Metric

1

NOTES:

1. FOR ACCURATE RIGHT OF WAY AND ACCESS DATA, CONTACT RIGHT OF WAY ENGINEERING AT THE DISTRICT OFFICE.
2. FOR FIRESTONE Blvd (N) "D3" LINE CONSTRUCTION, SEE CONSTRUCTION DETAILS.

CURVE DATA

No.	R	Δ	T	L
35	80.00	34°39'7"	24.957	48.383
36	80.00	34°57'48"	25.196	48.818

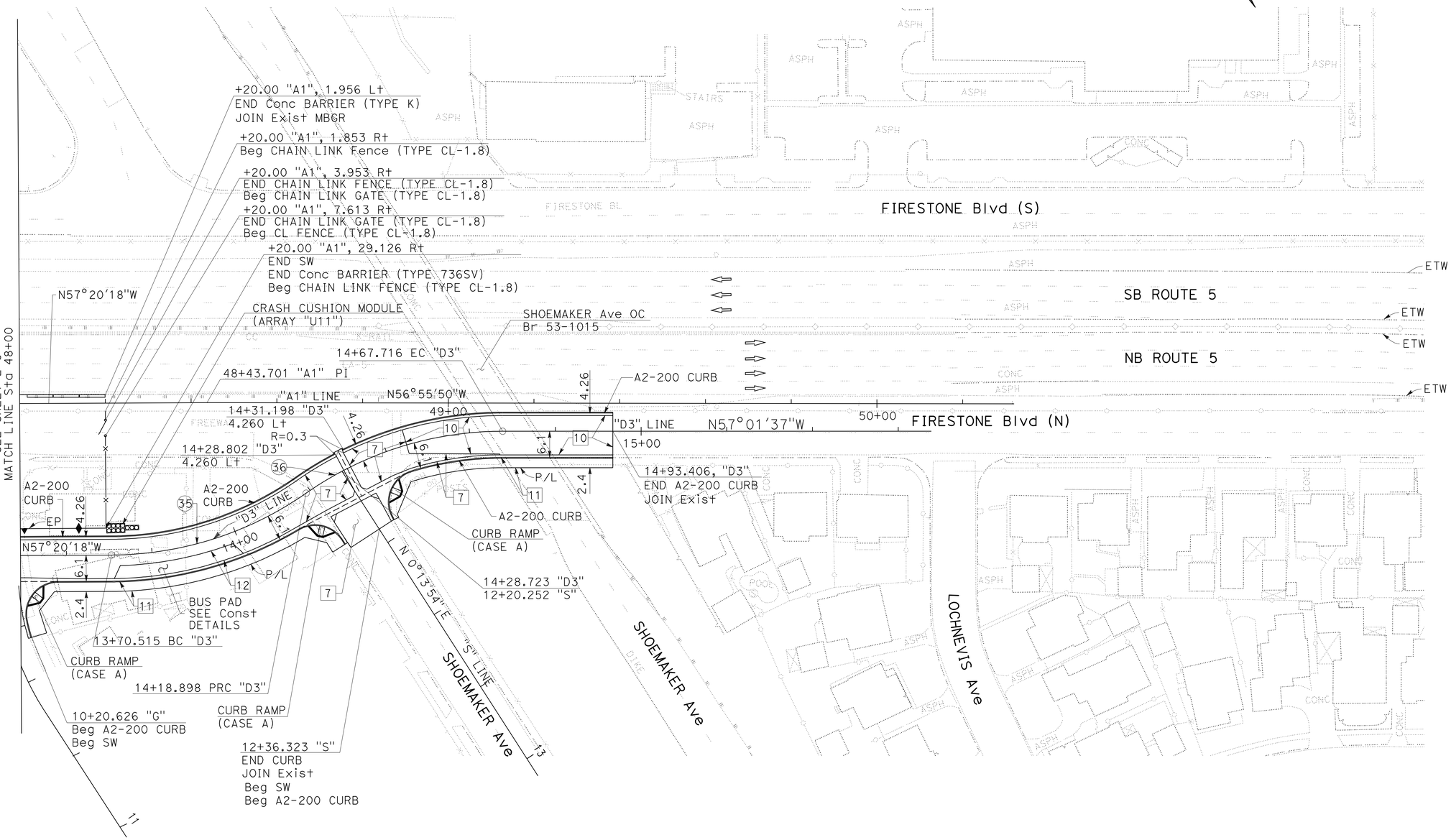

ALL DIMENSIONS ARE IN METERS
UNLESS OTHERWISE SHOWN

LAYOUT
SCALE 1:500

L-7

1 **REVISED PER ADDENDUM No. 1 DATED APRIL 21, 2011**

KN	9/09	REVISED BY / DATE REVISED
KEVIN Q. NGUYEN	NGIM NANCY PE	CALCULATED-DESIGNED BY / CHECKED BY
NGIM NANCY PE		FUNCTIONAL SUPERVISOR

STATE OF CALIFORNIA - DEPARTMENT OF TRANSPORTATION
Caltrans OFFICE OF DESIGN A

72159cea007.add

LAST REVISION 00-00-00 | DATE PLOTTED => 20-APR-2011 | TIME PLOTTED => 12:32

Dist	COUNTY	ROUTE	KILOMETER POST TOTAL PROJECT	SHEET No.	TOTAL SHEETS
07	LA	5	2.9/4.9	27	1082

REGISTERED CIVIL ENGINEER 12-23-09 DATE

6-21-10
PLANS APPROVAL DATE

REGISTERED PROFESSIONAL ENGINEER NGIM NANCY PE No. 58161 Exp. 6-30-10 CIVIL STATE OF CALIFORNIA

THE STATE OF CALIFORNIA OR ITS OFFICERS OR AGENTS SHALL NOT BE RESPONSIBLE FOR THE ACCURACY OR COMPLETENESS OF ELECTRONIC COPIES OF THIS PLAN SHEET.

Caltrans Metric

1

NOTES:

1. FOR ACCURATE RIGHT OF WAY AND ACCESS DATA, CONTACT RIGHT OF WAY ENGINEERING AT THE DISTRICT OFFICE.
2. FOR STRUCTURE, SEE STRUCTURE PLANS.

CURVE DATA

No.	R	Δ	T	L
4	333.00	11°44′1"	34.217	68.195
8	200.00	6°0′26"	10.494	20.970
9	200.00	6°0′26"	10.494	20.970
80	286.303	6°1′15"	15.056	30.085
81	302.40	10°38′22"	28.158	56.154
82	780.00	4°45′30"	32.407	64.777
83	0.90	174°0′0"	17.173	2.733

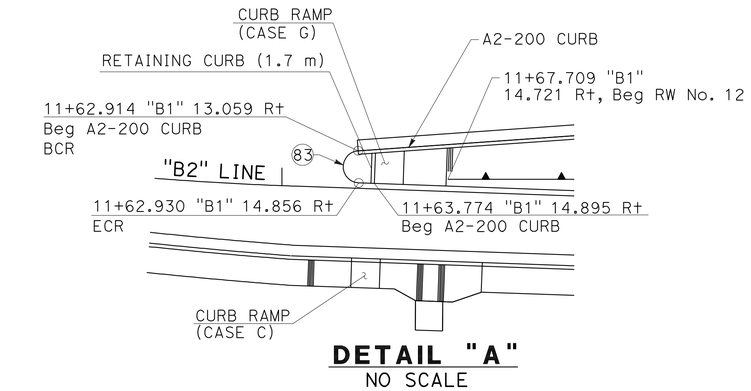

DETAIL "A"
NO SCALE

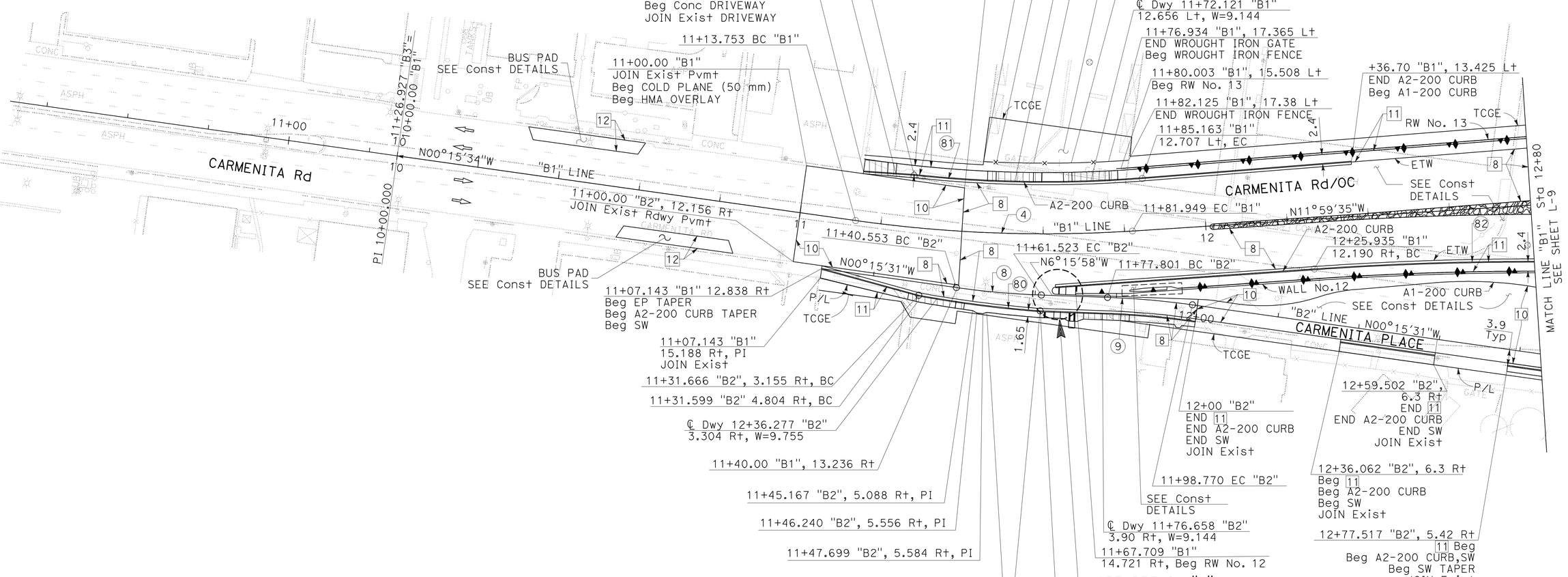

CARMENITA Rd/LOCAL STREETS
LAYOUT
SCALE 1:500

L-8

1 **REVISED PER ADDENDUM No. 1 DATED APRIL 21, 2011**

ALL DIMENSIONS ARE IN METERS UNLESS OTHERWISE SHOWN

KEVIN Q. NGUYEN	KN	9/09
NGIM NANCY PE		

CALCULATED-DESIGNED BY / CHECKED BY / REVISED BY / DATE REVISED

FUNCTIONAL SUPERVISOR: NGIM NANCY PE

STATE OF CALIFORNIA - DEPARTMENT OF TRANSPORTATION
Caltrans OFFICE OF DESIGN A

72159cea008.add

LAST REVISION 00-00-00 | DATE PLOTTED => 20-APR-2011 | TIME PLOTTED => 12:33

Dist	COUNTY	ROUTE	KILOMETER POST TOTAL PROJECT	SHEET No.	TOTAL SHEETS
07	LA	5	2.9/4.9	28	1082

Ngim N Pe 12-23-09
REGISTERED CIVIL ENGINEER DATE

6-21-10
PLANS APPROVAL DATE

REGISTERED PROFESSIONAL ENGINEER NGIM NANCY PE No. 58161 Exp. 6-30-10 CIVIL STATE OF CALIFORNIA

THE STATE OF CALIFORNIA OR ITS OFFICERS OR AGENTS SHALL NOT BE RESPONSIBLE FOR THE ACCURACY OR COMPLETENESS OF ELECTRONIC COPIES OF THIS PLAN SHEET.

Caltrans Metric

1

NOTE:

FOR ACCURATE RIGHT OF WAY AND ACCESS DATA, CONTACT RIGHT OF WAY ENGINEERING AT THE DISTRICT OFFICE.

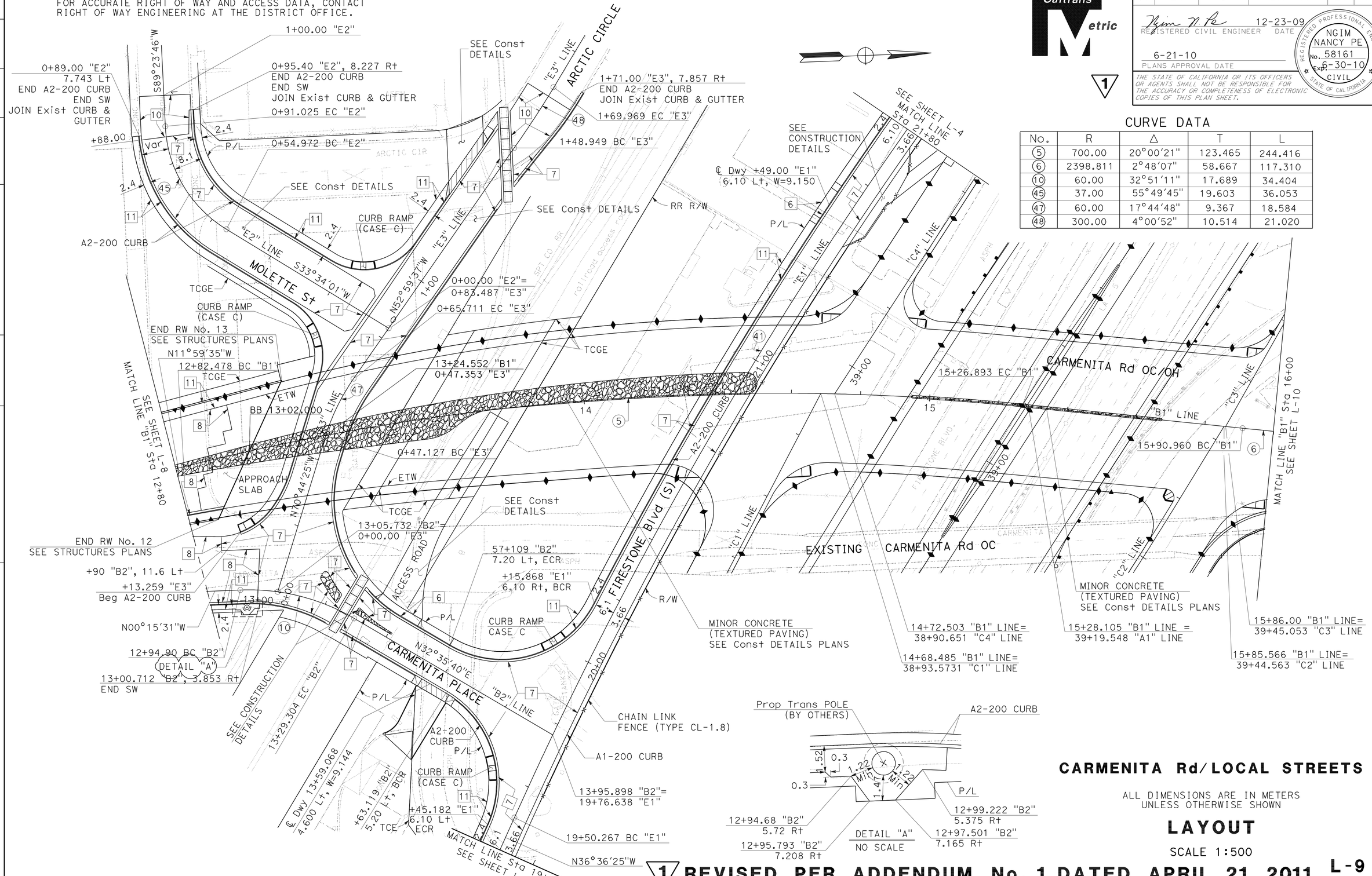

CURVE DATA

No.	R	Δ	T	L
5	700.00	20°00'21"	123.465	244.416
6	2398.811	2°48'07"	58.667	117.310
10	60.00	32°51'11"	17.689	34.404
45	37.00	55°49'45"	19.603	36.053
47	60.00	17°44'48"	9.367	18.584
48	300.00	4°00'52"	10.514	21.020

CARMENITA Rd/LOCAL STREETS

ALL DIMENSIONS ARE IN METERS UNLESS OTHERWISE SHOWN

LAYOUT

SCALE 1:500

1 **REVISED PER ADDENDUM No. 1 DATED APRIL 21, 2011**

L-9

REVISED BY	DATE REVISED
KN	9/09

CALCULATED-DESIGNED BY: KEVIN Q. NGUYEN
CHECKED BY: NGIM NANCY PE
FUNCTIONAL SUPERVISOR: NGIM NANCY PE

STATE OF CALIFORNIA - DEPARTMENT OF TRANSPORTATION
Caltrans OFFICE OF DESIGN A

72159cea009.add

LAST REVISION 00-00-00
DATE PLOTTED => 20-APR-2011
TIME PLOTTED => 12:33

Dist	COUNTY	ROUTE	KILOMETER POST TOTAL PROJECT	SHEET No.	TOTAL SHEETS
07	LA	5	2.9/4.9	29	1082

Ngim N. Pe 12-23-09
REGISTERED CIVIL ENGINEER DATE

6-21-10
PLANS APPROVAL DATE

REGISTERED PROFESSIONAL ENGINEER NGIM NANCY PE No. 58161 Exp. 6-30-10 CIVIL STATE OF CALIFORNIA

THE STATE OF CALIFORNIA OR ITS OFFICERS OR AGENTS SHALL NOT BE RESPONSIBLE FOR THE ACCURACY OR COMPLETENESS OF ELECTRONIC COPIES OF THIS PLAN SHEET.

Caltrans Metric

1

NOTE:
FOR ACCURATE RIGHT OF WAY AND ACCESS DATA, CONTACT RIGHT OF WAY ENGINEERING AT THE DISTRICT OFFICE.

CURVE DATA

No.	R	Δ	T	L
6	2398.811	2°48'07"	58.667	117.310
7	1000.00	5°27'57"	47.735	95.397
20	6000.00	1°11'42"	62.575	125.146
32	350.00	9°24'11"	28.784	57.439

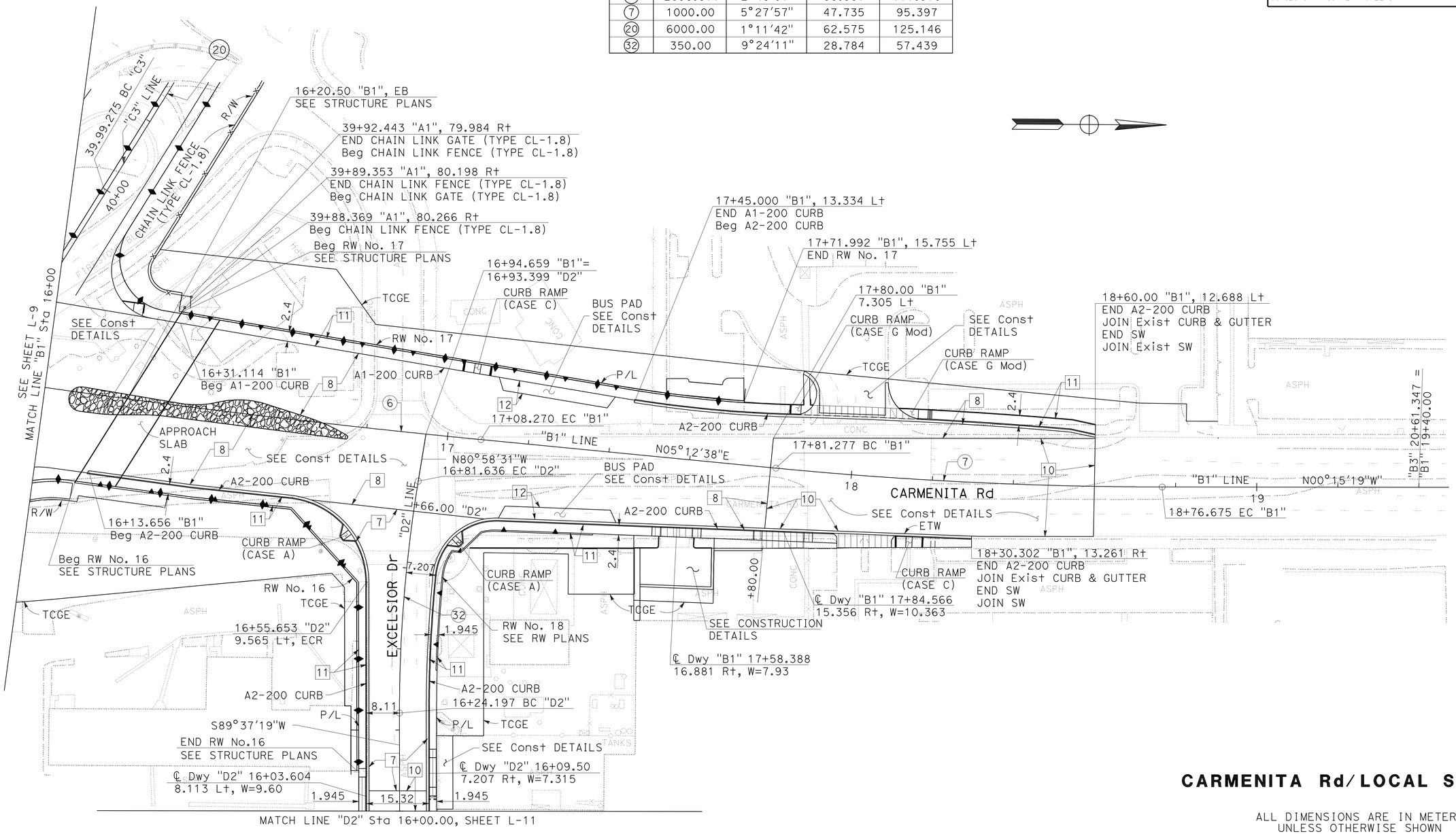

CARMENITA Rd/LOCAL STREETS

ALL DIMENSIONS ARE IN METERS
UNLESS OTHERWISE SHOWN

LAYOUT

SCALE 1:500

L-10

1 **REVISED PER ADDENDUM No. 1 DATED APRIL 21, 2011**

KEVIN Q. NGUYEN	KN
NGIM NANCY PE	9/09
CALCULATED-DESIGNED BY	REVISED BY
CHECKED BY	DATE REVISED
FUNCTIONAL SUPERVISOR	
NGIM NANCY PE	

STATE OF CALIFORNIA - DEPARTMENT OF TRANSPORTATION
Caltrans OFFICE OF DESIGN A

72159cea010.add

LAST REVISION 00-00-00 | DATE PLOTTED => 20-APR-2011 | TIME PLOTTED => 12:33

Dist	COUNTY	ROUTE	KILOMETER POST TOTAL PROJECT	SHEET No.	TOTAL SHEETS
07	LA	5	2.9/4.9	30	1082

Ngim N. Pe 12-23-09
REGISTERED CIVIL ENGINEER DATE

6-21-10
PLANS APPROVAL DATE

REGISTERED PROFESSIONAL ENGINEER NGIM NANCY PE No. 58161 Exp. 6-30-10 CIVIL STATE OF CALIFORNIA

THE STATE OF CALIFORNIA OR ITS OFFICERS OR AGENTS SHALL NOT BE RESPONSIBLE FOR THE ACCURACY OR COMPLETENESS OF ELECTRONIC COPIES OF THIS PLAN SHEET.

Caltrans Metric

1

NOTE:

1. FOR ACCURATE RIGHT OF WAY AND ACCESS DATA, CONTACT RIGHT OF WAY ENGINEERING AT THE DISTRICT OFFICE.

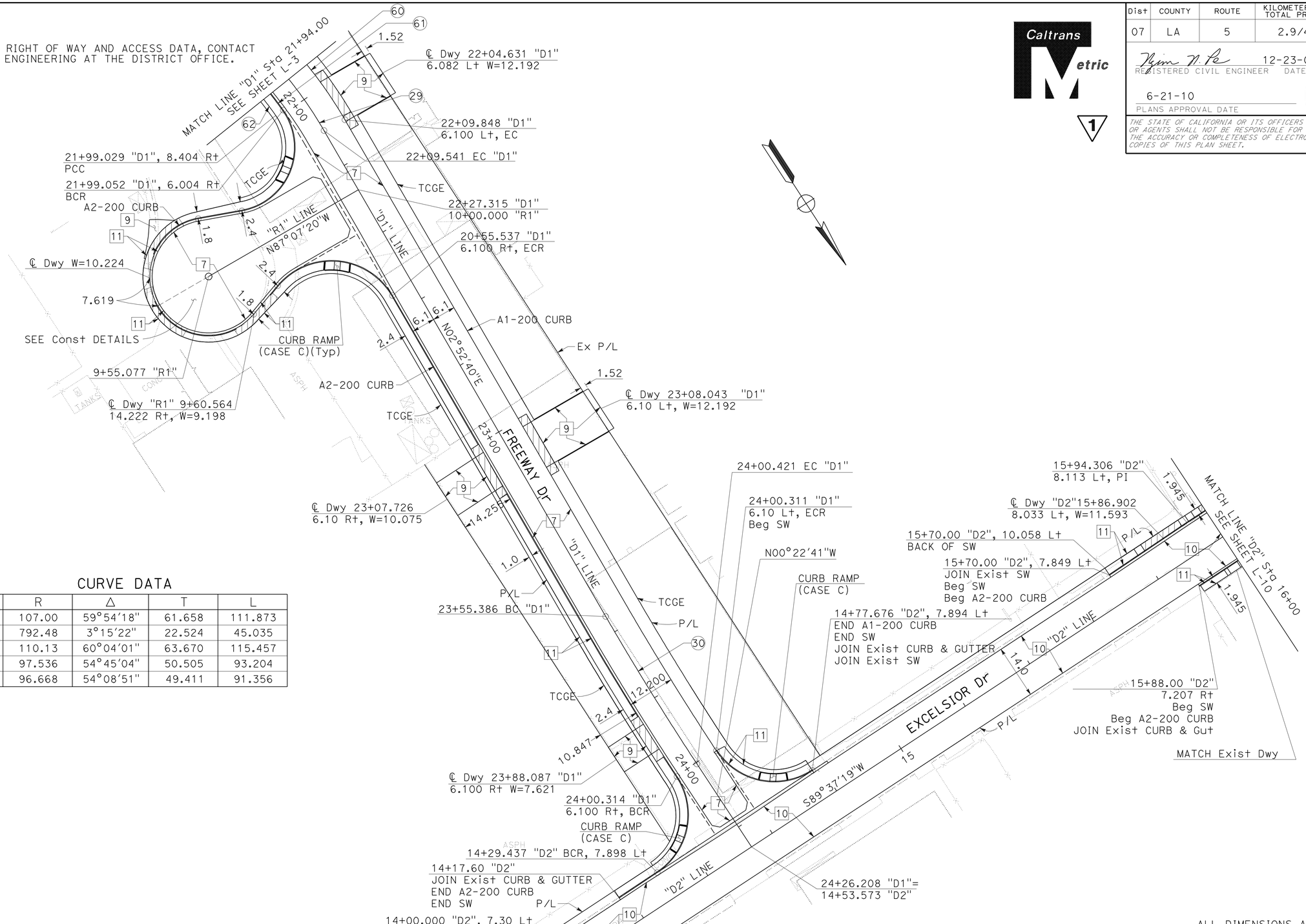

CURVE DATA

No.	R	Δ	T	L
29	107.00	59°54'18"	61.658	111.873
30	792.48	3°15'22"	22.524	45.035
60	110.13	60°04'01"	63.670	115.457
61	97.536	54°45'04"	50.505	93.204
62	96.668	54°08'51"	49.411	91.356

ALL DIMENSIONS ARE IN METERS UNLESS OTHERWISE SHOWN

LAYOUT

SCALE 1:500

L-11

1 **REVISED PER ADDENDUM No. 1 DATED APRIL 21, 2011**

KEVIN Q. NGUYEN	KN	9/09	REVISED BY / DATE REVISED
NGIM NANCY PE			CALCULATED-DESIGNED BY / CHECKED BY
FUNCTIONAL SUPERVISOR	NGIM NANCY PE		

STATE OF CALIFORNIA - DEPARTMENT OF TRANSPORTATION
Caltrans OFFICE OF DESIGN A

LAST REVISION 00-00-00 | DATE PLOTTED => 20-APR-2011 | TIME PLOTTED => 12:33

72159cea011.add

Dist	COUNTY	ROUTE	KILOMETER POST TOTAL PROJECT	SHEET No.	TOTAL SHEETS
07	LA	5	2.9/4.9	60	1082

Ngim N. Pe 12-23-09
REGISTERED CIVIL ENGINEER DATE

6-21-10
PLANS APPROVAL DATE

REGISTERED PROFESSIONAL ENGINEER NGIM NANCY PE No. 58161 Exp. 6-30-10 CIVIL STATE OF CALIFORNIA

THE STATE OF CALIFORNIA OR ITS OFFICERS OR AGENTS SHALL NOT BE RESPONSIBLE FOR THE ACCURACY OR COMPLETENESS OF ELECTRONIC COPIES OF THIS PLAN SHEET.

Caltrans Metric

1

NOTE:

FOR ACCURATE RIGHT OF WAY AND ACCESS DATA, CONTACT RIGHT OF WAY ENGINEERING AT THE DISTRICT OFFICE.

LEGEND:

- REMOVE CONCRETE (SIDEWALK & DRIVEWAY)
- REMOVE PCC PAVEMENT
- REMOVE AC SURFACING

ABBREVIATIONS:

BSW - BACK OF SIDEWALK

LIP - LIP OF GUTTER

TCGE - TEMPORARY CONSTRUCTION AND GRADING EASEMENT

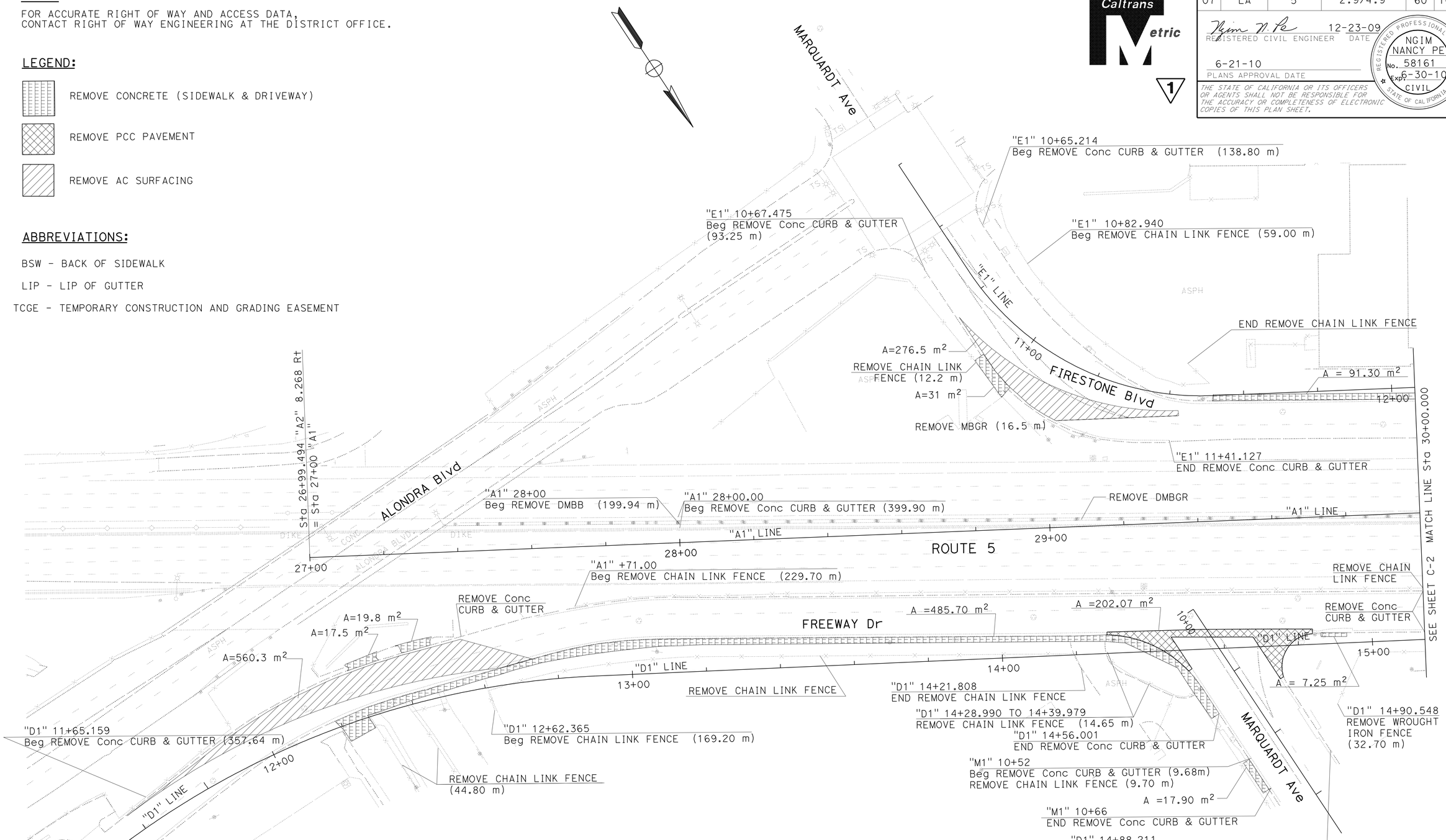

(REMOVAL PLAN)

ALL DIMENSIONS ARE IN METERS UNLESS OTHERWISE SHOWN

1 **REVISED PER ADDENDUM No. 1 DATED APRIL 21, 2011**

THIS PLAN IS ACCURATE FOR REMOVAL ITEMS WORK ONLY.

CONSTRUCTION DETAILS

SCALE 1:500

C-1

REVISED BY	DATE REVISED
KEVIN Q NGUYEN	3/07
NGIM NANCY PE	6/07

CALCULATED-DESIGNED BY
CHECKED BY

FUNCTIONAL SUPERVISOR
NGIM NANCY PE

STATE OF CALIFORNIA - DEPARTMENT OF TRANSPORTATION
Caltrans OFFICE OF DESIGN A

72159cga001.add

LAST REVISION DATE PLOTTED => 20-APR-2011
00-00-00 TIME PLOTTED => 12:33

Dist	COUNTY	ROUTE	KILOMETER POST TOTAL PROJECT	SHEET No.	TOTAL SHEETS
07	LA	5	2.9/4.9	61	1082

REGISTERED CIVIL ENGINEER 12-23-09 DATE

6-21-10
PLANS APPROVAL DATE

REGISTERED PROFESSIONAL ENGINEER NGIM NANCY PE No. 58161 Exp. 6-30-10 CIVIL STATE OF CALIFORNIA

THE STATE OF CALIFORNIA OR ITS OFFICERS OR AGENTS SHALL NOT BE RESPONSIBLE FOR THE ACCURACY OR COMPLETENESS OF ELECTRONIC COPIES OF THIS PLAN SHEET.

Caltrans Metric

1

NOTE:

FOR ACCURATE RIGHT OF WAY AND ACCESS DATA,
CONTACT RIGHT OF WAY ENGINEERING AT THE DISTRICT OFFICE.

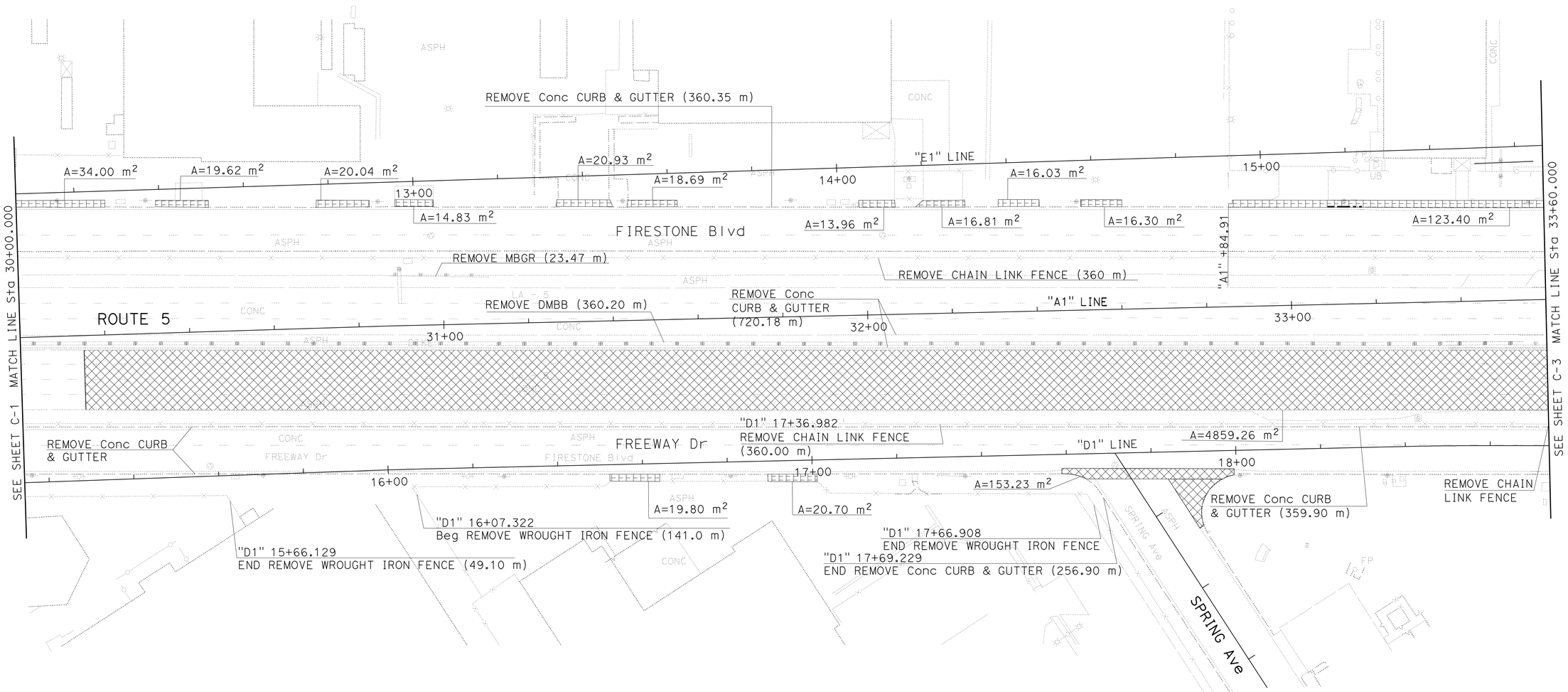

(REMOVAL PLAN)

ALL DIMENSIONS ARE IN METERS
UNLESS OTHERWISE SHOWN

1 **REVISED PER ADDENDUM No. 1 DATED APRIL 21, 2011**

THIS PLAN IS ACCURATE FOR REMOVAL ITEMS WORK ONLY.

CONSTRUCTION DETAILS

SCALE 1:500

C-2

REVISED BY	DATE REVISED
KEVIN Q NGUYEN	3/07
NGIM NANCY PE	6/07

CALCULATED-DESIGNED BY
CHECKED BY

FUNCTIONAL SUPERVISOR
NGIM NANCY PE

STATE OF CALIFORNIA - DEPARTMENT OF TRANSPORTATION
Caltrans OFFICE OF DESIGN A

72159cga002.add

LAST REVISION 00-00-00 | DATE PLOTTED => 20-APR-2011 | TIME PLOTTED => 12:33

BORDER LAST REVISED 3/1/2007 | RELATIVE BORDER SCALE IS IN MILLIMETERS 0 20 40 60 80 | USERNAME => trlenard | DGN FILE => 72159cga002.add | CU 07225 | EA 2159C1

Dist	COUNTY	ROUTE	KILOMETER POST TOTAL PROJECT	SHEET No.	TOTAL SHEETS
07	LA	5	2.9/4.9	62	1082

REGISTERED CIVIL ENGINEER 12-23-09 DATE

6-21-10
PLANS APPROVAL DATE

REGISTERED PROFESSIONAL ENGINEER NGIM NANCY PE No. 58161 Exp. 6-30-10 CIVIL STATE OF CALIFORNIA

THE STATE OF CALIFORNIA OR ITS OFFICERS OR AGENTS SHALL NOT BE RESPONSIBLE FOR THE ACCURACY OR COMPLETENESS OF ELECTRONIC COPIES OF THIS PLAN SHEET.

Caltrans Metric

1

NOTE:

FOR ACCURATE RIGHT OF WAY AND ACCESS DATA,
CONTACT RIGHT OF WAY ENGINEERING AT THE DISTRICT OFFICE.

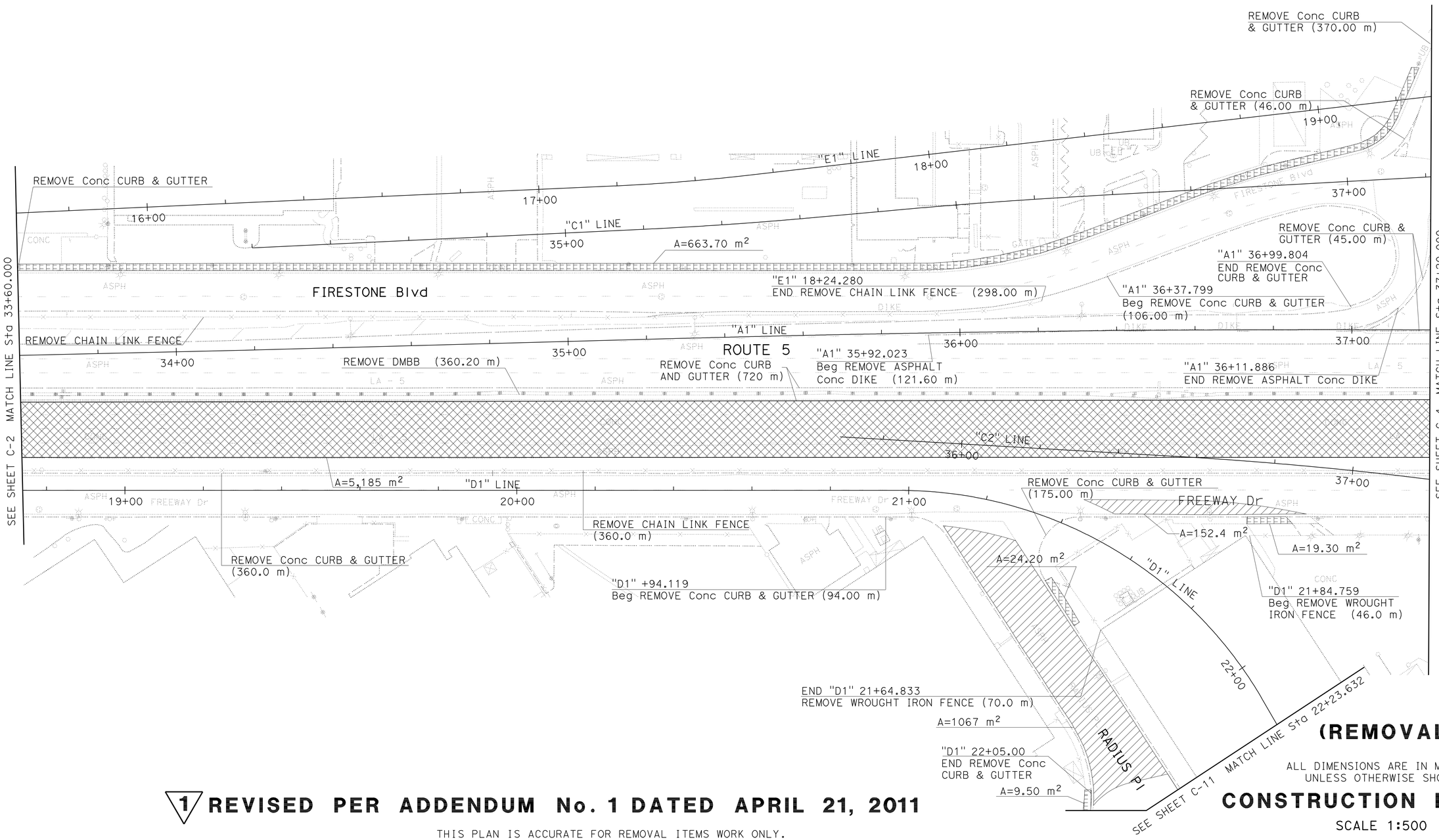

(REMOVAL PLAN)

ALL DIMENSIONS ARE IN METERS
UNLESS OTHERWISE SHOWN

CONSTRUCTION DETAILS

SCALE 1:500

C-3

1 **REVISED PER ADDENDUM No. 1 DATED APRIL 21, 2011**

THIS PLAN IS ACCURATE FOR REMOVAL ITEMS WORK ONLY.

REVISED BY	3/07
DATE REVISED	6/07
CALCULATED-DESIGNED BY	KEVIN Q NGUYEN
CHECKED BY	NGIM NANCY PE
FUNCTIONAL SUPERVISOR	NGIM NANCY PE

STATE OF CALIFORNIA - DEPARTMENT OF TRANSPORTATION
Caltrans OFFICE OF DESIGN A

72159cga003.add

LAST REVISION 00-00-00
DATE PLOTTED => 20-APR-2011
TIME PLOTTED => 12:33

Dist	COUNTY	ROUTE	KILOMETER POST TOTAL PROJECT	SHEET No.	TOTAL SHEETS
07	LA	5	2.9/4.9	63	1082

REGISTERED CIVIL ENGINEER 12-23-09 DATE

6-21-10
PLANS APPROVAL DATE

REGISTERED PROFESSIONAL ENGINEER NGIM NANCY PE No. 58161 Exp. 6-30-10 CIVIL STATE OF CALIFORNIA

THE STATE OF CALIFORNIA OR ITS OFFICERS OR AGENTS SHALL NOT BE RESPONSIBLE FOR THE ACCURACY OR COMPLETENESS OF ELECTRONIC COPIES OF THIS PLAN SHEET.

Caltrans Metric

1

NOTE:

FOR ACCURATE RIGHT OF WAY AND ACCESS DATA, CONTACT RIGHT OF WAY ENGINEERING AT THE DISTRICT OFFICE.

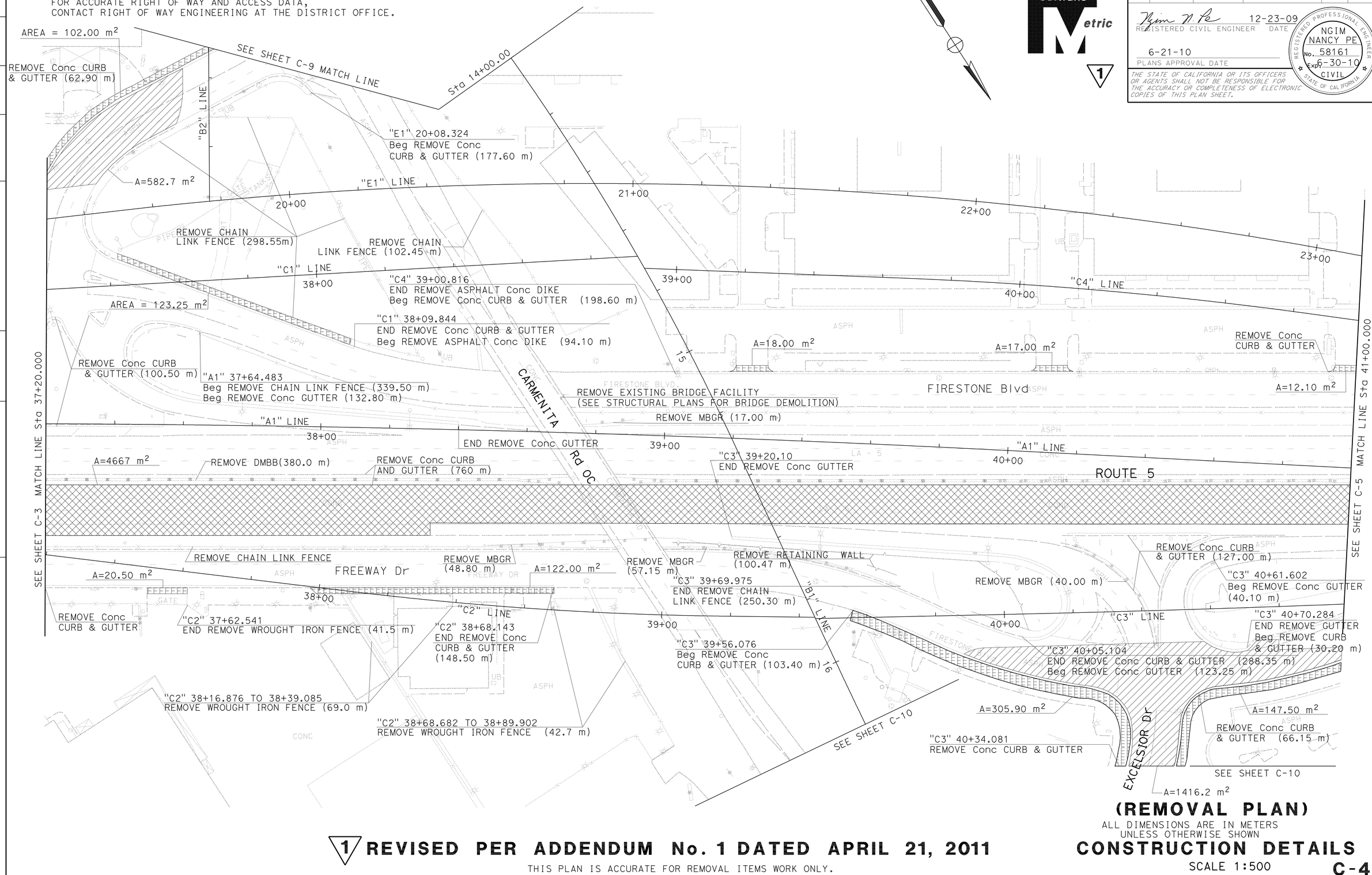

(REMOVAL PLAN)

ALL DIMENSIONS ARE IN METERS UNLESS OTHERWISE SHOWN

CONSTRUCTION DETAILS

SCALE 1:500

C-4

1 **REVISED PER ADDENDUM No. 1 DATED APRIL 21, 2011**

THIS PLAN IS ACCURATE FOR REMOVAL ITEMS WORK ONLY.

CALCULATED-DESIGNED BY	KEVIN Q NGUYEN	REVISED BY	3/07
CHECKED BY	NGIM NANCY PE	DATE REVISED	6/07
FUNCTIONAL SUPERVISOR	NGIM NANCY PE		

STATE OF CALIFORNIA - DEPARTMENT OF TRANSPORTATION
Caltrans OFFICE OF DESIGN A

72159cga004.add

LAST REVISION 00-00-00 | DATE PLOTTED => 20-APR-2011 | TIME PLOTTED => 12:33

Dist	COUNTY	ROUTE	KILOMETER POST TOTAL PROJECT	SHEET No.	TOTAL SHEETS
07	LA	5	2.9/4.9	67	1082

Ngim N. Pe 12-23-09
REGISTERED CIVIL ENGINEER DATE

6-21-10
PLANS APPROVAL DATE

REGISTERED PROFESSIONAL ENGINEER NGIM NANCY PE No. 58161 Exp. 6-30-10 CIVIL STATE OF CALIFORNIA

THE STATE OF CALIFORNIA OR ITS OFFICERS OR AGENTS SHALL NOT BE RESPONSIBLE FOR THE ACCURACY OR COMPLETENESS OF ELECTRONIC COPIES OF THIS PLAN SHEET.

Caltrans Metric

1

NOTE:

FOR ACCURATE RIGHT OF WAY AND ACCESS DATA,
CONTACT RIGHT OF WAY ENGINEERING AT THE DISTRICT OFFICE.

(REMOVAL PLAN)

ALL DIMENSIONS ARE IN METERS
UNLESS OTHERWISE SHOWN

CONSTRUCTION DETAILS

SCALE 1:500

C-8

1 **REVISED PER ADDENDUM No. 1 DATED APRIL 21, 2011**

THIS PLAN IS ACCURATE FOR REMOVAL ITEMS WORK ONLY.

	REVISED BY	DATE REVISED
	KN	9/09

CALCULATED-DESIGNED BY: KEVIN Q NGUYEN
CHECKED BY: NGIM NANCY PE
FUNCTIONAL SUPERVISOR: NGIM NANCY PE

STATE OF CALIFORNIA - DEPARTMENT OF TRANSPORTATION
Caltrans OFFICE OF DESIGN A

72159cga008.add

LAST REVISION 00-00-00
DATE PLOTTED => 20-APR-2011
TIME PLOTTED => 12:33

Dist	COUNTY	ROUTE	KILOMETER POST TOTAL PROJECT	SHEET No.	TOTAL SHEETS
07	LA	5	2.9/4.9	80	1082

LICENSED LANDSCAPE ARCHITECT

6-21-10
PLANS APPROVAL DATE

THE STATE OF CALIFORNIA OR ITS OFFICERS OR AGENTS SHALL NOT BE RESPONSIBLE FOR THE ACCURACY OR COMPLETENESS OF ELECTRONIC COPIES OF THIS PLAN SHEET.

LICENSED LANDSCAPE ARCHITECT JENNIFER TAIRA NO. 4625 STATE OF CALIFORNIA
08/31/11 PROJECT DATE
12/23/09 DATE

Caltrans Metric

1

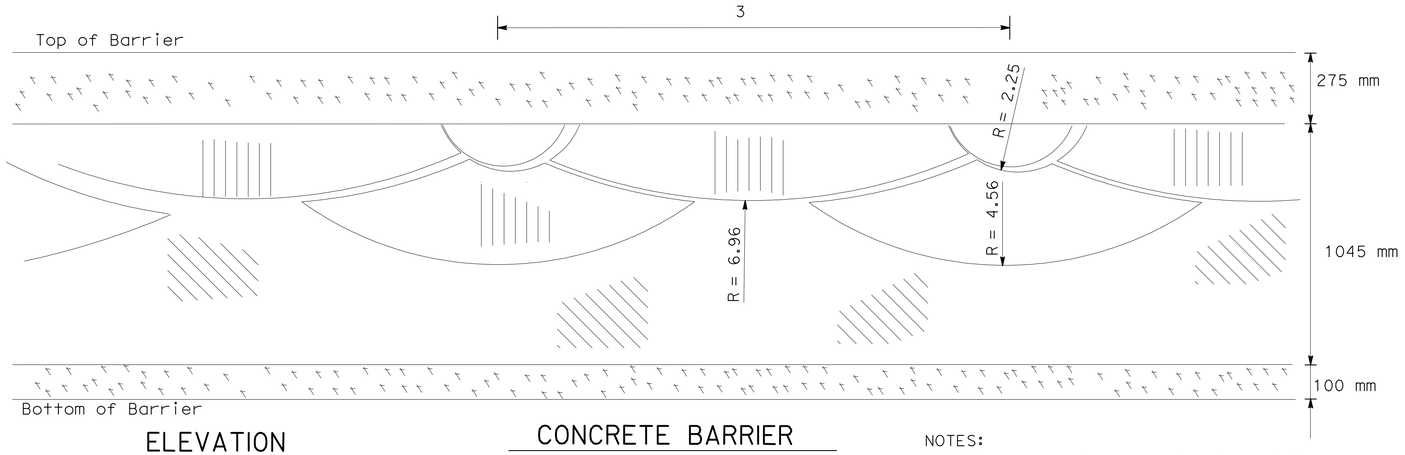

ELEVATION

CONCRETE BARRIER

ARCHITECTURAL SURFACE TREATMENT
(SCALLOP WALL PATTERN)

NOTES:

1. Pattern repeats every 3 meters O/C.
2. Quantity of concrete barrier architectural treatment measured along vertical barrier height and length.

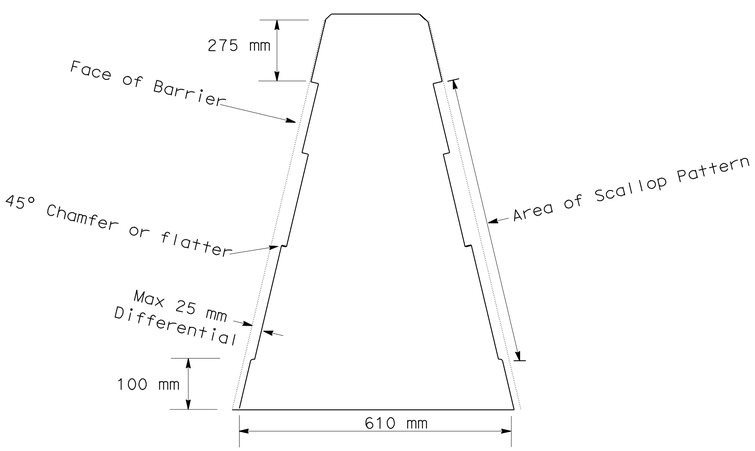

CONCRETE BARRIER (TYPE 60G)
(Scallop Pattern Differential)

SURFACE TEXTURES AND FINISHES:

- Smooth Finish
- Light Fractured Granite
- Heavy Fractured Granite

ALL DIMENSIONS ARE IN METERS
UNLESS OTHERWISE SHOWN.

CONSTRUCTION BARRIER TYPE 60
ARCHITECTURAL TREATMENT
CONSTRUCTION DETAILS

NO SCALE

C-21

1 REVISED PER ADDENDUM No. 1 DATED APRIL 21, 2011

STATE OF CALIFORNIA - DEPARTMENT OF TRANSPORTATION
Caltrans LANDSCAPE ARCHITECTURE

SENIOR LANDSCAPE ARCHITECT: JENNIFER TAIRA
CALCULATED-DESIGNED BY: RICH KESTER
CHECKED BY: JENNIFER TAIRA
REVISED BY
DATE REVISED

LAST REVISION 00-00-00
DATE PLOTTED => 20-APR-2011
TIME PLOTTED => 12:33

Dist	COUNTY	ROUTE	KILOMETER POST TOTAL PROJECT	SHEET No.	TOTAL SHEETS
07	LA	5	2.9/4.9	84	1082

REGISTERED CIVIL ENGINEER 12-23-09 DATE

6-21-10
PLANS APPROVAL DATE

REGISTERED PROFESSIONAL ENGINEER NGIM NANCY PE No. 58161 Exp. 6-30-10 CIVIL STATE OF CALIFORNIA

THE STATE OF CALIFORNIA OR ITS OFFICERS OR AGENTS SHALL NOT BE RESPONSIBLE FOR THE ACCURACY OR COMPLETENESS OF ELECTRONIC COPIES OF THIS PLAN SHEET.

Caltrans Metric

1

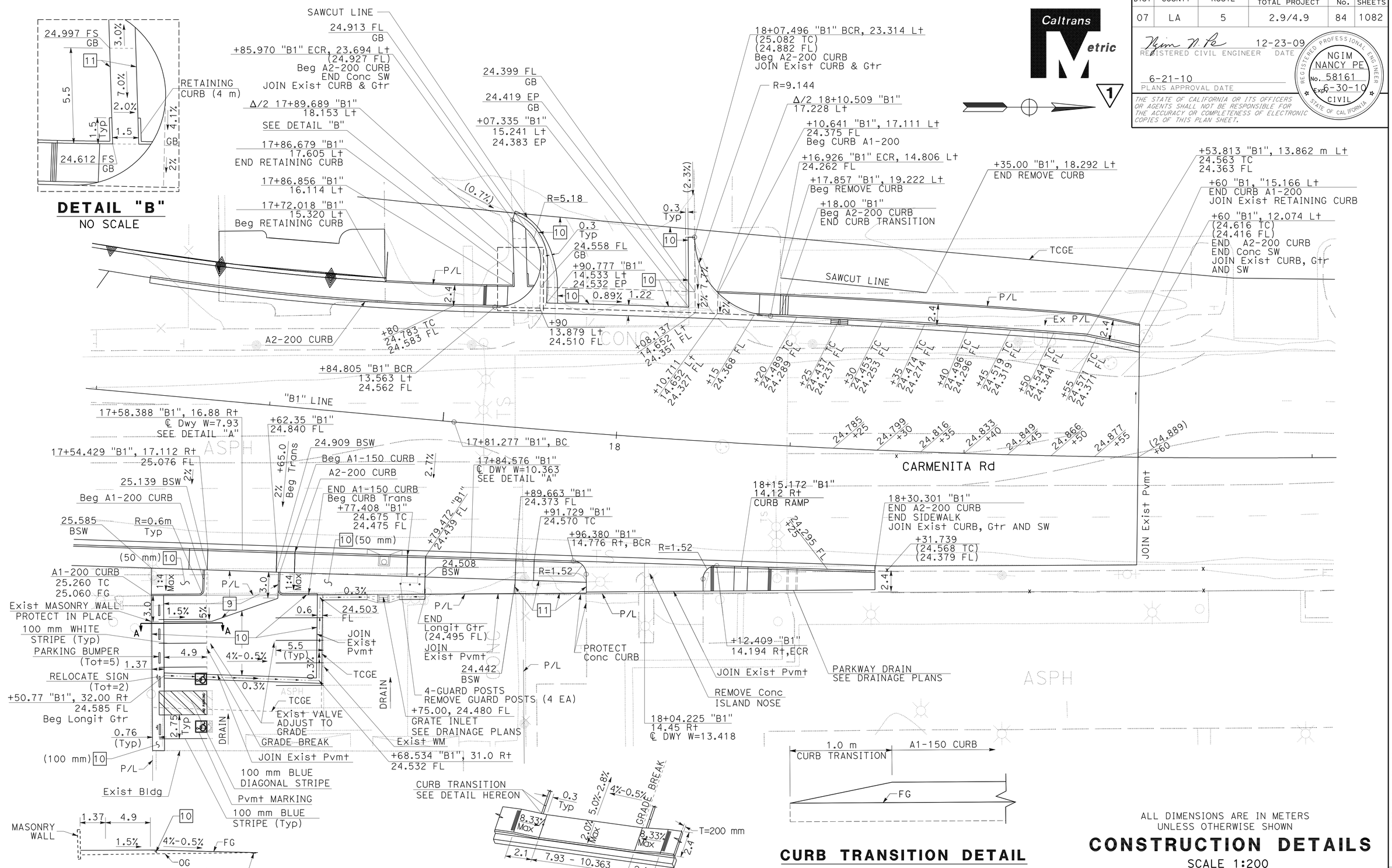

ALL DIMENSIONS ARE IN METERS UNLESS OTHERWISE SHOWN

CONSTRUCTION DETAILS

SCALE 1:200

C-25

1 REVISED PER ADDENDUM No. 1 DATED APRIL 21, 2011

REVISED BY	YTT
DATE REVISED	05/09
CALCULATED-DESIGNED BY	NGIM NANCY PE
CHECKED BY	KEVIN Q NGUYEN
FUNCTIONAL SUPERVISOR	NGIM NANCY PE

STATE OF CALIFORNIA - DEPARTMENT OF TRANSPORTATION
Caltrans OFFICE OF DESIGN A

72159cga025.add

LAST REVISION 00-00-00 | DATE PLOTTED => 20-APR-2011 | TIME PLOTTED => 12:33

Dist	COUNTY	ROUTE	KILOMETER POST TOTAL PROJECT	SHEET No.	TOTAL SHEETS
07	LA	5	2.9/4.9	105	1082

Ngim N. Pe 12-23-09
REGISTERED CIVIL ENGINEER DATE

6-21-10
PLANS APPROVAL DATE

REGISTERED PROFESSIONAL ENGINEER NGIM NANCY PE No. 58161 Exp. 6-30-10 CIVIL STATE OF CALIFORNIA

THE STATE OF CALIFORNIA OR ITS OFFICERS OR AGENTS SHALL NOT BE RESPONSIBLE FOR THE ACCURACY OR COMPLETENESS OF ELECTRONIC COPIES OF THIS PLAN SHEET.

Caltrans Metric

1

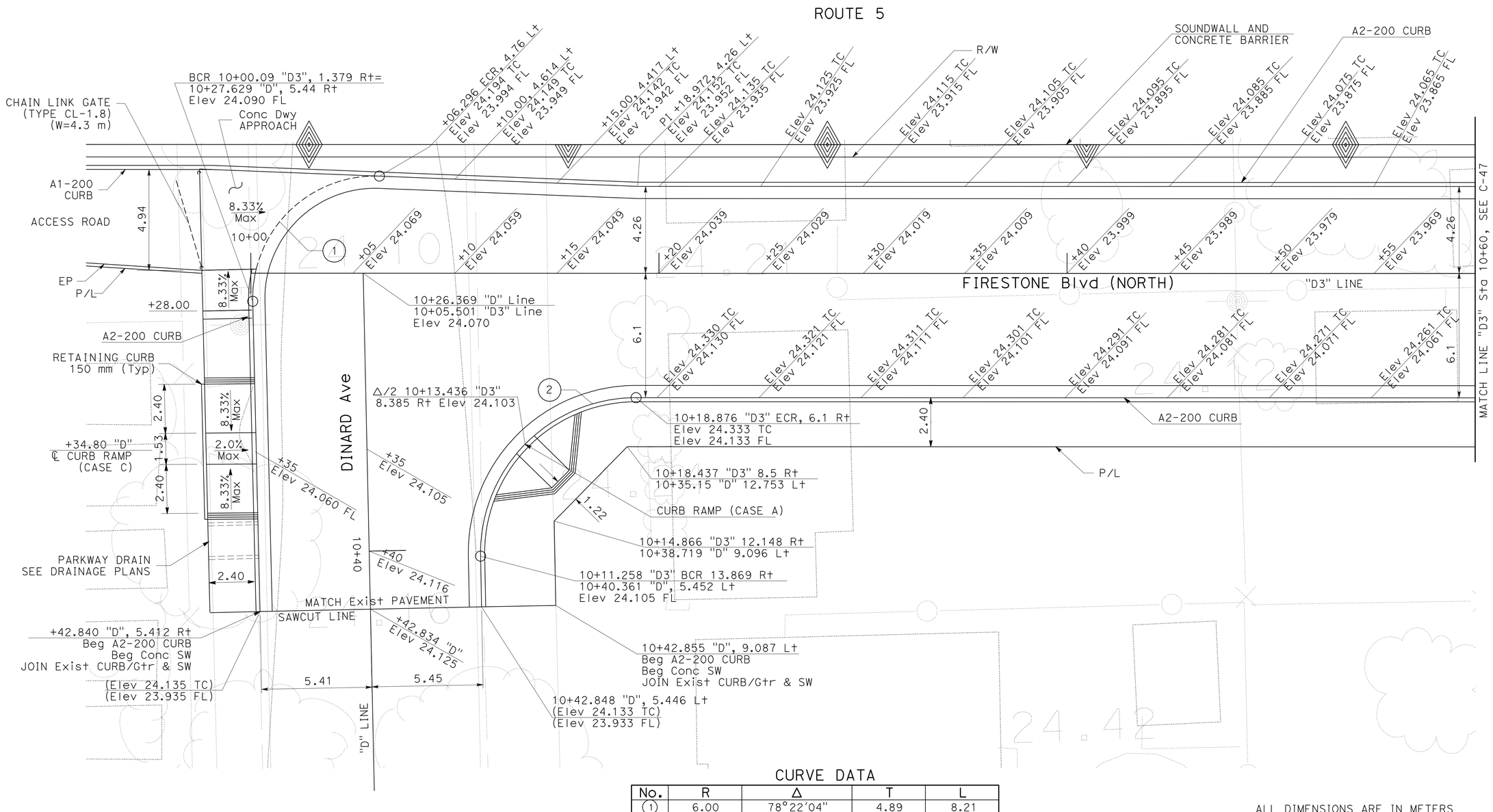

CURVE DATA

No.	R	Δ	T	L
1	6.00	78°22'04"	4.89	8.21
2	7.62	91°7'18"	7.77	12.12

ALL DIMENSIONS ARE IN METERS UNLESS OTHERWISE SHOWN

1 REVISED PER ADDENDUM No. 1 DATED APRIL 21, 2011

CONSTRUCTION DETAILS

SCALE 1:100

C-46

WILL CARPIO	WC	5/09	
NANCY PE			
CALCULATED-DESIGNED BY	REVISED BY		
CHECKED BY	DATE REVISED		
FUNCTIONAL SUPERVISOR			
NGIM NANCY PE			

STATE OF CALIFORNIA - DEPARTMENT OF TRANSPORTATION
Caltrans OFFICE OF DESIGN A

72159cga046.add

LAST REVISION 00-00-00 | DATE PLOTTED => 20-APR-2011 | TIME PLOTTED => 12:34

Dist	COUNTY	ROUTE	KILOMETER POST TOTAL PROJECT	SHEET No.	TOTAL SHEETS
07	LA	5	2.9/4.9	106	1082

REGISTERED CIVIL ENGINEER 12-23-09 DATE

6-21-10
PLANS APPROVAL DATE

REGISTERED PROFESSIONAL ENGINEER NGIM NANCY PE No. 58161 Exp. 6-30-10 CIVIL STATE OF CALIFORNIA

THE STATE OF CALIFORNIA OR ITS OFFICERS OR AGENTS SHALL NOT BE RESPONSIBLE FOR THE ACCURACY OR COMPLETENESS OF ELECTRONIC COPIES OF THIS PLAN SHEET.

Caltrans Metric

1

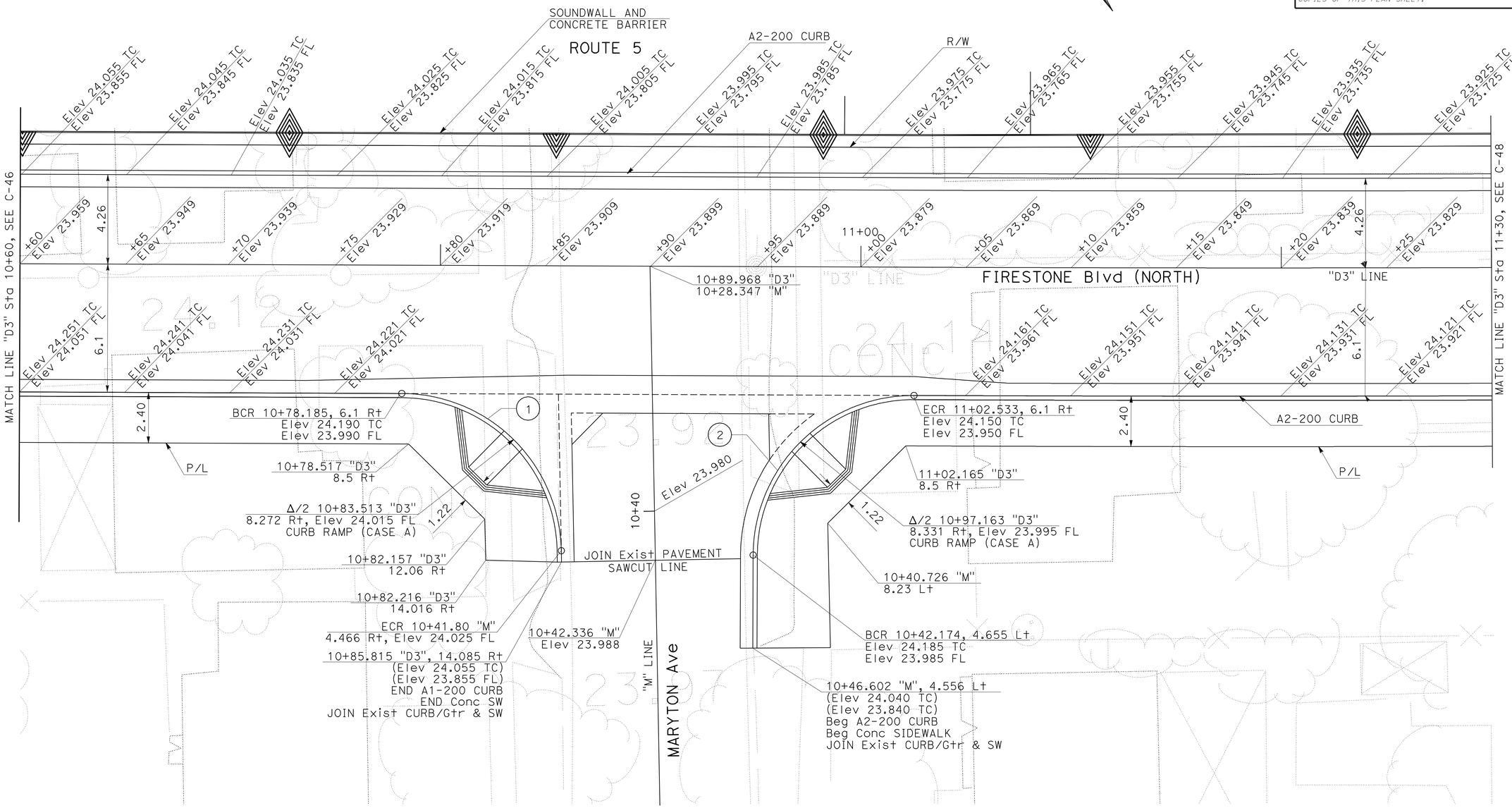

CURVE DATA

No.	R	Δ	T	L
1	7.62	88°43'11"	7.45	11.80
2	7.62	90°0'43"	7.62	11.97

ALL DIMENSIONS ARE IN METERS UNLESS OTHERWISE SHOWN

CONSTRUCTION DETAILS

SCALE 1:100

C-47

1 REVISED PER ADDENDUM No. 1 DATED APRIL 21, 2011

WILL CARPIO	WC	CALCULATED-DESIGNED BY	
NANCY PE	5/09	CHECKED BY	
REVISED BY		FUNCTIONAL SUPERVISOR	
DATE REVISED		NGIM NANCY PE	

STATE OF CALIFORNIA - DEPARTMENT OF TRANSPORTATION
Caltrans OFFICE OF DESIGN A

72159cga047.add

LAST REVISION 00-00-00 DATE PLOTTED => 20-APR-2011 TIME PLOTTED => 12:44

Dist	COUNTY	ROUTE	KILOMETER POST TOTAL PROJECT	SHEET No.	TOTAL SHEETS
07	LA	5	2.9/4.9	107	1082

REGISTERED CIVIL ENGINEER — DATE 12-23-09

PLANS APPROVAL DATE 6-21-10

REGISTERED PROFESSIONAL ENGINEER NGIM NANCY PE No. 58161 Exp. 6-30-10 CIVIL STATE OF CALIFORNIA

THE STATE OF CALIFORNIA OR ITS OFFICERS OR AGENTS SHALL NOT BE RESPONSIBLE FOR THE ACCURACY OR COMPLETENESS OF ELECTRONIC COPIES OF THIS PLAN SHEET.

Caltrans Metric

1

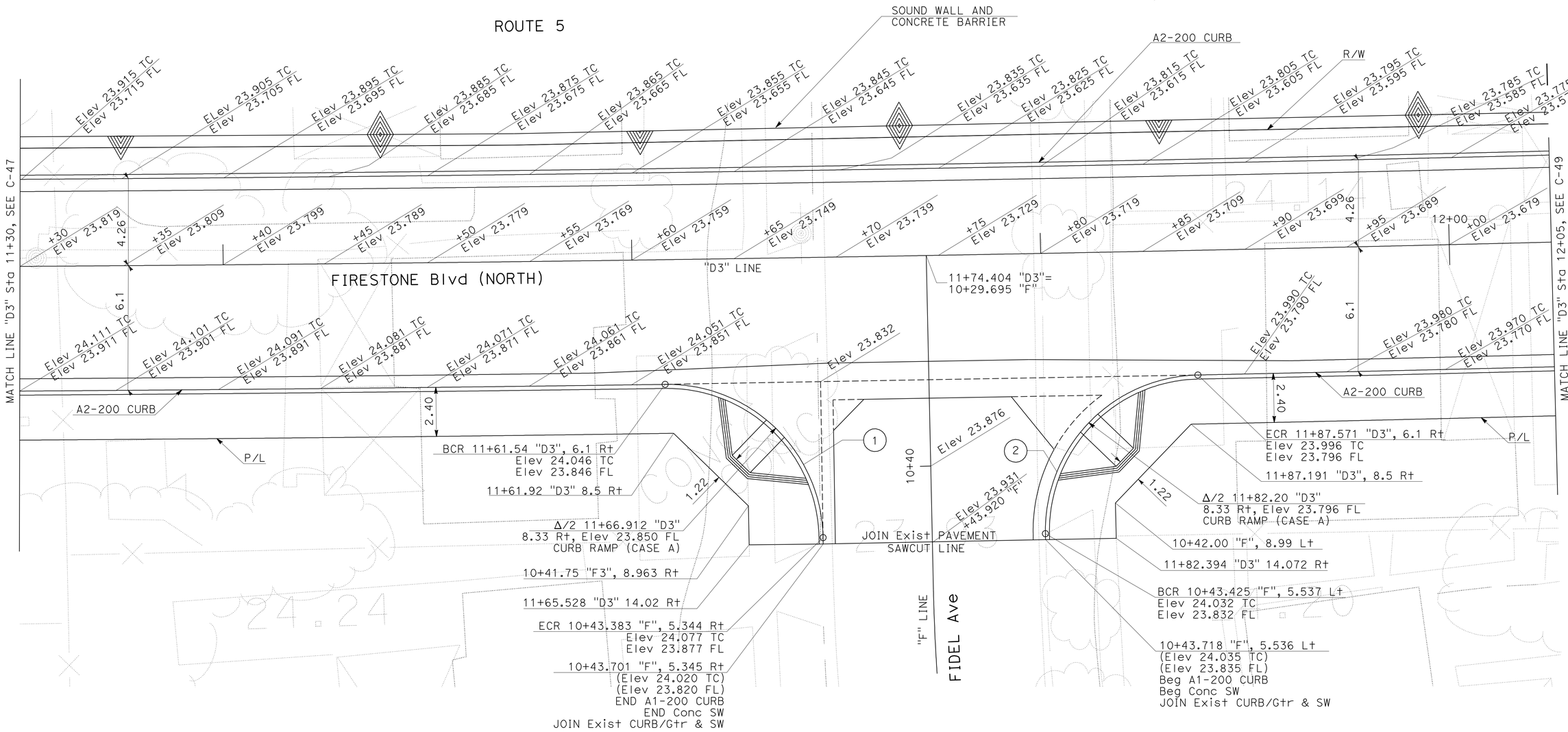

CURVE DATA

No.	R	Δ	T	L
1	7.62	89°53′29"	7.61	11.96
2	7.62	89°53′28"	7.61	11.95

ALL DIMENSIONS ARE IN METERS UNLESS OTHERWISE SHOWN.

CONSTRUCTION DETAILS

SCALE 1:100

C-48

1 REVISED PER ADDENDUM No. 1 DATED APRIL 21, 2011

STATE OF CALIFORNIA - DEPARTMENT OF TRANSPORTATION
Caltrans OFFICE OF DESIGN A

FUNCTIONAL SUPERVISOR NGIM NANCY PE
CALCULATED-DESIGNED BY WILL CARPIO
CHECKED BY NANCY PE
REVISED BY WC
DATE REVISED 5/09

LAST REVISION 00-00-00
DATE PLOTTED => 20-APR-2011
TIME PLOTTED => 12:34

Dist	COUNTY	ROUTE	KILOMETER POST TOTAL PROJECT	SHEET No.	TOTAL SHEETS
07	LA	5	2.9/4.9	108	1082

REGISTERED CIVIL ENGINEER 12-23-09 DATE

6-21-10
PLANS APPROVAL DATE

REGISTERED PROFESSIONAL ENGINEER NGIM NANCY PE No. 58161 Exp. 6-30-10 CIVIL STATE OF CALIFORNIA

THE STATE OF CALIFORNIA OR ITS OFFICERS OR AGENTS SHALL NOT BE RESPONSIBLE FOR THE ACCURACY OR COMPLETENESS OF ELECTRONIC COPIES OF THIS PLAN SHEET.

Caltrans Metric

1

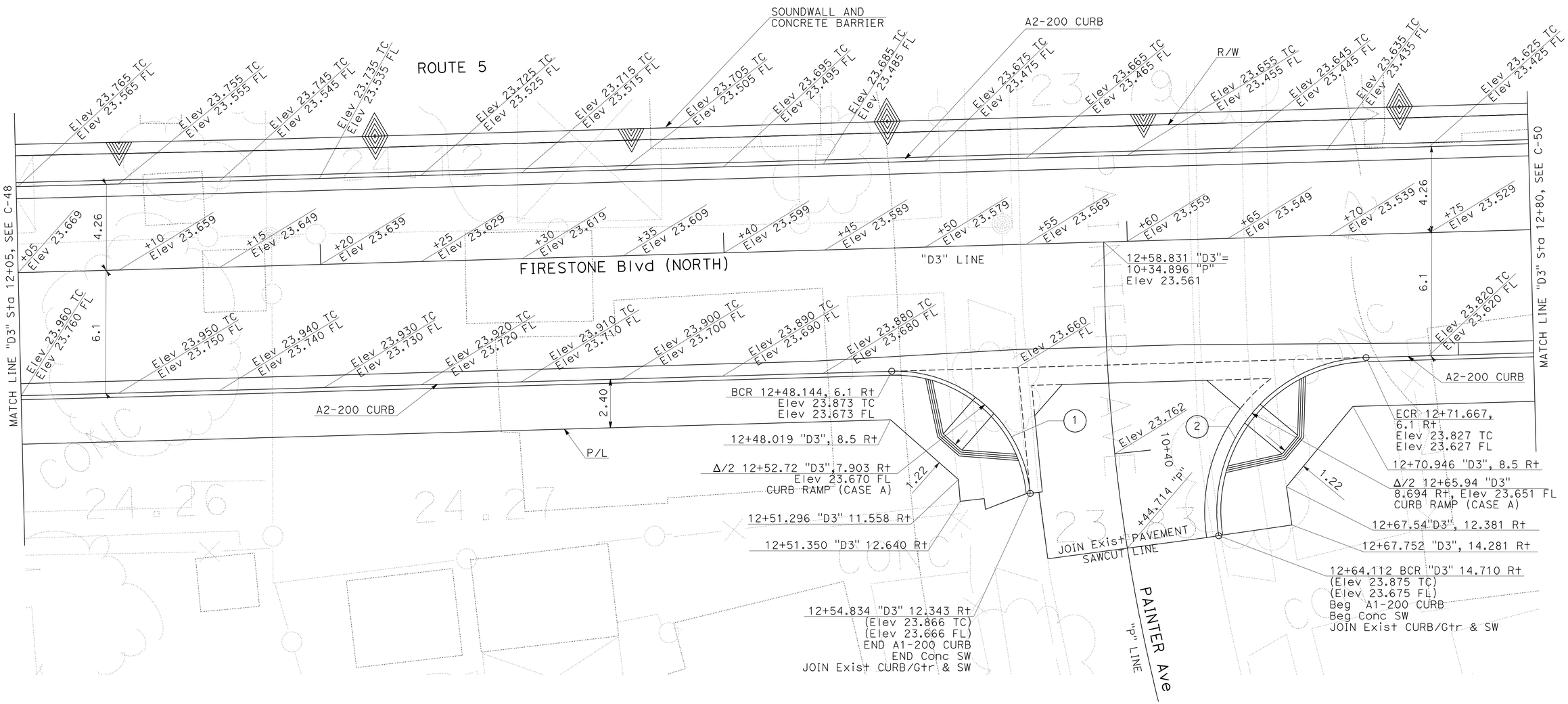

CURVE DATA

No.	R	Δ	T	L
1	6.71	86°2'37"	6.26	10.07
2	7.62	97°27'53"	8.68	12.96

ALL DIMENSIONS ARE IN METERS UNLESS OTHERWISE SHOWN

CONSTRUCTION DETAILS

SCALE 1:100

C-49

1 REVISED PER ADDENDUM No. 1 DATED APRIL 21, 2011

STATE OF CALIFORNIA - DEPARTMENT OF TRANSPORTATION
Caltrans OFFICE OF DESIGN A

FUNCTIONAL SUPERVISOR: NGIM NANCY PE
CALCULATED-DESIGNED BY: WILL CARPIO
CHECKED BY: NANCY PE
REVISED BY: WC
DATE REVISED: 5/09

LAST REVISION 00-00-00
DATE PLOTTED => 20-APR-2011
TIME PLOTTED => 12:34

Dist	COUNTY	ROUTE	KILOMETER POST TOTAL PROJECT	SHEET No.	TOTAL SHEETS
07	LA	5	2.9/4.9	110	1082

Ngim N. Pe 12-23-09
REGISTERED CIVIL ENGINEER DATE

6-21-10
PLANS APPROVAL DATE

REGISTERED PROFESSIONAL ENGINEER NGIM NANCY PE No. 58161 Exp. 6-30-10 CIVIL STATE OF CALIFORNIA

THE STATE OF CALIFORNIA OR ITS OFFICERS OR AGENTS SHALL NOT BE RESPONSIBLE FOR THE ACCURACY OR COMPLETENESS OF ELECTRONIC COPIES OF THIS PLAN SHEET.

Caltrans Metric

1

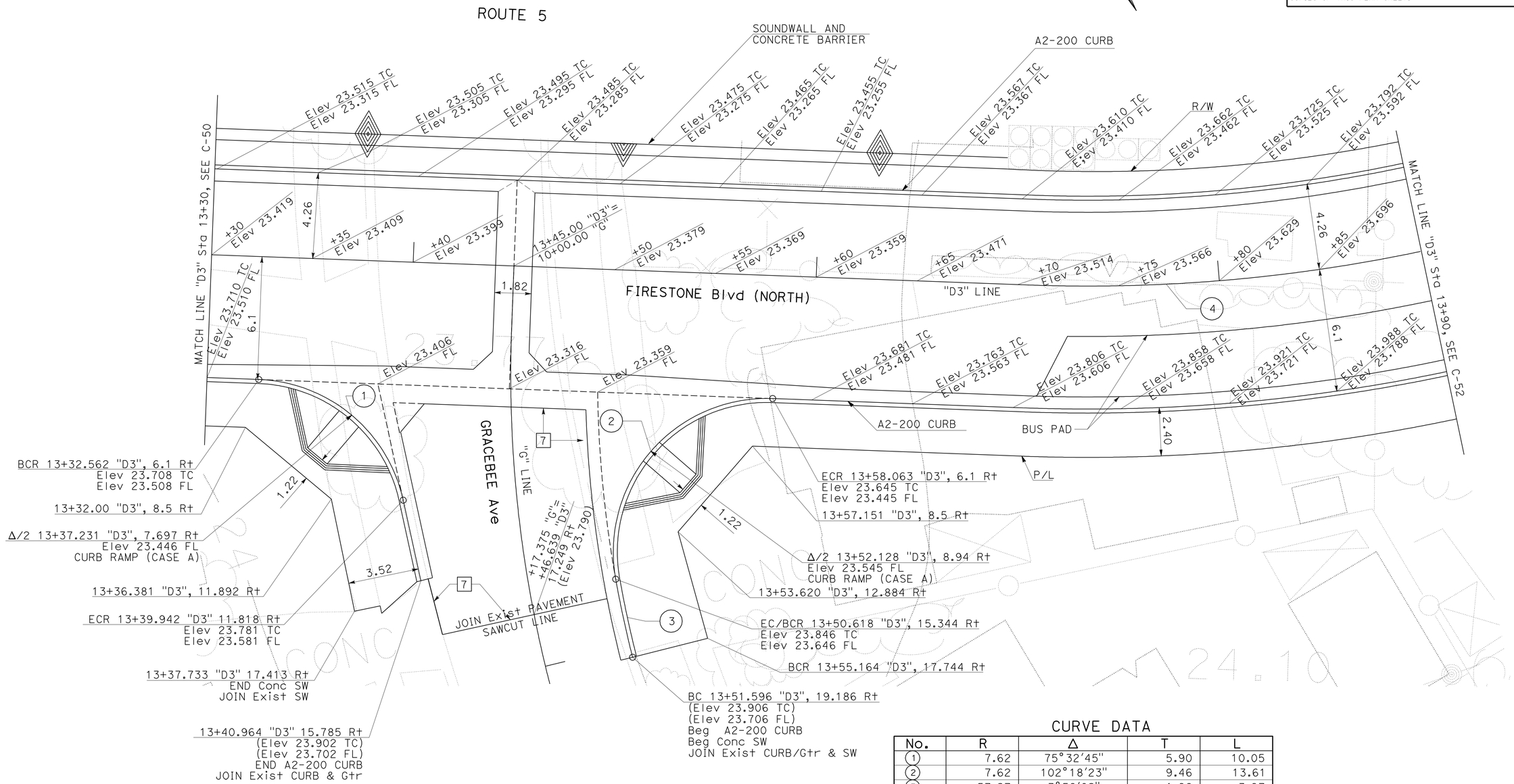

CURVE DATA

No.	R	Δ	T	L
1	7.62	75°32′45"	5.90	10.05
2	7.62	102°18′23"	9.46	13.61
3	57.27	3°58′02"	1.98	3.97
4	80.00	34°39′07"	24.96	48.38

ALL DIMENSIONS ARE IN METERS UNLESS OTHERWISE SHOWN

CONSTRUCTION DETAILS

SCALE 1:100

C-51

1 REVISED PER ADDENDUM No. 1 DATED APRIL 21, 2011

STATE OF CALIFORNIA - DEPARTMENT OF TRANSPORTATION
Caltrans OFFICE OF DESIGN A

FUNCTIONAL SUPERVISOR: NGIM NANCY PE
CALCULATED-DESIGNED BY: WILL CARPIO
CHECKED BY: NGIM NANCY PE
REVISED BY: WC
DATE REVISED: 5/09

LAST REVISION 00-00-00
DATE PLOTTED => 20-APR-2011
TIME PLOTTED => 12:34

Dist	COUNTY	ROUTE	KILOMETER POST TOTAL PROJECT	SHEET No.	TOTAL SHEETS
07	LA	5	2.9/4.9	163	1082

Ralph M. Sasaki 12-23-09
REGISTERED CIVIL ENGINEER DATE

6-21-10
PLANS APPROVAL DATE

REGISTERED PROFESSIONAL ENGINEER RALPH M. SASAKI No. 30849 Exp. 3/31/10 CIVIL STATE OF CALIFORNIA

THE STATE OF CALIFORNIA OR ITS OFFICERS OR AGENTS SHALL NOT BE RESPONSIBLE FOR THE ACCURACY OR COMPLETENESS OF ELECTRONIC COPIES OF THIS PLAN SHEET.

Caltrans Metric

1

NOTE: THE CONTRACTOR SHALL VERIFY LOCATIONS AND ELEVATIONS OF EXISTING DRAINAGE SYSTEMS BEFORE COMMENCEMENT OF WORK.

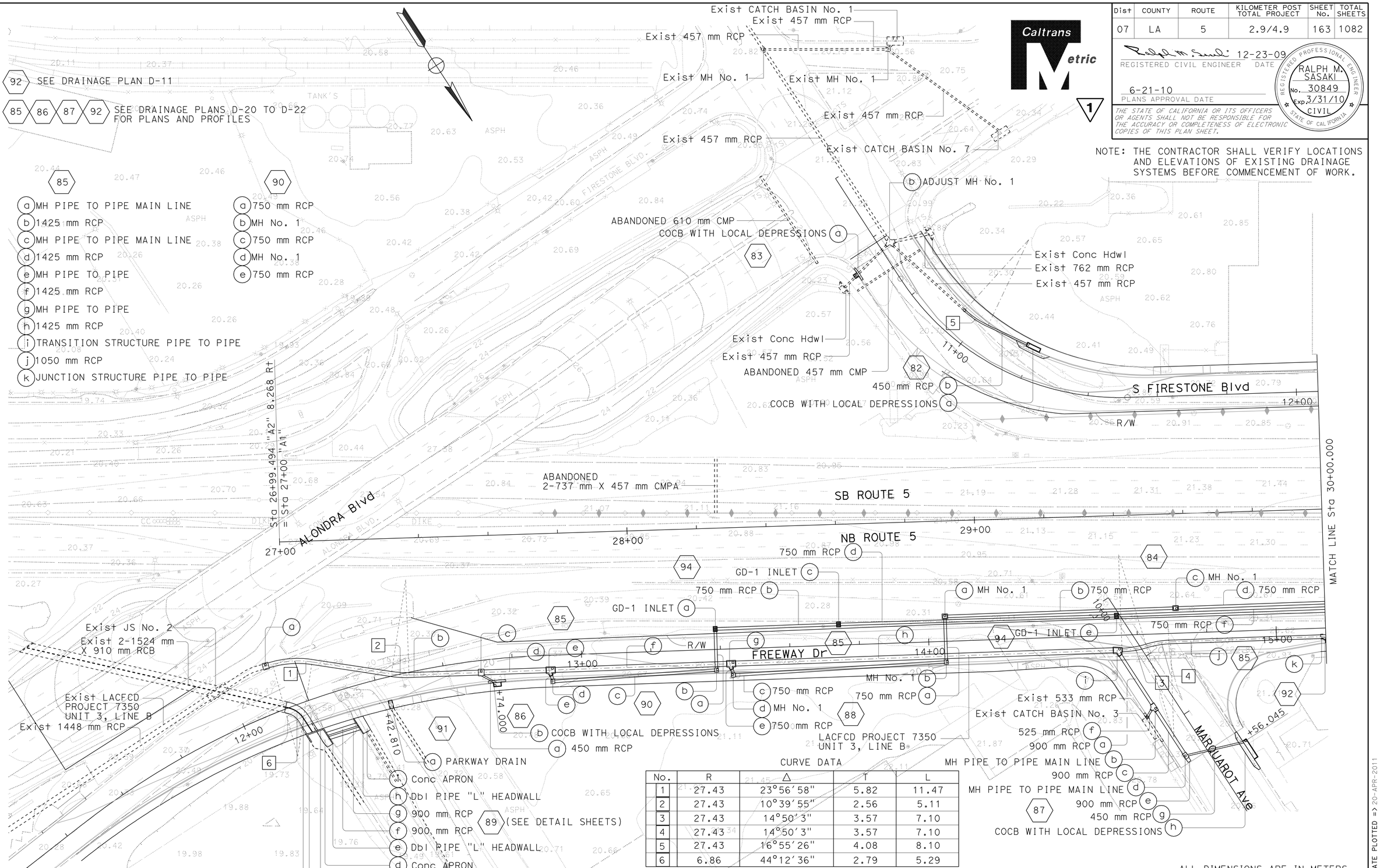

85

a MH PIPE TO PIPE MAIN LINE
b 1425 mm RCP
c MH PIPE TO PIPE MAIN LINE
d 1425 mm RCP
e MH PIPE TO PIPE
f 1425 mm RCP
g MH PIPE TO PIPE
h 1425 mm RCP
i TRANSITION STRUCTURE PIPE TO PIPE
j 1050 mm RCP
k JUNCTION STRUCTURE PIPE TO PIPE

90

a 750 mm RCP
b MH No. 1
c 750 mm RCP
d MH No. 1
e 750 mm RCP

CURVE DATA

No.	R	Δ	T	L
1	27.43	23°56′58″	5.82	11.47
2	27.43	10°39′55″	2.56	5.11
3	27.43	14°50′3″	3.57	7.10
4	27.43	14°50′3″	3.57	7.10
5	27.43	16°55′26″	4.08	8.10
6	6.86	44°12′36″	2.79	5.29

1 REVISED PER ADDENDUM No. 1 DATED APRIL 21, 2011

THIS PLAN ACCURATE FOR DRAINAGE WORK ONLY.

ALL DIMENSIONS ARE IN METERS UNLESS OTHERWISE SHOWN

DRAINAGE PLAN

SCALE 1:500 **D-10**

REVISED BY	DATE REVISED
S. M. TAN W. Y. LEE	R. M. SASAKI
CALCULATED-DESIGNED BY	CHECKED BY
FUNCTIONAL SUPERVISOR	RALPH M. SASAKI

STATE OF CALIFORNIA - DEPARTMENT OF TRANSPORTATION
Caltrans
HYDRAULICS

LAST REVISION 00-00-00 | DATE PLOTTED => 20-APR-2011 | TIME PLOTTED => 12:34

Dist	COUNTY	ROUTE	KILOMETER POST TOTAL PROJECT	SHEET No.	TOTAL SHEETS
07	LA	5	2.9/4.9	164	1082

Caltrans Metric

REGISTERED CIVIL ENGINEER 12-23-09 DATE

6-21-10
PLANS APPROVAL DATE

REGISTERED PROFESSIONAL ENGINEER RALPH M. SASAKI No. 30849 Exp. 3/31/10 CIVIL STATE OF CALIFORNIA

THE STATE OF CALIFORNIA OR ITS OFFICERS OR AGENTS SHALL NOT BE RESPONSIBLE FOR THE ACCURACY OR COMPLETENESS OF ELECTRONIC COPIES OF THIS PLAN SHEET.

1

NOTE: THE CONTRACTOR SHALL VERIFY LOCATIONS AND ELEVATIONS OF EXISTING DRAINAGE SYSTEMS BEFORE COMMENCEMENT OF WORK.

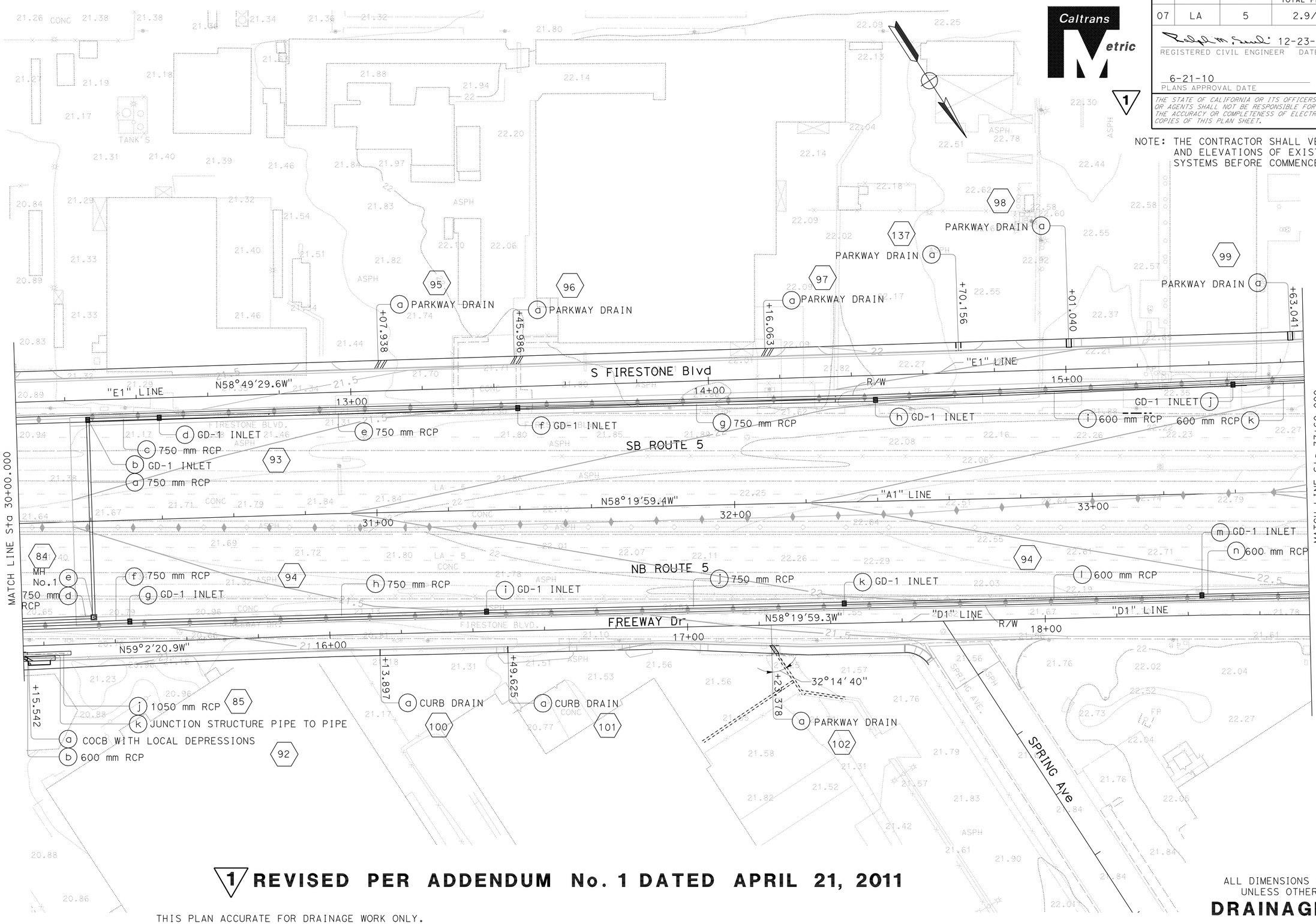

1 **REVISED PER ADDENDUM No. 1 DATED APRIL 21, 2011**

THIS PLAN ACCURATE FOR DRAINAGE WORK ONLY.

ALL DIMENSIONS ARE IN METERS UNLESS OTHERWISE SHOWN

DRAINAGE PLAN

SCALE 1:500

D-11

STATE OF CALIFORNIA - DEPARTMENT OF TRANSPORTATION

Caltrans

HYDRAULICS

FUNCTIONAL SUPERVISOR: RALPH M. SASAKI

CALCULATED-DESIGNED BY: S. M. TAN W. Y. LEE

CHECKED BY: R. M. SASAKI

REVISED BY | DATE REVISED

LAST REVISION 00-00-00 | DATE PLOTTED => 20-APR-2011 | TIME PLOTTED => 12:34

Dist	COUNTY	ROUTE	KILOMETER POST TOTAL PROJECT	SHEET No.	TOTAL SHEETS
07	LA	5	2.9/4.9	192	1082

Ralph M. Sasaki 12-23-09
REGISTERED CIVIL ENGINEER DATE

6-21-10
PLANS APPROVAL DATE

REGISTERED PROFESSIONAL ENGINEER RALPH M. SASAKI No. 30849 Exp. 3/31/10 CIVIL STATE OF CALIFORNIA

THE STATE OF CALIFORNIA OR ITS OFFICERS OR AGENTS SHALL NOT BE RESPONSIBLE FOR THE ACCURACY OR COMPLETENESS OF ELECTRONIC COPIES OF THIS PLAN SHEET.

Caltrans Metric

1

NOTE: THE CONTRACTOR SHALL VERIFY LOCATIONS AND ELEVATIONS OF EXISTING DRAINAGE SYSTEMS BEFORE COMMENCEMENT OF WORK.

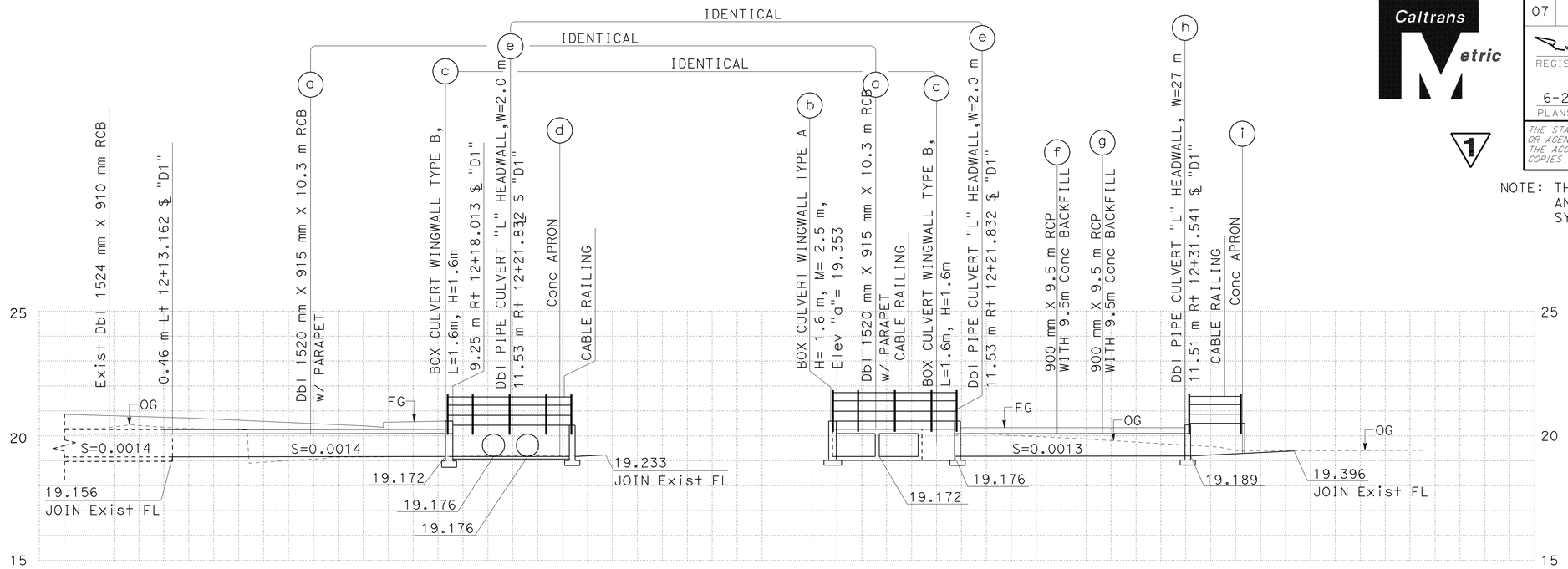

DRAINAGE SYSTEM No. 89

SCALE 1:100 Horiz
1:100 Vert

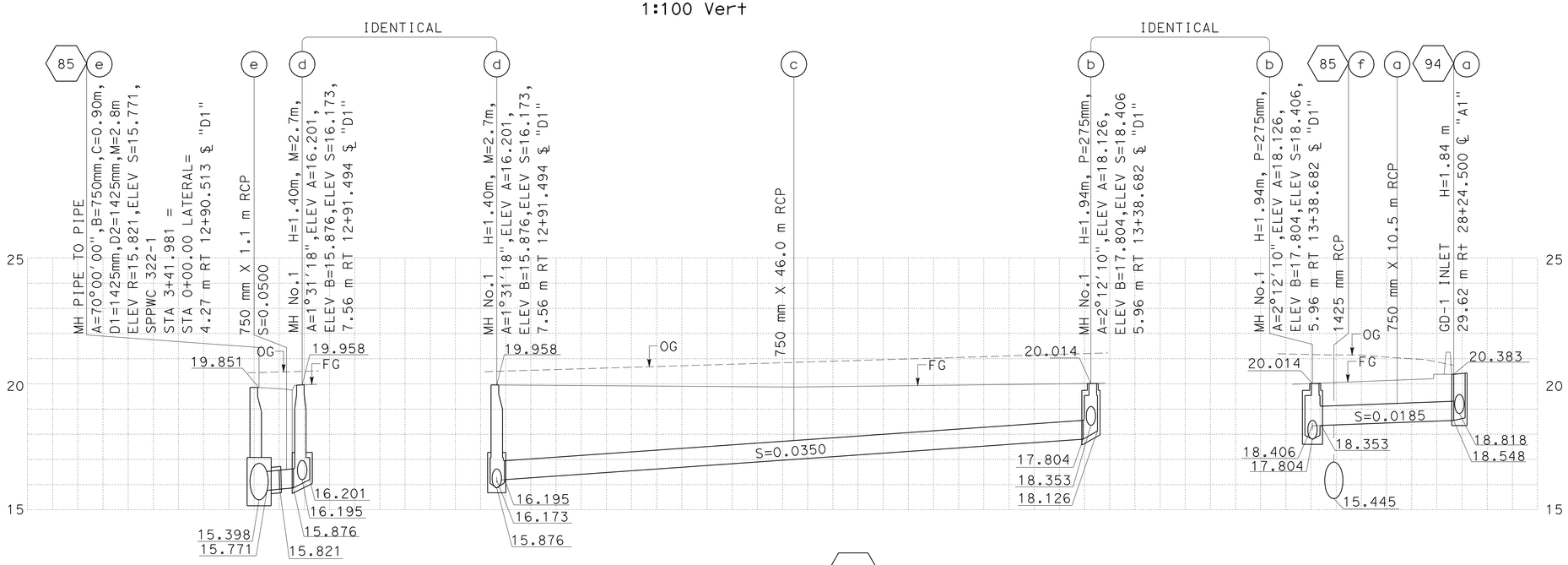

DRAINAGE SYSTEM No. 90

SCALE 1:200 Horiz
1:100 Vert

ALL DIMENSIONS ARE IN METERS UNLESS SHOWN OTHERWISE

DRAINAGE PROFILES

SCALE AS SHOWN

1 REVISED PER ADDENDUM No. 1 DATED APRIL 21, 2011

DP-17

STATE OF CALIFORNIA - DEPARTMENT OF TRANSPORTATION
Caltrans
HYDRAULICS

FUNCTIONAL SUPERVISOR: RALPH M. SASAKI
CALCULATED-DESIGNED BY: S. M. TAN, W. Y. LEE
CHECKED BY: R. M. SASAKI
REVISED BY
DATE REVISED

LAST REVISION 00-00-00
DATE PLOTTED => 20-APR-2011
TIME PLOTTED => 12:36

Dist	COUNTY	ROUTE	KILOMETER POST TOTAL PROJECT	SHEET No.	TOTAL SHEETS
07	LA	5	2.9/4.9	228	1082

REGISTERED CIVIL ENGINEER 12-23-09 DATE

6-21-10
PLANS APPROVAL DATE

REGISTERED PROFESSIONAL ENGINEER RALPH M. SASAKI No. 30849 Exp. 3/31/10 CIVIL STATE OF CALIFORNIA

THE STATE OF CALIFORNIA OR ITS OFFICERS OR AGENTS SHALL NOT BE RESPONSIBLE FOR THE ACCURACY OR COMPLETENESS OF ELECTRONIC COPIES OF THIS PLAN SHEET.

Caltrans Metric

1

NOTES:

1. CONCRETE APRON (@ Dbl BOX CULVERT)-INSIDE CORNER ELEVATION @ WINGWALLS AND HEADWALLS JUNCTION AND AT END OF "L" HEADWALL IS 19.295.
2. FOR INFORMATION AND DETAILS NOT SHOWN, SEE STANDARD PLANS.
3. FOR CABLE RAILING INFORMATION AND DETAILS NOT SHOWN SEE STD PLAN B11-47.
4. CABLE RAILING QUANTITIES TO BE INCLUDED IN ROADWAY QUANTITIES.

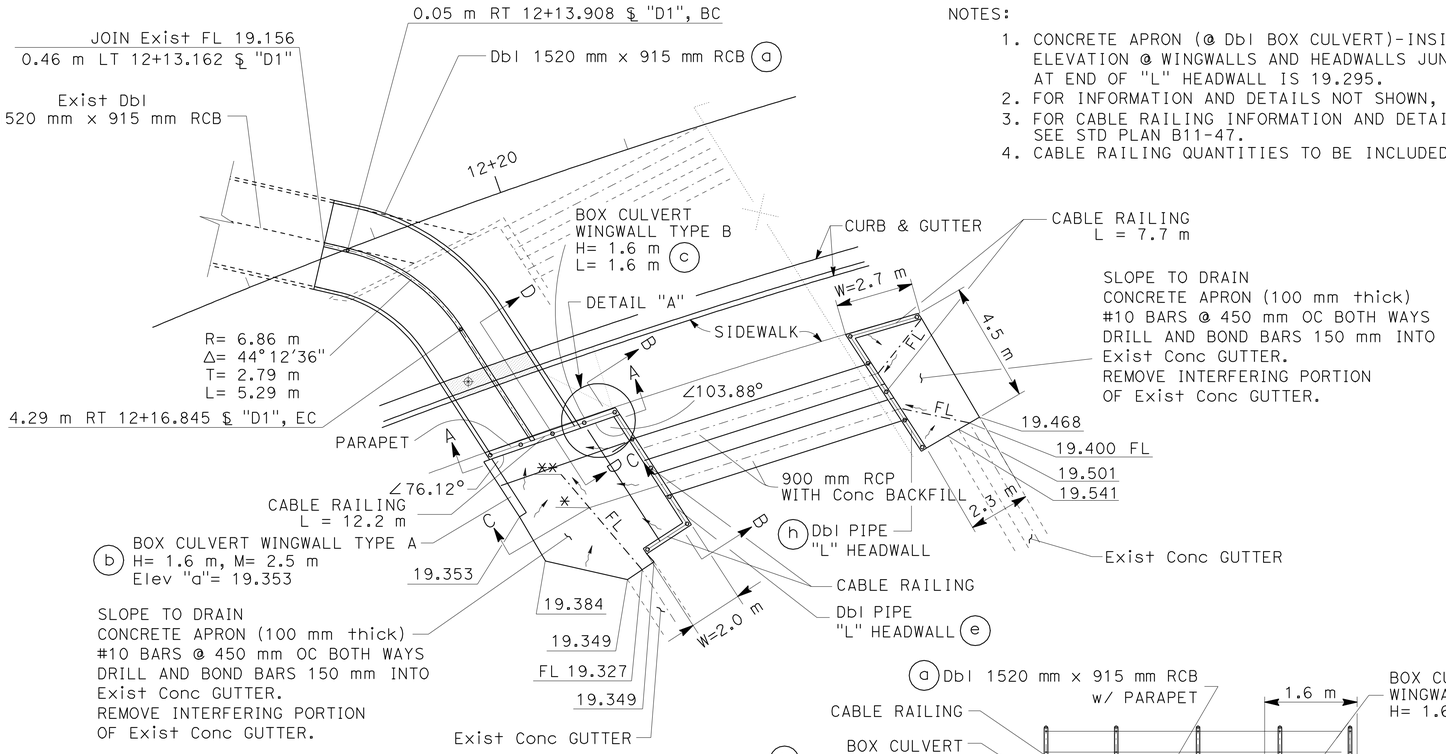

PLAN

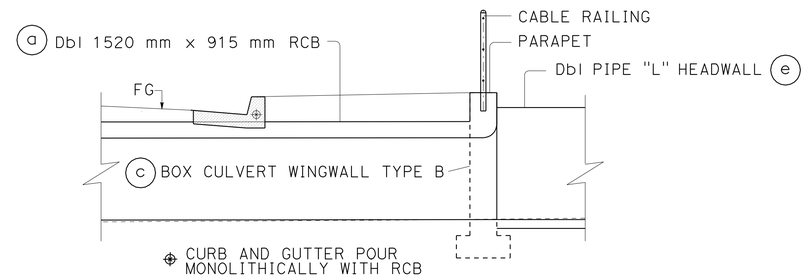

SECTION D-D

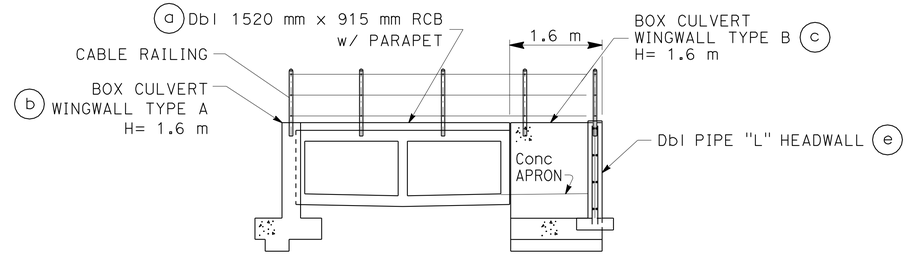

SECTION A-A

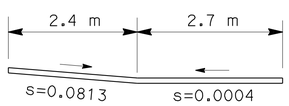

SECTION C-C

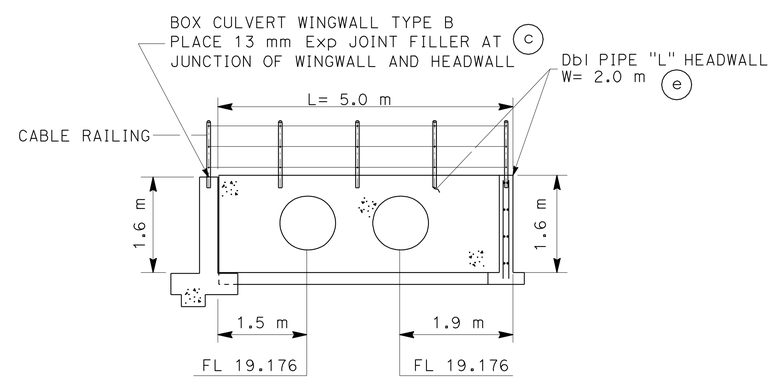

SECTION B-B

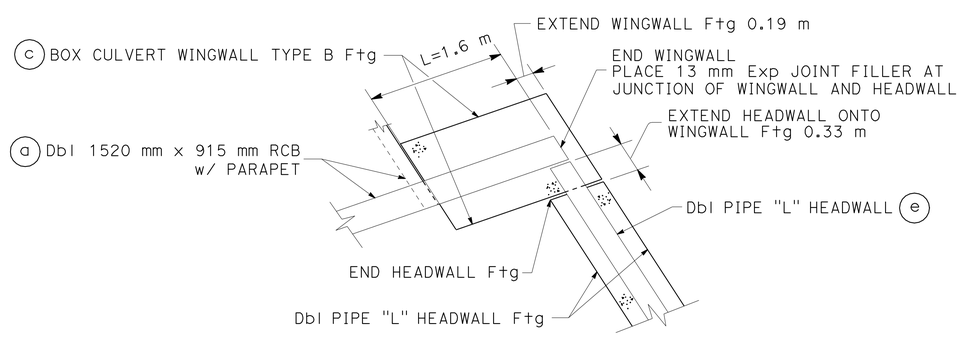

WINGWALL/HEADWALL INTERFACE
DETAIL "A"

Conc APRON @ BOX CULVERT FL ELEVATIONS		
	DISTANCE FROM Exist Conc GUTTER ALONG FL	FL Elev OF APRON
*	3.03 m	19.175
**	4.66 m	19.174

ALL DIMENSIONS ARE IN MILLIMETERS UNLESS SHOWN OTHERWISE

DRAINAGE SYSTEM No. 89

DRAINAGE DETAILS

NO SCALE

DD-15

1 **REVISED PER ADDENDUM No. 1 DATED APRIL 21, 2011**

STATE OF CALIFORNIA - DEPARTMENT OF TRANSPORTATION
Caltrans
HYDRAULICS

FUNCTIONAL SUPERVISOR: RALPH M. SASAKI
CALCULATED-DESIGNED BY: S. M. TAN W. Y. LEE
CHECKED BY: R. M. SASAKI
REVISED BY
DATE REVISED

LAST REVISION 00-00-00
DATE PLOTTED => 20-APR-2011
TIME PLOTTED => 12:36

Dist	COUNTY	ROUTE	KILOMETER POST TOTAL PROJECT	SHEET No.	TOTAL SHEETS
07	LA	5	2.9/4.9	235	1082

Caltrans Metric

1

12-23-09
REGISTERED CIVIL ENGINEER DATE

6-21-10
PLANS APPROVAL DATE

REGISTERED PROFESSIONAL ENGINEER
RALPH M. SASAKI
No. 30849
Exp. 3/31/10
CIVIL
STATE OF CALIFORNIA

THE STATE OF CALIFORNIA OR ITS OFFICERS OR AGENTS SHALL NOT BE RESPONSIBLE FOR THE ACCURACY OR COMPLETENESS OF ELECTRONIC COPIES OF THIS PLAN SHEET.

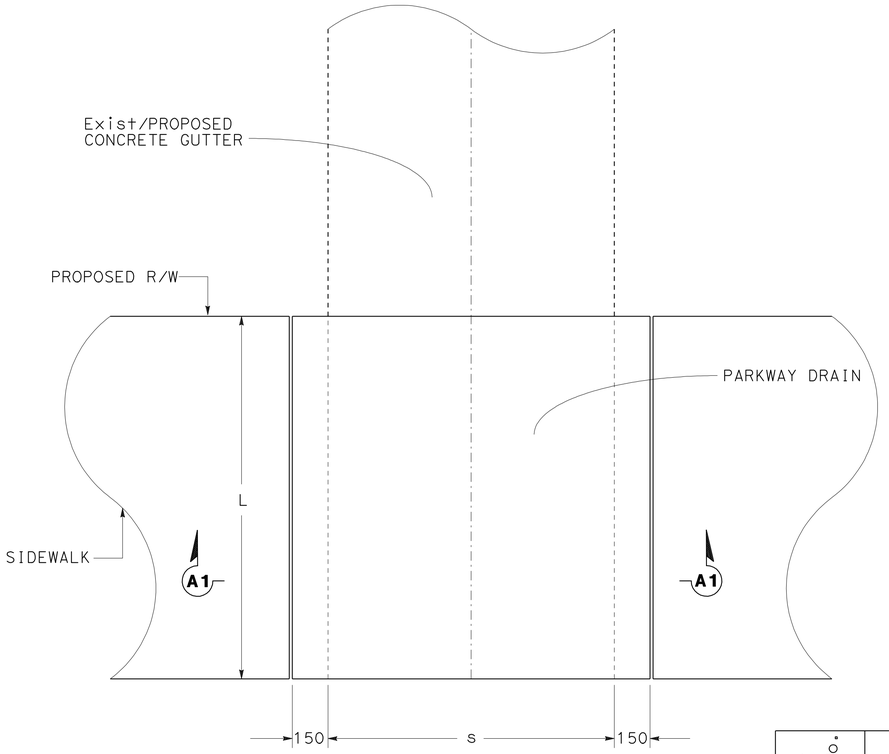

PLAN

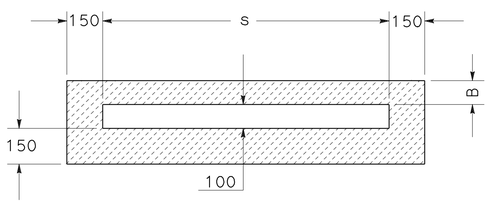

SECTION A1-A1

PARKWAY DRAIN

FOR INFORMATION AND DETAILS NOT SHOWN
SEE SPPWC 151-1

DRAINAGE SYSTEM No.	DRAINAGE UNIT	PARKWAY DRAIN		
		L	s	B
91	a	2.4 m	900	100
97	a	3.4 m	1200	100
98	a	2.4 m	1200	100
99	a	2.4 m	1200	100
102	a	2.4 m	750	100
104	a	2.4 m	1350	100
105	a	2.4 m	1200	100
106	a	2.4 m	1500	100
114	a	2.4 m	1500	100
123	a	2.9 m	900	100
133	a	2.9 m	600	100
136	a	2.0 m	600	100
95	a	3.5 m	600	100
96	a	3.4 m	900	100
137	a	3.4 m	1200	100

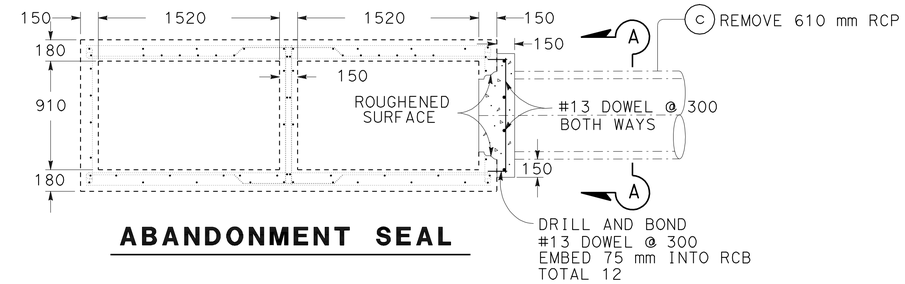

ABANDONMENT SEAL

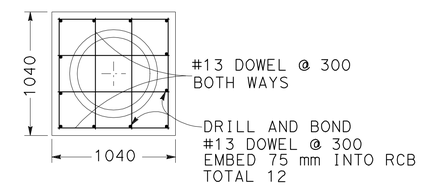

SECTION A-A

DRAINAGE SYSTEM No. 3

ALL DIMENSIONS ARE IN
MILLIMETERS UNLESS SHOWN OTHERWISE

DRAINAGE DETAILS

NO SCALE

DD-22

1 REVISED PER ADDENDUM No. 1 DATED APRIL 21, 2011

STATE OF CALIFORNIA - DEPARTMENT OF TRANSPORTATION
Caltrans
HYDRAULICS

FUNCTIONAL SUPERVISOR
RALPH M. SASAKI

CALCULATED-DESIGNED BY S. M. TAN
W. Y. LEE
CHECKED BY R. M. SASAKI

REVISED BY
DATE REVISED

LAST REVISION 00-00-00
DATE PLOTTED => 20-APR-2011
TIME PLOTTED => 12:56

Dist	COUNTY	ROUTE	KILOMETER POST TOTAL PROJECT	SHEET No.	TOTAL SHEETS
07	LA	5	2.9/4.9	306	1082

REGISTERED CIVIL ENGINEER 12-23-09 DATE

6-21-10
PLANS APPROVAL DATE

REGISTERED PROFESSIONAL ENGINEER RALPH M. SASAKI No. 30849 Exp. 3/31/10 CIVIL STATE OF CALIFORNIA

THE STATE OF CALIFORNIA OR ITS OFFICERS OR AGENTS SHALL NOT BE RESPONSIBLE FOR THE ACCURACY OR COMPLETENESS OF ELECTRONIC COPIES OF THIS PLAN SHEET.

Caltrans Metric

1

NOTES: PIPE JOINTS ARE STANDARD JOINTS.
(N) NOT A SEPARATE PAY ITEM, FOR INFORMATION ONLY.

SUMMARY OF DRAINAGE QUANTITIES

DRAINAGE PLAN	DRAINAGE SYSTEM No. ⬡	DRAINAGE UNIT ◯	"H" OR "V" (N)	MINOR CONCRETE (MINOR STRUCTURE)	MISCELLANEOUS IRON AND STEEL	CLASS 1 CONCRETE (BOX CULVERT)	BAR REINFORCING STEEL (BOX CULVERT)	MINOR CONCRETE (BACKFILL)	MINOR CONCRETE (DITCH LINING)	MINOR CONCRETE (GUTTER LINING)	MINOR CONCRETE (GUTTER DEPRESSION)	450 mm RCP	525 mm RCP	600 mm RCP	750 mm RCP	900 mm RCP	1050 mm RCP	1200 mm RCP	1425 mm RCP	450 mm SCSP (2.01 mm THICK)	150 mm UNPERFORATED PP *	GRATED LINE DRAIN	900 mm PRECAST CONCRETE PIPE MANHOLE	PLACE HMA (MISC AREA) *	HOT MIX ASPHALT *	DITCH EXCAVATION	REMOVE CONCRETE	REMOVE PIPE	REMOVE INLET	REMOVE HEADWALL	REMOVE MANHOLE	ADJUST MANHOLE	CURB DRAIN	600 mm MH FRAME AND COVER (N)	610 mm MH FRAME AND COVER (N)	914 mm MH FRAME AND COVER (N)	CATCH BASIN MH FRAME AND COVER (N)	TYPE 600-12 FRAME AND GRATE (N)	TYPE 600-12X FRAME AND GRATE (N)	FRAME AND GRATING FOR CATCH BASINS (N)	MAXIMUM COVER (N)	DESCRIPTION	STATION
			m	m3	kg	m3	kg	m3	m3	m3	m3	m	m	m	m	m	m	m	m	m	m	m	m	m2	tonne	m3	m3	m	EA	EA	EA	EA	EA	EA	EA	EA	EA	EA	EA	EA	EA	m		
D-10	88	e													1.1																										3.5	750 mm RCP	
D-10	89	a				17.00	1875	10.61																																		2-1520 mm X 915 mm X 10.3 m RCB	
		b	1.60			2.40	60	10.61																																		BOX CULVERT WINGWALL TYPE A	
		c	1.60			1.62	41																																			BOX CULVERT WINGWALL TYPE B	
		d		2.58																																						CONCRETE APRON	
		e		3.06																																						DBL PIPE CULVERT "L" HEADWALL	11.53 m R+ 12+21.832 ℄ "D1"
		f														9.5																									0.2	900 mm RCP	
		g														9.5																									0.2	900 mm RCP	
		h		3.13																																						DBL PIPE CULVERT "L" HEADWALL	11.51 m R+ 12+31.541 ℄ "D1"
		i		1.15																																						CONCRETE APRON	
D-10	90	a													10.5																										1.1	750 mm RCP	
		b	1.94	2.78	200																		0.3											1								MH No. 1	5.96 m R+ 13+38.682 ℄ "D1"
		c													46.0																										3.0	750 mm RCP	
		d	1.40	2.22	200																		2.7											1								MH No. 1	7.56 m R+ 12+91.494 ℄ "D1"
		e													1.1																										3.2	750 mm RCP	
D-10	91	a		0.79																																						PARKWAY DRAIN	6.68 m R+ 12+42.810 ℄ "D1"
D-11	92	a												1.2																											1.8	600 mm RCP	
		b	1.52	5.50	55						1.08																									1					COCB WITH LOCAL DEPRESSIONS CASE E	4.26 m R+ 15+15.542 ℄ "D1"
	93	a													54.0																										0.9	750 mm RCP	
		b	1.52	1.48	264																																2					GD-1 INLET	28.95 m L+ 30+20.000 ℄ "A1"
		c													19.1																										0.7	750 mm RCP	
		d	1.46	1.43	264																																2					GD-1 INLET	28.95 m L+ 30+40.000 ℄ "A1"
		e													99.4																										0.7	750 mm RCP	
		f	1.50	1.46	264																																2					GD-1 INLET	28.95 m L+ 31+40.000 ℄ "A1"
D-11		g													99.1																										0.8	750 mm RCP	
SHEET TOTAL				25.58	1247	21.02	1976	21.22			1.08			1.2	330.3	19.0							3.0											2		1	6					SHEET TOTAL	

* TO BE COMBINED WITH HIGHWAY QUANTITIES

1 REVISED PER ADDENDUM No. 1 DATED APRIL 21, 2011

DRAINAGE QUANTITIES
DQ-15

STATE OF CALIFORNIA - DEPARTMENT OF TRANSPORTATION
Caltrans
HYDRAULICS

FUNCTIONAL SUPERVISOR: RALPH M. SASAKI
CALCULATED-DESIGNED BY: S. M. TAN / W. Y. LEE
CHECKED BY: R. M. SASAKI
REVISED BY
DATE REVISED

LAST REVISION 00-00-00
DATE PLOTTED => 20-APR-2011
TIME PLOTTED => 12:36

NOTES: PIPE JOINTS ARE STANDARD JOINTS.
(N) NOT A SEPARATE PAY ITEM, FOR INFORMATION ONLY.

Caltrans Metric

Dist	COUNTY	ROUTE	KILOMETER POST TOTAL PROJECT	SHEET No.	TOTAL SHEETS
07	LA	5	2.9/4.9	318	1082

REGISTERED CIVIL ENGINEER 12-23-09 DATE
6-21-10
PLANS APPROVAL DATE

REGISTERED PROFESSIONAL ENGINEER RALPH M. SASAKI No. 30849 Exp. 3/31/10 CIVIL STATE OF CALIFORNIA

THE STATE OF CALIFORNIA OR ITS OFFICERS OR AGENTS SHALL NOT BE RESPONSIBLE FOR THE ACCURACY OR COMPLETENESS OF ELECTRONIC COPIES OF THIS PLAN SHEET.

SUMMARY OF DRAINAGE QUANTITIES

DRAINAGE PLAN	DRAINAGE SYSTEM No. ⬡	DRAINAGE UNIT ◯	"H" OR "V" (N)	MINOR CONCRETE (MINOR STRUCTURE)	MISCELLANEOUS IRON AND STEEL	CLASS 1 CONCRETE (BOX CULVERT)	BAR REINFORCING STEEL (BOX CULVERT)	MINOR CONCRETE (BACKFILL)	MINOR CONCRETE (DITCH LINING)	MINOR CONCRETE (GUTTER LINING)	MINOR CONCRETE (GUTTER DEPRESSION)	450 mm RCP	525 mm RCP	600 mm RCP	750 mm RCP	900 mm RCP	1050 mm RCP	1200 mm RCP	1425 mm RCP	450 mm SCSP (2.01 mm THICK)	150 mm UNPERFORATED PP *	GRATED LINE DRAIN	900 mm PRECAST CONCRETE PIPE MANHOLE	PLACE HMA (MISC AREA) *	HOT MIX ASPHALT *	DITCH EXCAVATION	REMOVE CONCRETE	REMOVE PIPE	REMOVE INLET	REMOVE HEADWALL	REMOVE MANHOLE	ADJUST MANHOLE	CURB DRAIN	600 mm MH FRAME AND COVER (N)	610 mm MH FRAME AND COVER (N)	914 mm MH FRAME AND COVER (N)	CATCH BASIN MH FRAME AND COVER (N)	TYPE 600-12 FRAME AND GRATE (N)	TYPE 600-12X FRAME AND GRATE (N)	FRAME AND GRATING FOR CATCH BASINS (N)	MAXIMUM COVER (N)	DESCRIPTION	STATION
			m	m3	kg	m3	kg	m3	m3	m3	m3	m	m	m	m	m	m	m	m	m	m	m	m	m2	tonne	m3	m3	m	EA	EA	EA	EA	EA	EA	EA	EA	EA	EA	EA	EA	EA	m		
D-19	131	a				774.36	146555																																			4270 mm X 762 mm RCB	
		b		0.70	306																														1							MANHOLE-Conc BOX STORM DRAIN	30.06 m L+ 16+33.919 ℄ "B1"
		c		0.21	306																														1							MANHOLE-Conc BOX STORM DRAIN	44.50 m R+ 39+79.436 ℄ "A1"
		d		0.63	306																														1							MANHOLE-Conc BOX STORM DRAIN	43.11 m L+ 39+31.052 ℄ "A1"
		e		0.70	306																														1							MANHOLE-Conc BOX STORM DRAIN	0.59 m R+ 21+12.172 ⅊ "E1"
		f		33.64																																						TRANSITION STRUCTURE No. 1	12.35 m L+ 20+45.580 ⅊ "E1"
		g		0.69																																						WALL PLUG	34.76 m L+ 16+65.000 ℄ "B1"
	132	a	1.05	1.70	55																															1						COCB	50.58 m R+ 40+55.243 ⅊ "C3"
		b												29.6																											0.9	600 mm RCP	
	133	a		0.74																																						PARKWAY DRAIN	14.00 m R+ 18+20.906 ℄ "B1"
	134	a																															1									CURB DRAIN	8.11 m L+ 15+98.116 ⅊ "D2"
	135	a	0.90	0.69	148																																		1			TYPE G1 INLET	20.95 m R+ 17+75.000 ℄ "B1"
		b										3.4																													0.6	450 mm RCP	
		c	1.35	1.37	55						0.48																									1						COCB WITH LOCAL DEPRESSIONS CASE E	16.05 m R+ 17+75.220 ℄ "B1"
		d										30.0																													1.1	450 mm RCP	
		e								0.36																																CONCRETE GUTTER	
D-19	136	a		0.51																																						PARKWAY DRAIN	7.28 m R+ 16+02.300 ℄ "D2"
SHEET TOTAL				41.58	1482	774.36	146555			0.36	0.48	33.4		29.6																			1		4	2		1			SHEET TOTAL	
GRAND TOTAL				298.91	25956	1056.39	169938	370.89	40.17	3.98	10.76	684.3	24.1	2552.0	929.7	53.1	72.2	88.8	234.2	19.1	2.8	93.0	40.4	20.0	3.61	368.9	1110.24	1754.8	36	24	8	3	5	14	18	4	17	100	6	8		TOTAL	

* TO BE COMBINED WITH HIGHWAY QUANTITIES

1 REVISED PER ADDENDUM No. 1 DATED APRIL 21, 2011

DRAINAGE QUANTITIES
DQ-27

STATE OF CALIFORNIA - DEPARTMENT OF TRANSPORTATION
Caltrans HYDRAULICS

CALCULATED-DESIGNED BY S. M. TAN W. Y. LEE
CHECKED BY R. M. SASAKI
FUNCTIONAL SUPERVISOR RALPH M. SASAKI
REVISED BY
DATE REVISED

LAST REVISION 00-00-00
DATE PLOTTED => 20-APR-2011
TIME PLOTTED => 12:36

Dist	COUNTY	ROUTE	KILOMETER POST TOTAL PROJECT	SHEET No.	TOTAL SHEETS
07	LA	5	2.9/4.9	340	1082

REGISTERED CIVIL ENGINEER 12-23-09 DATE

6-21-10
PLANS APPROVAL DATE

REGISTERED PROFESSIONAL ENGINEER NGIM NANCY PE No. 58161 Exp. 6-30-10 CIVIL STATE OF CALIFORNIA

THE STATE OF CALIFORNIA OR ITS OFFICERS OR AGENTS SHALL NOT BE RESPONSIBLE FOR THE ACCURACY OR COMPLETENESS OF ELECTRONIC COPIES OF THIS PLAN SHEET.

Caltrans Metric

1

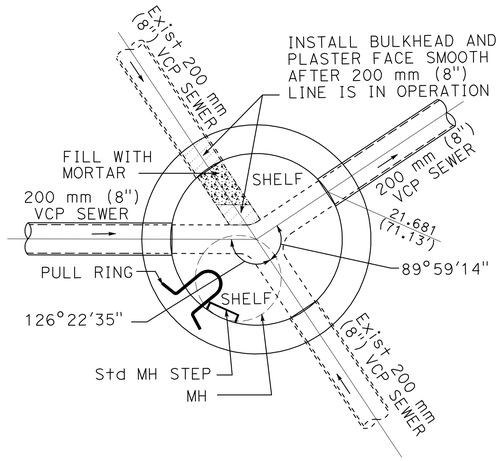

1220 mm (48") Dia MH SSMH-36
"D3" Sta 14+21.30, 22.7 Rt
Sta 23+38.51
(SHEET SS-9)

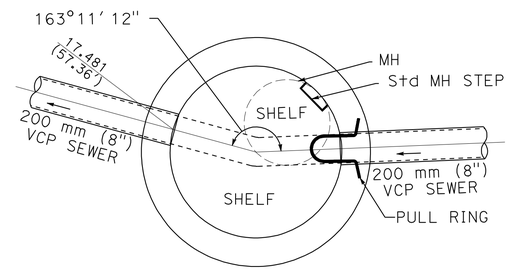

1220 mm (48") Dia MH SSMH-44
"E1" Sta 11+42.50, 3.9 Lt
Sta 10+42.67
(SHEET SS-11)

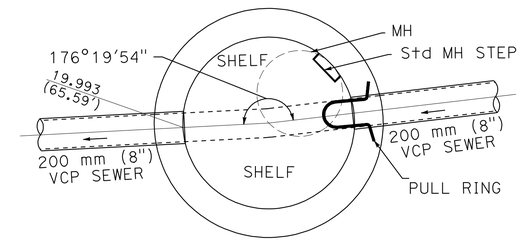

1220 mm (48") Dia MH SSMH-50
"E1" Sta 17+32.0, 3.8 Lt
Sta 16+30.58
(SHEET SS-12)

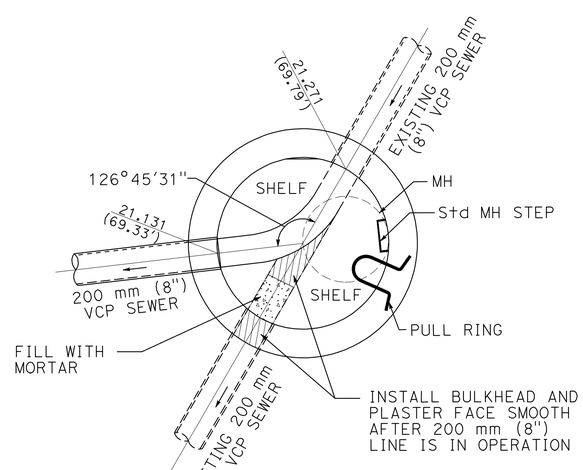

1220 mm (48") Dia MH SSMH-52
"E1" Sta 19+29.5, 2.8 Lt
Sta 18+27.89
(SHEET SS-13)

1 **REVISED PER ADDENDUM No. 1 DATED APRIL 21, 2011**

ALL DIMENSIONS ARE IN METERS
UNLESS OTHERWISE SHOWN

SANITARY SEWER DETAILS
CITY OF SANTA FE SPRINGS
NO SCALE

SSD-4

	REVISED BY	DATE REVISED
YTT	YTT	RK
10/09	04/09	02/08

YIM T. TSE
NGIM NANCY PE

CALCULATED-DESIGNED BY
CHECKED BY

FUNCTIONAL SUPERVISOR
NGIM NANCY PE

STATE OF CALIFORNIA - DEPARTMENT OF TRANSPORTATION
Caltrans OFFICE OF DESIGN A

72159cjc004.add

LAST REVISION 00-00-00
DATE PLOTTED => 20-APR-2011
TIME PLOTTED => 12:36

Dist	COUNTY	ROUTE	KILOMETER POST TOTAL PROJECT	SHEET No.	TOTAL SHEETS
07	LA	5	2.9/4.9	387	1082

REGISTERED CIVIL ENGINEER 12-23-09 DATE

6-21-10
PLANS APPROVAL DATE

REGISTERED PROFESSIONAL ENGINEER HAYKAZ AGHAJANIAN No. C53866 Exp. 12-31-11 CIVIL STATE OF CALIFORNIA

THE STATE OF CALIFORNIA OR ITS OFFICERS OR AGENTS SHALL NOT BE RESPONSIBLE FOR THE ACCURACY OR COMPLETENESS OF ELECTRONIC COPIES OF THIS PLAN SHEET.

Caltrans Metric

1

NOTES:

1. FOR ACCURATE RIGHT OF WAY DATA, CONTACT RIGHT OF WAY ENGINEERING AT THE DISTRICT OFFICE.
2. LOCATION OF UTILITY FACILITIES SHOWN ON THE THESE PLANS ARE APPROXIMATE AND SHALL BE VERIFIED BY THE CONTRACTOR PRIOR TO CONSTRUCTION.
3. FOR POTHOLING INFORMATION, REFER TO SHEETS U-14 AND U-15.
4. FOR RELOCATION PLANS OF UTILITIES, REFER TO PLANS U-17 THRU U-28.
5. UTILITY OWNERSHIP ON THIS PROJECT:
   - ELECTRIC - SOUTHERN CALIFORNIA EDISON (SCE)
   - FIBER OPTICS - ABOVE NET, QWEST, SPRINT, TIME WARNER (TW), LEVEL 3 COMMUNICATIONS, CHARTER COMMUNICATION (CCTV)
   - GAS - SOUTHERN CALIFORNIA GAS COMPANY (SCG)
   - OIL - CHEVRON OIL COMPANY, KINDER MORGAN (KM), STANDARD OIL COMPANY (STD), WILSHIRE OIL COMPANY (WOC), PLAINS ALL AMERICAN (PAALP), UNITED PARADYNE (UP)
   - SEWER - SANITATION DISTRICTS OF LOS ANGELES COUNTY (LACSD), CITY OF SANTA FE SPRINGS (CSFS), CITY OF NORWALK (CN)
   - TELEPHONE - VERIZON TELEPHONE COMPANY (Vzn)
   - WATER - CITY OF SANTA FE SPRINGS (CSFS), CENTRAL BASIN METROPOLITAN WATER DISTRICT (CBMWD), PARK WATER COMPANY (PW), CITY OF NORWALK (CN)

LEGEND:

(XXX) - POTHOLE LOCATION

ABBREVIATIONS:

ABS -	ACRYLONITRILE BUTADIENE STYRENE
ACD -	ASPHALT CEMENT DUCT
Asb -	ASBESTOS
Bu Ca -	BURIED CABLE
CF -	CURB FACE
Comm -	COMMUNICATION
Csg -	CASING
DIP -	DUCTILE IRON PIPE
EW-	EAST OF WEST
F/O -	FIBER OPTIC
ga -	GAGE
GIP -	GALVANIZED IRON PIPE
GP -	GUY POLE
HP -	HIGH PRESSURE
M -	MEDIUM
MFN -	MICRO FIBER NETWORK
Nat Gaso -	NATURAL GASOLINE
NS -	NORTH OF SOUTH
PM -	PLASTIC MEDIUM
San Swr -	SANITARY SEWER
Stl -	STEEL
Trans P -	TRANSMISSION POLE
UB -	UTILITY BOX
UG -	UNDER GROUND
SN -	SOUTH OF NORTH
SS -	SOUTH OF SOUTH
WE -	WEST OF EAST
Wtr -	WATER
WW -	WALL TO WALL

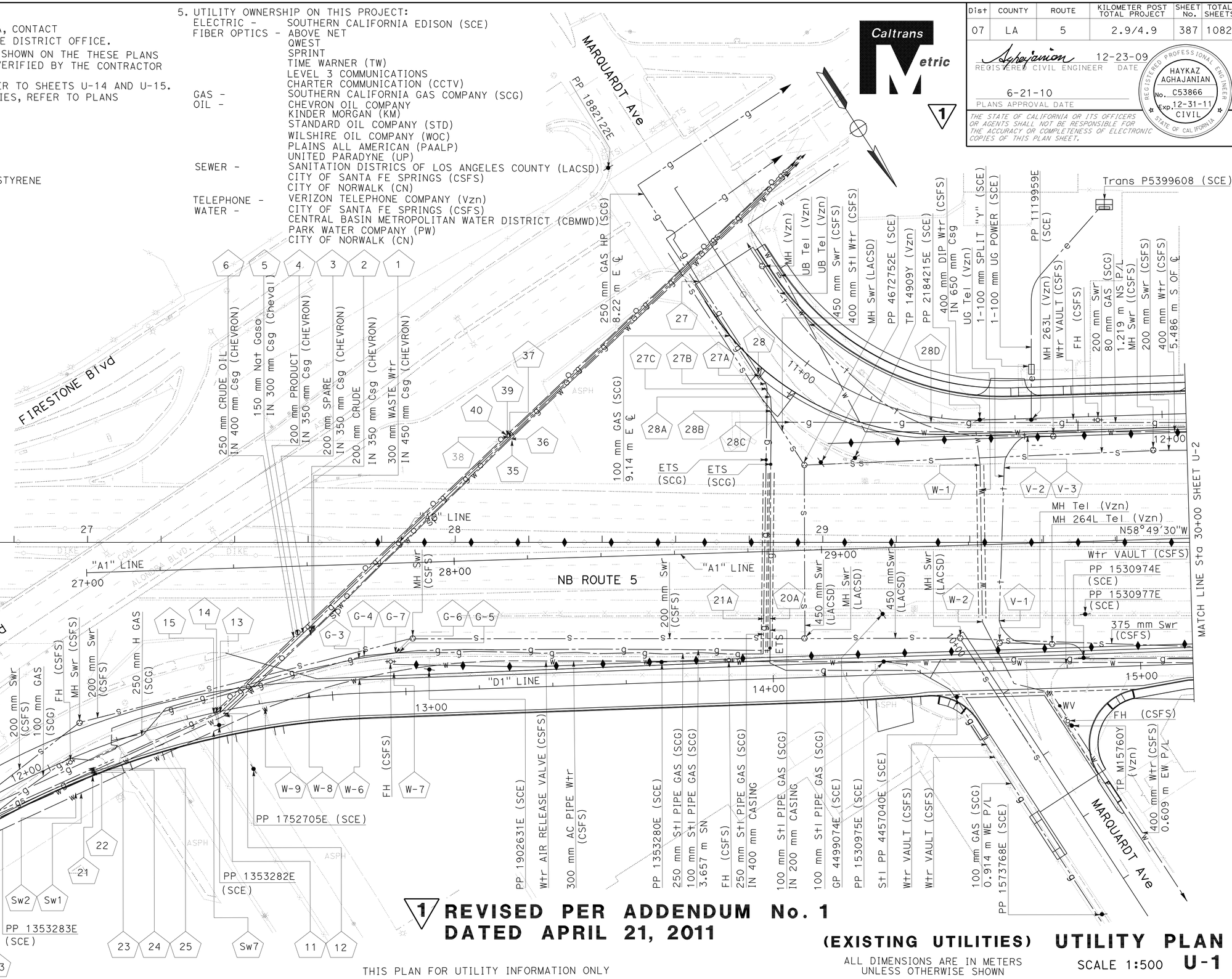

1 REVISED PER ADDENDUM No. 1 DATED APRIL 21, 2011

THIS PLAN FOR UTILITY INFORMATION ONLY

(EXISTING UTILITIES) UTILITY PLAN

ALL DIMENSIONS ARE IN METERS UNLESS OTHERWISE SHOWN

SCALE 1:500 U-1

KN	9/09	HAYKAZ AGHAJANIAN
REVISED BY	DATE REVISED	NGIM NANCY PE
CALCULATED-DESIGNED BY	CHECKED BY	
FUNCTIONAL SUPERVISOR	HAYKAZ AGHAJANIAN	

STATE OF CALIFORNIA - DEPARTMENT OF TRANSPORTATION
Caltrans OFFICE OF DESIGN A

72159cka001.add

LAST REVISION 00-00-00 DATE PLOTTED => 20-APR-2011 TIME PLOTTED => 12:36

NOTE:

1. FOR ACCURATE RIGHT OF WAY DATA, CONTACT RIGHT OF WAY ENGINEERING AT THE DISTRICT OFFICE.
2. REFER TO NOTES 1, 2, 3 AND 4 FROM UTILITY PLAN U-1.

Dist	COUNTY	ROUTE	KILOMETER POST TOTAL PROJECT	SHEET No.	TOTAL SHEETS
07	LA	5	2.9/4.9	388	1082

REGISTERED CIVIL ENGINEER — DATE 12-23-09

6-21-10
PLANS APPROVAL DATE

REGISTERED PROFESSIONAL ENGINEER HAYKAZ AGHAJANIAN No. C53866 Exp. 12-31-11 CIVIL STATE OF CALIFORNIA

THE STATE OF CALIFORNIA OR ITS OFFICERS OR AGENTS SHALL NOT BE RESPONSIBLE FOR THE ACCURACY OR COMPLETENESS OF ELECTRONIC COPIES OF THIS PLAN SHEET.

Caltrans Metric

1

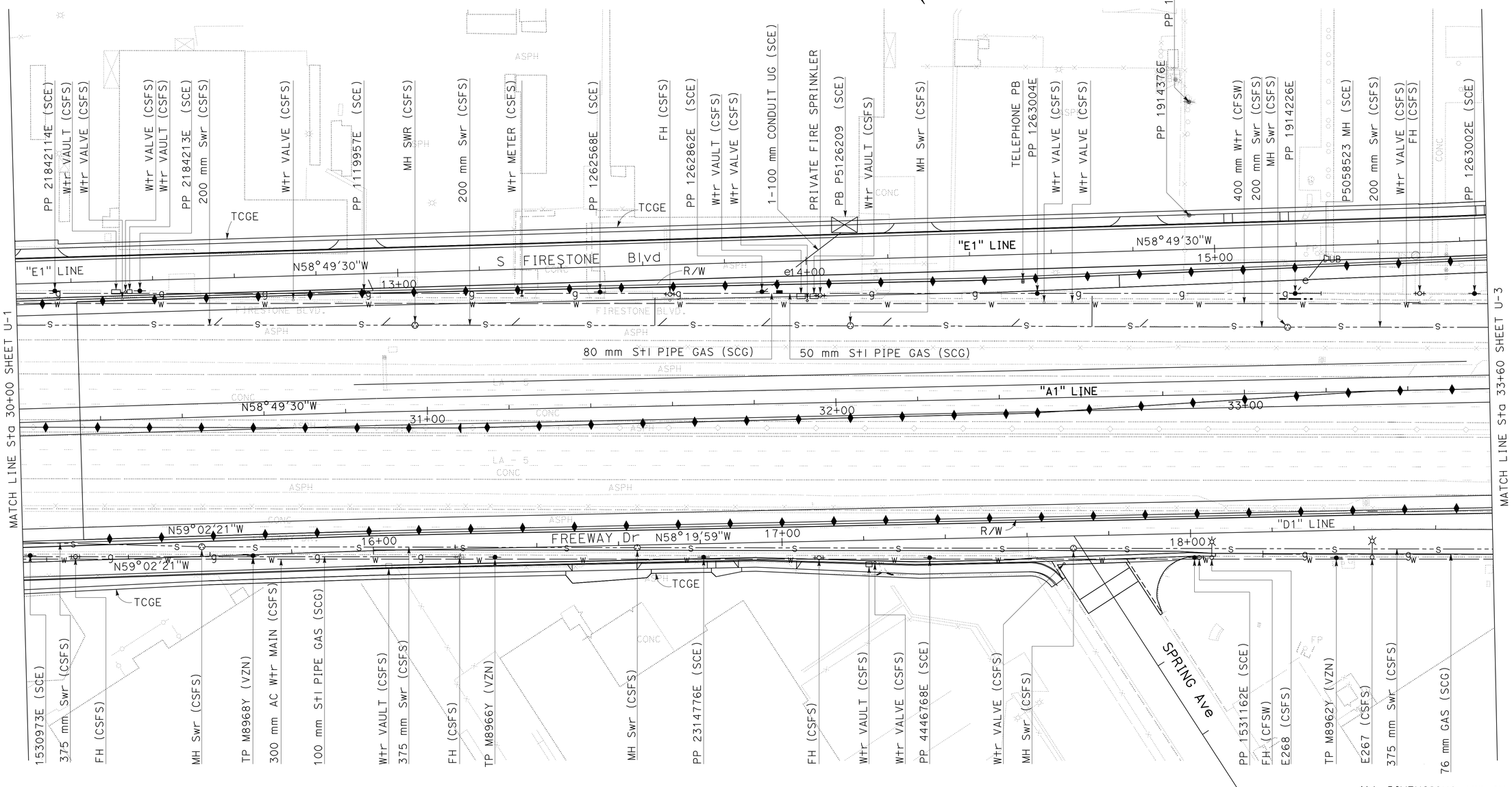

ALL DIMENSIONS ARE IN METERS UNLESS OTHERWISE SHOWN

UTILITY PLAN
(EXISTING UTILITIES)

SCALE 1:500

U-2

1 REVISED PER ADDENDUM No. 1 DATED APRIL 21, 2011

THIS PLAN FOR UTILITY INFORMATION ONLY

STATE OF CALIFORNIA - DEPARTMENT OF TRANSPORTATION
Caltrans OFFICE OF DESIGN A

FUNCTIONAL SUPERVISOR: HAYKAZ AGHAJANIAN
CALCULATED-DESIGNED BY: HAYKAZ AGHAJANIAN
CHECKED BY: NGIM NANCY PE
REVISED BY / DATE REVISED

LAST REVISION 00-00-00
DATE PLOTTED => 20-APR-2011
TIME PLOTTED => 12:56

Dist	COUNTY	ROUTE	KILOMETER POST TOTAL PROJECT	SHEET No.	TOTAL SHEETS
07	LA	5	2.9/4.9	390	1082

REGISTERED CIVIL ENGINEER 12-23-09 DATE

6-21-10
PLANS APPROVAL DATE

REGISTERED PROFESSIONAL ENGINEER HAYKAZ AGHAJANIAN No. C53866 Exp. 12-31-11 CIVIL STATE OF CALIFORNIA

THE STATE OF CALIFORNIA OR ITS OFFICERS OR AGENTS SHALL NOT BE RESPONSIBLE FOR THE ACCURACY OR COMPLETENESS OF ELECTRONIC COPIES OF THIS PLAN SHEET.

Caltrans Metric

1

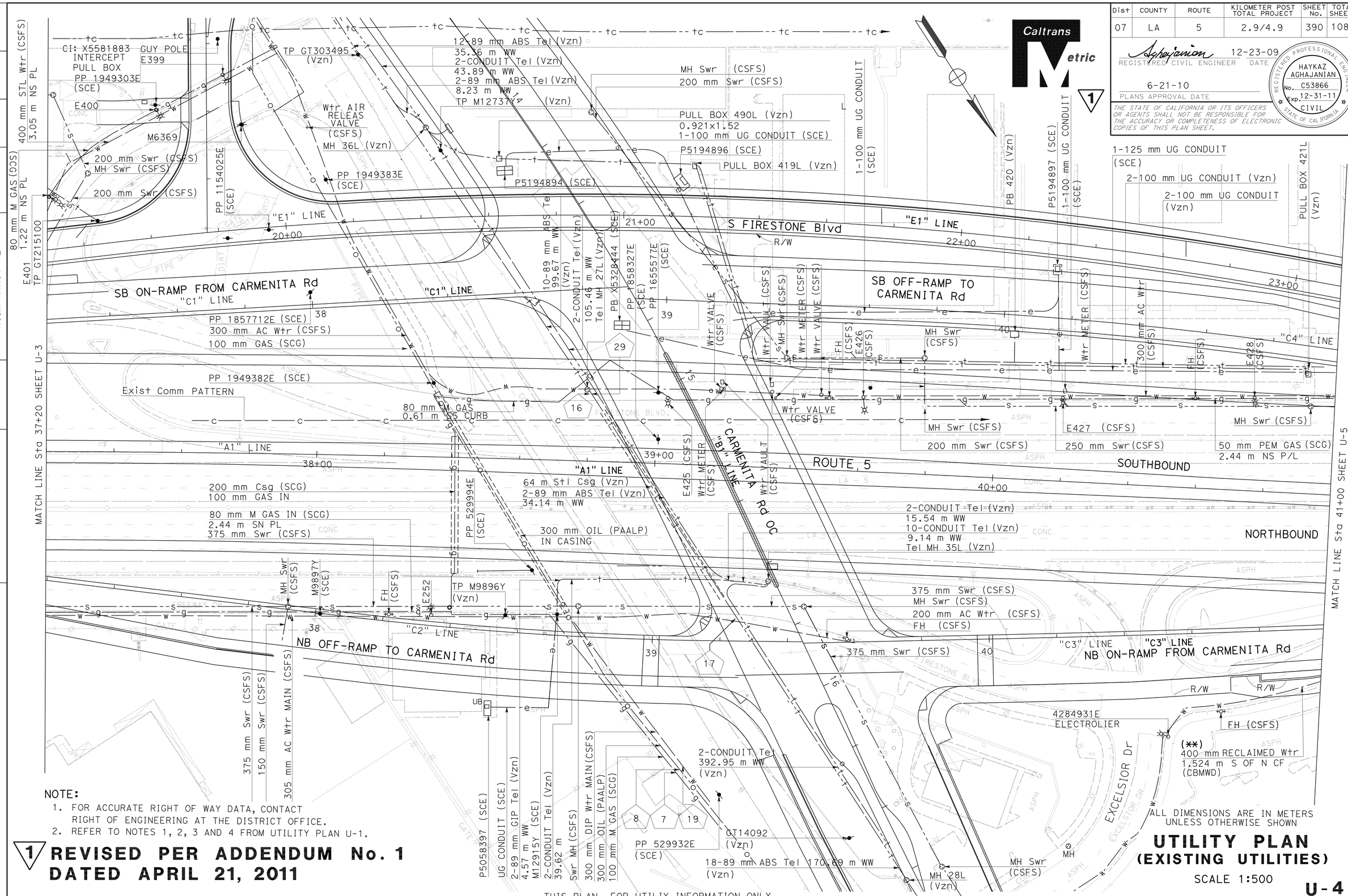

NOTE:

1. FOR ACCURATE RIGHT OF WAY DATA, CONTACT RIGHT OF ENGINEERING AT THE DISTRICT OFFICE.
2. REFER TO NOTES 1, 2, 3 AND 4 FROM UTILITY PLAN U-1.

1 **REVISED PER ADDENDUM No. 1 DATED APRIL 21, 2011**

ALL DIMENSIONS ARE IN METERS UNLESS OTHERWISE SHOWN

UTILITY PLAN (EXISTING UTILITIES)

SCALE 1:500

U-4

THIS PLAN FOR UTILIY INFORMATION ONLY

STATE OF CALIFORNIA - DEPARTMENT OF TRANSPORTATION
Caltrans OFFICE OF DESIGN A

FUNCTIONAL SUPERVISOR: HAYKAZ AGHAJANIAN
CALCULATED-DESIGNED BY: HAYKAZ AGHAJANIAN
CHECKED BY: NGIM NANCY PE
REVISED BY / DATE REVISED

LAST REVISION 00-00-00 | DATE PLOTTED => 20-APR-2011 | TIME PLOTTED => 1:36

Dist	COUNTY	ROUTE	KILOMETER POST TOTAL PROJECT	SHEET No.	TOTAL SHEETS
07	LA	5	2.9/4.9	392	1082

REGISTERED CIVIL ENGINEER 12-23-09 DATE

6-21-10
PLANS APPROVAL DATE

REGISTERED PROFESSIONAL ENGINEER HAYKAZ AGHAJANIAN No. C53866 Exp. 12-31-11 CIVIL STATE OF CALIFORNIA

THE STATE OF CALIFORNIA OR ITS OFFICERS OR AGENTS SHALL NOT BE RESPONSIBLE FOR THE ACCURACY OR COMPLETENESS OF ELECTRONIC COPIES OF THIS PLAN SHEET.

Caltrans Metric

NOTES:

1. FOR ACCURATE RIGHT OF WAY DATA, CONTACT RIGHT OF WAY ENGINEERING AT THE DISTRICT OFFICE.
2. REFER TO NOTES 1, 2, 3, AND 4 FROM UTILITY PLAN U-1.

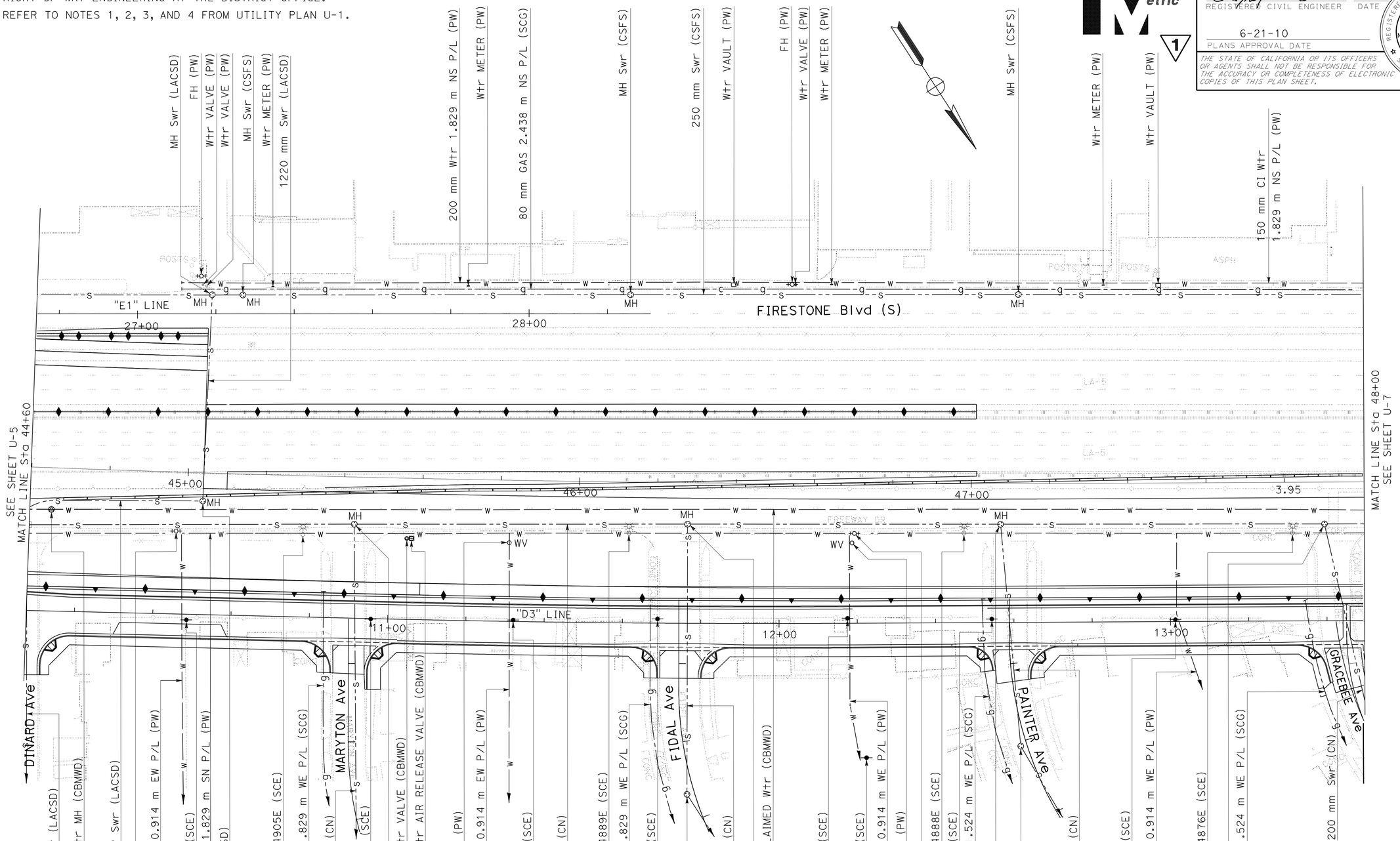

ALL DIMENSIONS ARE IN METERS UNLESS OTHERWISE SHOWN

UTILITY PLAN (EXISTING UTILITIES)

SCALE 1:500

1 REVISED PER ADDENDUM No. 1 DATED APRIL 21, 2011

THIS PLAN FOR UTILITY INFORMATION ONLY

U-6

CALCULATED-DESIGNED BY	HAYKAZ AGHAJANIAN
CHECKED BY	NGIM NANCY PE
REVISED BY	
DATE REVISED	

FUNCTIONAL SUPERVISOR: HAYKAZ AGHAJANIAN

STATE OF CALIFORNIA - DEPARTMENT OF TRANSPORTATION
Caltrans OFFICE OF DESIGN A

72159cka006.add

LAST REVISION 00-00-00 | DATE PLOTTED => 20-APR-2011 | TIME PLOTTED => 12:37

Dist	COUNTY	ROUTE	KILOMETER POST TOTAL PROJECT	SHEET No.	TOTAL SHEETS
07	LA	5	2.9/4.9	393	1082

REGISTERED CIVIL ENGINEER 12-23-09 DATE

6-21-10
PLANS APPROVAL DATE

REGISTERED PROFESSIONAL ENGINEER HAYKAZ AGHAJANIAN No. C53866 Exp. 12-31-11 CIVIL STATE OF CALIFORNIA

THE STATE OF CALIFORNIA OR ITS OFFICERS OR AGENTS SHALL NOT BE RESPONSIBLE FOR THE ACCURACY OR COMPLETENESS OF ELECTRONIC COPIES OF THIS PLAN SHEET.

Caltrans Metric

1

NOTES:

1. FOR ACCURATE RIGHT OF WAY DATA, CONTACT RIGHT OF WAY ENGINEERING AT THE DISTRICT OFFICE.
2. REFER TO NOTES 1, 2, 3, AND 4 FROM UTILITY PLAN U-1.

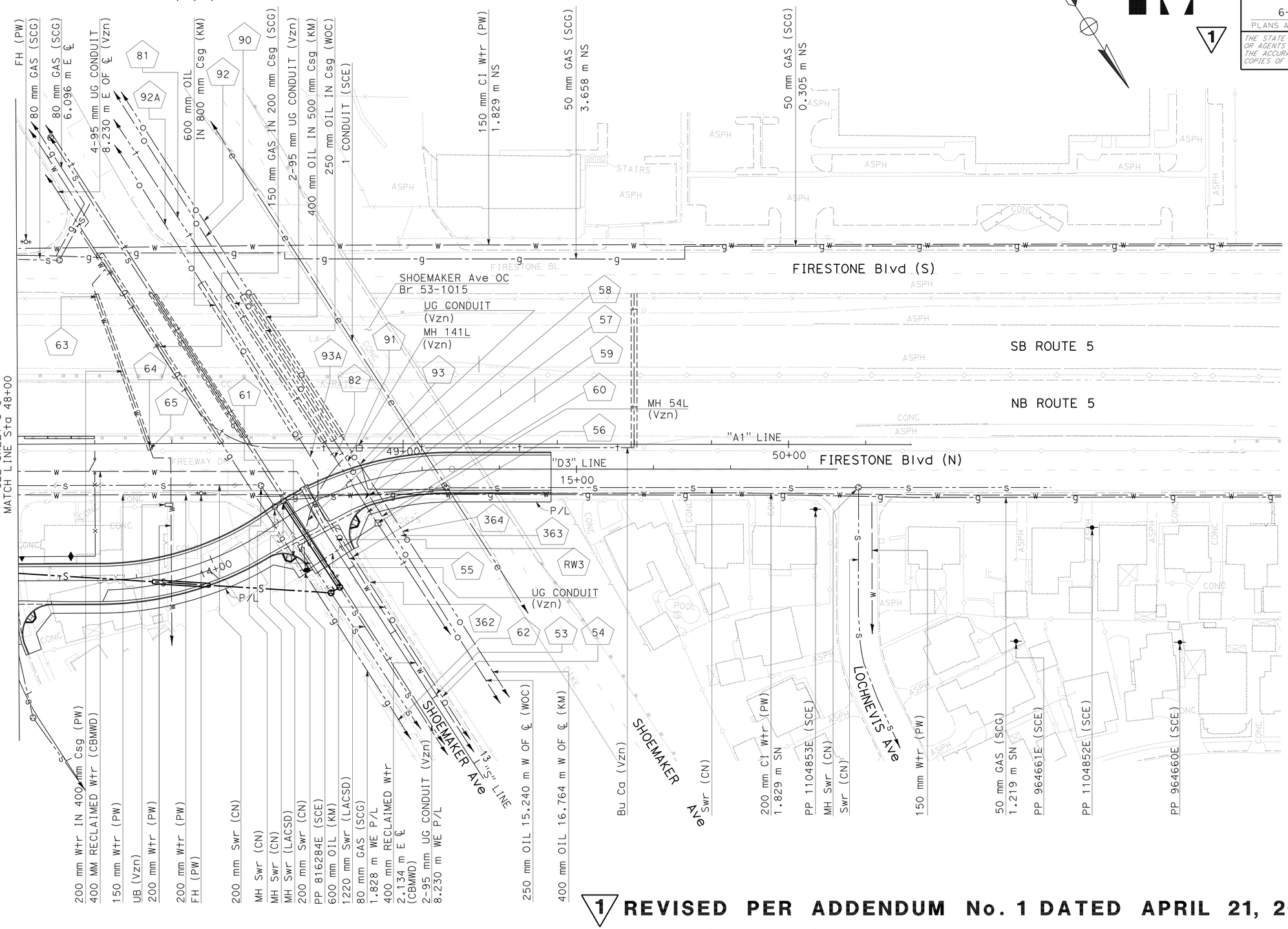

ALL DIMENSIONS ARE IN METERS UNLESS OTHERWISE SHOWN

UTILITY PLAN
(EXISTING UTILITIES)

SCALE 1:500

U-7

1 **REVISED PER ADDENDUM No. 1 DATED APRIL 21, 2011**

THIS PLAN FOR UTILITY INFORMATION ONLY

STATE OF CALIFORNIA - DEPARTMENT OF TRANSPORTATION
Caltrans OFFICE OF DESIGN A

FUNCTIONAL SUPERVISOR: HAYKAZ AGHAJANIAN
CALCULATED-DESIGNED BY: HAYKAZ AGHAJANIAN
CHECKED BY: NGIM NANCY PE
REVISED BY / DATE REVISED

LAST REVISION 00-00-00
DATE PLOTTED => 20-APR-2011
TIME PLOTTED => 12:37

72159cka007.add

NOTE:

1. FOR ACCURATE RIGHT OF WAY DATA, CONTACT RIGHT OF WAY ENGINEERING AT THE DISTRICT OFFICE.
2. REFER TO NOTES 1, 2, 3 AND 4 FROM UTILITY PLAN U-1.

Dist	COUNTY	ROUTE	KILOMETER POST TOTAL PROJECT	SHEET No.	TOTAL SHEETS
07	LA	5	2.9/4.9	394	1082

REGISTERED CIVIL ENGINEER 12-23-09 DATE

6-21-10
PLANS APPROVAL DATE

REGISTERED PROFESSIONAL ENGINEER HAYKAZ AGHAJANIAN No. C53866 Exp. 12-31-11 CIVIL STATE OF CALIFORNIA

THE STATE OF CALIFORNIA OR ITS OFFICERS OR AGENTS SHALL NOT BE RESPONSIBLE FOR THE ACCURACY OR COMPLETENESS OF ELECTRONIC COPIES OF THIS PLAN SHEET.

Caltrans Metric

1

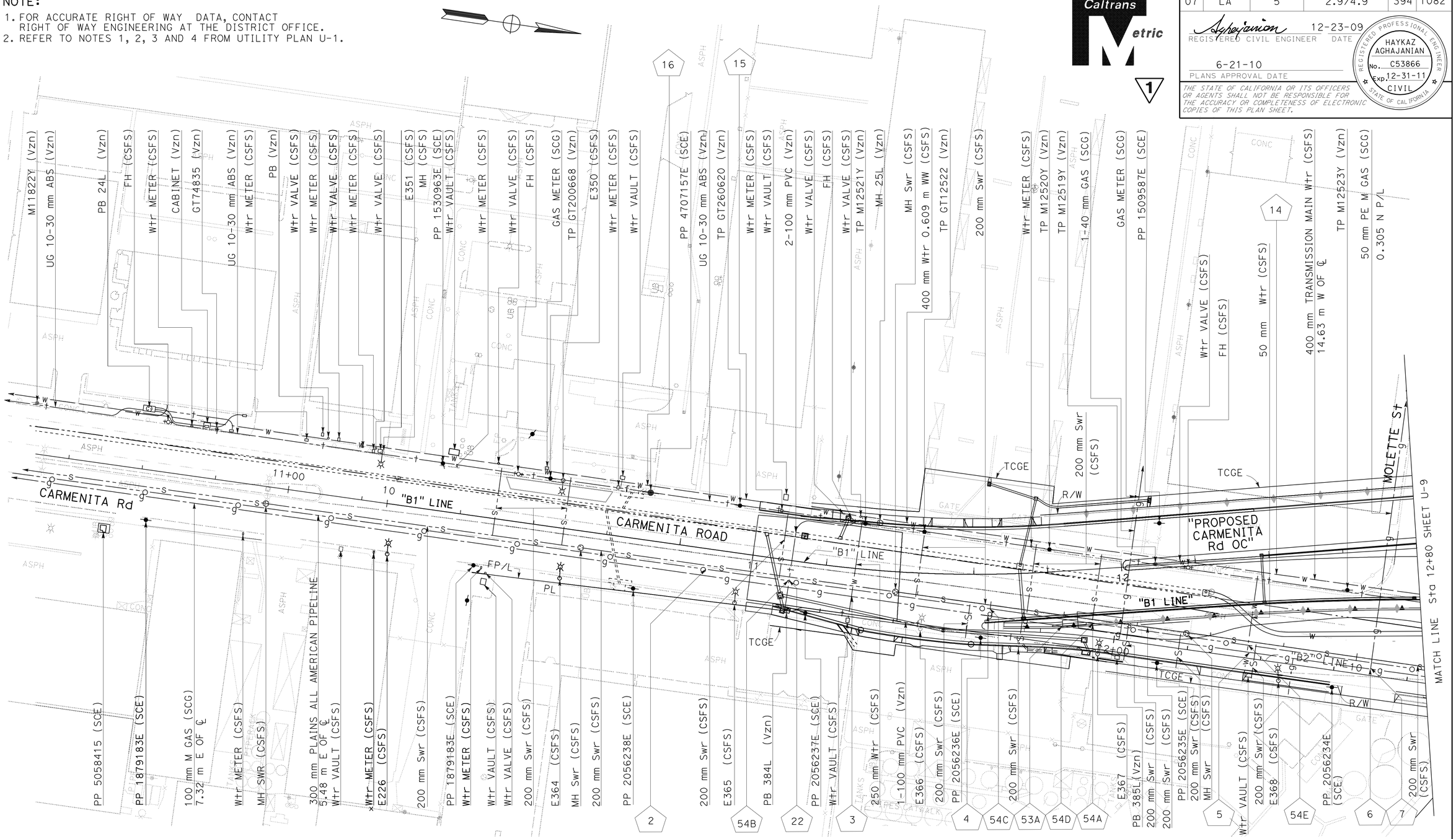

ALL DIMENSIONS ARE IN METERS UNLESS OTHERWISE SHOWN

UTILITY PLAN
(EXISTING UTILITIES)

SCALE 1:500 **U-8**

1 **REVISED PER ADDENDUM No. 1 DATED APRIL 21, 2011**

THIS PLAN FOR UTILITY INFORMATION ONLY

CALCULATED-DESIGNED BY	HAYKAZ AGHAJANIAN	REVISED BY	KN
CHECKED BY	NGIM NANCY PE	DATE REVISED	9/09
FUNCTIONAL SUPERVISOR	HAYKAZ AGHAJANIAN		

STATE OF CALIFORNIA - DEPARTMENT OF TRANSPORTATION
Caltrans OFFICE OF DESIGN A

LAST REVISION DATE PLOTTED => 20-APR-2011
00-00-00 TIME PLOTTED => 12:37

72159cka008.add

Dist	COUNTY	ROUTE	KILOMETER POST TOTAL PROJECT	SHEET No.	TOTAL SHEETS
07	LA	5	2.9/4.9	395	1082

REGISTERED CIVIL ENGINEER 12-23-09 DATE

6-21-10
PLANS APPROVAL DATE

REGISTERED PROFESSIONAL ENGINEER HAYKAZ AGHAJANIAN No. C53866 Exp. 12-31-11 CIVIL STATE OF CALIFORNIA

THE STATE OF CALIFORNIA OR ITS OFFICERS OR AGENTS SHALL NOT BE RESPONSIBLE FOR THE ACCURACY OR COMPLETENESS OF ELECTRONIC COPIES OF THIS PLAN SHEET.

Caltrans Metric 1

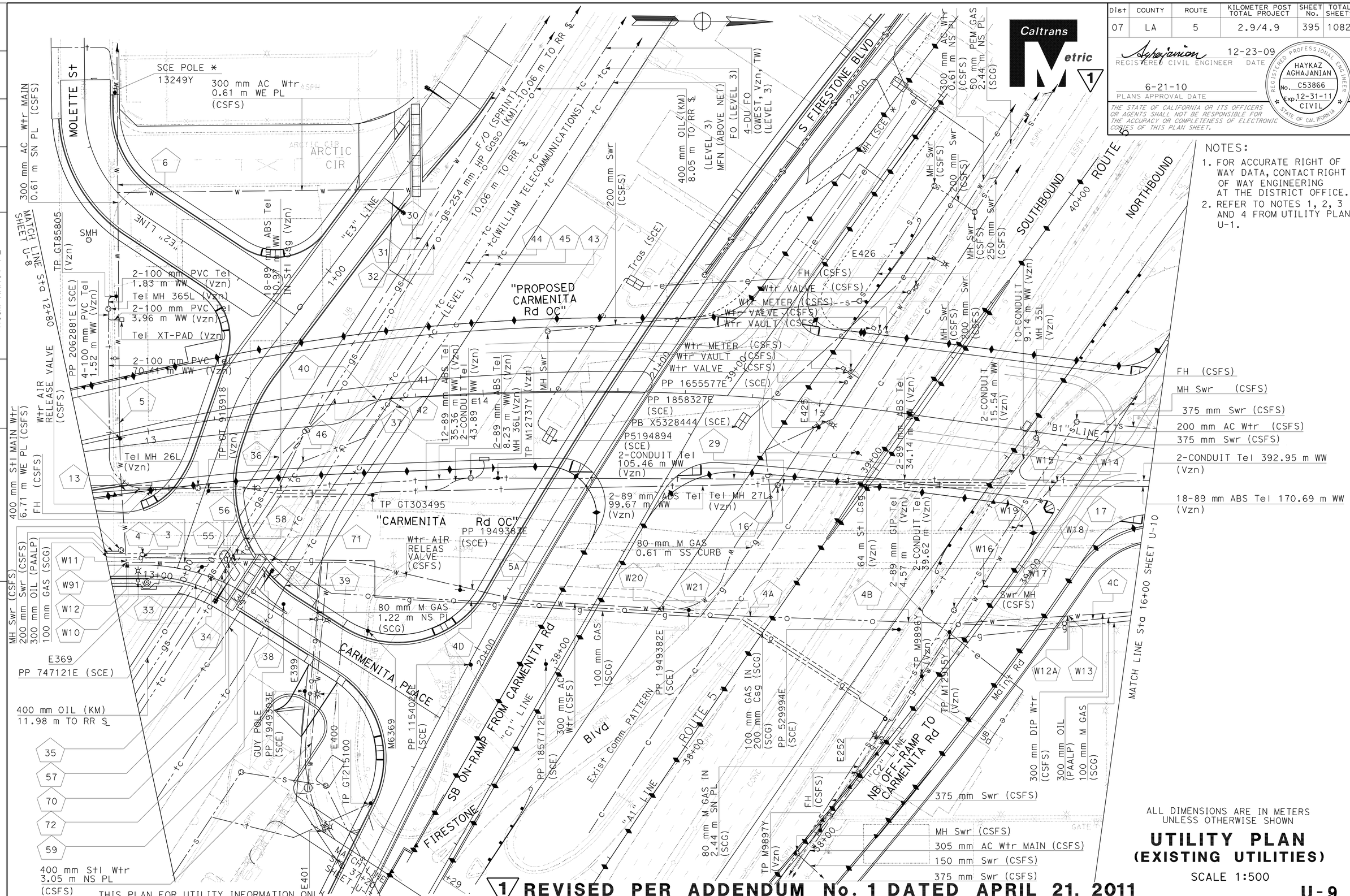

NOTES:

1. FOR ACCURATE RIGHT OF WAY DATA, CONTACT RIGHT OF WAY ENGINEERING AT THE DISTRICT OFFICE.
2. REFER TO NOTES 1, 2, 3 AND 4 FROM UTILITY PLAN U-1.

ALL DIMENSIONS ARE IN METERS UNLESS OTHERWISE SHOWN

UTILITY PLAN (EXISTING UTILITIES)

SCALE 1:500

1 REVISED PER ADDENDUM No. 1 DATED APRIL 21, 2011

U-9

STATE OF CALIFORNIA - DEPARTMENT OF TRANSPORTATION
Caltrans OFFICE OF DESIGN A

FUNCTIONAL SUPERVISOR: UGO ANAKWENZE
CALCULATED-DESIGNED BY: HAYKAZ AGHAJANIAN
CHECKED BY: NGIM NANCY PE
REVISED BY / DATE REVISED

LAST REVISION DATE PLOTTED => 20-APR-2011
00-00-00 TIME PLOTTED => 12:37

Dist	COUNTY	ROUTE	KILOMETER POST TOTAL PROJECT	SHEET No.	TOTAL SHEETS
07	LA	5	2.9/4.9	400	1082

REGISTERED CIVIL ENGINEER 12-23-09 DATE

6-21-10
PLANS APPROVAL DATE

REGISTERED PROFESSIONAL ENGINEER HAYKAZ AGHAJANIAN No. C53866 Exp. 12-31-11 CIVIL STATE OF CALIFORNIA

THE STATE OF CALIFORNIA OR ITS OFFICERS OR AGENTS SHALL NOT BE RESPONSIBLE FOR THE ACCURACY OR COMPLETENESS OF ELECTRONIC COPIES OF THIS PLAN SHEET.

Caltrans Metric

1

U-1

POTHOLE No.	NORTHING/EASTING	UTILITY COMPANY	SURFACE/GROUND ELEVATION (m)	DEPTH (m)
1	543076.303 1996648.079	300 mm WASTE Wtr CHEVRON	20.649	2.012
2	543076.155 1996648.569	200 mm CRUDE OIL CHEVRON	20.670	2.012
3	543076.877 1996649.349	200 mm SPARE CHEVRON	20.655	2.079
4	543075.374 1996650.899	200 mm SPARE CHEVRON	20.650	2.042
5	543074.926 1996652.341	150 mm Nat Gaso CHEVRON	20.652	2.140
6	543074.567 1996653.488	250 mm CRUDE OIL CHEVRON	20.647	2.134
11	543082.392 1996681.104	300 mm WASTE Wtr CHEVRON	20.298	1.829
12	543081.728 1996681.030	200 mm CRUDE OIL CHEVRON	20.350	1.951
13	543081.066 1996681.450	200 mm PRODUCT CHEVRON	20.306	1.914
14	543080.607 1996682.411	150 mm Nat Gaso CHEVRON	20.237	1.945
15	543080.275 1996683.140	250 mm CRUDE OIL CHEVRON	20.203	1.951
20A	543140.999 1996542.138	100 mm GAS (SCG)	20.577	1.524
21	543076.630 1996720.006	300 mm DRY GAS CHEVRON	20.222	1.524
21A	543140.103 1996543.613	250 mm GAS (SCG)	20.586	1.859
22	543075.999 1996719.993	200 mm CRUDE OIL CHEVRON	20.300	1.621
23	543075.478 1996720.002	200 mm PRODUCT CHEVRON	20.300	1.536
24	543074.812 1996719.946	150 mm Nat Gaso CHEVRON	20.383	1.527
25	543074.355 1996719.837	250 mm CRUDE OIL CHEVRON	20.394	1.524
27	543053.509 1996508.381	250 mm GAS (SCG)	21.353	1.804
28	543083.247 1996508.426	100 mm GAS (SCG)	20.860	1.448
29	543068.554 1996756.837	250 mm CRUDE OIL CHEVRON	20.273	1.542
30	543069.171 1996756.980	150 mm Nat Gaso CHEVRON	20.281	1.737
31	543069.965 1996756.933	200 mm PRODUCT CHEVRON	20.423	1.859
32	543070.205 1996756.914	200 mm CRUDE OIL CHEVRON	20.508	1.920
33	543070.793 1996756.853	300 mm WASTE Wtr CHEVRON	20.505	1.829
34	543071.512 1996756.677	SPARE 200 mm CHEVRON	20.373	1.890
35	543062.120 1996574.610	SPARE 200 mm CHEVRON	20.521	1.920
36	543061.557 1996574.746	300 mm WASTE Wtr CHEVRON	20.520	2.164
37	543061.270 1996574.791	200 mm CRUDE OIL CHEVRON	20.520	2.469
38	543060.902 1996574.849	200 mm PRODUCT CHEVRON	20.507	2.469
39	543060.431 1996575.026	150 mm Nat Gaso CHEVRON	20.515	2.457
40	543060.105 1996575.076	250 mm CRUDE OIL CHEVRON	20.500	2.438

U-1

POTHOLE No.	NORTHING/EASTING	UTILITY COMPANY	SURFACE/GROUND ELEVATION (m)	DEPTH (m)
G1	543073.219 1996768.843	100 mm GAS (SCG)	20.367	1.626
G2	543072.445 1996760.528	100 mm GAS (SCG)	20.391	1.600
G3	543089.237 1996641.854	100 mm GAS (SCG)	20.175	0.965
G4	543089.413 1996640.266	250 mm GAS (SCG)	20.193	1.245
G5	543093.802 1996631.616	100 mm GAS (SCG)	20.236	1.143
G6	543093.409 1996632.652	250 mm GAS (SCG)	20.205	1.257
G7	543093.345 1996632.640	100 mm GAS (SCG)	20.193	1.118
W6	543094.107 1996644.823	300 mm AC WATER (CSFS)	20.269	1.575
W7	543097.625 1996635.941	300 mm AC WATER (CSFS)	20.333	1.549
W8	543089.627 1996658.295	300 mm AC WATER (CSFS)	20.364	1.727
W9	543086.792 1996670.588	300 mm AC WATER (CSFS)	20.470	1.956
W-1	543137.066 1996471.440	400 mm AC WATER (CSFS)	20.876	2.311
W-2	543173.176 1996494.133	400 mm AC WATER (CSFS)	20.547	1.727
V-1	543175.422 1996490.134	UG TEL CONDUITS VERIZON	20.562	1.321
V-2	543141.236 1996466.344	UG TEL CONDUITS VERIZON	20.891	1.168
V-3	543137.529 1996456.343	UG TEL CONDUITS VERIZON	20.690	0.991
Sw1	543078.838 1996725.173	400 mm AC WATER (CSFS)	20.135	1.888
Sw2	543078.771 1996726.238	400 mm AC WATER (CSFS)	20.205	1.880
Sw3	543074.596 1996757.197	400 mm AC WATER (CSFS)	20.477	2.311
Sw4	543074.145 1996760.468	400 mm AC WATER (CSFS)	20.454	2.311
Sw5	543074.035 1996762.500	400 mm AC WATER (CSFS)	20.494	2.311
Sw6	543074.016 1996766.534	400 mm AC WATER (CSFS)	20.477	2.335
Sw7	543084.352 1996685.794	400 mm AC WATER (CSFS)	20.278	1.816
27A	543083.979 1996508.392	250 mm GAS (SCG)	19.405	1.448
27B	543086.791 1996508.305	250 mm GAS (SCG)	19.433	1.397
27C	543088.151 1996508.772	250 mm GAS (SCG)	19.362	1.441
28A	543090.491 1996509.167	100 mm GAS (SCG)	19.123	1.664
28B	543093.808 1996511.104	100 mm GAS (SCG)	19.144	1.822
28C	543099.149 1996508.432	80 mm GAS (SCG)	19.056	1.956
28D	543120.090 1996476.358	80 mm GAS (SCG)	19.397	1.232

U-4

POTHOLE No.	NORTHING/EASTING	UTILITY COMPANY	SURFACE/GROUND ELEVATION (m)	DEPTH (m)
7	543744.534 1995717.821	100 mm GAS (SCG)	24.453	1.600
8	543744.333 1995716.534	300 mm OIL (PAALP)	24.435	1.956
16	543636.621 1995678.283	VERIZON	24.667	1.600
17	543715.867 1995678.324	VERIZON	24.516	3.048
19	543744.060 1995715.077	300 mm Wtr (CSFS)	24.454	1.118
29	543636.955 1995677.751	VERIZON	24.663	1.472

U-7

POTHOLE No.	NORTHING/EASTING	UTILITY COMPANY	SURFACE/GROUND ELEVATION (m)	DEPTH (m)
53	544293.295 1994879.988	400 mm RECYCLED WATER (CBMWD)	24.145	0.995
54	544294.723 1994878.845	600 mm KINDER MORGAN	24.083	1.173
55	544251.345 1994879.859	400 mm RECYCLED WATER (CBMWD)	23.963	1.093
56	544251.648 1994878.506	600 mm KINDER MORGAN	23.896	1.236
57	544240.683 1994866.384	250 mm GASOLINE IN 400 mm Csg (WOC)	23.766	1.046
58	544240.673 1994867.713	VERIZON	23.772	1.802
59	544243.977 1994869.342	VERIZON	24.031	1.211
60	544246.991 1994864.612	250 mm GASOLINE IN 400 mm Csg (WOC)	24.063	2.633
61	544243.210 1994891.593	80 mm GAS (SCG)	24.062	1.022
62	544293.570 1994891.902	80 mm GAS (SCG)	24.180	0.860
63	544158.830 1994897.692	200 mm AC Wtr IN 400 mm Csg (PW)	24.535	1.570
64	544199.005 1994907.438	200 mm AC Wtr IN 400 mm Csg (PW)	23.682	1.524
65	54199.4748 1994907.530	200 mm AC Wtr IN 400 mm Csg (PW)	23.676	1.524
81	544153.010 1994868.840	2-100 mm PVC VERIZON	24.402	1.829
82	544227.47 1994868.640	2-100 mm PVC VERIZON	23.671	2.435
90	544161.100 1994865.440	250 mm GASOLINE IN 400 mm Csg (WOC)	24.625	3.658

1 **REVISED PER ADDENDUM No. 1 DATED APRIL 21, 2011**

THIS PLAN FOR UTILITIY INFORMATION ONLY

UTILITY PLAN
(POTHOLE TABLE)

U-14

STATE OF CALIFORNIA - DEPARTMENT OF TRANSPORTATION
Caltrans OFFICE OF DESIGN A

FUNCTIONAL SUPERVISOR: HAYKAZ AGHAJANIAN
CALCULATED-DESIGNED BY: HAYKAZ AGHAJANIAN
CHECKED BY: NGIM NANCY PE
REVISED BY
DATE REVISED

LAST REVISION 00-00-00
DATE PLOTTED => 20-APR-2011
TIME PLOTTED => 12:37

Dist	COUNTY	ROUTE	KILOMETER POST TOTAL PROJECT	SHEET No.	TOTAL SHEETS
07	LA	5	2.9/4.9	401	1082

Caltrans Metric

REGISTERED CIVIL ENGINEER 12-23-09 DATE

6-21-10
PLANS APPROVAL DATE

REGISTERED PROFESSIONAL ENGINEER HAYKAZ AGHAJANIAN No. C53866 Exp. 12-31-11 CIVIL STATE OF CALIFORNIA

THE STATE OF CALIFORNIA OR ITS OFFICERS OR AGENTS SHALL NOT BE RESPONSIBLE FOR THE ACCURACY OR COMPLETENESS OF ELECTRONIC COPIES OF THIS PLAN SHEET.

1

U-7

POTHOLE No.	NORTHING/EASTING	UTILITY COMPANY	SURFACE/GROUND ELEVATION (m)	DEPTH (m)
91	544230.210 1994866.340	250 mm GASOLINE IN 400 mm Csg (WOC)	23.704	2.566
92	544157.470 1994863.650	400 mm OIL KINDER MORGAN	24.411	3.252
92A	544152.800 1994872.62	600 mm OIL KINDER MORGAN	24.478	3.658
93	544232.480 1994863.840	400 mm OIL KINDER MORGAN	23.726	2.262
93A	544223.760 1994873.710	600 mm OIL KINDER MORGAN	23.704	2.667
362	544259.57 1994878.58	600 mm OIL KINDER MORGAN	23.915	1.829
363	544253.72 1994865.23	250 mm GASOLINE (WOC)	24.579	3.658
364	544253.09 1994864.19	400 mm OIL KINDER MORGAN	24.427	3.048
RW3	544245.516 1994879.832	400 mm RECYCLED WATER (CBMWD)	23.902	1.137

U-8

POTHOLE No.	NORTHING/EASTING	UTILITY COMPANY	SURFACE/GROUND ELEVATION (m)	DEPTH (m)
2	543239.408 1995699.625	300 mm OIL (PAALP)	22.861	1.219
14	543392.437 1995678.747	400 mm Wtr (CSFS)	23.587	1.524
15	543247.543 1995679.023	400 mm Wtr (CSFS)	23.06	1.016
53A	543337.038 1995700.776	100 mm GAS (SCG)	23.085	0.945
54A	543345.130 1995698.929	300 mm OIL (PAALP)	23.065	1.158
22	543262.166 1995699.164	2-100 mm PVC VERIZON	22.893	0.762
16	543220.590 1995679.221	400 mm Wtr (CSFS)	23.039	1.130
54B	543261.965 1995699.238	300 mm OIL (PAALP)	22.891	1.146
3	543279.646 1995700.986	100 mm GAS (SCG)	22.884	1.118
4	543316.782 1995700.847	100 mm GAS (SCG)	22.926	1.143
54C	543316.972 1995698.871	300 mm OIL (PAALP)	22.941	1.095
54D	543345.254 1995698.777	300 mm OIL (PAALP)	22.071	1.156
5	543388.275 1995700.463	100 mm GAS (SCG)	23.287	1.067
54E	543387.660 1995698.598	300 mm OIL (PAALP)	23.305	1.054
6	543421.184 1995700.195	100 mm GAS (SCG)	23.476	1.118
7	543421.269 1995699.926	50 mm GAS (SCG)	23.477	1.035

U-9

POTHOLE No.	NORTHING/EASTING	UTILITY COMPANY	SURFACE/GROUND ELEVATION (m)	DEPTH (m)
3	543446.998 1995699.625	100 mm GAS (SCG)	23.569	1.346
4	543446.815 1995698.470	300 mm OIL (PAALP)	23.589	1.346
5	543439.698 1995659.640	300 mm AC Wtr (CSFS)	23.585	1.575
6	543439.482 1995589.041	300 mm AC Wtr (CSFS)	23.331	1.168
13	543441.771 1995679.670	VERIZON	23.368	D TOP 1.219
16	543636.621 1995678.283	VERIZON	24.667	D TOP 1.600
17	543715.867 1995678.324	4 DUCTS VERIZON	24.516	3.048
29	543636.955 1995677.751	VERIZON	24.663	D TOP 1.472
30	543529.483 1995604.916	FIBER OPTIC SPRINT	23.866	1.118
31	543531.304 1995605.836	254 mm HP Gaso KINDER MORGAN	23.803	0.991
32	543533.200 1995606.715	400 mm OIL KINDER MORGAN	23.855	1.016
33	543462.565 1995707.437	400 mm OIL KINDER MORGAN	23.801	2.438
34	543467.139 1995705.027	254 mm HP Gaso KINDER MORGAN	23.826	2.133
35	543470.400 1995704.623	FIBER OPTIC SPRINT	23.897	0.838
36	543487.293 1995669.767	400 mm OIL KINDER MORGAN	23.585	2.235
37	543503.847 1995652.441	400 mm OIL KINDER MORGAN	23.757	1.295
38	543482.975 1995703.981	FIBER OPTIC QWEST	23.995	2.388
39	543489.171 1995707.906	Comm F/O LEVEL3 & ABOVE NET	23.911	3.556
40	543516.220 1995652.699	4 DUCTS F/O QWEST	23.899	1.549
41	543519.850 1995653.077	Comm F/O LEVEL(3)	23.897	1.346
42	543522.012 1995654.956	Comm F/O LEVEL(3) & ABOVE NET	23.925	1.219
43	543551.481 1995612.633	Comm F/O LEVEL(3) & ABOVE NET	23.882	1.219
44	543547.987 1995609.840	Comm F/O LEVEL(3)	23.975	1.346
45	543542.500 1995612.180	4 DUCTS F/O QWEST	24.164	1.651
46	543494.396 1995671.140	Comm F/O LEVEL(3)	23.925	0.686
55	543474.294 1995700.021	100 mm GAS (SCG)	24.020	1.554
56	543474.885 1995698.587	200 mm OIL (PAALP)	24.052	1.280
57	543471.396 1995702.785	FIBER OPTIC SPRINT	23.830	0.580
58	543477.050 1995693.935	FIBER OPTIC SPRINT	24.117	1.518
59	543473.374 1995699.415	FIBER OPTIC SPRINT	24.024	0.620

U-9 (CONTINUOUS)

POTHOLE No.	NORTHING/EASTING	UTILITY COMPANY	SURFACE/GROUND ELEVATIONS (m)	DEPTH (m)
70	543472.388 1995701.157	FIBER OPTIC SPRINT	23.991	1.054
71	543485.037 1995700.799	4 DUCTS F/O QWEST	24.142	2.407
72	543472.458 1995720.273	4 DUCTS F/O QWEST	23.775	1.475
4A	543627.044 1995717.071	300 mm OIL (PAALP)	24.838	2.032
4B	543673.935 1995718.732	300 mm OIL (PAALP)	24.607	1.575
4C	543728.665 1995718.007	300 mm OIL (PAALP)	24.249	1.689
4D	543544.305 1995712.515	300 mm OIL (PAALP)	24.443	1.524
5A	543544.603 1995708.981	300 mm Wtr AC (CSFS)	24.341	1.778
W10	543442.511 1995701.08	400 mm Stl Wtr MORTAR LINED (CSFS)	23.346	1.715
W11	543441.979 1995700.713	300 mm AC Wtr MORTAR LINED (CSFS)	23.421	1.715
W12	543441.998 1995701.08	400 mm Stl Wtr MORTAR LINED (CSFS)	23.493	1.715
W91	543441.919 1995701.113	400 mm Stl Wtr (CSFS)	23.421	1.715
W12A	543721.139 1995716.949	300 mm Stl Wtr (CSFS)	24.369	1.079
W13	543721.582 1995716.920	300 mm Stl Wtr (CSFS)	24.369	1.079
W14	543718.030 1995676.986	200 mm AC Wtr (CSFS)	24.565	1.067
W15	543717.778 1995677.253	200 mm AC Wtr (CSFS)	24.561	1.067
W18	543706.373 1995690.202	200 mm AC Wtr (CSFS)	24.489	1.092
W19	543706.075 1995690.657	200 mm AC Wtr (CSFS)	24.456	1.092
W16	543696.201 1995707.743	200 mm AC Wtr (CSFS)	24.434	1.130
W17	543696.012 1995708.182	200 mm AC Wtr (CSFS)	24.461	1.130

1 **REVISED PER ADDENDUM No. 1 DATED APRIL 21, 2011**

THIS PLAN FOR UTILITIY INFORMATION ONLY

UTILITY PLAN (POTHOLE TABLE) U-15

STATE OF CALIFORNIA - DEPARTMENT OF TRANSPORTATION
Caltrans OFFICE OF DESIGN A

FUNCTIONAL SUPERVISOR: HAYKAZ AGHAJANIAN
CALCULATED-DESIGNED BY: HAYKAZ AGHAJANIAN
CHECKED BY: NGIM NANCY PE
REVISED BY / DATE REVISED

LAST REVISION 00-00-00
DATE PLOTTED => 20-APR-2011
TIME PLOTTED => 12:37

Dist	COUNTY	ROUTE	KILOMETER POST TOTAL PROJECT	SHEET No.	TOTAL SHEETS
07	LA	5	2.9/4.9	402	1082

Caltrans Metric

1

REGISTERED CIVIL ENGINEER 12-23-09 DATE

6-21-10
PLANS APPROVAL DATE

REGISTERED PROFESSIONAL ENGINEER HAYKAZ AGHAJANIAN No. C53866 Exp. 12-31-11 CIVIL STATE OF CALIFORNIA

THE STATE OF CALIFORNIA OR ITS OFFICERS OR AGENTS SHALL NOT BE RESPONSIBLE FOR THE ACCURACY OR COMPLETENESS OF ELECTRONIC COPIES OF THIS PLAN SHEET.

U-10

POTHOLE No.	NORTHING/EASTING	UTILITY COMPANY	SURFACE/GROUND ELEVATION (m)	DEPTH (m)
7	543744.534 1995717.821	100 mm GAS (SCG)	24.453	1.600
8	543744.333 1995716.534	300 mm OIL (PAALP)	24.435	1.956
9	543805.571 1995712.027	100 mm GAS (SCG)	24.424	1.422
10	543808.883 1995710.687	300 mm OIL (PAALP)	24.531	1.803
18	543808.524 1995708.581	400 mm Wtr (CSFS)	24.676	1.270
19	543744.060 1995715.077	400 mm Wtr (CSFS)	24.454	1.118
20	543813.966 1995702.941	400 mm Wtr (CSFS)	25.111	1.524
21	543869.961 1995693.840	300 mm OIL (PAALP)	24.569	1.295
22	543869.749 1995698.506	100 mm GAS (SCG)	23.472	1.321
50	543886.885 1995702.415	400 mm Wtr (CSFS)	24.258	1.168
13	543812.840 1995704.487	400 mm Stl Wtr MORTAR LINED (CSFS)	25.149	1.776
51	543879.515 1995678.914	VERIZON	24.257	1.168
52	543879.330 1995677.035	VERIZON	24.258	1.168
1	543818.995 1995706.057	300 mm OIL (PAALP)	24.704	1.721
2	543815.052 1995709.537	300 mm OIL (PAALP)	24.546	1.778
3	543814.027 1995709.826	300 mm OIL (PAALP)	24.506	1.816
4	543812.639 1995709.611	100 mm GAS (SCG)	24.673	1.638
5	543809.542 1995708.58	300 mm Stl Wtr MORTAR LINED (CSFS)	24.628	1.321
6	543805.9422 1995708.721	300 mm Stl Wtr MORTAR LINED (CSFS)	24.485	1.041
8A	543825.2135 1995713.624	6-100 mm CONDUIT VERIZON	24.219	1.232
14	543780.233 1995712.724	300 mm OIL (PAALP)	24.262	1.727
15	543779.866 1995714.369	100 mm GAS (SCG)	24.363	1.549
CG1	544040.909 1995681.693	50 mm GAS (SCG)	24.750	1.099
CG2	544021.253 1995681.885	40 mm GAS (SCG)	24.789	1.194
NW1	543915.341 1995682.238	300 mm DIP WATER (CSFS)	24.530	1.613
W8	544025.150 1995678.455	300 mm DIP WATER (CSFS)	24.459	1.473
T1	543844.334 1995677.145	6-89 mm ABS VERIZON	24.216	1.219
T2	543844.103 1995680.105	6-100 mm PVC VERIZON	24.268	.533
RW2	543838.424 1995682.519	400 mm RECYCLED WATER (CBMWD)	24.387	.610

U-11

POTHOLE No.	NORTHING/EASTING	UTILITY COMPANY	SURFACE/GROUND ELEVATIONS (m)	DEPTH (m)
11	544051.806 1995698.015	100 mm GAS (SCG)	24.815	1.346
12	544051.835 1995693.473	300 mm OIL (PAALP)	24.929	1.422
23	544052.632 1995678.701	VERIZON	24.717	1.524
24	544053.009 1995676.332	150 mm AC Wtr (CSFS)	24.932	1.524
25	544046.185 1995674.907	300 mm Stl Wtr (CSFS)	24.951	1.346

U-13

POTHOLE No.	NORTHING/EASTING	UTILITY COMPANY	SURFACE/GROUND ELEVATION (m)	DEPTH (m)
16	542993.145 1995449.171	100 mm GAS (SCG)	22.153	1.219
17	543047.869 1995447.601	100 mm GAS (SCG)	22.401	1.012
18	543036.803 1995432.788	400 mm WATER (CSFS)	22.428	1.646
19	543044.430 1995466.981	200 mm WATER (CSFS)	22.380	1.603
20	543037.232 1995477.041	400 mm WATER (CSFS)	22.315	1.640

1 REVISED PER ADDENDUM No. 1 DATED APRIL 21, 2011

THIS PLAN FOR UTILITIY INFORMATION ONLY

UTILITY PLAN (POTHOLE TABLE) U-16

STATE OF CALIFORNIA - DEPARTMENT OF TRANSPORTATION
Caltrans OFFICE OF DESIGN A

FUNCTIONAL SUPERVISOR HAYKAZ AGHAJANIAN

CALCULATED-DESIGNED BY HAYKAZ AGHAJANIAN
CHECKED BY NGIM NANCY PE

REVISED BY
DATE REVISED

LAST REVISION 00-00-00
DATE PLOTTED => 20-APR-2011
TIME PLOTTED => 12:37

Dist	COUNTY	ROUTE	KILOMETER POST TOTAL PROJECT	SHEET No.	TOTAL SHEETS
07	LA	5	2.9/4.9	403	1082

REGISTERED CIVIL ENGINEER 12-23-09 DATE

6-21-10
PLANS APPROVAL DATE

REGISTERED PROFESSIONAL ENGINEER HAYKAZ AGHAJANIAN No. C53866 Exp. 12-31-11 CIVIL STATE OF CALIFORNIA

THE STATE OF CALIFORNIA OR ITS OFFICERS OR AGENTS SHALL NOT BE RESPONSIBLE FOR THE ACCURACY OR COMPLETENESS OF ELECTRONIC COPIES OF THIS PLAN SHEET.

Caltrans Metric

1

NOTES:

1. FOR ACCURATE RIGHT OF WAY DATA, CONTACT RIGHT OF WAY ENGINEERING AT THE DISTRICT OFFICE.
2. LOCATION OF UTILITY FACILITIES SHOWN ON THE THESE PLANS ARE APPROXIMATE AND SHALL BE VERIFIED BY THE CONTRACTOR PRIOR TO CONSTRUCTION.
3. FOR RELOCATION OF SEWER FACILITIES REFER TO SEWER PLANS.
4. THIS PLAN FOR UTILITY INFORMATION ONLY

(*) : UTILITY FACILITY TO BE REMOVED DURING CONSTRUCTION BY OTHERS.
(**) : UTILITY FACILITY TO BE ABANDONED IN PLACE DURING CONSTRUCTION BY OTHERS.
(***) : UTILITY FACILITY TO BE INSTALLED DURING CONSTRUCTION BY OTHERS.
(X) : Swr FACILITY TO BE REMOVED DURING CONSTRUCTION BY CONTRACTOR.
(XX) : Swr FACILITY TO BE ABANDONED IN PLACE DURING CONSTRUCTION BY CONTRACTOR.
(XXX) : Swr FACILITY TO BE INSTALLED DURING CONSTRUCTION BY CONTRACTOR.
(ADJ) : Swr MH WILL BE ADJUSTED TO GRADE DURING CONSTRUCTION BY CONTRACTOR.
(E) : EXISTING UTILITY FACILITY TO REMAIN

EXISTING UTILITY TO BE ABANDONED
(E) EXISTING UTILITY TO REMAIN — (Abn) — (E) EXISTING UTILITY TO REMAIN

ASBESTOS CEMENT PIPE TO BE REMOVED BY CONTRACTOR DURING CONSTRUCTION

LEGEND:

1 **REVISED PER ADDENDUM No. 1 DATED APRIL 21, 2011**

(#) : EXISTING ASBESTOS CEMENT PIPE WATER LINE OWNED BY CITY OF SANTA FE SPRINGS WILL BE CUT AND CAPPED AND REMOVED DURING CONSTRUCTION BY CONTRACTOR. SEE UTILITY SHEET U-17, U-19, U-20, U-21, AND U-27.

(#) : 300 mm OIL LINE OWNED BY (PAALP) WILL BE CUT AND CAPPED AND REMOVED DURING CONSTRUCTION BY CONTRACTOR. SEE UTILITY SHEET U-24, U-25, U-26, AND U-27.

(#A) : 300 mm OIL LINE OWNED BY PLAINS ALL AMERICAN PIPELINE, L.P. (PAALP) WILL BE ABANDONED IN PLACE DURING CONSTRUCTION BY CONTRACTOR. SEE UTILITY SHEET U-24, U-25, U-26, AND U-27.

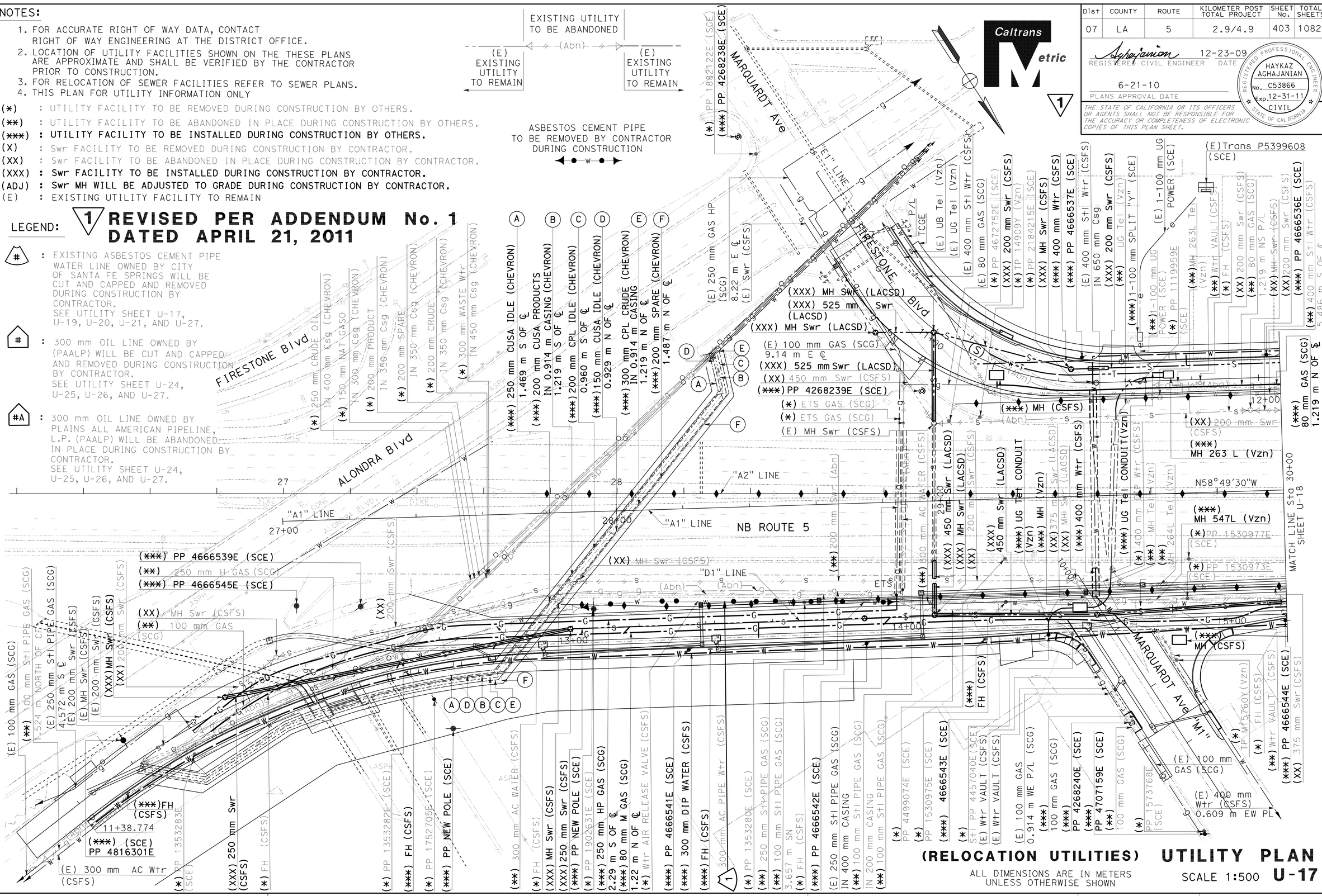

(RELOCATION UTILITIES) UTILITY PLAN

ALL DIMENSIONS ARE IN METERS UNLESS OTHERWISE SHOWN

SCALE 1:500 **U-17**

REVISED BY	KN
DATE REVISED	9/09
CALCULATED-DESIGNED BY	HAYKAZ AGHAJANIAN
CHECKED BY	NGIM NANCY PE
FUNCTIONAL SUPERVISOR	HAYKAZ AGHAJANIAN

STATE OF CALIFORNIA - DEPARTMENT OF TRANSPORTATION
Caltrans OFFICE OF DESIGN A

72159cka017.add

LAST REVISION 00-00-00 | DATE PLOTTED => 20-APR-2011 | TIME PLOTTED => 12:37

BORDER LAST REVISED 3/1/2007 | RELATIVE BORDER SCALE IS IN MILLIMETERS 0 20 40 60 80 | USERNAME => trlenard | DGN FILE => 72159cka017.add | CU 07328 | EA 2159C1

NOTE:

1. FOR ACCURATE RIGHT OF WAY DATA, CONTACT RIGHT OF WAY ENGINEERING AT THE DISTRICT OFFICE.
2. REFER TO NOTES 1, 2, AND 3 FROM UTILITY PLAN U-17.

Dist	COUNTY	ROUTE	KILOMETER POST TOTAL PROJECT	SHEET No.	TOTAL SHEETS
07	LA	5	2.9/4.9	404	1082

REGISTERED CIVIL ENGINEER 12-23-09 DATE

6-21-10
PLANS APPROVAL DATE

REGISTERED PROFESSIONAL ENGINEER HAYKAZ AGHAJANIAN No. C53866 Exp. 12-31-11 CIVIL STATE OF CALIFORNIA

THE STATE OF CALIFORNIA OR ITS OFFICERS OR AGENTS SHALL NOT BE RESPONSIBLE FOR THE ACCURACY OR COMPLETENESS OF ELECTRONIC COPIES OF THIS PLAN SHEET.

Caltrans Metric

1

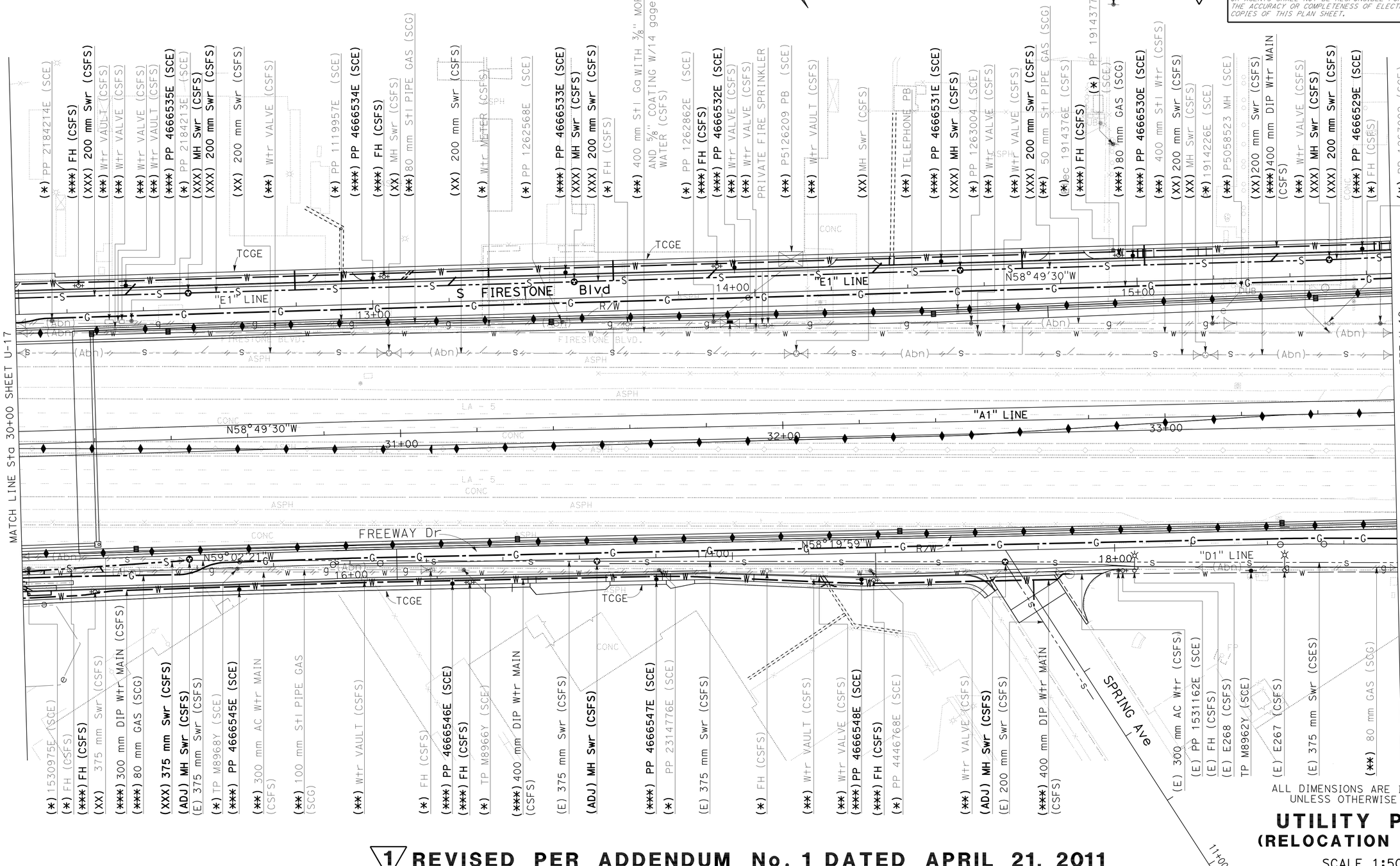

ALL DIMENSIONS ARE IN METERS UNLESS OTHERWISE SHOWN

UTILITY PLAN (RELOCATION UTILITIES)

SCALE 1:500

U-18

1 REVISED PER ADDENDUM No. 1 DATED APRIL 21, 2011

THIS PLAN FOR UTILITY INFORMATION ONLY

CALCULATED-DESIGNED BY	HAYKAZ AGHAJANIAN	REVISED BY	
CHECKED BY	NGIM NANCY PE	DATE REVISED	
FUNCTIONAL SUPERVISOR	HAYKAZ AGHAJANIAN		

STATE OF CALIFORNIA - DEPARTMENT OF TRANSPORTATION
Caltrans OFFICE OF DESIGN A

LAST REVISION 00-00-00 | DATE PLOTTED => 20-APR-2011 | TIME PLOTTED => 12:38

NOTE:
1. FOR ACCURATE RIGHT OF WAY DATA, CONTACT RIGHT OF WAY ENGINEERING AT THE DISTRICT OFFICE.
2. REFER TO NOTES 1, 2, AND 3 FROM UTILITY PLAN U-17.

Dist	COUNTY	ROUTE	KILOMETER POST TOTAL PROJECT	SHEET No.	TOTAL SHEETS
07	LA	5	2.9/4.9	405	1082

REGISTERED CIVIL ENGINEER 12-23-09 DATE

6-21-10
PLANS APPROVAL DATE

REGISTERED PROFESSIONAL ENGINEER HAYKAZ AGHAJANIAN No. C53866 Exp. 3-31-10 CIVIL STATE OF CALIFORNIA

THE STATE OF CALIFORNIA OR ITS OFFICERS OR AGENTS SHALL NOT BE RESPONSIBLE FOR THE ACCURACY OR COMPLETENESS OF ELECTRONIC COPIES OF THIS PLAN SHEET.

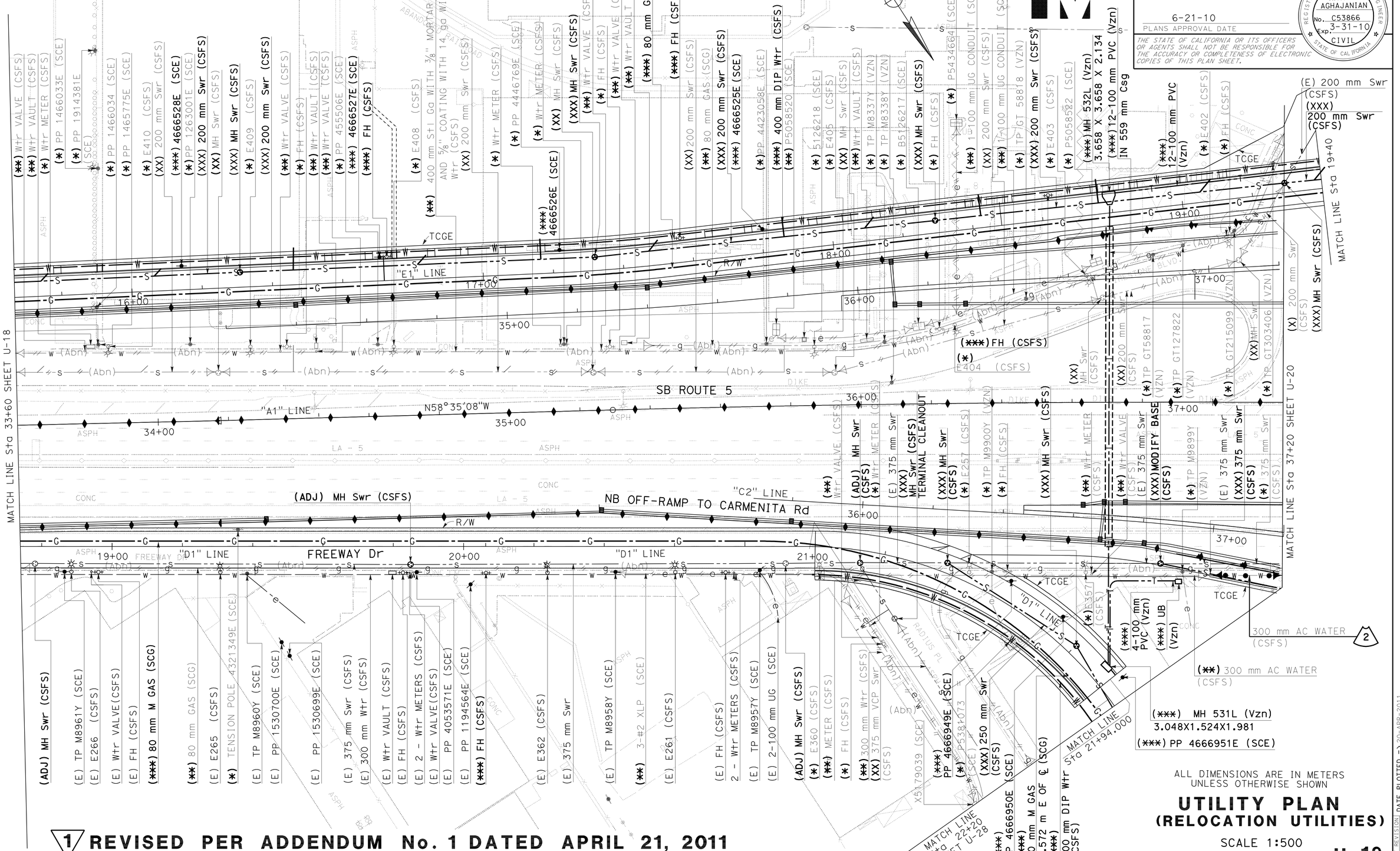

ALL DIMENSIONS ARE IN METERS UNLESS OTHERWISE SHOWN

UTILITY PLAN
(RELOCATION UTILITIES)

SCALE 1:500

U-19

1 REVISED PER ADDENDUM No. 1 DATED APRIL 21, 2011

THIS PLAN FOR UTILITY INFORMATION ONLY

STATE OF CALIFORNIA - DEPARTMENT OF TRANSPORTATION
Caltrans OFFICE OF DESIGN A

FUNCTIONAL SUPERVISOR: HAYKAZ AGHAJANIAN
CALCULATED-DESIGNED BY: HAYKAZ AGHAJANIAN
CHECKED BY: NGIM NANCY PE
REVISED BY / DATE REVISED

LAST REVISION 00-00-00 | DATE PLOTTED => 20-APR-2011 | TIME PLOTTED => 12:38

Dist	COUNTY	ROUTE	KILOMETER POST TOTAL PROJECT	SHEET No.	TOTAL SHEETS
07	LA	5	2.9/4.9	406	1082

REGISTERED CIVIL ENGINEER 12-23-09 DATE

6-21-10
PLANS APPROVAL DATE

REGISTERED PROFESSIONAL ENGINEER HAYKAZ AGHAJANIAN No. C53866 Exp. 12-31-11 CIVIL STATE OF CALIFORNIA

THE STATE OF CALIFORNIA OR ITS OFFICERS OR AGENTS SHALL NOT BE RESPONSIBLE FOR THE ACCURACY OR COMPLETENESS OF ELECTRONIC COPIES OF THIS PLAN SHEET.

Caltrans Metric

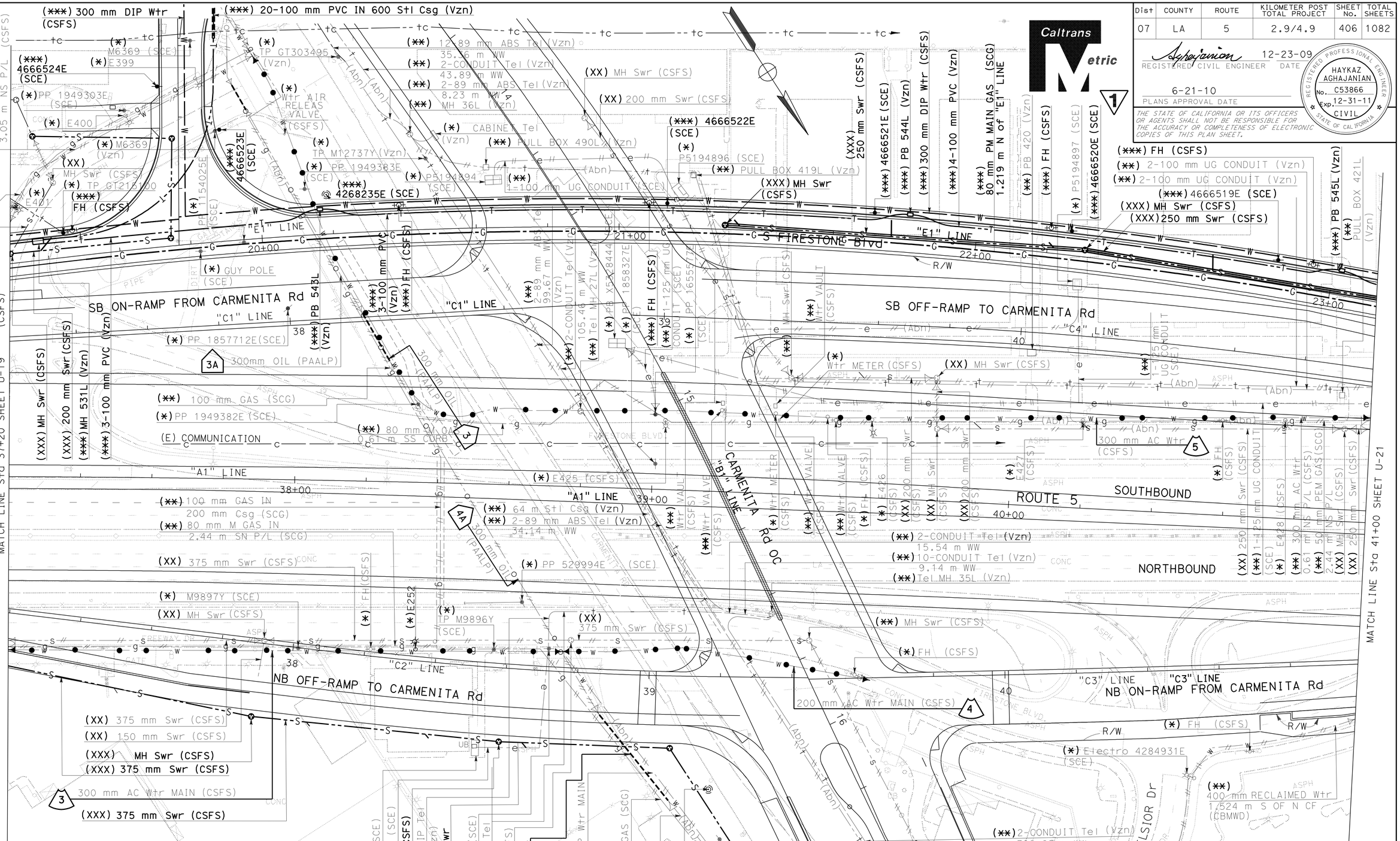

NOTE:

1. FOR ACCURATE RIGHT OF WAY DATA, CONTACT RIGHT OF WAY ENGINEERING AT THE DISTRICT OFFICE.
2. REFER TO NOTES 1, 2 AND 3 FROM UTILITY PLAN U-17.

1 **REVISED PER ADDENDUM No. 1 DATED APRIL 21, 2011**

THIS PLAN FOR UTILITY INFORMATION ONLY

ALL DIMENSIONS ARE IN METERS UNLESS OTHERWISE SHOWN

UTILITY PLAN (RELOCATION UTILITIES)

SCALE 1:500

U-20

STATE OF CALIFORNIA - DEPARTMENT OF TRANSPORTATION
Caltrans OFFICE OF DESIGN A

FUNCTIONAL SUPERVISOR: HAYKAZ AGHAJANIAN
CALCULATED-DESIGNED BY: HAYKAZ AGHAJANIAN
CHECKED BY: NGIM NANCY PE
REVISED BY / DATE REVISED

LAST REVISION 00-00-00 DATE PLOTTED => 20-APR-2011 TIME PLOTTED => 10:38

NOTE:

1. FOR ACCURATE RIGHT OF WAY DATA, CONTACT RIGHT OF WAY ENGINEERING AT THE DISTRICT OFFICE.
2. REFER TO NOTES 1, 2, AND 3 FROM UTILITY PLAN U-17.

Dist	COUNTY	ROUTE	KILOMETER POST TOTAL PROJECT	SHEET No.	TOTAL SHEETS
07	LA	5	2.9/4.9	407	1082

REGISTERED CIVIL ENGINEER 12-23-10 DATE

6-21-10
PLANS APPROVAL DATE

HAYKAZ AGHAJANIAN No. C53866 Exp. 12-31-11 CIVIL STATE OF CALIFORNIA REGISTERED PROFESSIONAL ENGINEER

THE STATE OF CALIFORNIA OR ITS OFFICERS OR AGENTS SHALL NOT BE RESPONSIBLE FOR THE ACCURACY OR COMPLETENESS OF ElecNIC COPIES OF THIS PLAN SHEET.

Caltrans Metric

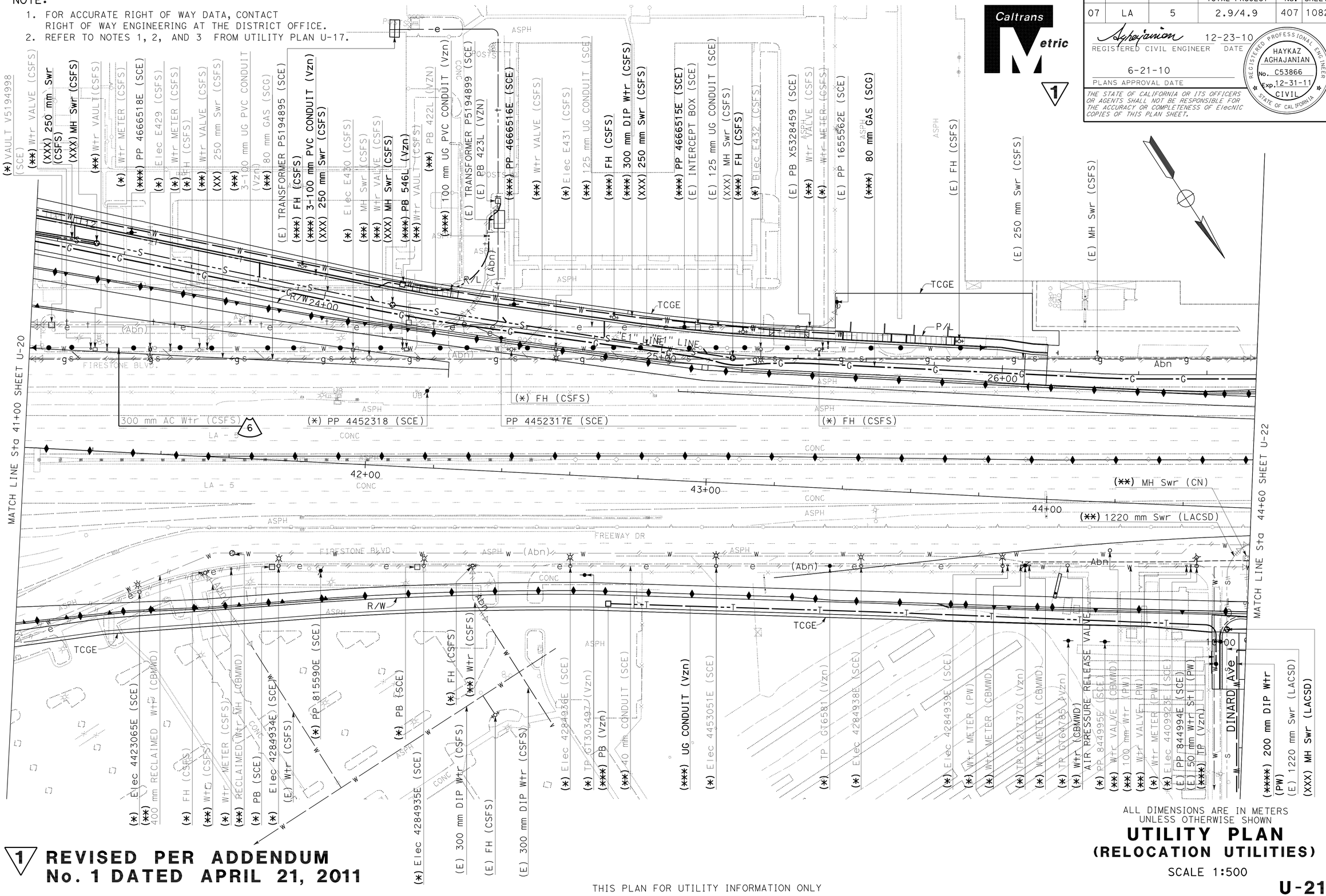

ALL DIMENSIONS ARE IN METERS UNLESS OTHERWISE SHOWN

UTILITY PLAN
(RELOCATION UTILITIES)

SCALE 1:500

1 REVISED PER ADDENDUM No. 1 DATED APRIL 21, 2011

THIS PLAN FOR UTILITY INFORMATION ONLY

U-21

STATE OF CALIFORNIA - DEPARTMENT OF TRANSPORTATION
Caltrans OFFICE OF DESIGN A

FUNCTIONAL SUPERVISOR: HAYKAZ AGHAJANIAN
CALCULATED-DESIGNED BY: HAYKAZ AGHAJANIAN
CHECKED BY: NGIM NANCY PE
REVISED BY / DATE REVISED

LAST REVISION 00-00-00 | DATE PLOTTED => 20-APR-2011 | TIME PLOTTED => 10:38

NOTES:

1. FOR ACCURATE RIGHT OF WAY DATA, CONTACT RIGHT OF ENGINEERING AT THE DISTRICT OFFICE.
2. REFER TO NOTES 1, 2 AND 3 FROM UTILITY PLAN U-17.

1 REVISED PER ADDENDUM No. 1 DATED APRIL 21, 2011

Caltrans Metric

Dist	COUNTY	ROUTE	KILOMETER POST TOTAL PROJECT	SHEET No.	TOTAL SHEETS
07	LA	5	2.9/4.9	408	1082

REGISTERED CIVIL ENGINEER 12-23-09 DATE

6-21-10
PLANS APPROVAL DATE

REGISTERED PROFESSIONAL ENGINEER HAYKAZ AGHAJANIAN No. C53866 Exp. 12-31-11 CIVIL STATE OF CALIFORNIA

THE STATE OF CALIFORNIA OR ITS OFFICERS OR AGENTS SHALL NOT BE RESPONSIBLE FOR THE ACCURACY OR COMPLETENESS OF ElecNIC COPIES OF THIS PLAN SHEET.

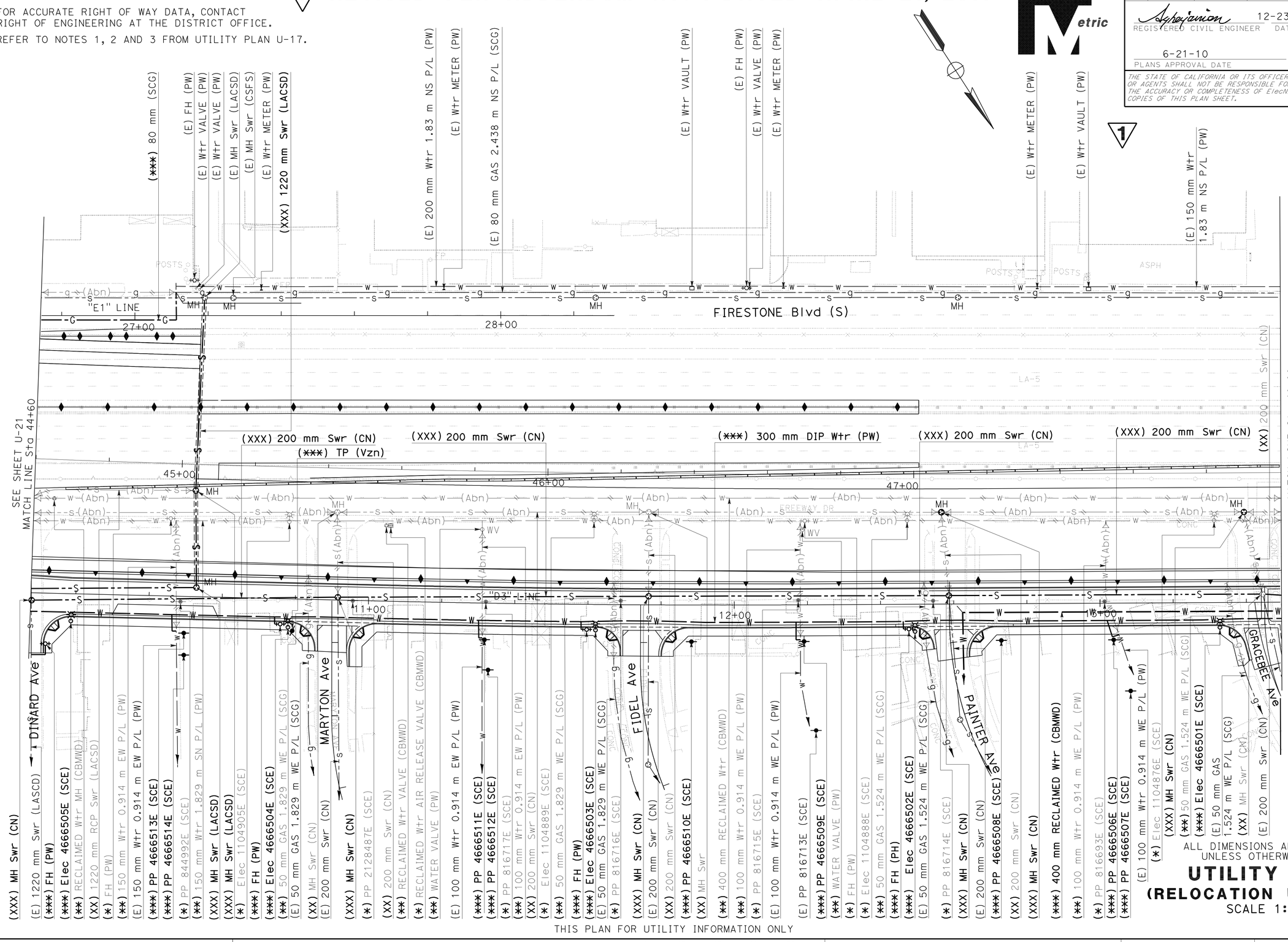

ALL DIMENSIONS ARE IN METERS UNLESS OTHERWISE SHOWN

UTILITY PLAN (RELOCATION UTILITIES)

SCALE 1:500

U-22

THIS PLAN FOR UTILITY INFORMATION ONLY

HAYKAZ AGHAJANIAN	REVISED BY
NGIM NANCY PE	DATE REVISED
CALCULATED-DESIGNED BY	
CHECKED BY	
FUNCTIONAL SUPERVISOR	
HAYKAZ AGHAJANIAN	

STATE OF CALIFORNIA - DEPARTMENT OF TRANSPORTATION
Caltrans OFFICE OF DESIGN A

72159cka022.add

LAST REVISION 00-00-00 | DATE PLOTTED => 20-APR-2011 | TIME PLOTTED => 10:39

NOTES:

1. FOR ACCURATE RIGHT OF WAY DATA, CONTACT RIGHT OF WAY ENGINEERING AT THE DISTRICT OFFICE.
2. REFER TO NOTES 1, 2 AND 3 FROM UTILITY PLAN U-17.

1 REVISED PER ADDENDUM No. 1 DATED APRIL 21, 2011

Caltrans Metric

Dist	COUNTY	ROUTE	KILOMETER POST TOTAL PROJECT	SHEET No.	TOTAL SHEETS
07	LA	5	2.9/4.9	409	1082

REGISTERED CIVIL ENGINEER 12-23-09 DATE

6-21-10
PLANS APPROVAL DATE

REGISTERED PROFESSIONAL ENGINEER HAYKAZ AGHAJANIAN No. C53866 Exp. 12-31-11 CIVIL STATE OF CALIFORNIA

THE STATE OF CALIFORNIA OR ITS OFFICERS OR AGENTS SHALL NOT BE RESPONSIBLE FOR THE ACCURACY OR COMPLETENESS OF ELECTRONIC COPIES OF THIS PLAN SHEET.

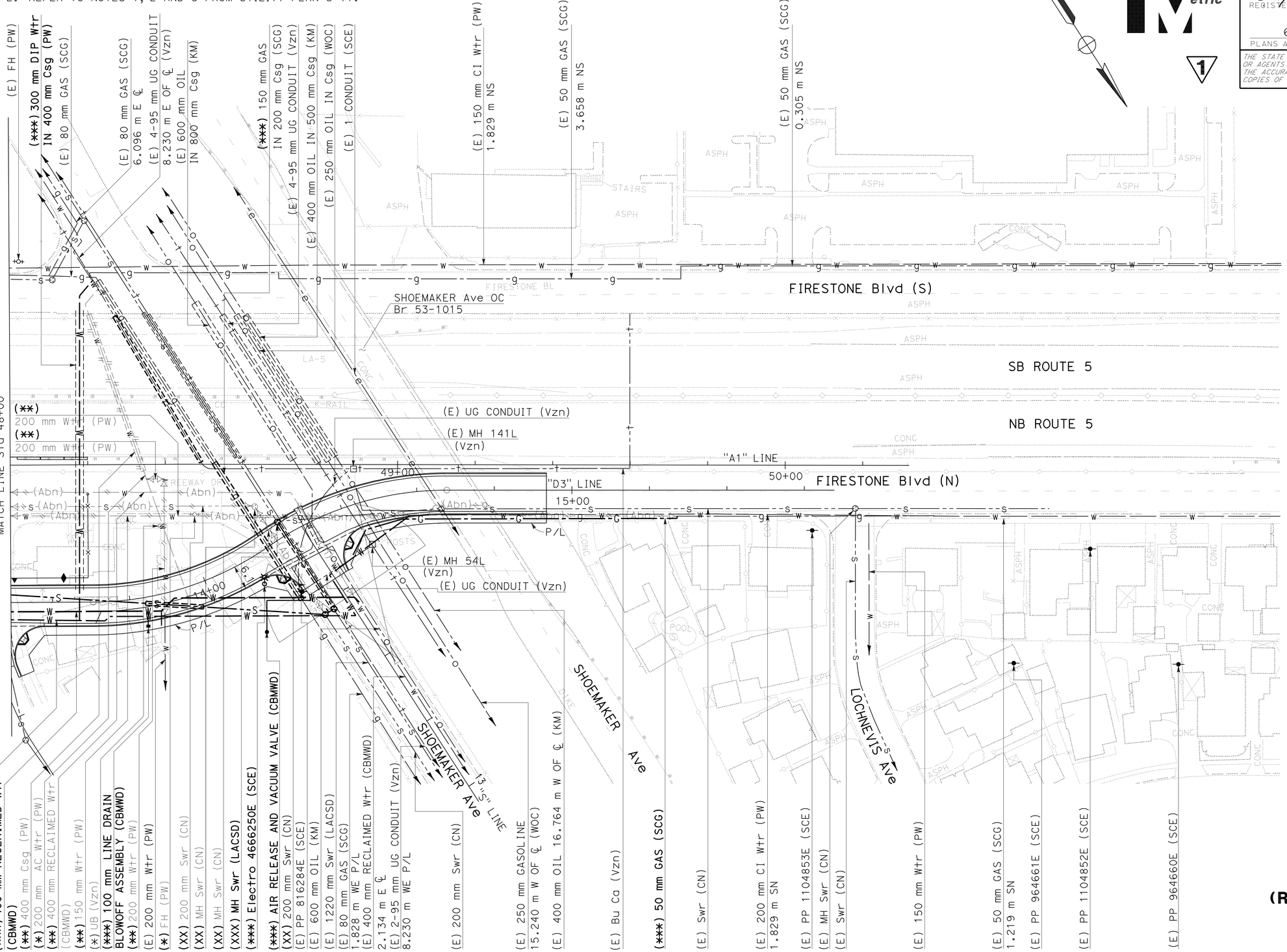

THIS PLAN FOR UTILITY INFORMATION ONLY

ALL DIMENSIONS ARE IN METERS UNLESS OTHERWISE SHOWN

UTILITY PLAN (RELOCATION UTILITIES)

SCALE 1:500

U-23

STATE OF CALIFORNIA - DEPARTMENT OF TRANSPORTATION
Caltrans OFFICE OF DESIGN A

FUNCTIONAL SUPERVISOR: HAYKAZ AGHAJANIAN
CALCULATED-DESIGNED BY: HAYKAZ AGHAJANIAN
CHECKED BY: NGIM NANCY PE
REVISED BY
DATE REVISED

LAST REVISION 00-00-00
DATE PLOTTED => 20-APR-2011
TIME PLOTTED => 10:39

72159cka023.add

BORDER LAST REVISED 3/1/2007

RELATIVE BORDER SCALE IS IN MILLIMETERS 0 20 40 60 80

USERNAME => trmnguye
DGN FILE => 72159cka023.add

CU 07328

EA 2159C1

NOTE:
1. FOR ACCURATE RIGHT OF WAY DATA, CONTACT RIGHT OF WAY ENGINEERING AT THE DISTRICT OFFICE.
2. REFER TO NOTES 1, 2 AND 3 OF UTILITY P/LAN U-17.

1 REVISED PER ADDENDUM No. 1 DATED APRIL 21, 2011

Caltrans Metric

Dist	COUNTY	ROUTE	KILOMETER POST TOTAL PROJECT	SHEET No.	TOTAL SHEETS
07	LA	5	2.9/4.9	410	1082

REGISTERED CIVIL ENGINEER 12-23-09 DATE

6-21-10
P/LAN APPROVAL DATE

REGISTERED PROFESSIONAL ENGINEER HAYKAZ AGHAJANIAN No. C53866 Exp. 12-31-11 CIVIL STATE OF CALIFORNIA

THE STATE OF CALIFORNIA OR ITS OFFICERS OR AGENTS SHALL NOT BE RESPONSIBLE FOR THE ACCURACY OR COMPLETENESS OF ELECTRONIC COPIES OF THIS P/LAN SHEET.

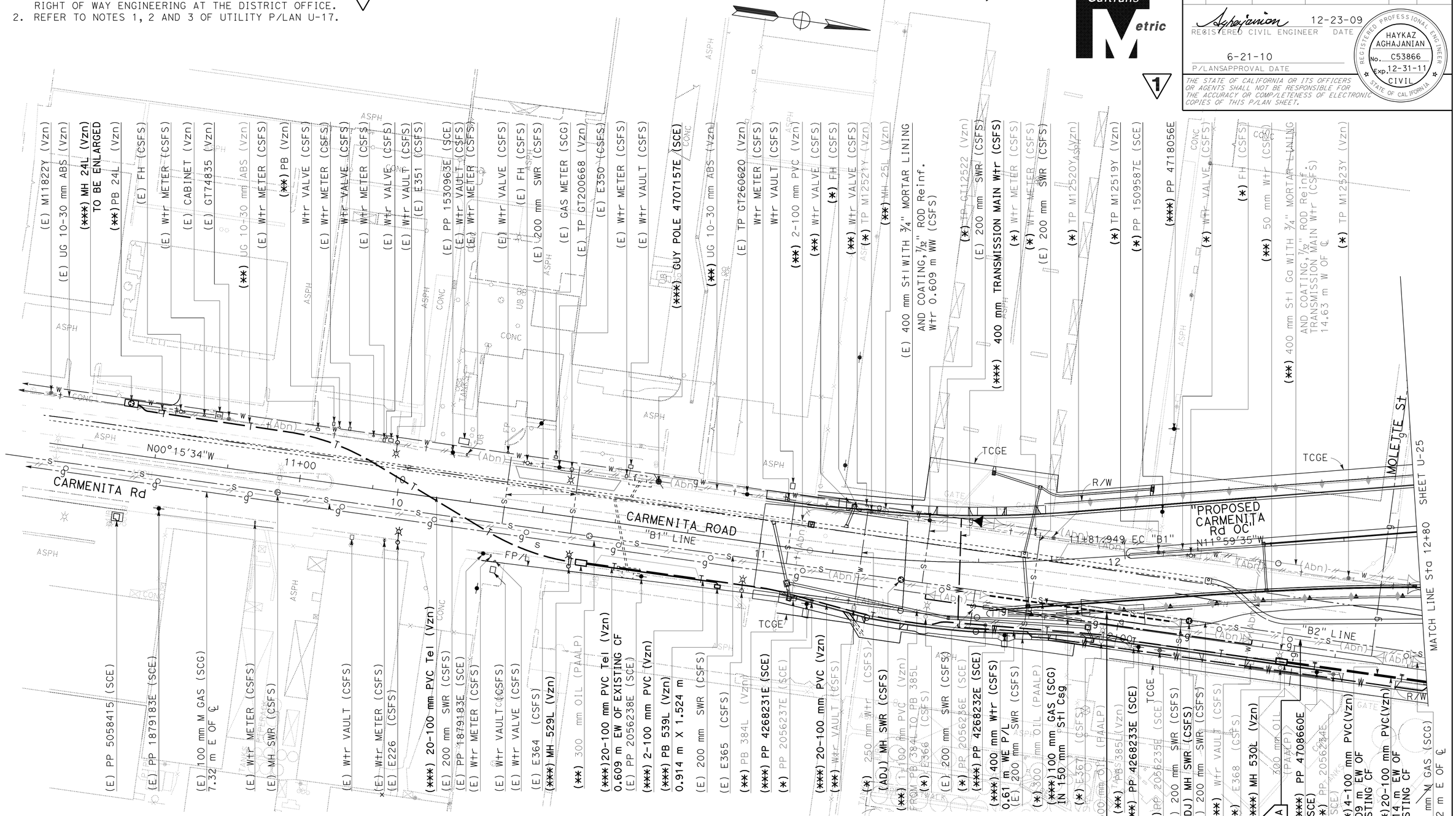

TELEPHONE MANHOLE (Vzn) :
(MH 529L) : 3.048 m X 1.524 m X 1.981 m
(MH 530L) : 3.048 m X 1.524 m X 1.981 m

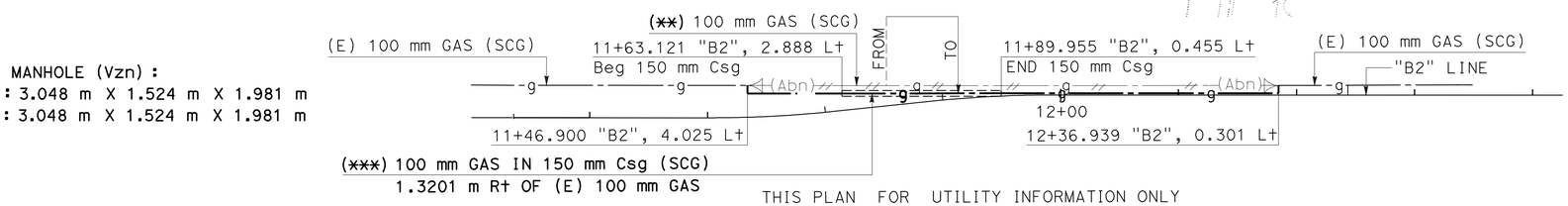

THIS PLAN FOR UTILITY INFORMATION ONLY

ALL DIMENSIONS ARE IN METERS UNLESS OTHERWISE SHOWN

UTILITY P/LAN
(RELOCATION UTILITIES)

SCALE 1:500 **U-24**

CALCULATED-DESIGNED BY	HAYKAZ AGHAJANIAN
CHECKED BY	NGIM NANCY PE
REVISED BY	KN
DATE REVISED	9/09
FUNCTIONAL SUPERVISOR	HAYKAZ AGHAJANIAN

STATE OF CALIFORNIA - DEPARTMENT OF TRANSPORTATION
Caltrans OFFICE OF DESIGN A

LAST REVISION 00-00-00 DATE P/LOTTED => 20-APR-2011 TIME P/LOTTED => 10:39

72159cka024.dgn

NOTE: 1. FOR ACCURATE RIGHT OF WAY DATA, CONTACT RIGHT OF ENGINEERING AT THE DISTRICT OFFICE.
2. REFER TO NOTES 1, 2 AND 3 FROM UTILITY P/LAN U-17.

Dist	COUNTY	ROUTE	KILOMETER POST TOTAL PROJECT	SHEET No.	TOTAL SHEETS
07	LA	5	2.9/4.9	411	1082

Aghajanian 12-23-09
REGISTERED CIVIL ENGINEER DATE

6-21-10
P/LANSAPPROVAL DATE

REGISTERED PROFESSIONAL ENGINEER HAYKAZ AGHAJANIAN No. C53866 Exp. 12-31-11 CIVIL STATE OF CALIFORNIA

THE STATE OF CALIFORNIA OR ITS OFFICERS OR AGENTS SHALL NOT BE RESPONSIBLE FOR THE ACCURACY OR COMP/LETENESS OF ELECTRONIC COPIES OF THIS P/LAN SHEET.

Caltrans Metric

THIS PLAN FOR UTILITY INFORMATION ONLY

1 REVISED PER ADDENDUM No. 1 DATED APRIL 21, 2011

ALL DIMENSIONS ARE IN METERS UNLESS OTHERWISE SHOWN

UTILITY P/LAN
(RELOCATION UTILITIES)

SCALE 1:500

U-25

STATE OF CALIFORNIA - DEPARTMENT OF TRANSPORTATION
OFFICE OF DESIGN A
Caltrans

FUNCTIONAL SUPERVISOR	CALCULATED-DESIGNED BY	CHECKED BY	REVISED BY	DATE REVISED
HAYKAZ AGHAJANIAN	HAYKAZ AGHAJANIAN	NGIM NANCY PE		

LAST REVISION 00-00-00
DATE P/LOTTED => 20-APR-2011
TIME P/LOTTED => 10:39

Dist	COUNTY	ROUTE	KILOMETER POST TOTAL PROJECT	SHEET No.	TOTAL SHEETS
07	LA	5	2.9/4.9	412	1082

REGISTERED CIVIL ENGINEER 12-23-09 DATE

6-21-10
PLANS APPROVAL DATE

REGISTERED PROFESSIONAL ENGINEER HAYKAZ AGHAJANIAN No. C53866 Exp. 12-31-11 CIVIL STATE OF CALIFORNIA

THE STATE OF CALIFORNIA OR ITS OFFICERS OR AGENTS SHALL NOT BE RESPONSIBLE FOR THE ACCURACY OR COMPLETENESS OF ELECTRONIC COPIES OF THIS PLAN SHEET.

1 **REVISED PER ADDENDUM No. 1 DATED APRIL 21, 2011**

Caltrans Metric

NOTE:
1. FOR ACCURATE RIGHT OF WAY DATA, CONTACT RIGHT OF ENGINEERING AT THE DISTRICT OFFICE.
2. REFER TO NOTES 1, 2, AND 3 FROM UTILITY PLAN U-17.

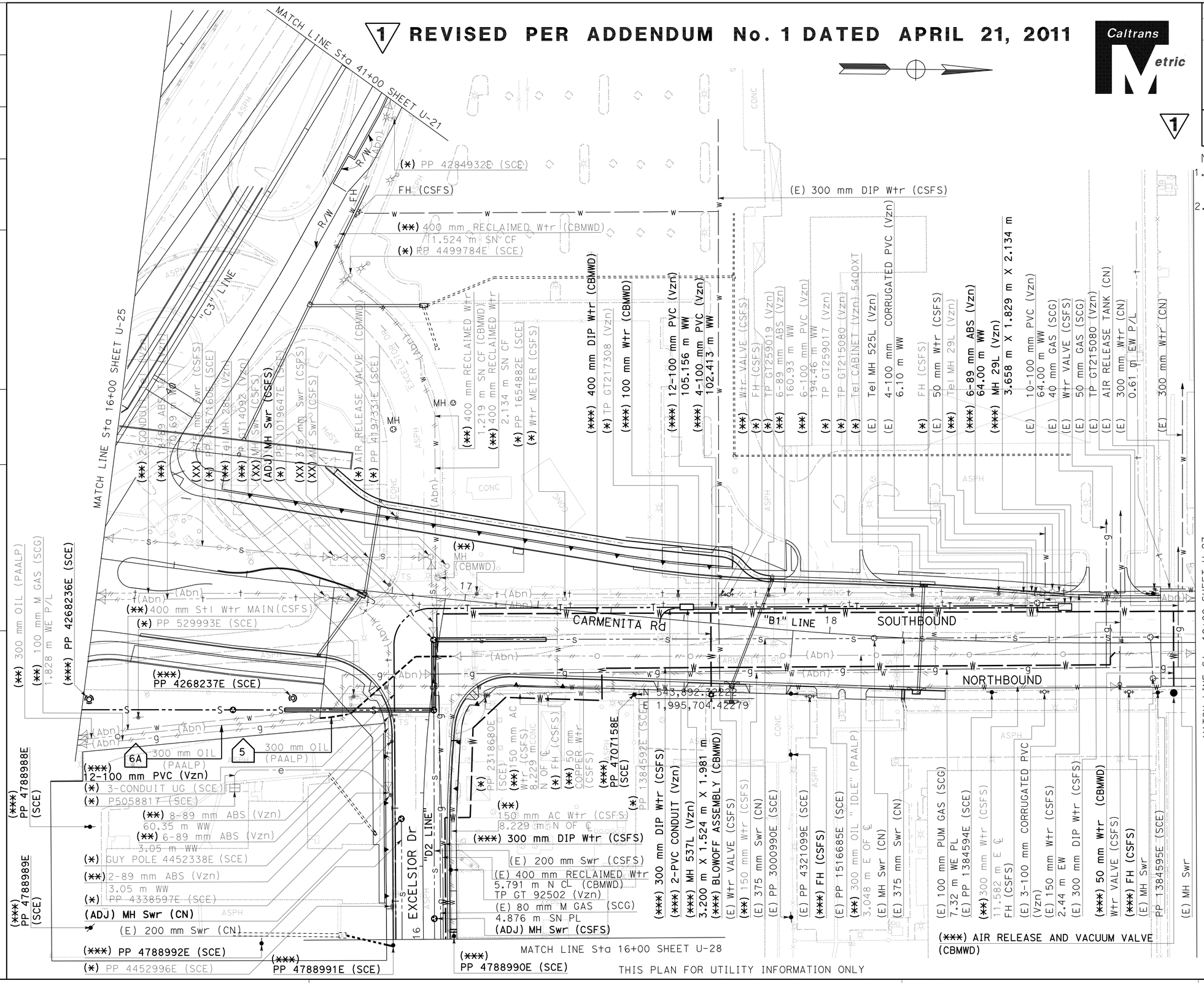

ALL DIMENSIONS ARE IN METERS UNLESS OTHERWISE SHOWN

UTILITY PLAN (RELOCATION UTILITIES)

SCALE 1:500

U-26

STATE OF CALIFORNIA - DEPARTMENT OF TRANSPORTATION
Caltrans **OFFICE OF DESIGN A**

FUNCTIONAL SUPERVISOR: HAYKAZ AGHAJANIAN
CALCULATED-DESIGNED BY: HAYKAZ AGHAJANIAN
CHECKED BY: NGIM NANCY PE
REVISED BY / DATE REVISED

LAST REVISION 00-00-00 | DATE PLOTTED => 20-APR-2011 | TIME PLOTTED => 10:40

Dist	COUNTY	ROUTE	KILOMETER POST TOTAL PROJECT	SHEET No.	TOTAL SHEETS
07	LA	5	2.9/4.9	413	1082

REGISTERED CIVIL ENGINEER 12-23-09 DATE

6-21-10
PLANS APPROVAL DATE

REGISTERED PROFESSIONAL ENGINEER HAYKAZ AGHAJANIAN No. C53866 Exp. 12-31-11 CIVIL STATE OF CALIFORNIA

THE STATE OF CALIFORNIA OR ITS OFFICERS OR AGENTS SHALL NOT BE RESPONSIBLE FOR THE ACCURACY OR COMPLETENESS OF ELECTRONIC COPIES OF THIS PLAN SHEET.

Caltrans Metric

1

NOTE:

1. FOR ACCURATE RIGHT OF WAY DATA, CONTACT RIGHT OF WAY ENGINEERING AT THE DISTRICT OFFICE.
2. REFER TO NOTES 1, 2 AND 3 FROM UTILITY PLAN U-17.

QUANTITIES
PLAINS ALL AMERICAN PIPIELINE, L.P.

UTILITY PLAN	UTILITY TYPE	UTILITY NUMBER #	STATION ("B1") LINE ALIGNMENT	REMOVED PIPE (+) m	DISPOSAL OF HAZARDOUS MATERIAL m3
U-24	300 mm OIL (PAALP)	1	11+62.914 9.127 Rt. TO 12+11.350 18.774 Rt.	50	1706
U-25		2	13+51.240 56.138 Rt. TO 13+59.843 57.412 Rt.	8	
U-25		3	14+31.351 64.150 Rt. TO 14+48.960 64.775 Rt.	16	
U-25		4	15+51.389 59.377 Rt. TO 15+79.023 55.241 Rt.	24	
U-26		5	16+64.125 35.949 Rt. TO 16+97.875 15.490 Rt.	42	
TOTAL				140	1706

UTILITY PLAN	UTILITY TYPE	UTILITY NUMBER #A	STATION ("B1") LINE ALIGNMENT	ABANDONED PIPE (++) m
U-24	300 mm OIL (PAALP)	1A	12+11.350 18.774 Rt. TO 12+80.000 33.155 Rt.	70
U-25		2A	12+80.000 33.155 Rt. TO 13+51.248 56.138 Rt.	257
U-25		3A	13+59.843 57.412 Rt. TO 14+31.351 64.150 Rt.	
U-25		4A	14+48.960 64.775 Rt. TO 15+55.388 59.377 Rt.	
U-25		5A	15+79.023 55.241 Rt. TO 16+00.000 50.018 Rt.	
U-26		6A	16+00.000 50.018 Rt. TO 16+64.125 35.949 Rt.	67
TOTAL				394

(+) 300 mm OIL LINE (PAALP) WILL BE CUT AND CAPPED DURING CONSTRUCTION BY CONTRACTOR.
(++) 300 mm OIL LINE (PAALP) WILL BE ABANDONED IN PLACE DURING CONSTRUCTION BY CONTRACTOR.

QUANTITIES
CITY OF SANTA FE SPRINGS WATER

UTILITY PLAN	UTILITY TYPE	UTILITY NUMBER #	STATION "A1" LINE ALIGNMENT	REMOVE ABESTOS CEMENT PIPES (+++) m
U-17	300 mm AC	1	27+88.331 28.764 Rt. TO 28+82.935 29.903 Rt.	94.693
U-19	300 mm AC	2	37+00.118 49.238 Rt. TO 37+20.000 48.486 Rt.	19.719
U-20	300 mm AC	3	37+20.000 48.486 Rt. TO 38+76.307 46.243 Rt.	155.085
U-20	200 mm AC	4	38+76.307 46.243 Rt. TO 39+63.446 51.015 Rt.	86.994
U-20	300 mm AC	5	37+86.301 118.423 Lt. TO 41+00.000 29.419 Lt.	376.301
U-21	300 mm AC	6	41+00.000 29.419 Lt. TO 43+80.175 43.540 Lt.	280.527
U-25	300 mm AC	7	37+86.301 118.423 Lt. TO 38+00.953 203.172 Lt.	119.555
TOTAL				1132.874

(+++) ABESTOS CEMENT PIPE (CSFS) WILL BE CUT, CAPPED, AND REMOVED DURING CONSTRUCTION BY CONTRACTOR.

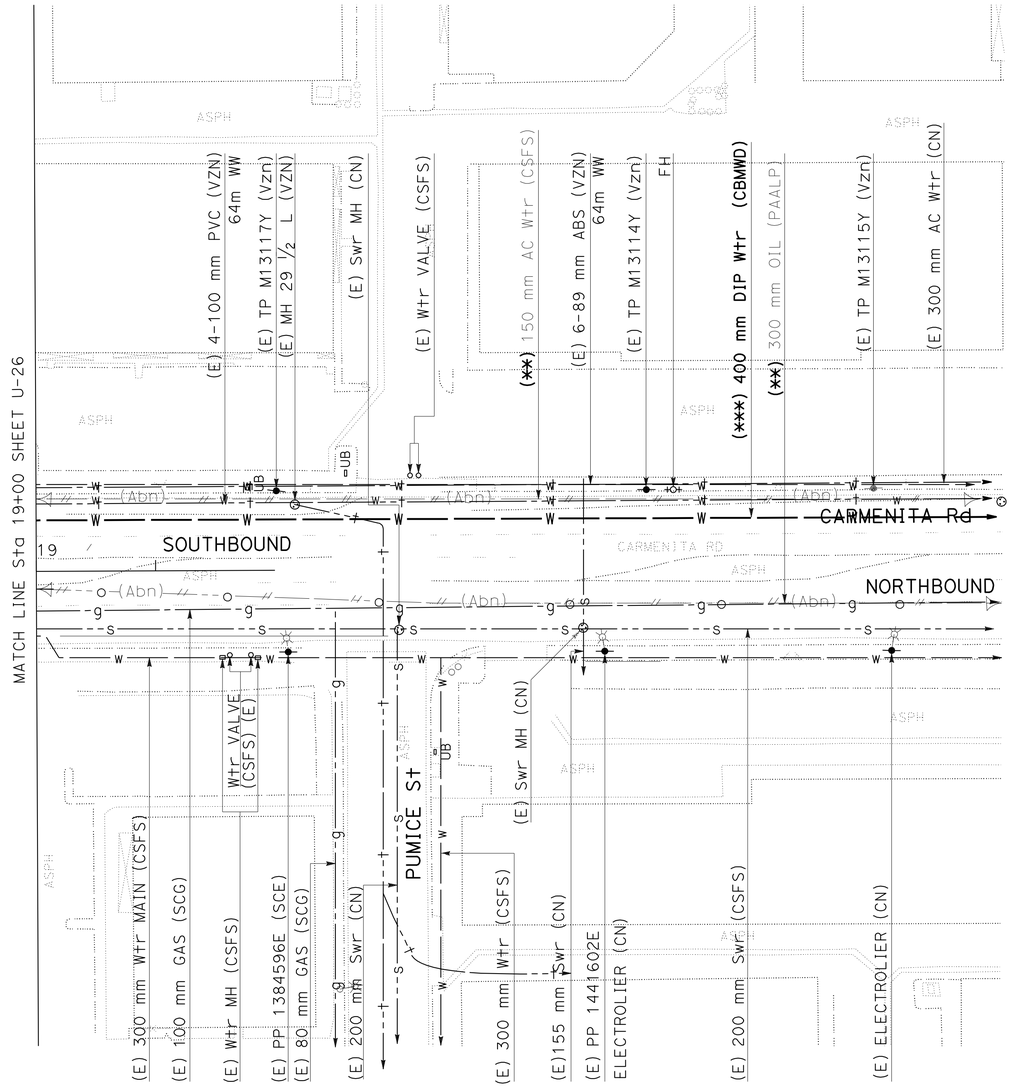

ALL DIMENSIONS ARE IN METERS UNLESS OTHERWISE SHOWN

UTILITY PLAN
(EXISTING UTILITIES)

SCALE 1:500

U-27

1 REVISED PER ADDENDUM No. 1 DATED APRIL 21, 2011

THIS PLAN FOR UTILITIY INFORMATION ONLY

REVISED BY | DATE REVISED
HAYKAZ AGHAJANIAN | NGIM NANCY PE
CALCULATED-DESIGNED BY | CHECKED BY
FUNCTIONAL SUPERVISOR
HAYKAZ AGHAJANIAN

STATE OF CALIFORNIA - DEPARTMENT OF TRANSPORTATION
Caltrans OFFICE OF DESIGN A

LAST REVISION 00-00-00 | DATE PLOTTED => 20-APR-2011 | TIME PLOTTED => 10:40

Dist	COUNTY	ROUTE	KILOMETER POST TOTAL PROJECT	SHEET No.	TOTAL SHEETS
07	LA	5	2.9/4.9	414	1082

REGISTERED CIVIL ENGINEER — DATE 12-23-09

6-21-10
PLANS APPROVAL DATE

REGISTERED PROFESSIONAL ENGINEER HAYKAZ AGHAJANIAN No. C53866 Exp. 12-31-11 CIVIL STATE OF CALIFORNIA

THE STATE OF CALIFORNIA OR ITS OFFICERS OR AGENTS SHALL NOT BE RESPONSIBLE FOR THE ACCURACY OR COMPLETENESS OF ELECTRONIC COPIES OF THIS PLAN SHEET.

Caltrans Metric

1

NOTE:

1. FOR ACCURATE RIGHT OF WAY DATA, CONTACT RIGHT OF WAY ENGINEERING AT THE DISTRICT OFFICE.
2. REFER TO NOTES 1, 2, AND 3 FROM UTILITY PLAN U-17.

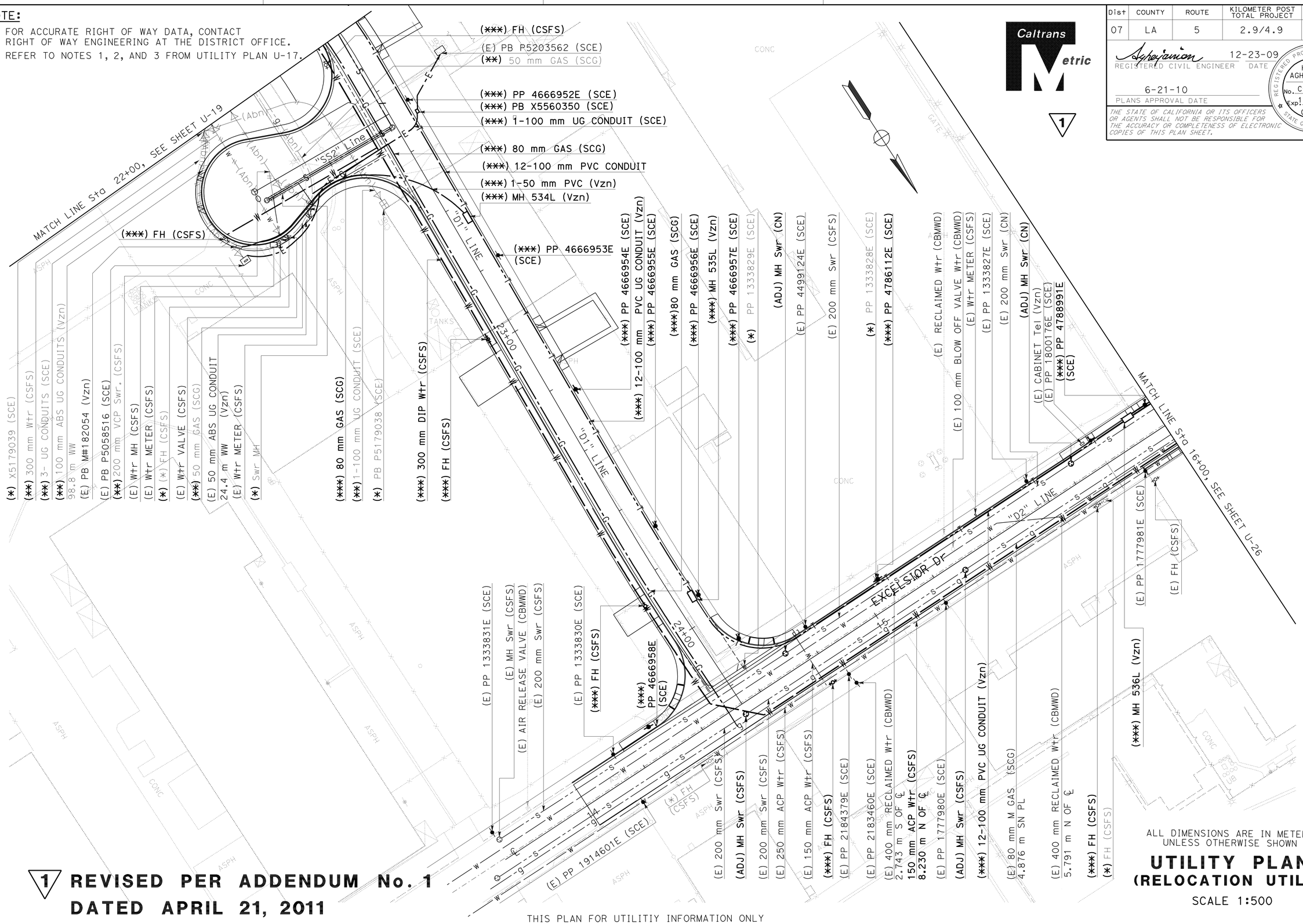

ALL DIMENSIONS ARE IN METERS UNLESS OTHERWISE SHOWN

UTILITY PLAN (RELOCATION UTILITIES)

SCALE 1:500

U-28

1 REVISED PER ADDENDUM No. 1 DATED APRIL 21, 2011

THIS PLAN FOR UTILITIY INFORMATION ONLY

STATE OF CALIFORNIA - DEPARTMENT OF TRANSPORTATION
Caltrans OFFICE OF DESIGN A

FUNCTIONAL SUPERVISOR: HAYKAZ AGHAJANIAN
CALCULATED-DESIGNED BY: HAYKAZ AGHAJANIAN
CHECKED BY: NGIM NANCY PE
REVISED BY
DATE REVISED

LAST REVISION 00-00-00
DATE PLOTTED => 20-APR-2011
TIME PLOTTED => 13:40

Dist	COUNTY	ROUTE	KILOMETER POST TOTAL PROJECT	SHEET No.	TOTAL SHEETS
07	LA	5	2.9/4.9	495	1082

REGISTERED CIVIL ENGINEER 12-23-09 DATE

6-21-10
PLANS APPROVAL DATE

REGISTERED PROFESSIONAL ENGINEER NGIM NANCY PE No. 58161 Exp. 6-30-10 CIVIL STATE OF CALIFORNIA

THE STATE OF CALIFORNIA OR ITS OFFICERS OR AGENTS SHALL NOT BE RESPONSIBLE FOR THE ACCURACY OR COMPLETENESS OF ELECTRONIC COPIES OF THIS PLAN SHEET.

Caltrans Metric

1

NOTE:

TEMPORARY SOUTHBOUND OFF-RAMP AND FIRESTONE Blvd (SOUTH) CLOSED DURING THIS PHASE.

(11) M4-9L(Mod)

(12) M4-9R(Mod)

SIGNS M4-9L(Mod) & M4-9R(Mod):
75 mm RADIUS,
35 mm BORDER,
20 mm INDENT,
BLACK ON ORANGE;
"CARMENITA RD"
150 mm C CAP;
"DETOUR"
200 mm D CAP;
ARROW 150 CAP-1L-324 mm

Temp RAILING (TYPE K) FROM STAGE 3 PHASE 2

CHANNELIZER (SURFACE MOUNTED) (Tot 7 @ 4.6 m C-C)

CARMENITA PLACE

MOLETTE St

"E2" LINE

ARCTIC CIRCLE

"E3" LINE

UPRR TRACKS

CARMENITA Rd OC / OH

SPECIAL SIGN (BUDGET INN (W/ Lt ARROW)

SPECIAL SIGN (BUDGET INN (W/ARROW)

"B2" LINE

TRAFFIC CONE (Tot=24 @ 6.1 m C-C)

R11-2 5-TYPE III BARRICADE

"B1" LINE

19+35.50 "E1"
℄ Temp Dwy, W=9.75 m
150 mm HMA (TYPE B)

R11-2 2-TYPE III BARRICADE

R11-2 3-TYPE III BARRICADE

R11-2 2-TYPE III BARRICADE

FIRESTONE Blvd (SOUTH)

"E1" LINE

"C1" LINE

"C4" LINE

SB OFF-RAMP

SB ON-RAMP

36+00 37+00 38+00 39+00 19+00 20+00 21+00 0+00 1+00 2+00 12+00 13+00

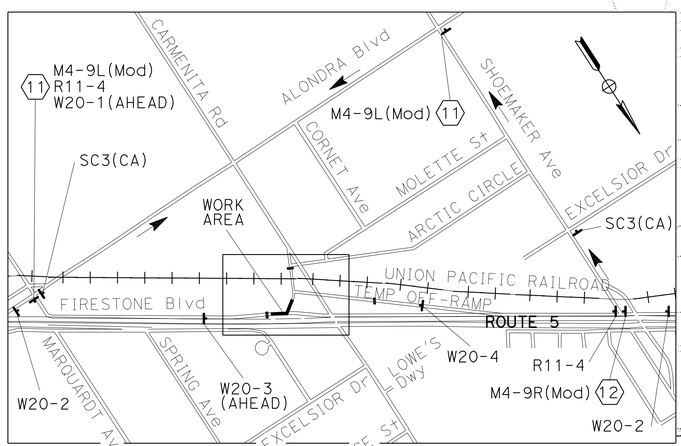

ALL DIMENSIONS ARE IN METERS UNLESS OTHERWISE SHOWN

STAGE 3 PHASE 2A

STAGE CONSTRUCTION AND TRAFFIC HANDLING PLAN

SCALE 1:500

SC-80

1 **REVISED PER ADDENDUM No. 1 DATED APRIL 21, 2011**

THIS PLAN ACCURATE FOR STAGE CONSTRUCTION AND TRAFFIC HANDLING ONLY.

REVISED BY	DATE REVISED

CALCULATED-DESIGNED BY: WILL CARPIO
CHECKED BY: NGIM NANCY PE
FUNCTIONAL SUPERVISOR: NGIM NANCY PE

STATE OF CALIFORNIA - DEPARTMENT OF TRANSPORTATION
Caltrans OFFICE OF DESIGN A

72159cma080.add

LAST REVISION 00-00-00 | DATE PLOTTED => 20-APR-2011 | TIME PLOTTED => 13:14

BORDER LAST REVISED 3/1/2007 | RELATIVE BORDER SCALE IS IN MILLIMETERS 0 20 40 60 80 | USERNAME => trmikesl | DGN FILE => 72159cma080.add | CU 07225 | EA 2159C1

Dist	COUNTY	ROUTE	KILOMETER POST TOTAL PROJECT	SHEET No.	TOTAL SHEETS
07	LA	5	2.9/4.9	496	1082

REGISTERED CIVIL ENGINEER 12-23-09 DATE

6-21-10
PLANS APPROVAL DATE

REGISTERED PROFESSIONAL ENGINEER NGIM NANCY PE No. 58161 Exp. 6-30-10 CIVIL STATE OF CALIFORNIA

THE STATE OF CALIFORNIA OR ITS OFFICERS OR AGENTS SHALL NOT BE RESPONSIBLE FOR THE ACCURACY OR COMPLETENESS OF ELECTRONIC COPIES OF THIS PLAN SHEET.

Caltrans Metric

1

NOTE:

TEMPORARY SOUTHBOUND OFF-RAMP CLOSED AND FIRESTONE Blvd (SOUTH) OPEN DURING THIS PHASE.

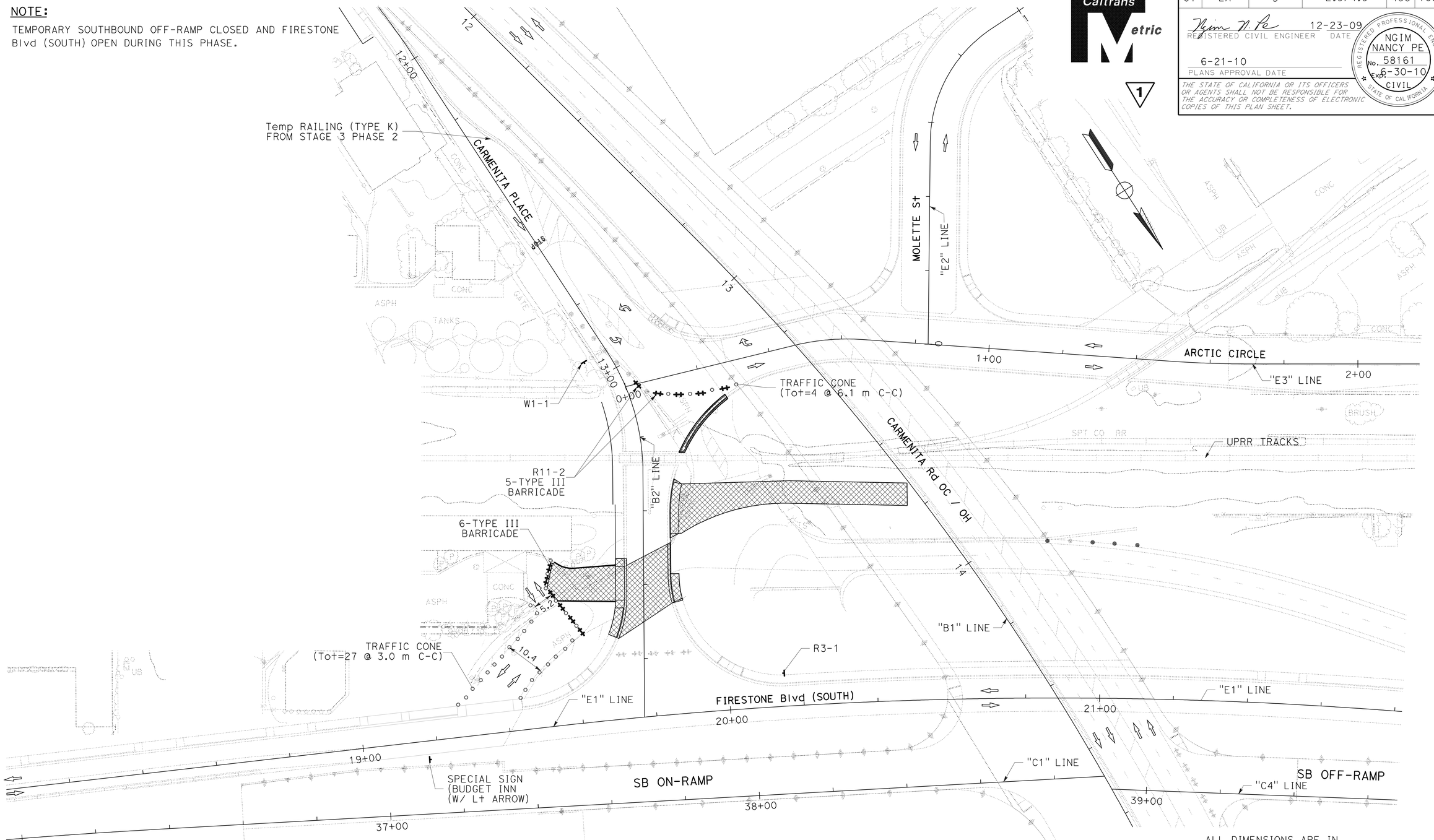

ALL DIMENSIONS ARE IN METERS UNLESS OTHERWISE SHOWN

STAGE 3 PHASE 2A

STAGE CONSTRUCTION AND TRAFFIC HANDLING PLAN

SCALE 1:500

SC-81

1 **REVISED PER ADDENDUM No. 1 DATED APRIL 21, 2011**

THIS PLAN ACCURATE FOR STAGE CONSTRUCTION AND TRAFFIC HANDLING ONLY.

REVISED BY	DATE REVISED

CALCULATED-DESIGNED BY: WILL CARPIO
CHECKED BY: NGIM NANCY PE
FUNCTIONAL SUPERVISOR: NGIM NANCY PE

STATE OF CALIFORNIA - DEPARTMENT OF TRANSPORTATION
Caltrans OFFICE OF DESIGN A

LAST REVISION 00-00-00 DATE PLOTTED => 20-APR-2011 TIME PLOTTED => 13:18

72159cma081.add

Dist	COUNTY	ROUTE	KILOMETER POST TOTAL PROJECT	SHEET No.	TOTAL SHEETS
07	LA	5	2.9/4.9	497	1082

REGISTERED CIVIL ENGINEER 12-23-09 DATE

6-21-10
PLANS APPROVAL DATE

REGISTERED PROFESSIONAL ENGINEER NGIM NANCY PE No. 58161 Exp. 6-30-10 CIVIL STATE OF CALIFORNIA

THE STATE OF CALIFORNIA OR ITS OFFICERS OR AGENTS SHALL NOT BE RESPONSIBLE FOR THE ACCURACY OR COMPLETENESS OF ELECTRONIC COPIES OF THIS PLAN SHEET.

Caltrans Metric

1

NOTE:

TEMPORARY SOUTHBOUND OFF-RAMP CLOSED DURING THIS PHASE.

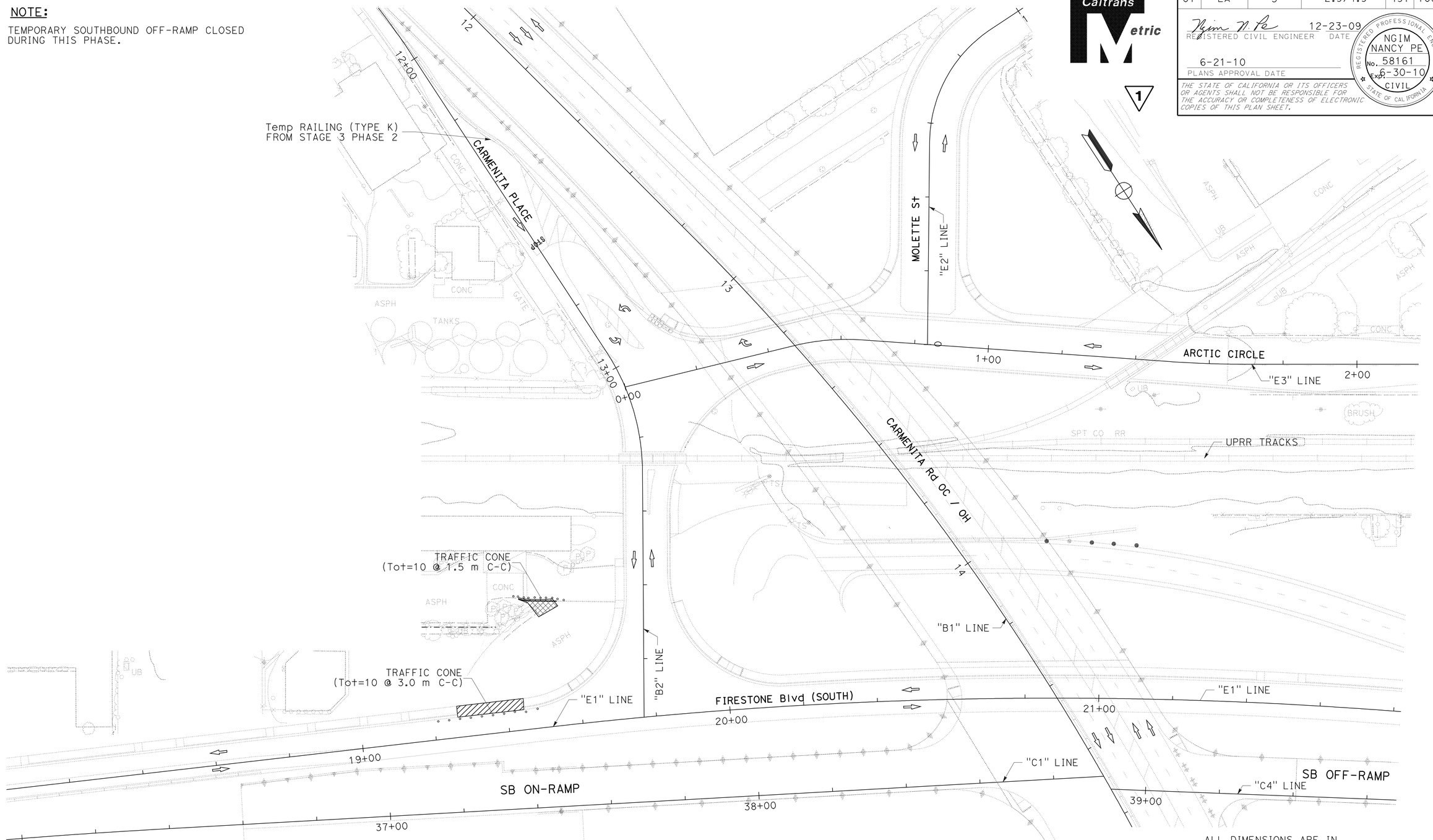

ALL DIMENSIONS ARE IN METERS UNLESS OTHERWISE SHOWN

STAGE 3 PHASE 2A

STAGE CONSTRUCTION AND TRAFFIC HANDLING PLAN

SCALE 1:500

SC-82

1 **REVISED PER ADDENDUM No. 1 DATED APRIL 21, 2011**

THIS PLAN ACCURATE FOR STAGE CONSTRUCTION AND TRAFFIC HANDLING ONLY.

CALCULATED-DESIGNED BY	WILL CARPIO	REVISED BY	
CHECKED BY	NGIM NANCY PE	DATE REVISED	
FUNCTIONAL SUPERVISOR	NGIM NANCY PE		

STATE OF CALIFORNIA - DEPARTMENT OF TRANSPORTATION
Caltrans OFFICE OF DESIGN A

72159cma082.add

LAST REVISION 00-00-00 DATE PLOTTED => 20-APR-2011 TIME PLOTTED => 13:18

Dist	COUNTY	ROUTE	KILOMETER POST TOTAL PROJECT	SHEET No.	TOTAL SHEETS
07	LA	5	2.9/4.9	503	1082

REGISTERED CIVIL ENGINEER 12-23-09 DATE

6-21-10
PLANS APPROVAL DATE

REGISTERED PROFESSIONAL ENGINEER
NGIM
NANCY PE
No. 58161
Exp. 6-30-10
CIVIL
STATE OF CALIFORNIA

THE STATE OF CALIFORNIA OR ITS OFFICERS OR AGENTS SHALL NOT BE RESPONSIBLE FOR THE ACCURACY OR COMPLETENESS OF ELECTRONIC COPIES OF THIS PLAN SHEET.

Caltrans Metric

1

ALL DIMENSIONS ARE IN METERS UNLESS OTHERWISE SHOWN

STAGE 3 PHASE 3
STAGE CONSTRUCTION AND TRAFFIC HANDLING PLAN

SCALE 1:500

SC-88

1 **REVISED PER ADDENDUM No. 1 DATED APRIL 21, 2011**

THIS PLAN ACCURATE FOR STAGE CONSTRUCTION AND TRAFFIC HANDLING ONLY.

REVISED BY	DATE REVISED

CALCULATED-DESIGNED BY: WILL CARPIO
CHECKED BY: NGIM NANCY PE
FUNCTIONAL SUPERVISOR: NGIM NANCY PE

STATE OF CALIFORNIA - DEPARTMENT OF TRANSPORTATION
Caltrans OFFICE OF DESIGN A

72159cma088.add

LAST REVISION 00-00-00 | DATE PLOTTED => 20-APR-2011 | TIME PLOTTED => 13:18

Dist	COUNTY	ROUTE	KILOMETER POST TOTAL PROJECT	SHEET No.	TOTAL SHEETS
07	LA	5	2.9/4.9	536	1082

REGISTERED CIVIL ENGINEER 12-23-09 DATE

6-21-10
PLANS APPROVAL DATE

REGISTERED PROFESSIONAL ENGINEER NGIM NANCY PE No. 58161 Exp. 6-30-10 CIVIL STATE OF CALIFORNIA

THE STATE OF CALIFORNIA OR ITS OFFICERS OR AGENTS SHALL NOT BE RESPONSIBLE FOR THE ACCURACY OR COMPLETENESS OF ELECTRONIC COPIES OF THIS PLAN SHEET.

Caltrans Metric

1

SHEET No.	ALIGNMENT	LOCATION	IMPORTED BORROW	ROADWAY EXCAVATION	REMOVE CHAIN LINK FENCE (TYPE CL-1.8)	TEMPORARY FENCE (TYPE CL-1.8)	TEMPORARY RAILING (TYPE K)	3.7 m TEMPORARY CHAIN LINK GATE (TYPE CL-1.8)	6.1 m TEMPORARY CHAIN LINK GATE (TYPE CL-1.8)	7.3 m TEMPORARY ROLLING CHAIN LINK GATE (TYPE CL-1.8)	9.14 m TEMPORARY ROLLING CHAIN LINK GATE (TYPE CL-1.8)	11.0 m TEMPORARY ROLLING CHAIN LINK GATE (TYPE CL-1.8)	18.29 m TEMPORARY ROLLING CHAIN LINK GATE (TYPE CL-1.8)	19.81 m TEMPORARY ROLLING CHAIN LINK GATE (TYPE CL-1.8)	TEMPORARY CRASH CUSHION (TYPE ADIEM)	TEMPORARY CRASH CUSHION MODULES	PLACE HOT MIX ASPHALT DIKE (TYPE E)	HOT MIX ASPHALT (TYPE B)	COLD PLANE AC PAVEMENT (45 mm MAXIMUM)	CLASS 2 AGGREGATE BASE	CLASS 4 AGGREGATE SUBBASE	RELOCATE TEMPORARY RAILING (TYPE K)	TYPE II BARRICADE	TYPE III BARRICADE	CHANNELIZER (SURFACE MOUNTED)	TRAFFIC CONES	FLASHING ARROW BOARD (N)
			m^3	m^3	m	m	m	m	m	m	m	m	m	m	EA	EA	m	TONNE	m^2	m^3	m^3	m	EA	EA	EA	EA	EA
STAGE 3 PHASE 2																											
SC-72	A2	Sta 27+07 TO 29+20																				233					
SC-73	TA13	Sta 29+90 TO 30+70																				80					
	TA13	Sta 29+20 TO 30+79																				159					
	TA13	Sta 29+20 TO 30+79																				97					
	TA13	Sta 30+10 TO 33+00		388																							
	E1	Sta 11+40 TO 15+06														11						366			9		
SC-74	E1	Sta 15+06 TO 18+72																				366					
	TA13	Sta 33+00 TO 36+80		338																							
SC-75	TA13	Sta 36+80 TO 37+50																				70					
	TA13	Sta 39+66 TO 40+60																				94					
	TA13	Sta 36+80 TO 40+60		262																							
	B1	Sta 15+16 TO 16+18																				55.3		6			
SC-76	TA12	Sta 42+85 TO 44+40																				155					
	TA13	Sta 40+60 TO 44+40		1064																		380					
	TA14	Sta 43+78 TO 44+40														14						62			21		
	TA15	Sta 25+47 TO 26+60																				113					
SC-77	TA12	Sta 44+40 TO 46+98		102												14						292			10		
	TA13	Sta 44+40 TO 48+20																				358			5		
	TA15	Sta 26+56 TO 27+10														14						54			8		
STAGE 3 PHASE 2 TOTAL				2154												53						2934.3		6	53		
SC-80		VARIOUS LOCATIONS																						12	7	24	
SC-81		VARIOUS LOCATIONS																						11		31	
SC-82		VARIOUS LOCATIONS																								20	
STAGE 3 PHASE 2A TOTAL																								13	7	75	
SC-83	B1	VARIOUS LOCATIONS																						8			
STAGE 3 PHASE 2B TOTAL																								8			

(N) - NOT A SEPARATE PAY ITEM, FOR INFORMATION ONLY.

1 **REVISED PER ADDENDUM No. 1 DATED APRIL 21, 2011**

STAGE CONSTRUCTION AND TRAFFIC HANDLING QUANTITIES

SCQ-7

WILL CARPIO — REVISED BY
NGIM NANCY PE — DATE REVISED
CALCULATED-DESIGNED BY
CHECKED BY
FUNCTIONAL SUPERVISOR
NGIM NANCY PE

STATE OF CALIFORNIA - DEPARTMENT OF TRANSPORTATION
Caltrans OFFICE OF DESIGN A

72159cmc007.add

LAST REVISION 00-00-00
DATE PLOTTED => 20-APR-2011
TIME PLOTTED => 13:19

Dist	COUNTY	ROUTE	KILOMETER POST TOTAL PROJECT	SHEET No.	TOTAL SHEETS
07	LA	5	2.9/4.9	537	1082

REGISTERED CIVIL ENGINEER 12-23-09 DATE

6-21-10
PLANS APPROVAL DATE

REGISTERED PROFESSIONAL ENGINEER NGIM NANCY PE No. 58161 Exp. 6-30-10 CIVIL STATE OF CALIFORNIA

THE STATE OF CALIFORNIA OR ITS OFFICERS OR AGENTS SHALL NOT BE RESPONSIBLE FOR THE ACCURACY OR COMPLETENESS OF ELECTRONIC COPIES OF THIS PLAN SHEET.

Caltrans Metric

1

SHEET No.	ALIGNMENT	LOCATION	IMPORTED BORROW	ROADWAY EXCAVATION	REMOVE CHAIN LINK FENCE (TYPE CL-1.8)	TEMPORARY FENCE (TYPE CL-1.8)	TEMPORARY RAILING (TYPE K)	3.7 m TEMPORARY CHAIN LINK GATE (TYPE CL-1.8)	6.1 m TEMPORARY CHAIN LINK GATE (TYPE CL-1.8)	7.3 m TEMPORARY ROLLING CHAIN LINK GATE (TYPE CL-1.8)	9.14 m TEMPORARY ROLLING CHAIN LINK GATE (TYPE CL-1.8)	11.0 m TEMPORARY ROLLING CHAIN LINK GATE (TYPE CL-1.8)	18.29 m TEMPORARY ROLLING CHAIN LINK GATE (TYPE CL-1.8)	19.81 m TEMPORARY ROLLING CHAIN LINK GATE (TYPE CL-1.8)	TEMPORARY CRASH CUSHION (TYPE ADIEM)	TEMPORARY CRASH CUSHION MODULES	HOT MIX ASPHALT DIKE (TYPE E)	PLACE HOT MIX ASPHALT (TYPE B)	COLD PLANE AC PAVEMENT (45 mm MAXIMUM)	CLASS 2 AGGREGATE BASE	CLASS 4 AGGREGATE SUBBASE	RELOCATE TEMPORARY RAILING (TYPE K)	TYPE II BARRICADE	TYPE III BARRICADE	CHANNELIZER (SURFACE MOUNTED)	TRAFFIC CONES	FLASHING ARROW BOARD (N)
			m^3	m^3	m	m	m	m	m	m	m	m	m	m	EA	EA	m	TONNE	m^2	m^3	m^3	m	EA	EA	EA	EA	EA
STAGE 3 PHASE 3																											
SC-84	TA1	Sta 18+61		923.8																							
	E1	Sta 27+80																							14		
SC-85	TA1	Sta 27+80 TO 29+20		226.6																							
	E1	Sta 29+00 TO 29+20														11						306			54		
SC-86	E1	Sta 26+55 TO 27+45																				90					
	TA16	Sta 44+40 TO 44+88																				48			5		
SC-88	D2	Sta 16+00.5 TO 16+18.6				10.8				1																	
STAGE 3 PHASE 3 TOTAL				1150.4		10.8				1						11						444			73		
SCD-1		VARIES															50	66.4		43.7	50.5				6		
SCD-3		VARIES																					5	8		20	1
SCD-4		VARIES																					4	6		37	
SCD-5		VARIES																					5	15		35	
SCD-6		VARIES																						13		10	
SCD-7		VARIES																					2	7			
SCD-8		VARIES																					4	9			
SCD-9		VARIES																					1				
SCD-11		VARIES															80										
CONSTRUCTION DETAILS TOTAL																	130	66.4		43.7	50.5		21	58	6	102	1
GRAND TOTAL			223.6	10381.6	160	4026.9	11581.5	7	8	2	6	5	1	1	1	579	130	11005.2	5161	3789.5	4251.3	11002.2	58	142	641	173	1

(N) - NOT A SEPARATE ITEM, FOR INFORMATION ONLY.

1 **REVISED PER ADDENDUM No. 1 DATED APRIL 21, 2011**

STAGE CONSTRUCTION AND TRAFFIC HANDLING QUANTITIES
SCQ-8

CALCULATED-DESIGNED BY WILL CARPIO
CHECKED BY NGIM NANCY PE
REVISED BY
DATE REVISED
FUNCTIONAL SUPERVISOR NGIM NANCY PE

STATE OF CALIFORNIA - DEPARTMENT OF TRANSPORTATION
Caltrans OFFICE OF DESIGN A

72159cmc008.add

LAST REVISION 00-00-00 DATE PLOTTED => 20-APR-2011 TIME PLOTTED => 13:19

Dist	COUNTY	ROUTE	KILOMETER POST TOTAL PROJECT	SHEET No.	TOTAL SHEETS
07	LA	5	2.9/4.9	549	1082

REGISTERED CIVIL ENGINEER 12-23-09 DATE

6-21-10
PLANS APPROVAL DATE

REGISTERED PROFESSIONAL ENGINEER NGIM NANCY PE No. 58161 Exp. 6-30-10 CIVIL STATE OF CALIFORNIA

THE STATE OF CALIFORNIA OR ITS OFFICERS OR AGENTS SHALL NOT BE RESPONSIBLE FOR THE ACCURACY OR COMPLETENESS OF ELECTRONIC COPIES OF THIS PLAN SHEET.

Caltrans Metric

1

NOTE:
EXACT LOCATIONS AND POSITIONS OF ROADSIDE SIGNS WILL BE DETERMINED BY THE ENGINEER.

TRAFFIC HANDLING SIGNS

SHEET No.	No. OF SIGNS	SIGN CODE	PANEL SIZE (mm X mm)	POST SIZE (mm X mm)	ROADSIDE SIGN ONE POST EA	ROADSIDE SIGN TWO POST EA	BARRICADE (I) TYPE II EA	BARRICADE (I) TYPE III EA	STRAP & SADDLE BRACKET METHOD (N) EA	SIGN MESSAGE	REMARKS
SC-80	2	SPECIAL	600 X 600	89 X 89	1					BUDGET INN (W/ARROW)	
	3	R11-2	1200 X 750					3		ROAD CLOSED	
	1	M4-9L(Mod)	750 X 600	89 X 89	1					CARMENITA Rd DETOUR	BLACK ON ORANGE (RETROREFLECTIVE)
	1	M4-9R(Mod)	750 X 600	89 X 89	1					CARMENITA Rd DETOUR	BLACK ON ORANGE (RETROREFLECTIVE)
	1	M4-9L(Mod)	750 X 600	89 X 140		1				CARMENITA Rd DETOUR	
	1	R11-4	1500 X 750							ROAD CLOSED TO THRU TRAFFIC	
	2	SC3(CA)	900 X 300	89 X 89	1					DETOUR WITH ARROW	BLACK ON ORANGE (RETROREFLECTIVE)
	2	W20-2	900 X 900	89 X 140	1					DETOUR AHEAD	BLACK ON ORANGE (RETROREFLECTIVE)
	1	W20-1	900 X 900	89 X 140	1					ROAD WORK AHEAD	BLACK ON ORANGE (RETROREFLECTIVE)
	1	W20-3	900 X 900	89 X 89	1					ROAD CLOSED AHEAD	BLACK ON ORANGE (RETROREFLECTIVE)
	2	R11-4	1500 X 750	89 X 140		1				ROAD CLOSED TO THRU TRAFFIC	
	1	W20-4	900 X 900	89 X 140	1					ONE LANE ROAD AHEAD	BLACK ON ORANGE (RETROREFLECTIVE)
SC-82	1	SPECIAL	900 X 900	89 X 89	1					NO TURNS	
	1	R3-3	900 X 900	89 X 89	1					ROAD CLOSED AHEAD	
	1	W1-1L	900 X 900	89 X 89	1					CURVE (LEFT)	
	1	R11-2	1200 X 750					1		ROAD CLOSED	
SC-83	2	M4-9L(Mod)	750 X 600	89 X 89	1					CARMENITA Rd DETOUR	
	1	M4-9R(Mod)	750 X 600	89 X 89	1					CARMENITA Rd DETOUR	
	1	SC3(CA)	900 X 300	89 X 89	1					DETOUR WITH ARROW	
	1	SC3(CA)	900 X 300	89 X 89	1					DETOUR WITH ARROW	BLACK ON ORANGE (RETROREFLECTIVE)
	1	W20-3	900 X 900	89 X 89	1					ROAD CLOSED AHEAD	BLACK ON ORANGE (RETROREFLECTIVE)
	2	R11-2	1200 X 750					2		ROAD CLOSED	
	1	R11-4	1500 X 750	89 X 89	1					ROAD CLOSED TO THRU TRAFFIC	
	1	R3-5R	750 X 900	89 X 89	1					MANDATORY MOVEMENT LANE CONTROL	
	1	W20-5	900 X 900	89 X 89	1					RIGHT LANE CLOSED AHEAD	BLACK ON ORANGE (RETROREFLECTIVE)
SHEET TOTAL	33										

(N) - NOT A SEPARATE PAY ITEM, FOR INFORMATION ONLY.

(I) - FOR INFORMATION ONLY. QUANTITY HAS BEEN ACCOUNTED FOR IN STAGE CONSTRUCTION AND TRAFFIC HANDLING QUANTITIES PLANS.

1 REVISED PER ADDENDUM No. 1 DATED APRIL 21, 2011

STAGE CONSTRUCTION AND TRAFFIC HANDLING QUANTITIES
SCQ-20

REVISED BY | DATE REVISED
WILL CARPIO | NGIM NANCY PE
CALCULATED-DESIGNED BY | CHECKED BY
FUNCTIONAL SUPERVISOR
NGIM NANCY PE

STATE OF CALIFORNIA - DEPARTMENT OF TRANSPORTATION
Caltrans OFFICE OF DESIGN A

72159cmc020.add

LAST REVISION 00-00-00 | DATE PLOTTED => 20-APR-2011 | TIME PLOTTED => 13:19

Dist	COUNTY	ROUTE	KILOMETER POST TOTAL PROJECT	SHEET No.	TOTAL SHEETS
07	LA	5	2.9/4.9	552	1082

Ngim N. Pe 12-23-09
REGISTERED CIVIL ENGINEER DATE

6-21-10
PLANS APPROVAL DATE

REGISTERED PROFESSIONAL ENGINEER NGIM NANCY PE No. 58161 Exp. 6-30-10 CIVIL STATE OF CALIFORNIA

THE STATE OF CALIFORNIA OR ITS OFFICERS OR AGENTS SHALL NOT BE RESPONSIBLE FOR THE ACCURACY OR COMPLETENESS OF ELECTRONIC COPIES OF THIS PLAN SHEET.

Caltrans Metric

1

NOTE:

EXACT LOCATIONS AND POSITIONS OF ROADSIDE SIGNS WILL BE DETERMINED BY THE ENGINEER.

TRAFFIC HANDLING SIGNS

SHEET No.	No. OF SIGNS	SIGN CODE	PANEL SIZE (mm X mm)	POST SIZE (mm X mm)	ROADSIDE SIGN ONE POST EA	ROADSIDE SIGN TWO POST EA	BARRICADE (I) TYPE II EA	BARRICADE (I) TYPE III EA	STRAP & SADDLE BRACKET METHOD (N) EA	SIGN MESSAGE	REMARKS
SCD-8 (Cont'd)	3	R11-4	1500 X 750	89 X 89	1					ROAD CLOSED TO THRU TRAFFIC	
	3	M4-10L	900 X 300	89 X 89						DETOUR WITH ARROW	BLACK ON ORANGE (RETROREFLECTIVE)
	4	M4-10R	900 X 300	89 X 89	1					DETOUR WITH ARROW	BLACK ON ORANGE (RETROREFLECTIVE)
	2	SC3(CA)	900 X 300						1	DETOUR WITH ARROW	BLACK ON ORANGE (RETROREFLECTIVE)
	2	M4-10L	900 X 300	89 X 89	1					DETOUR WITH ARROW	BLACK ON ORANGE (RETROREFLECTIVE)
SCD-9	1	R9-9	750 X 450				1			SIDEWALK CLOSED	
	3	R61-19(CA)	750 X 600	89 X 89	1					INTERSECTION LANE CONTROL	
	2	W20-3	900 X 900	89 X 140	1					ROAD CLOSED AHEAD	
	2	M4-10L	900 X 300							DETOUR WITH ARROW	BLACK ON ORANGE (RETROREFLECTIVE)
	2	M4-9R(Mod)	750 X 600	89 X 89	1					FIRESTONE BL DETOUR	BLACK ON ORANGE (RETROREFLECTIVE)
	2	SC3(CA)	900 X 300	89 X 89	1					DETOUR WITH ARROW	BLACK ON ORANGE (RETROREFLECTIVE)
	1	M4-8a	750 X 900	89 X 89	1					END DETOUR	BLACK ON ORANGE (RETROREFLECTIVE)
	1	W73A(CA)	900 X 900	89 X 89	1					RIGHT LANE TURNS RIGHT AHEAD	BLACK ON ORANGE (RETROREFLECTIVE)
	1	W20-1	900 X 900	89 X 89	1					ROAD WORK AHEAD	BLACK ON ORANGE (RETROREFLECTIVE)
SCD-20	3	M4-9L(Mod)	750 X 600	89 X 89	1					CARMENITA Rd DETOUR	
	3	M4-9R(Mod)	750 X 600	89 X 89	1					CARMENITA Rd DETOUR	
	1	M4-8a	750 X 900	89 X 89	1					END DETOUR	
SHEET TOTAL	36										
GRAND TOTAL	495										

(N) - NOT A SEPARATE PAY ITEM, FOR INFORMATION ONLY.

(I) - FOR INFORMATION ONLY. QUANTITY HAS BEEN ACCOUNTED FOR IN STAGE CONSTRUCTION AND TRAFFIC HANDLING QUANTITIES PLANS.

1 REVISED PER ADDENDUM No. 1 DATED APRIL 21, 2011

STAGE CONSTRUCTION AND TRAFFIC HANDLING QUANTITIES

SCQ-23

REVISED BY: WILL CARPIO — DATE REVISED:
CALCULATED-DESIGNED BY: NGIM NANCY PE — CHECKED BY:
FUNCTIONAL SUPERVISOR: NGIM NANCY PE

STATE OF CALIFORNIA - DEPARTMENT OF TRANSPORTATION
Caltrans OFFICE OF DESIGN A

72159cmc023.add

LAST REVISION 00-00-00 | DATE PLOTTED => 20-APR-2011 | TIME PLOTTED => 13:19

Dist	COUNTY	ROUTE	KILOMETER POST TOTAL PROJECT	SHEET No.	TOTAL SHEETS
07	LA	5	2.9/4.9	566	1082

Caltrans Metric

1

REGISTERED CIVIL ENGINEER — DATE 12/23/09

6-21-10
PLANS APPROVAL DATE

REGISTERED PROFESSIONAL ENGINEER — VINCENT NGUYEN — No. 57797 — Exp. 3/31/10 — CIVIL — STATE OF CALIFORNIA

THE STATE OF CALIFORNIA OR ITS OFFICERS OR AGENTS SHALL NOT BE RESPONSIBLE FOR THE ACCURACY OR COMPLETENESS OF ELECTRONIC COPIES OF THIS PLAN SHEET.

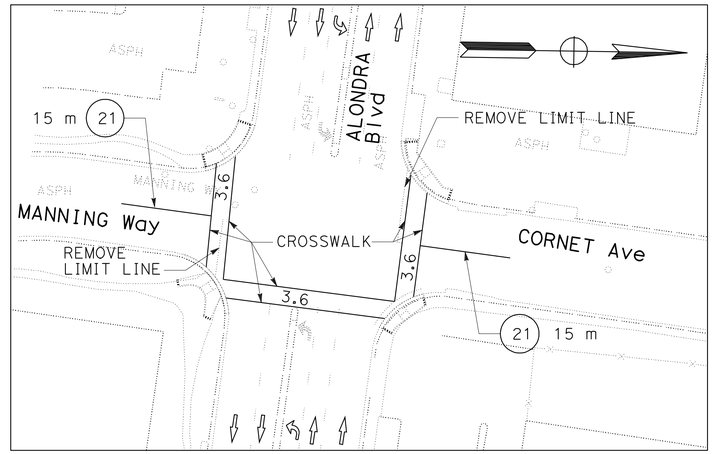

ALONDRA Blvd At CORNET Ave & MANNING Way

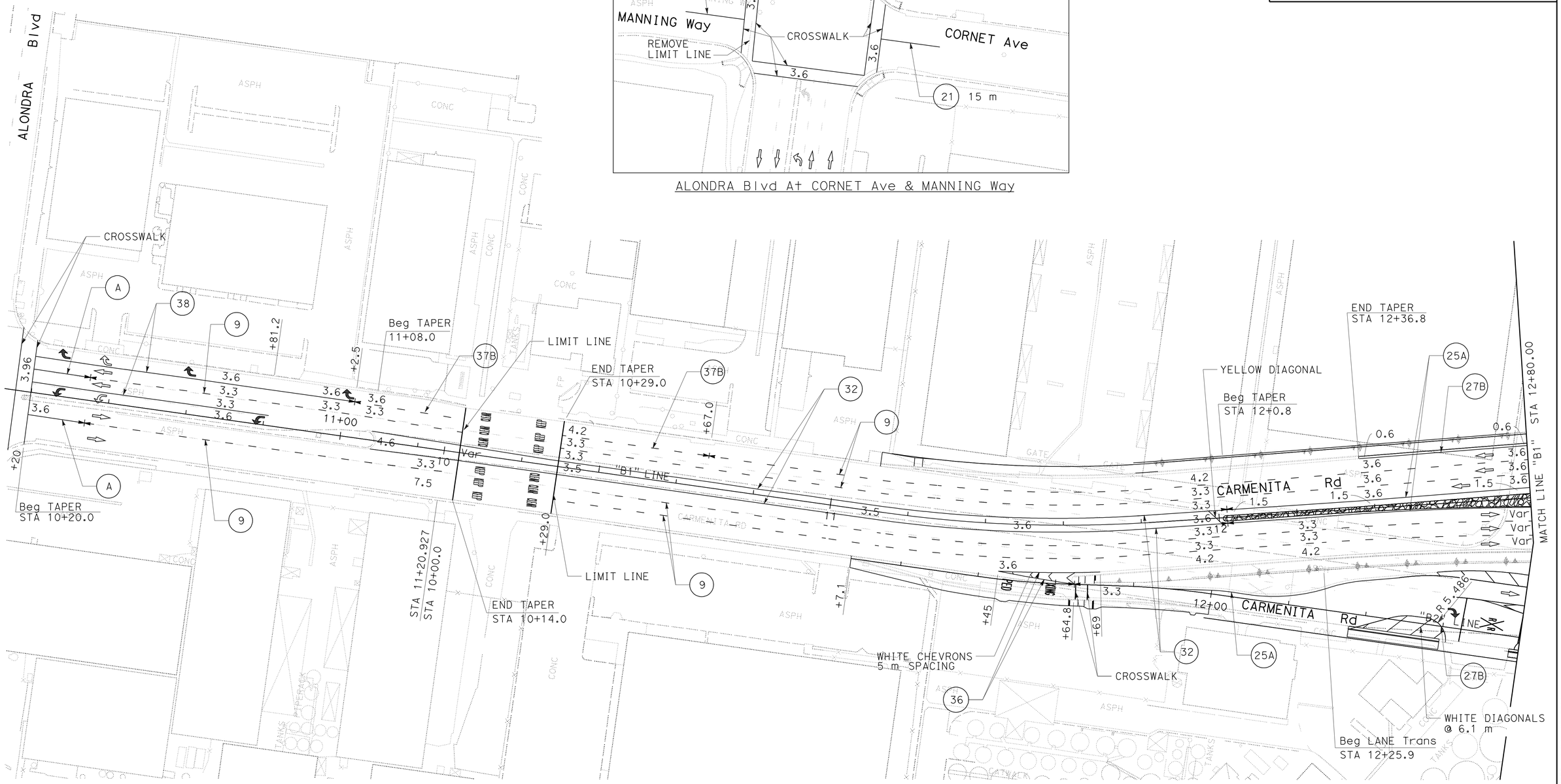

ALL DIMENSIONS ARE IN METERS UNLESS OTHERWISE SHOWN

PAVEMENT DELINEATION

SCALE 1:500

PD-8

1 **REVISED PER ADDENDUM No. 1 DATED APRIL 21, 2011**

THIS PLAN ACCURATE FOR PAVEMENT DELINEATION WORK ONLY

STATE OF CALIFORNIA - DEPARTMENT OF TRANSPORTATION
Caltrans **TRAFFIC DESIGN**

FUNCTIONAL SUPERVISOR: GRISH BIGLARIAN
CALCULATED-DESIGNED BY: EUGENE BRAVO
CHECKED BY: VINCENT NGUYEN
REVISED BY / DATE REVISED

LAST REVISION 00-00-00 | DATE PLOTTED => 20-APR-2011 | TIME PLOTTED => 13:19

Dist	COUNTY	ROUTE	KILOMETER POST TOTAL PROJECT	SHEET No.	TOTAL SHEETS
07	LA	5	2.9/4.9	602	1082

REGISTERED CIVIL ENGINEER 5/18/10 DATE

6-21-10
PLANS APPROVAL DATE

REGISTERED PROFESSIONAL ENGINEER VINCENT NGUYEN No. 57797 Exp. 3/31/12 CIVIL STATE OF CALIFORNIA

THE STATE OF CALIFORNIA OR ITS OFFICERS OR AGENTS SHALL NOT BE RESPONSIBLE FOR THE ACCURACY OR COMPLETENESS OF ELECTRONIC COPIES OF THIS PLAN SHEET.

To get to the Caltrans web site, go to: http://www.dot.ca.gov

Caltrans Metric

1

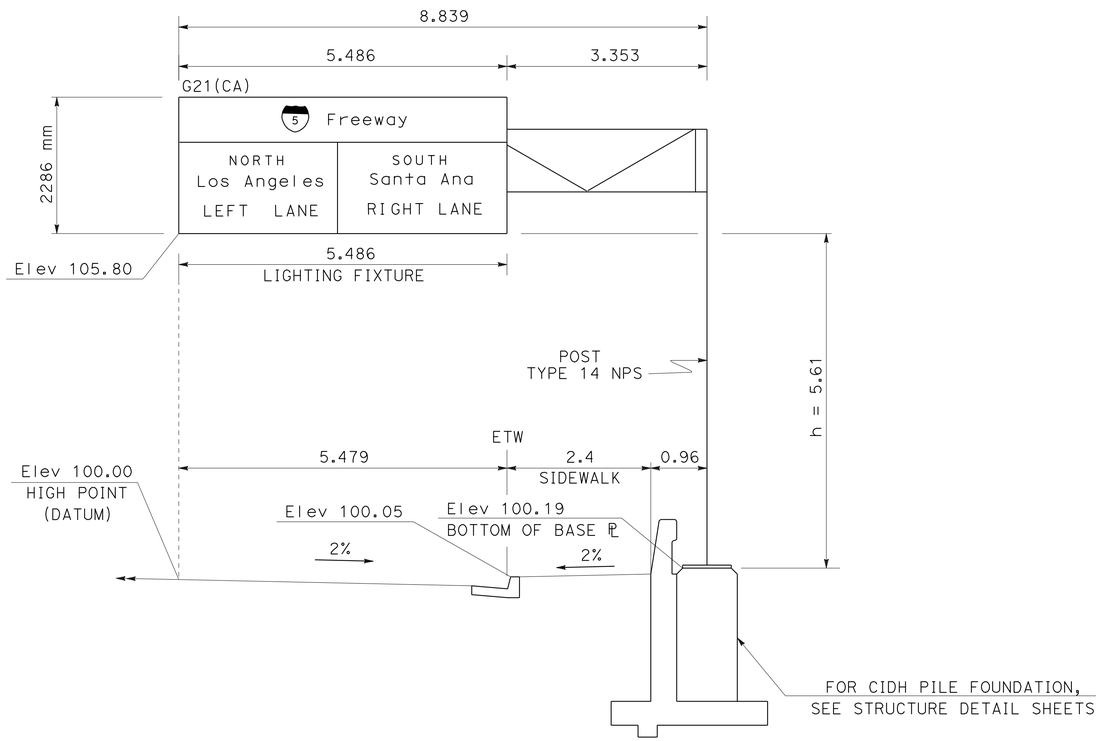

SIGN 8A

FNBT "B1" LINE STA 11+90.00
TYPE C-2 LIGHTWEIGHT SIGN - ILLUMINATED
TRUSSED ARM TS 203 mm X 152 mm X 9.5 mm
POST TYPE 14 NPS, t=15.88 mm

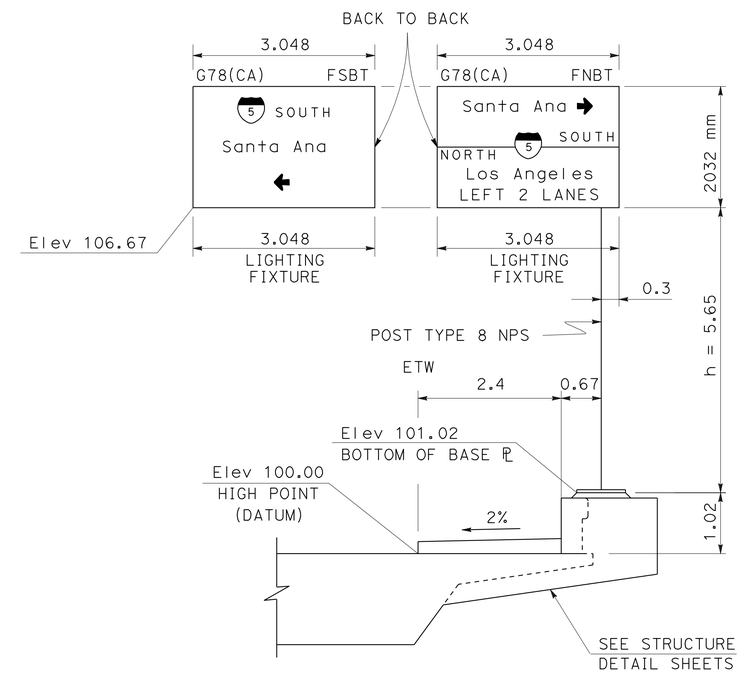

SIGN 9A

FNBT "B1" LINE STA 14+13.30
TYPE B-2 LIGHTWEIGHT SIGN - ILLUMINATED
DOUBLE ARM TS 102 mm X 102 mm X 6.4 mm
POST TYPE 8 NPS, t=12.7 mm

ALL DIMENSIONS ARE IN
METERS UNLESS OTHERWISE SHOWN

1 REVISED PER ADDENDUM No. 1 DATED APRIL 21, 2011

SIGN DETAILS

NO SCALE

SD-3

STATE OF CALIFORNIA - DEPARTMENT OF TRANSPORTATION
Caltrans **TRAFFIC DESIGN**

FUNCTIONAL SUPERVISOR: GRISH BIGLARIAN
CALCULATED-DESIGNED BY: EUGENE BRAVO
CHECKED BY: VINCENT NGUYEN
REVISED BY
DATE REVISED

LAST REVISION 00-00-00
DATE PLOTTED => 20-APR-2011
TIME PLOTTED => 10:53

Dist	COUNTY	ROUTE	KILOMETER POST TOTAL PROJECT	SHEET No.	TOTAL SHEETS
07	LA	5	2.9/4.9	603	1082

Vincent Nguyen 5/18/10
REGISTERED CIVIL ENGINEER DATE

6-21-10
PLANS APPROVAL DATE

REGISTERED PROFESSIONAL ENGINEER VINCENT NGUYEN No. 57797 Exp. 3/31/12 CIVIL STATE OF CALIFORNIA

THE STATE OF CALIFORNIA OR ITS OFFICERS OR AGENTS SHALL NOT BE RESPONSIBLE FOR THE ACCURACY OR COMPLETENESS OF ELECTRONIC COPIES OF THIS PLAN SHEET.

To get to the Caltrans web site, go to: http://www.dot.ca.gov

Caltrans Metric

1

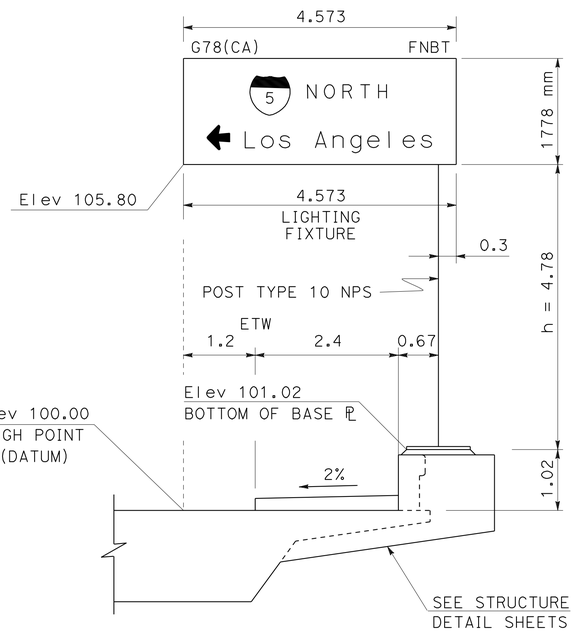

SIGN 9B
FNBT "B1" LINE STA 15+16.08
TYPE B-1 LIGHTWEIGHT SIGN - ILLUMINATED
SINGLE ARM TS 178 mm X 178 mm X 6.4 mm
POST TYPE 10 NPS, t=12.7 mm

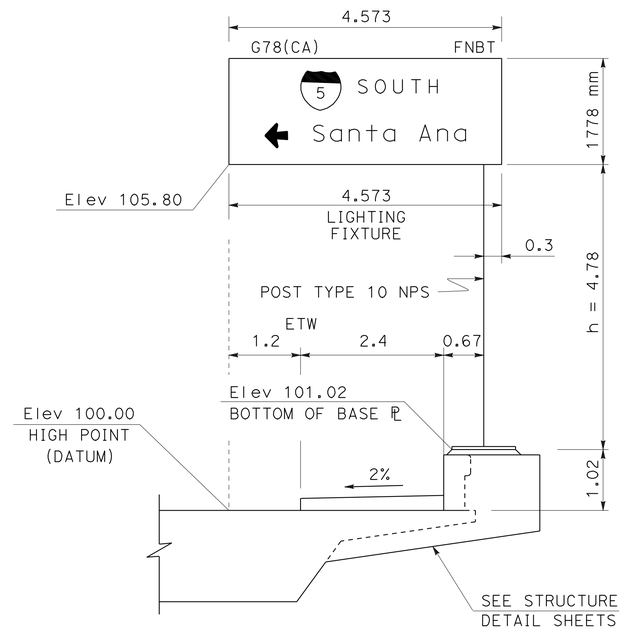

SIGN 9C
FSBT "B1" LINE STA 15+39.57
TYPE B-1 LIGHTWEIGHT SIGN - ILLUMINATED
SINGLE ARM TS 178 mm X 178 mm X 6.4 mm
POST TYPE 10 NPS, t=12.7 mm

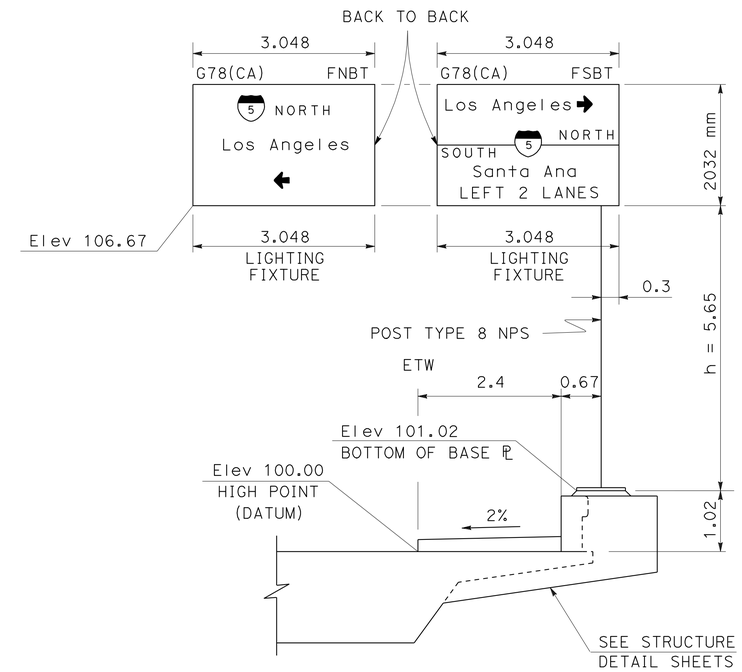

SIGN 10A
FSBT "B1" LINE STA 16+31.64
TYPE B-2 LIGHTWEIGHT SIGN - ILLUMINATED
DOUBLE ARM TS 102 mm X 102 mm X 6.4 mm
POST TYPE 8 NPS, t=12.7 mm

ALL DIMENSIONS ARE IN METERSUNLESS OTHERWISE SHOWN

SIGN DETAILS

NO SCALE

SD-4

1 **REVISED PER ADDENDUM No. 1 DATED APRIL 21, 2011**

STATE OF CALIFORNIA - DEPARTMENT OF TRANSPORTATION
Caltrans **TRAFFIC DESIGN**

FUNCTIONAL SUPERVISOR: GRISH BIGLARIAN
CALCULATED-DESIGNED BY: EUGENE BRAVO
CHECKED BY: VINCENT NGUYEN
REVISED BY
DATE REVISED

LAST REVISION 00-00-00
DATE PLOTTED => 20-APR-2011
TIME PLOTTED => 10:53

Dist	COUNTY	ROUTE	KILOMETER POST TOTAL PROJECT	SHEET No.	TOTAL SHEETS
07	LA	5	2.9/4.9	634	1082

Caltrans Metric

Ngim N. Pe 12-23-09
REGISTERED CIVIL ENGINEER DATE

6-21-10
PLANS APPROVAL DATE

REGISTERED PROFESSIONAL ENGINEER NGIM NANCY PE No. 58161 Exp. 6-30-10 CIVIL STATE OF CALIFORNIA

THE STATE OF CALIFORNIA OR ITS OFFICERS OR AGENTS SHALL NOT BE RESPONSIBLE FOR THE ACCURACY OR COMPLETENESS OF ELECTRONIC COPIES OF THIS PLAN SHEET.

1

ROADWAY REMOVAL QUANTITIES

SHEET No.	ALIGNMENT	LOCATION	REMOVE CONCRETE PAVEMENT	REMOVE CONCRETE SIDEWALK & DRIVEWAY	REMOVE CONCRETE (CURB & GUTTER) REMOVE CONCRETE (CURB & GUTTER)	REMOVE CONCRETE (CURB & GUTTER) REMOVE CONCRETE CURB	REMOVE CONCRETE (CURB & GUTTER) REMOVE Conc GUTTER	REMOVE AC DIKE	REMOVE CHAIN LINK FENCE	REMOVE RETAINING WALL	REMOVE SOUND WALL	REMOVE DOUBLE METAL BEAM BARRIER (DMBB)	REMOVE METAL BEAM GUARD RAILING	REMOVE AC SURFACE	REMOVE RETAINING CURB	REMOVE WROUGHT IRON FENCE
			m^2	m^2	m	m	m	m	m	m	m	m	m	m^2	m	
C-1	"A1"	Sta 27+71.898 TO 30+00.000			400				230			200				
	"D1"	Sta 11+20.000 TO 15+15.000	202	548	763				238.3					561		32.7
	"E1"	Sta 10+40.000 TO 12+06.262		122	232				72				17	277		
C-2	"A1"	Sta 30+00.000 TO 33+60.000	4859			720						360	23			
	"D1"	Sta 15+14.852 TO 18+75.000	154	41	617				383.9							190.1
	"E1"	Sta 12+05.000 TO 15+66.564		315	360				60							
C-3	"A1"	Sta 33+60.000 TO 37+20.000	5185		871			122				360				
	"C1"	Sta 36+08.000 TO 37+20.000														
	"C2"	Sta 36+67.000 TO 37+20.000														
	"D1"	Sta 18+75.000 TO 21+94.000		53	631				327					1220		116
	"E1"	Sta 15+64.040 TO 19+29.061		664	416				298							
C-4	"A1"	Sta 37+20.000 TO 41+00.000	4667		861		133		340			380	17			
	"B2"	Sta 13+40.000 TO 13+80.000		102	63									583		
	"C1"	Sta 37+21.000 TO 38+93.573						94								
	"C2"	Sta 37+20.000 TO 39+44.562		143	149								106			153.2
	"C3"	Sta 39+45.053 TO 44+69.031		454	615		163		251	101			40	1417		
	"C4"	Sta 38+90.651 TO 39+99.128		47	199											
	"E1"	Sta 19+25.000 TO 23+15.000		123	178				401							
C-5	"A1"	Sta 41+00.000 TO 44+60.000	4925		811	115	106		360		77	360	18			
	"C3"	Sta 44+69.031 TO "A1" 44+60.000		1153	352				398						250	
	"C4"	Sta 41+00.405 TO "E1" 26+45.263		47	238											
	"D3"	Sta 10+00.000 TO 10+05.000	51													
	"E1"	Sta 23+13.393 TO "E1" 26+45.263			1.2				4							
C-6	"A1"	Sta 44+60.000 TO 48+00.000	612		483				44		340	242	188			
	"D3"	Sta 10+05.000 TO 14+49.237	267	1083	578											
C-7	"A1"	Sta 44+60.000 TO 49+22.700									20		20			
	"D3"	Sta 14+49.237 TO 15+67.730	7	189	188				22							
SUB-TOTAL			20929	5084	9006	835	402	216	3429.2	101	437	1902	429	4058	250	492

SHEET No.	ALIGNMENT	LOCATION	REMOVE CONCRETE PAVEMENT	REMOVE CONCRETE SIDEWALK & DRIVEWAY	REMOVE CONCRETE (CURB & GUTTER) REMOVE CONCRETE (CURB & GUTTER)	REMOVE CONCRETE (CURB & GUTTER) REMOVE CONCRETE CURB	REMOVE CONCRETE (CURB & GUTTER) REMOVE CONCRETE GUTTER	REMOVE AC DIKE	REMOVE CHAIN LINK FENCE	REMOVE RETAINING WALL	REMOVE SOUND WALL	REMOVE DOUBLE METAL BEAM BARRIER (DMBB)	REMOVE METAL BEAM GUARD RAILING (MBGR)	REMOVE AC SURFACE	REMOVE RETAINING CURB	REMOVE WROUGHT IRON FENCE
			m^2	m^2	m	m	m	m	m	m	m	m	m	m^2		
C-8	"B1"	Sta 11+00.000 TO 12+80.000		458	321		20		27.3							35
	"B2"	Sta 11+70.000 TO 12+85.000														
C-9	"B1"	Sta 12+80.000 TO 16+00.000		62	29								50			
	"B2"	Sta 12+85.000 TO 13+80.000												1435		
	"E2"	Sta 0+00.000 TO 2+00.000		61	163									764		
	"E3"	Sta 0+00.000 TO 2+18.310		134	236	120								968		
C-10	"B1"	Sta 16+00.000 TO 19+45.000		1350	514				132				7			
	"D2"	Sta 16+00.000 TO "B1" 19+45.000		112										594		
C-11	"D1"	Sta 21+94.000 TO 24+26.854		125	73											
	"D2"	Sta 14+00.000 TO 16+00.000		205	132											
SUB-TOTAL				2507	1468	120	20		159.3				57	3761		35
TOTAL			20929	7591	11851			216	3588.5	101	437	1902	486	7819	250	527

SUMMARY OF QUANTITIES

1 REVISED PER ADDENDUM No. 1 DATED APRIL 21, 2011

Q-1

REVISED BY	DATE REVISED
3/07	7/07

KEVIN Q NGUYEN — CALCULATED-DESIGNED BY
NGIM NANCY PE — CHECKED BY
NGIM NANCY PE — FUNCTIONAL SUPERVISOR

STATE OF CALIFORNIA - DEPARTMENT OF TRANSPORTATION
Caltrans OFFICE OF DESIGN A

72159cpa001.add

LAST REVISION 00-00-00 DATE PLOTTED => 20-APR-2011 TIME PLOTTED => 10:53

Dist	COUNTY	ROUTE	KILOMETER POST TOTAL PROJECT	SHEET No.	TOTAL SHEETS
07	LA	5	2.9/4.9	635	1082

Caltrans Metric

1

Ngim N. Pe 12-23-09
REGISTERED CIVIL ENGINEER DATE

6-21-10
PLANS APPROVAL DATE

REGISTERED PROFESSIONAL ENGINEER NGIM NANCY PE No. 58161 Exp. 6-30-10 CIVIL STATE OF CALIFORNIA

THE STATE OF CALIFORNIA OR ITS OFFICERS OR AGENTS SHALL NOT BE RESPONSIBLE FOR THE ACCURACY OR COMPLETENESS OF ELECTRONIC COPIES OF THIS PLAN SHEET.

CONSTRUCTION DETAILS QUANTITIES

SHEET No.	ALIGNMENT	ROADWAY EXCAVATION	MINOR CONCRETE (SIDEWALK, CURB, GUTTER, DRIVEWAY, CURB RAMP, CROSS GUTTER)	CLASS 2 AGGREGATE BASE	CLASS 3 AGGREGATE BASE	CLASS 4 AGGREGATE SUBBASE	HOT MIX ASPHALT (TYPE B)	MINOR CONCRETE (TEXTURE PAVING)	COLD PLANE ASPHALT CONCRETE PAVEMENT	CL FENCE (TYPE CL-1.8)	FENCE (TYPE BW, 4-STRAND, METAL POST)	ROLLING CL GATE (W=9.1 m)	GUARD POST	REMOVE CURB & GUTTER	REMOVE Conc SIDEWALK	CL GATE (W=4.57 m)	CL GATE (W=7.3 m)	PARKING BUMPER	REMOVE PARKING BUMPER	REMOVE GUARD POST	ROCK BLANKET	RELOCATE SIGN	100 mm TRAFFIC STRIPE	PAVEMENT MARKING
		m^3	m^3	m^3	m^3	m^3	TONN	m^2	m^2	m	m	EA	EA	m	m2	EA	EA	EA	EA	EA	m^2	EA	m	m^2
C-12			18					344																
C-13			20					822																
C-14			11					56																
C-15			11					324																
C-16								36													9665			
C-24	"D2"	6	0.5				10		43	11	11						1							
C-25	"B1"		20.29		12		106		292				4					5	5	4		2	44	7.52
C-26												1	2					2	5					
C-29		115	4		51		168		195				3					14	30	3				
C-30			10											24	45									
C-31			10											22	40									
C-32	"B1"	33	2.14		58		146		47									10	10					
C-33	"B2"	10			10		25																	
C-36	"B2"		3		25		63		33					8										
C-39	"E3"			8	6	10	73		298															
C-40			4		58		173		120															
C-46																1								
C-55		206		84	103		450			2														
SUB-TOTAL		370	113.94	92	323	10	1214	1582	1028	13	11	1	9	54	85	1	1	31	50	7	9665	2	44	7.52

1 REVISED PER ADDENDUM No. 1 DATED APRIL 21, 2011

SUMMARY OF QUANTITIES
Q-2

STATE OF CALIFORNIA - DEPARTMENT OF TRANSPORTATION
Caltrans OFFICE OF DESIGN A

FUNCTIONAL SUPERVISOR: NGIM NANCY PE
CALCULATED-DESIGNED BY: KEVIN Q NGUYEN
CHECKED BY: NGIM NANCY PE
REVISED BY: 6/09
DATE REVISED: 5/09

72159cpa002.add

LAST REVISION 00-00-00
DATE PLOTTED => 20-APR-2011
TIME PLOTTED => 10:53

Dist	COUNTY	ROUTE	KILOMETER POST TOTAL PROJECT	SHEET No.	TOTAL SHEETS
07	LA	5	2.9/4.9	637	1082

REGISTERED CIVIL ENGINEER 12-23-09 DATE

6-21-10
PLANS APPROVAL DATE

REGISTERED PROFESSIONAL ENGINEER NGIM NANCY PE No. 58161 Exp. 6-30-10 CIVIL STATE OF CALIFORNIA

THE STATE OF CALIFORNIA OR ITS OFFICERS OR AGENTS SHALL NOT BE RESPONSIBLE FOR THE ACCURACY OR COMPLETENESS OF ELECTRONIC COPIES OF THIS PLAN SHEET.

Caltrans Metric

1

(N) NOT A SEPARATE PAY ITEM

ROADWAY QUANTITIES

SHEET No.	ALIGNMENT	LOCATION	WROUGHT IRON FENCE	ROADWAY EXCAVATION	EMBANKMENT (N)	PLACE HMA DIKE (TYPE E)	PLACE HMA DIKE (TYPE F)	IMPORT BORROW	CONTAMINATED SOIL DISPOSAL	ROADWAY EXCAVATION (CONTAMINATED SOIL)	ROADWAY EXCAVATION (TYPE Y-2) (AERIALLY DEPOSITED LEAD)	METAL BEAM GUARD RAILING	ALTERNATIVE FLARES TERMINAL SYSTEM	ALTERNATIVE IN-LINE TERMINAL SYSTEM	CONCRETE BARRIER (TYPE 60G)	CONCRETE BARRIER (TYPE 60GE)	CONCRETE BARRIER (TYPE 736B Mod)	CONCRETE BARRIER (TYPE K)	PORTABLE CONCRETE BARRIER (TYPE 60K)	MINOR CONCRETE (SIDEWALK, CURB, GUTTER, DRIVEWAY, CURB RAMP, CROSS GUTTER)	3.7 m CHAIN LINK GATE (TYPE CL-1.8)	CHAIN LINK RAILING (TYPE 6 Mod)	CHAIN LINK FENCE (TYPE CL-1.8)	CLASS 2 AGGREGATE BASE	CLASS 3 AGGREGATE BASE	CLASS 4 AGGREGATE SUBBASE	MINOR CONCRETE (RAPID STRENGTH CONCRETE)	CONCRETE PAVEMENT	ROCK BLANKET	LEAN CONCRETE BASE	COLD PLANE ASPHALT CONCRETE PAVEMENT	HOT MIX ASPHALT (TYPE B)	PLACE HOT MIX ASPHALT (MISC AREA)	SEAL PAVEMENT JOINT	CRASH CUSHION (ADIEM)	CRASH CUSHION MODULE, SAND FILLED	END ANCHOR ASSEMBLY (TYPE SFT)	END CAP (TYPE B)	END CAP (TYPE TA)	TRANSITION RAILING (TYPE WB)	CABLE RAILING
			m	m^3	m^3	m	m	m^3	m^3	m^3	m^3	m	EA	EA	m	m	m	m	m	m^3	EA	m	m	m^3	m^3	m^3	m^3	m^3	m^2	m^3	m^2	TONN	m^2	m	EA	EA	EA	EA	EA	EA	m
C-73	"B1"	Sta 11+00.000 TO 12+80.000	35	1485	7959															100				1166	102	1378	9				957	2352			1						
L-8	"B2"	Sta 11+00.000 TO 12+85.000		1136	88															20				41	25	49	3				1060	186									
C-74	"B1"	Sta 12+80.000 TO 16+00.000		11167	3786															10				100	14							142									
	"B2"	Sta 12+85.000 TO 13+80.000		511	11															100				436	68	524	4				270	661									
	"E1"	Sta 19+40 TO 21+80																		98				659	72	791						950									
L-9	"E2"	Sta 0+00.000 TO 2+00.000		1681	5															65				483	61	580						697									
	"E3"	Sta 0+00.000 TO 2+18.310		1913	12					422										50				764	33	917	9					1102									
C-75	"B1"	Sta 16+00.000 TO 19+45.000		4076	13793			3832	237											90				1820	156	2151	24				1920	3980									
L-10	"D2"	Sta 16+00.000 TO 19+45.000		135	1680															33				396	52	475	5					570									
C-76	"D1"	Sta 21+94.000 TO 24+26.854		1249	33				103	2466										99				822	157	987	13					1377									
L-11	"D2"	Sta 14+00.000 TO 16+00.000		414																4				127	6	153					2380	470									
	"R1"																			42				410	31	492	5					591									
DP-17	"D1"	Sta 12+15.00 TO Sta 12+34.90																																							19.9
		SUB-TOTAL	35	23767	27367			3832	340	2888										711				7224	777	8497	72				6587	13078									19.9
		TOTAL	35	87462	50098	482	21	9792	1308	8694	9092	96	4	2	725	93	1889	846	1109	2060	8	1771	959	14455	28681	17068	179	34311	11483	16937	14997	38973	2608	37467	1	39	3	3	3	4	19.9

AUSTIN VAULT SAND FILTER QUANTITIES

TYPE	STRUCTURAL CONCRETE	STRUCTURE EXCAVATION	STRUCTURE BACKFILL	BAR REINFORCE-MENT STEEL	150 mm PERFORATED PLASTIC PIPE UNDERDRAIN	150 mm NON-PERFORATED PLASTIC PIPE UNDERDRAIN	PERMEABLE MATERIAL	SAND BEDDING	GABION	FILTER FABRIC	MISCELLANEOUS METAL AND STEEL	CABLE RAILING
	m^3	m^3	m^3	Kg	m	m	m^3	m^3	m^3	m^2	Kg	m
S-99-1.37	91.7	259.8	74.3	12,484	37.8	8.7	26.8	33.6	8.4	91.1	52.2	43.6

1 REVISED PER ADDENDUM No. 1 DATED APRIL 21, 2011

SUMMARY OF QUANTITIES

Q-4

KEVIN Q NGUYEN — CALCULATED-DESIGNED BY
NGIM NANCY PE — CHECKED BY
REVISED BY 6/09
DATE REVISED 5/09
FUNCTIONAL SUPERVISOR NGIM NANCY PE

STATE OF CALIFORNIA - DEPARTMENT OF TRANSPORTATION
Caltrans OFFICE OF DESIGN A

72159cpa004.add

LAST REVISION 00-00-00 | DATE PLOTTED => 21-APR-2011 | TIME PLOTTED => 10:23

Dist	COUNTY	ROUTE	KILOMETER POST TOTAL PROJECT	SHEET No.	TOTAL SHEETS
07	LA	5	2.9/4.9	638	1082

REGISTERED CIVIL ENGINEER 12-23-09 DATE

6-21-10
PLANS APPROVAL DATE

REGISTERED PROFESSIONAL ENGINEER NGIM NANCY PE No. 58161 Exp. 6-30-10 CIVIL STATE OF CALIFORNIA

THE STATE OF CALIFORNIA OR ITS OFFICERS OR AGENTS SHALL NOT BE RESPONSIBLE FOR THE ACCURACY OR COMPLETENESS OF ELECTRONIC COPIES OF THIS PLAN SHEET.

Caltrans Metric

1

LEGEND:

- Indicates Vertical Piles
- Indicates Battered 1:3 Piles

NOTES:

Piles are Class 400, Alternative "V" closed-end with 60° conical tip (B2-5)

Pile Tip shall be 14.0 m below bottom of wall footing

See Retaining Wall Type 1 for wall stem design; see '400 KN Pile Footing Section' on "TYPICAL SECTION" sheet for footing Reinf details (B3-1)

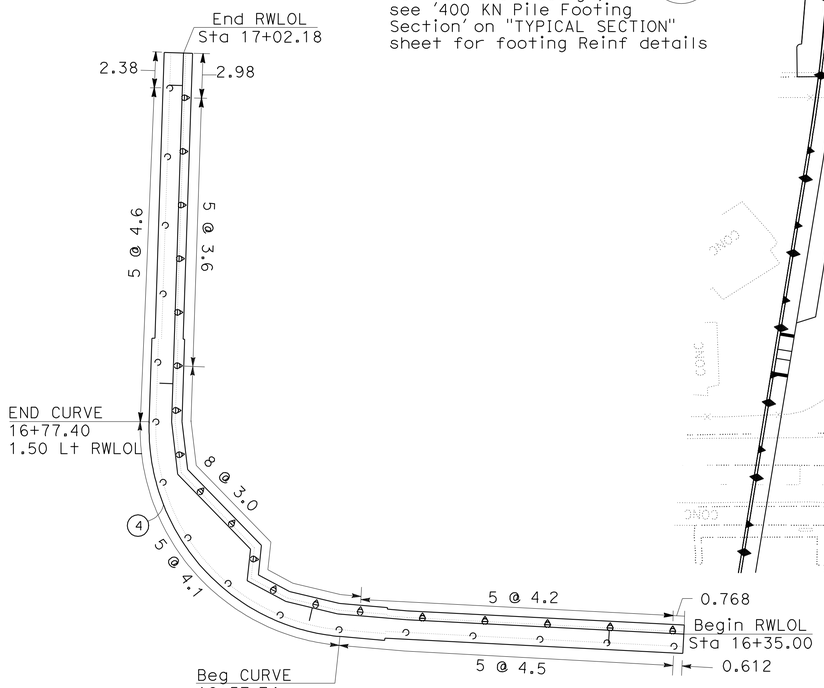

PLAN (B2-5)

SCALE: 1:200

CURVE DATA

No.	R	Δ	T	L
1	340.858	3°51'56"	11.502	22.996
2	12.600	29°42'24"	3.342	6.533
3	12.308	16°50'41"	1.822	3.618

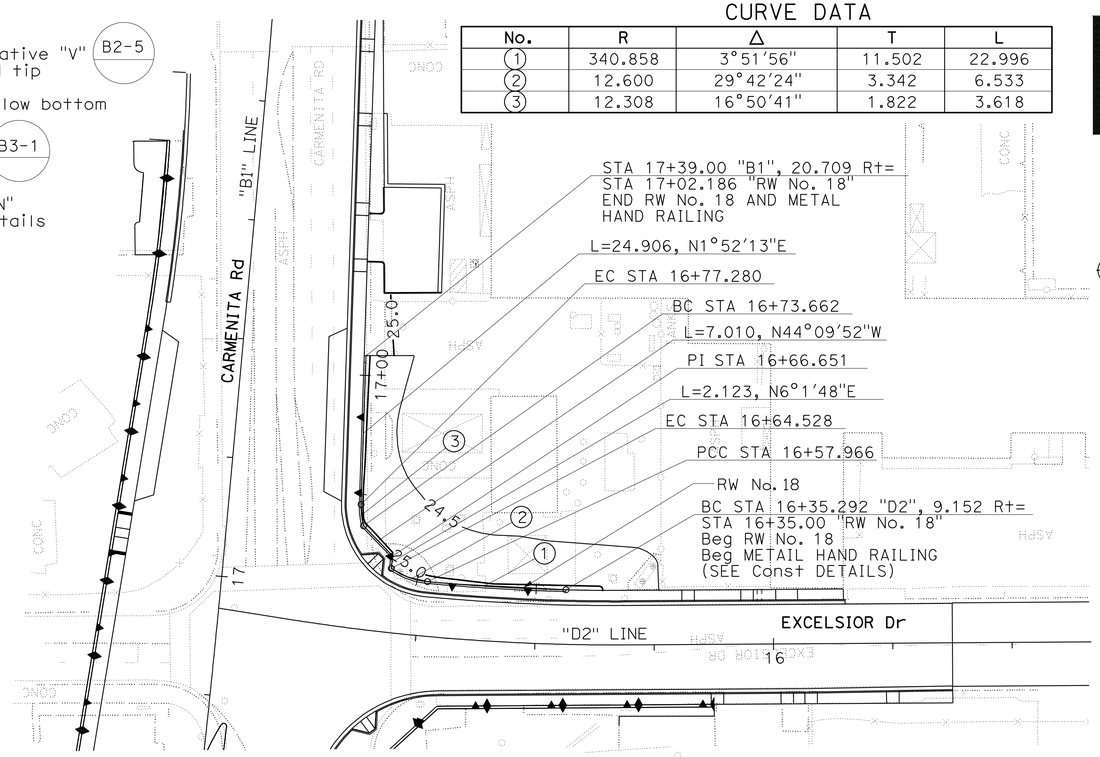

SCALE: HORIZ 1:500

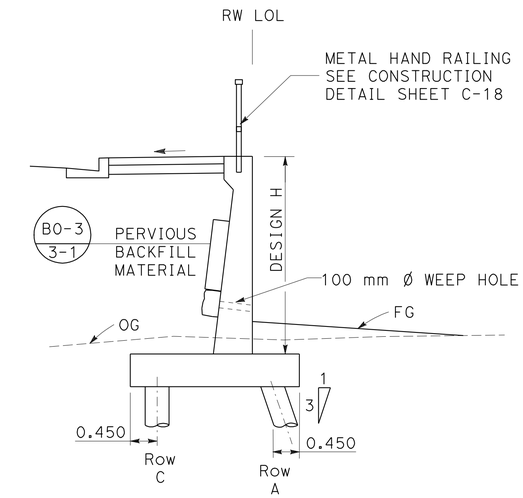

TYPICAL SECTION
NO SCALE

CURVE DATA

No.	R	Δ	T	L
4	35.00'	86°57'27"	33.19'	53.12'

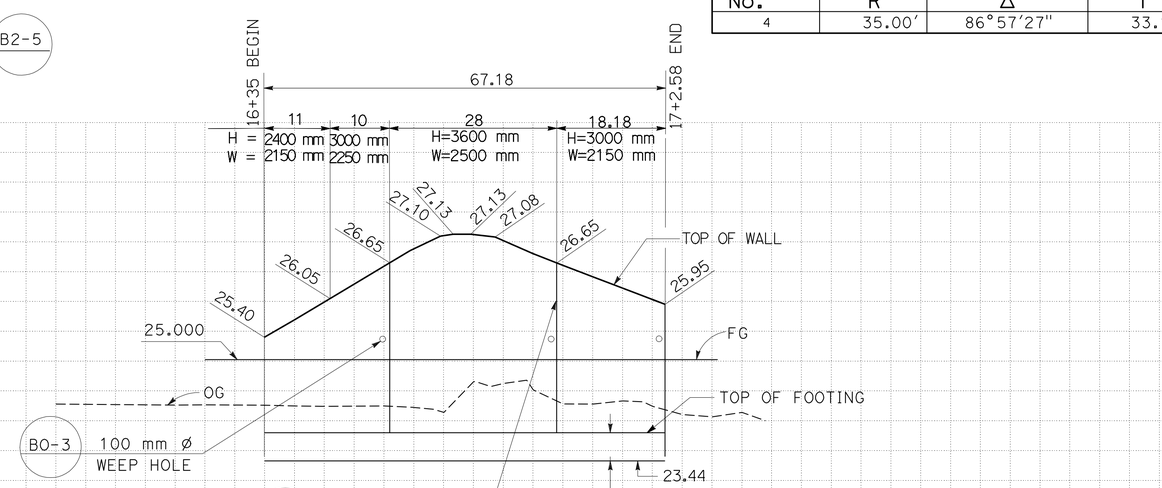

SCALE: HORIZ 1:500
VERT 1:50

THIS PLAN ACCURATE FOR RETAINING WALL WORK ONLY

RETAINING WALL QUANTITIES

STRUCTURE EXCAVATION (RETAINING WALL)	STRUCTURE BACKFILL (RETAINING WALL)	STRUCTURAL CONCRETE, RETAINING WALL	PERVIOUS BACKFILL MATERIAL (RETAINING WALL)	BAR REINFORCING STEEL (RETAINING WALL)	METAL HAND RAILING	PILING (CLASS 400) (ALTERNATIVE V)	DRIVE PILE (CLASS 400) (ALTERNATIVE V)
m^3	m^3	m^3	m^3	kg	m	m	EA
200	160	137	10	5645	65	521	37

ALL DIMENSIONS ARE IN MTERS
UNLESS OTHERWISE SHOWN

RETAINING WALL PLAN

1 REVISED PER ADDENDUM No. 1 DATED APRIL 21, 2011

R-1

Station	
m^3 Exc	
m^3 Emb	

REVISED BY | DATE REVISED

KEVIN Q. NGUYEN | NGIM NANCY PE

CALCULATED-DESIGNED BY | CHECKED BY

FUNCTIONAL SUPERVISOR | NGIM NANCY PE

STATE OF CALIFORNIA - DEPARTMENT OF TRANSPORTATION
Caltrans OFFICE OF DESIGN A

LAST REVISION 00-00-00 | DATE PLOTTED => 20-APR-2011 | TIME PLOTTED => 10:54

DIST	COUNTY	ROUTE	KILOMETER POST TOTAL PROJECT	SHEET No	TOTAL SHEETS
07	LA	5	2.9/4.9	642	1082

Daryoush Tavatli 03-15-11
REGISTERED CIVIL ENGINEER DATE

6-21-10
PLANS APPROVAL DATE

REGISTERED PROFESSIONAL ENGINEER Daryoush Tavatli No. 56183 Exp. 12-31-12 CIVIL STATE OF CALIFORNIA

The State of California or its officers or agents shall not be responsible for the accuracy or completeness of electronic copies of this plan sheet.

Caltrans Metric

1

To get to the Caltrans web site, go to: http://www.dot.ca.gov

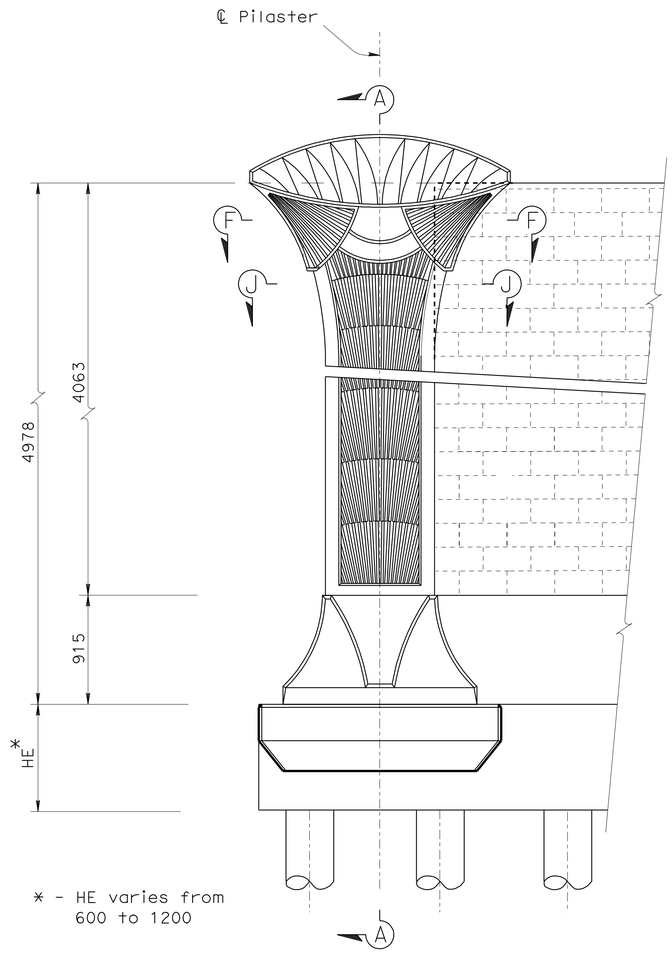

* - HE varies from 600 to 1200

END PILASTER ELEVATION

1:25

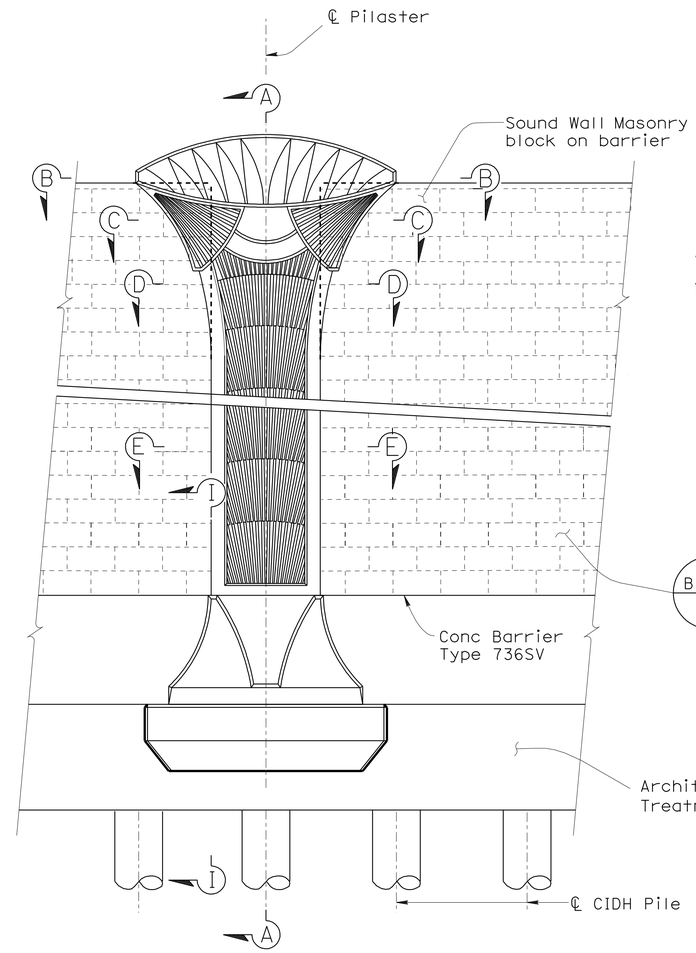

PILASTER ELEVATION

1:25

Notes:

1) For Section B-B, C-C, D-D, E-E, F-F & J-J, see "SOUNDWALL PILASTER DETAILS NO. 2" sheet
2) For Section A-A, G-G & H-H see "Pilaster Details No. 3" sheet
3) For Section I-I, see "SOUNDWALL PILASTER DETAILS NO.4" sheet
4) For pilaster dimensions, radius, texture & details, see ARCHITECTURAL PLANS

** - For Architectural treatment see ARCHITECTURAL PLANS

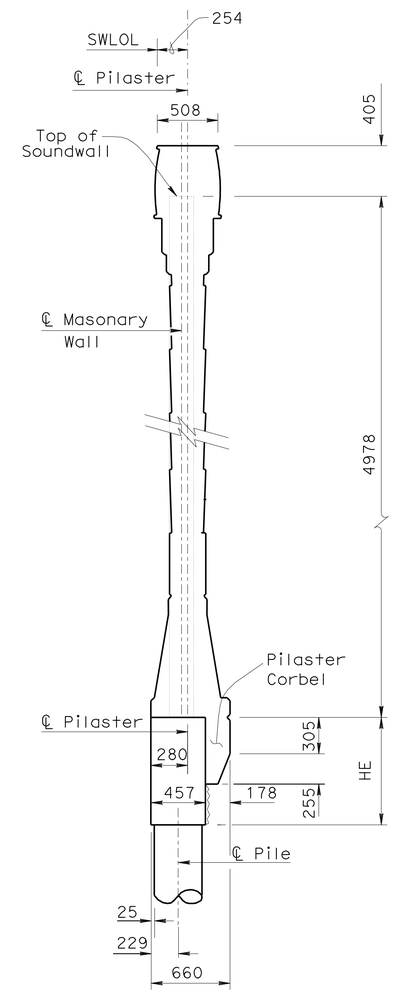

TYPICAL SECTION

1:25

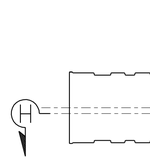

Note:
For details not shown, see 'Pilaster Plan'

END PILASTER PLAN

1:25

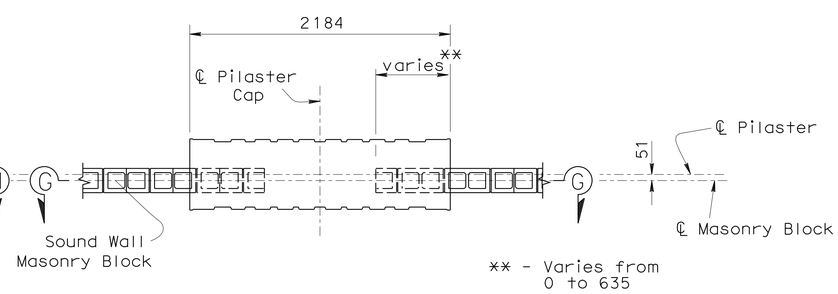

** - Varies from 0 to 635

PILASTER PLAN

1:25

1 REVISED PER ADDENDUM No. 1 DATED APRIL 21, 2011

SOUNDWALL PILASTER
PILASTER DETAIL NO. 1
SW-4

STATE OF CALIFORNIA - DEPARTMENT OF TRANSPORTATION
Caltrans OFFICE OF DESIGN A

FUNCTIONAL SUPERVISOR: NGIM NANCY PE
CALCULATED-DESIGNED BY: DARYOUSH TAVATLI
CHECKED BY: DARYOUSH TAVATLI
REVISED BY
DATE REVISED

LAST REVISION 00-00-00
DATE PLOTTED => 20-APR-2011
TIME PLOTTED => 13:33

DIST	COUNTY	ROUTE	KILOMETER POST TOTAL PROJECT	SHEET No	TOTAL SHEETS
07	LA	5	2.9/4.9	643	1082

Daryoush Tavatli 03-15-11
REGISTERED CIVIL ENGINEER DATE

6-21-10
PLANS APPROVAL DATE

REGISTERED PROFESSIONAL ENGINEER Daryoush Tavatli No. 56183 Exp. 12-31-12 CIVIL STATE OF CALIFORNIA

The State of California or its officers or agents shall not be responsible for the accuracy or completeness of electronic copies of this plan sheet.

To get to the Caltrans web site, go to: http://www.dot.ca.gov

Caltrans Metric

1

* - Cell with vertical reinf and bond beams to be filled with grouts, typ

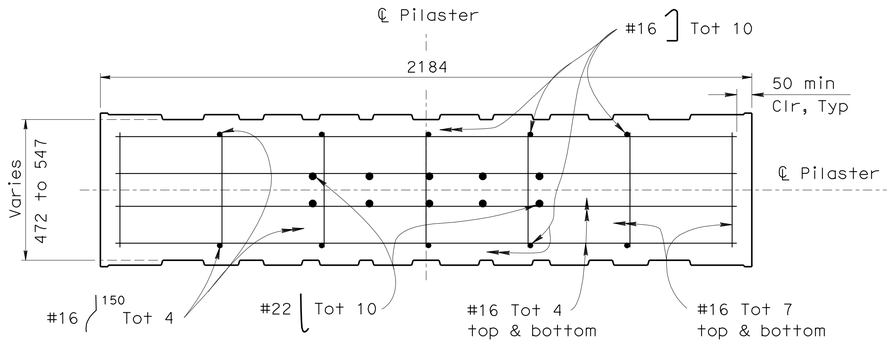

SECTION B-B

1:10

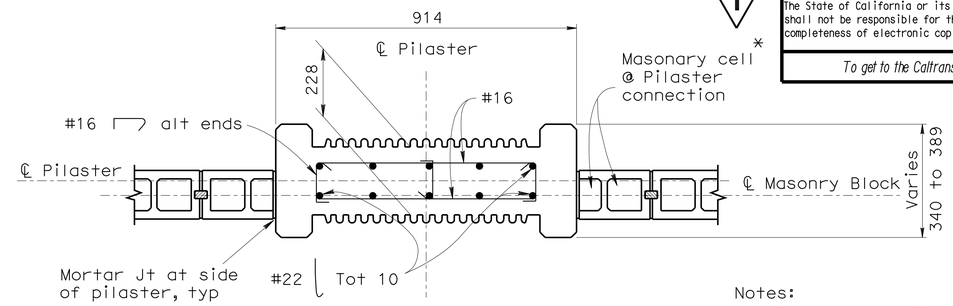

SECTION E-E

1:10

Notes:
Pilaster elevation section E-E shown, End Pilaster elevation similar

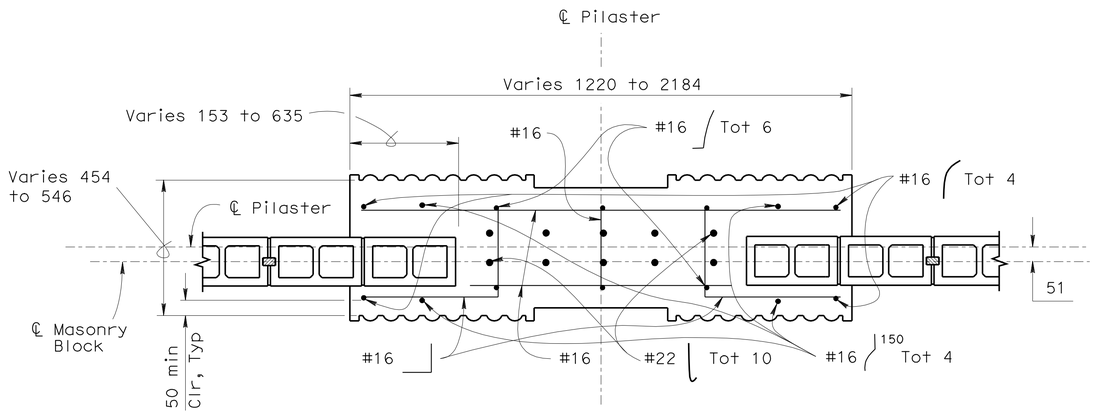

SECTION C-C

1:10

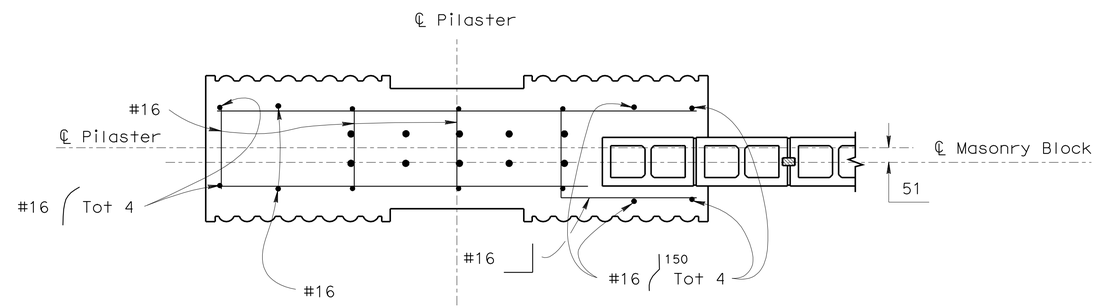

SECTION F-F

1:10

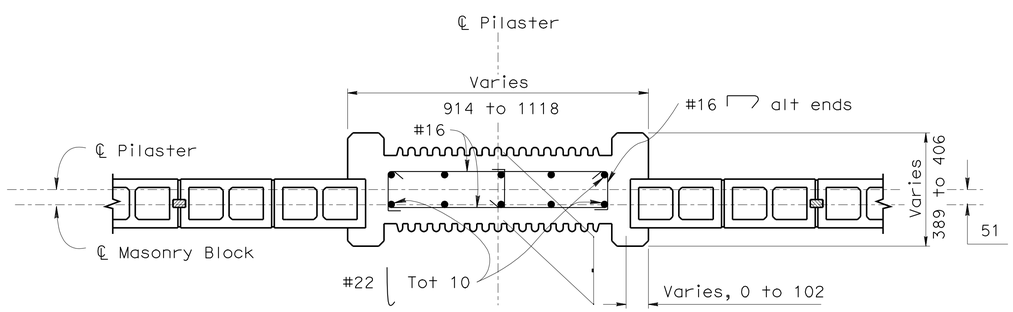

SECTION D-D

1:10

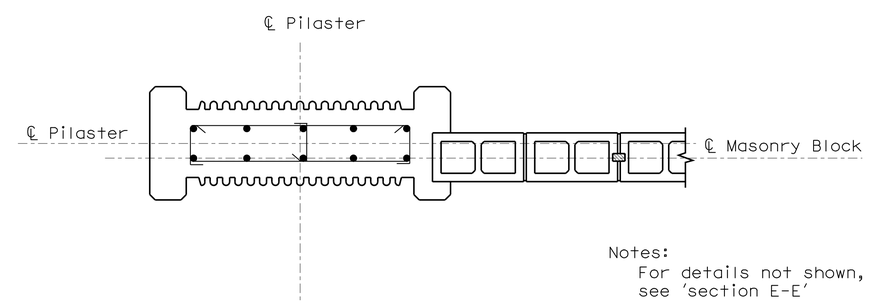

Notes:
For details not shown, see 'section E-E'

SECTION J-J

1:10

1 REVISED PER ADDENDUM No. 1 DATED APRIL 21, 2011

SOUNDWALL PILASTER
PILASTER DETAIL NO. 2
SW-5

STATE OF CALIFORNIA - DEPARTMENT OF TRANSPORTATION
Caltrans OFFICE OF DESIGN A

FUNCTIONAL SUPERVISOR: NGIM NANCY PE
CALCULATED-DESIGNED BY: DARYOUSH TAVATLI
CHECKED BY: DARYOUSH TAVATLI
REVISED BY
DATE REVISED

LAST REVISION 00-00-00
DATE PLOTTED => 20-APR-2011
TIME PLOTTED => 13:33

DIST	COUNTY	ROUTE	KILOMETER POST TOTAL PROJECT	SHEET No	TOTAL SHEETS
07	LA	5	2.9/4.9	644	1082

Caltrans Metric

1

Daryoush Tavatli 03-15-11
REGISTERED CIVIL ENGINEER DATE

6-21-10
PLANS APPROVAL DATE

REGISTERED PROFESSIONAL ENGINEER
Daryoush Tavatli
No. 56183
Exp. 12-31-12
CIVIL
STATE OF CALIFORNIA

The State of California or its officers or agents shall not be responsible for the accuracy or completeness of electronic copies of this plan sheet.

To get to the Caltrans web site, go to: http://www.dot.ca.gov

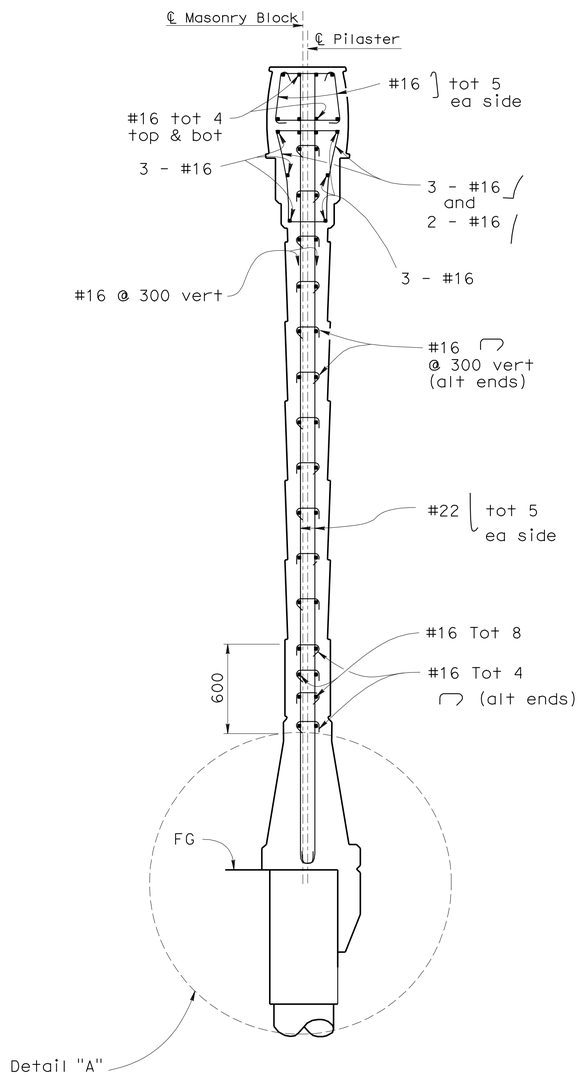

Note:
For Detail 'A', see "SOUNDWALL PILASTER DETAIL NO. 4" sheet

SECTION A-A

1:20

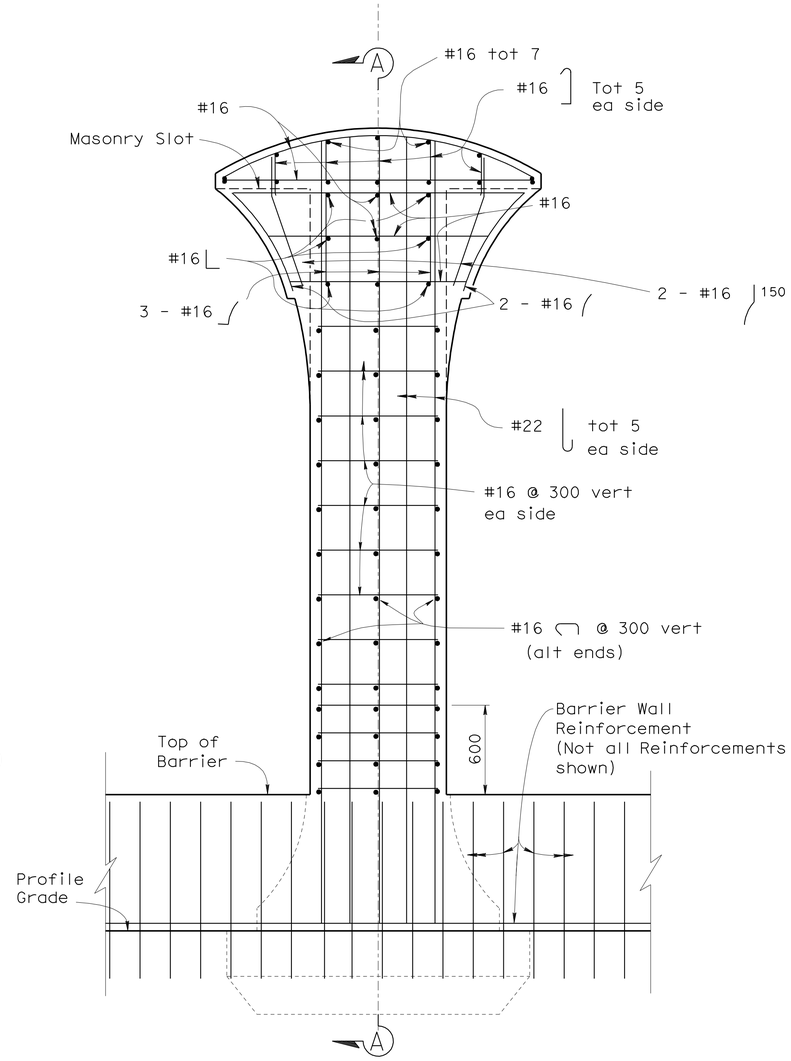

SECTION G-G

1:20

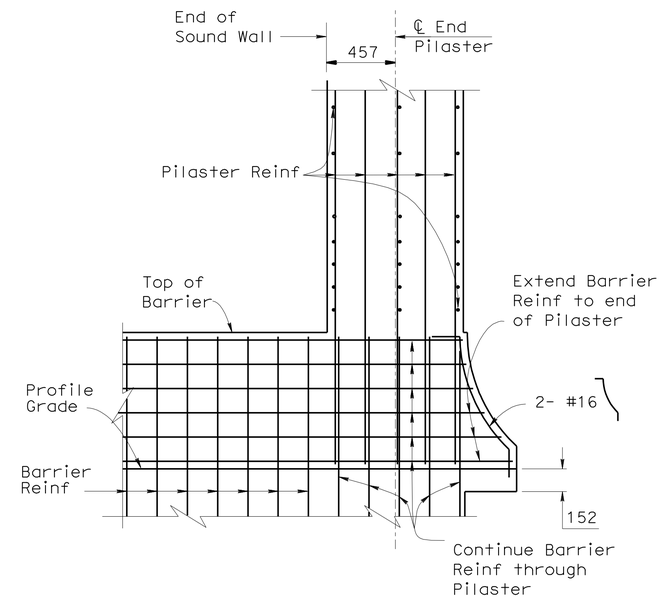

Note: For details not shown, see "SECTION G-G"

SECTION H-H

1:20

1 REVISED PER ADDENDUM No. 1 DATED APRIL 21, 2011

SOUNDWALL PILASTER
PILASTER DETAIL NO. 3
SW-6

STATE OF CALIFORNIA - DEPARTMENT OF TRANSPORTATION
Caltrans OFFICE OF DESIGN A

FUNCTIONAL SUPERVISOR: NGIM NANCY PE
CALCULATED-DESIGNED BY: DARYOUSH TAVATLI
CHECKED BY: DARYOUSH TAVATLI
REVISED BY
DATE REVISED

LAST REVISION 00-00-00
DATE PLOTTED => 20-APR-2011
TIME PLOTTED => 13:33

DIST	COUNTY	ROUTE	KILOMETER POST TOTAL PROJECT	SHEET No	TOTAL SHEETS
07	LA	5	2.9/4.9	645	1082

Caltrans Metric

1

REGISTERED CIVIL ENGINEER 03-15-11 DATE

6-21-10
PLANS APPROVAL DATE

REGISTERED PROFESSIONAL ENGINEER
Daryoush Tavatli
No. 56183
Exp. 12-31-12
CIVIL
STATE OF CALIFORNIA

The State of California or its officers or agents shall not be responsible for the accuracy or completeness of electronic copies of this plan sheet.

To get to the Caltrans web site, go to: http://www.dot.ca.gov

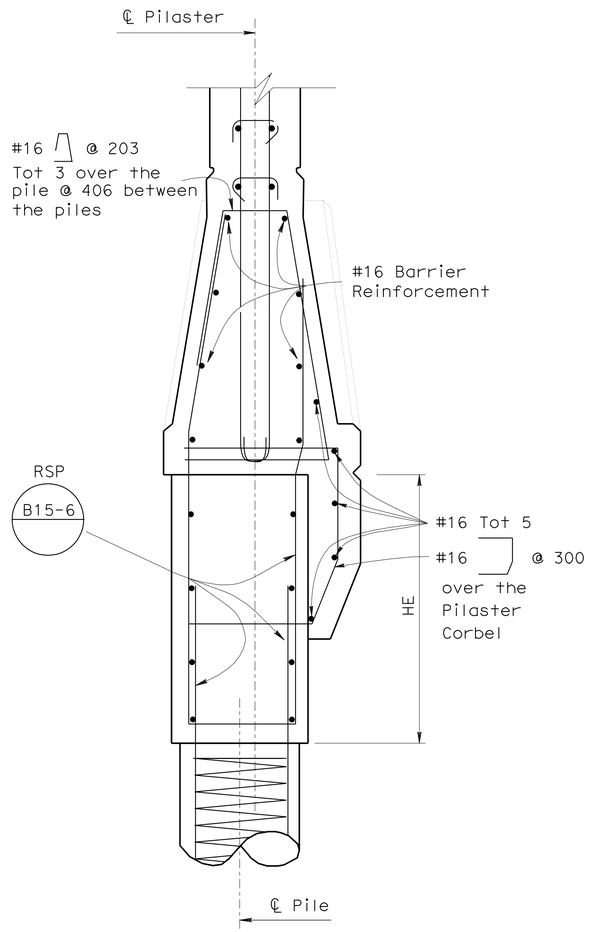

Note: For details not shown see 'Typical Section' on "PILASTER DETAILS NO. 1" sheet

DETAIL "A"
1:10

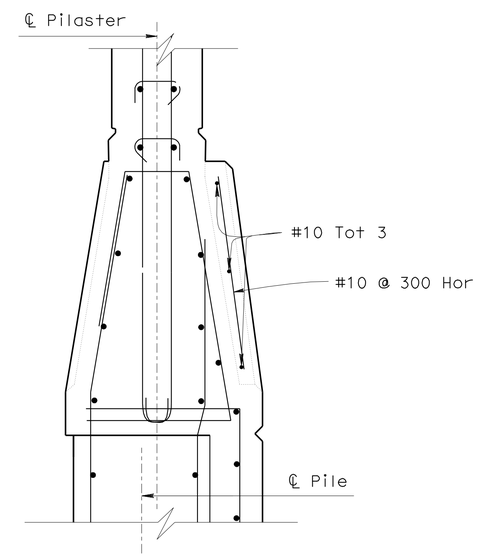

PART SECTION I-I
1:20

1 **REVISED PER ADDENDUM No. 1 DATED APRIL 21, 2011**

SOUNDWALL PILASTER
PILASTER DETAIL NO. 4
SW-7

STATE OF CALIFORNIA - DEPARTMENT OF TRANSPORTATION
Caltrans OFFICE OF DESIGN A

FUNCTIONAL SUPERVISOR: NGIM NANCY PE
CALCULATED-DESIGNED BY: DARYOUSH TAVATLI
CHECKED BY: DARYOUSH TAVATLI
REVISED BY
DATE REVISED

LAST REVISION 00-00-00
DATE PLOTTED => 20-APR-2011
TIME PLOTTED => 13:33

NOTES:
1. ALL NOTES AND DIMENSIONS SYMETRICAL ABOUT ℄ OF PILASTER
2. PILASTERS "A" AND B" OCCUR WHERE SHOWN ON ROADWAY PLAN SHEETS
3. BEVELED EDGES ARE 45° UNLESS OTHERWISE NOTED

1 REVISED PER ADDENDUM No. 1 DATED APRIL 21, 2011

DIST	COUNTY	ROUTE	KILOMETER POST TOTAL PROJECT	SHEET No	TOTAL SHEETS
07	LA	5	2.9/4.9	646	1082

LICENSED ARCHITECT — DATE 3/15/11

6-21-10
PLANS APPROVAL DATE

LICENSED ARCHITECT H. Javier Chavez 14073 03-31-11 Renewal Date STATE OF CALIFORNIA

The State of California or its officers or agents shall not be responsible for the accuracy or completeness of electronic copies of this plan sheet.

To get to the Caltrans web site, go to: http://www.dot.ca.gov

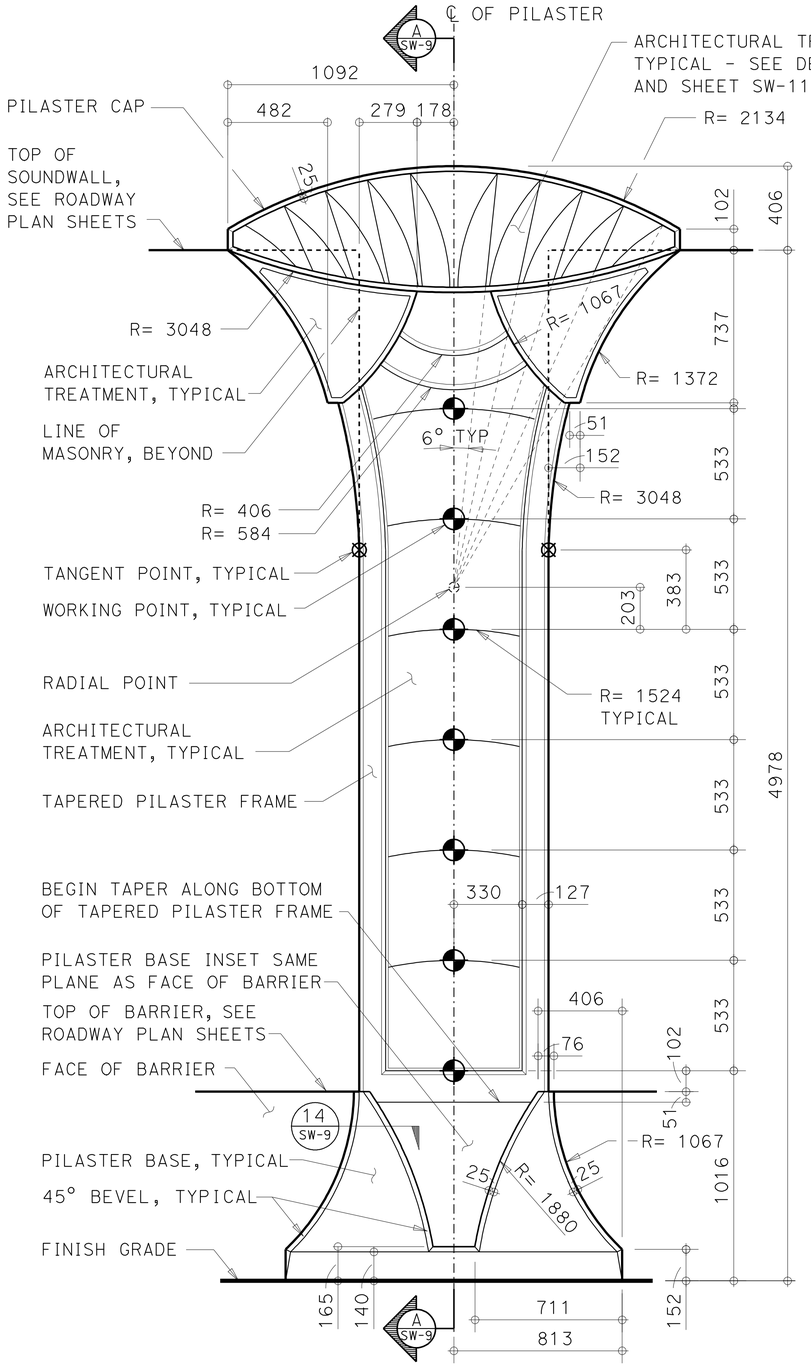

CONCRETE PILASTER "A" ELEVATION AT SOUNDWALL

NO SCALE (FREEWAY SIDE)

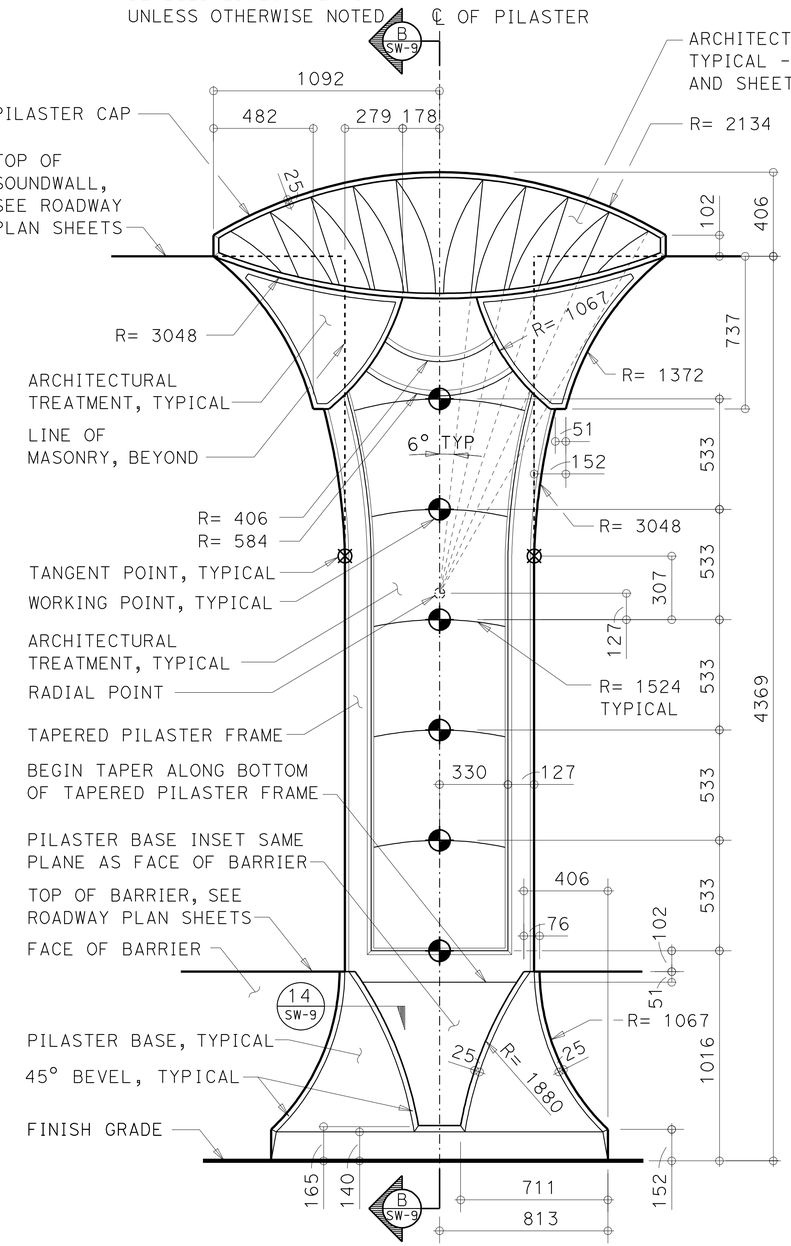

CONCRETE PILASTER "B" ELEVATION AT SOUNDWALL

NO SCALE (FREEWAY SIDE)

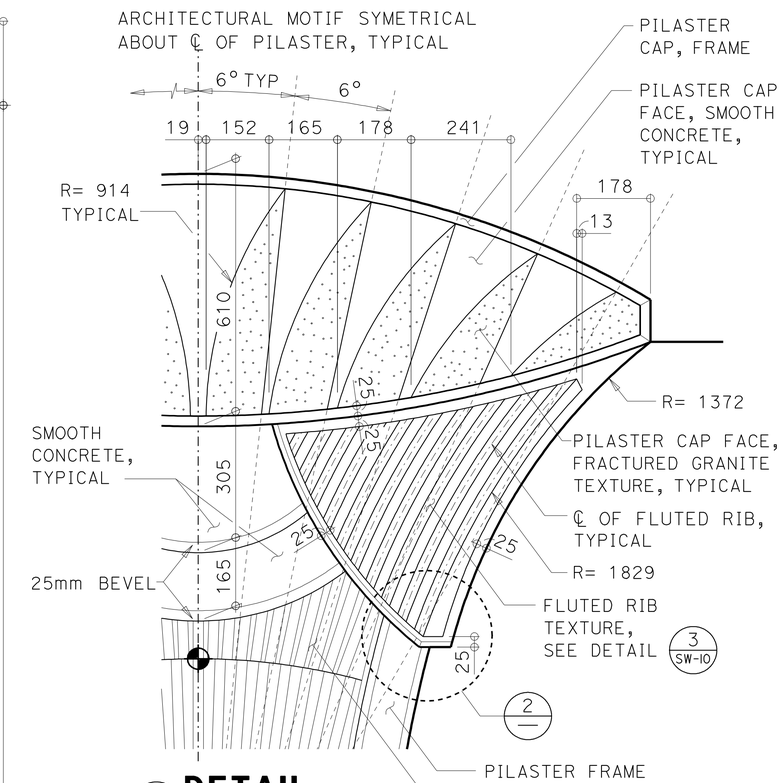

1 DETAIL
NO SCALE

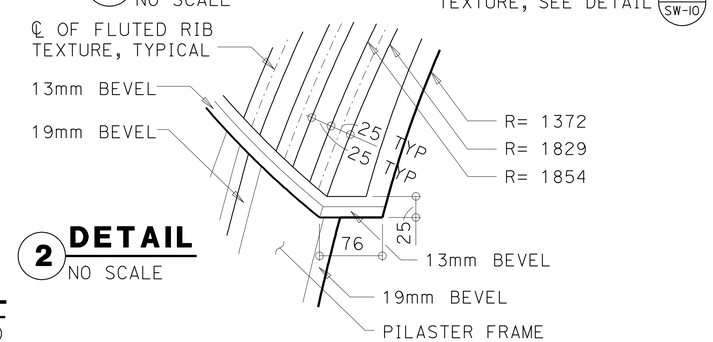

2 DETAIL
NO SCALE

DESIGN	BY H. Chavez	CHECKED I. Tasabia	
DETAILS	BY I. Tasabia	CHECKED H. Chavez	
QUANTITIES	BY	CHECKED	

STATE OF CALIFORNIA
DEPARTMENT OF TRANSPORTATION

DIVISION OF ENGINEERING SERVICES
BRIDGE ARCHITECTURE AND AESTHETICS

BRIDGE NO.
KILOMETER POST

TYPICAL SOUNDWALL PILASTERS
ELEVATIONS AND DETAILS

SHEET **SW-8**

Caltrans Metric

ALL DIMENSIONS ARE IN MILLIMETERS UNLESS OTHERWISE SHOWN

ORIGINAL SCALE IN MILLIMETERS FOR REDUCED PLANS 0 10 20 30 40 50 60 70 80 90 100

CU 07
EA 2159C1

DISREGARD PRINTS BEARING EARLIER REVISION DATES

REVISION DATES — SHEET — OF

FILE => 72159cra008.add

USERNAME => ttrienard DATE PLOTTED => 20-APR-2011 TIME PLOTTED => 12:47

DIST	COUNTY	ROUTE	KILOMETER POST TOTAL PROJECT	SHEET No	TOTAL SHEETS
07	LA	5	2.9/4.9	647	1082

LICENSED ARCHITECT — DATE 3/15/11

6-21-10
PLANS APPROVAL DATE

LICENSED ARCHITECT H. Javier Chavez 14073 03-31-11 Renewal Date STATE OF CALIFORNIA

The State of California or its officers or agents shall not be responsible for the accuracy or completeness of electronic copies of this plan sheet.

To get to the Caltrans web site, go to: http://www.dot.ca.gov

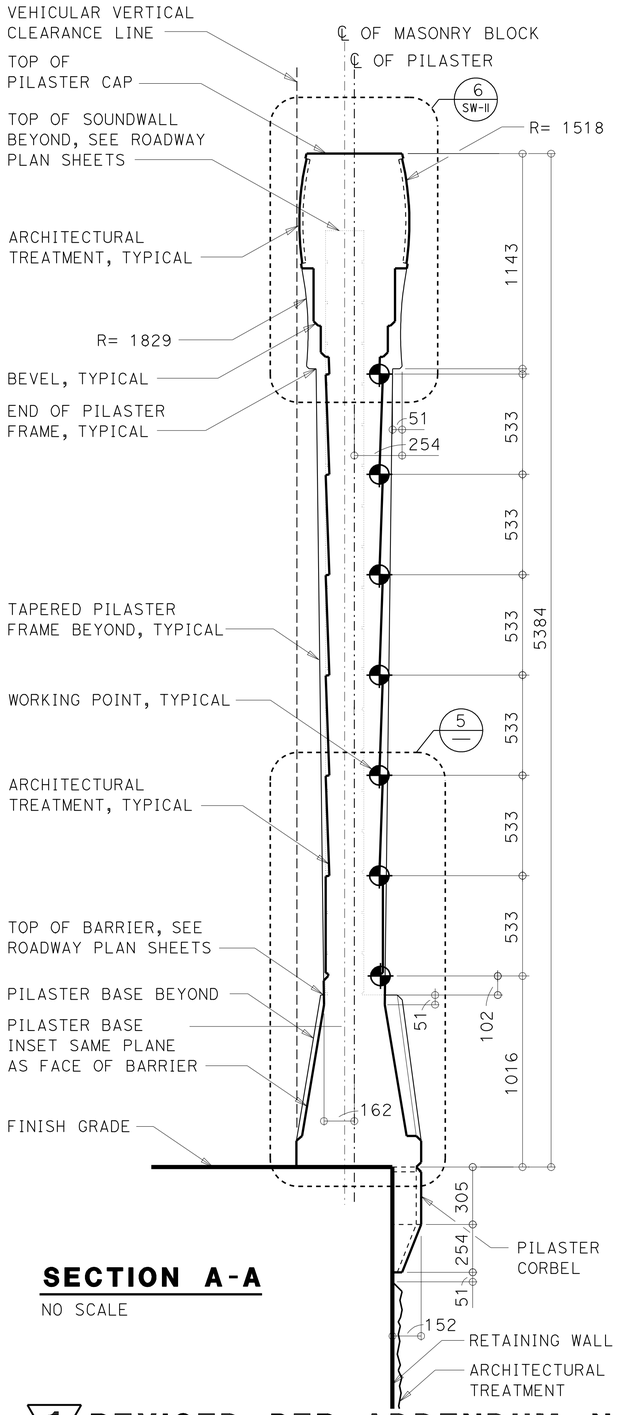

SECTION A-A
NO SCALE

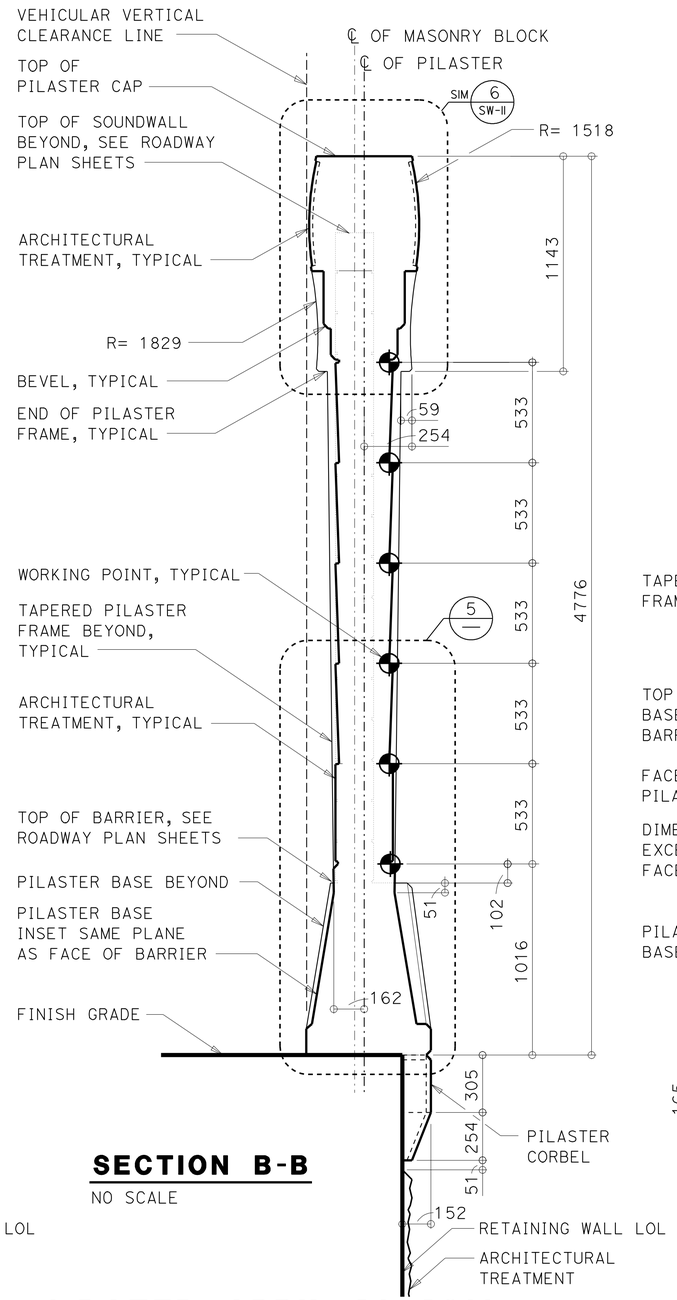

SECTION B-B
NO SCALE

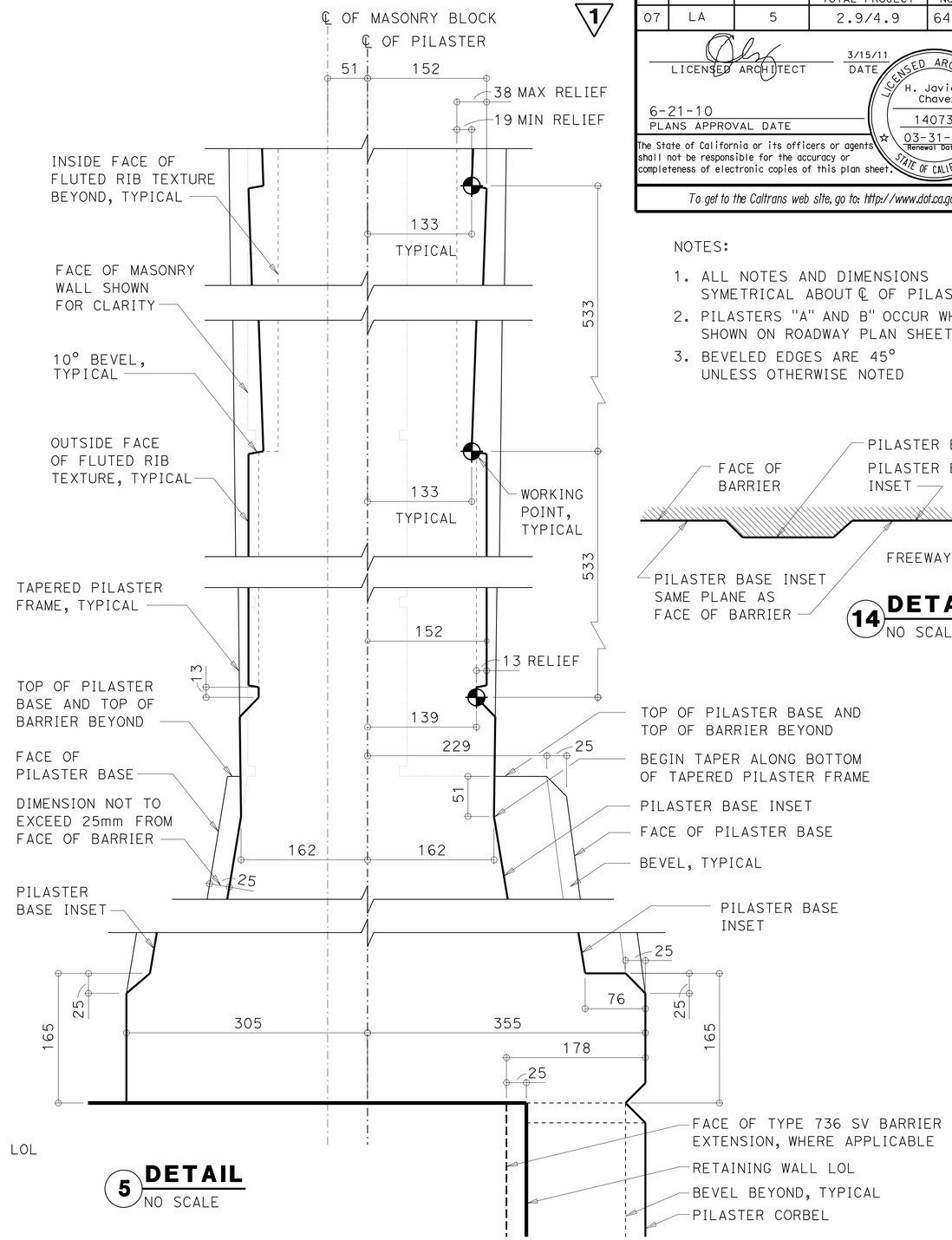

5 DETAIL
NO SCALE

NOTES:

1. ALL NOTES AND DIMENSIONS SYMETRICAL ABOUT ℄ OF PILASTER
2. PILASTERS "A" AND B" OCCUR WHERE SHOWN ON ROADWAY PLAN SHEETS
3. BEVELED EDGES ARE 45° UNLESS OTHERWISE NOTED

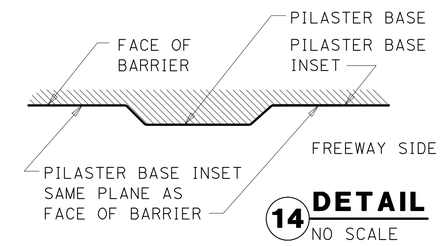

14 DETAIL
NO SCALE

1 REVISED PER ADDENDUM No. 1 DATED APRIL 21, 2011

DESIGN	BY H. Chavez	CHECKED I. Tasabia	
DETAILS	BY I. Tasabia	CHECKED H. Chavez	
QUANTITIES	BY	CHECKED	

STATE OF CALIFORNIA
DEPARTMENT OF TRANSPORTATION

DIVISION OF ENGINEERING SERVICES
BRIDGE ARCHITECTURE AND AESTHETICS

BRIDGE NO.
KILOMETER POST

TYPICAL SOUNDWALL PILASTER
SECTIONS AND DETAILS

SHEET **SW-9**

Caltrans Metric

ALL DIMENSIONS ARE IN MILLIMETERS UNLESS OTHERWISE SHOWN

ORIGINAL SCALE IN MILLIMETERS FOR REDUCED PLANS 0 10 20 30 40 50 60 70 80 90 100

CU 07
EA 2159C1

DISREGARD PRINTS BEARING EARLIER REVISION DATES

REVISION DATES — SHEET — OF

FILE => 72159cra009.add

USERNAME => trlenard DATE PLOTTED => 20-APR-2011 TIME PLOTTED => 13:34

NOTES:
1. ALL NOTES AND DIMENSIONS SYMETRICAL ABOUT ℄ OF PILASTER
2. PILASTERS "A" AND B" OCCUR WHERE SHOWN ON ROADWAY PLAN SHEETS
3. BEVELED EDGES ARE 45° UNLESS OTHERWISE NOTED

DIST	COUNTY	ROUTE	KILOMETER POST TOTAL PROJECT	SHEET No	TOTAL SHEETS
07	LA	5	2.9/4.9	648	1082

LICENSED ARCHITECT — DATE 3/15/11

6-21-10
PLANS APPROVAL DATE

LICENSED ARCHITECT H. Javier Chavez 14073 03-31-11 Renewal Date STATE OF CALIFORNIA

The State of California or its officers or agents shall not be responsible for the accuracy or completeness of electronic copies of this plan sheet.

To get to the Caltrans web site, go to: http://www.dot.ca.gov

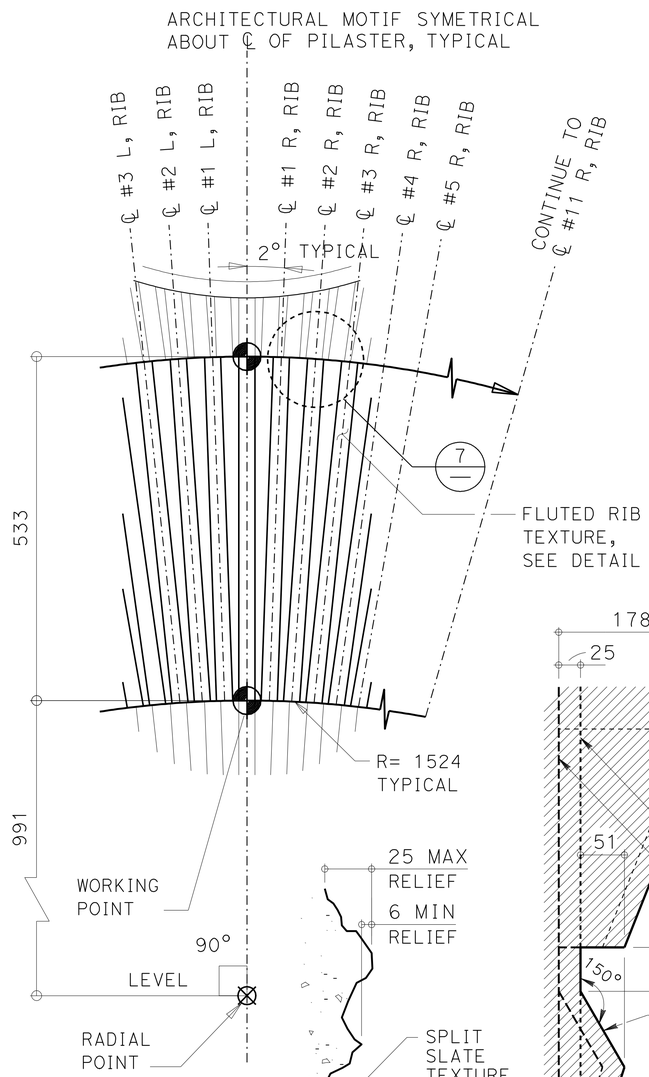

4 DETAIL
NO SCALE

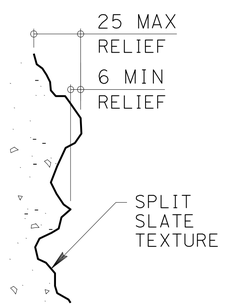

13 DETAIL
NO SCALE

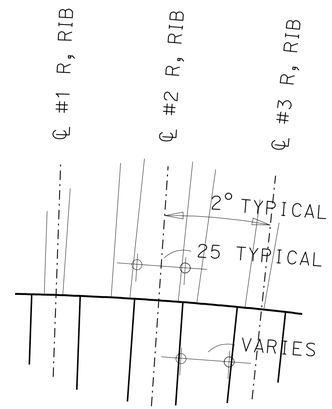

7 DETAIL
NO SCALE

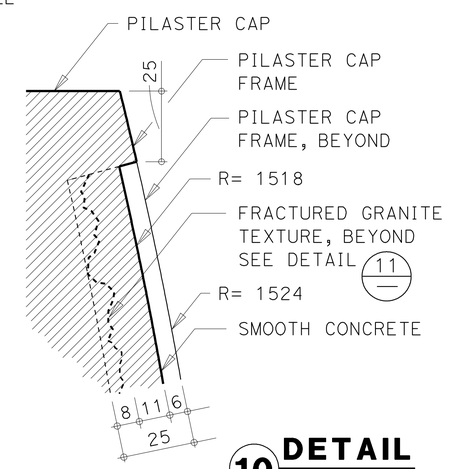

10 DETAIL
NO SCALE

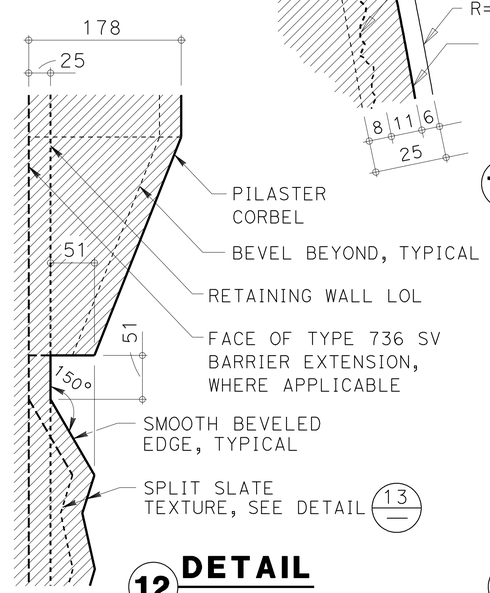

12 DETAIL
NO SCALE

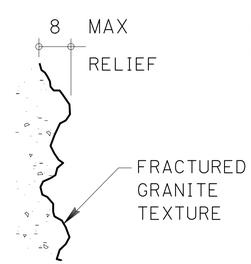

11 DETAIL
NO SCALE

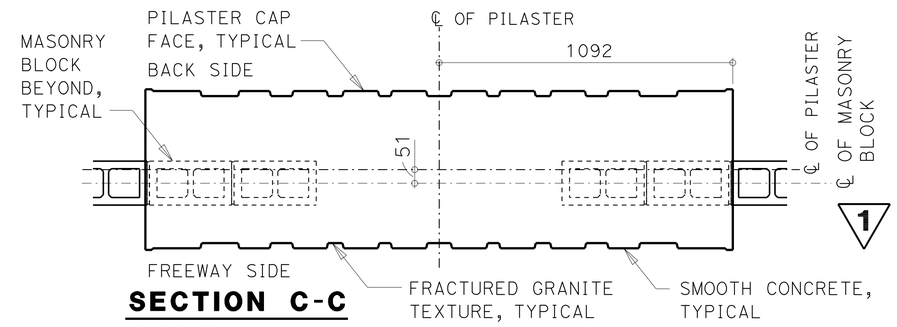

1

SECTION C-C
NO SCALE

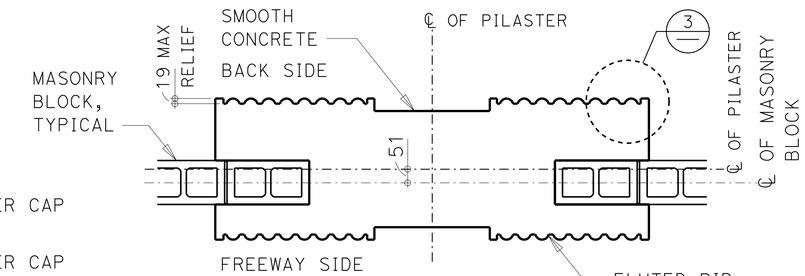

SECTION D-D
NO SCALE

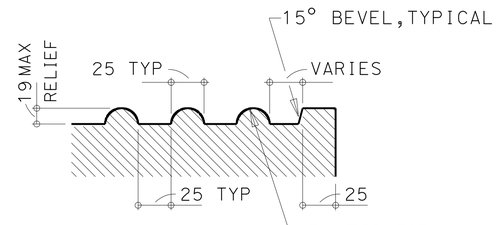

3 DETAIL
NO SCALE

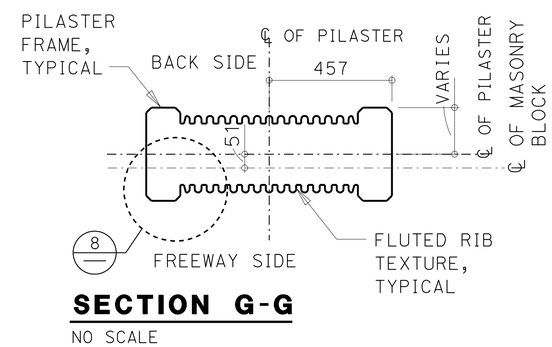

SECTION G-G
NO SCALE

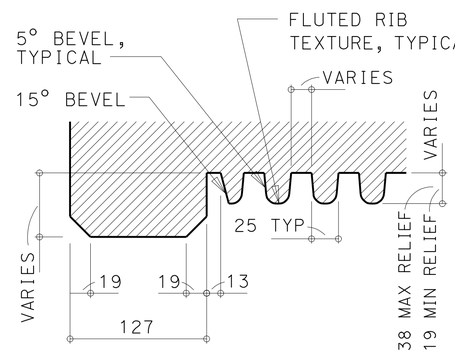

8 DETAIL
NO SCALE

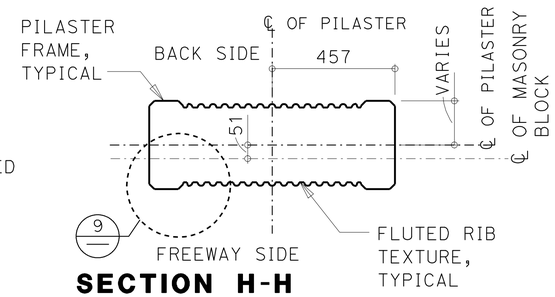

SECTION H-H
NO SCALE

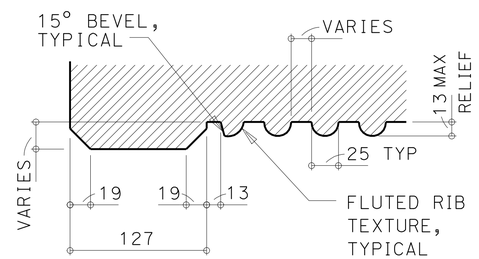

9 DETAIL
NO SCALE

1 REVISED PER ADDENDUM No. 1 DATED APRIL 21, 2011

Caltrans Metric

DESIGN	BY H. Chavez	CHECKED I. Tasabia	
DETAILS	BY I. Tasabia	CHECKED H. Chavez	
QUANTITIES	BY	CHECKED	

STATE OF CALIFORNIA
DEPARTMENT OF TRANSPORTATION

DIVISION OF ENGINEERING SERVICES
BRIDGE ARCHITECTURE AND AESTHETICS

BRIDGE NO.
KILOMETER POST

TYPICAL SOUNDWALL PILASTER
SECTIONS/DETAILS

SHEET SW-10

ALL DIMENSIONS ARE IN MILLIMETERS UNLESS OTHERWISE SHOWN

ORIGINAL SCALE IN MILLIMETERS FOR REDUCED PLANS 0 10 20 30 40 50 60 70 80 90 100

CU 07
EA 2159C1

DISREGARD PRINTS BEARING EARLIER REVISION DATES

REVISION DATES — SHEET — OF

FILE => 72159cra010.add

USERNAME => trlehord DATE PLOTTED => 20-APR-2011 TIME PLOTTED => 13:35

DIST	COUNTY	ROUTE	KILOMETER POST TOTAL PROJECT	SHEET No	TOTAL SHEETS
07	LA	5	2.9/4.9	649	1082

LICENSED ARCHITECT — DATE 3/15/11

6-21-10
PLANS APPROVAL DATE

LICENSED ARCHITECT H. Javier Chavez 14073 03-31-11 Renewal Date STATE OF CALIFORNIA

The State of California or its officers or agents shall not be responsible for the accuracy or completeness of electronic copies of this plan sheet.

To get to the Caltrans web site, go to: http://www.dot.ca.gov

NOTES:

1. ALL NOTES AND DIMENSIONS SYMETRICAL ABOUT ℄ OF PILASTER
2. PILASTERS "A" AND B" OCCUR WHERE SHOWN ON ROADWAY PLAN SHEETS
3. BEVELED EDGES ARE 45° UNLESS OTHERWISE NOTED

1

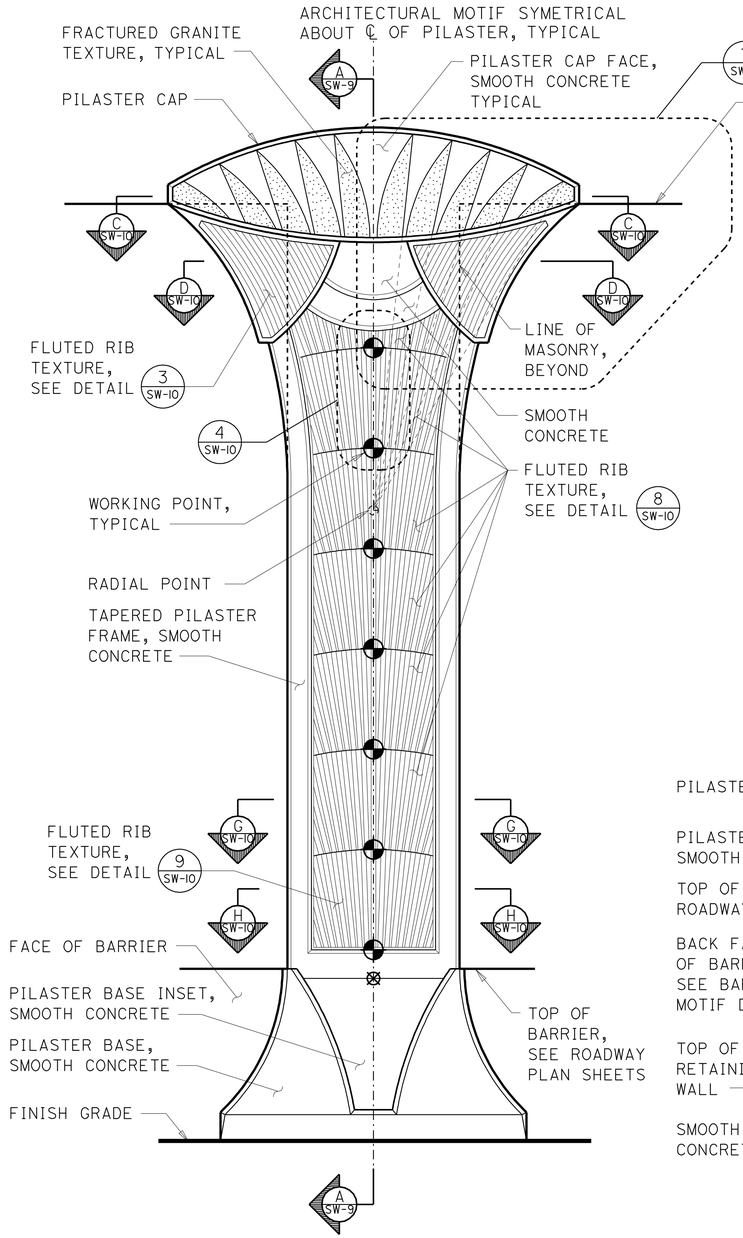

PILASTER ARCHITECTURAL MOTIF

NO SCALE (FREEWAY SIDE)

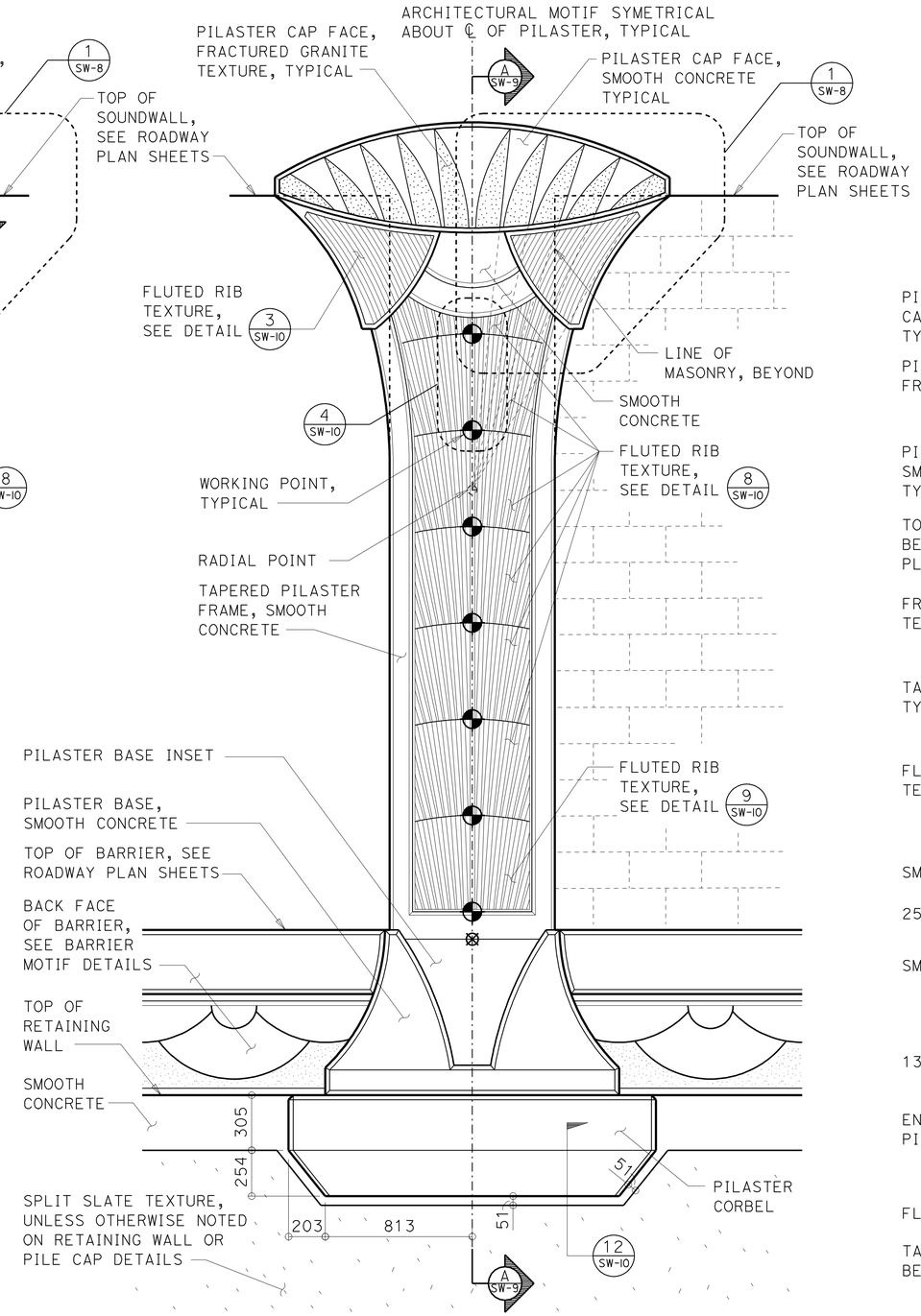

PILASTER ARCHITECTURAL MOTIF

NO SCALE (BACK SIDE)

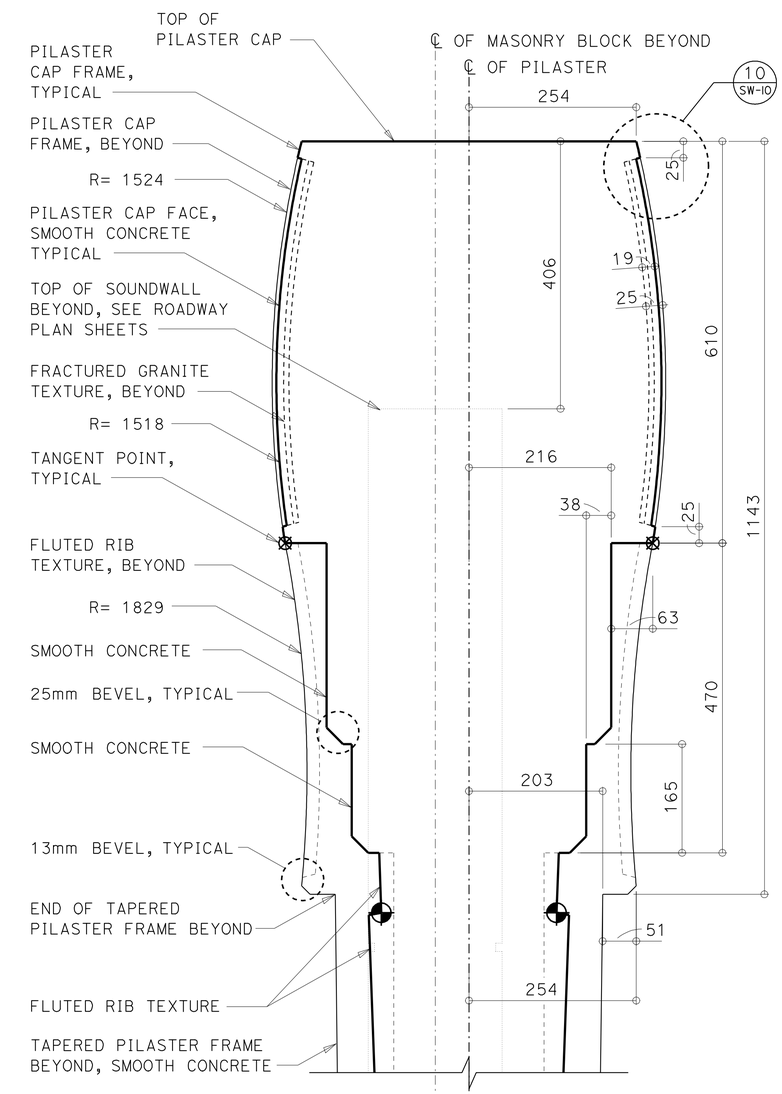

6 **DETAIL**

NO SCALE

1 **REVISED PER ADDENDUM No. 1 DATED APRIL 21, 2011**

DESIGN	BY H. Chavez	CHECKED I. Tasabia	STATE OF CALIFORNIA DEPARTMENT OF TRANSPORTATION	DIVISION OF ENGINEERING SERVICES BRIDGE ARCHITECTURE AND AESTHETICS	BRIDGE NO.
DETAILS	BY I. Tasabia	CHECKED H. Chavez			KILOMETER POST
QUANTITIES	BY	CHECKED			

TYPICAL SOUNDWALL PILASTER

ELEVATIONS AND DETAILS

SHEET SW-11

Caltrans Metric

ALL DIMENSIONS ARE IN MILLIMETERS UNLESS OTHERWISE SHOWN

ORIGINAL SCALE IN MILLIMETERS FOR REDUCED PLANS 0 10 20 30 40 50 60 70 80 90 100

CU 07
EA 2159C1

DISREGARD PRINTS BEARING EARLIER REVISION DATES

REVISION DATES — SHEET — OF

FILE => 72159cra011.add

USERNAME => trlenard DATE PLOTTED => 20-APR-2011 TIME PLOTTED => 13:35

DIST	COUNTY	ROUTE	KILOMETER POST TOTAL PROJECT	SHEET NO.	TOTAL SHEETS
07	LA	5	2.9/4.9	769A	1082

Caltrans Metric

REGISTERED CIVIL ENGINEER

June 6, 2008
PLANS APPROVAL DATE

REGISTERED PROFESSIONAL ENGINEER Hector David Cordova No. C41957 Exp. 3-31-10 CIVIL STATE OF CALIFORNIA

The State of California or its officers or agents shall not be responsible for the accuracy or completeness of electronic copies of this plan sheet.

To get to the Caltrans web site, go to: http://www.dot.ca.gov

1

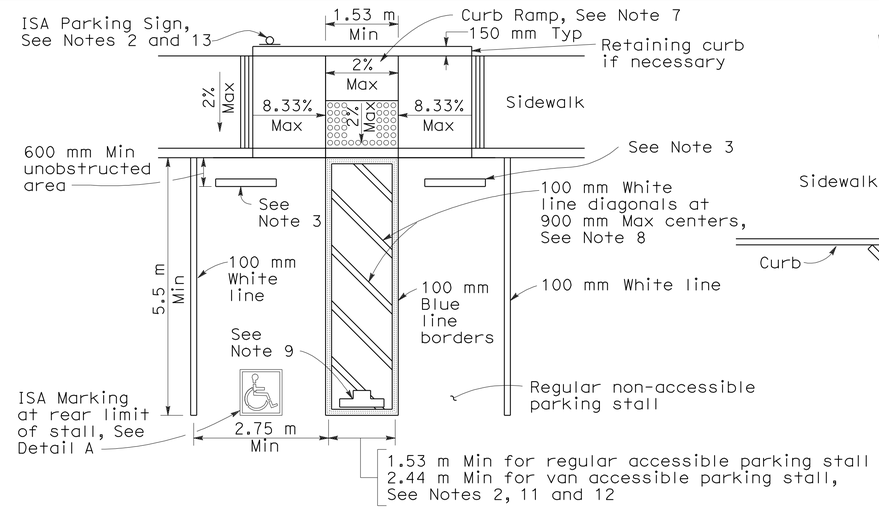

SINGLE PARKING STALL

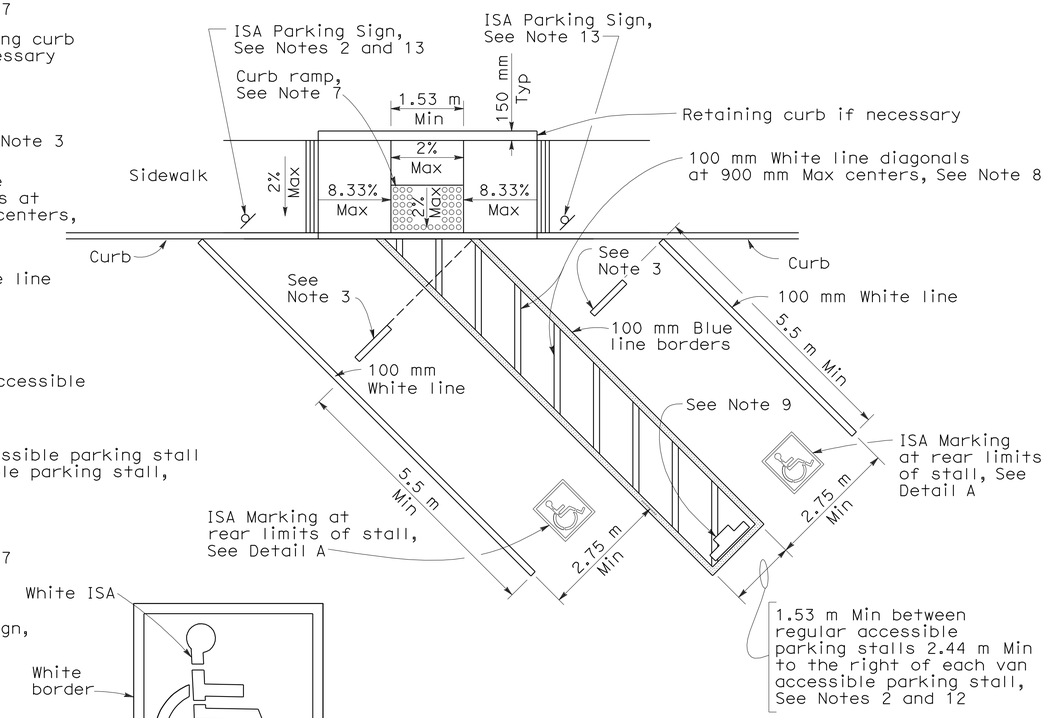

DIAGONAL DOUBLE PARKING STALLS

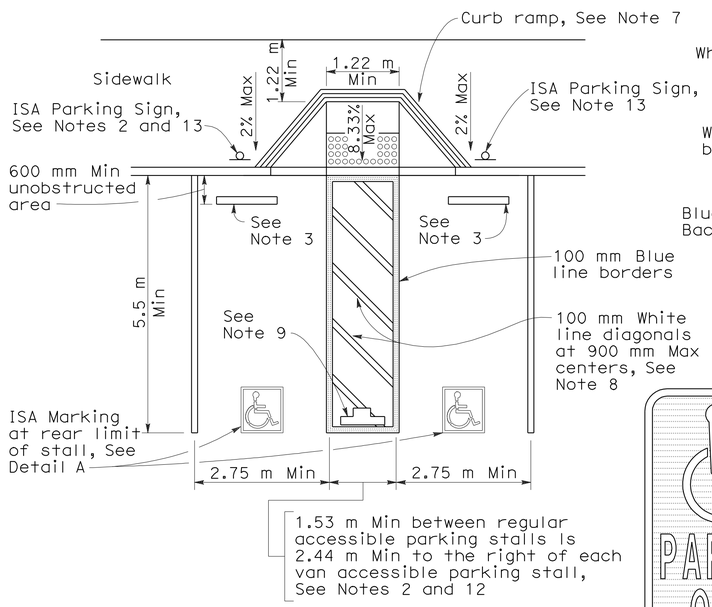

DOUBLE PARKING STALL

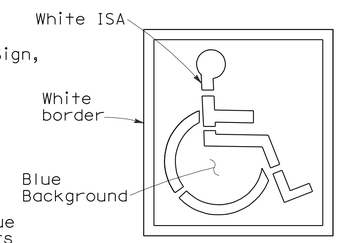

ISA MARKING
See Revised Std Plan RSP A24C

DETAIL A

TABLE A

Total Number of Parking Spaces or Stalls	Minimum Number of Disabled Accessible Parking Spaces or Stalls
1-25	1
26-50	2
51-75	3
76-100	4
101-150	5
151-200	6
201-300	7
301-400	8
401-500	9
501-1000	2 percent of total
Greater than 1001	20 plus 1 for each 100 or fraction thereof over 1001

SIGN R99 (CA)

PLAQUE R99B (CA)

SIGN R99 (CA) with PLAQUE R99B (CA)
See Note 6

SIGN R99C (CA)
See Note 6

UNAUTHORIZED VEHICLES PARKED IN DESIGNATED ACCESSIBLE SPACES NOT DISPLAYING DISTINGUISHING PLACARDS OR SPECIAL LICENSE PLATES ISSUED FOR PERSONS WITH DISABILITIES WILL BE TOWED AWAY AT THE OWNER'S EXPENSE

TOWED VEHICLES MAY BE RECLAIMED AT
(Insert Address)

OR BY TELEPHONING
(Insert Telephone Number)

SIGN R100B (CA)
See Note 10

SIGN R7-8b
See Notes 2 and 6

OFF-STREET PARKING SIGNS
(Parking lot or garage)
See Note 6

ISA = International Symbol of Accessibility

NOTES:

To accompany plans dated 6-21-10

1. Accessible parking spaces serving a particular building shall be located on the shortest accessible route of travel from adjacent parking to an accessible entrance. In parking facilities that do not serve a particular building, accessible parking shall be located on the shortest accessible route of travel to an accessible pedestrian entrance of the parking facility.
2. One in every eight accessible off-street parking stalls, but not less than one, shall be served by an accessible aisle of 2.44 m minimum width and shall be signed van accessible. The R7-8b sign shall be mounted below the R99B (CA) plaque or the R99C (CA) sign.
3. In each parking stall, a curb or bumper shall be provided and located to prevent encroachment of vehicles over the required width of walkways. Parking stalls shall be so located that persons with disabilities are not compelled to wheel or walk behind parked cars other than their own.
4. Surface slopes of accessible off-street parking stalls shall be the minimum possible and shall not exceed 2 percent in any direction.
5. Table A shall be used to determine the required number of accessible parking stalls in each parking lot or garage.
6. Where Plaque R99B (CA), Sign R99C (CA) or Sign R7-8b are installed, the bottom of the sign or plaque panel shall be a minimum of 2.1 m above the surrounding surface.
7. Curb ramps shall conform to the details shown on Revised Standard Plan RSP A88A.
8. Blue paint, instead of white may be used for marking accessibility aisles in areas where snow may cause white markings to not be visible.
9. The words "NO PARKING", shall be painted in white letters no less than 305 mm high and located so that it is visible to traffic enforcement officials. See Revised Standard Plan RSP A90B for details of the "NO PARKING" pavement marking.
10. A R100B (CA) sign shall be posted in a conspicuous place at each entrance to off-street parking facilities or immediately adjacent to and visible from each stall. The sign shall include the address where the towed vehicle may be reclaimed and the telephone number of the local traffic law enforcement agency.
11. Where a single (non-van) accessible parking space is provided, the loading and unloading access aisle shall be on the passenger side of the vehicle as the vehicle is going forward into the parking space.
12. Where a van accessible parking space is provided, the loading and unloading access aisle shall be 2.44 m wide minimum, and shall be on the passenger side of the vehicle as the vehicle is going forward into the parking space.
13. Accessible Parking Only Sign shall be Sign R99C (CA) or Sign R99 (CA) with Plaque R99B (CA).

STATE OF CALIFORNIA
DEPARTMENT OF TRANSPORTATION

ACCESSIBLE PARKING OFF-STREET

NO SCALE

ALL DIMENSIONS ARE IN MILLIMETERS UNLESS OTHERWISE SHOWN

RSP A90A DATED JUNE 6, 2008 SUPERSEDES RSP A90A DATED DECEMBER 16, 2005 AND STANDARD PLAN A90A DATED JULY 1, 2004-PAGE 119 OF THE STANDARD PLANS BOOK DATED JULY 2004.

1 **ADDED PER ADDENDUM No. 1 DATED APRIL 21, 2011**

REVISED STANDARD PLAN RSP A90A

2004 REVISED Std PLAN RSP A90A

6-3-08

DIST	COUNTY	ROUTE	KILOMETER POST TOTAL PROJECT	SHEET No	TOTAL SHEETS
07	LA	5	2.9/4.9	1070	1082

Daniel L. Texler 3-17-11
REGISTERED CIVIL ENGINEER DATE

6-21-10
PLANS APPROVAL DATE

REGISTERED PROFESSIONAL ENGINEER Daniel L. Texler No. 49792 Exp. 9-30-12 CIVIL STATE OF CALIFORNIA

The State of California or its officers or agents shall not be responsible for the accuracy or completeness of electronic copies of this plan sheet.

Caltrans now has a web site! To get to the web site, go to: http://www.dot.ca.gov

1

NOTE: Install utility conduits as req'd, (not shown) for size and other data, see "ROAD PLANS"

GENERAL NOTES
LOAD FACTOR DESIGN

DESIGN: BRIDGE DESIGN SPECIFICATIONS (1996 AASHTO with Interims and Revisions by CALTRANS)

REINFORCED CONCRETE: f_y = 420 MPa
f'_c = 25 MPa

TIE RODS: Size = #19 Rebar, Grade 420 (Galvanized)

SHOTCRETE: f'_c = 22.5 MPa

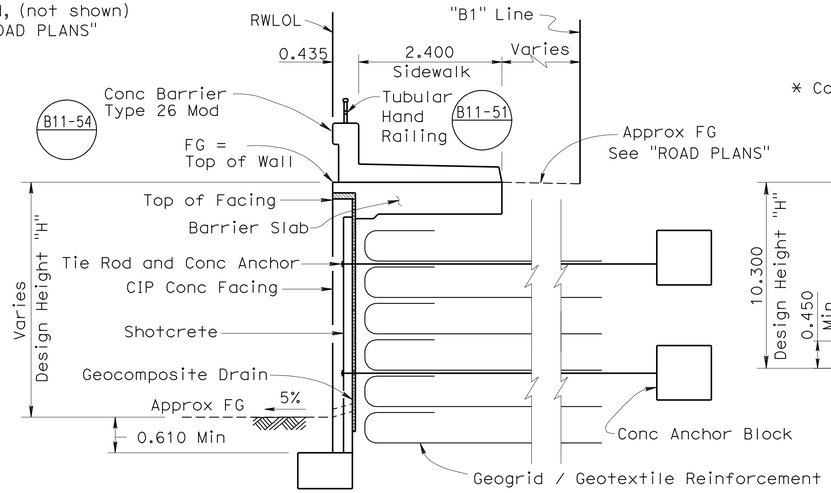

GEOSYNTHETIC REINFORCED EMBANKMENT WALL TYPICAL SECTION

1:50

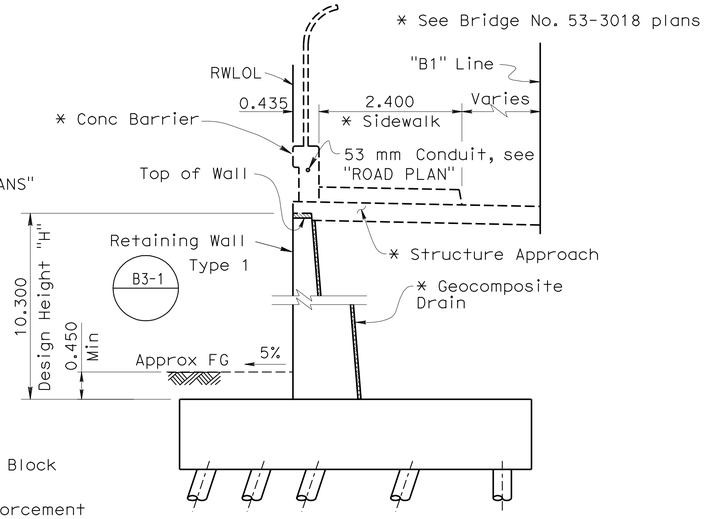

TYPE 1 WALL TYPICAL SECTION

1:50

STANDARD PLANS
Dated July 2004

A10A	ACRONYMS AND ABBREVIATIONS (A-L)
A10B	ACRONYMS AND ABBREVIATIONS (M-Z)
A62B	LIMITS OF PAYMENT FOR EXCAVATION AND BACKFILL- BRIDGE SURCHARGE AND WALL
BO-3	BRIDGE DETAILS
B2-5	PILE DETAILS CLASS 400 AND CLASS 625 ALTERNATIVE "V"
B3-1	RETAINING WALL TYPE 1
B3-8	RETAINING WALL DETAILS NO. 1
B11-51	TUBULAR HAND RAILING
B11-54	CONCRETE BARRIER TYPE 26

Standard Plan Sheet No.
Detail No.

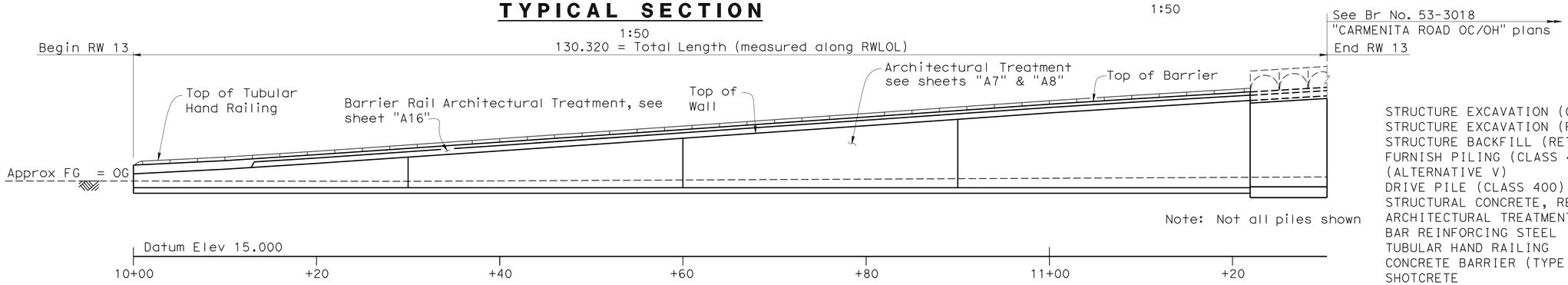

MIRRORED ELEVATION

1:250

QUANTITIES

STRUCTURE EXCAVATION (CONTAMINATED)	47	m3
STRUCTURE EXCAVATION (RETAINING WALL)	1099	m3
STRUCTURE BACKFILL (RETAINING WALL)	1993	m3
FURNISH PILING (CLASS 400) (ALTERNATIVE V)	425	m
DRIVE PILE (CLASS 400) (ALTERNATIVE V)	29	EA
STRUCTURAL CONCRETE, RETAINING WALL	257	m3
ARCHITECTURAL TREATMENT	657	m2
BAR REINFORCING STEEL (RETAINING WALL)	23 517	kg
TUBULAR HAND RAILING	122	m
CONCRETE BARRIER (TYPE 26 MOD)	122	m
SHOTCRETE	94	m3
STRUCTURAL CONCRETE, BARRIER SLAB	171	m3
GEOSYNTHETIC REINFORCED ENBANKMENT	559	m3

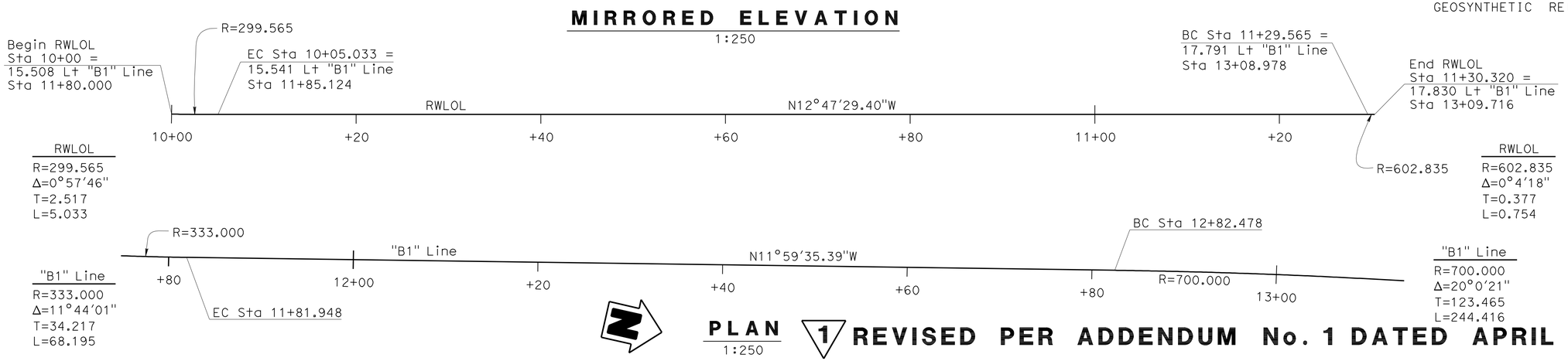

INDEX TO PLANS

Sheet No.	Title
1	GENERAL PLAN
2	STRUCTURE PLAN
3	RETAINING WALL DETAILS NO. 1
4	RETAINING WALL DETAILS NO. 2

PLAN

1:250

1 REVISED PER ADDENDUM No. 1 DATED APRIL 21, 2011

Caltrans Metric

RAMIN RASHEDI
DESIGN ENGINEER

	BY	CHECKED
DESIGN	Haitao Liu/MO	D.Menzmer/D.Texler
DETAILS	T. Bittermann	D.Menzmer/D.Texler
QUANTITIES	M. Okimura	D. Tavatli

LOAD FACTOR DESIGN	LIVE LOADING: HS20-44 AND ALTERNATIVE AND PERMIT DESIGN LOAD		
LAYOUT	BY Haitao Liu	CHECKED U. Inyang	
SPECIFICATIONS	BY M. Pan	PLANS AND SPECS COMPARED	

STATE OF CALIFORNIA
DEPARTMENT OF TRANSPORTATION

DIVISION OF ENGINEERING SERVICES
STRUCTURE DESIGN
DESIGN BRANCH 11

BRIDGE NO. RW13
KILOMETER POST 3.88

RETAINING WALL 13
GENERAL PLAN

ALL DIMENSIONS ARE IN METERS UNLESS OTHERWISE SHOWN

ORIGINAL SCALE IN MILLIMETERS FOR REDUCED PLANS 0 10 20 30 40 50 60 70 80 90 100

CU 07225
EA 2159C1

DISREGARD PRINTS BEARING EARLIER REVISION DATES

REVISION DATES: 12-2-08 1-14-10 2-9-11 3-2-11 3/15/11 7-02-09 12-28-09 1-7-10

SHEET 1 OF 4

FILE => 53-rw13-a-gp.dgn

STRUCTURES DESIGN GENERAL PLAN SHEET (METRIC) (REV.03-17-04)

USERNAME => ttmikest DATE PLOTTED => 21-APR-2011 TIME PLOTTED => 11:22

DIST	COUNTY	ROUTE	KILOMETER POST TOTAL PROJECT	SHEET No	TOTAL SHEETS
07	LA	5	2.9/4.9	1071	1082

1

Daniel L. Texler 3-17-11
REGISTERED CIVIL ENGINEER DATE

6-21-10
PLANS APPROVAL DATE

REGISTERED PROFESSIONAL ENGINEER Daniel L Texler No. 49792 Exp. 9-30-12 CIVIL STATE OF CALIFORNIA

The State of California or its officers or agents shall not be responsible for the accuracy or completeness of electronic copies of this plan sheet.

To get to the Caltrans web site, go to: http://www.dot.ca.gov

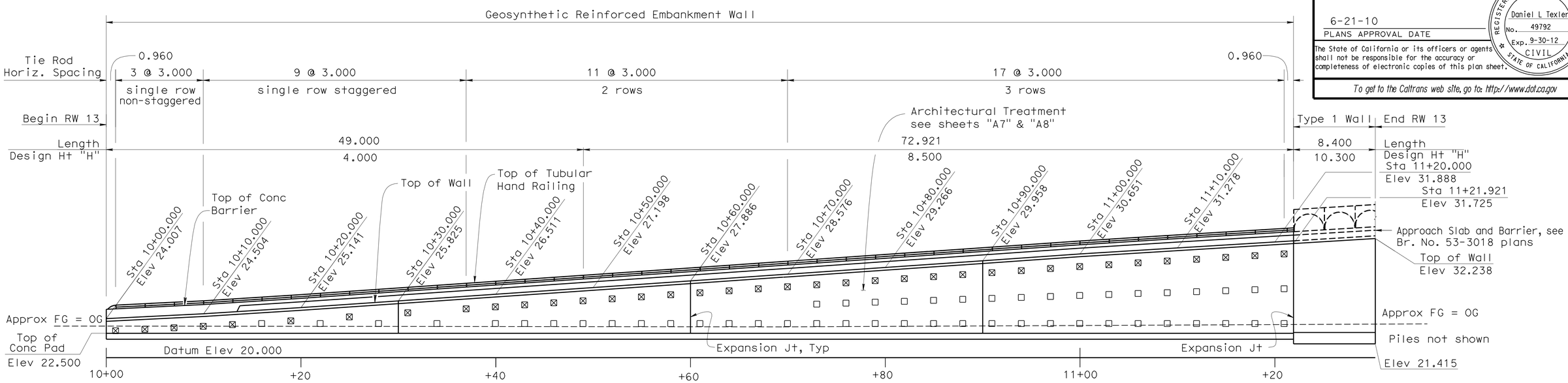

MIRRORED ELEVATION

1:200

B0-3

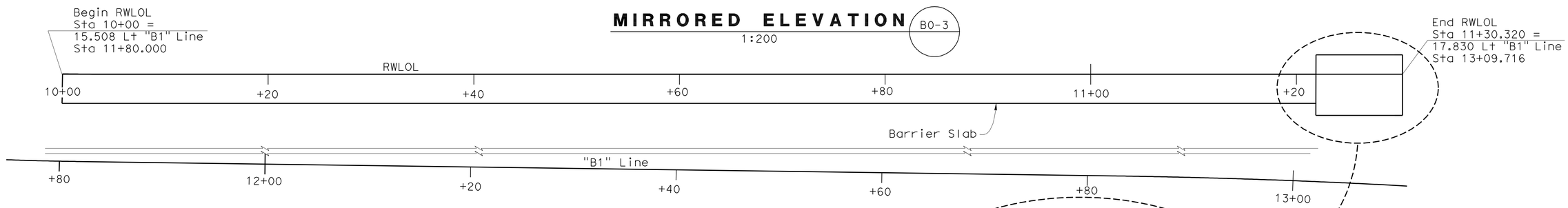

PLAN

1:200

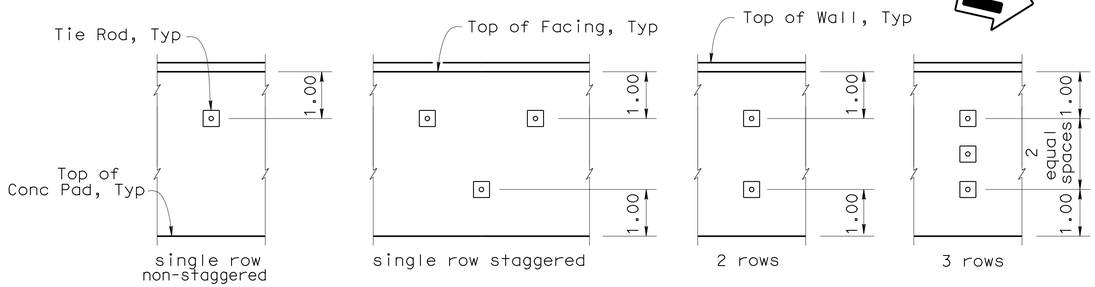

TIE ROD VERTICAL SPACING

No Scale

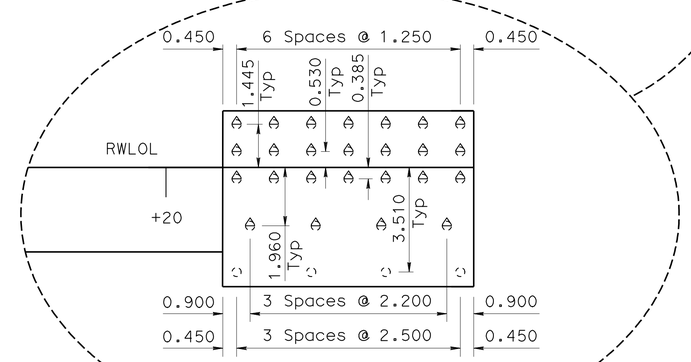

PILE LAYOUT

1:100

LEGEND:

- Indicates Vertical Piles
- Indicates Battered 1:3 Piles
- Indicates Tie Rod Type 'A'
- Indicates Tie Rod Type 'B'

NOTES:

Piles are Class 400, Alternative "V" closed-end with 60° conical tip (B2-5)

Pile Tip shall be 14.0 m below bottom of wall footings

Pile spacing measured along RWLOL

Expansion Joints shall be placed in CIP Facing only, spaced at approx. 30.0 m and located 0.900 m from nearest tie rod. (B0-3 / 3-4)

1 REVISED PER ADDENDUM NO. 1 DATED APRIL 21, 2011

Caltrans Metric

	BY	CHECKED
DESIGN	Haitao Liu/MO	D. Texler
DETAILS	T. Bittermann	D. Texler
QUANTITIES	M. Okimura	D. Tavatli

STATE OF CALIFORNIA
DEPARTMENT OF TRANSPORTATION

DIVISION OF ENGINEERING SERVICES
STRUCTURE DESIGN
DESIGN BRANCH 11

BRIDGE NO. RW13
KILOMETER POST 3.88

RETAINING WALL 13
STRUCTURE PLAN

ALL DIMENSIONS ARE IN METERS UNLESS OTHERWISE SHOWN

ORIGINAL SCALE IN MILLIMETERS FOR REDUCED PLANS 0 10 20 30 40 50 60 70 80 90 100

CU 07225
EA 2159C1

DISREGARD PRINTS BEARING EARLIER REVISION DATES

REVISION DATES: 10-8-08 2-13-11 3-15-11 5-4-09 5-28-09 7-02-09 12-28-09 1-7-10 2-9-11

SHEET 2 OF 4

STRUCTURES DESIGN DETAIL SHEET (METRIC) (REV.03-17-04)

FILE => 53-rw13-c-sp01.dgn

USERNAME => trmikesl DATE PLOTTED => 20-APR-2011 TIME PLOTTED => 13:50

DIST	COUNTY	ROUTE	KILOMETER POST TOTAL PROJECT	SHEET No	TOTAL SHEETS
07	LA	5	2.9/4.9	1072	1082

1

Daniel L. Texler 3-17-11
REGISTERED CIVIL ENGINEER DATE

6-21-10
PLANS APPROVAL DATE

REGISTERED PROFESSIONAL ENGINEER Daniel L.Texler No. 49792 Exp. 9-30-12 CIVIL STATE OF CALIFORNIA

The State of California or its officers or agents shall not be responsible for the accuracy or completeness of electronic copies of this plan sheet.

To get to the Caltrans web site, go to: http://www.dot.ca.gov

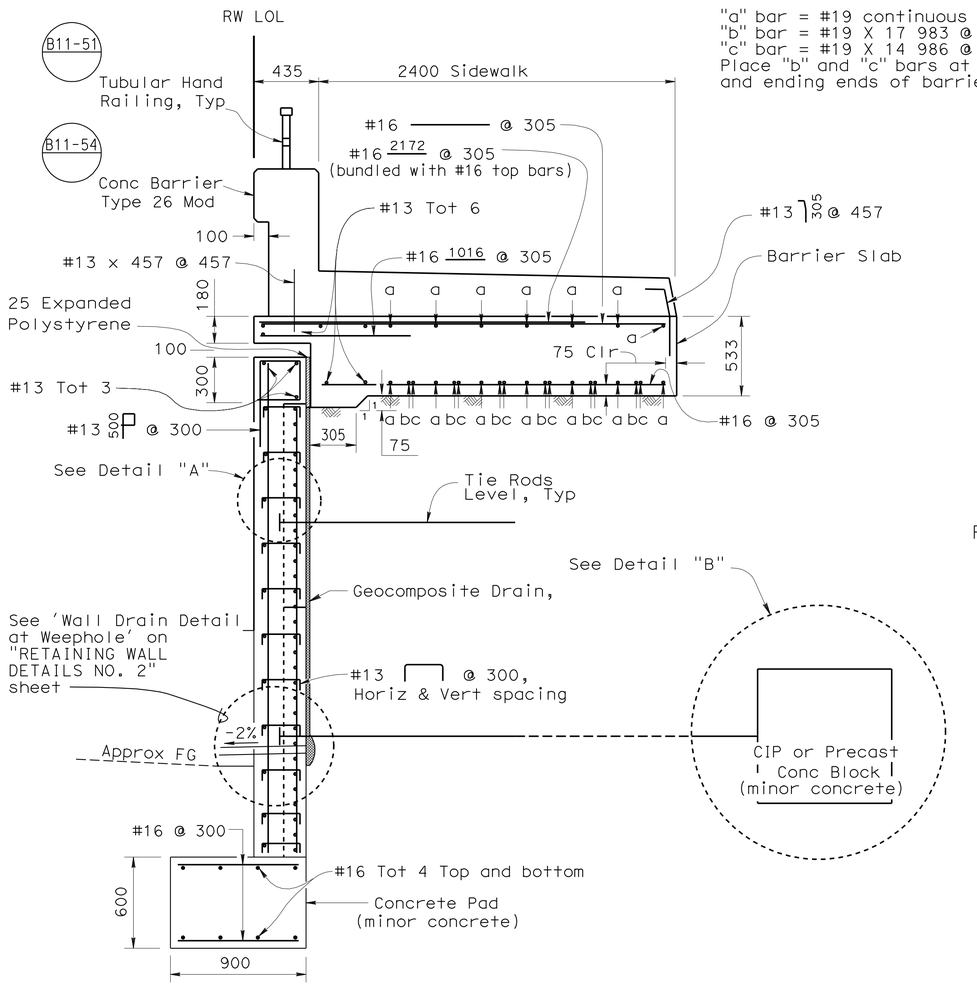

NOTES:

1. Clearance to reinforcing steel in concrete barrier to be 25 mm.
2. Not all barrier reinforcement shown.
3. No expansion joints in concrete barrier or barrier slab within wall limits.
4. Geosynthetic Reinforced Embankment not shown.
5. Type 26 Mod Barrier from Sta 10+13.716 to Sta 11+21.921 shown.
6. For Type 26 Mod Barrier from Sta 10+00 to Sta 10+13.716, see "BARRIER TYPE 26 (MOD)" detail.
7. Architectural treatment not shown.

TYPICAL SECTION

1:20

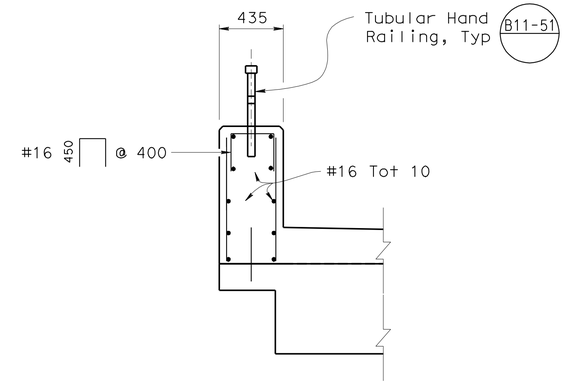

RWLOL Sta 10+00.000 to RWLOL Sta 10+13.716

BARRIER TYPE 26 (MOD)

1:20

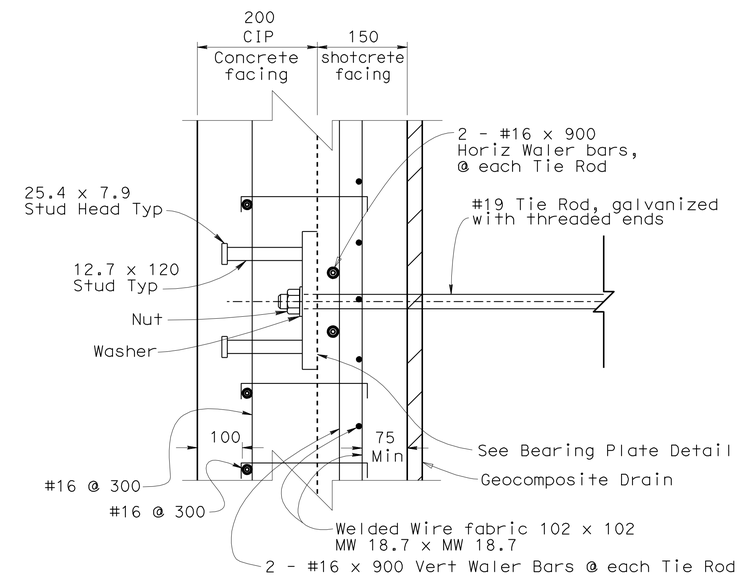

DETAIL A

NO SCALE

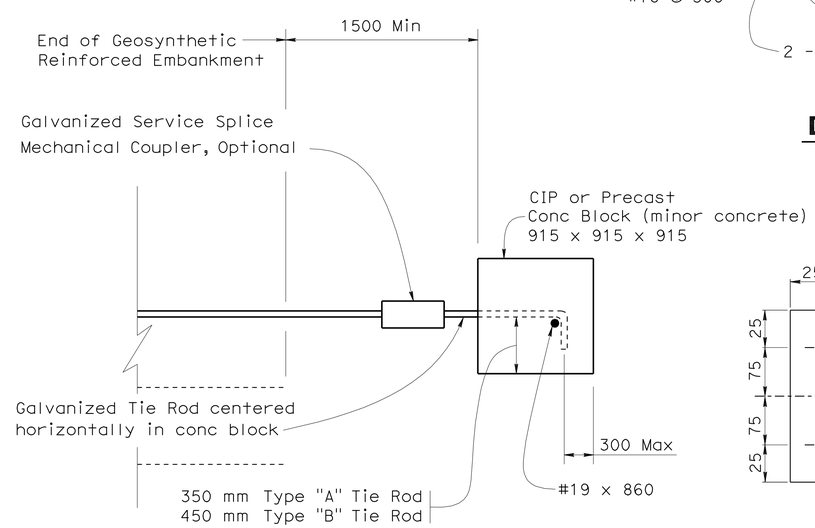

DETAIL "B"

No Scale

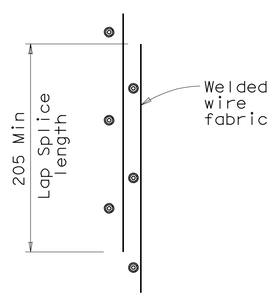

LAP SPLICE

No Scale

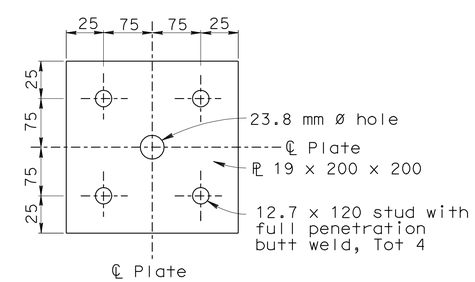

BEARING PLATE DETAIL

No Scale

1 REVISED PER ADDENDUM NO. 1 DATED APRIL 21, 2011

DESIGN	BY Haitao Liu/MO	CHECKED D.Texler
DETAILS	BY T.Bittermann	CHECKED D.Texler
QUANTITIES	BY M.Okimura	CHECKED D.Tavatli

STATE OF CALIFORNIA DEPARTMENT OF TRANSPORTATION

DIVISION OF ENGINEERING SERVICES STRUCTURE DESIGN DESIGN BRANCH 11

BRIDGE NO. RW13
KILOMETER POST 3.88

RETAINING WALL 13
RETAINING WALL DETAILS NO 1

ALL DIMENSIONS ARE IN MILLIMETERS UNLESS OTHERWISE SHOWN

ORIGINAL SCALE IN MILLIMETERS FOR REDUCED PLANS 0 10 20 30 40 50 60 70 80 90 100

CU 07225
EA 2159C1

DISREGARD PRINTS BEARING EARLIER REVISION DATES

REVISION DATES: 2-3-09 3/15/11 8/3/09 12/29/09 01/05/10 01/07/10 2-10-11 3/2/11

SHEET 3 OF 4

FILE => 53-rw13-c-sp02.dgn

STRUCTURES DESIGN DETAIL SHEET (METRIC) (REV.03-17-04)

USERNAME => trmikes1 DATE PLOTTED => 20-APR-2011 TIME PLOTTED => 13:50

DIST	COUNTY	ROUTE	KILOMETER POST TOTAL PROJECT	SHEET No	TOTAL SHEETS
07	LA	5	2.9/4.9	1073	1082

1

Daniel L. Texler 3-17-11
REGISTERED CIVIL ENGINEER DATE

6-21-10
PLANS APPROVAL DATE

REGISTERED PROFESSIONAL ENGINEER Daniel L Texler No. 49792 Exp. 9-30-12 CIVIL STATE OF CALIFORNIA

The State of California or its officers or agents shall not be responsible for the accuracy or completeness of electronic copies of this plan sheet.

To get to the Caltrans web site, go to: http://www.dot.ca.gov

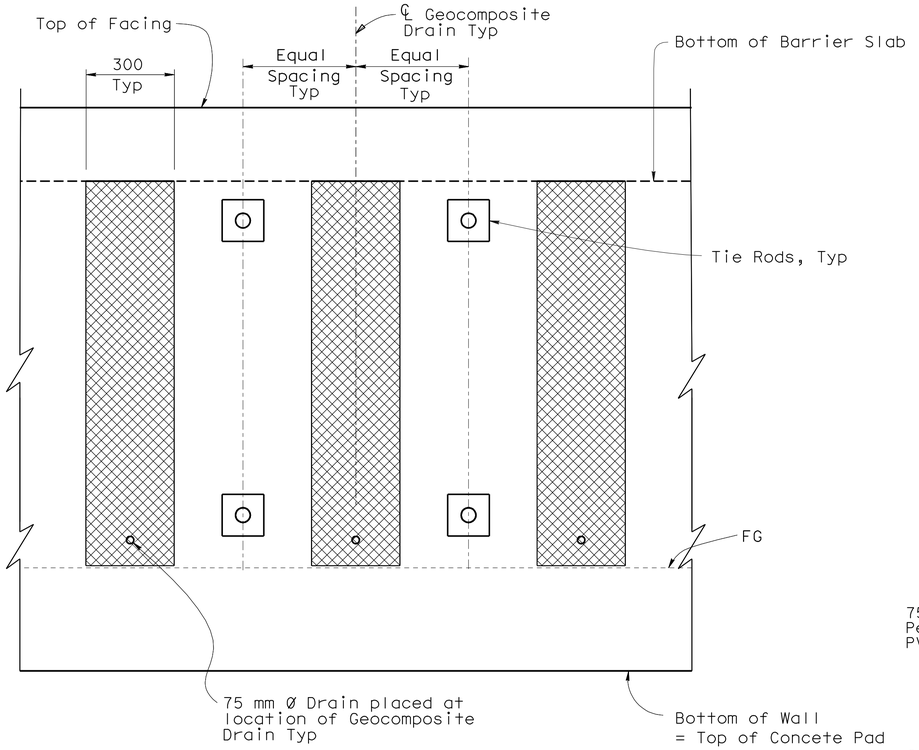

PART ELEVATION (TYPICAL)

NO SCALE

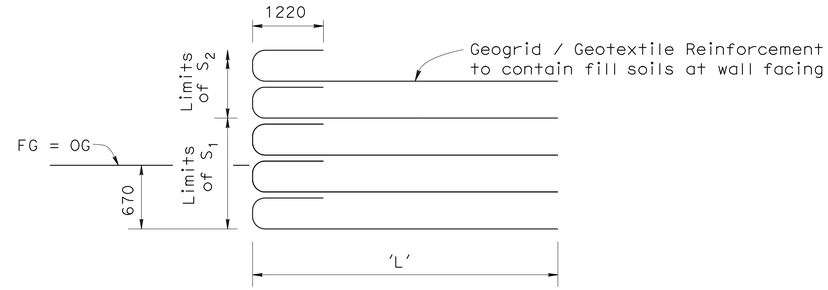

Design "H"	Reinforcement Length 'L'	Vert Reinforcement Spacing		Limits of
		S_1	S_2	S_1
4000	4000	330	670	670
8500	8000	330	670	4670

GEOSYNTHETIC REINFORCED EMBANKMENT

NO SCALE

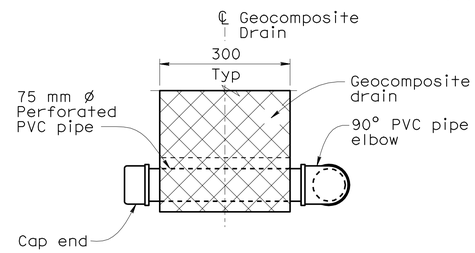

VIEW A-A

NO SCALE

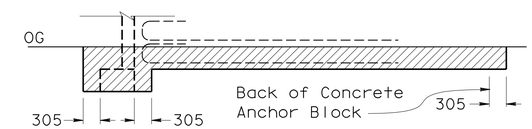

STRUCTURE EXCAVATION

NO SCALE

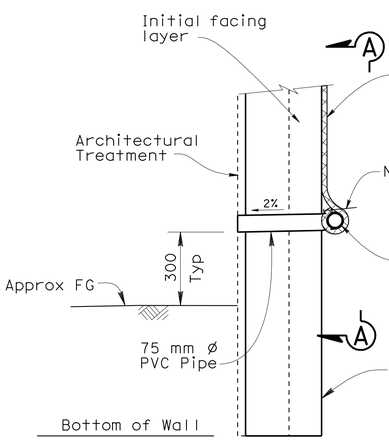

WALL DRAIN DETAIL AT WEEPHOLE OPTION A

NO SCALE

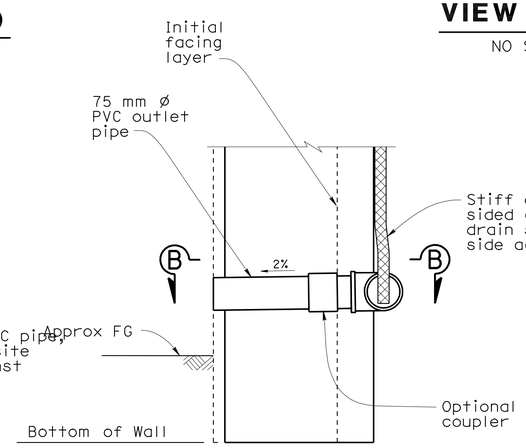

WALL DRAIN DETAIL AT WEEPHOLE OPTION B

NO SCALE

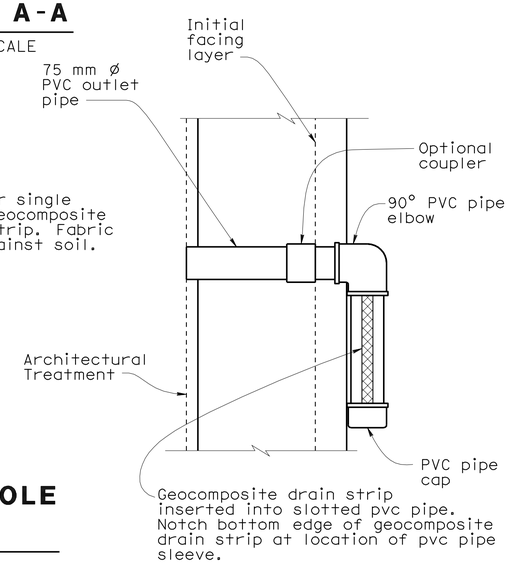

VIEW B-B

NO SCALE

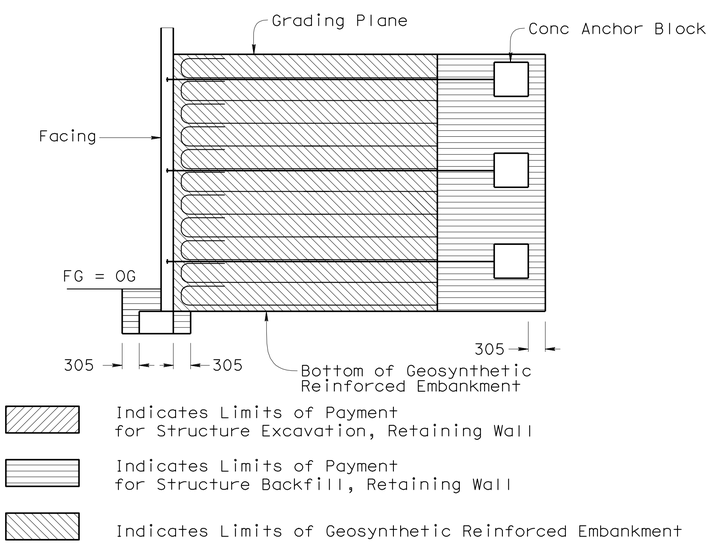

STRUCTURE BACKFILL

NO SCALE

NOTE:

1. Geocomposite drain strip per Section 88 Geosynthetics of the Standard Specifications.

1 REVISED PER ADDENDUM NO. 1 DATED APRIL 21, 2011

Caltrans Metric

	BY	CHECKED
DESIGN	M.Okimura	D.Texler
DETAILS	Pauline Tong	D.Texler
QUANTITIES	M.Okimura	D.Tavatli

STATE OF CALIFORNIA
DEPARTMENT OF TRANSPORTATION

DIVISION OF ENGINEERING SERVICES
STRUCTURE DESIGN
DESIGN BRANCH 11

BRIDGE NO. RW13
KILOMETER POST 3.88

RETAINING WALL 13
RETAINING WALL DETAILS NO 2

ALL DIMENSIONS ARE IN MILLIMETERS UNLESS OTHERWISE SHOWN

ORIGINAL SCALE IN MILLIMETERS FOR REDUCED PLANS 0 10 20 30 40 50 60 70 80 90 100

CU 07225
EA 2159C1

DISREGARD PRINTS BEARING EARLIER REVISION DATES

REVISION DATES: 12-4-08, 2-23-11, 3/15/11, 5-26-09, 6-30-09, 7-02-09, 1-7-10, 2-7-11

SHEET 4 OF 4

FILE => 53-rw13-d-rwdet.add

STRUCTURES DESIGN DETAIL SHEET (METRIC) (REV.03-17-04)

USERNAME => trmikest DATE PLOTTED => 20-APR-2011 TIME PLOTTED => 13:50