Dist	COUNTY	ROUTE	KILOMETER POST TOTAL PROJECT	SHEET No.	TOTAL SHEETS
07	LA	405	39.7/41.5	6	439

Ngim N. Pe 10-12-09
REGISTERED CIVIL ENGINEER DATE

6-7-10
PLANS APPROVAL DATE

REGISTERED PROFESSIONAL ENGINEER NGIM NANCY PE No. 58161 Exp. 6-30-10 CIVIL STATE OF CALIFORNIA

THE STATE OF CALIFORNIA OR ITS OFFICERS OR AGENTS SHALL NOT BE RESPONSIBLE FOR THE ACCURACY OR COMPLETENESS OF ELECTRONIC COPIES OF THIS PLAN SHEET.

Caltrans Metric

NOTES:

1. FOR COMPLETE RIGHT OF WAY AND ACCURATE ACCESS DATA, SEE RIGHT OF WAY RECORD MAPS AT DISTRICT OFFICE.
2. TREES WITHIN TCE AREA SHALL BE PROTECTED IN PLACE.

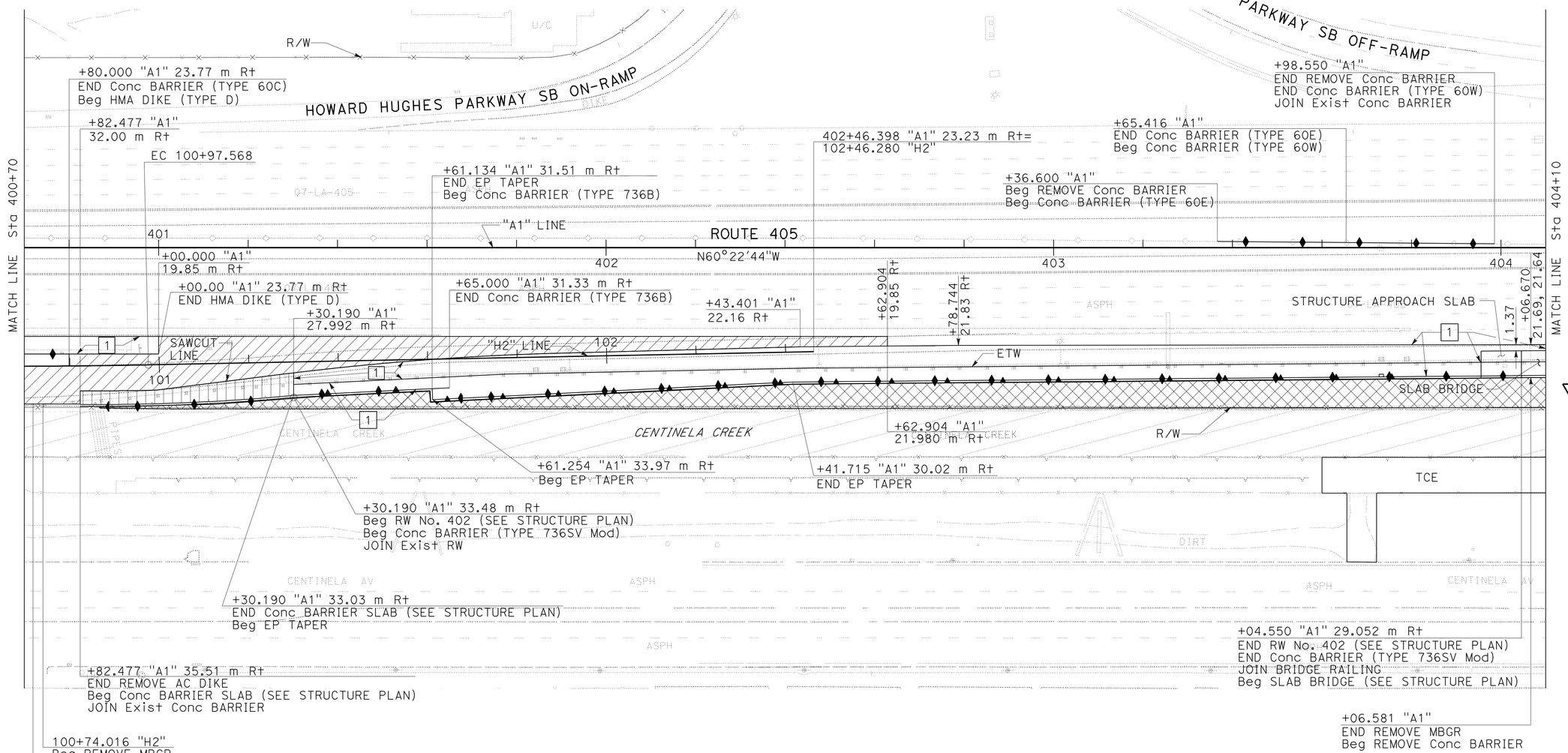

ALL DIMENSIONS ARE IN METERS UNLESS OTHERWISE SHOWN.

LAYOUT

SCALE 1:500

1 REVISED PER ADDENDUM No. 1 DATED APRIL 7, 2011

L-2

STATE OF CALIFORNIA - DEPARTMENT OF TRANSPORTATION
Caltrans **OFFICE OF DESIGN A**

FUNCTIONAL SUPERVISOR: NGIM NANCY PE
CALCULATED-DESIGNED BY: ANDREW LY
CHECKED BY: NGIM NANCY PE
REVISED BY / DATE REVISED

LAST REVISION 00-00-00 DATE PLOTTED => 06-APR-2011 TIME PLOTTED => 11:17

BORDER LAST REVISED 3/1/2007 | RELATIVE BORDER SCALE IS IN MILLIMETERS 0 20 40 60 80 | USERNAME => trmikesl DGN FILE => 724130ea02.dgn | CU 07225 | EA 241301

Dist	COUNTY	ROUTE	KILOMETER POST TOTAL PROJECT	SHEET No.	TOTAL SHEETS
07	LA	405	39.7/41.5	7	439

Ngim N. Pe 10-12-09
REGISTERED CIVIL ENGINEER DATE

6-7-10
PLANS APPROVAL DATE

REGISTERED PROFESSIONAL ENGINEER NGIM NANCY PE No. 58161 Exp. 6-30-10 CIVIL STATE OF CALIFORNIA

THE STATE OF CALIFORNIA OR ITS OFFICERS OR AGENTS SHALL NOT BE RESPONSIBLE FOR THE ACCURACY OR COMPLETENESS OF ELECTRONIC COPIES OF THIS PLAN SHEET.

Caltrans Metric

NOTES:

1. FOR COMPLETE RIGHT OF WAY AND ACCURATE ACCESS DATA, SEE RIGHT OF WAY RECORD MAPS AT DISTRIC OFFICE.
2. TREES WITHIN TCE AREA SHALL BE PROTECTED IN PLACE.

CURVE DATA

No.	R	Δ	T	L
3	609.603	27°14'37"	147.724	289.861

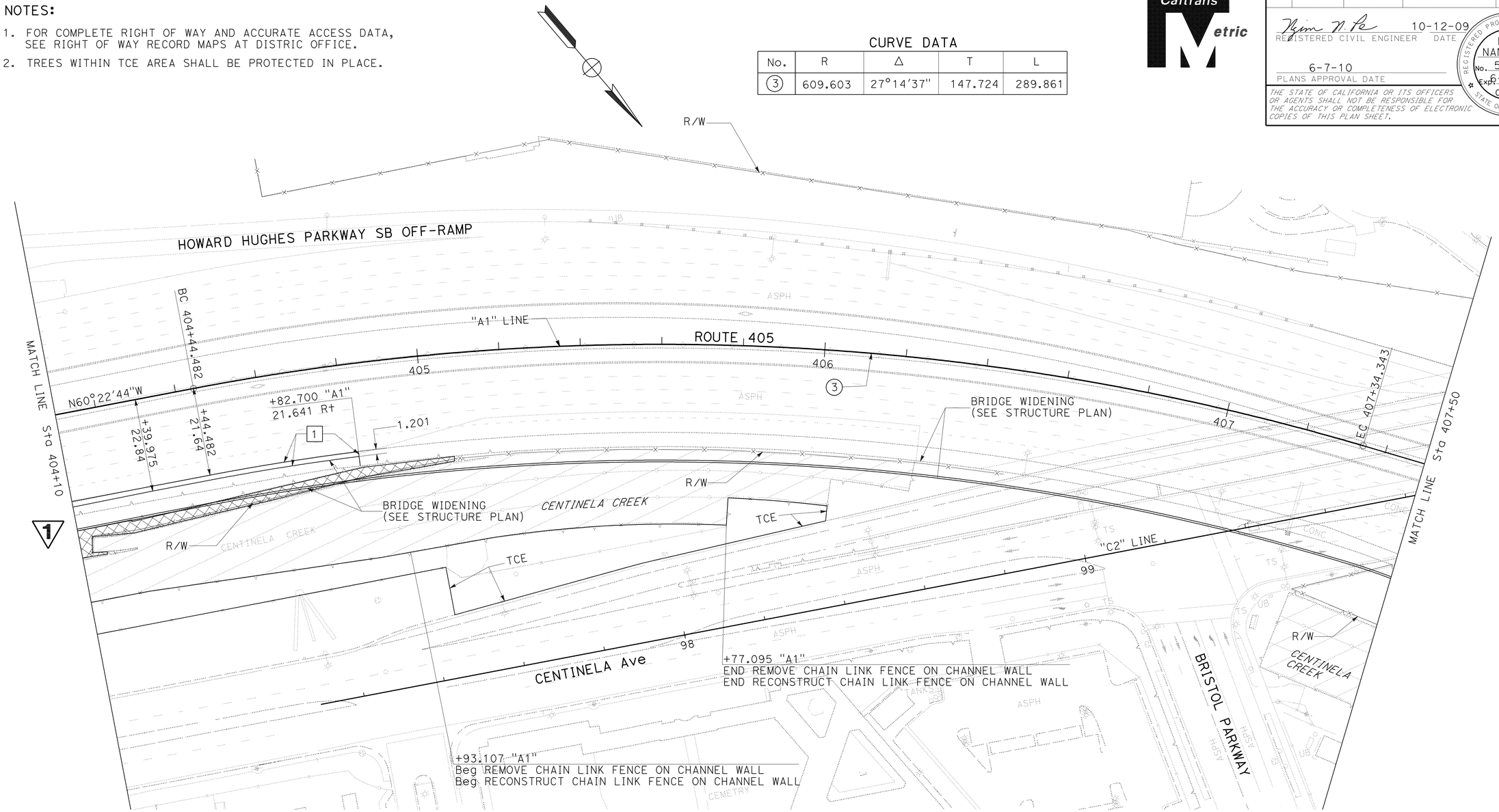

ALL DIMENSIONS ARE IN METERS UNLESS OTHERWISE SHOWN.

LAYOUT

SCALE 1:500

L-3

1 **REVISED PER ADDENDUM No. 1 DATED APRIL 7, 2011**

STATE OF CALIFORNIA - DEPARTMENT OF TRANSPORTATION
Caltrans **OFFICE OF DESIGN A**

FUNCTIONAL SUPERVISOR: NGIM NANCY PE
CALCULATED-DESIGNED BY: ANDREW LY
CHECKED BY: NGIM NANCY PE
REVISED BY / DATE REVISED

LAST REVISION 00-00-00 | DATE PLOTTED => 06-APR-2011 | TIME PLOTTED => 11:17

Dist	COUNTY	ROUTE	KILOMETER POST TOTAL PROJECT	SHEET No.	TOTAL SHEETS
07	LA	405	39.7/41.5	8	439

Ngim N. Pe 10-12-09
REGISTERED CIVIL ENGINEER DATE

6-7-10
PLANS APPROVAL DATE

REGISTERED PROFESSIONAL ENGINEER NGIM NANCY PE No. 58161 Exp. 6-30-10 CIVIL STATE OF CALIFORNIA

THE STATE OF CALIFORNIA OR ITS OFFICERS OR AGENTS SHALL NOT BE RESPONSIBLE FOR THE ACCURACY OR COMPLETENESS OF ELECTRONIC COPIES OF THIS PLAN SHEET.

Caltrans Metric

NOTE:

FOR COMPLETE RIGHT OF WAY AND ACCURATE ACCESS DATA, SEE RIGHT OF WAY RECORD MAPS AT DISTRICT OFFICE.

CURVE DATA

No.	R	Δ	T	L
4	1370.013	02°23'46"	28.651	57.293
5	80.000	27°27'20"	19.555	38.358
6	457.200	03°16'20"	13.059	26.111
7	152.400	26°09'22"	35.403	69.572
8	152.400	52°38'47"	75.398	140.033

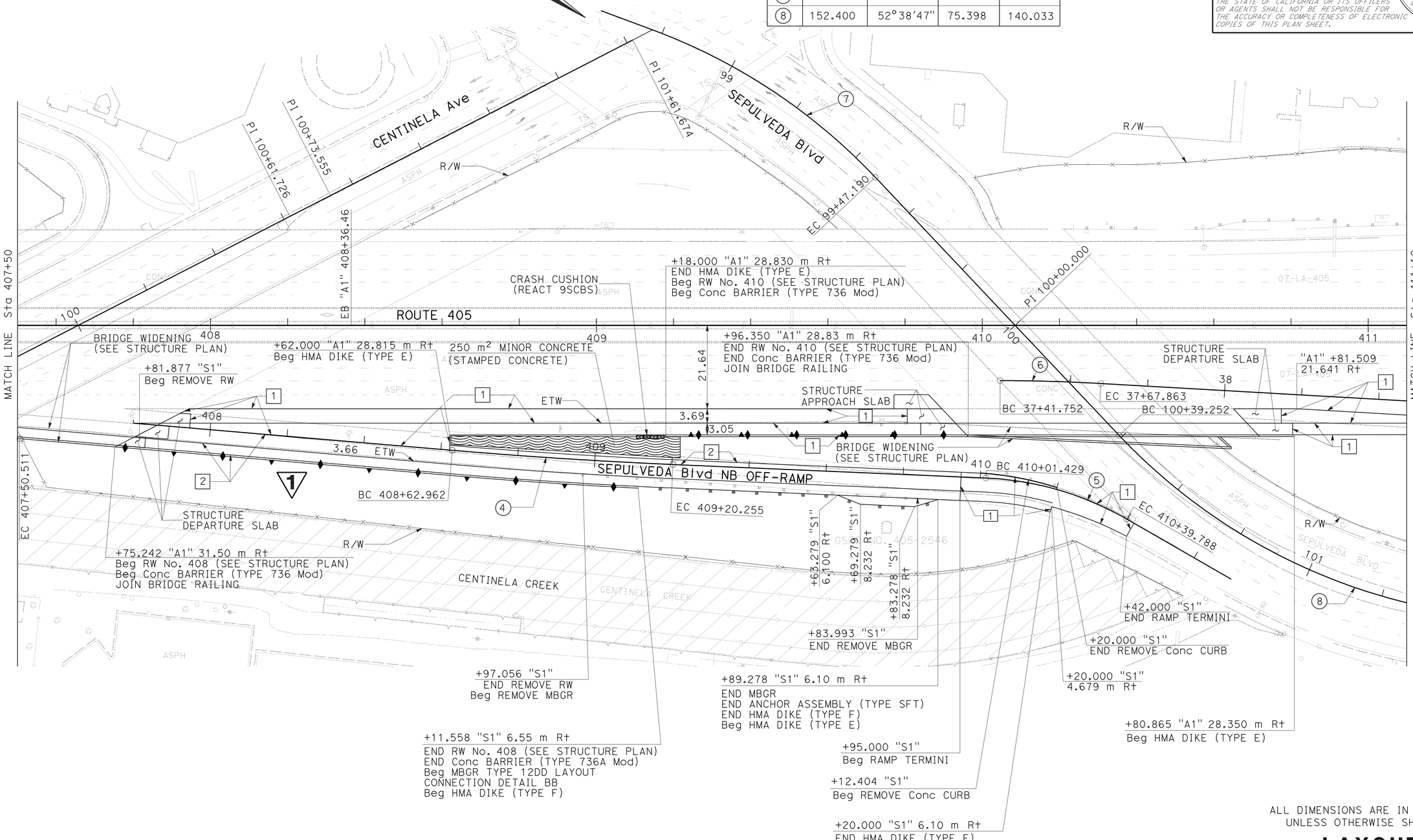

ALL DIMENSIONS ARE IN METERS UNLESS OTHERWISE SHOWN.

LAYOUT

SCALE 1:500

1 REVISED PER ADDENDUM No. 1 DATED APRIL 7, 2011

L-4

STATE OF CALIFORNIA - DEPARTMENT OF TRANSPORTATION
Caltrans OFFICE OF DESIGN A

FUNCTIONAL SUPERVISOR: NGIM NANCY PE
CALCULATED-DESIGNED BY: ANDREW LY
CHECKED BY: NGIM NANCY PE
REVISED BY / DATE REVISED

LAST REVISION 00-00-00 | DATE PLOTTED => 06-APR-2011 | TIME PLOTTED => 11:17

Dist	COUNTY	ROUTE	KILOMETER POST TOTAL PROJECT	SHEET No.	TOTAL SHEETS
07	LA	405	39.7/41.5	33	439

Ngim N. Pe 10-12-09
REGISTERED CIVIL ENGINEER DATE

6-7-10
PLANS APPROVAL DATE

REGISTERED PROFESSIONAL ENGINEER NGIM NANCY PE No. 58161 Exp. 6-30-08 CIVIL STATE OF CALIFORNIA

THE STATE OF CALIFORNIA OR ITS OFFICERS OR AGENTS SHALL NOT BE RESPONSIBLE FOR THE ACCURACY OR COMPLETENESS OF ELECTRONIC COPIES OF THIS PLAN SHEET.

Caltrans Metric

1

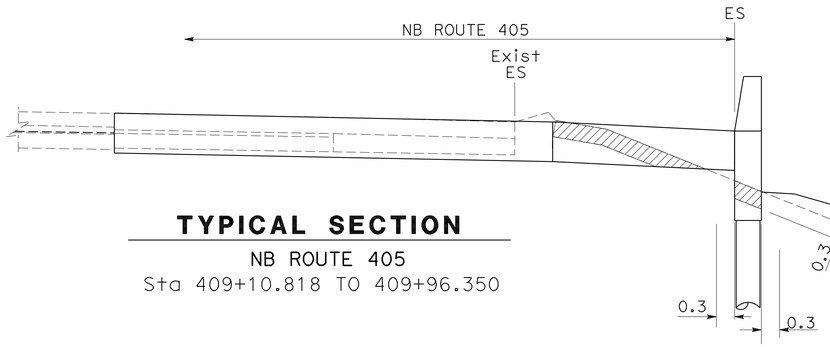

TYPICAL SECTION
NB ROUTE 405
Sta 409+10.818 TO 409+96.350

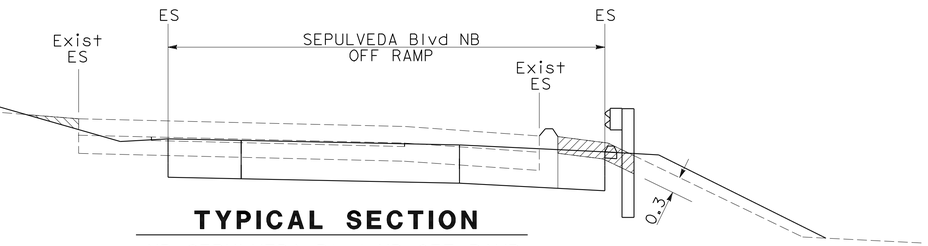

TYPICAL SECTION
NB SEPULVEDA Blvd NB OFF RAMP
Sta 409+11.558 TO 409+84.000

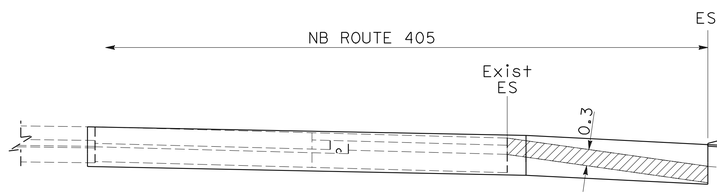

TYPICAL SECTION
NB ROUTE 405
Sta 408+62.000 TO 409+10.818

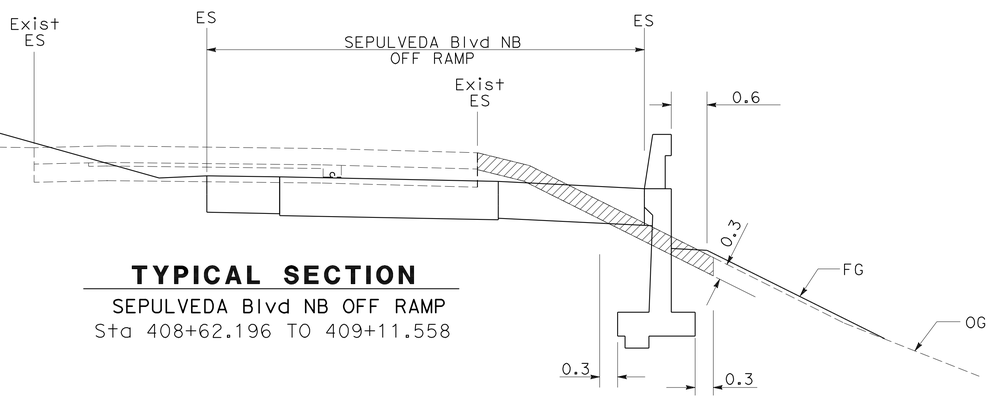

TYPICAL SECTION
SEPULVEDA Blvd NB OFF RAMP
Sta 408+62.196 TO 409+11.558

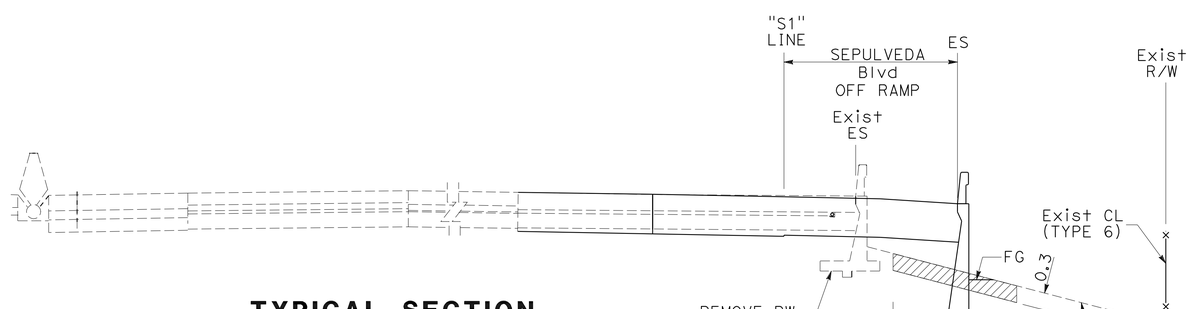

TYPICAL SECTION
NB ROUTE 405
Sta 407+75.240 TO 408+62.000

ALL DIMENSIONS ARE IN METERS UNLESS OTHERWISE SHOWN.

CONSTRUCTION DETAILS
NO SCALE

C-23

1 **REVISED PER ADDENDUM No. 1 DATED APRIL 7, 2011**

STATE OF CALIFORNIA - DEPARTMENT OF TRANSPORTATION
Caltrans **OFFICE OF DESIGN A**

FUNCTIONAL SUPERVISOR: NGIM NANCY PE
CALCULATED-DESIGNED BY: ANDREW LY
CHECKED BY: NGIM NANCY PE
REVISED BY / DATE REVISED

LAST REVISION 00-00-00 | DATE PLOTTED => 06-APR-2011 | TIME PLOTTED => 11:18

DIST	COUNTY	ROUTE	KILOMETER POST TOTAL PROJECT	SHEET No	TOTAL SHEETS
07	LA	405	39.65/41.47	38A	439

REGISTERED CIVIL ENGINEER 3-23-11 DATE

6-7-10
PLANS APPROVAL DATE

REGISTERED PROFESSIONAL ENGINEER SUONG T. VU No. C055212 Exp. 6/30/12 CIVIL STATE OF CALIFORNIA

The State of California or its officers or agents shall not be responsible for the accuracy or completeness of electronic copies of this plan sheet.

Caltrans Metric

1

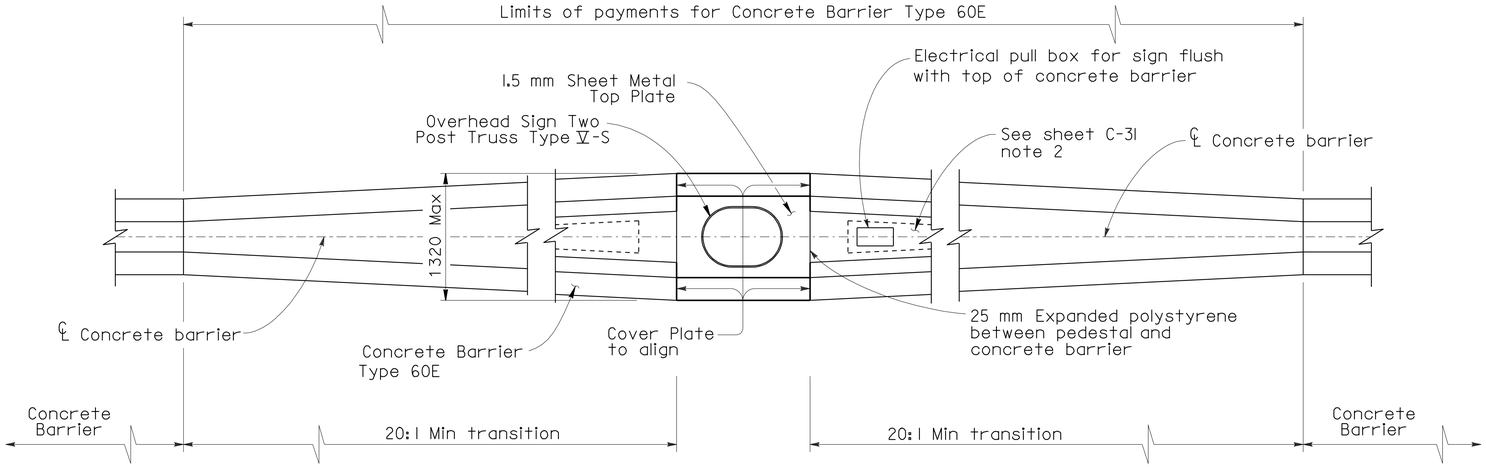

TRANSITION AT SIGN PEDESTAL

CONCRETE BARRIER TYPE 60E

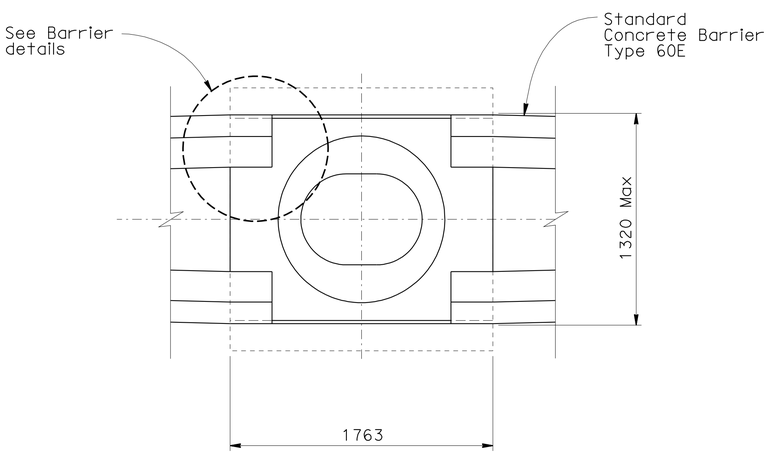

PEDESTAL LAYOUT

Cover plate not shown for clarity

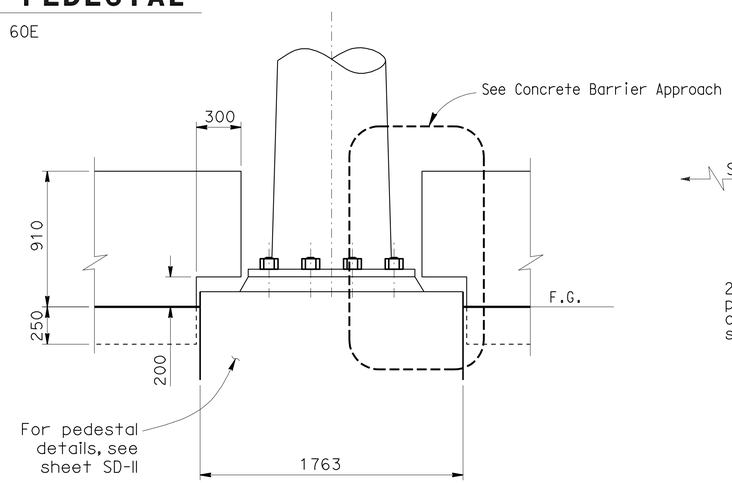

BARRIER CONNECTION TO PEDESTAL

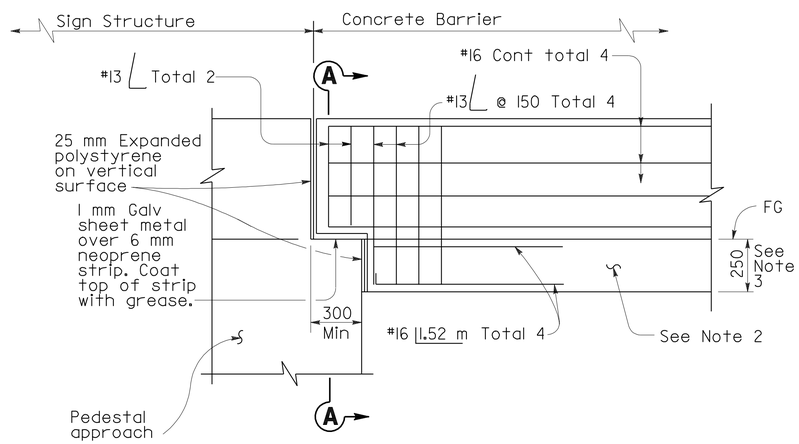

CONCRETE BARRIER APPROACH

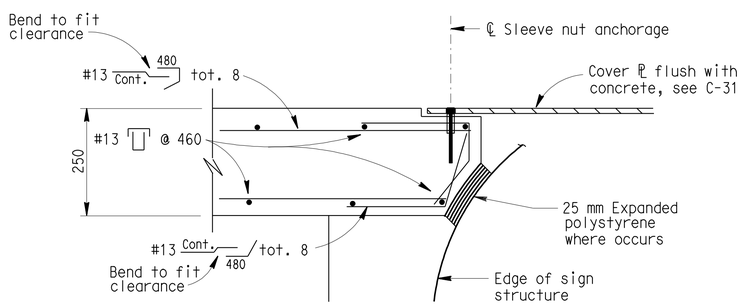

BARRIER DETAILS

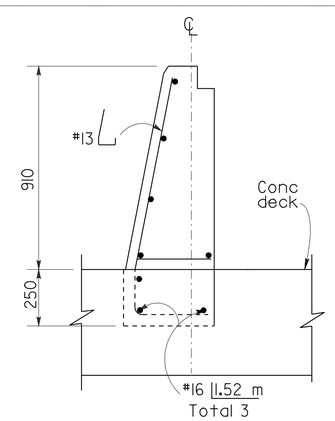

SECTION A-A

NOTES:

1. For details not shown, see "2004 STANDARD PLANS" and "2004 REVISED STANDARD PLANS".
2. The footing is required at concrete barrier ends and at interruptions in concrete barrier.
3. 250 mm concrete footing extends 3.0 m back from structure.

TRANSITION DETAILS AT STA 412+00

NO SCALE

C-29

1 ADDED PER ADDENDUM No. 1 DATED APRIL 7, 2011

STATE OF CALIFORNIA - DEPARTMENT OF TRANSPORTATION
Caltrans
SPECIAL DESIGNS BRANCH

PROJECT ENGINEER T MARCHENKO
CALCULATED/DESIGNED BY T MARCHENKO
CHECKED BY S VU
DATE
DETAILS QUANTITIES
D W JUSTICE Jr

LAST REVISION 3-23-11
DATE PLOTTED => 06-APR-2011TIME PLOTTED => 11:18

ORIGINAL SCALE IN MILLIMETERS FOR REDUCED PLANS 0 10 20 30 40 50 60 70 80 90 100

USERNAME => trmikesl
DGN FILE =>/spes_des_br_proj/2008sd/07-241301 07-241301_c29.add

CU 07 EA 241301

DIST	COUNTY	ROUTE	KILOMETER POST TOTAL PROJECT	SHEET No	TOTAL SHEETS
07	LA	405	39.65/41.47	38B	439

REGISTERED CIVIL ENGINEER 3-23-11 DATE

6-7-10
PLANS APPROVAL DATE

REGISTERED PROFESSIONAL ENGINEER SUONG T. VU No. C055212 Exp. 6/30/12 CIVIL STATE OF CALIFORNIA

The State of California or its officers or agents shall not be responsible for the accuracy or completeness of electronic copies of this plan sheet.

Caltrans Metric

1

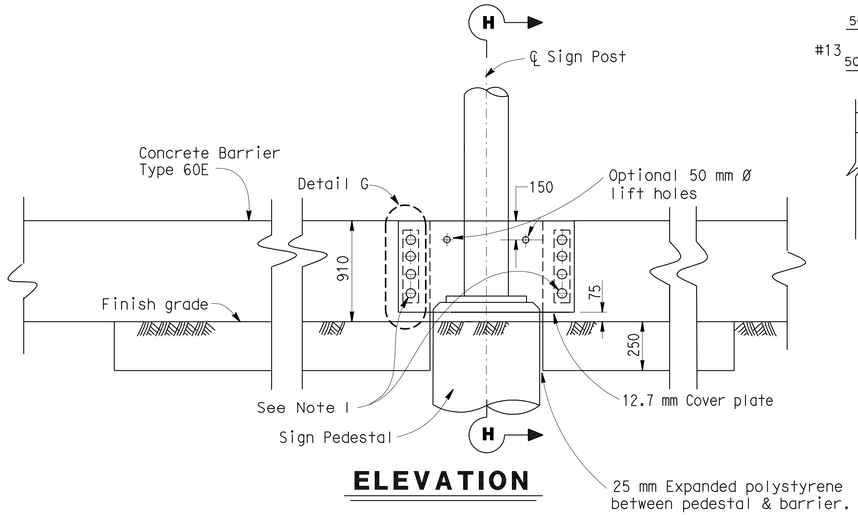

ELEVATION

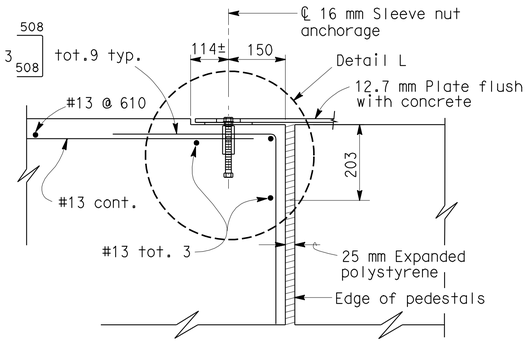

DETAIL K

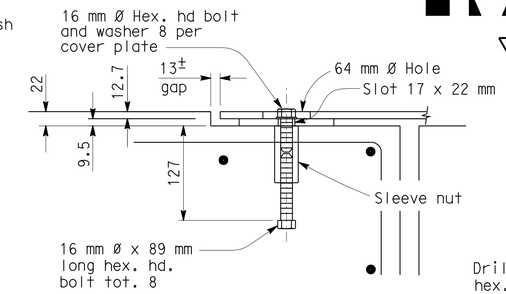

DETAIL L

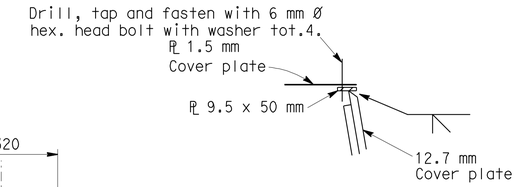

DETAIL F

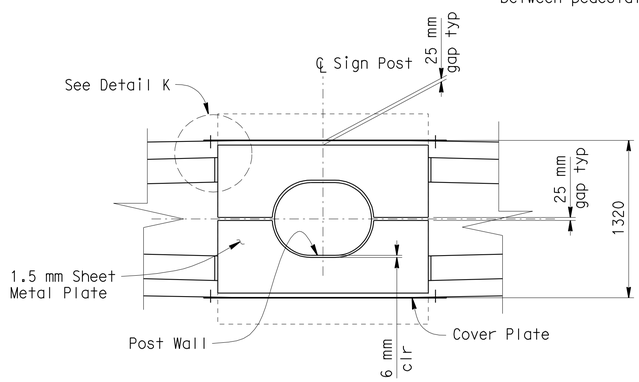

PLAN

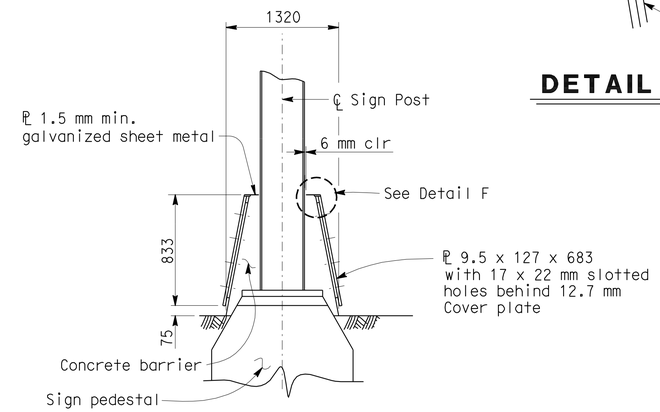

SECTION H-H

Note: Concrete Barrier Type 60E is symmetrical about ℄ of sign post.

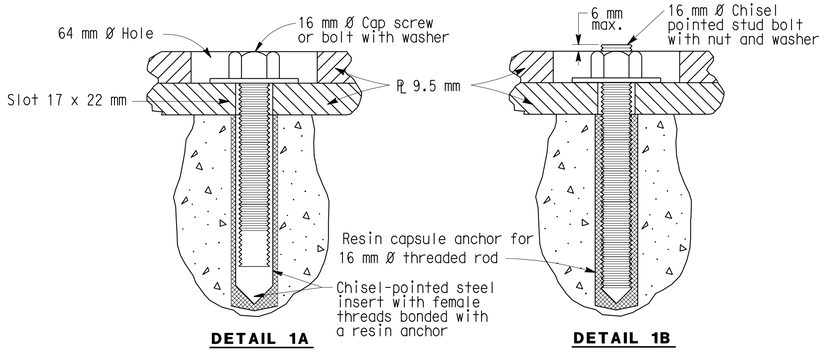

ALTERNATIVE ANCHORAGE

NOTES: A) Resin capsule anchorage is subject to approval of the Engineer. Installation procedures shall comply with manufacturer's instructions.

B) Detail B similar to Detail A except for anchorage devices.

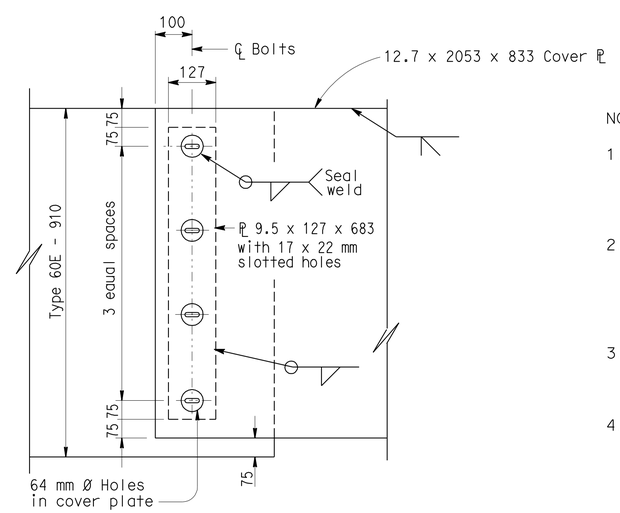

DETAIL G

NOTES:

1. 16 mm Ø Sleeve nut anchorage or Resin capsule anchorage (See Alternative Anchorage). A total of 8 anchorage units required per plate. All metal plates to be galvanized after fabrication. Hardware to be galvanized or non-corrosive.
2. Contractor options for fill between concrete barrier walls:
   A. Place 100 mm PCC at base between concrete barrier walls.
   B. Place 305 mm of granular material at base between walls.
   C. Place granular material from base to bottom of 100 mm cap.
   D. Monolithic concrete with foam blockouts is not permitted.
3. Adjust height of concrete barrier wall on low side of offset or superelevated roadways to provide a level grade across the top of concrete barrier cap.
4. Refer to Standard sheets A76B for connections to structure and A76C for barrier Type 60E.

1 ADDED PER ADDENDUM No. 1 DATED APRIL 7, 2011

COVER PLATE DETAILS AT STA 412+00

NO SCALE

C-30

STATE OF CALIFORNIA - DEPARTMENT OF TRANSPORTATION
Caltrans
SPECIAL DESIGNS BRANCH

PROJECT ENGINEER T MARCHENKO
CALCULATED/DESIGNED BY T MARCHENKO
CHECKED BY S VU
DETAILS D W JUSTICE Jr
QUANTITIES
DATE

LAST REVISION 3-23-11
DATE PLOTTED => 06-APR-2011TIME PLOTTED => 11:18

ORIGINAL SCALE IN MILLIMETERS FOR REDUCED PLANS 0 10 20 30 40 50 60 70 80 90 100

USERNAME => trmikesl
DGN FILE =>spes_des_br_proj/2008sd/07-241301/ 07-241301_c30.add

CU 07 EA 241301

Post Type	Anchor Bolts				Square Pedestal						CIDH Pile (See note 6)						
	Total	Dia (mm)	BC (mm)	Total Length (mm)	Pedestal Square one side	Reinforcing			Hoop		Pile Dia (mm)	Pile Depth (m)	Reinforcing			Spiral	
						Total	Bar Size	Spacing ea face	Bar Size	Pitch			Total	Bar Size	BC (mm)	Bar Size	Pitch
V-S	16	64	965	1524	1763	16	36	381	16	89	1524	8	28	36	1295	16	89

See bending table

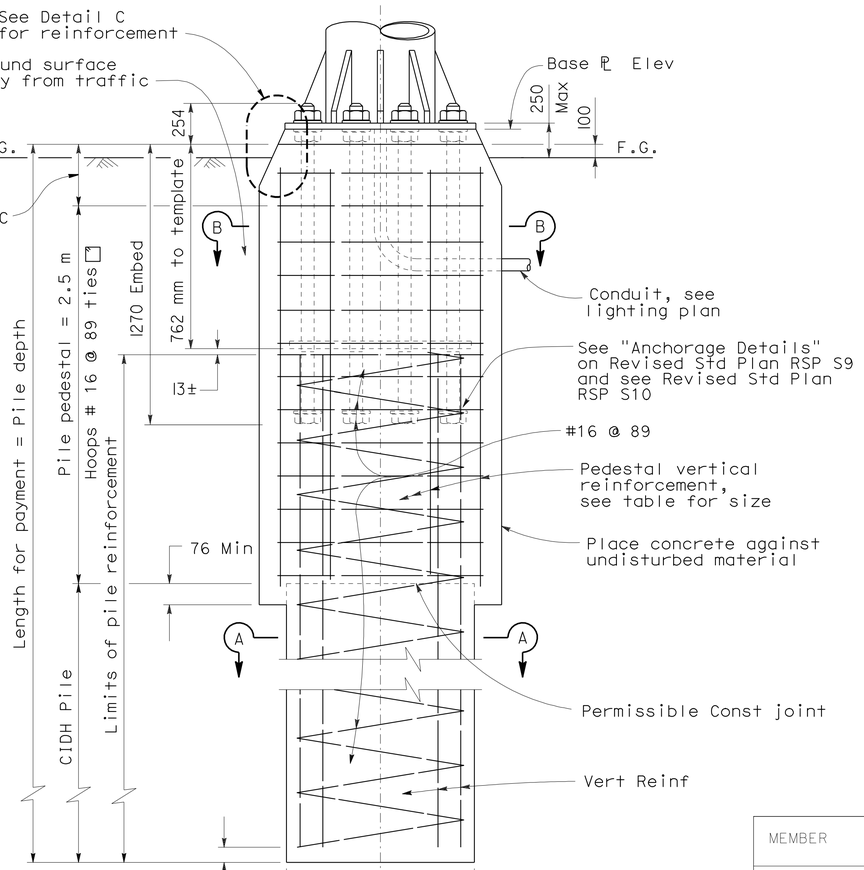

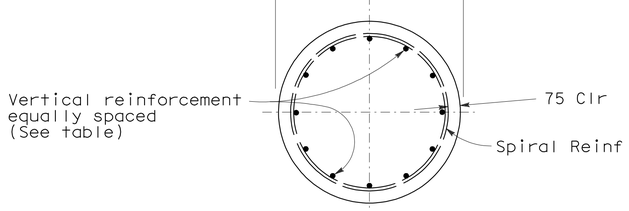

SECTION A-A

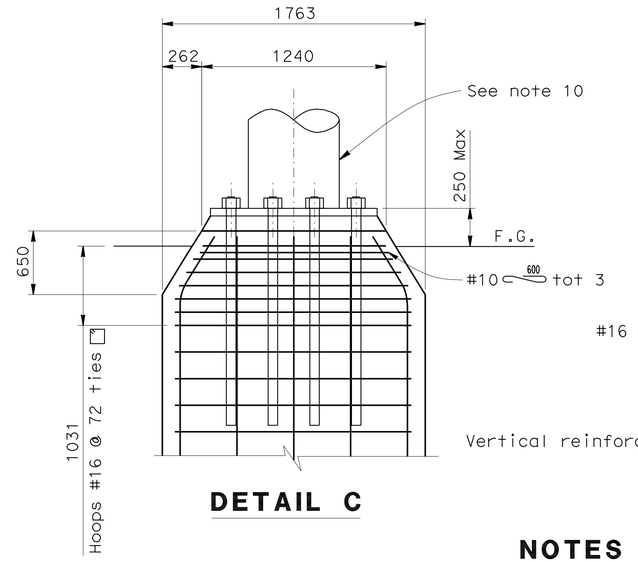

DETAIL C

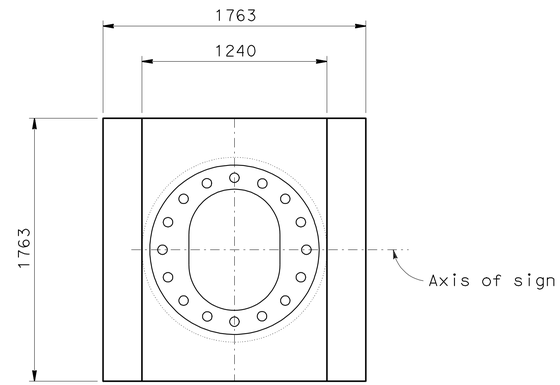

TAPER PEDESTAL

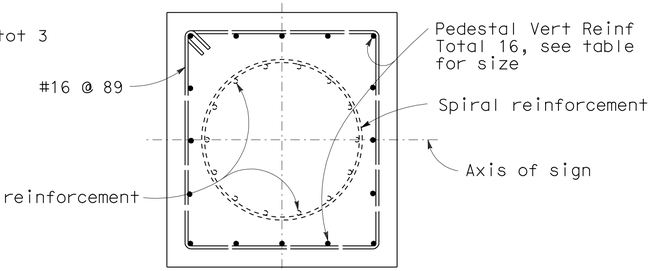

SECTION B-B

NOTES

1. For anchor bolt layout, see post sheet RSP-S10.
2. For "Base ℄ and elevation" see Project Plans SD-3 and Standard Plans RSP-S10.
3. Longer side of post shall be normal to axis of sign.
4. Prior to erection of the post, backfill, which is equivalent to the surrounding material, shall be in place.
5. Pedestal shall be formed 150 mm Min below ground surface. Remainder to be placed against undisturbed material.
6. Foundation design is based on 2001 AASHTO article 13.6 Broms' approximate procedure assuming a cohesionless material. The angle of internal friction used is 30° and unit weight of soil used is 1922 kg/m³.
7. Align finish grade with taper pedestal to keep 1320 mm (max) above finish grade.
8. Gap between narrowed pedestal and cover plate to be 75mm see Elevation Sheet C-31.
9. For cover plate details, refer to sheets C-30.
10. For transition details see Sheet C-29.

REBAR BENDING TABLE

MEMBER	MARK	SHAPE/ REMARKS		BAR SIZE	BARS REQD	NOTES*
Vertical	①	PLAN 245 245	ELEV. 610 346	36	4	2375 701
	②	PLAN — 230	ELEV. 610 245	36	4	2375 657
	③	PLAN 60 245	ELEV. 610 252	36	2	2375 660

Note: Hoops are different on taper part

*with 7% elongation

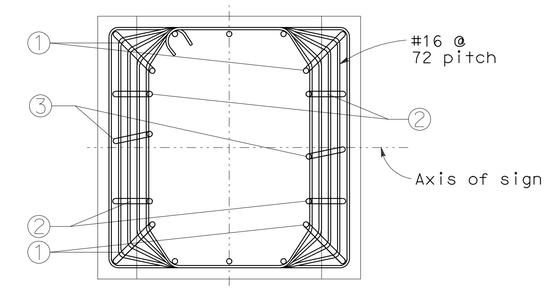

DETAIL D

1 ADDED PER ADDENDUM No. 1 DATED APRIL 7, 2011

OH SIGN AT STA 412+00 PEDESTAL (MOD) PEDESTAL DETAILS

NO SCALE

SD-10

DIST	COUNTY	ROUTE	KILOMETER POST TOTAL PROJECT	SHEET No	TOTAL SHEETS
07	LA	405	39.65/41.47	133A	439

REGISTERED CIVIL ENGINEER 3-23-11 DATE

6-7-10 PLANS APPROVAL DATE

REGISTERED PROFESSIONAL ENGINEER SUONG T. VU No. C055212 Exp. 6/30/12 CIVIL STATE OF CALIFORNIA

The State of California or its officers or agents shall not be responsible for the accuracy or completeness of electronic copies of this plan sheet.

Caltrans Metric

STATE OF CALIFORNIA - DEPARTMENT OF TRANSPORTATION
Caltrans SPECIAL DESIGNS BRANCH
PROJECT ENGINEER TAMARA MARCHENKO
CALCULATED/DESIGNED BY T MARCHENKO CHECKED BY S VU
DATE
DETAILS D W JUSTICE Jr QUANTITIES

LAST REVISION 3-23-11
DATE PLOTTED => 06-APR-2011 TIME PLOTTED => 11:18

ORIGINAL SCALE IN MILLIMETERS FOR REDUCED PLANS 0 10 20 30 40 50 60 70 80 90 100

USERNAME => trmikesl
DGN FILE =>spec_des_br_prj/2008sd/07-241301/ 07-241301_sd10.add

CU 07 EA 241301

DIST	COUNTY	ROUTE	KILOMETER POST TOTAL PROJECT	SHEET No	TOTAL SHEETS
07	LA	405	39.7/41.5	243	439

REGISTERED CIVIL ENGINEER 5-11-09 DATE

6-7-10
PLANS APPROVAL DATE

REGISTERED PROFESSIONAL ENGINEER LEON VALLA No. 45351 Exp. 09-30-10 CIVIL STATE OF CALIFORNIA

The State of California or its officers or agents shall not be responsible for the accuracy or completeness of electronic copies of this plan sheet.

GENERAL NOTES
LOAD FACTOR DESIGN

DESIGN: BRIDGE DESIGN SPECIFICATIONS (1996 AASHTO with Interims and Revisions by Caltrans)

SEISMIC DESIGN: Caltrans Seismic Design Criteria (SDC) Version 1.4 June 2006

DEAD LOAD: Includes 1.700 kPa for future wearing surface.

LIVE LOADING: HS20-44 and alternative and permit design load.

RAIL LOAD: 240 Kn traffic collision load (LFD loading) applied laterally at the top of barrier and distributed over a longitudinal distance of 3.048 meters.

SEISMIC LOADING: See "Site Specific ARS Curve".

REINFORCED CONCRETE:
f_y = 420 Mpa
f_c = 25 MPa @ 28 days (UON)

Transverse Deck Slabs (Working Stress Design)
f_s = 138 MPa
f_c = 8.3 MPa
n = 10

PRESTRESSED CONCRETE: See "Prestressing Notes" on "Miscellaneous Details No. 3" sheet.

STEEL BARS AND PLATE: A36/A36m
f_y min = 250 MPa

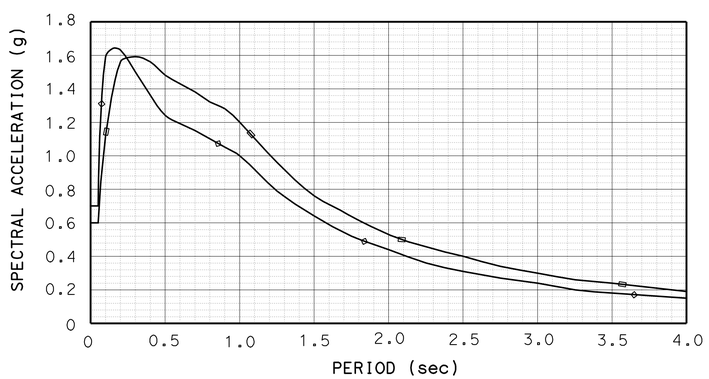

Modified ARS based on CNK and soil profile Type D, MCE = 6.500, PBA = 0.700g

Modified ARS based on NIE and soil profile Type D, MCE = 7.000, PBA = 0.600g

SITE SPECIFIC ARS CURVE
NO SCALE

QUANTITIES

TEMPORARY SUPPORT	LUMP	SUM
TEMPORARY DECKING	LUMP	SUM
BRIDGE REMOVAL (PORTION), LOCATION A	LUMP	SUM
STRUCTURE EXCAVATION (BRIDGE)	635	m^3
STRUCTURE EXCAVATION (TYPE D)	57	m^3
STRUCTURE EXCAVATION (TYPE Z-2) (AERIALLY DEPOSITED LEAD)	302	m^3
STRUCTURE BACKFILL (BRIDGE)	339	m^3
LEAN CONCRETE BACKFILL	95	m^3
600 MM CAST-IN-DRILLED-HOLE CONCRETE PILING	1 950	m
750 MM CAST-IN-DRILLED-HOLE CONCRETE PILING	43	m
1.5 m CAST-IN-DRILLED-HOLE CONCRETE PILING	18	m
1.2 m CAST-IN-DRILLED-HOLE CONCRETE PILING	65	m
2.1 m CAST-IN-DRILLED-HOLE CONCRETE PILING	40	m
PRESTRESSING CAST-IN-PLACE CONCRETE	LUMP	SUM
STRUCTURAL CONCRETE, BRIDGE FOOTING	253 ~~75~~	m^3
STRUCTURAL CONCRETE, BRIDGE	1 761 ~~1 939~~	m^3
STRUCTURAL CONCRETE, APPROACH SLAB (TYPE EQ)	4	m^3
STRUCTURAL CONCRETE, APPROACH SLAB (TYPE N)	15	m^3
OUTRIGGER BOLSTER	2	EA
ARCHITECTURAL TREATMENT	42	m^2
DRILL AND BOND DOWEL	48	m
PRESSSURE GROUT BENT DOWEL	72	m
DRILL AND BOND DOWEL (CHEMICAL ADHESIVE)	75	EA
CORE AND PRESSURE GROUT DOWELS	8	m
REFINISH BRIDGE DECK	39	m^2
JOINT SEAL (MR 25 MM)	36	m
JOINT SEAL (MR 40 MM)	6	m
JOINT SEAL (MR 50 MM)	24	m
BAR REINFORCING STEEL (BRIDGE)	497 298	kg
HEADED BAR REINFORCEMENT	1 252	EA
ISOLATION CASING	64 742	kg
MISCELLANEOUS METAL (RESTRAINER - CABLE TYPE)	4 020	kg
MISCELLANEOUS METAL (BRIDGE)	7 949	kg
BRIDGE DECK DRAINAGE SYSTEM	9 580	kg
CONCRETE BARRIER (TYPE 736 MODIFIED)	367	m

1

1 REVISED PER ADDENDUM No. 1 DATED APRIL 7, 2011

Caltrans Metric

	BY	CHECKED
DESIGN	C. Hensel/M. Kattaa	M F/W A
DETAILS	Various	L. Valla
QUANTITIES	F. Tannous	M. Kattaa

STATE OF CALIFORNIA
DEPARTMENT OF TRANSPORTATION

DIVISION OF ENGINEERING SERVICES
STRUCTURE DESIGN
DESIGN BRANCH 12

BRIDGE NO. 53-1253
KILOMETER POST 40.76

CENTINELA AVE UC (WIDEN)
GENERAL NOTES NO. 1

ALL DIMENSIONS ARE IN MILLIMETERS UNLESS OTHERWISE SHOWN

ORIGINAL SCALE IN MILLIMETERS FOR REDUCED PLANS 0 10 20 30 40 50 60 70 80 90 100

CU 07
EA 241301

DISREGARD PRINTS BEARING EARLIER REVISION DATES

REVISION DATES: 5-2-07 11-16-09 8-1-08 8-14-08 11-3-08 5-13-09 5-26-09 8-13-09 11-4-09

SHEET 6 OF 134

FILE => 53-1253-0b-gn01.add

STRUCTURES DESIGN DETAIL SHEET (METRIC) (REV.03-17-04)

USERNAME => trmikest DATE PLOTTED => 06-APR-2011 TIME PLOTTED => 11:18