Dist	COUNTY	ROUTE	POST MILES TOTAL PROJECT	SHEET No.	TOTAL SHEETS
07	LA	101	8.5/9.4	1	62

STATE OF CALIFORNIA

ACHSNHPG-Q101(279)E

DEPARTMENT OF TRANSPORTATION

PROJECT PLANS FOR CONSTRUCTION ON

STATE HIGHWAY

IN LOS ANGELES COUNTY IN LOS ANGELES

FROM 0.24 MILE SOUTH OF MULHOLLAND DRIVE OVERCROSSING TO 0.30 MILE NORTH OF BARHAM BOULEVARD OVERCROSSING

TO BE SUPPLEMENTED BY STANDARD PLANS DATED 2010

INDEX OF PLANS

SHEET No.	DESCRIPTION
1	TITLE SHEET
2	TYPICAL CROSS SECTION
3-5	LAYOUTS
6-10	CONSTRUCTION DETAILS
11-13	UTILITY PLANS
14	CONSTRUCTION AREA SIGNS
15	TRAFFIC HANDLING PLANS
16-20	TRAFFIC HANDLING DETAILS
21-22	SIGN PLAN AND DETAILS
23	SUMMARY OF QUANTITIES
24-38	ELECTRICAL PLANS
39-58	REVISED STANDARD PLANS

STRUCTURE PLANS

59-62	BARHAM Blvd OVERCROSSING Br No. 53-0466

THE STANDARD PLANS LIST APPLICABLE TO THIS CONTRACT IS INCLUDED IN THE NOTICE TO BIDDERS AND SPECIAL PROVISIONS BOOK.

LOCATION MAP

BEGIN CONSTRUCTION
Sta 451+41 PM 8.5

END CONSTRUCTION
Sta 496+00 PM 9.4

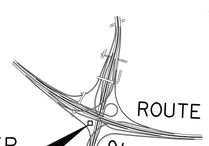

LOS ANGELES
REGIONAL TRAFFIC
MANAGEMENT CENTER
2901 WEST BROADWAY
LOS ANGELES, CA 90041

HUB AND TMC BUILDING LOCATIONS

ROUTE	POST MILE	DESCRIPTION OF LOCATION
2/134	18.7	LARTMC - LOS ANGELES REGIONAL TRAFFIC MANAGEMENT CENTER

THE CONTRACTOR SHALL POSSESS THE CLASS (OR CLASSES) OF LICENSE AS SPECIFIED IN THE "NOTICE TO BIDDERS."

NO SCALE

PROJECT ENGINEER
REGISTERED CIVIL ENGINEER

2/25/15
DATE

June 29, 2015
PLANS APPROVAL DATE

REGISTERED PROFESSIONAL ENGINEER
ESTHER KIM
No. C48363
Exp. 06/30/2016
CIVIL
STATE OF CALIFORNIA

THE STATE OF CALIFORNIA OR ITS OFFICERS OR AGENTS SHALL NOT BE RESPONSIBLE FOR THE ACCURACY OR COMPLETENESS OF SCANNED COPIES OF THIS PLAN SHEET.

CONTRACT No.	**07-287604**
PROJECT ID	**0700020928**

PROJECT MANAGER JAVAD RAHIMZADEH

DESIGN MANAGER MOHAMMED CHOWDHURY

LAST REVISION 00-00-00

DATE PLOTTED => 24-SEP-2015
TIME PLOTTED => 14:38

Dist	COUNTY	ROUTE	POST MILES TOTAL PROJECT	SHEET No.	TOTAL SHEETS
07	LA	101	8.5/9.4	2	62

REGISTERED CIVIL ENGINEER 2/25/15 DATE

6-29-15
PLANS APPROVAL DATE

REGISTERED PROFESSIONAL ENGINEER ESTHER M. KIM No. C48363 Exp. 6/30/16 CIVIL STATE OF CALIFORNIA

THE STATE OF CALIFORNIA OR ITS OFFICERS OR AGENTS SHALL NOT BE RESPONSIBLE FOR THE ACCURACY OR COMPLETENESS OF SCANNED COPIES OF THIS PLAN SHEET.

NOTES:

1. DIMENSIONS OF THE PAVEMENT STRUCTURES (STRUCTURAL SECTIONS) ARE SUBJECT TO TOLERANCES SPECIFIED IN THE STANDARD SPECIFICATIONS.
2. EXACT LOCATIONS AND TYPE OF CONCRETE BARRIER ARE SHOWN ON THE LAYOUTS AND THE SUMMARY OF QUANTITIES SHEET.

DESIGN DESIGNATION

ADT (2012)	268,000	D	51%
ADT (2035)	273,360	T	4%
DHV	15,400	V	70 mph
ESAL	59,358,660	TI_{20}	14

PAVEMENT CLIMATE REGION: SOUTH COAST

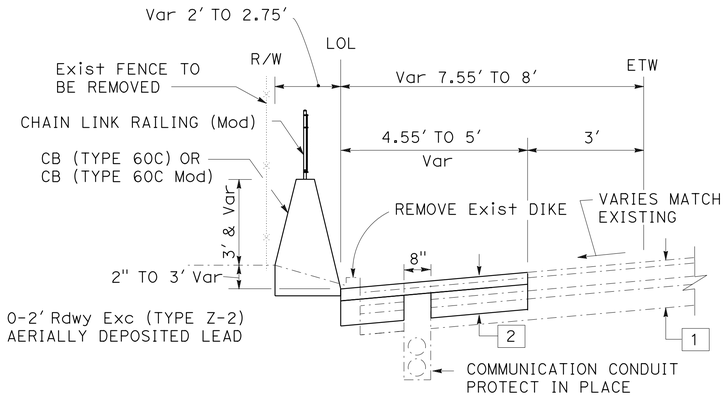

Sta 470+50 TO Sta 471+00

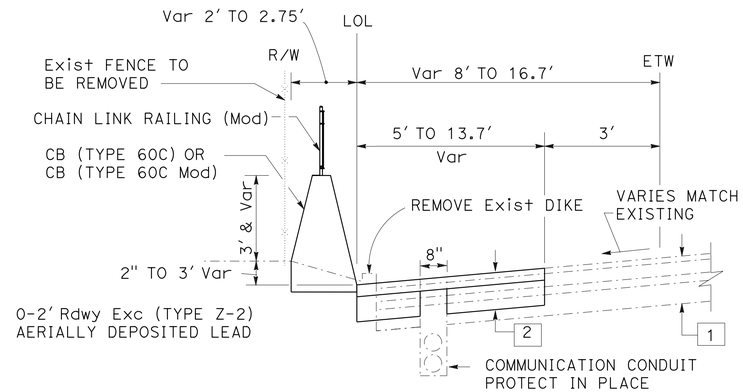

Sta 475+15 TO Sta 476+95

TYPICAL PAVEMENT STRUCTURAL SECTIONS

1
- Exist
- 0.35' ASPHALT CONCRETE (TYPE B)
- 0.66' CLASS A CEMENT TREATED BASE
- 0.25' CLASS 3 AGGREGATE BASE
- 0.85' CLASS 4 AGGREGATE SUBBASE

2
- 0.60' HOT MIX ASPHALT (TYPE A)
- 1.20' LEAN CONCRETE BASE (LCB)

LEGEND:

EXISTING

NEW SECTION

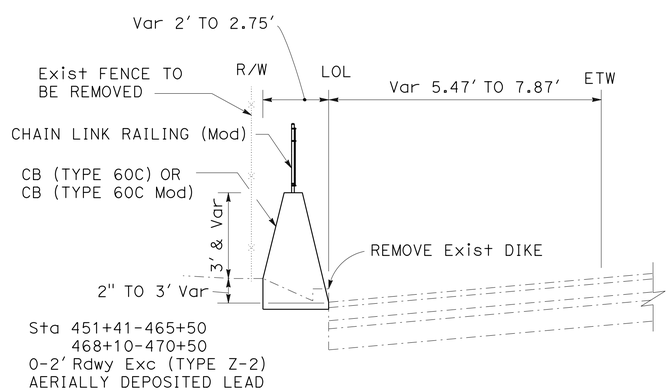

Sta 451+41 TO Sta 470+50

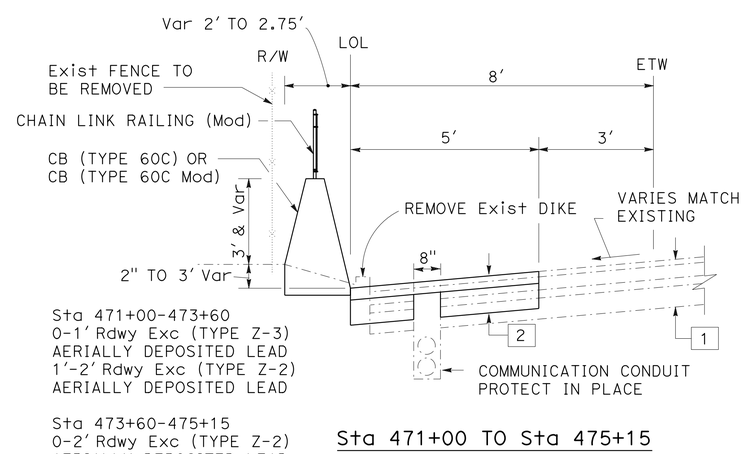

Sta 471+00 TO Sta 475+15

TYPICAL CROSS SECTIONS

NO SCALE

X-1

STATE OF CALIFORNIA - DEPARTMENT OF TRANSPORTATION
Caltrans® TRAFFIC DESIGN

FUNCTIONAL SUPERVISOR: MOHAMMED CHOWDHURY

CALCULATED-DESIGNED BY: ESTHER M. KIM
CHECKED BY: MOHAMMED CHOWDHURY

REVISED BY | DATE REVISED

LAST REVISION 00-00-00 | DATE PLOTTED => 24-SEP-2015 | TIME PLOTTED => 14:38

Dist	COUNTY	ROUTE	POST MILES TOTAL PROJECT	SHEET No.	TOTAL SHEETS
07	LA	101	8.5/9.4	3	62

REGISTERED CIVIL ENGINEER DATE 2/25/15

6-29-15
PLANS APPROVAL DATE

REGISTERED PROFESSIONAL ENGINEER
ESTHER M. KIM
No. C48363
Exp. 6/30/16
CIVIL
STATE OF CALIFORNIA

THE STATE OF CALIFORNIA OR ITS OFFICERS OR AGENTS SHALL NOT BE RESPONSIBLE FOR THE ACCURACY OR COMPLETENESS OF SCANNED COPIES OF THIS PLAN SHEET.

NOTES:

1. FOR ACCURATE RIGHT OF WAY DATA, CONTACT RIGHT OF WAY ENGINEERING AT THE DISTRICT OFFICE.
2. STATIONS ARE REFERENCED TO ℄ ROUTE 101 LINE UNLESS OTHERWISE NOTED.
3. FOR ELECTROLIER POLE DETAILS, SEE ELECTRICAL PLANS.
4. REMOVE CHAIN LINK FENCE AFTER THE CONSTRUCTION OF THE BARRIER.

CURVE DATA				
No.	R	△	L	T
60	4000.00′	32°06′56″	2242.09′	1151.35′

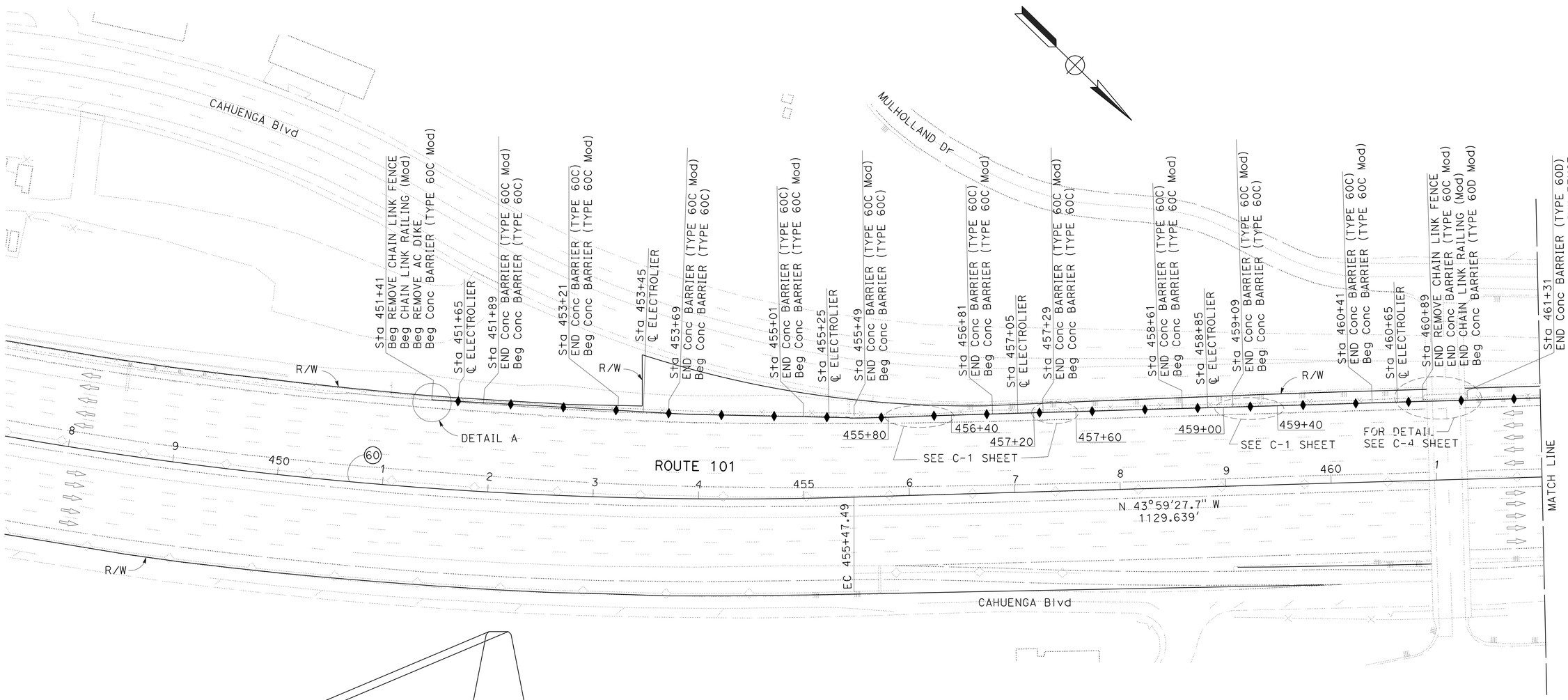

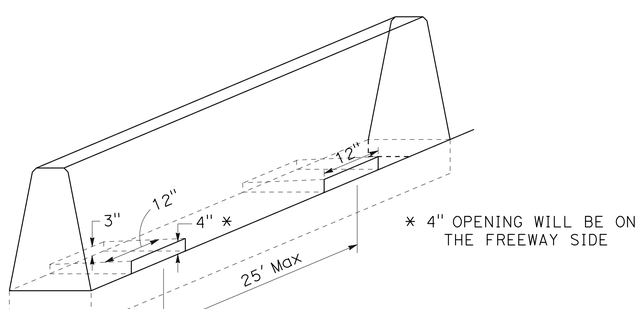

TYPICAL CONCRETE BARRIER (TYPE 60C) WITH SCUPPERS

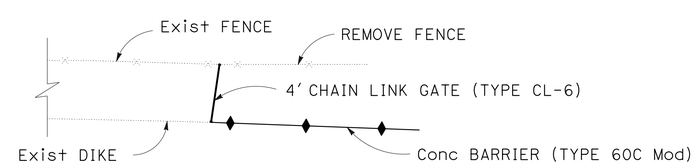

DETAIL A

LAYOUT
SCALE: 1"=50′

L-1

STATE OF CALIFORNIA - DEPARTMENT OF TRANSPORTATION
Caltrans
TRAFFIC DESIGN

FUNCTIONAL SUPERVISOR: MOHAMMED CHOWDHURY
CALCULATED-DESIGNED BY: ESTHER M. KIM
CHECKED BY: MOHAMMED CHOWDHURY
REVISED BY
DATE REVISED

LAST REVISION 00-00-00
DATE PLOTTED => 24-SEP-2015
TIME PLOTTED => 14:38

Dist	COUNTY	ROUTE	POST MILES TOTAL PROJECT	SHEET No.	TOTAL SHEETS
07	LA	101	8.5/9.4	4	62

REGISTERED CIVIL ENGINEER DATE 2/25/15

6-29-15
PLANS APPROVAL DATE

REGISTERED PROFESSIONAL ENGINEER ESTHER M. KIM No. C48363 Exp. 6/30/16 CIVIL STATE OF CALIFORNIA

THE STATE OF CALIFORNIA OR ITS OFFICERS OR AGENTS SHALL NOT BE RESPONSIBLE FOR THE ACCURACY OR COMPLETENESS OF SCANNED COPIES OF THIS PLAN SHEET.

NOTES:

1. FOR ACCURATE RIGHT OF WAY DATA, CONTACT RIGHT OF WAY ENGINEERING AT THE DISTRICT OFFICE.

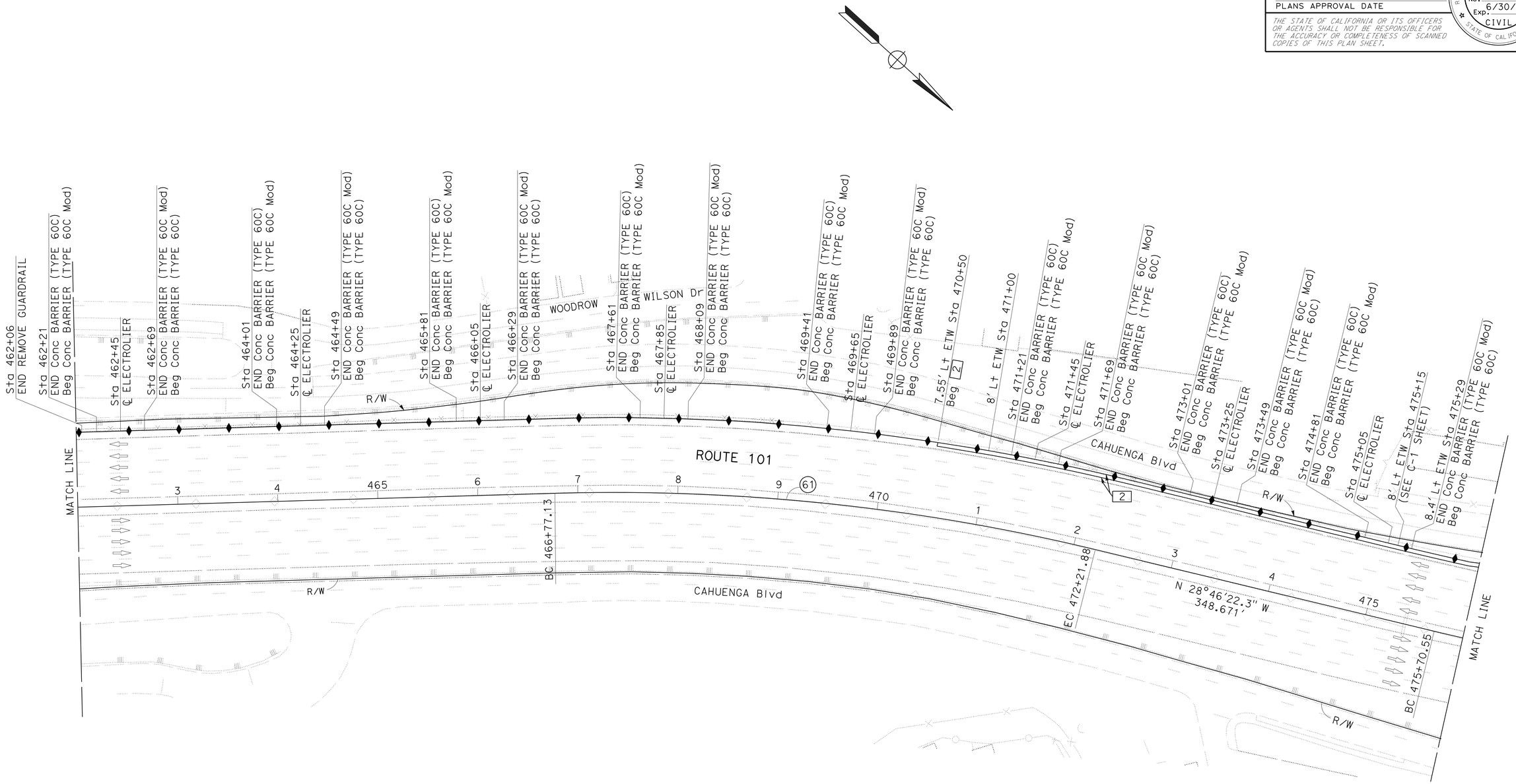

CURVE DATA				
No.	R	△	L	T
61	2051.00'	15°13'05"	544.75'	273.99'

LAYOUT

SCALE: 1"=50'

L-2

STATE OF CALIFORNIA - DEPARTMENT OF TRANSPORTATION

Caltrans

TRAFFIC DESIGN

FUNCTIONAL SUPERVISOR: MOHAMMED CHOWDHURY

CALCULATED-DESIGNED BY: ESTHER M. KIM

CHECKED BY: MOHAMMED CHOWDHURY

REVISED BY

DATE REVISED

LAST REVISION 00-00-00

DATE PLOTTED => 24-SEP-2015

TIME PLOTTED => 14:38

Dist	COUNTY	ROUTE	POST MILES TOTAL PROJECT	SHEET No.	TOTAL SHEETS
07	LA	101	8.5/9.4	5	62

REGISTERED CIVIL ENGINEER 2/25/15 DATE

6-29-15
PLANS APPROVAL DATE

REGISTERED PROFESSIONAL ENGINEER ESTHER M. KIM No. C48363 Exp. 6/30/16 CIVIL STATE OF CALIFORNIA

THE STATE OF CALIFORNIA OR ITS OFFICERS OR AGENTS SHALL NOT BE RESPONSIBLE FOR THE ACCURACY OR COMPLETENESS OF SCANNED COPIES OF THIS PLAN SHEET.

NOTES:

1. FOR ACCURATE RIGHT OF WAY DATA, CONTACT RIGHT OF WAY ENGINEERING AT THE DISTRICT OFFICE.

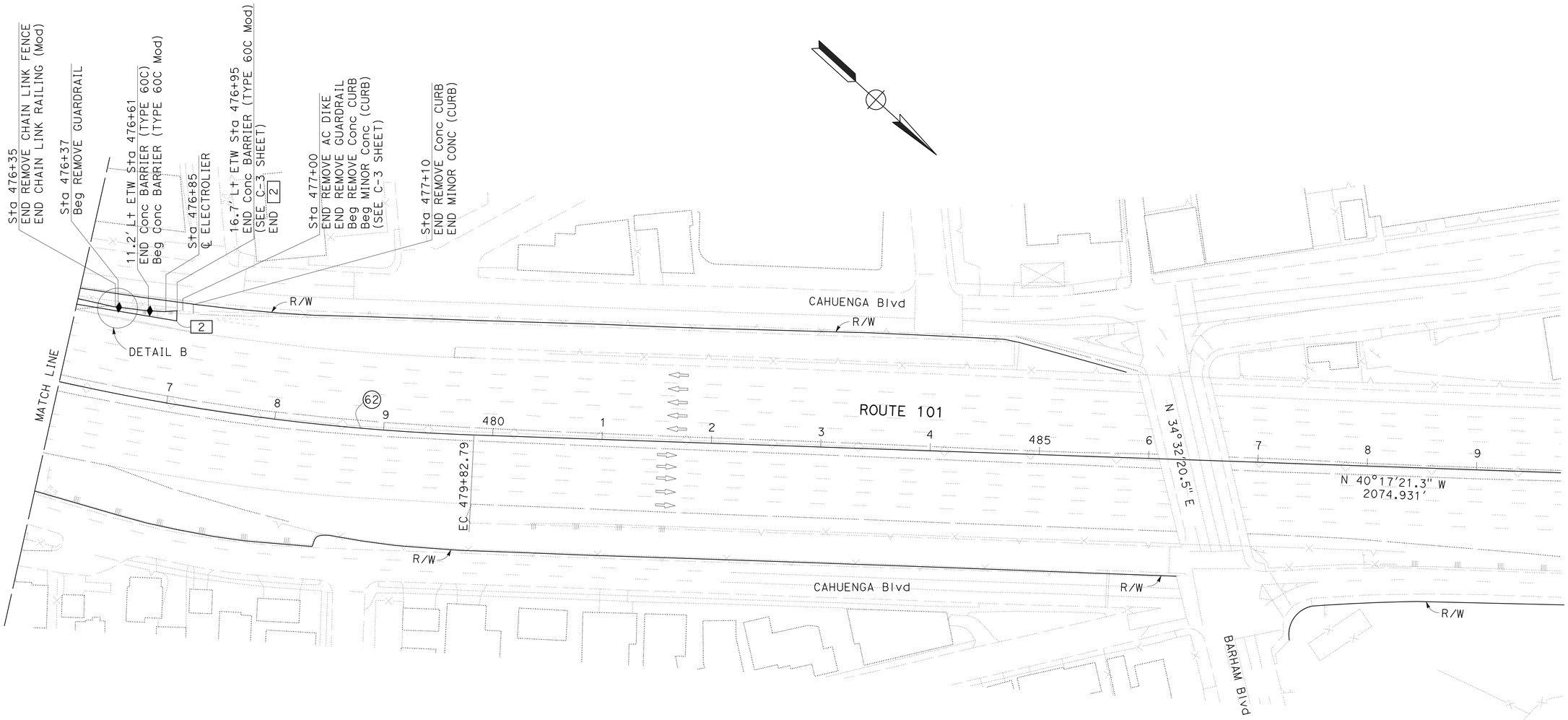

CURVE DATA				
No.	R	△	L	T
62	2051.00'	11°30'58"	412.24'	206.82'

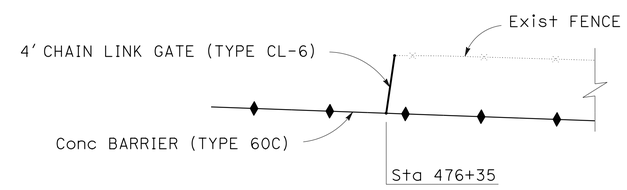

DETAIL B

LAYOUT
SCALE: 1"=50'

L-3

STATE OF CALIFORNIA - DEPARTMENT OF TRANSPORTATION
Caltrans
TRAFFIC DESIGN

FUNCTIONAL SUPERVISOR: MOHAMMED CHOWDHURY
CALCULATED-DESIGNED BY: ESTHER M. KIM
CHECKED BY: MOHAMMED CHOWDHURY
REVISED BY
DATE REVISED

LAST REVISION 00-00-00
DATE PLOTTED => 24-SEP-2015
TIME PLOTTED => 14:38

Dist	COUNTY	ROUTE	POST MILES TOTAL PROJECT	SHEET No.	TOTAL SHEETS
07	LA	101	8.5/9.4	6	62

REGISTERED CIVIL ENGINEER 2/25/15 DATE

6-29-15
PLANS APPROVAL DATE

REGISTERED PROFESSIONAL ENGINEER ESTHER M. KIM No. C48363 Exp. 6/30/16 CIVIL STATE OF CALIFORNIA

THE STATE OF CALIFORNIA OR ITS OFFICERS OR AGENTS SHALL NOT BE RESPONSIBLE FOR THE ACCURACY OR COMPLETENESS OF SCANNED COPIES OF THIS PLAN SHEET.

NOTES:

1. FOR CONCRETE BARRIER SECTION, SEE X-1 AND CONSTRUCTION DETAILS SHEETS.

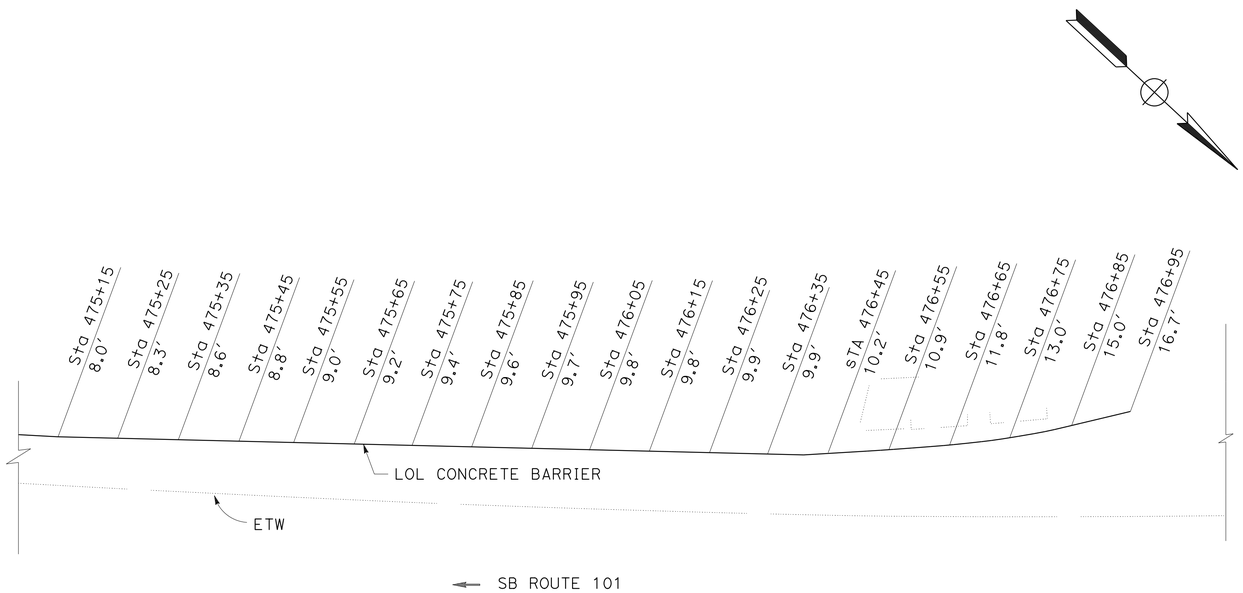

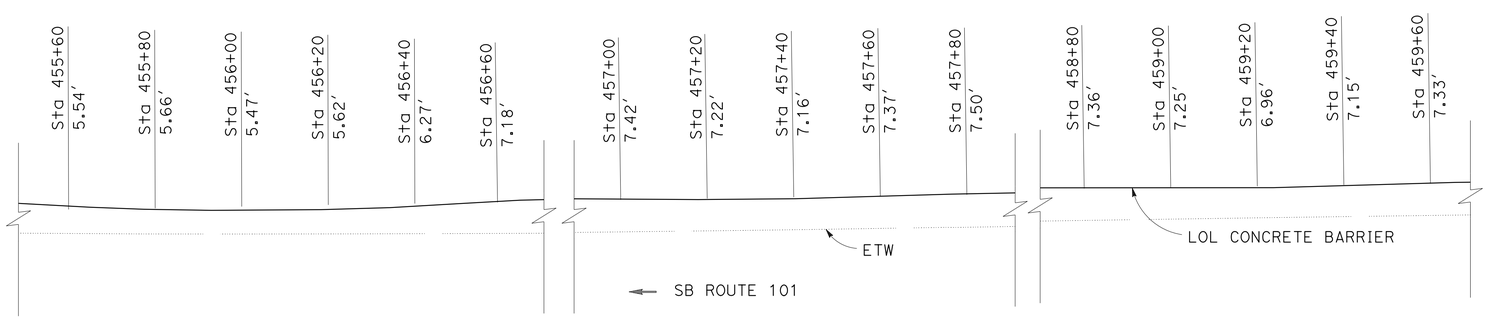

CONCRETE BARRIER DISTANCE OFFSET FROM ETW

CONSTRUCTION DETAILS

NO SCALE

C-1

STATE OF CALIFORNIA - DEPARTMENT OF TRANSPORTATION
Caltrans® TRAFFIC DESIGN

FUNCTIONAL SUPERVISOR: MOHAMMED CHOWDHURY

CALCULATED-DESIGNED BY: ESTHER M. KIM
CHECKED BY: MOHAMMED CHOWDHURY

REVISED BY
DATE REVISED

LAST REVISION 00-00-00
DATE PLOTTED => 24-SEP-2015
TIME PLOTTED => 14:38

Dist	COUNTY	ROUTE	POST MILES TOTAL PROJECT	SHEET No.	TOTAL SHEETS
07	LA	101	8.5/9.4	7	62

REGISTERED CIVIL ENGINEER 2/25/15 DATE

6-29-15
PLANS APPROVAL DATE

REGISTERED PROFESSIONAL ENGINEER ESTHER M. KIM No. C48363 Exp. 6/30/16 CIVIL STATE OF CALIFORNIA

THE STATE OF CALIFORNIA OR ITS OFFICERS OR AGENTS SHALL NOT BE RESPONSIBLE FOR THE ACCURACY OR COMPLETENESS OF SCANNED COPIES OF THIS PLAN SHEET.

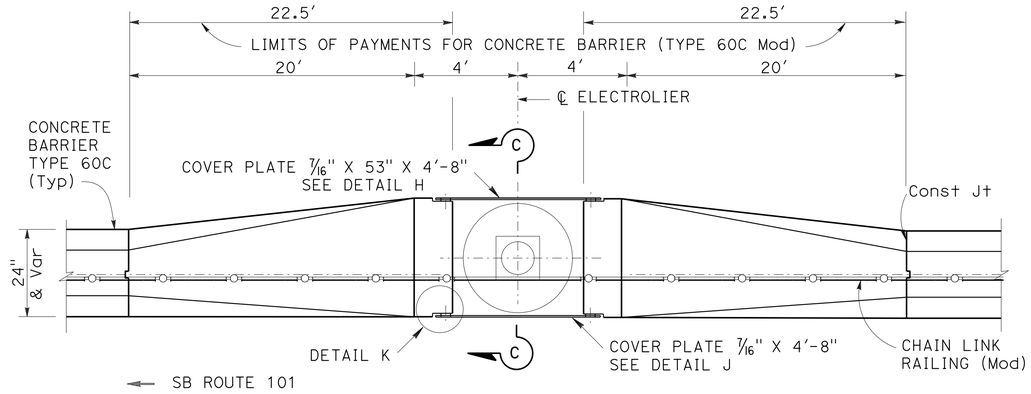

PLAN

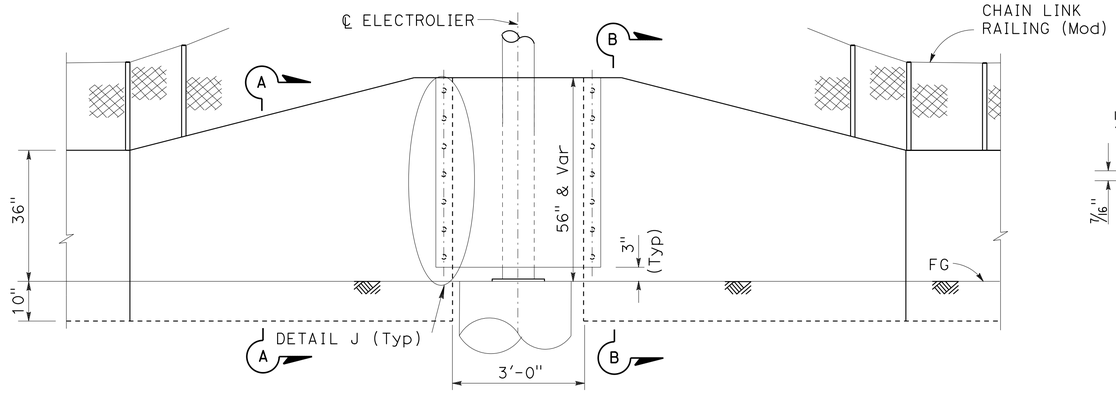

ELEVATION

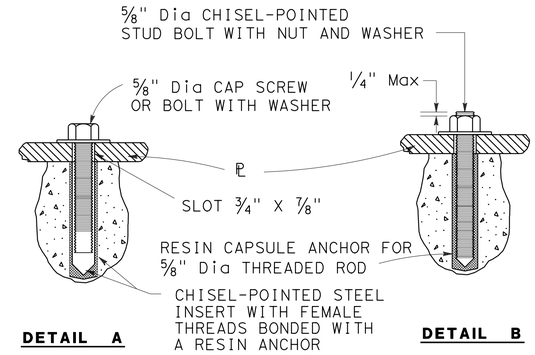

ALTERNATIVE ANCHORAGE

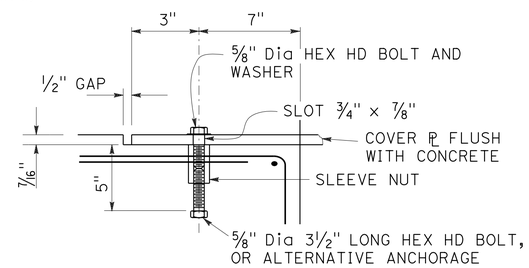

DETAIL K

NOTES:

1. FOR ROADBED SURFACES OFFSET GREATER THAN 3" AND LESS THAN OR EQUAL TO 8", USE TWO #5 REBARS AT 3" ABOVE THE LOWER ROADBED SURFACE. FOR ROADBED SURFACES OFFSET GREATER THAN 8" AND LESS THAN OR EQUAL TO 12", USE TWO #5 REBARS AT 3" ABOVE THE LOWER ROADBED SURFACE AND TWO #5 REBARS AT 8" ABOVE THE LOWER ROADBED SURFACE. FOR ROADBED SURFACES OFFSET GREATER THAN 12" AND LESS THAN OR EQUAL TO 24", USE TWO #5 REBAR AT 3" ABOVE THE LOWER ROADBED SURFACE AND TWO #5 REBARS AT EVERY 8" INCREMENT VERICAL SPACING ABOVE THE FIRST TWO #5 REBARS.
2. FOR ELECTROLIER LOCATIONS AND DETAILS, SEE "ELECTRICAL PLANS.
3. DURING POLE ERECTION THE POST SHALL BE RAKED AS NECESSARY WITH THE USE OF LEVELING NUTS TO PROVIDE A PLUMB POLE AXIS.
4. FOR DETAILS NOT SHOWN, SEE "2010 STANDARD PLANS".
5. RESIN CAPSULE ANCHORAGE IS SUBJECT TO APPROVAL OF THE ENGINEER. INSTALLATION PROCEDURES SHALL COMPLY WITH MANUFACTURER'S INSTRUCTIONS.
6. DETAIL B SIMILAR TO DETAIL A EXCEPT FOR ANCHORAGE DEVICES.
7. THE CONTRACTOR MUST VERIFY DIMENSIONS ON FIELD BEFORE ORDERING OR FABRICATING MATERIALS.

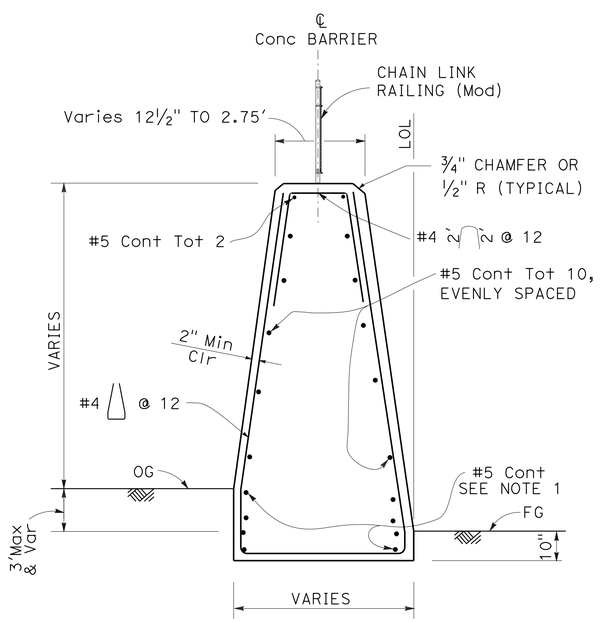

SECTION A-A

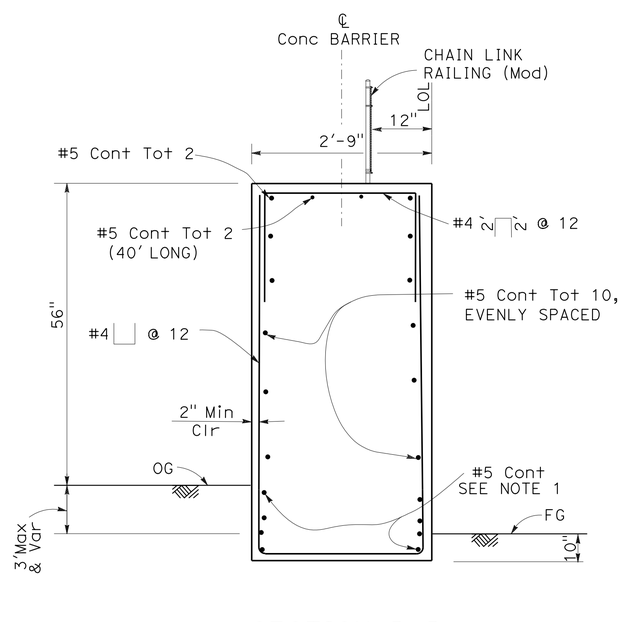

SECTION B-B

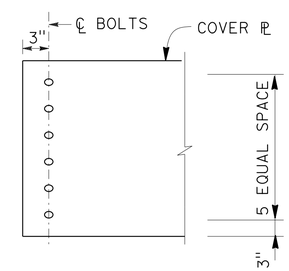

DETAIL H

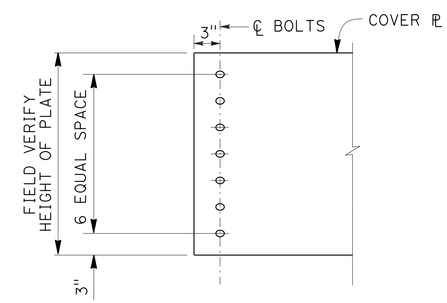

DETAIL J

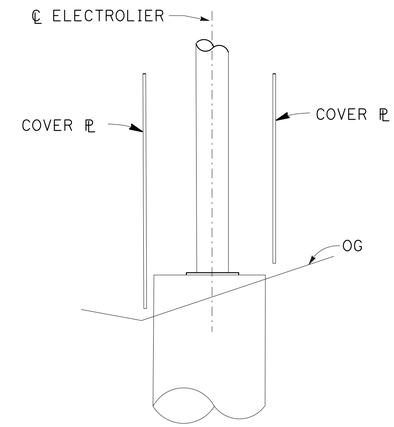

SECTION C-C

CONSTRUCTION DETAILS

NO SCALE

C-2

STATE OF CALIFORNIA - DEPARTMENT OF TRANSPORTATION
Caltrans® TRAFFIC DESIGN

FUNCTIONAL SUPERVISOR: MOHAMMED CHOWDHURY
CALCULATED-DESIGNED BY: ESTHER M. KIM
CHECKED BY: MOHAMMED CHOWDHURY
REVISED BY
DATE REVISED

LAST REVISION 00-00-00 | DATE PLOTTED => 24-SEP-2015 | TIME PLOTTED => 14:38

Dist	COUNTY	ROUTE	POST MILES TOTAL PROJECT	SHEET No.	TOTAL SHEETS
07	LA	101	8.5/9.4	8	62

REGISTERED CIVIL ENGINEER 2/25/15 DATE

6-29-15
PLANS APPROVAL DATE

REGISTERED PROFESSIONAL ENGINEER ESTHER M. KIM No. C48363 Exp. 6/30/16 CIVIL STATE OF CALIFORNIA

THE STATE OF CALIFORNIA OR ITS OFFICERS OR AGENTS SHALL NOT BE RESPONSIBLE FOR THE ACCURACY OR COMPLETENESS OF SCANNED COPIES OF THIS PLAN SHEET.

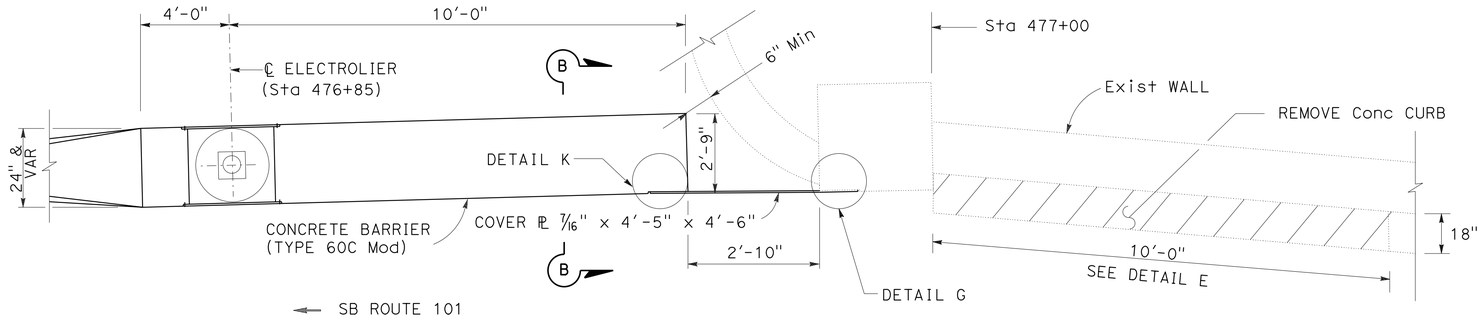

PLAN

NOTES:

1. THE CONTRACTOR MUST VERIFY DIMENSIONS ON FIELD BEFORE ORDERING OR FABRICATING MATERIALS.
2. STRUCTURAL STEEL, FY=50,000 psi UNLESS OTHERWISE NOTED.
3. FOR SECTION B-B AND DETAILS NOT SHOWN, SEE SHEET C-2.

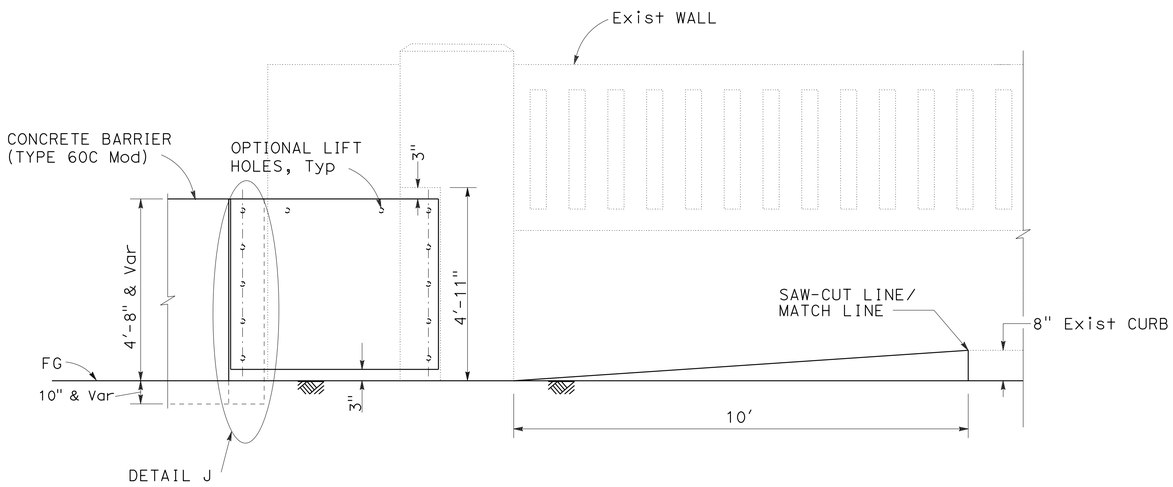

ELEVATION

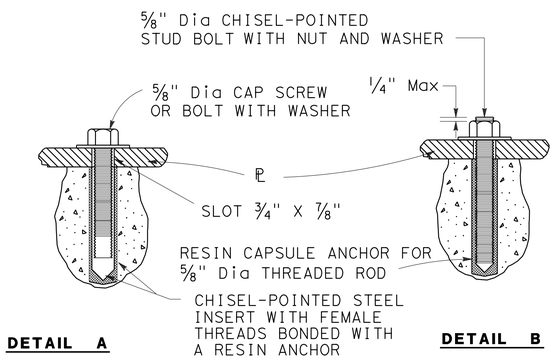

ALTERNATIVE ANCHORAGE

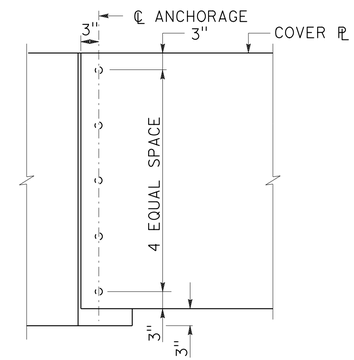

DETAIL J

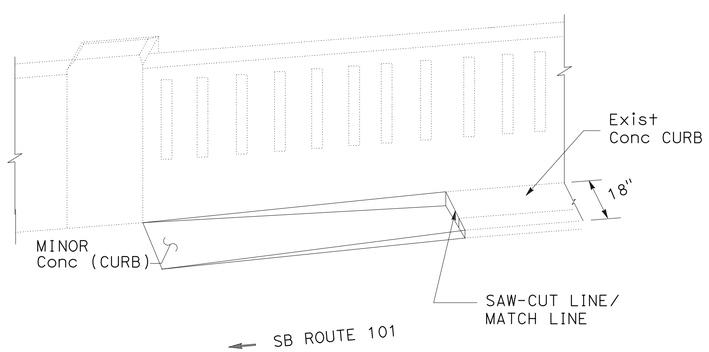

DETAIL E

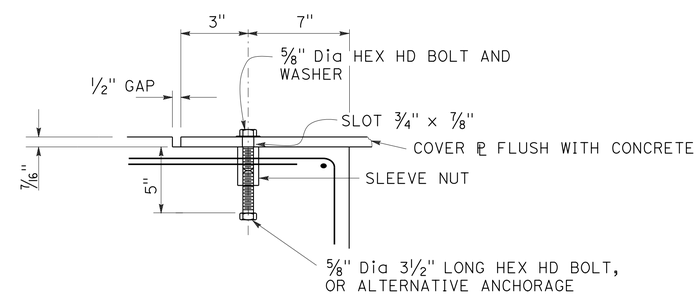

DETAIL K

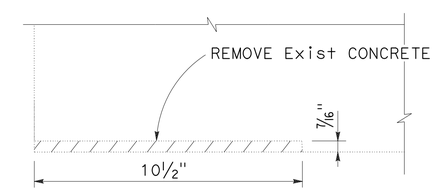

DETAIL G

CONSTRUCTION DETAILS

NO SCALE

C-3

STATE OF CALIFORNIA - DEPARTMENT OF TRANSPORTATION
TRAFFIC DESIGN

FUNCTIONAL SUPERVISOR: MOHAMMED CHOWDHURY
CALCULATED-DESIGNED BY: ESTHER M. KIM
CHECKED BY: MOHAMMED CHOWDHURY
REVISED BY
DATE REVISED

LAST REVISION 00-00-00
DATE PLOTTED => 24-SEP-2015
TIME PLOTTED => 14:38

Dist	COUNTY	ROUTE	POST MILES TOTAL PROJECT	SHEET No.	TOTAL SHEETS
07	LA	101	8.5/9.4	9	62

REGISTERED CIVIL ENGINEER DATE 2/25/15

PLANS APPROVAL DATE 6-29-15

REGISTERED PROFESSIONAL ENGINEER ESTHER M. KIM No. C48363 Exp. 6/30/16 CIVIL STATE OF CALIFORNIA

THE STATE OF CALIFORNIA OR ITS OFFICERS OR AGENTS SHALL NOT BE RESPONSIBLE FOR THE ACCURACY OR COMPLETENESS OF SCANNED COPIES OF THIS PLAN SHEET.

NOTE

1. THE CONTRACTOR MUST VERIFY DIMENSIONS ON FIELD BEFORE ORDERING OR FABRICATING MATERIALS.

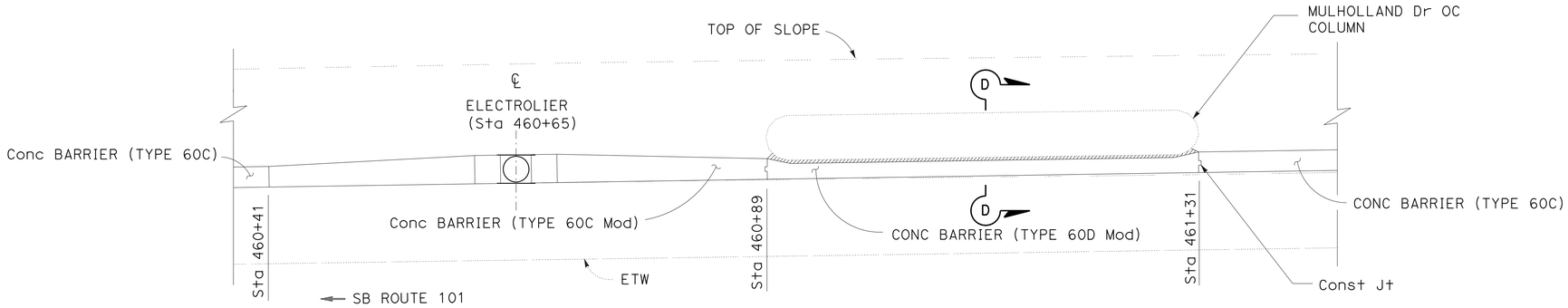

CONCRETE BARRIER TRANSITION AT MULHOLLAND Dr OC

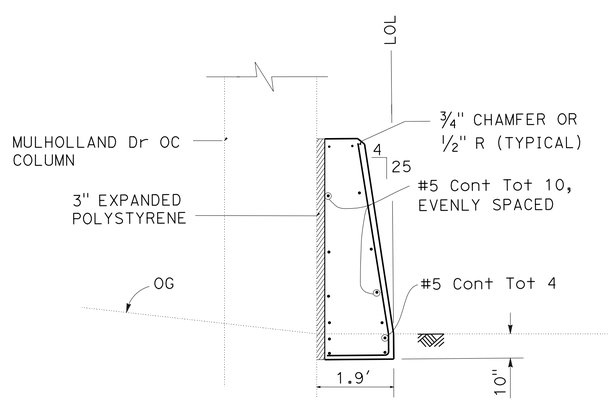

SECTION D-D

CONSTRUCTION DETAILS

NO SCALE

C-4

STATE OF CALIFORNIA - DEPARTMENT OF TRANSPORTATION

Caltrans® **TRAFFIC DESIGN**

FUNCTIONAL SUPERVISOR: MOHAMMED CHOWDHURY

CALCULATED-DESIGNED BY: ESTHER M. KIM

CHECKED BY: MOHAMMED CHOWDHURY

REVISED BY | DATE REVISED

LAST REVISION 00-00-00 | DATE PLOTTED => 24-SEP-2015 | TIME PLOTTED => 14:38

Dist	COUNTY	ROUTE	POST MILES TOTAL PROJECT	SHEET No.	TOTAL SHEETS
07	LA	101	8.5/9.4	10	62

REGISTERED CIVIL ENGINEER 2/25/15 DATE

6-29-15
PLANS APPROVAL DATE

REGISTERED PROFESSIONAL ENGINEER ESTHER M. KIM No. C48363 Exp. 6/30/16 CIVIL STATE OF CALIFORNIA

THE STATE OF CALIFORNIA OR ITS OFFICERS OR AGENTS SHALL NOT BE RESPONSIBLE FOR THE ACCURACY OR COMPLETENESS OF SCANNED COPIES OF THIS PLAN SHEET.

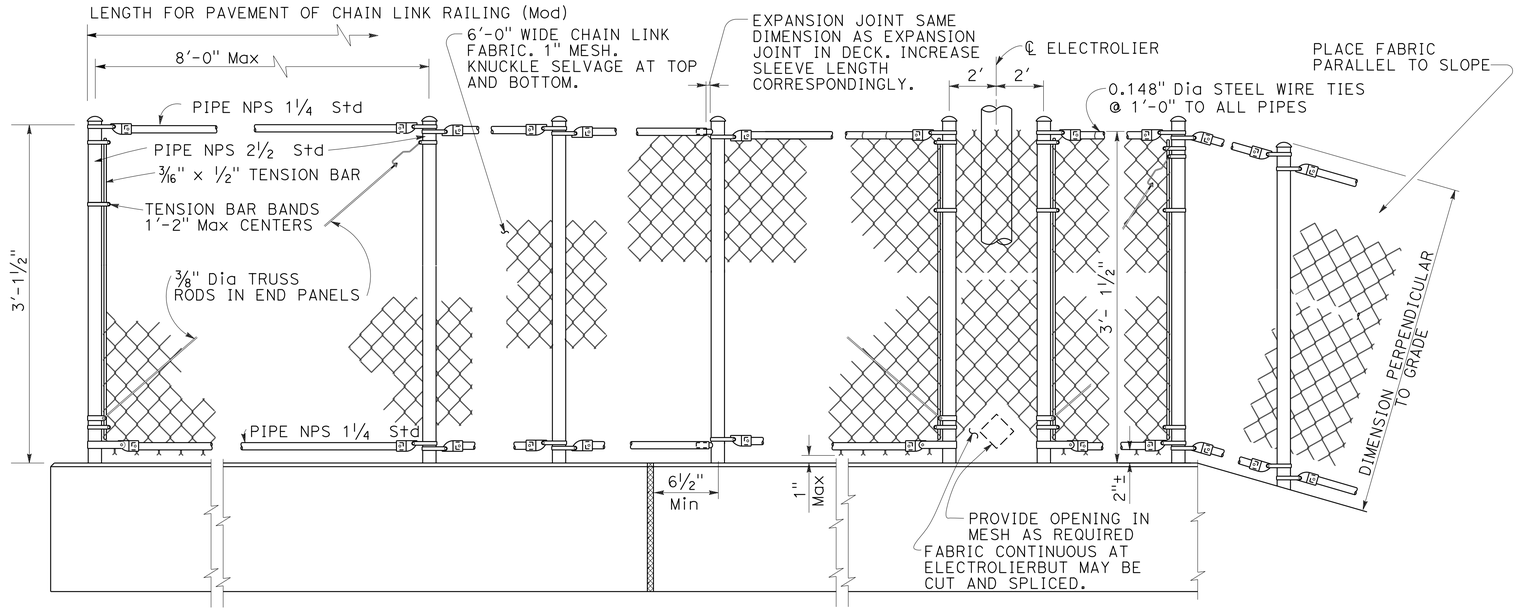

END POST **INTERMEDIATE POSTS** **EXPANSION JOINTS** **AT ELECTROLIER** **ON SLOPES**

CHAIN LINK RAILING (Mod)

NOTES:

1. RAILING ASSEMBLY EXCEPT CHAIN LINK FABRIC MUST BE GALVANIZED AFTER FABRICATION.
2. PEEN BOLT THREADS.
3. RAILING SHALL CONFORM TO HORIZONTAL AND VERTICAL ALIGNMENT. POSTS SHALL BE VERTICAL. TOP AND BOTTOM PIPES SHALL BE BENT IF RADIUS IS 148'-0" OR LESS; MAY BE ON 8'-0" CHORDS IF RADIUS IS OVER 148'-0".
4. WHEN RAILING IS ON SLOPE, 3'-0" CHAIN LINK FABRIC SHALL BE PLACED PARALLEL TO SLOPE.
5. SEE LAYOUT PLANS FOR LIMITS OF CHAIN LINK RAILING (Mod).
6. FOR ADDITIONAL INFORMATION, SEE B11-7.

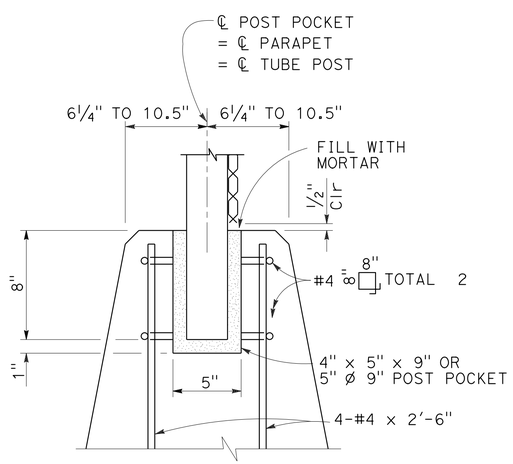

TYPICAL POST ANCHORAGE DETAIL

ALTERNATIVE DETAILS

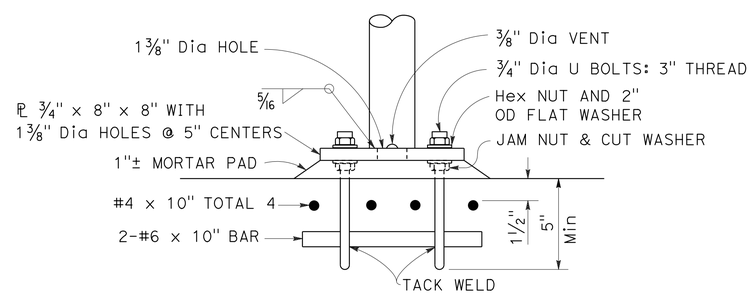

ALTERNATIVE ANCHORAGE DETAIL

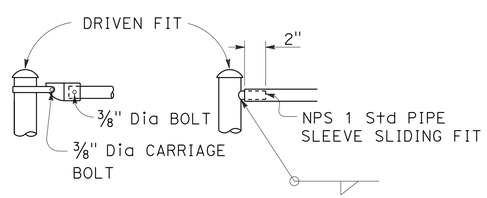

TYPICAL CONNECTION DETAILS

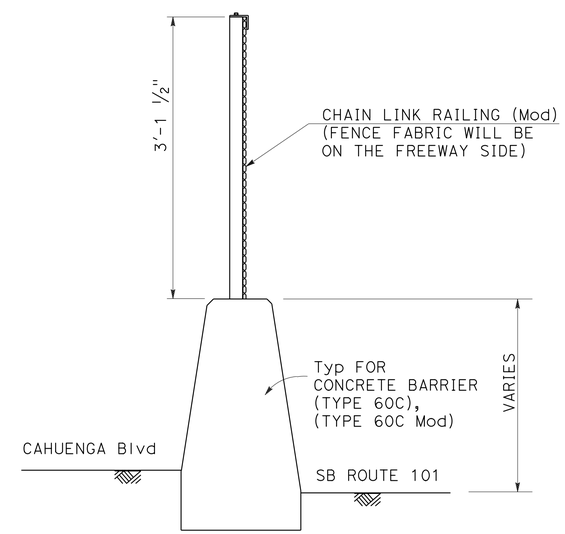

TYPICAL SECTION

CONSTRUCTION DETAILS

NO SCALE

C-5

STATE OF CALIFORNIA - DEPARTMENT OF TRANSPORTATION
Caltrans TRAFFIC DESIGN
FUNCTIONAL SUPERVISOR MOHAMMED CHOWDHURY
CALCULATED-DESIGNED BY ESTHER M. KIM
CHECKED BY MOHAMMED CHOWDHURY
REVISED BY
DATE REVISED

LAST REVISION 00-00-00
DATE PLOTTED => 24-SEP-2015
TIME PLOTTED => 14:38

Dist	COUNTY	ROUTE	POST MILES TOTAL PROJECT	SHEET No.	TOTAL SHEETS
07	LA	101	8.5/9.4	11	62

N. Celina Aviles 6/5/15
REGISTERED CIVIL ENGINEER DATE

6-29-15
PLANS APPROVAL DATE

REGISTERED PROFESSIONAL ENGINEER N. CELINA AVILES No. 57106 Exp. 12/31/16 CIVIL STATE OF CALIFORNIA

THE STATE OF CALIFORNIA OR ITS OFFICERS OR AGENTS SHALL NOT BE RESPONSIBLE FOR THE ACCURACY OR COMPLETENESS OF SCANNED COPIES OF THIS PLAN SHEET.

NOTES:

1. FOR ACCURATE RIGHT OF WAY DATA, CONTACT RIGHT OF WAY ENGINEERING AT DISTRICT OFFICE.

UTILITY OWNERSHIP:

CABLE	- TIME WARNER CABLE COMPANY
	- THETA CABLE OF CALIFORNIA
	- METROMEDIA FIBER NETWORK
	- QWEST COMMUNICATIONS INTERNATIONAL
GAS	- SOUTHERN CALIFORNIA GAS COMPANY
POWER	- LA DEPARTMENT OF WATER AND POWER
	- SOUTHERN CALIFORNIA EDISON
TELEPHONE	- AMERICAN TELEPHONE AND TELEGRAPH CORPORATION
	- L3 COMMUNICATIONS
	- VERIZON COMMUNICATIONS
WATER	- LA DEPARTMENT OF WATER AND POWER

ABBREVIATIONS: (NOT LISTED IN CALTRANS STANDARD PLANS)

AT&T	AMERICAN TELEPHONE & TELEGRAPH CORPORATION
Bu Ca	BURIED CABLE
CA	CALIFORNIA
CB	CATCH BASIN
CCP	CENTRIFUGAL CONCRETE PIPE
CL	CENTERLINE
Csg	CASING
CTC	CA TRANSPORTATION COMMISSION
Du	DUCT
HP	HIGH PRESSURE
JC	JUNCTION CHAMBER
LA	LOS ANGELES
LADWP (P)	LA DEPARTMENT OF WATER AND POWER (POWER)
LADWP (W)	LA DEPARTMENT OF WATER AND POWER (WATER)
L3	L3 COMMUNICATIONS
M	MEDIUM PRESSURE
MFN	METROMEDIA FIBER NETWORK
MTD	MULTIPLE TILE DUCT
Perf	PERFORATED
PMP	PERFORATED METAL PIPE
QWEST	QWEST COMMUNICATIONS INTERNATIONAL, INCORPORATED
RC	REINFORCED CONCRETE
SCE	SOUTHERN CALIFORNIA EDISON
SCG	SOUTHERN CALIFORNIA GAS COMPANY
Stl	STEEL
TWC	TIME WARNER CABLE COMPANY
Wtr	WATER

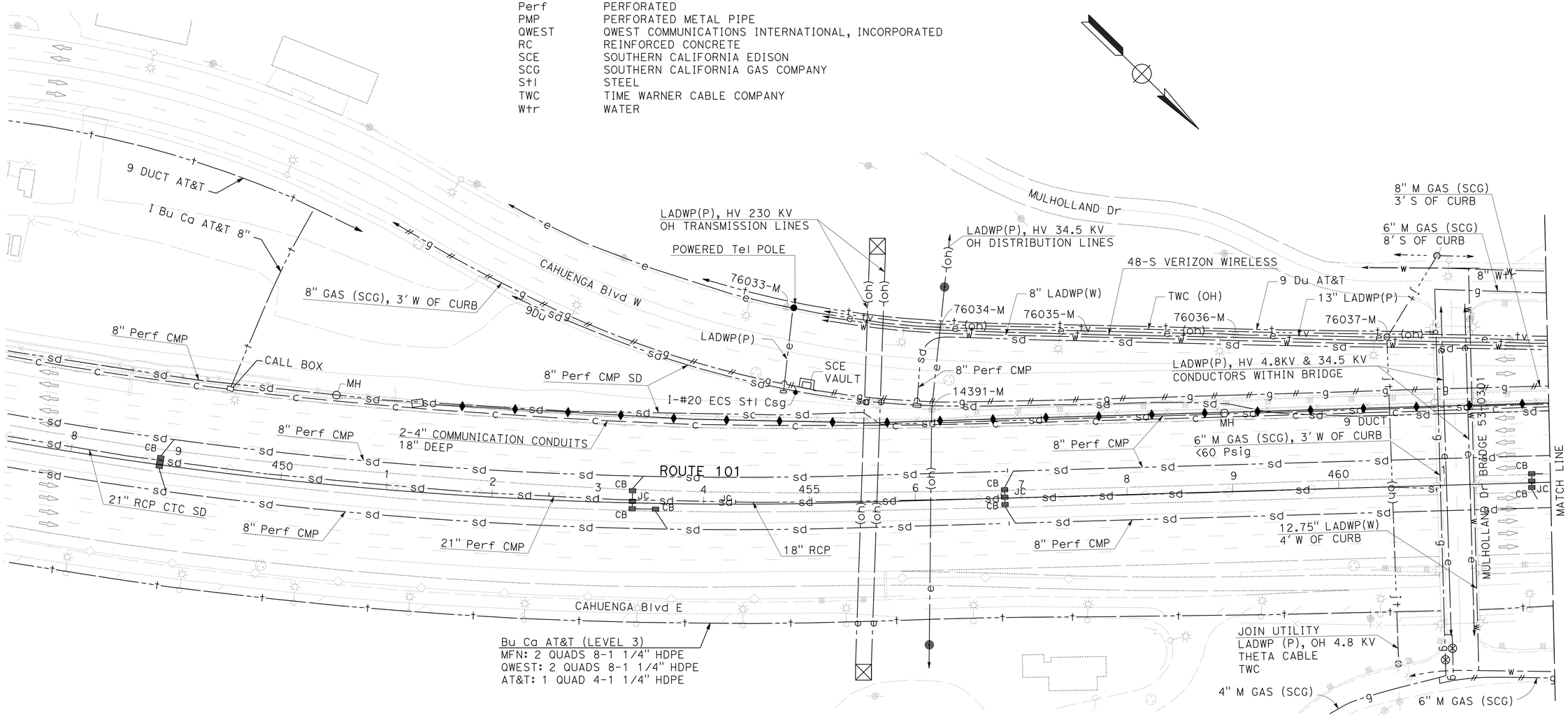

UTILITY PLAN

SCALE: 1"=50'

U-1

APPROVED FOR UTILITY INFORMATION ONLY

STATE OF CALIFORNIA - DEPARTMENT OF TRANSPORTATION
OFFICE OF DESIGN A

FUNCTIONAL SUPERVISOR: CELINA AVILES
CALCULATED-DESIGNED BY: DANIEL DOAN
CHECKED BY: NASSER RAZFAR
REVISED BY / DATE REVISED

S:\projects\287601\District7_Roadway\728760ka001.dgn

LAST REVISION DATE PLOTTED => 24-SEP-2015
TIME PLOTTED => 14:38

Dist	COUNTY	ROUTE	POST MILES TOTAL PROJECT	SHEET No.	TOTAL SHEETS
07	LA	101	8.5/9.4	12	62

N. Celina Aviles 6/5/15
REGISTERED CIVIL ENGINEER DATE

6-29-15
PLANS APPROVAL DATE

REGISTERED PROFESSIONAL ENGINEER
N. CELINA AVILES
No. 57106
Exp. 12/31/16
CIVIL
STATE OF CALIFORNIA

THE STATE OF CALIFORNIA OR ITS OFFICERS OR AGENTS SHALL NOT BE RESPONSIBLE FOR THE ACCURACY OR COMPLETENESS OF SCANNED COPIES OF THIS PLAN SHEET.

NOTES:

1. FOR ACCURATE RIGHT OF WAY DATA, CONTACT RIGHT OF WAY ENGINEERING AT DISTRICT OFFICE.

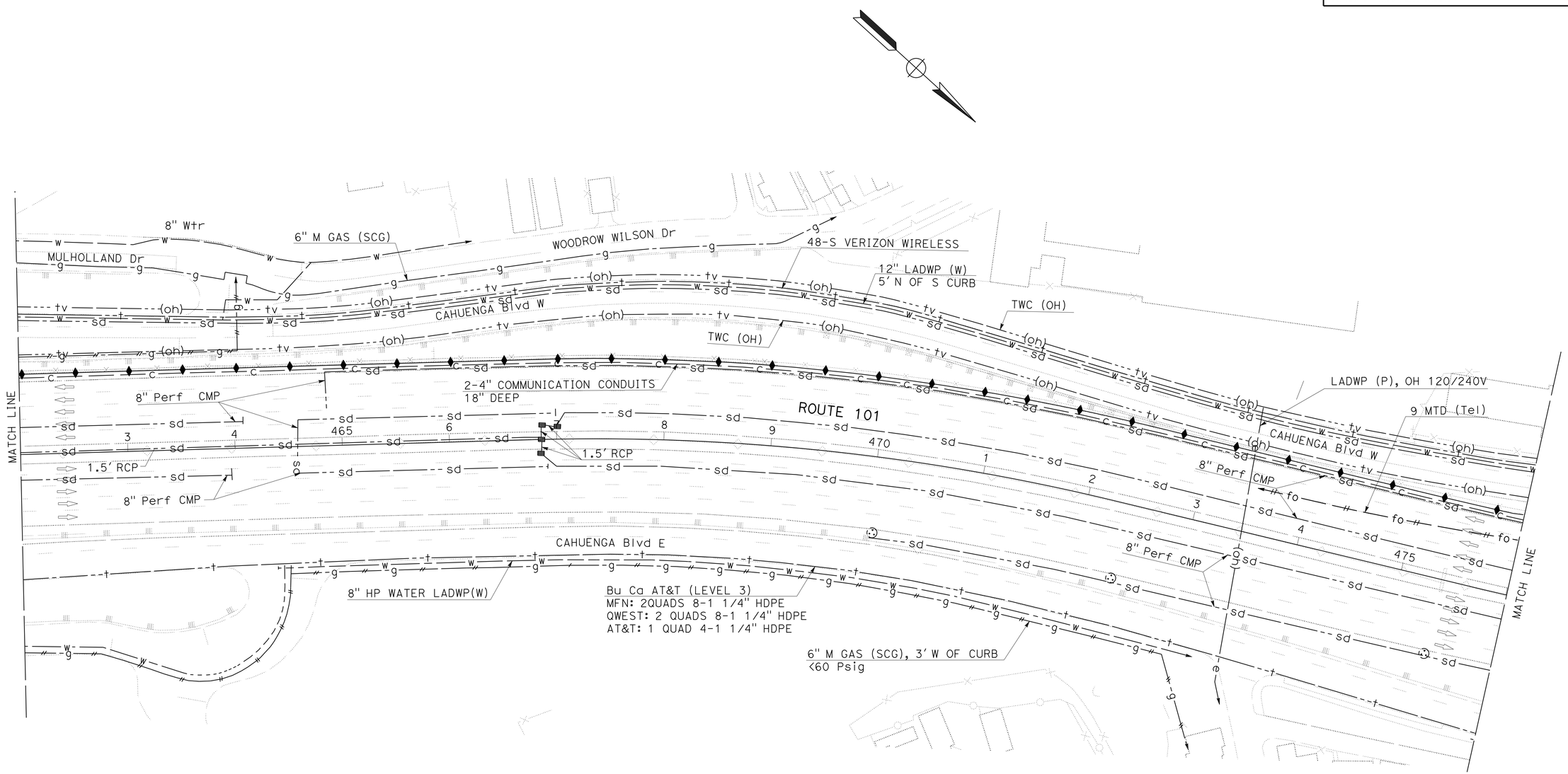

UTILITY PLAN

SCALE: 1"=50'

U-2

APPROVED FOR UTILITY INFORMATION ONLY

REVISED BY	DATE REVISED

CALCULATED-DESIGNED BY	CHECKED BY
DANIEL DOAN	NASSER RAZFAR

FUNCTIONAL SUPERVISOR: CELINA AVILES

STATE OF CALIFORNIA - DEPARTMENT OF TRANSPORTATION
OFFICE OF DESIGN A

S:\projects\287601\District7_Roadway\728760ka002.dgn

LAST REVISION 00-00-00 | DATE PLOTTED => 24-SEP-2015 | TIME PLOTTED => 14:38

BORDER LAST REVISED 7/2/2010 | USERNAME => s127951 | DGN FILE => 728760ka002.dgn | RELATIVE BORDER SCALE IS IN INCHES 0 1 2 3 | UNIT 1843 | PROJECT NUMBER & PHASE 07000209281

Dist	COUNTY	ROUTE	POST MILES TOTAL PROJECT	SHEET No.	TOTAL SHEETS
07	LA	101	8.5/9.4	13	62

N. Celina Aviles 6/5/15
REGISTERED CIVIL ENGINEER DATE

6-29-15
PLANS APPROVAL DATE

REGISTERED PROFESSIONAL ENGINEER
N. CELINA AVILES
No. 57106
Exp. 12/31/16
CIVIL
STATE OF CALIFORNIA

THE STATE OF CALIFORNIA OR ITS OFFICERS OR AGENTS SHALL NOT BE RESPONSIBLE FOR THE ACCURACY OR COMPLETENESS OF SCANNED COPIES OF THIS PLAN SHEET.

NOTES:

1. FOR ACCURATE RIGHT OF WAY DATA, CONTACT RIGHT OF WAY ENGINEERING AT DISTRICT OFFICE.

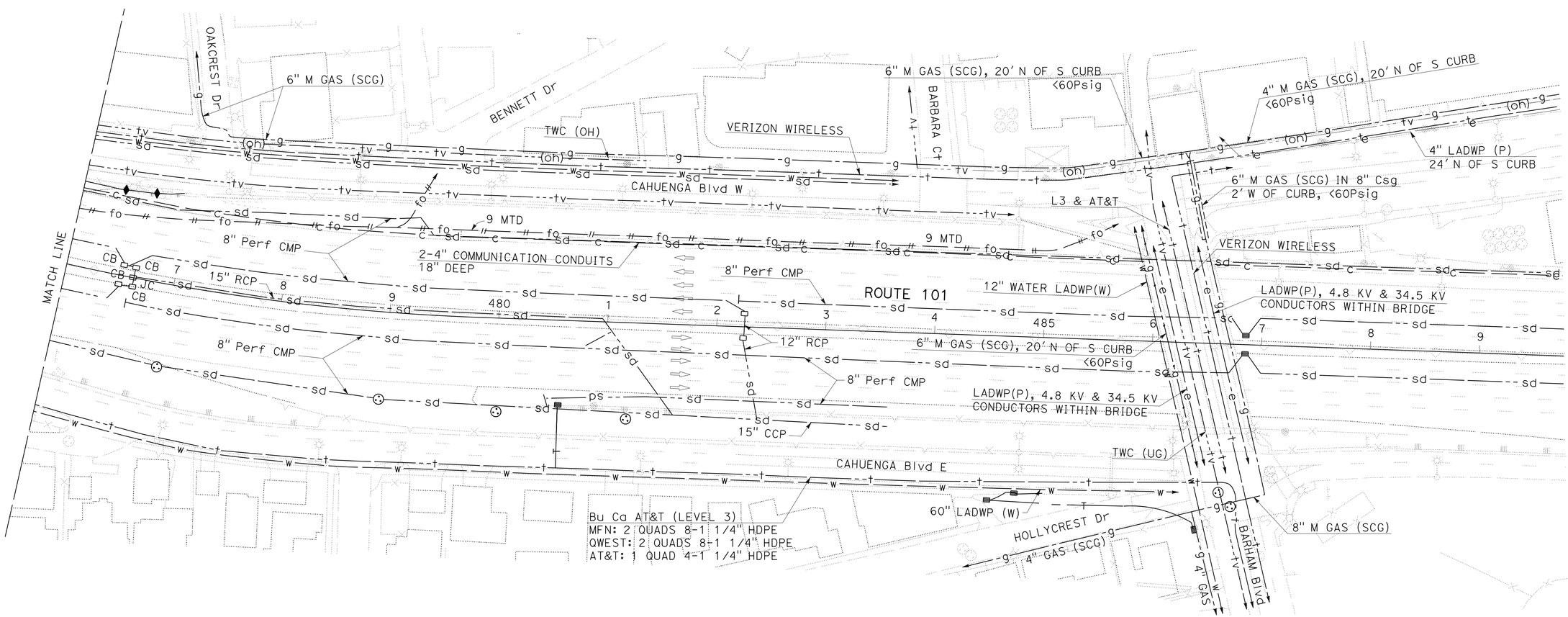

UTILITY PLAN

SCALE: 1"=50'

U-3

APPROVED FOR UTILITY INFORMATION ONLY

REVISED BY | DATE REVISED
DANIEL DOAN | NASSER RAZFAR
CALCULATED-DESIGNED BY | CHECKED BY
FUNCTIONAL SUPERVISOR | CELINA AVILES

STATE OF CALIFORNIA - DEPARTMENT OF TRANSPORTATION
OFFICE OF DESIGN A

S:\projects\287601\District7 Roadway\728760ka003.dgn

LAST REVISION 00-00-00 | DATE PLOTTED => 24-SEP-2015 | TIME PLOTTED => 14:38

BORDER LAST REVISED 7/2/2010 | USERNAME => s127951 | DGN FILE => 728760ka003.dgn | RELATIVE BORDER SCALE IS IN INCHES 0 1 2 3 | UNIT 1843 | PROJECT NUMBER & PHASE 07000209281

Dist	COUNTY	ROUTE	POST MILES TOTAL PROJECT	SHEET No.	TOTAL SHEETS
07	LA	101	8.5/9.4	14	62

REGISTERED CIVIL ENGINEER 2/25/15 DATE

6-29-15
PLANS APPROVAL DATE

REGISTERED PROFESSIONAL ENGINEER ESTHER M. KIM No. C48363 Exp. 6/30/16 CIVIL STATE OF CALIFORNIA

THE STATE OF CALIFORNIA OR ITS OFFICERS OR AGENTS SHALL NOT BE RESPONSIBLE FOR THE ACCURACY OR COMPLETENESS OF SCANNED COPIES OF THIS PLAN SHEET.

NOTES:

1. LOCATION OF CONSTRUCTION AREA SIGNS ARE APPROXIMATE. EXACT SIGN LOCATIONS WILL BE DETERMINED BY THE ENGINEER.
2. C40 (CA) SIGNS MUST BE PLACED APPROXIMATLY 500 FEET IN ADVANCE OF "ROAD WORK AHEAD" SIGN OR AS DETERMINED BY THE ENGINEER.

STATIONARY MOUNTED CONSTRUCTION AREA SIGNS

SIGN No. (X)	FEDERAL	CALIFORNIA	PANEL SIZE	SIGN MESSAGE	No. OF POSTS & SIZE	No. OF SIGNS
(A)	W20-1		48" X 48"	ROAD WORK AHEAD	1-4" X 6"	2
(B)		C40A(CA)	144" X 60"	TRAFFIC FINES DOUBLED IN WORK ZONES	2-6" X 6"	1
(C)	G20-2		48" X 24"	END ROAD WORK	1-4" X 6"	2
(D)		C40A(CA)	36" X 36"	TRAFFIC FINES DOUBLED IN WORK ZONES	1-4" X 4"	1
(E)	W20-1		36" X 36"	ROAD WORK AHEAD	1-4" X 4"	1
(F)	G20-2		36" X 18"	END ROAD WORK	1-4" X 4"	1

CONSTRUCTION AREA SIGNS

NO SCALE

APPROVED FOR CONSTRUCTION AREA SIGN WORK ONLY

CS-1

STATE OF CALIFORNIA - DEPARTMENT OF TRANSPORTATION
Caltrans
TRAFFIC DESIGN

FUNCTIONAL SUPERVISOR: MOHAMMED CHOWDHURY
CALCULATED-DESIGNED BY: ESTHER M. KIM
CHECKED BY: MOHAMMED CHOWDHURY
REVISED BY
DATE REVISED

LAST REVISION 00-00-00
DATE PLOTTED => 24-SEP-2015
TIME PLOTTED => 14:38

Dist	COUNTY	ROUTE	POST MILES TOTAL PROJECT	SHEET No.	TOTAL SHEETS
07	LA	101	8.5/9.4	15	62

REGISTERED CIVIL ENGINEER 2/25/15 DATE

6-29-15
PLANS APPROVAL DATE

REGISTERED PROFESSIONAL ENGINEER ESTHER M. KIM No. C48363 Exp. 6/30/16 CIVIL STATE OF CALIFORNIA

THE STATE OF CALIFORNIA OR ITS OFFICERS OR AGENTS SHALL NOT BE RESPONSIBLE FOR THE ACCURACY OR COMPLETENESS OF SCANNED COPIES OF THIS PLAN SHEET.

LEGEND:

- WORK AREA
- CHANNELIZER (SURFACE MOUNTED)
- TEMPORARY CRASH CUSHION MODULE

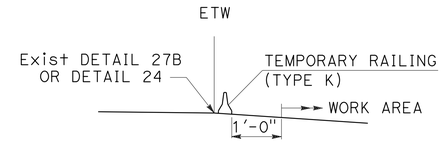

SECTION A-A

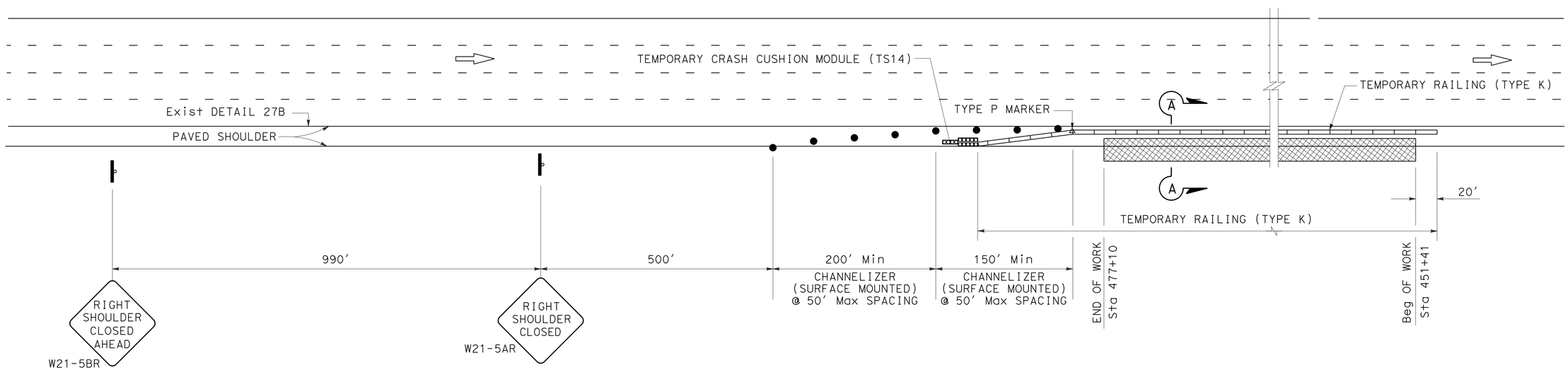

TRAFFIC HANDLING QUANTITIES

SHEET No.	CHANNELIZER (SURFACE MOUNTED)	Temp CRASH CUSHION MODULE	Temp RAILING (TYPE K)	(N) TYPE P MARKER	CONSTRUCTION AREA SIGNS 48" X 48" W21-5AR	CONSTRUCTION AREA SIGNS 48" X 48" W21-5BR
	EA	EA	LF	EA	EA	EA
TH-1	8	14	2720	1	1	1
TOTAL	8	14	2720	1	1	1

(N) - NOT A SEPARATE PAY ITEM, FOR INFORMATION ONLY

TRAFFIC HANDLING PLAN

NO SCALE

APPROVED FOR TRAFFIC HANDLING WORK ONLY

TH-1

REVISED BY | DATE REVISED

ESTHER M. KIM | MOHAMMED CHOWDHURY

CALCULATED-DESIGNED BY | CHECKED BY

FUNCTIONAL SUPERVISOR: MOHAMMED CHOWDHURY

STATE OF CALIFORNIA - DEPARTMENT OF TRANSPORTATION

Caltrans® TRAFFIC DESIGN

LAST REVISION 00-00-00 | DATE PLOTTED => 24-SEP-2015 | TIME PLOTTED => 14:38

Dist	COUNTY	ROUTE	POST MILES TOTAL PROJECT	SHEET No.	TOTAL SHEETS
07	LA	101	8.5/9.4	16	62

REGISTERED CIVIL ENGINEER 12-22-14 DATE

6-29-15
PLANS APPROVAL DATE

REGISTERED PROFESSIONAL ENGINEER SHANGJIA HORN No. 51846 Exp. 6/30/16 CIVIL STATE OF CALIFORNIA

THE STATE OF CALIFORNIA OR ITS OFFICERS OR AGENTS SHALL NOT BE RESPONSIBLE FOR THE ACCURACY OR COMPLETENESS OF SCANNED COPIES OF THIS PLAN SHEET.

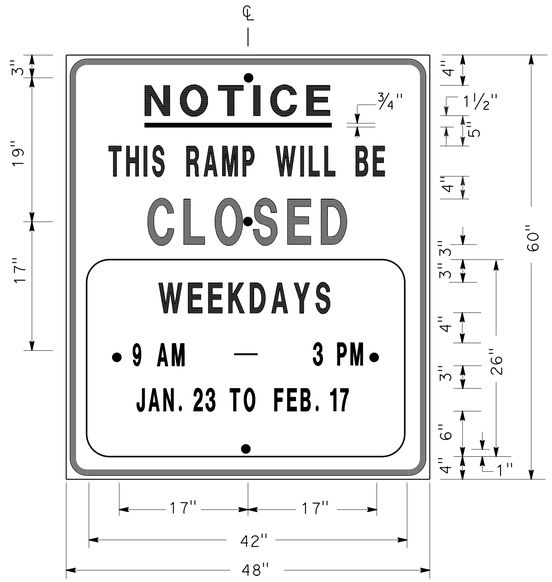

SIGN SP-1

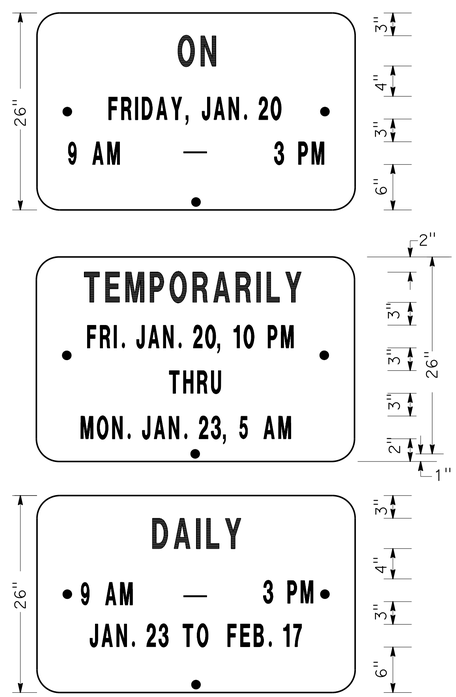

ALTERNATE OVERLAY PANELS (TYPICAL)

SPECIAL ADVANCE NOTICE PUBLICITY SIGN

NOTES: SIGN SP-1

1. LETTERS AND BORDER MUST BE BLACK ON REFLECTORIZED ORANGE BACKGROUND.
2. BOLT HOLES MUST BE 3/8" DIAMETER.
3. BASE MATERIAL MUST BE ALUMINUM (MINIMUM 0.06").
4. SIGNS MUST BE MOUNTED WITH BOTTOMS OF SIGNS A MINIMUM OF 7' ABOVE GROUND.

SIZE	BORDER WIDTH	MARGIN WIDTH	LETTER SIZE					CORNER RADIUS
			LINE 1	LINE 2*	LINE 3	LINE 4	LINE 5, 6, & 7*	
48"x60"	1 1/4"	3/4"	4E	4D	6E	4D		3"
42"x26"	OVERLAY						3D	1 1/2"
* CONDENSED SPACING IF NECESSARY								

SIGN SP-4

NOTES: SIGN SP-4

1. LETTERS - 6" SERIES C.
2. LETTERS AND BORDER MUST BE BLACK ON REFLECTORIZED WHITE BACKGROUND.
3. BOLT HOLES MUST BE 3/8" DIAMETER.
4. BASE MATERIAL MUST BE ALUMINUM (MINIMUM 0.06").
5. SIGNS MUST BE PLACED AT RAMP ENTRANCES IN ADDITION TO SIGNS POSTED IN ACCORDANCE WITH REVISED STANDARD PLAN RSP T14.

SPECIAL SIGN FOR ENTRANCE RAMP CLOSURES

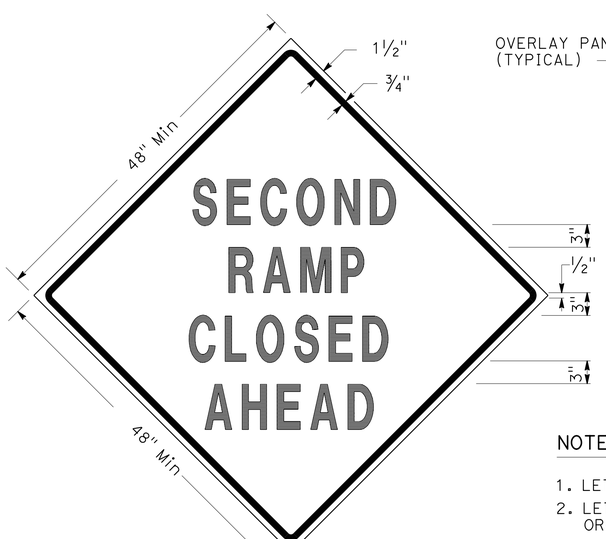

SIGN SP-3

SIGN SP-5

NOTES: SIGNS SP-3 & SP-5

1. LETTERS - 6" SERIES D.
2. LETTERS AND BORDER MUST BE BLACK ON REFLECTORIZED ORANGE BACKGROUND.
3. BOLT HOLES MUST BE 3/8" DIAMETER.
4. BASE MATERIAL MUST BE ALUMINUM (MINIMUM 0.06").
5. SIGNS MUST BE MOUNTED WITH BOTTOMS OF SIGNS A MINIMUM OF 7' ABOVE GROUND.
6. SIGN SP-5 MUST BE USED IF THE OFF-RAMP TO BE CLOSED FOLLOWS A FREEWAY OFF-CONNECTOR.

SPECIAL SIGNS FOR EXIT RAMP CLOSURES

TRAFFIC HANDLING DETAILS
TRAFFIC CONTROL SYSTEM FOR RAMP CLOSURES, DETOUR SIGNS, AND MISCELLANEOUS DETAILS
SHEET 1 OF 2

NO SCALE

THD-1

STATE OF CALIFORNIA - DEPARTMENT OF TRANSPORTATION
Caltrans DTM

FUNCTIONAL SUPERVISOR: SAM ESQUENAZI
CALCULATED-DESIGNED BY: ALBERT K YU
CHECKED BY: JOCELYN C CHIANG
REVISED BY: JC
DATE REVISED: 2/14

LAST REVISION 00-00-00
DATE PLOTTED => 24-SEP-2015
TIME PLOTTED => 14:38

Dist	COUNTY	ROUTE	POST MILES TOTAL PROJECT	SHEET No.	TOTAL SHEETS
07	LA	101	8.5/9.4	17	62

REGISTERED CIVIL ENGINEER 12-22-14 DATE

6-29-15
PLANS APPROVAL DATE

REGISTERED PROFESSIONAL ENGINEER SHANGJIA HORN No. 51846 Exp. 6/30/16 CIVIL STATE OF CALIFORNIA

THE STATE OF CALIFORNIA OR ITS OFFICERS OR AGENTS SHALL NOT BE RESPONSIBLE FOR THE ACCURACY OR COMPLETENESS OF SCANNED COPIES OF THIS PLAN SHEET.

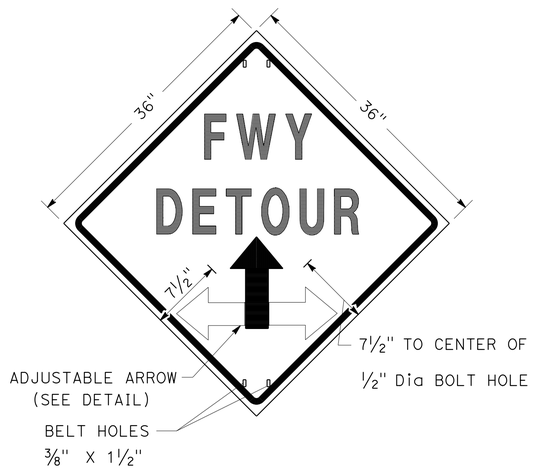

SIGN SP-2

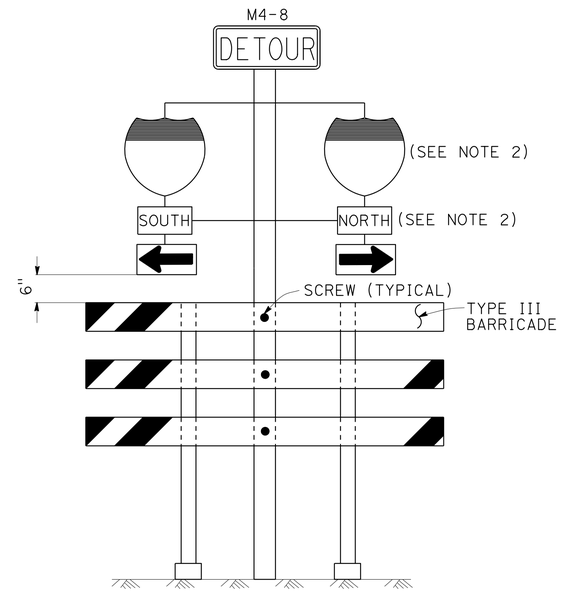

SIGN SP-6 (SEE NOTE 1)

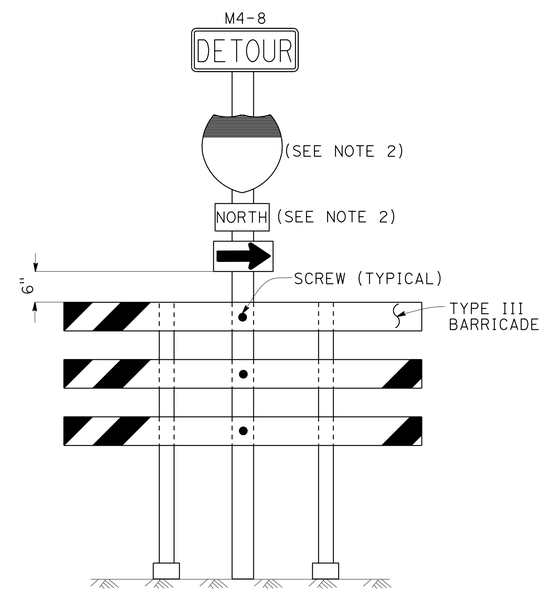

SIGN SP-7 (SEE NOTE 1)

NOTES: SIGN SP-2

1. LETTERS - 6" SERIES E.
2. LETTERS, BORDER AND ARROW - BLACK ON RETROREFLECTORIZED ORANGE BACKGROUND.
3. BASE MATERIAL FOR SIGNS AND ARROWS MUST BE ALUMINUM (MINIMUM 0.06").
4. BELTS (LUGGAGE STRAPS) MUST BE 1" WIDE BY 48" LONG, MADE OF COTTON OR POLYPROPYLENE WEB MATERIAL.
5. SIGNS MUST BE MOUNTED WITH BOTTOMS OF SIGNS A MINIMUM OF 7' ABOVE GROUND EXCEPT AS OTHERWISE SHOWN ON OTHER TRAFFIC HANDLING DETAILS PLANS.

NOTES: SIGNS SP-6 & SP-7

1. IN LIEU OF PLACING SIGNS ON TYPE III BARRICADES, SIGNS, INCLUDING POSTS, MAY BE PLACED INTO THE GROUND OR FASTENED ONTO ELECTROLIERS.
2. USE APPROPRIATE ROUTE MARKER [G26-2(CA), G27-2(CA), G28-2(CA)] AND CARDINAL DIRECTION [NORTH (M3-1), SOUTH (M3-3), EAST (M3-2), WEST (M3-4)].

SPECIAL PORTABLE FREEWAY DETOUR SIGNS

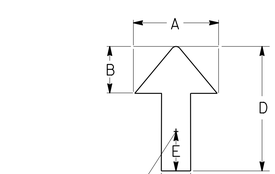

DIMENSIONS				
A	B	C	D	E
6"	3"	2"	8"	1"

ADJUSTABLE ARROW DETAIL

ABBREVIATION

(CA) CALIFORNIA CODE

TRAFFIC HANDLING DETAILS

TRAFFIC CONTROL SYSTEM FOR RAMP CLOSURES, DETOUR SIGNS, AND MISCELLANEOUS DETAILS

SHEET 2 OF 2

NO SCALE

THD-2

STATE OF CALIFORNIA - DEPARTMENT OF TRANSPORTATION
Caltrans® DTM

FUNCTIONAL SUPERVISOR: SAM ESQUENAZI
CALCULATED-DESIGNED BY: ALBERT K YU
CHECKED BY: JOCELYN C CHIANG
REVISED BY: JC
DATE REVISED: 2/14

LAST REVISION: DATE PLOTTED => 24-SEP-2015 TIME PLOTTED => 14:38
00-00-00

Dist	COUNTY	ROUTE	POST MILES TOTAL PROJECT	SHEET No.	TOTAL SHEETS
07	LA	101	8.5/9.4	18	62

12-23-14
REGISTERED CIVIL ENGINEER DATE

6-29-15
PLANS APPROVAL DATE

THE STATE OF CALIFORNIA OR ITS OFFICERS OR AGENTS SHALL NOT BE RESPONSIBLE FOR THE ACCURACY OR COMPLETENESS OF SCANNED COPIES OF THIS PLAN SHEET.

REGISTERED PROFESSIONAL ENGINEER SHANGJIA HORN No. 31848 Exp. 6/30/15 CIVIL STATE OF CALIFORNIA

LEGEND

- SIGN SP-2
- AND/OR — DESIGNATED DETOUR ROUTE
- DETOUR DIRECTION
- CONTROLLED INTERSECTION

NOTES:

1. SP-2 SIGNS MAY BE STRAPPED ON EXISTING ELECTROLIER, SIGNAL POST OR SIGN POST.
2. SP-2 SIGNS MUST NOT BE INSTALLED ON BARRICADES EXCEPT AS OTHERWISE SHOWN.
3. SIGN LOCATIONS ARE APPROXIMATE. EXACT LOCATIONS WILL BE DETERMINED BY THE ENGINEER.
4. SP-2 SIGNS MUST BE POSTED AT EACH CONTROLLED INTERSECTION (EXCEPT AT COMMERCIAL PROPERTY, RESIDENTIAL COMPLEX OR T-INTERSECTION FROM ONE-WAY STREET) ALONG THE DESIGNATED DETOUR ROUTE.
5. UNLESS OTHERWISE SHOWN ON OTHER THD PLANS, WHEN CONTROLLED INTERSECTIONS ALONG THE DESIGNATED DETOUR ROUTE ARE CLOSELY SPACED, PLACE SP-2 SIGNS AT CONTROLLED INTERSECTIONS AT A DISTANCE NOT TO EXCEED 1/4 MILE FROM THE PRECEDING DETOUR SIGN.
6. EXCEPT AS OTHERWISE SHOWN ON OTHER PLANS OR SPECIFIED IN THE SPECIAL PROVISIONS, SP-2 SIGNS MUST BE PLACED AS SHOWN ON THIS PLAN.

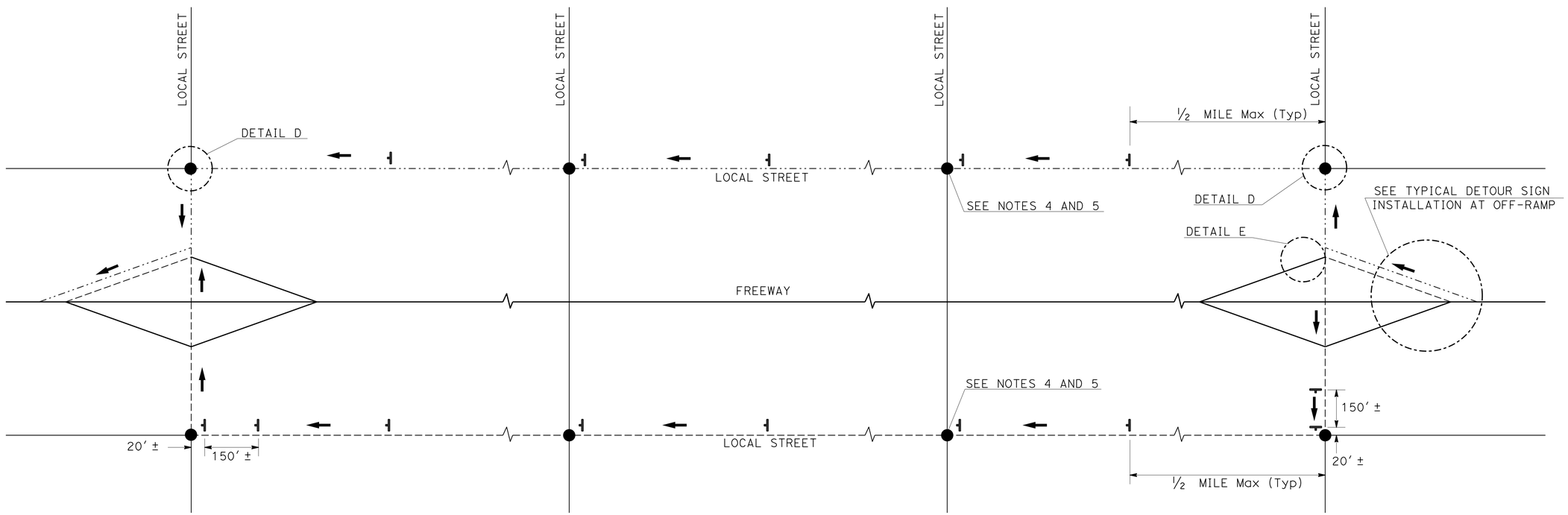

TYPICAL DETOUR SIGN INSTALLATION ALONG DESIGNATED DETOUR ROUTE

TRAFFIC HANDLING DETAILS

TRAFFIC CONTROL SYSTEM FOR DETOUR SIGN INSTALLATION ALONG DESIGNATED DETOUR ROUTE

SHEET 1 OF 2

NO SCALE

THD-3

STATE OF CALIFORNIA - DEPARTMENT OF TRANSPORTATION
Caltrans DTM

FUNCTIONAL SUPERVISOR: SAM ESQUENAZI
CALCULATED-DESIGNED BY: ALBERT K YU
CHECKED BY: JOCELYN C CHIANG
REVISED BY: JC
DATE REVISED: 2/14

LAST REVISION 00-00-00
DATE PLOTTED => 24-SEP-2015
TIME PLOTTED => 14:38

Dist	COUNTY	ROUTE	POST MILES TOTAL PROJECT	SHEET No.	TOTAL SHEETS
07	LA	101	8.5/9.4	19	62

REGISTERED CIVIL ENGINEER 12-23-14 DATE

6-29-15
PLANS APPROVAL DATE

REGISTERED PROFESSIONAL ENGINEER SHANGJIA HORN No. 51846 Exp. 6/30/16 CIVIL STATE OF CALIFORNIA

THE STATE OF CALIFORNIA OR ITS OFFICERS OR AGENTS SHALL NOT BE RESPONSIBLE FOR THE ACCURACY OR COMPLETENESS OF SCANNED COPIES OF THIS PLAN SHEET.

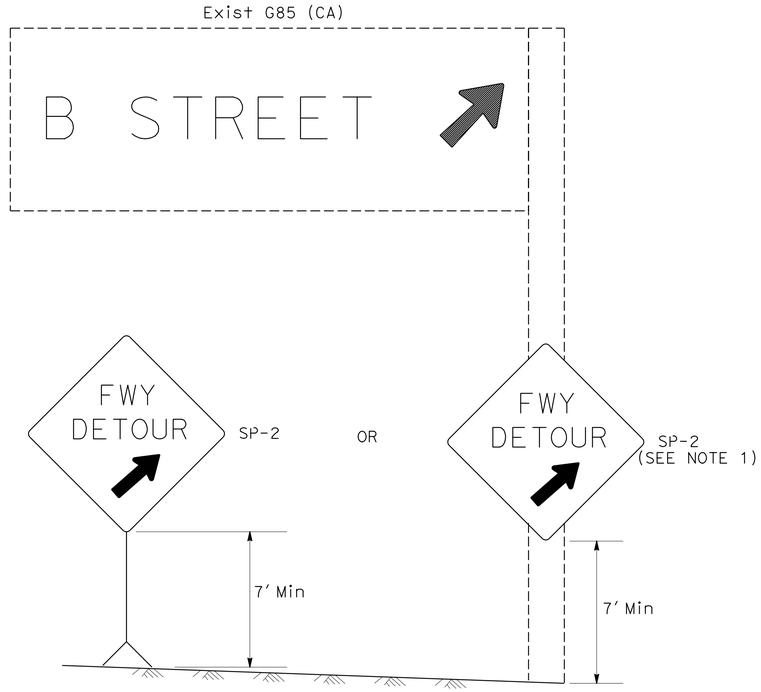

DETAIL A (SEE NOTE 3)

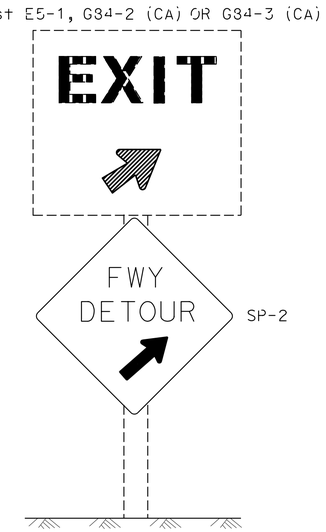

DETAIL B (SEE NOTE 3)

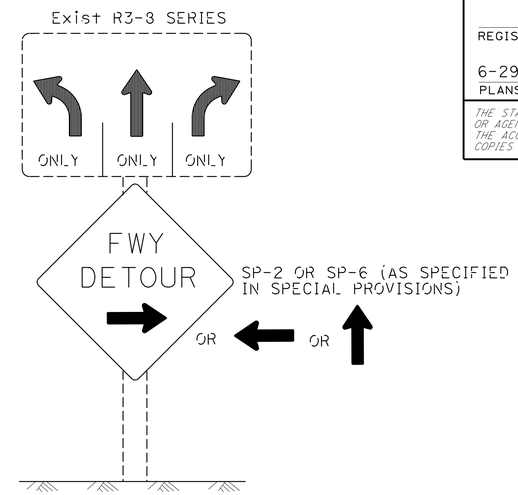

DETAIL C (SEE NOTES 4, 5, AND 6)

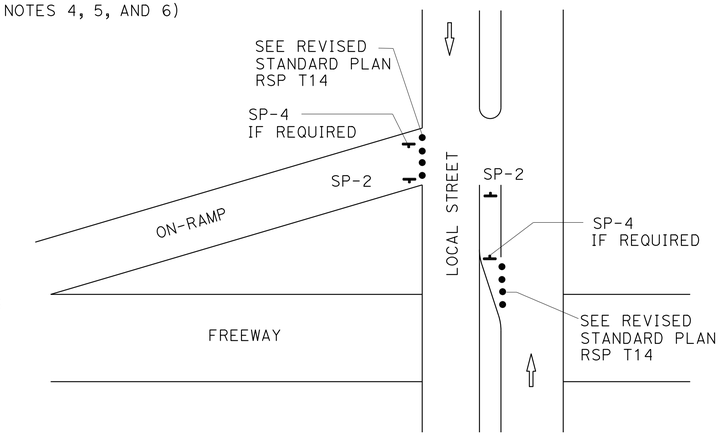

DETAIL E

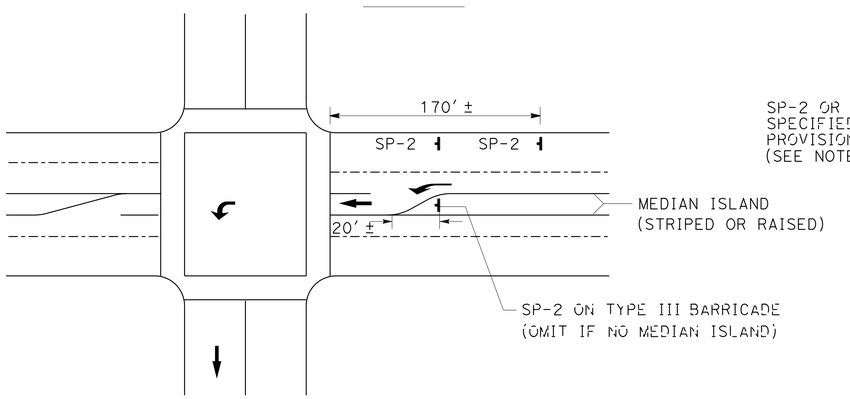

DETAIL D

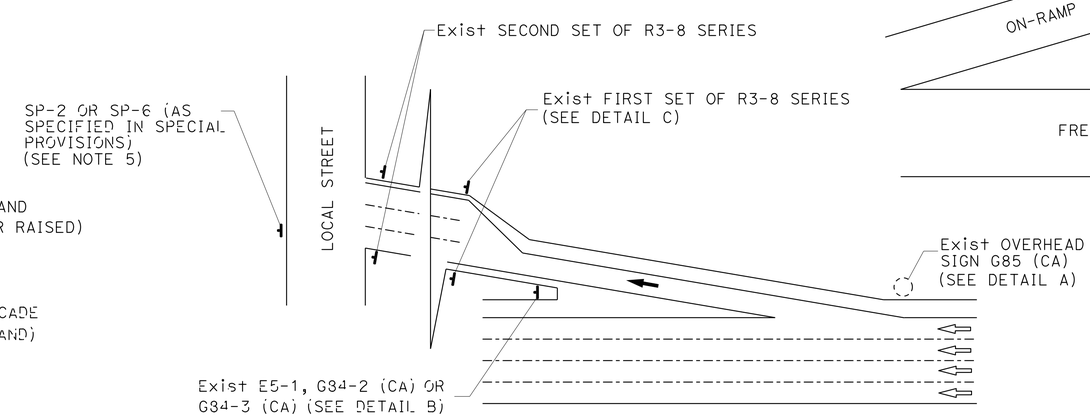

TYPICAL DETOUR SIGN INSTALLATION AT OFF-RAMP

LEGEND

- • TRAFFIC CONE
- TEMPORARY TRAFFIC CONTROL SIGN
- → DETOUR DIRECTION
- ◌ EXISTING OVERHEAD SIGN

NOTES: SIGN SP-2

1. SP-2 SIGNS MAY BE STRAPPED ON EXISTING ELECTROLIER, SIGNAL POST OR SIGN POST.
2. SP-2 SIGNS MUST NOT BE INSTALLED ON BARRICADES EXCEPT AS OTHERWISE SHOWN.
3. OMIT DETAILS A AND B FOR FULL FREEWAY CLOSURES.
4. SEE TRAFFIC HANDLING DETAILS-TRAFFIC CONTROL SYSTEM FOR RAMP CLOSURES, DETOUR SIGNS, AND MISCELLANEOUS DETAILS PLAN SHEET 2 OF 2 FOR SP-6 SIGN DETAILS.
5. IF R3-8 SERIES SIGNS ARE NOT PRESENT AT THE OFF-RAMP, SP-2 OR SP-6 SIGNS MUST BE FASTENED ONTO EXISTING ELECTROLIER, SIGNAL POST OR SIGN POST.
6. EXCEPT FOR DETAILS A & B, OMIT SP-2 SIGNS IF RAMP HAS MANDATORY SINGLE MOVE.

SIGN CODE LEGEND

XXYY-Y: FEDERAL SIGN CODE PER MANUAL ON UNIFORM TRAFFIC CONTROL DEVICES (MUTCD)

XXYY-Y (CA): CALIFORNIA SIGN CODE PER CALIFORNIA MUTCD

TRAFFIC HANDLING DETAILS
TRAFFIC CONTROL SYSTEM FOR DETOUR SIGN INSTALLATION ALONG DESIGNATED DETOUR ROUTE SHEET 2 OF 2

NO SCALE

THD-4

STATE OF CALIFORNIA - DEPARTMENT OF TRANSPORTATION
Caltrans DTM

FUNCTIONAL SUPERVISOR: SAM ESQUENAZI
CALCULATED-DESIGNED BY: ALBERT K YU
CHECKED BY: JOCELYN C CHIANG
REVISED BY: JC
DATE REVISED: 2/14

LAST REVISION 00-00-00 DATE PLOTTED => 24-SEP-2015 TIME PLOTTED => 14:38

Dist	COUNTY	ROUTE	POST MILES TOTAL PROJECT	SHEET No.	TOTAL SHEETS
07	LA	101	8.5/9.4	20	62

REGISTERED CIVIL ENGINEER 12-23-14 DATE

6-29-15
PLANS APPROVAL DATE

REGISTERED PROFESSIONAL ENGINEER SHANGJIA HORN No. 51846 Exp 6/30/16 CIVIL STATE OF CALIFORNIA

THE STATE OF CALIFORNIA OR ITS OFFICERS OR AGENTS SHALL NOT BE RESPONSIBLE FOR THE ACCURACY OR COMPLETENESS OF SCANNED COPIES OF THIS PLAN SHEET.

NOTES:

1. LANE CLOSURES MUST NOT BE PLACED ON CREST VERTICAL CURVES OR ON HORIZONTAL CURVES.
2. PCMS MUST BE ACTIVATED PRIOR TO TRAFFIC CONTROL ACTIVITIES ON THE LANE.
3. A MINIMUM SIGHT DISTANCE OF 1500′ MUST BE PROVIDED IN ADVANCE OF PCMS.
4. VEHICLE-MOUNTED SIGN PANELS MUST BE TYPE III OR IV RETROREFLECTORIZED SHEETING, BLACK ON WHITE OR BLACK ON ORANGE WITH 8" MINIMUM SERIES D LETTERS PER CALTRANS SIGN SPECIFICATIONS.

LEGEND

V1, V2	SHADOW VEHICLES
V3	WORK/APPLICATION VEHICLE
	PCMS
	TEMPORARY TRAFFIC CONTROL SIGN
	FLASHING ARROW SIGN (FAS)

ABBREVIATIONS

IAV	IMPACT ATTENUATOR VEHICLE
(CA)	CALIFORNIA CODE

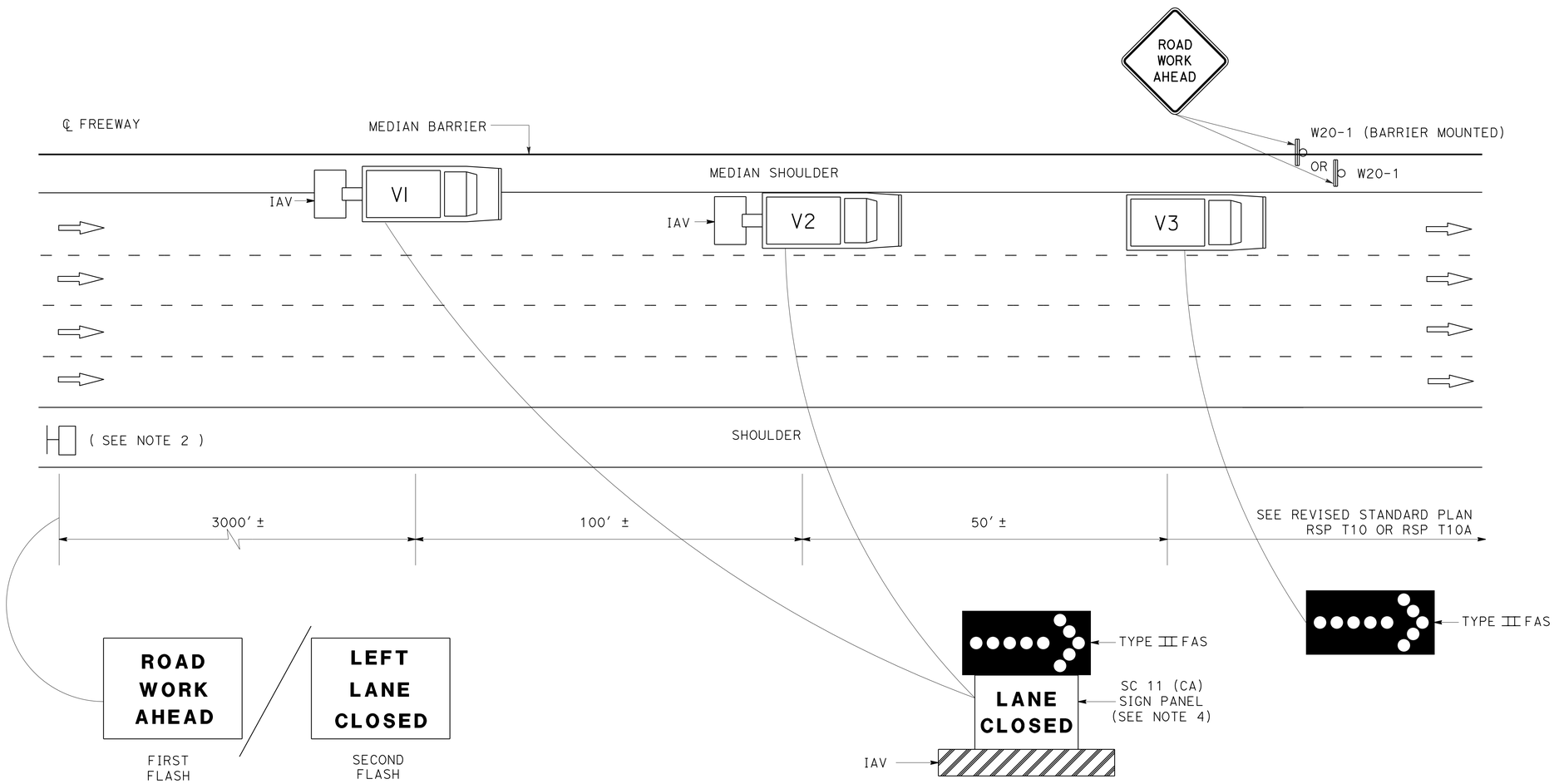

PCMS OR TRUCK MOUNTED CMS MESSAGE

TRAFFIC HANDLING DETAILS
TRAFFIC CONTROL SYSTEM
FOR MEDIAN SHOULDERS LESS THAN 8 FEET

NO SCALE

THD-5

STATE OF CALIFORNIA - DEPARTMENT OF TRANSPORTATION
Caltrans
DTM
FUNCTIONAL SUPERVISOR: SAM ESQUENAZI
CALCULATED-DESIGNED BY: JOCELYN C CHIANG
CHECKED BY: ALBERT K YU
REVISED BY: JC
DATE REVISED: 2/14

LAST REVISION 00-00-00
DATE PLOTTED => 24-SEP-2015
TIME PLOTTED => 14:38

Dist	COUNTY	ROUTE	POST MILES TOTAL PROJECT	SHEET No.	TOTAL SHEETS
07	LA	101	8.5/9.4	21	62

REGISTERED CIVIL ENGINEER 2/25/15 DATE

6-29-15
PLANS APPROVAL DATE

REGISTERED PROFESSIONAL ENGINEER ESTHER M. KIM No. C48363 Exp. 6/30/16 CIVIL STATE OF CALIFORNIA

THE STATE OF CALIFORNIA OR ITS OFFICERS OR AGENTS SHALL NOT BE RESPONSIBLE FOR THE ACCURACY OR COMPLETENESS OF SCANNED COPIES OF THIS PLAN SHEET.

NOTES:

1. FOR SIGN DETAILS, SEE SD-1 SHEET.
2. FOR SIGN AND FLASHING BEACON MOUNTED ON BRIDGE DETAILS, SEE SDS-1 TO SDS-4 SHEETS.
3. FOR FLASHING BEACON, SEE ELECTRICAL PLANS.

LEGEND:

(RSP) REMOVE SIGN PANEL

(ISB) INSTALL SIGN STRUCTURE (BRIDGE MOUNTED WITHOUT WALKWAY)

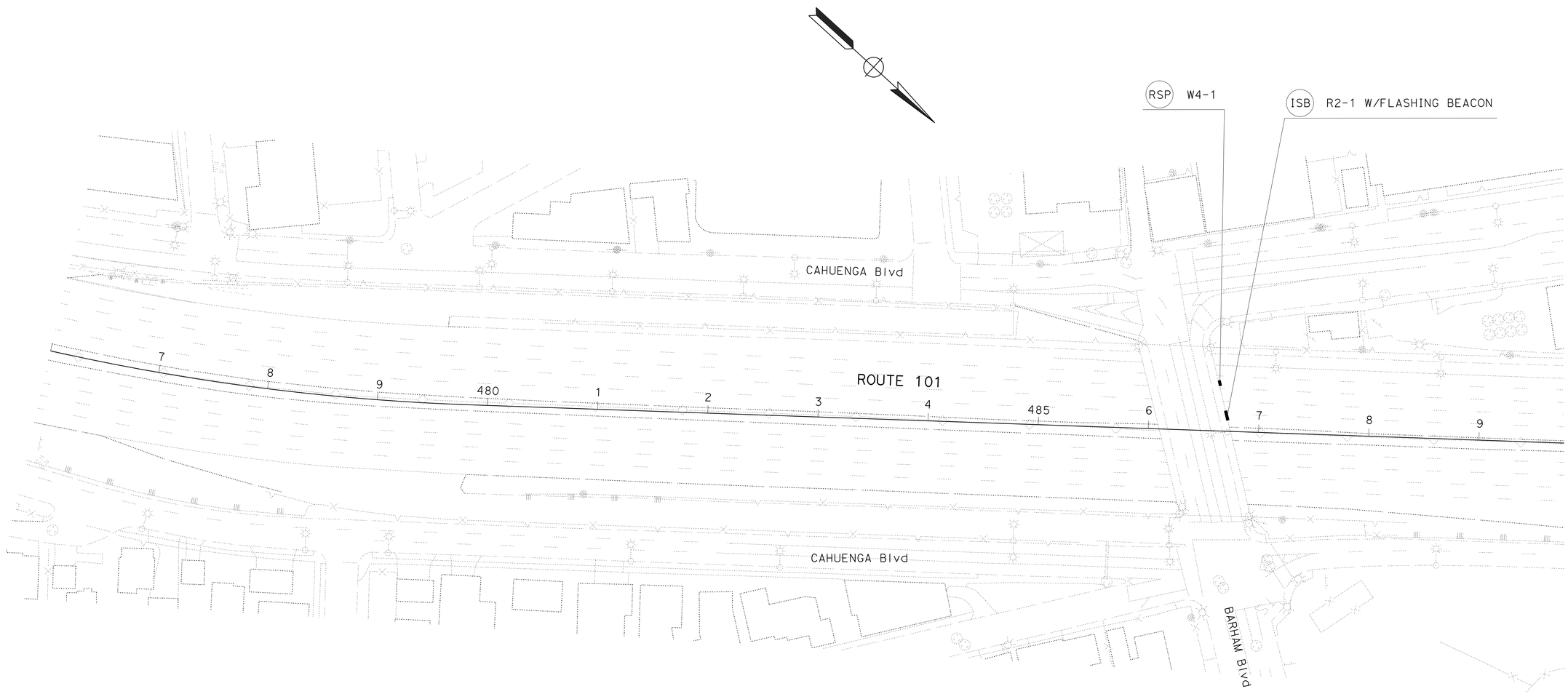

SIGN PLAN

SCALE: 1"=50'

APPROVED FOR SIGN WORK ONLY

S-1

STATE OF CALIFORNIA - DEPARTMENT OF TRANSPORTATION
Caltrans
TRAFFIC DESIGN

FUNCTIONAL SUPERVISOR: MOHAMMED CHOWDHURY

CALCULATED-DESIGNED BY: ESTHER M. KIM
CHECKED BY: MOHAMMED CHOWDHURY

REVISED BY
DATE REVISED

LAST REVISION 00-00-00
DATE PLOTTED => 24-SEP-2015
TIME PLOTTED => 14:38

Dist	COUNTY	ROUTE	POST MILES TOTAL PROJECT	SHEET No.	TOTAL SHEETS
07	LA	101	8.5/9.4	22	62

REGISTERED CIVIL ENGINEER 2/25/15 DATE

6-29-15
PLANS APPROVAL DATE

REGISTERED PROFESSIONAL ENGINEER ESTHER M. KIM No. C48363 Exp. 6/30/16 CIVIL STATE OF CALIFORNIA

THE STATE OF CALIFORNIA OR ITS OFFICERS OR AGENTS SHALL NOT BE RESPONSIBLE FOR THE ACCURACY OR COMPLETENESS OF SCANNED COPIES OF THIS PLAN SHEET.

R2-1

3.0" RADIUS, 1.3" BORDER, 0.8" Indent, BLACK ON WHITE
(SPEED) WHITE E 80% SPACING; (LIMIT) WHITE E; (55) WHITE E Mod 85% SPACING;

SHEET No.	SIGN CODE	PANEL SIZE (L X D)	SINGLE FACED	SIGN FACING MATERIAL					FURNISH	FURNISH SIGN STRUCTURE (BRIDGE MOUNTED WITHOUT WALKWAY)	INSTALL SIGN STRUCTURE (BRIDGE MOUNTED WITHOUT WALKWAY)	REMOVE SIGN PANEL
				BACKGROUND		LEGEND		GRAFFITI FILM	SINGLE SHEET ALUMINUM SIGN			
				SHEETING COLOR	RETROREFLECTIVE ASTM TYPE	SHEETING COLOR	RETROREFLECTIVE ASTM TYPE	PREMIUM	(0.063" - FRAMED)			
		INCH x INCH							SQFT	LB	LB	EA
S-1	R2-1	60 x 75	●	WHITE	XI	BLACK		●	31.25	318	318	
	W4-1											1
TOTAL									31.25	318	318	1

SIGN DETAILS

NO SCALE

SD-1

STATE OF CALIFORNIA - DEPARTMENT OF TRANSPORTATION
Caltrans® TRAFFIC DESIGN

FUNCTIONAL SUPERVISOR: MOHAMMED CHOWDHURY
CALCULATED-DESIGNED BY: ESTHER M. KIM
CHECKED BY: MOHAMMED CHOWDHURY
REVISED BY
DATE REVISED

LAST REVISION 00-00-00
DATE PLOTTED => 24-SEP-2015
TIME PLOTTED => 14:38

Dist	COUNTY	ROUTE	POST MILES TOTAL PROJECT	SHEET No.	TOTAL SHEETS
07	LA	101	8.5/9.4	23	62

REGISTERED CIVIL ENGINEER DATE 2/25/15

6-29-15
PLANS APPROVAL DATE

REGISTERED PROFESSIONAL ENGINEER ESTHER M. KIM No. C48363 Exp. 6/30/16 CIVIL STATE OF CALIFORNIA

THE STATE OF CALIFORNIA OR ITS OFFICERS OR AGENTS SHALL NOT BE RESPONSIBLE FOR THE ACCURACY OR COMPLETENESS OF SCANNED COPIES OF THIS PLAN SHEET.

PAVEMENT DELINEATION QUANTITIES

LOCATION RTE-101 SOUTHBOUND	REMOVE THERMOPLASTIC TRAFFIC STRIPE	4" WHITE THERMOPLASTIC TRAFFIC STRIPE
	Det 27B	Det 27B
	FT	FT
STA 450+00 TO 462+00	1,200	1,200
STA 462+00 TO 476+00	1,400	1,400
STA 476+00 TO 478+00	200	200
TOTAL	2,800	2,800

ROADWAY QUANTITIES

SHEET No.	ROADWAY EXCAVATION	ROADWAY EXCAVATION (TYPE Z-2) (AERIALLY DEPOSITED LEAD)	ROADWAY EXCAVATION (TYPE Z-3) (AERIALLY DEPOSITED LEAD)	MINOR CONCRETE (CURB)	HOT MIX ASPHALT (TYPE A)	LEAN CONCRETE BASE	CONCRETE BARRIER (TYPE 60C)	CONCRETE BARRIER (TYPE 60C Mod)	CONCRETE BARRIER (TYPE 60D Mod)	CHAIN LINK RAILING (Mod)	MISCELLANEOUS METAL	4' CHAIN LINK GATE (TYPE CL-6)	REMOVE GUARDRAIL	REMOVE ASPHALT CONCRETE DIKE	REMOVE CONCRETE CURB	REMOVE CHAIN LINK FENCE	TREATED WOOD WASTE	TEMPORARY DRAINAGE INLET PROTECTION
	CY	CY	CY	LF	TON	CY	LF	LF	LF	LF	LB	EA	LF	LF	LF	LF	LB	EA
L-1		197					729	270	42	1,017	6,138	1		1,059		1,017		1
L-2	145	195	51		128	110	1,016	360		1,400	8,184		75	1,400		1,400	910	
L-3	61			10	45	41	61	31		35	1,258	1	63	100	10	35	770	1
TOTAL	206	392	51	10	173	151	1,806	661	42	2,452	15,580	2	138	2,559	10	2,452	1,680	2

SUMMARY OF QUANTITIES

Q-1

STATE OF CALIFORNIA - DEPARTMENT OF TRANSPORTATION
Caltrans TRAFFIC DESIGN

FUNCTIONAL SUPERVISOR: MOHAMMED CHOWDHURY
CALCULATED-DESIGNED BY: ESTHER M. KIM
CHECKED BY: MOHAMMED CHOWDHURY
REVISED BY
DATE REVISED

LAST REVISION 00-00-00
DATE PLOTTED => 24-SEP-2015
TIME PLOTTED => 14:38

Dist	COUNTY	ROUTE	POST MILES TOTAL PROJECT	SHEET No.	TOTAL SHEETS
07	LA	101	8.5/9.4	24	62

REGISTERED ELECTRICAL ENGINEER — DATE: 3/2/15

PLANS APPROVAL DATE: 6-29-15

REGISTERED PROFESSIONAL ENGINEER — OHANNES ANSERLIAN — No. E16682 — Exp. 6/30/16 — ELECTRICAL — STATE OF CALIFORNIA

THE STATE OF CALIFORNIA OR ITS OFFICERS OR AGENTS SHALL NOT BE RESPONSIBLE FOR THE ACCURACY OR COMPLETENESS OF SCANNED COPIES OF THIS PLAN SHEET.

NOTES: (THIS SHEET ONLY)

1. FOR ACCURATE RIGHT OF WAY DATA, CONTACT RIGHT OF WAY ENGINEERING AT THE DISTRICT OFFICE.
2. REFER TO SHEETS U1-U3 FOR UTILITY INFORMATION.
3. FOR WIRING DIAGRAM, SEE SHEET E-5.
4. ALL NEW PULL BOXES MUST BE TRAFFIC RATED AND TAMPER RESISTANT, EXCEPT No. 9, AND No. 9A, UNLESS OTHERWISE NOTED.
5. INSTALL TYPE A9 SECURITY LID ON TYPE 9 OR 9A PULL BOXES.

SYMBOL: (SHEETS E-1 AND E-2)

INSTALL MODIFIED TYPE 21 DECORATIVE LIGHTING POLE WITH 310 W HPS Lum.
SEE STRUCTURE PLANS ON STRUCTURE PLAN SHEET SES-1 AND RSP ES-6E FOR DETAILS.

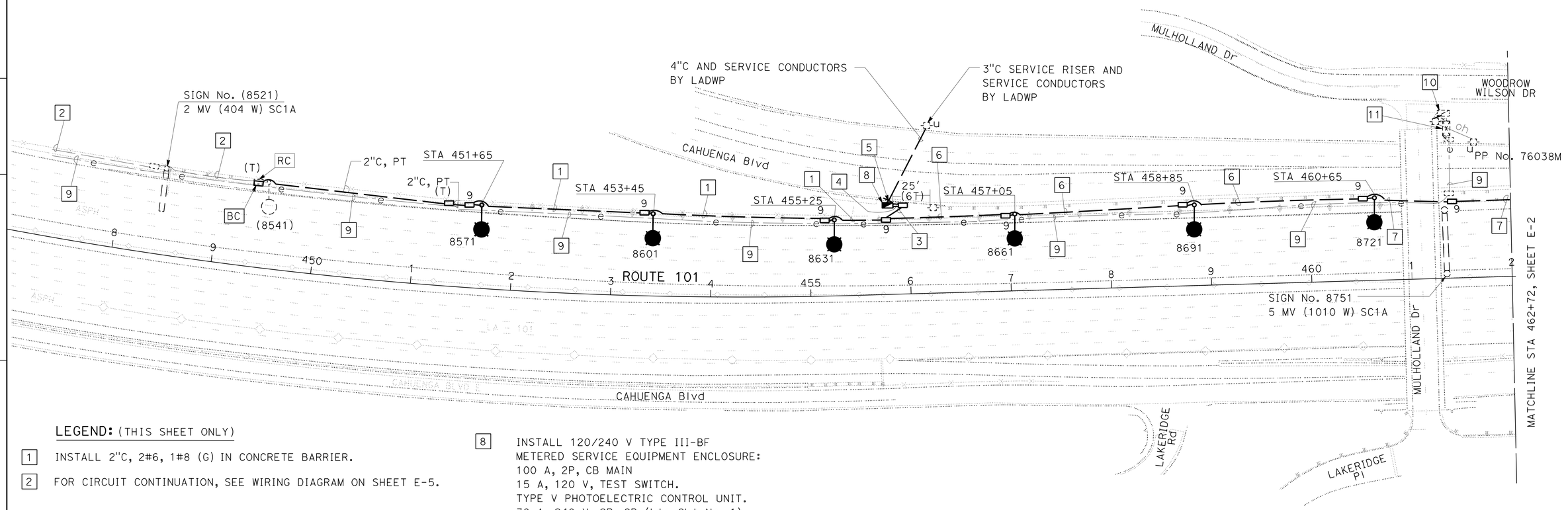

LEGEND: (THIS SHEET ONLY)

1. INSTALL 2"C, 2#6, 1#8 (G) IN CONCRETE BARRIER.
2. FOR CIRCUIT CONTINUATION, SEE WIRING DIAGRAM ON SHEET E-5.
3. INSTALL 2"C, 2#6, 2#4, 1#8 (G).
4. INSTALL 2-2"C, 2#6, 2#4, 1#8 (G).
5. INSTALL 4"C FROM BASE AND CB TO LADWP's 4"C.
6. INSTALL 2"C, 2#6, 2#4, 1#8 (G) IN CONCRETE BARRIER.
7. INSTALL 2"C, 2#4, 1#8 (G) IN CONCRETE BARRIER.
8. INSTALL 120/240 V TYPE III-BF METERED SERVICE EQUIPMENT ENCLOSURE:
   100 A, 2P, CB MAIN
   15 A, 120 V, TEST SWITCH.
   TYPE V PHOTOELECTRIC CONTROL UNIT.
   30 A, 240 V, 2P, CB (Ltg Ckt No. 1)
   30 A, 240 V, 2P, CB (Ltg Ckt No. 2)
   CTID: 07-053-101-R-008.850M
   ADDRESS: 2770 CAHUENGA Blvd West 90068
9. PROTECT EXISTING 2"C AND 2#14 DLC's FOR EXISTING EMS SIGN.
10. EXISTING 120 V TYPE 'A' METERED SERVICE EQUIPMENT ENCLOSURE FOR 170 CONTROLLER ASSEMBLY AND BRIDGE MOUNTED EMS SIGN.
11. EXISTING 170 CONTROLLER ASSEMBLY FOR BRIDGE MOUNTED EMS SIGN.

MODIFY LIGHTING

SCALE: 1"=50'

APPROVED FOR ELECTRICAL WORK ONLY

E-1

STATE OF CALIFORNIA - DEPARTMENT OF TRANSPORTATION
Caltrans® TRAFFIC DESIGN

FUNCTIONAL SUPERVISOR: OSWALD ELIZONDO
CALCULATED-DESIGNED BY: LIEN VO
CHECKED BY: OHANNES ANSERLIAN
REVISED BY / DATE REVISED

LAST REVISION 05-1215
DATE PLOTTED => 24-SEP-2015
TIME PLOTTED => 14:38

Dist	COUNTY	ROUTE	POST MILES TOTAL PROJECT	SHEET No.	TOTAL SHEETS
07	LA	101	8.5/9.4	25	62

REGISTERED ELECTRICAL ENGINEER 3/2/15 DATE

6-29-15
PLANS APPROVAL DATE

REGISTERED PROFESSIONAL ENGINEER OHANNES ANSERLIAN No. E16682 Exp. 6/30/16 ELECTRICAL STATE OF CALIFORNIA

THE STATE OF CALIFORNIA OR ITS OFFICERS OR AGENTS SHALL NOT BE RESPONSIBLE FOR THE ACCURACY OR COMPLETENESS OF SCANNED COPIES OF THIS PLAN SHEET.

NOTES: (THIS SHEET ONLY)

1. FOR ACCURATE RIGHT OF WAY DATA, CONTACT RIGHT OF WAY ENGINEERING AT THE DISTRICT OFFICE.
2. EXISTING UTILITY FACILITIES ARE NOT INCLUDED ON THESE PLANS.
3. FOR WIRING DIAGRAM, SEE SHEET E-5.
4. ALL NEW PULL BOXES MUST BE TRAFFIC RATED AND TAMPER RESISTANT, EXCEPT No. 9, AND No. 9A, UNLESS OTHERWISE NOTED.
5. INSTALL TYPE A9 SECURITY LID ON TYPE 9 OR 9A PULL BOXES.

LEGEND: (THIS SHEET ONLY)

[1] INSTALL 2"C, 2#4, 1#8 (G) IN CONCRETE BARRIER.

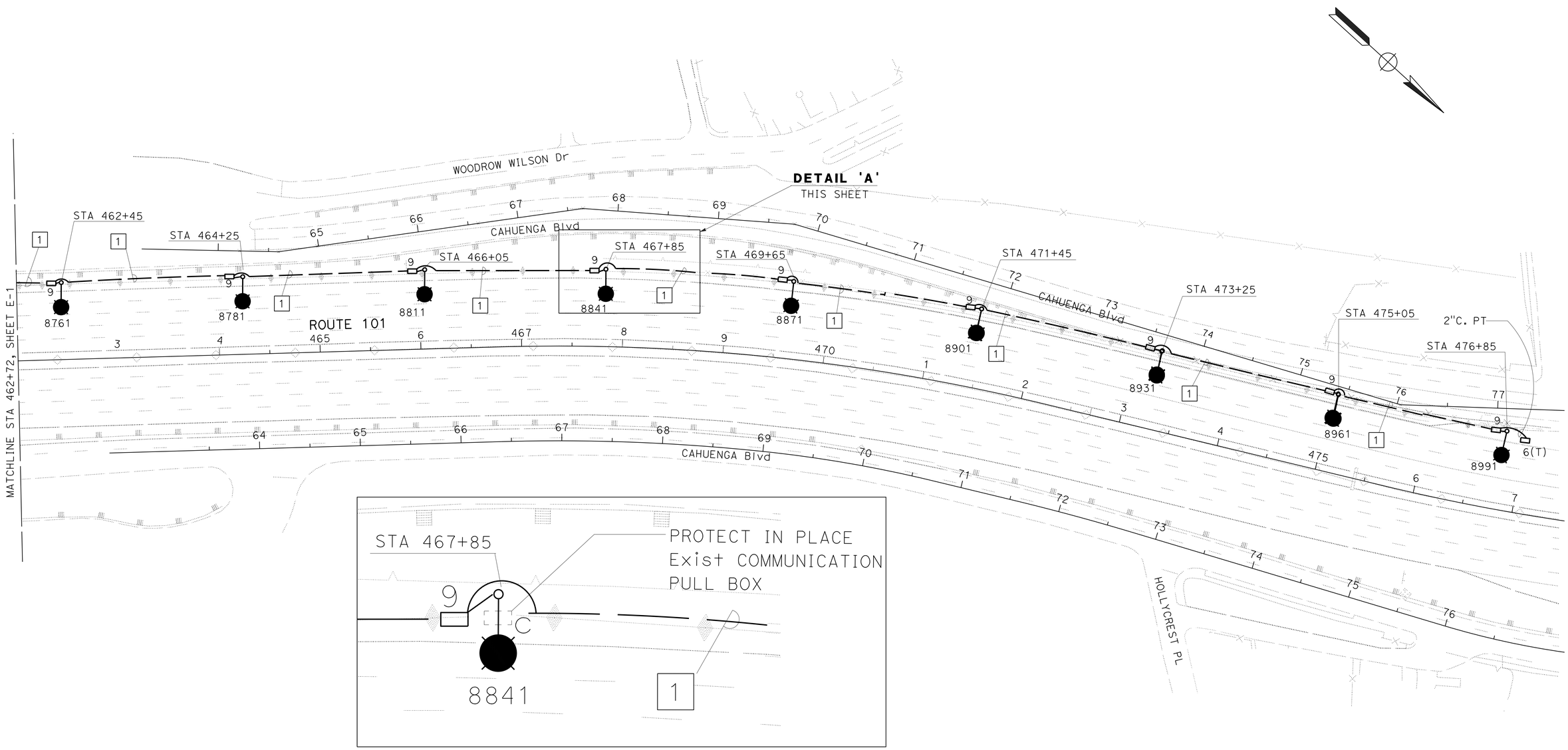

DETAIL 'A'

MODIFY LIGHTING

SCALE: 1"=50'

APPROVED FOR ELECTRICAL WORK ONLY

E-2

STATE OF CALIFORNIA - DEPARTMENT OF TRANSPORTATION
Caltrans® TRAFFIC DESIGN

FUNCTIONAL SUPERVISOR: OSWALD ELIZONDO
CALCULATED-DESIGNED BY: OHANNES ANSERLIAN
CHECKED BY: LIEN VO
REVISED BY / DATE REVISED

LAST REVISION 05-01-15
DATE PLOTTED => 24-SEP-2015
TIME PLOTTED => 14:38

Dist	COUNTY	ROUTE	POST MILES TOTAL PROJECT	SHEET No.	TOTAL SHEETS
07	LA	101	8.5/9.4	26	62

Johannes O Anserlian 3/2/15
REGISTERED ELECTRICAL ENGINEER DATE

6-29-15
PLANS APPROVAL DATE

REGISTERED PROFESSIONAL ENGINEER
OHANNES ANSERLIAN
No. E16682
Exp. 6/30/16
ELECTRICAL
STATE OF CALIFORNIA

THE STATE OF CALIFORNIA OR ITS OFFICERS OR AGENTS SHALL NOT BE RESPONSIBLE FOR THE ACCURACY OR COMPLETENESS OF SCANNED COPIES OF THIS PLAN SHEET.

NOTES: (THIS SHEET ONLY)

1. FOR ACCURATE RIGHT OF WAY DATA, CONTACT RIGHT OF WAY ENGINEERING AT THE DISTRICT OFFICE.
2. EXISTING UTILITY FACILITIES ARE NOT INCLUDED ON THESE PLANS.
3. FOR WIRING DIAGRAM, SEE SHEET E-5.

LEGEND: (THIS SHEET ONLY)

1 EXISTING 2"C, 4#6. ADD 1#8 (G).

2 RC HPS Lum.
INSTALL ROADWAY-2 (235 W) LED Lum.

3 EXISTING 2"C, 2#6. ADD 1#8 (G).

4 EXISTING 1"C, 2#6. ADD 1#8 (G).

5 EXISTING 2-2"C, 4#6. ADD 1#8 (G).

6 EXISTING 120/240 V TYPE III-BF
METERED SERVICE EQUIPMENT ENCLOSURE:
100 A, 2P, CB MAIN
15 A, 120 V, TEST SWITCH.
TYPE V PHOTOELECTRIC CONTROL UNIT.
30 A, 240 V, 2P, CB (Ltg Ckt No. 1)
30 A, 240 V, 2P, CB (Ltg Ckt No. 2)
15 A, 120 V, 1P, CB (FLASHING BEACON) SEE SHEET E-4
CTID: 07-053-101-R-009.400M
ADDRESS: 3300 1/4 CAHUENGA Blvd

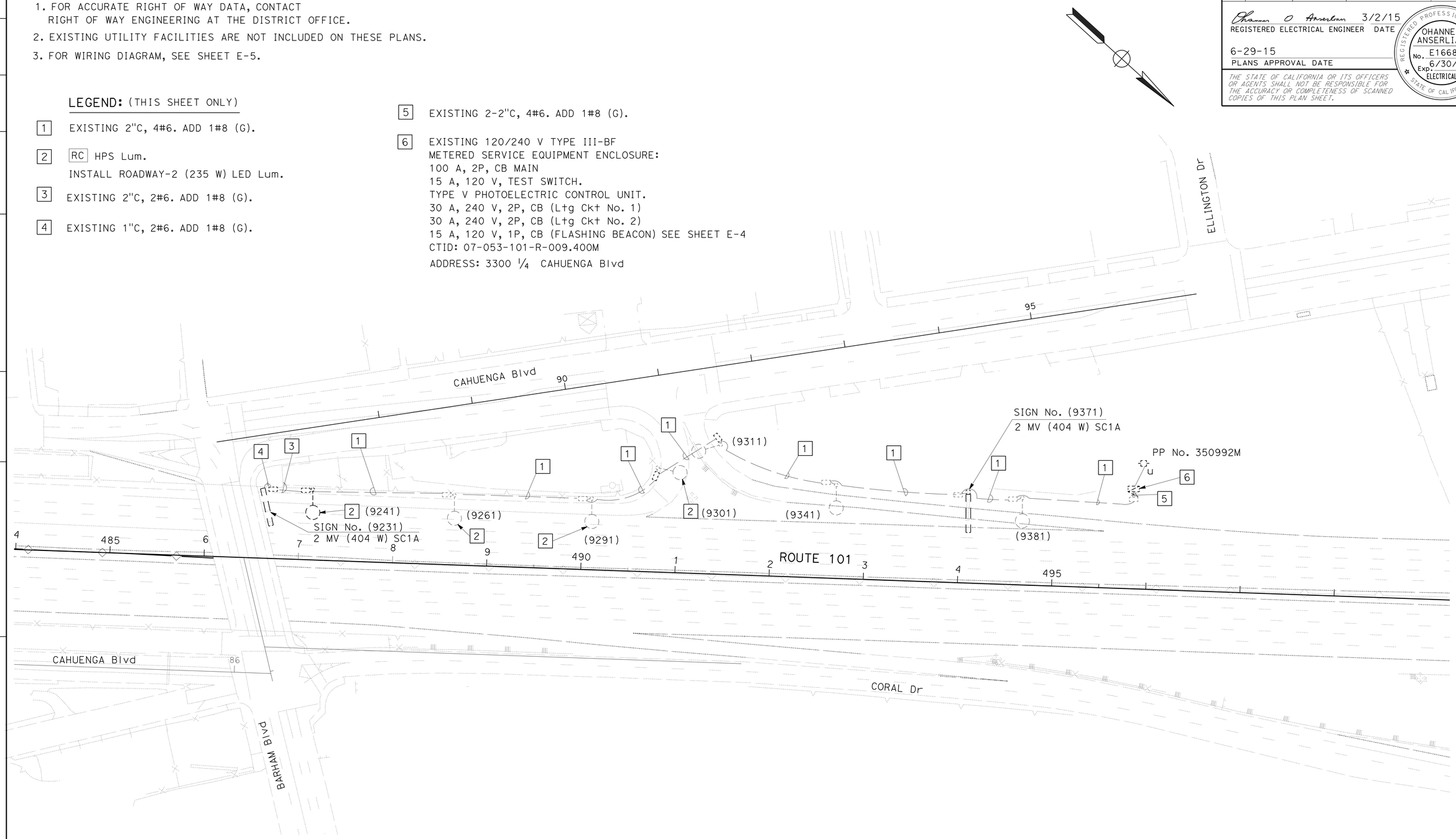

MODIFY LIGHTING

SCALE: 1"=50'

APPROVED FOR ELECTRICAL WORK ONLY

E-3

STATE OF CALIFORNIA - DEPARTMENT OF TRANSPORTATION
Caltrans
TRAFFIC DESIGN

FUNCTIONAL SUPERVISOR: OSWALD ELIZONDO
CALCULATED-DESIGNED BY: LIEN VO
CHECKED BY: OHANNES ANSERLIAN
REVISED BY
DATE REVISED

LAST REVISION 05-01-15
DATE PLOTTED => 24-SEP-2015
TIME PLOTTED => 14:38

Dist	COUNTY	ROUTE	POST MILES TOTAL PROJECT	SHEET No.	TOTAL SHEETS
07	LA	101	8.5/9.4	27	62

REGISTERED ELECTRICAL ENGINEER 3/2/15 DATE

6-29-15
PLANS APPROVAL DATE

REGISTERED PROFESSIONAL ENGINEER OHANNES ANSERLIAN No. E16682 Exp. 6/30/16 ELECTRICAL STATE OF CALIFORNIA

THE STATE OF CALIFORNIA OR ITS OFFICERS OR AGENTS SHALL NOT BE RESPONSIBLE FOR THE ACCURACY OR COMPLETENESS OF SCANNED COPIES OF THIS PLAN SHEET.

NOTES: (THIS SHEET ONLY)

1. FOR ACCURATE RIGHT OF WAY DATA, CONTACT RIGHT OF WAY ENGINEERING AT THE DISTRICT OFFICE.
2. REFER TO SHEETS U1-U3 FOR UTILITY INFORMATION.
3. FOR WIRING DIAGRAM, SEE SHEET E-5.
4. INSTALL 1"C TYPE 4 FROM JUCTION BOX TO 12" YELLOW BEACON SIGNAL.

LEGEND: (THIS SHEET ONLY)

1. EXISTING 2"C, 4#6. ADD 2#6.
2. INSTALL 3½ (T) PULL BOX.
3. EXISTING 2"C, 2#6.
4. EXISTING 1"C, 2#6.
5. EXISTING 2-2"C, 4#6. ADD 2#6.
6. INSTALL FLASHING BEACON CONTROL ASSEMBLY IN NEMA TYPE 3R JUNCTION BOX.
7. INSTALL 12" ONE SECTION YELLOW LED.
8. SEE STRUCTURE GENERAL PLANS FOR INSTALLATION OF CONDUITS AND PULL BOX IN SIDEWALK.
9. INSTALL 1"C, 2#6, 1#8 (G).
10. EXISTING 120/240 V TYPE III-BF METERED SERVICE EQUIPMENT ENCLOSURE:
    100 A, 2P, CB MAIN
    15 A, 120 V, TEST SWITCH.
    TYPE V PHOTOELECTRIC CONTROL UNIT.
    30 A, 240 V, 2P, CB (Ltg Ckt No. 1)
    30 A, 240 V, 2P, CB (Ltg Ckt No. 2)
    ADD:
    15 A, 120 V, 1P, CB (FLASHING BEACON)
    CTID: 07-053-101-R-009.400M
    ADDRESS: 3300 ¼ CAHUENGA Blvd
11. CORE THROUGH CURB 3" IN DIAMETER, INSTALL 2"C, 2#6, 1#8 (G).
12. INSTALL 1½" C DRAIN PIPE. SEE STRUCTURE MISCELLANEOUS DETAILS FOR INSTALLATION.

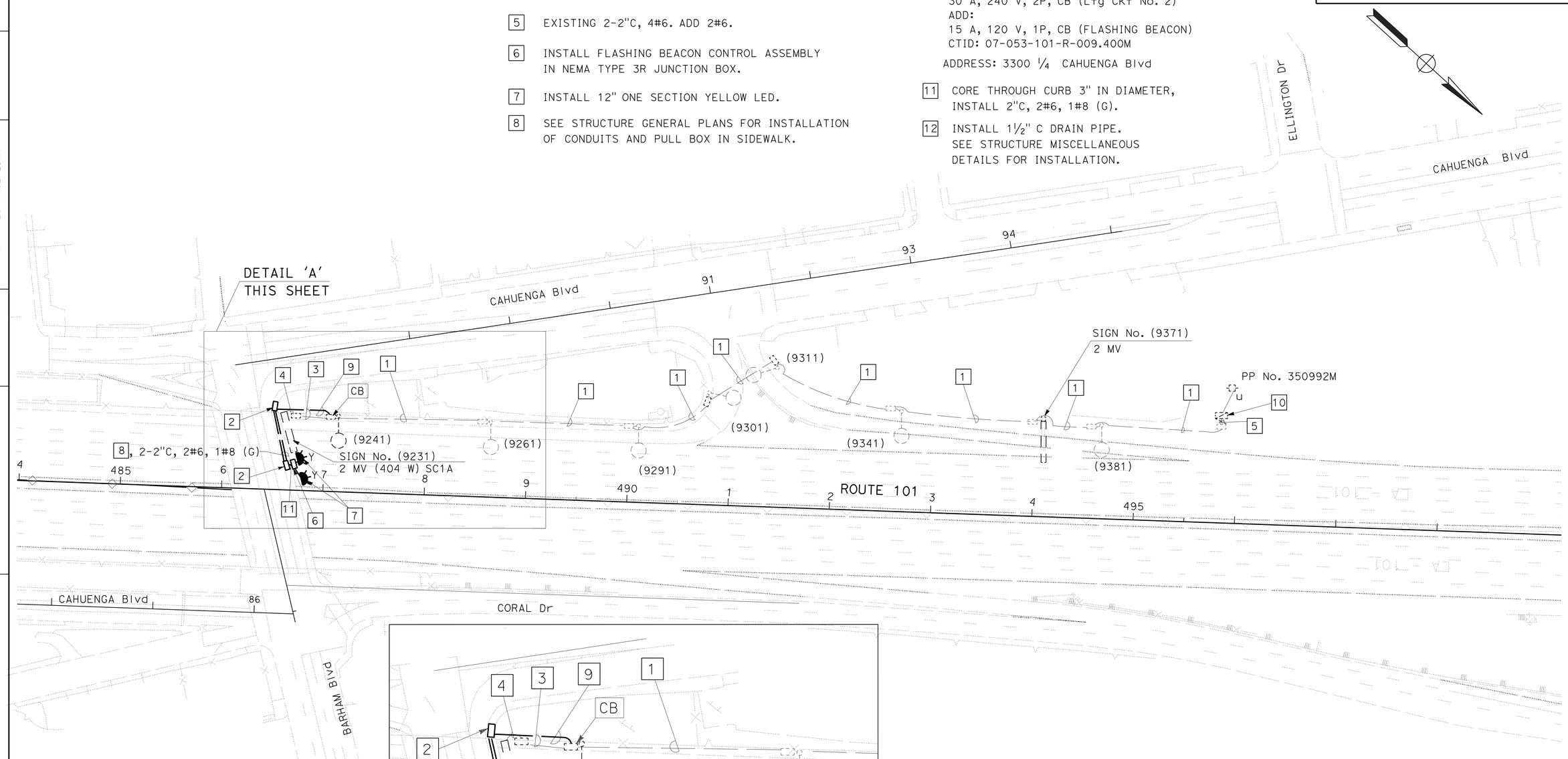

FLASHING BEACON SYSTEM

SCALE: 1"=50'

APPROVED FOR ELECTRICAL WORK ONLY

E-4

STATE OF CALIFORNIA - DEPARTMENT OF TRANSPORTATION
Caltrans® TRAFFIC DESIGN

FUNCTIONAL SUPERVISOR: OSWALD ELIZONDO
CALCULATED-DESIGNED BY: LIEN VO
CHECKED BY: OHANNES ANSERLIAN
REVISED BY
DATE REVISED

LAST REVISION 05-07-15
DATE PLOTTED => 24-SEP-2015
TIME PLOTTED => 14:38

Dist	COUNTY	ROUTE	POST MILES TOTAL PROJECT	SHEET No.	TOTAL SHEETS
07	LA	101	8.5/9.4	28	62

REGISTERED ELECTRICAL ENGINEER 3/2/15 DATE

6-29-15
PLANS APPROVAL DATE

REGISTERED PROFESSIONAL ENGINEER OHANNES ANSERLIAN No. E16682 Exp. 6/30/16 ELECTRICAL STATE OF CALIFORNIA

THE STATE OF CALIFORNIA OR ITS OFFICERS OR AGENTS SHALL NOT BE RESPONSIBLE FOR THE ACCURACY OR COMPLETENESS OF SCANNED COPIES OF THIS PLAN SHEET.

WIRING DIAGRAM LEGEND: (THIS SHEET ONLY)

- EXISTING CONDUCTOR
- NEW CONDUCTORS
- NEW 235 W LED LAMP
- NEW 310 W HPS LAMP
- SPLICE CONDUCTOR.
- EXIST LAMP.
- Y NEW 12" YELLOW LED LAMP
- RC CONDUCTOR
- EXIST SIGN LIGHTING LAMP.

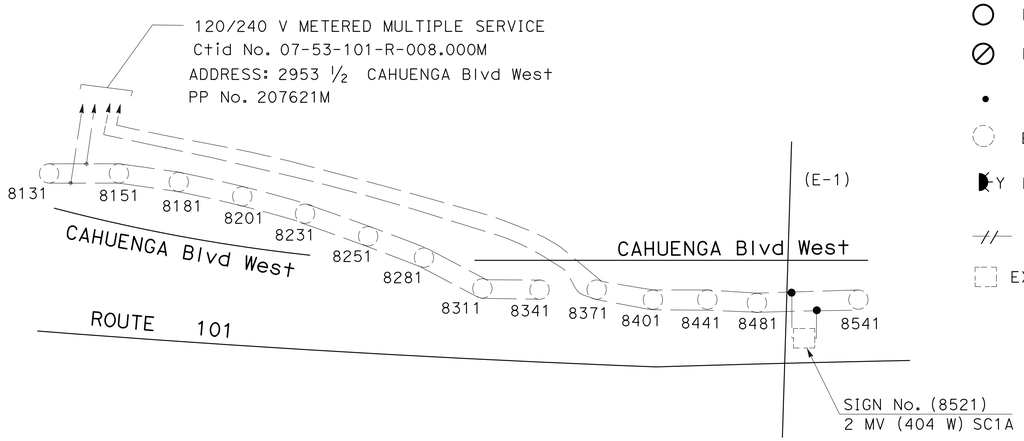

EXISTING WIRING DIAGRAM
(E-1)

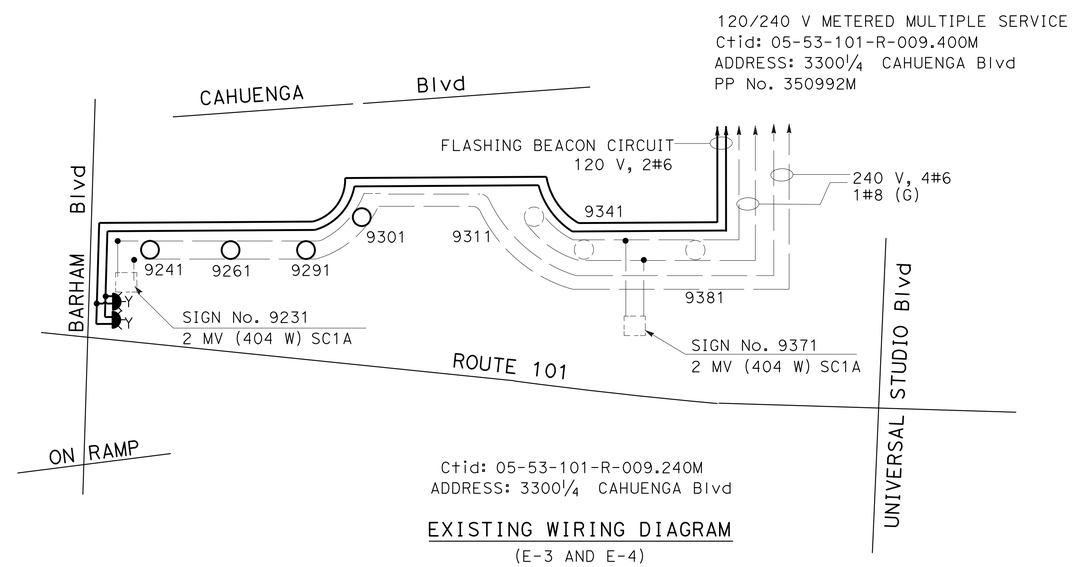

EXISTING WIRING DIAGRAM
(E-3 AND E-4)

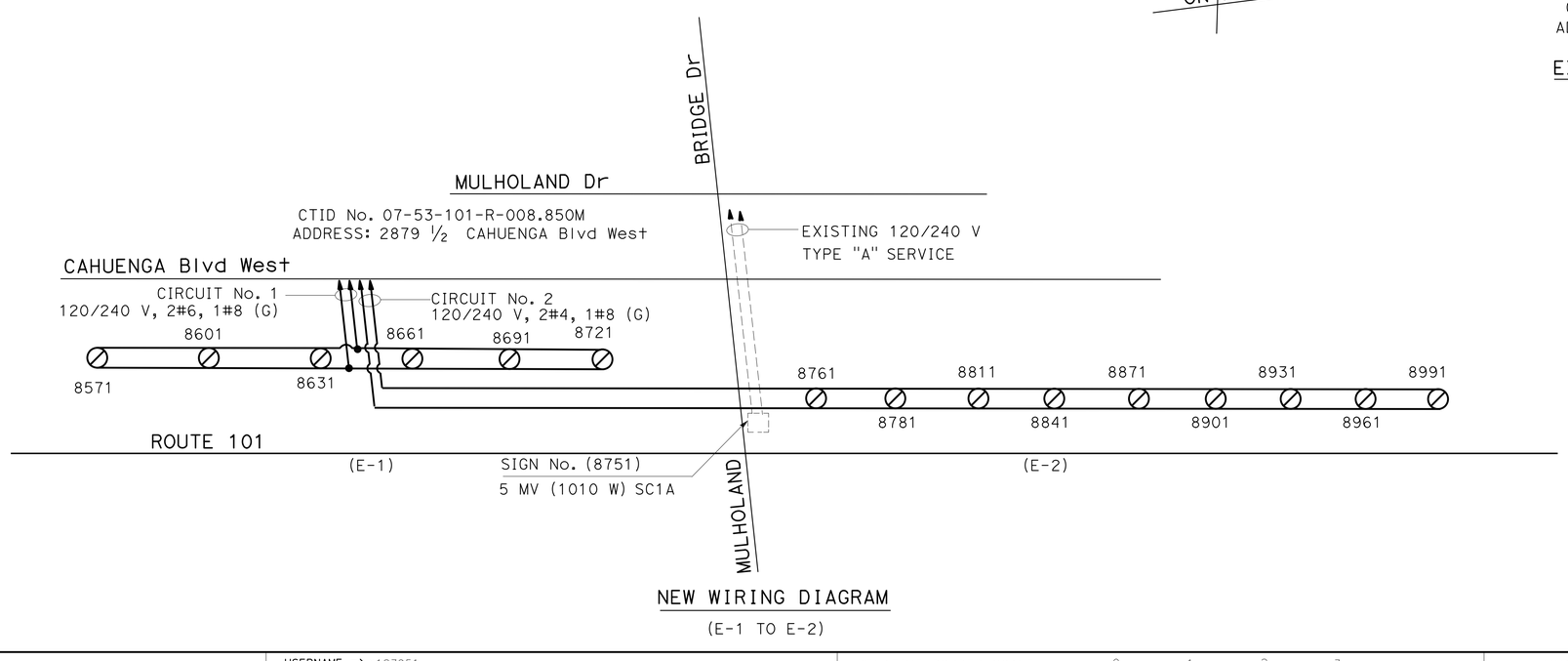

NEW WIRING DIAGRAM
(E-1 TO E-2)

FLASHING BEACON SYSTEM
MODIFY LIGHTING

NO SCALE

E-5

STATE OF CALIFORNIA - DEPARTMENT OF TRANSPORTATION
Caltrans® TRAFFIC DESIGN

FUNCTIONAL SUPERVISOR: OSWALD ELIZONDO
CALCULATED-DESIGNED BY: LIEN VO
CHECKED BY: OHANNES ANSERLIAN
REVISED BY
DATE REVISED

LAST REVISION 05-01-15
DATE PLOTTED => 24-SEP-2015
TIME PLOTTED => 14:38

Dist	COUNTY	ROUTE	POST MILES TOTAL PROJECT	SHEET No.	TOTAL SHEETS
07	LA	101	8.50/9.4	29	62

REGISTERED ELECTRICAL ENGINEER 3/2/15

6-29-15
PLANS APPROVAL DATE

REGISTERED PROFESSIONAL ENGINEER JACQUELINE TAN No. E015611 Exp.2-31-15 ELECTRICAL STATE OF CALIFORNIA

THE STATE OF CALIFORNIA OR ITS OFFICERS OR AGENTS SHALL NOT BE RESPONSIBLE FOR THE ACCURACY OR COMPLETENESS OF SCANNED COPIES OF THIS PLAN SHEET.

GENERAL NOTES: (E-7 THROUGH E-8)

1. CONDUIT CONTAINING FIBER OPTIC CABLE SHALL ENTER PULL BOXES ON THE SHORT SIDE ONLY. PULL BOXES SHALL NOT BE USED TO CHANGE ALIGNMENT OF THE COMMUNICATION CONDUIT.
2. EXISTING IRRIGATION SYSTEMS ARE NOT SHOWN FOR CLARITY.
3. NUMBER OF CONDUITS IN SOME COMMUNICATION RUNS MAY NOT BE SHOWN FOR CLARITY. THE CONTRACTOR SHALL REROUTE IMPACTED CONDUITS AND REPLACE ITS CONTENTS AS NOTED IN THE PLANS.
4. ALL PULL BOXES INSTALLED IN THE SHOULDER SHALL BE TRAFFIC RATED.

ABBREVIATIONS: (E-7 THROUGH E-8)

CCR	-	CAMERA CONTROL RECEIVER
CIA	-	CONTROLLER INTERFACE ASSEMBLY
COAX	-	COAXIAL CABLE
DS1	-	OPTICAL MODEM
FDU	-	FIBER DISTRIBUTION UNIT
FOTM	-	FIBER OPTIC TRAFFIC MODEM
FOCM	-	FIBER OPTIC CONTROL MODEM
FOSC	-	FIBER OPTIC SPLICE ENCLOSURE
INTRFCE	-	INTERFACE
LCU	-	LOCAL CONTROL UNIT
NHB	-	NORTH HOLLYWOOD HUB
P19	-	PAIR 19 AMERICAN WIRE GAUGE
P22	-	PAIR 22 AMERICAN WIRE GAUGE
PDA	-	POWER DISTRIBUTION ASSEMBLY
PR	-	PAIR
RMS	-	RAMP METERING SYSTEM
SMFO	-	SINGLEMODE FIBER OPTIC CABLE
TMC	-	TRAFFIC MANAGEMENT CENTER
TPC	-	TWISTED PAIR CABLE
TPSC	-	TWISTED PAIR SPLICE ENCLOSURE
VX	-	TRANSMITTER

LEGEND: (E-7 THROUGH E-8)

[V] EXISTING SPLICE VAULT

APPROVED FOR ELECTRICAL WORK ONLY

MODIFY COMMUNICATION SYSTEM
(ABBREVIATIONS, LEGEND AND NOTES)
SCALE: 1" = 50'

E-6

STATE OF CALIFORNIA - DEPARTMENT OF TRANSPORTATION
Caltrans® OFFICE OF ITS

FUNCTIONAL SUPERVISOR: JACQUELINE TAN
CALCULATED-DESIGNED BY: DAVID PADILLA
CHECKED BY: JACQUELINE TAN
REVISED BY
DATE REVISED

LAST REVISION 06-20-14
DATE PLOTTED => 24-SEP-2015
TIME PLOTTED => 14:38

Dist	COUNTY	ROUTE	POST MILES TOTAL PROJECT	SHEET No.	TOTAL SHEETS
07	LA	101	8.50/9.50	30	62

REGISTERED ELECTRICAL ENGINEER — DATE 3/2/15

6-29-15
PLANS APPROVAL DATE

REGISTERED PROFESSIONAL ENGINEER — JACQUELINE TAN — No. E015611 — Exp.12-31-15 — ELECTRICAL — STATE OF CALIFORNIA

THE STATE OF CALIFORNIA OR ITS OFFICERS OR AGENTS SHALL NOT BE RESPONSIBLE FOR THE ACCURACY OR COMPLETENESS OF SCANNED COPIES OF THIS PLAN SHEET.

NOTE:

FOR ACCURATE RIGHT OF WAY DATA, CONTACT RIGHT OF WAY ENGINEERING AT THE DISTRICT OFFICE.

LEGEND (THIS SHEET ONLY)

1. INSTALL 45′ CCTV POLE, IN NEW FOUNDATION. INSTALL CCTV ASSEMBLY FROM NOTE 2
2. RC CCTV POLE. RR CCTV ASSEMBLY.
3. RR CCTV CONTROL CABLES.
4. INSTALL 2"C AND CCTV CONTROL CABLES FROM NOTE 3.
5. INSTALL 2"C, 12SMFO, AND 2-6P22.
6. ADD 12SMFO AND 6P22.
7. INSTALL 2"C, AND 6P22.
8. NEW TMS 2079 CONTROLLER CABINET FOUNDATION. SEE E-9 FOR FOUNDATION DETAILS.
9. NEW CCTV 0090 CABINET FOUNDATION. SEE E-9 FOR FOUNDATION DETAILS.
10. REMOVE 2#6, 2#4. INSTALL 2#6, 2#4, 1#8G.
11. EXISTING 2#6 AND 2#4(SERVICE). ADD 1#8G.
12. INSTALL 2"C, 2#6, 2#4, AND 1#8G.
13. INSTALL 2"C, 2#6, 1#8G.
14. INSTALL 2"C, 2#4, 1#8G.
15. REUSE SPLICE ENCLOSURES. SPLICE NEW CABLES TO CURRENT CONFIGURATION.
16. INSTALL 2-3"C, AND 10 DLC.
17. RC EXISTING 5 dlc. INSTALL 5 DLC.
18. EXISTING CCTV 0090.
19. EXISTING TMS 2079.

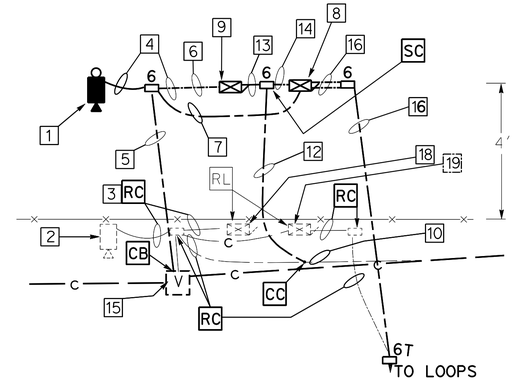

DETAIL 'A'

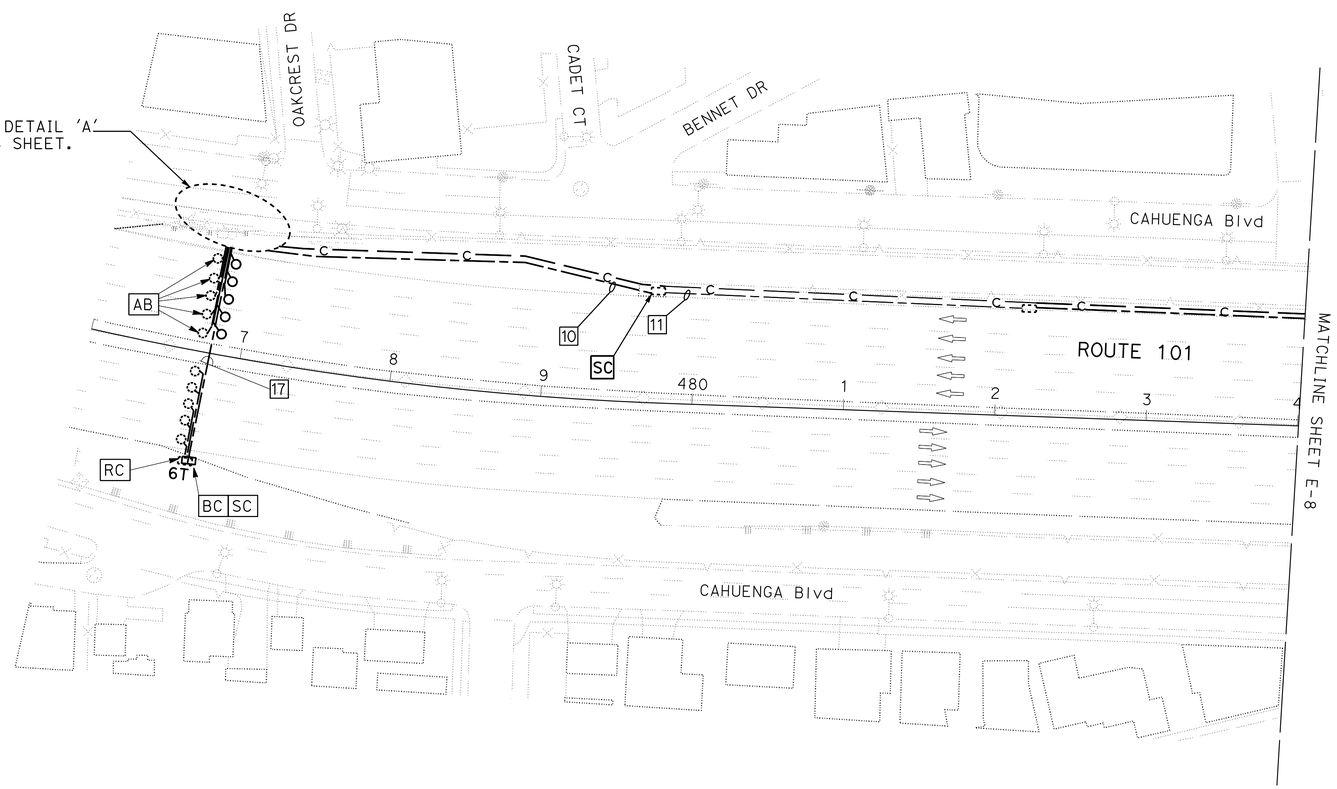

MODIFY COMMUNICATION SYSTEM

SCALE: 1"=50′

FOR LENGEND, ABBREVIATIONS & NOTES, SEE E-6.

APPROVED FOR ELECTRICAL WORK ONLY

E-7

STATE OF CALIFORNIA - DEPARTMENT OF TRANSPORTATION — OFFICE OF ITS

FUNCTIONAL SUPERVISOR: JACQUELINE TAN

CALCULATED-DESIGNED BY: DAVID PADILLA — CHECKED BY: JACQUELINE TAN

REVISED BY — DATE REVISED

LAST REVISION 00-00-00 — DATE PLOTTED => 24-SEP-2015 — TIME PLOTTED => 14:38

Dist	COUNTY	ROUTE	POST MILES TOTAL PROJECT	SHEET No.	TOTAL SHEETS
07	LA	101	8.50/9.4	31	62

Jacqueline C Tan 3/2/15
REGISTERED ELECTRICAL ENGINEER DATE

6-29-15
PLANS APPROVAL DATE

REGISTERED PROFESSIONAL ENGINEER
JACQUELINE TAN
No. E015611
Exp. 12-31-15
ELECTRICAL
STATE OF CALIFORNIA

THE STATE OF CALIFORNIA OR ITS OFFICERS OR AGENTS SHALL NOT BE RESPONSIBLE FOR THE ACCURACY OR COMPLETENESS OF SCANNED COPIES OF THIS PLAN SHEET.

NOTES: (THIS SHEET ONLY)

1. FOR ACCURATE RIGHT OF WAY DATA, CONTACT RIGHT OF WAY ENGINEERING AT THE DISTRICT OFFICE.
2. EXISTING UTILITY FACILITIES ARE NOT SHOWN ON THESE PLANS.

LEGEND: (THIS SHEET ONLY)

[1] EXISTING 2"C, 2#6, 2#4 (SERVICE). ADD 1#8(G).

[2] EXISTING 120/240 V METERED
TYPE III-BF SERVICE EQUIPMENT ENCLOSURE:
100 A, 2P, CB-MAIN
40 A, 120 V, 1P, CB (RMS)
30 A, 120 V, 1P, CB (TMS 2079)
30 A, 120 V, 1P, CB (CCTV)
ADDRESS: 3216 1/2 BARHAM Blvd
Ctid: 07-053-101-R-009.300M

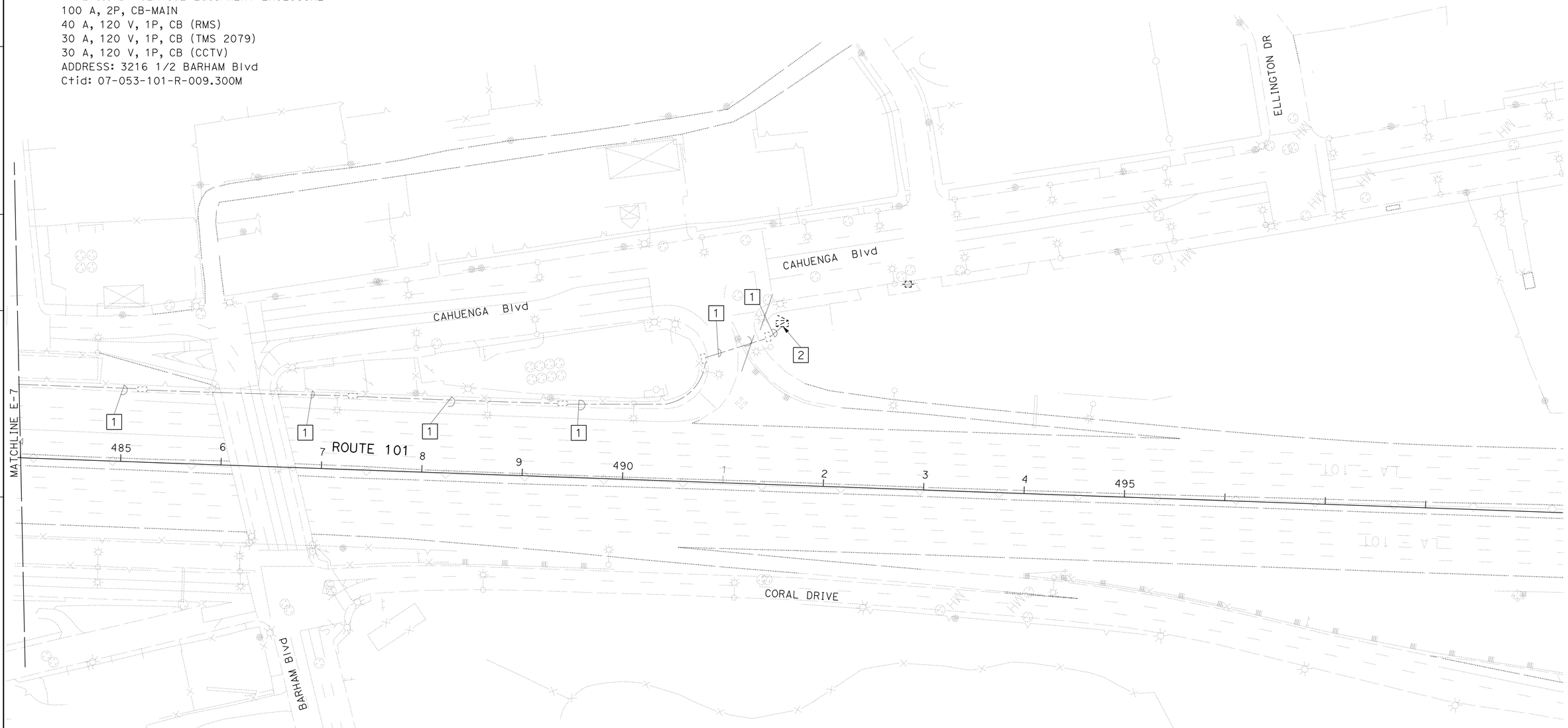

MODIFY COMMUNICATION SYSTEM

SCALE: 1"=50'

FOR LENGEND, ABBREVIATIONS & NOTES, SEE E-6.

APPROVED FOR ELECTRICAL WORK ONLY

E-8

STATE OF CALIFORNIA - DEPARTMENT OF TRANSPORTATION
Caltrans® **TRAFFIC DESIGN**

FUNCTIONAL SUPERVISOR: JACQUELINE TAN
CALCULATED-DESIGNED BY: DAVID PADILLA
CHECKED BY: JACQUELINE TAN
REVISED BY
DATE REVISED

LAST REVISION 10-24-14
DATE PLOTTED => 24-SEP-2015
TIME PLOTTED => 14:38

Dist	COUNTY	ROUTE	POST MILES TOTAL PROJECT	SHEET No.	TOTAL SHEETS
07	LA	101	8.50/9.4	32	62

REGISTERED ELECTRICAL ENGINEER 3/2/15 DATE

6-29-15
PLANS APPROVAL DATE

REGISTERED PROFESSIONAL ENGINEER JACQUELINE TAN No. E015611 Exp. 12-31-15 ELECTRICAL STATE OF CALIFORNIA

THE STATE OF CALIFORNIA OR ITS OFFICERS OR AGENTS SHALL NOT BE RESPONSIBLE FOR THE ACCURACY OR COMPLETENESS OF SCANNED COPIES OF THIS PLAN SHEET.

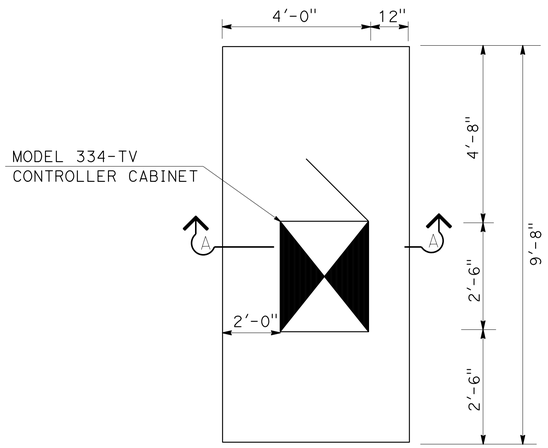

DETAIL A
PLAN VIEW

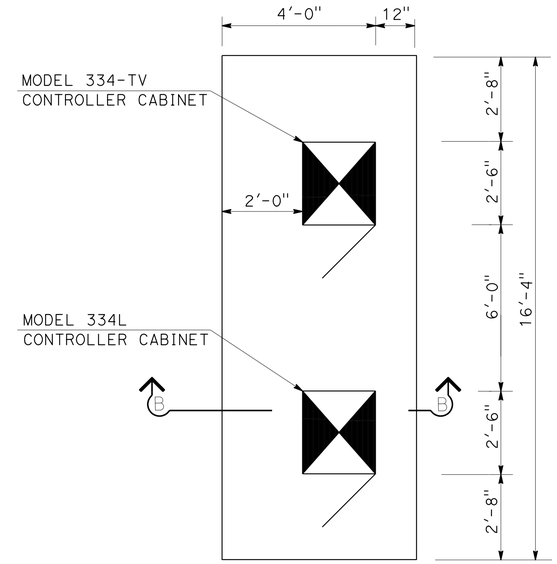

DETAIL B
PLAN VIEW

NOTES: (THIS SHEET ONLY)

1. CABINETS TO BE INSTALLED 30 FEET FROM ETW OR 6 FEET FROM MBGR FOR TYPICAL FIXED OBJECT INSTALLATION DETAILS.
2. CONSTRUCT PAD AND GRADE TO DRAIN AROUND AND AWAY FOR CABINET IN KEEPING WITH EXISTING DRAINAGE PATTERN.
3. CABINET DOOR MUST BE LOCATED PER PLAN AND HINGED TO AWAY FROM TRAVEL WAY.
4. FOR INFORMATION NOT SHOWN, SEE STANDARD PLAN SHEET ES-3C.

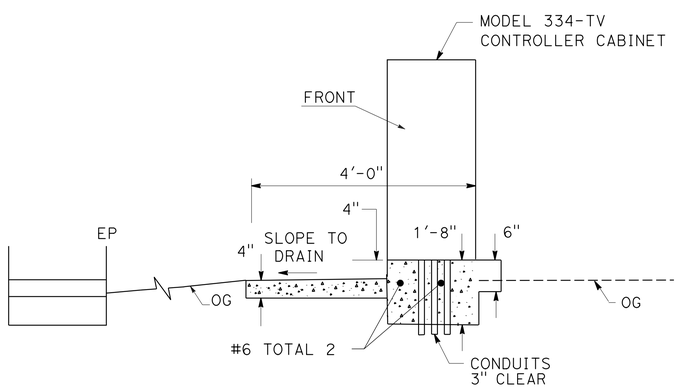

SECTION A-A
ELEVATION VIEW FOR DETAIL A

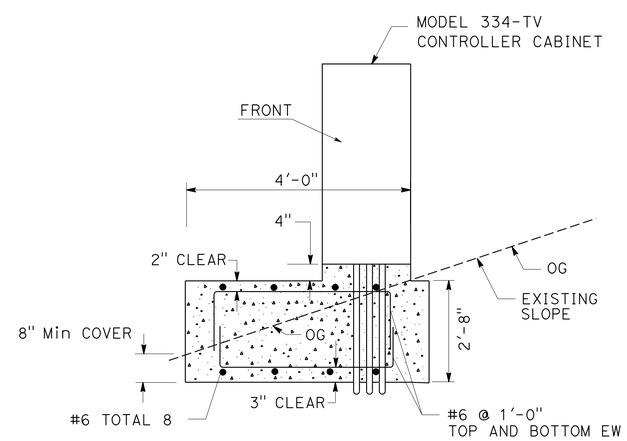

SECTION B-B
ELEVATION VIEW FOR DETAIL B

(CONTROLLER CABINET FOUNDATION DETAILS)

MODIFY COMMUNICATION SYSTEM

NO SCALE

E-9

STATE OF CALIFORNIA - DEPARTMENT OF TRANSPORTATION
Caltrans®
OFFICE OF ITS

FUNCTIONAL SUPERVISOR: JACQUELINE C. TAN
CALCULATED-DESIGNED BY: DAVID PADILLA
CHECKED BY: JACQUELINE C. TAN
REVISED BY
DATE REVISED

LAST REVISION 00-00-00
DATE PLOTTED => 24-SEP-2015
TIME PLOTTED => 14:38

Dist	COUNTY	ROUTE	POST MILES TOTAL PROJECT	SHEET No.	TOTAL SHEETS
07	LA	101	8.5/9.4	33	62

Ohannes O Anserlian 3/2/15
REGISTERED ELECTRICAL ENGINEER DATE

6-29-15
PLANS APPROVAL DATE

REGISTERED PROFESSIONAL ENGINEER
OHANNES ANSERLIAN
No. E16682
Exp.6/30/16
ELECTRICAL
STATE OF CALIFORNIA

THE STATE OF CALIFORNIA OR ITS OFFICERS OR AGENTS SHALL NOT BE RESPONSIBLE FOR THE ACCURACY OR COMPLETENESS OF SCANNED COPIES OF THIS PLAN SHEET.

NOTES: (THIS SHEET ONLY)
ITEMS SHOWN IN THIS TABLE ARE NOT A SEPARATE PAY ITEM, FOR INFORMATION ONLY.

MODIFY LIGHTING

SHEET No.	2"C	3"C	No. 5 (T) PB, WITH TAMPER RESISTANT COVER	No. 6 (T) PB, WITH TAMPER RESISTANT COVER	No. 9 PB	DECORATIVE TYPE 21 Ltg STANDARD, & FOUNDATION	310 W HPS Lum	235 W LED Lum	No. 6 CONDUCTOR	No. 8 (G) CONDUCTOR	No. 4 CONDUCTOR	TYPE III-BF SERVICE EQUIPMENT ENCLOSURE
	LF	LF	EA	EA	EA	EA	EA		LF	LF	LF	EA
E-1	1500	50	2	1	8	6	6		3000	1500	500	1
E-2	1600			1	9	9	9			1600	3200	
E-3								4		1300		

FLASHING BEACON SYSTEM

SHEET No.	1"C TYPE 4	2"C	TYPE 3R NEMA	No. 3½ (T) PULL BOX	No. 6 CONDUCTOR	No. 8 (G) CONDUCTOR	12" ONE SECTION YELLOW LED SIGNAL	FB CONTROL ASSEMBLY	1½" DRAINAGE PIPE
	LF	LF	EA	EA	EA	LF	EA	EA	LF
E-4	60	100	1	2	2600	100	2	1	3

ELECTRICAL QUANTITIES

E-10

REVISED BY | DATE REVISED
OHANNES ANSERLIAN | OSWALD ELIZONDO
CALCULATED-DESIGNED BY | CHECKED BY
FUNCTIONAL SUPERVISOR | OSWALD ELIZONDO
STATE OF CALIFORNIA - DEPARTMENT OF TRANSPORTATION
Caltrans
TRAFFIC DESIGN

LAST REVISION 05-01-15 | DATE PLOTTED => 24-SEP-2015 | TIME PLOTTED => 14:39

Dist	COUNTY	ROUTE	POST MILES TOTAL PROJECT	SHEET No.	TOTAL SHEETS
07	LA	101	8.50/9.4	34	62

REGISTERED ELECTRICAL ENGINEER 3/2/15 DATE

6-29-15
PLANS APPROVAL DATE

REGISTERED PROFESSIONAL ENGINEER
JACQUELINE TAN
No. E015611
Exp. 12/31/15
ELECTRICAL
STATE OF CALIFORNIA

THE STATE OF CALIFORNIA OR ITS OFFICERS OR AGENTS SHALL NOT BE RESPONSIBLE FOR THE ACCURACY OR COMPLETENESS OF SCANNED COPIES OF THIS PLAN SHEET.

NOTE: ITEMS SHOWN IN TABLES ARE NOT A SEPARATE ITEM, FOR INFORMATION ONLY.

MODIFY COMMUNICATION SYSTEM

SHEET No.	CCTV POLE FOUNDATION	CCTV POLE 45'	CCTV CABINET FOUNDATION	CUT TYPE E LOOPS	2" C	TMS CABINET FOUNDATION	#6 PB	2#4 AND 2#6 POWER CABLES	1#8G	DLC	12SMFO	6P22	RL CABINETS	RL CCTV ASSEMBLY	RR CCTV CONTROL CABLE	RC CONDUITS PB,CABLES	SPLICING, CABLING
	EA	EA	EA	EA	LF	EA	LF	LF	LF	LF	LF	LF	LS	LS	LS	LS	LS
E-7	1	1	1	5	150	1	5	150	1700	1500	80	60	1	1	1	1	1
E-8									800								

FOR LEGEND, ABBREVIATIONS AND NOTES SEE SHEET E-6

ELECTRICAL QUANTITIES

E-11

REVISED BY | DATE REVISED
DAVID PADILLA | JACQUELINE TAN
CALCULATED-DESIGNED BY | CHECKED BY
FUNCTIONAL SUPERVISOR
JACQUELINE TAN

STATE OF CALIFORNIA - DEPARTMENT OF TRANSPORTATION
Caltrans
OFFICE OF ITS

LAST REVISION 00-00-00 | DATE PLOTTED => 24-SEP-2015 | TIME PLOTTED => 14:39

DIST	COUNTY	ROUTE	POST MILES TOTAL PROJECT	SHEET No	TOTAL SHEETS
07	LA	101	8.5/9.4	35	62

Eliseo Lopez 12/23/14
REGISTERED CIVIL ENGINEER DATE

6-29-15
PLANS APPROVAL DATE

REGISTERED PROFESSIONAL ENGINEER ELISEO LOPEZ No. 72910 Exp. 12/31/16 CIVIL STATE OF CALIFORNIA

The State of California or its officers or agents shall not be responsible for the accuracy or completeness of electronic copies of this plan sheet.

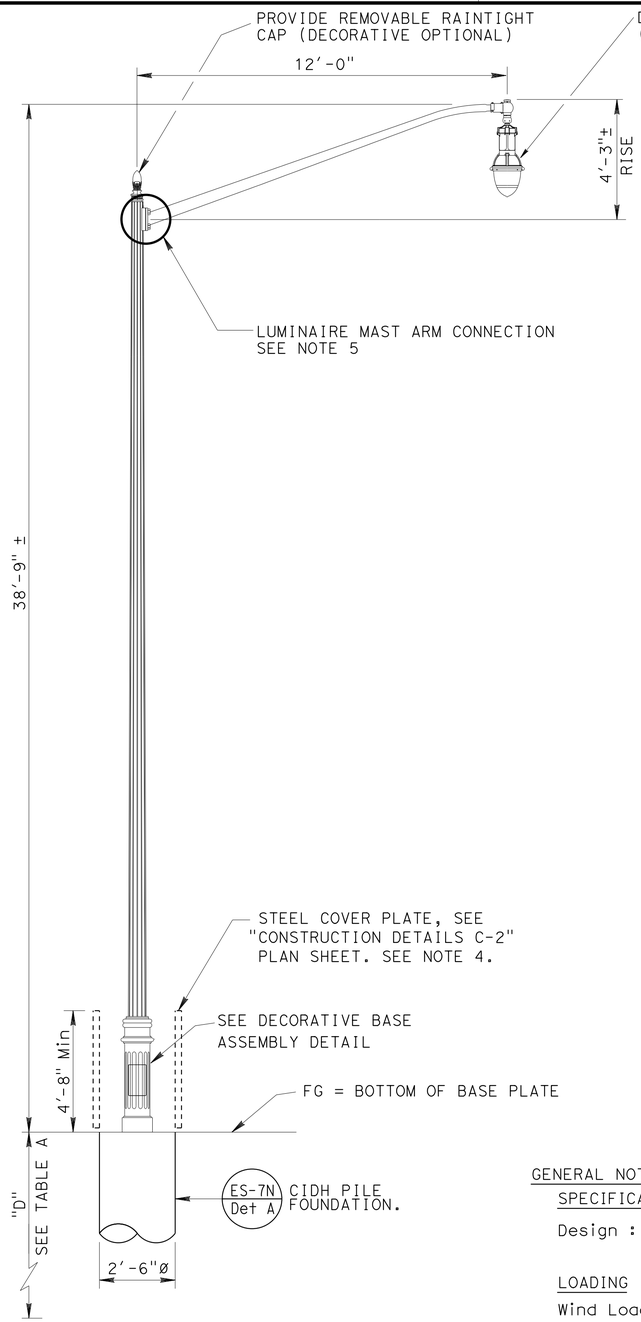

ELEVATION

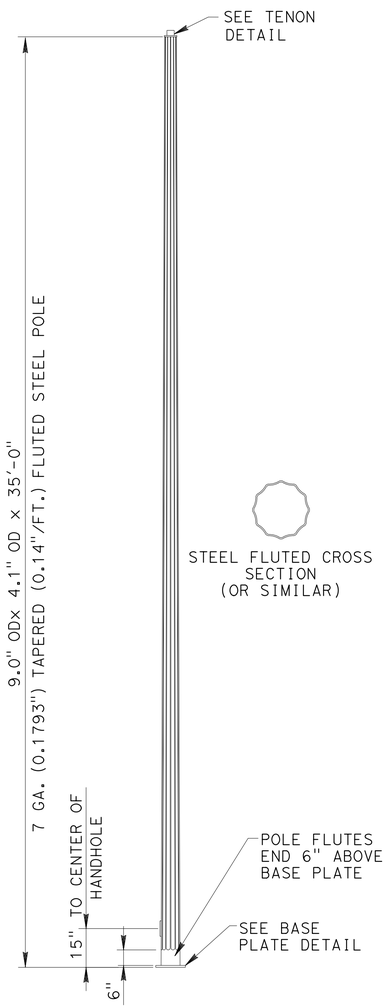

STEEL FLUTED CROSS SECTION (OR SIMILAR)

POLE DETAIL

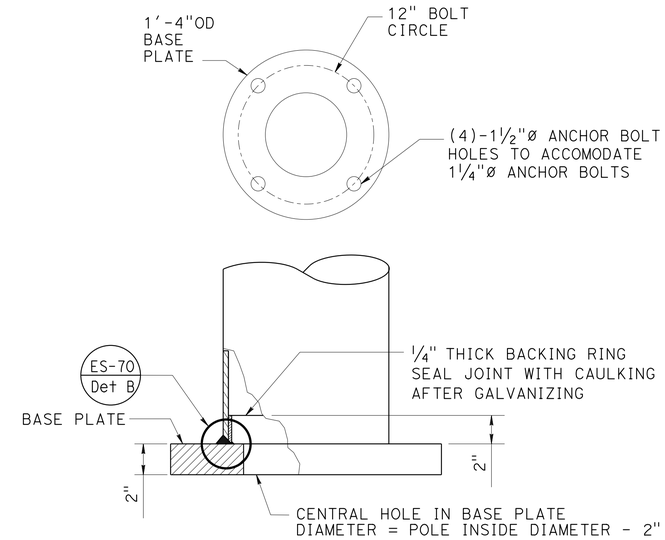

(Fluting not shown for clarity)

BASE PLATE DETAIL

TABLE A		
"D" 2'-6"ø CIDH PILE		
UP TO 4H:1V	UP TO 2H:1V	UP TO 1H:1V
7'-0"	8'-0"	9'-0"

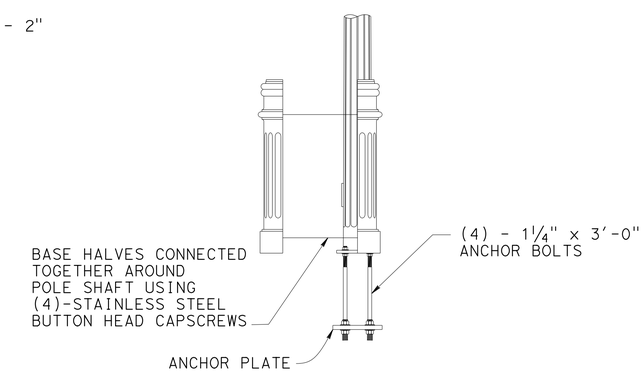

DECORATIVE BASE ASSEMBLY DETAIL

NOTE:
THE CONTRACTOR MUST VERIFY ALL CONTROLLING FIELD DIMENSIONS BEFORE ORDERING OR FABRICATING ANY MATERIAL.

GENERAL NOTES:

SPECIFICATIONS

Design : AASHTO Standard Specifications for Structural Supports for Highway Signs, Luminaires and Traffic Signals, Sixth Edition.

LOADING

Wind Loading : 100 mph (3 - second gust)

UNIT STRESSES

Structural Steel : fy = 55,000 psi tapered steel tube
fy = 50,000 psi unless otherwise noted.

Anchor bolts : fy = 55,000 psi unless otherwise noted.

Reinforced Concrete : f'c = 3,600 psi
fy = 60,000 psi

NOTES:

1. For pole locations, see "Roadway Plans".
2. All steel shall be galvanized after fabrication.
3. During pole erection the post must be raked as necessary with the use of leveling nuts to provide a plumb pole axis.
4. Decorative steel pole must be protected by Type 60C Barrier (Mod) and steel cover plate, see "Construction Details C-2" plan sheet.
5. Luminaire mast arm details and luminaire mast arm connection to the pole must conform to requirements on the "2010 Standard Plans" ES-6A for a Type 21 standard pole.
6. For anchorage details not shown, see "2010 Standard Plans" ES-7M.
7. For hand hole details not shown, see "2010 Standard Plans" ES-7M, Detail A, except for the vertical placement which is specified in the "Pole Details".
8. The foundation must be treated as level ground condition if the slope inclination is flatter than 4H:1V.
9. Decorative base must be cast iron and galvanized.
10. For details not shown, see "2010 Standard Plans" and "2010 Revised Standard Plans".

NO SCALE

STANDARD PLAN SHEET No.
DETAIL No.

BRANCH CHIEF *JEFF WOODY*

	BY	CHECKED
DESIGN	ELISEO LOPEZ	MAHFOUD LICHA
DETAILS	M.CLEVERLEY	MAHFOUD LICHA
QUANTITIES		

STATE OF CALIFORNIA
DEPARTMENT OF TRANSPORTATION

DIVISION OF ENGINEERING SERVICES
DESIGN AND TECHNICAL SERVICES
SPECIAL DESIGNS BRANCH A

BRIDGE NO. N/A
POST MILE 8.5/9.5

MODIFIED TYPE 21 DECORATIVE STEEL POLE DETAILS

SES-1

(ENGLISH) SPECIAL DESIGNS BRANCH BORDER SHEET (REV. 4-1-14)

ORIGINAL SCALE IN INCHES FOR REDUCED PLANS 0 1 2 3

UNIT: 3619
PROJECT NUMBER & PHASE: 0700020928-1 CONTRACT NO.: 07-287601

DISREGARD PRINTS BEARING EARLIER REVISION DATES
REVISION DATES 10-23-14 12-15-14 12-16-14 12-23-14

SHEET 1 OF 1

FILE => /2014sd/07-287601/07-287601_ses-01.dgn

USERNAME => s127951 DATE PLOTTED => 24-SEP-2015 TIME PLOTTED => 14:44

DIST	COUNTY	ROUTE	POST MILES TOTAL PROJECT	SHEET No	TOTAL SHEETS
07	LA	101	8.5/9.4	36	62

REGISTERED CIVIL ENGINEER 1/27/15 DATE

6-29-15
PLANS APPROVAL DATE

REGISTERED PROFESSIONAL ENGINEER JUAN J. JAUREGUI JR. No. C63939 Exp. 9/30/16 CIVIL STATE OF CALIFORNIA

The State of California or its officers or agents shall not be responsible for the accuracy or completeness of electronic copies of this plan sheet.

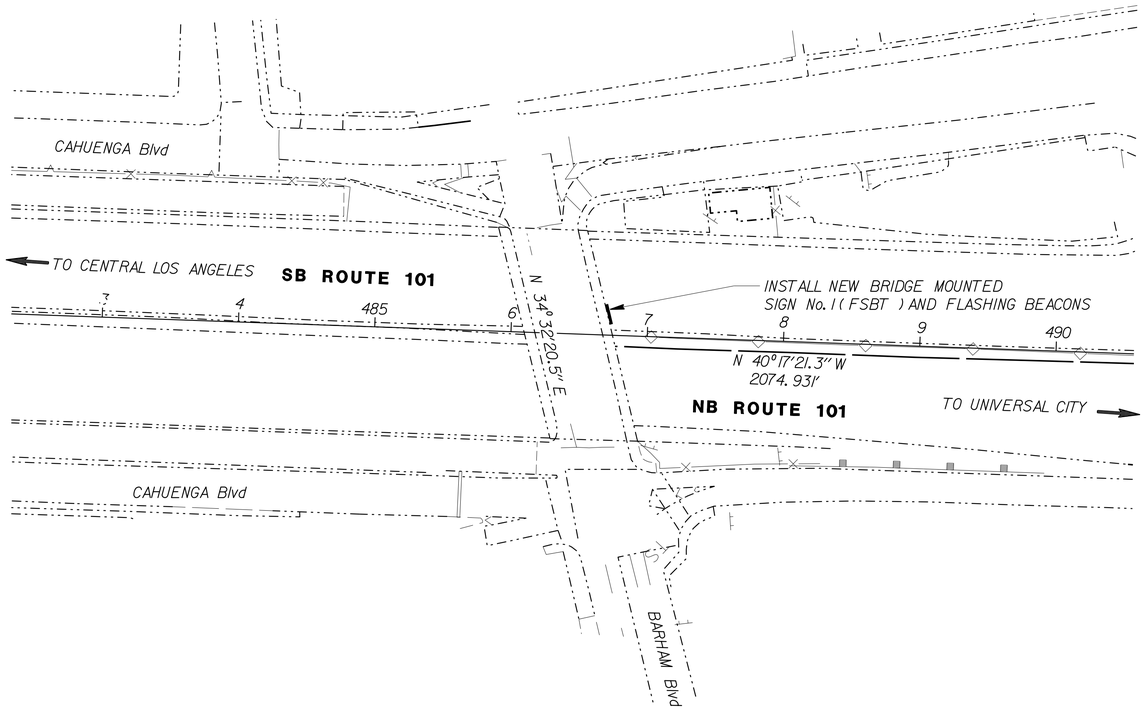

LOCATION PLAN

NOTES:

1. Location plan accurate only for the orientation of the bridge mounted sign relative to the bridge.
2. For sign locations, see "SIGN PLANS".
3. For flashing beacon equipment, see "ELECTRICAL PLANS".
4. For details not shown, see "STANDARD PLANS 2010".

LEGEND:

—·—·—·— Existing structure

———— New structure

BMS Bridge Mounted Sign

STANDARD PLANS 2010

A10A ACRONYMS AND ABBREVIATIONS (SHEET 1 OF 2)
A10B ACRONYMS AND ABBREVIATIONS (SHEET 2 OF 2)

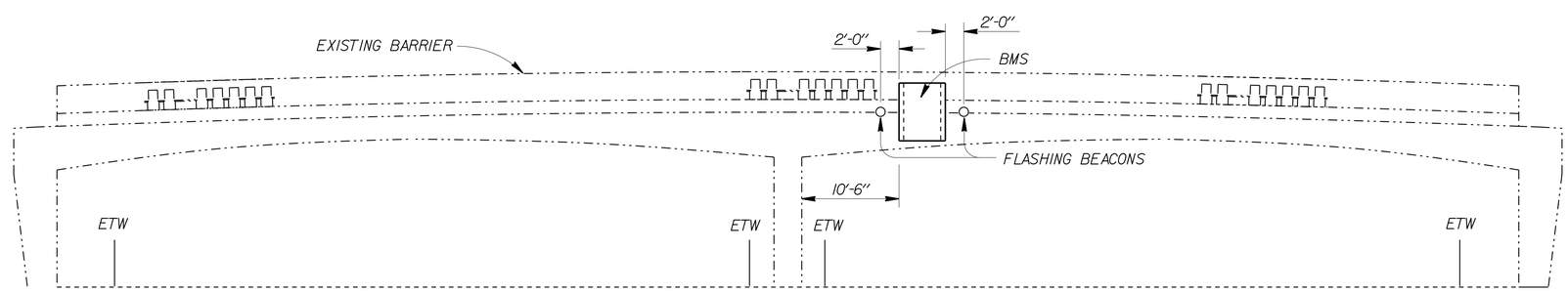

ELEVATION

SIGN No. 1 (FSBT)

NOTE:
THE CONTRACTOR MUST VERIFY ALL CONTROLLING FIELD DIMENSIONS BEFORE ORDERING OR FABRICATING ANY MATERIAL.

STANDARD PLAN SHEET No.
DETAIL No.

NO SCALE

BRANCH CHIEF JEFF WOODY	DESIGN	BY JUAN JAUREGUI	CHECKED DEVANG VORA
	DETAILS	BY R. YEE	CHECKED JUAN JAUREGUI
	QUANTITIES	BY JUAN JAUREGUI	CHECKED DEVANG VORA

STATE OF CALIFORNIA
DEPARTMENT OF TRANSPORTATION

DIVISION OF ENGINEERING SERVICES
DESIGN AND TECHNICAL SERVICES
SPECIAL DESIGNS BRANCH
A

BRIDGE NO. 53-0466
POST MILE 9.22

BARHAM BLVD OVERCROSSING
BRIDGE MOUNTED SIGN - LOCATION PLAN

SDS-1

(ENGLISH) SPECIAL DESIGNS BRANCH BORDER SHEET (REV. 7-1-09)

ORIGINAL SCALE IN INCHES FOR REDUCED PLANS 0 1 2 3

UNIT: 3619
PROJECT ID & PHASE: 0700020928-1
CONTRACT No.: 07-287604

DISREGARD PRINTS BEARING EARLIER REVISION DATES

REVISION DATES 7/18/14 7/25/14 8/18/14 1/27/15

SHEET OF

FILE => /2014sd/07-287601/SDS-1

USERNAME => s127951 DATE PLOTTED => 24-SEP-2015 TIME PLOTTED => 14:44

DIST	COUNTY	ROUTE	POST MILES TOTAL PROJECT	SHEET No	TOTAL SHEETS
07	LA	101	8.5/9.4	37	62

REGISTERED CIVIL ENGINEER 1/27/15 DATE

6-29-15
PLANS APPROVAL DATE

REGISTERED PROFESSIONAL ENGINEER JUAN J. JAUREGUI JR. No. C63939 Exp. 9/30/16 CIVIL STATE OF CALIFORNIA

The State of California or its officers or agents shall not be responsible for the accuracy or completeness of electronic copies of this plan sheet.

NOTES:

1. For "DETAIL A" and "DETAIL B", see "BRIDGE MOUNTED SIGNS TYPICAL DETAILS" sheet.
2. For details not shown, see "STANDARD PLANS 2010".
3. All high strength (HS) bolts must be snug tightened.
4. Minimum size fillet weld is 1/4" or thickness of thinner part, unless noted otherwise.
5. Unless otherwise shown, all steel must be galvanized after fabrication.

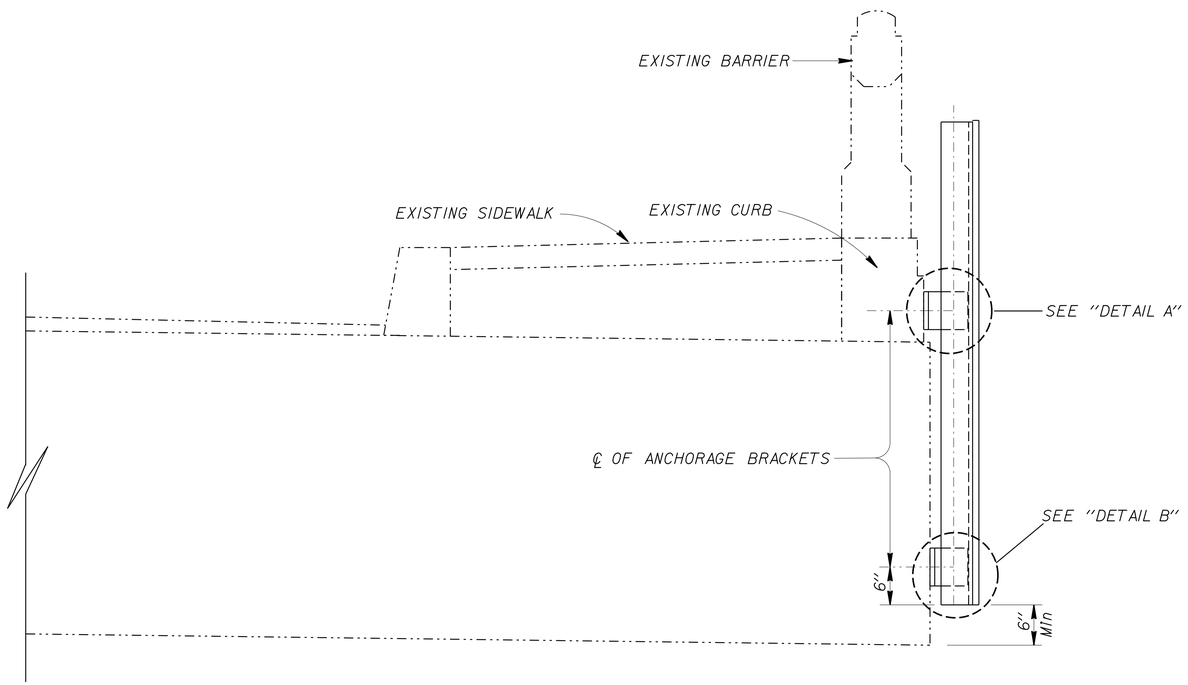

TYPICAL SECTION

SIGN No. 1 (FSBT)

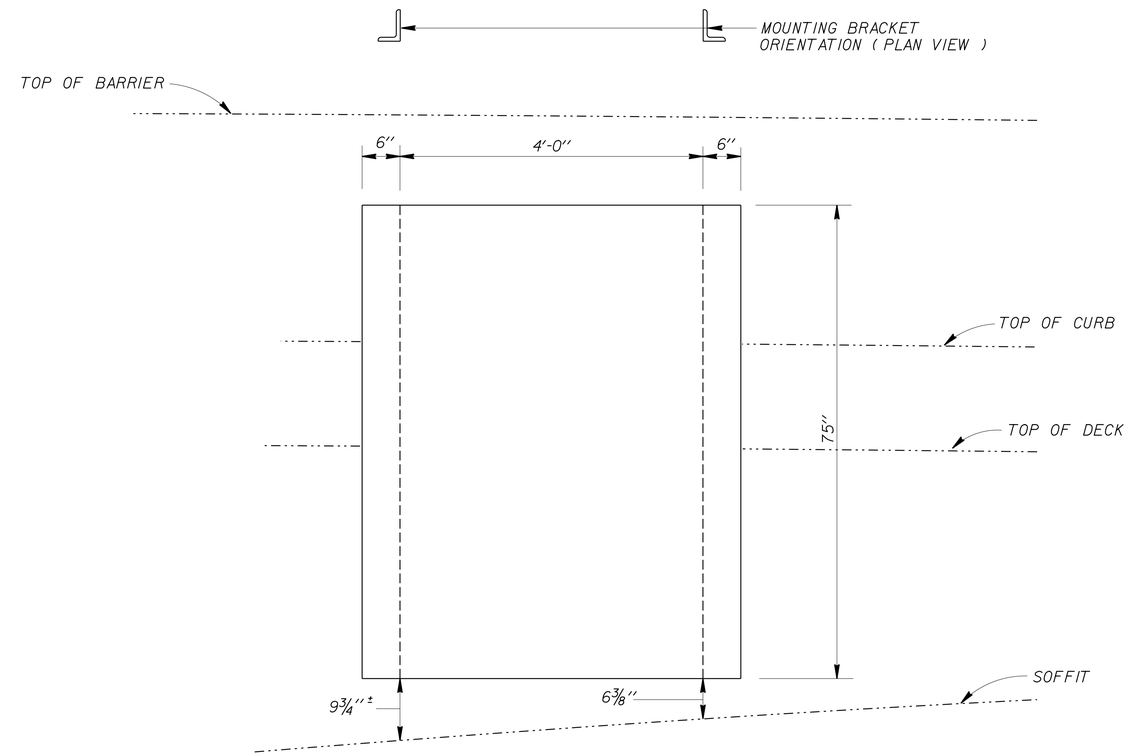

ELEVATION

(FSBT)

NOTE:
THE CONTRACTOR MUST VERIFY ALL CONTROLLING FIELD DIMENSIONS BEFORE ORDERING OR FABRICATING ANY MATERIAL.

STANDARD PLAN SHEET No.
DETAIL No.

NO SCALE

BRANCH CHIEF	JEFF WOODY		
DESIGN	BY JUAN JAUREGUI	CHECKED DEVANG VORA	
DETAILS	BY R. YEE	CHECKED JUAN JAUREGUI	
QUANTITIES	BY JUAN JAUREGUI	CHECKED DEVANG VORA	

STATE OF CALIFORNIA
DEPARTMENT OF TRANSPORTATION

DIVISION OF ENGINEERING SERVICES
DESIGN AND TECHNICAL SERVICES
SPECIAL DESIGNS BRANCH
A

BRIDGE NO. 53-0466
POST MILE 9.22

BARHAM BLVD OVERCROSSING

BRIDGE MOUNTED SIGN ELEVATION AND TYPICAL SECTION

SDS-2

(ENGLISH) SPECIAL DESIGNS BRANCH BORDER SHEET (REV. 7-1-09)

ORIGINAL SCALE IN INCHES FOR REDUCED PLANS 0 1 2 3

UNIT: 3619
PROJECT ID & PHASE: 0700020928-1
CONTRACT No.: 07-287604

DISREGARD PRINTS BEARING EARLIER REVISION DATES → 1/14/14 1/27/15 1/14/14 1/14/14

SHEET OF

FILE => /2014sd/07-287601/SDS-2

USERNAME => s12951 DATE PLOTTED => 24-SEP-2015 TIME PLOTTED => 14:44

DIST	COUNTY	ROUTE	POST MILES TOTAL PROJECT	SHEET No	TOTAL SHEETS
07	LA	101	8.5/9.4	38	62

REGISTERED CIVIL ENGINEER 1/27/15 DATE

6-29-15
PLANS APPROVAL DATE

REGISTERED PROFESSIONAL ENGINEER JUAN J. JAUREGUI JR. No. C63939 Exp. 9/30/16 CIVIL STATE OF CALIFORNIA

The State of California or its officers or agents shall not be responsible for the accuracy or completeness of electronic copies of this plan sheet.

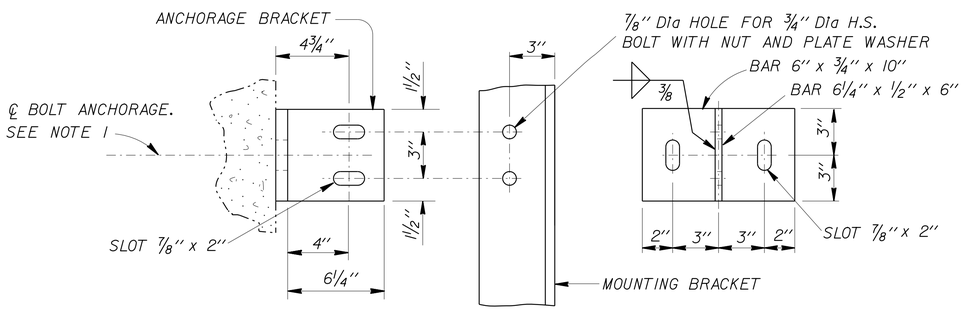

DETAIL A

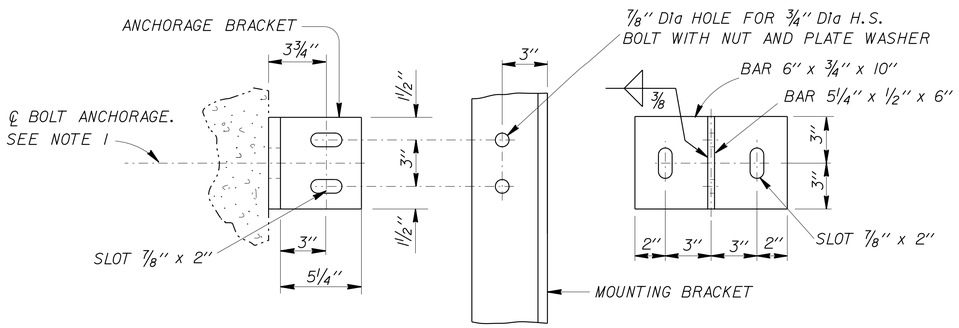

DETAIL B

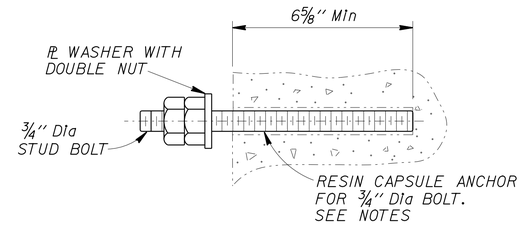

RESIN CAPSULE BOLT ANCHORAGE

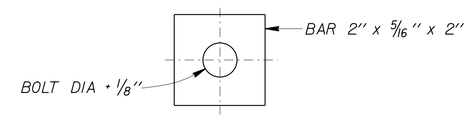

PLATE WASHER

FOR ALL SLOTTED HOLES OR WHERE NOTED

NOTES:

1. Resin capsule bolt anchors must be installed in sound concrete free of cracks or delamination.
2. Resin capsule anchorage is subject to approval of the Engineer. Installation procedure must comply with manufacturer's instructions.
3. Unless otherwise shown, all steel must be galvanized after fabrication.

NOTE:
THE CONTRACTOR MUST VERIFY ALL CONTROLLING FIELD DIMENSIONS BEFORE ORDERING OR FABRICATING ANY MATERIAL.

STANDARD PLAN SHEET No.
DETAIL No.

NO SCALE

BRANCH CHIEF	JEFF WOODY	DESIGN	BY JUAN JAUREGUI	CHECKED DEVANG VORA
		DETAILS	BY R. YEE	CHECKED JUAN JAUREGUI
		QUANTITIES	BY JUAN JAUREGUI	CHECKED DEVANG VORA

STATE OF CALIFORNIA
DEPARTMENT OF TRANSPORTATION

DIVISION OF ENGINEERING SERVICES
DESIGN AND TECHNICAL SERVICES
SPECIAL DESIGNS BRANCH
A

BRIDGE NO. 53-0466
POST MILE 9.22

BARHAM BLVD OVERCROSSING
BRIDGE MOUNTED SIGN - TYPICAL DETAILS

SDS-3

(ENGLISH) SPECIAL DESIGNS BRANCH BORDER SHEET (REV. 7-1-09)

ORIGINAL SCALE IN INCHES FOR REDUCED PLANS 0 1 2 3

UNIT: 3619
PROJECT ID & PHASE: 0700020928-1
CONTRACT No.: 07-287604

DISREGARD PRINTS BEARING EARLIER REVISION DATES

REVISION DATES 7/11/14 7/18/14 1/21/15 SHEET OF

FILE => /2014sd/07-287601/SDS-3

USERNAME => s127951 DATE PLOTTED => 24-SEP-2015 TIME PLOTTED => 14:44

DIST	COUNTY	ROUTE	POST MILES TOTAL PROJECT	SHEET No	TOTAL SHEETS
07	LA	101	8.5/9.4	39	62

REGISTERED CIVIL ENGINEER 1/27/15 DATE

6-29-15
PLANS APPROVAL DATE

REGISTERED PROFESSIONAL ENGINEER JUAN J. JAUREGUI JR. No. C63939 Exp. 9/30/16 CIVIL STATE OF CALIFORNIA

The State of California or its officers or agents shall not be responsible for the accuracy or completeness of electronic copies of this plan sheet.

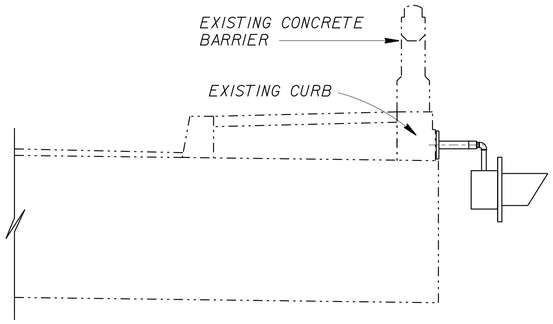

TYPICAL SECTION

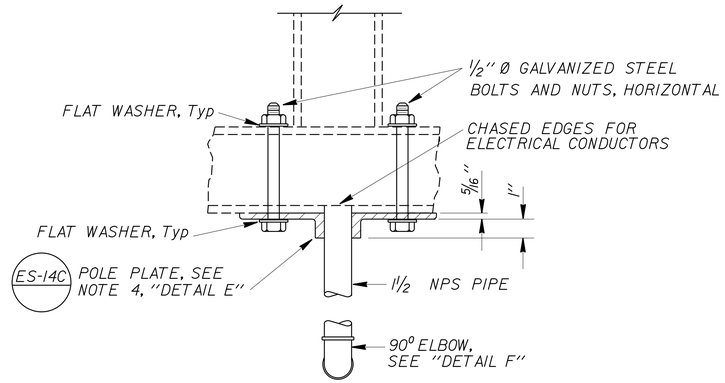

POLE PLATE FOR BEACON MOUNTING
DETAIL C

NOTES:

1. Resin capsule anchorages are subject to approval of Engineer. Installation procedure must comply with manufacturer's instructions.
2. Resin capsule bolt anchors must be installed in sound concrete free of cracks or delamination.
3. Pole plate must be bronze or galvanized duct iron.
4. For details not shown, see "STANDARD PLANS 2010".

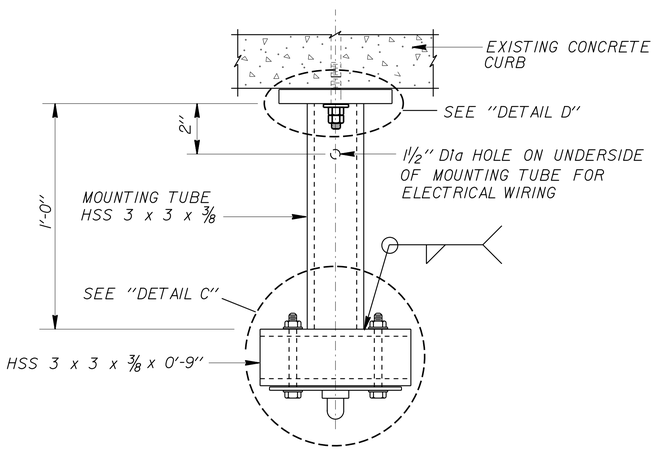

PLAN
FRAME MOUNTING TUBE CONNECTION

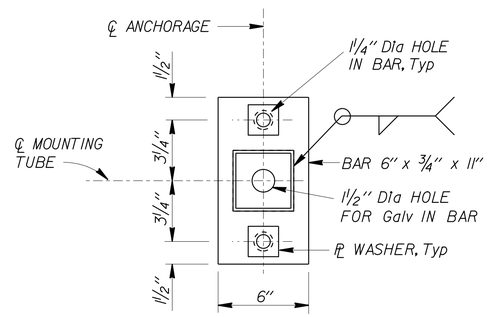

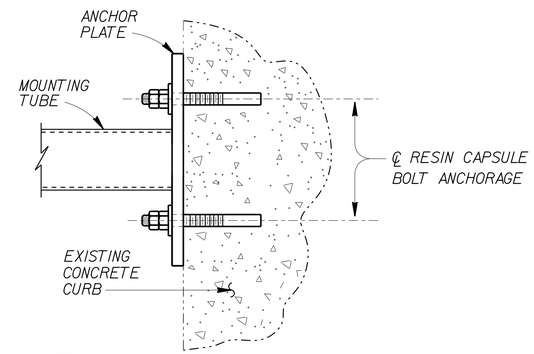

ANCHOR PLATE DETAIL
DETAIL D

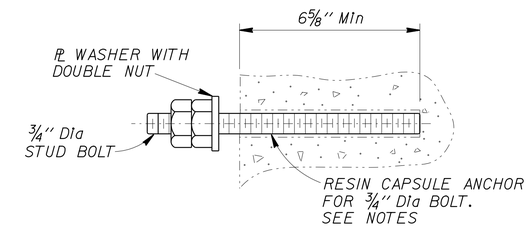

RESIN CAPSULE BOLT ANCHORAGE

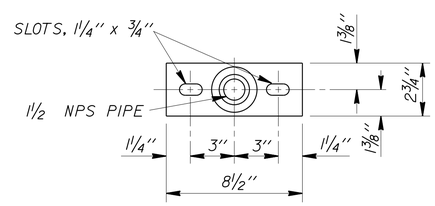

DETAIL E

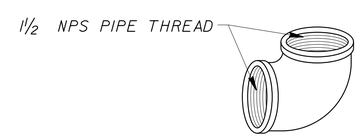

90° ELBOW
DETAIL F

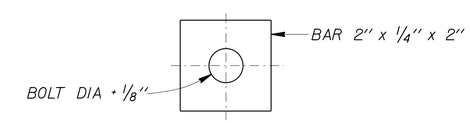

PLATE WASHER
FOR ALL SLOTTED HOLES OR WHERE NOTED

NOTE:
THE CONTRACTOR MUST VERIFY ALL CONTROLLING FIELD DIMENSIONS BEFORE ORDERING OR FABRICATING ANY MATERIAL.

STANDARD PLAN SHEET No.
DETAIL No.

NO SCALE

BRANCH CHIEF JEFF WOODY	DESIGN	BY JUAN JAUREGUI	CHECKED DEVANG VORA
	DETAILS	BY R. YEE	CHECKED JUAN JAUREGUI
	QUANTITIES	BY JUAN JAUREGUI	CHECKED DEVANG VORA

STATE OF CALIFORNIA
DEPARTMENT OF TRANSPORTATION

DIVISION OF ENGINEERING SERVICES
DESIGN AND TECHNICAL SERVICES
SPECIAL DESIGNS BRANCH
A

BRIDGE NO. 53-0466
POST MILE 9.22

BARHAM BLVD OVERCROSSING
FLASHING BEACON DETAILS

SDS-4

(ENGLISH) SPECIAL DESIGNS BRANCH BORDER SHEET (REV. 7-1-09)

ORIGINAL SCALE IN INCHES FOR REDUCED PLANS 0 1 2 3

UNIT: 3619
PROJECT ID & PHASE: 0700020928-1
CONTRACT No.: 07-287604

DISREGARD PRINTS BEARING EARLIER REVISION DATES

REVISION DATES 7/18/14 1/21/15 7/18/14 7/18/14 SHEET OF

FILE => /2014sd/07-287601/SDS-4

USERNAME => s127951 DATE PLOTTED => 24-SEP-2015 TIME PLOTTED => 14:44

M

Maint	MAINTENANCE
Max	MAXIMUM
MB	METAL BEAM
MBB	METAL BEAM BARRIER
MBGR	METAL BEAM GUARD RAILING
Med	MEDIAN
MGS	MIDWEST GUARDRAIL SYSTEM
MH	MANHOLE
Min	MINIMUM
Misc	MISCELLANEOUS
Misc I & S	MISCELLANEOUS IRON AND STEEL
Mkr	MARKER
Mod	MODIFIED,
	MODIFY
Mon	MONUMENT
MP	METAL PLATE
MPGR	METAL PLATE GUARD RAILING
MR	MOVEMENT RATING
MSE	MECHANICALLY STABILIZED EMBANKMENT
Mt	MOUNTAIN, MOUNT
Mtl	MATERIAL
MVP	MAINTENANCE VEHICLE PULLOUT

N

N	NORTH
NB	NORTHBOUND
No.	NUMBER (MUST HAVE PERIOD)
Nos.	NUMBERS (MUST HAVE PERIOD)
NPS	NOMINAL PIPE SIZE
NS	NEAR SIDE
NSP	NEW STANDARD PLAN
NTS	NOT TO SCALE

O

Oblr	OBLITERATE
OC	OVERCROSSING
OD	OUTSIDE DIAMETER
OF	OUTSIDE FACE
OG	ORIGINAL GROUND
OGAC	OPEN GRADED ASPHALT CONCRETE
OGFC	OPEN GRADED FRICTION COURSE
OH	OVERHEAD
OHWM	ORDINARY HIGH WATER MARK
O-O	OUT TO OUT
Opp	OPPOSITE
OSD	OVERSIDE DRAIN

P

p	PAGE
PAP	PERFORATED ALUMINUM PIPE
PB	PULL BOX
PC	POINT OF CURVATURE,
	PRECAST
PCC	POINT OF COMPOUND CURVE,
	PORTLAND CEMENT CONCRETE
PCMS	PORTABLE CHANGEABLE MESSAGE SIGN
PCP	PERFORATED CONCRETE PIPE,
	PRESTRESSED CONCRETE PIPE
PCVC	POINT OF COMPOUND VERTICAL CURVE
PEC	PERMIT TO ENTER AND CONSTRUCT
Ped	PEDESTRIAN
Ped OC	PEDESTRIAN OVERCROSSING
Ped UC	PEDESTRIAN UNDERCROSSING
Perm Mtl	PERMEABLE MATERIAL

P continued

PG	PROFILE GRADE
PI	POINT OF INTERSECTION
PJP	PARTIAL JOINT PENETRATION
Pkwy	PARKWAY
ℙ,PL	PLATE
P/L	PROPERTY LINE
PM	POST MILE,
	TIME FROM NOON TO MIDNIGHT
PN	PAVING NOTCH
POC	POINT OF HORIZONTAL CURVE
POT	POINT OF TANGENT
POVC	POINT OF VERTICAL CURVE
PP	PIPE PILE,
	PLASTIC PIPE,
	POWER POLE
PPL	PREFORMED PERMEABLE LINER
PPP	PERFORATED PLASTIC PIPE
PRC	POINT OF REVERSE CURVE
PRF	PAVEMENT REINFORCING FABRIC
PRVC	POINT OF REVERSE VERTICAL CURVE
PS&E	PLANS, SPECIFICATIONS AND ESTIMATES
PS, P/S	PRESTRESSED
PSP	PERFORATED STEEL PIPE
PT	POINT OF TANGENCY
PVC	POLYVINYL CHLORIDE
Pvmt	PAVEMENT

Q

Qty	QUANTITY

R

R	RADIUS
R & D	REMOVE AND DISPOSE
R & S	REMOVE AND SALVAGE
R/C	RATE OF CHANGE
RCA	REINFORCED CONCRETE ARCH
RCB	REINFORCED CONCRETE BOX
RCP	REINFORCED CONCRETE PIPE
RCPA	REINFORCED CONCRETE PIPE ARCH
Rd	ROAD
Reinf	REINFORCED,
	REINFORCEMENT,
	REINFORCING
Rel	RELOCATE
Repl	REPLACEMENT
Ret	RETAINING
Rev	REVISED, REVISION
Rdwy	ROADWAY
RHMA	RUBBERIZED HOT MIX ASPHALT
Riv	RIVER
RM	ROAD-MIXED
RP	RADIUS POINT,
	REFERENCE POINT
RR	RAILROAD
RSP	ROCK SLOPE PROTECTION,
	REVISED STANDARD PLAN
Rt	RIGHT
Rte	ROUTE
RW	REDWOOD,
	RETAINING WALL
R/W	RIGHT OF WAY
Rwy	RAILWAY

S

S	SOUTH,
	SUPPLEMENT
SAE	STRUCTURE APPROACH EMBANKMENT
Salv	SALVAGE
SAPP	STRUCTURAL ALUMINUM PLATE PIPE
SB	SOUTHBOUND
SC	SAND CUSHION
SCSP	SLOTTED CORRUGATED STEEL PIPE
SD	STORM DRAIN
Sec	SECOND,
	SECTION
Sep	SEPARATION
SG	SUBGRADE
Shld	SHOULDER
Sht	SHEET
Sim	SIMILAR
℄	STATION LINE
SM	SELECTED MATERIAL
Spec	SPECIAL,
	SPECIFICATIONS
SPP	SLOTTED PLASTIC PIPE
SS	SLOPE STAKE
SSBM	STRAP AND SADDLE BRACKET METHOD
SSD	STRUCTURAL SECTION DRAIN
SSPA	STRUCTURAL STEEL PLATE ARCH
SSPP	STRUCTURAL STEEL PLATE PIPE
SSPPA	STRUCTURAL STEEL PLATE PIPE ARCH
SSRP	STEEL SPIRAL RIB PIPE
St	STREET
Sta	STATION
STBB	SINGLE THRIE BEAM BARRIER
Std	STANDARD
Str	STRUCTURE
Surf	SURFACING
SW	SIDEWALK,
	SOUND WALL
Swr	SEWER
Sym	SYMMETRICAL
S4S	SURFACE 4 SIDES

T

T	SEMI-TANGENT
Tan	TANGENT
TBB	THRIE BEAM BARRIER
Tbr	TIMBER
TC	TOP OF CURB
TCB	TRAFFIC CONTROL BOX
TCE	TEMPORARY CONSTRUCTION EASEMENT
Tel	TELEPHONE
Temp	TEMPORARY
TG	TOP OF GRADE
Tot	TOTAL
TP	TELEPHONE POLE
TPB	TREATED PERMEABLE BASE
TPM	TREATED PERMEABLE MATERIAL
Trans	TRANSITION

T continued

TS	TRANSVERSE,
	TRAFFIC SIGNAL,
	TUBULAR STEEL
Typ	TYPICAL

U

UC	UNDERCROSSING
UD	UNDERDRAIN
UG	UNDERGROUND
UON	UNLESS OTHERWISE NOTED
UP	UNDERPASS

V

V	VALVE,
	DESIGN SPEED
Var	VARIABLE,
	VARIES
VC	VERTICAL CURVE
VCP	VITRIFIED CLAY PIPE
Vert	VERTICAL
Via	VIADUCT
Vol	VOLUME

W

W	WEST,
	WIDTH
WB	WESTBOUND
WH	WEEP HOLE
WM	WIRE MESH
WS	WATER SURFACE
WSP	WELDED STEEL PIPE
Wt	WEIGHT
WV	WATER VALVE
WW	WINGWALL
WWLOL	WINGWALL LAYOUT LINE

X

X Sec	CROSS SECTION
Xing	CROSSING

Y

Yr	YEAR
Yrs	YEARS

Dist	COUNTY	ROUTE	POST MILES TOTAL PROJECT	SHEET No.	TOTAL SHEETS
07	LA	110	8.5/9.4	40	62

Grace M. Tsushima
REGISTERED CIVIL ENGINEER

July 19, 2013
PLANS APPROVAL DATE

REGISTERED PROFESSIONAL ENGINEER Grace M. Tsushima No. C49814 Exp. 9-30-14 CIVIL STATE OF CALIFORNIA

THE STATE OF CALIFORNIA OR ITS OFFICERS OR AGENTS SHALL NOT BE RESPONSIBLE FOR THE ACCURACY OR COMPLETENESS OF SCANNED COPIES OF THIS PLAN SHEET.

TO ACCOMPANY PLANS DATED 6-29-15

UNIT OF MEASUREMENT SYMBOLS:

Some of the symbols used in the project plan quantity tables and in the Bid Item List are:

TABLE A

SYMBOL USED	DEFINITIONS
ACRE	ACRE
CF	CUBIC FOOT
CY	CUBIC YARD
EA	EACH
GAL	GALLON
LB	POUND
LF	LINEAR FOOT
SQFT	SQUARE FOOT
SQYD	SQUARE YARD
STA	100 FEET
TAB	TABLET
TON	2,000 POUNDS

Some of the symbols used in the plans other than in the project plan quantity tables are:

TABLE B

SYMBOL USED	DEFINITIONS
ksi	KIPS PER SQUARE INCH
ksf	KIPS PER SQUARE FOOT
psi	POUNDS PER SQUARE INCH
psf	POUNDS PER SQUARE FOOT
lb/ft^3, pcf	POUNDS PER CUBIC FOOT
tsf	TONS PER SQUARE FOOT
mph, MPH *	MILES PER HOUR
ø	NOMINAL DIAMETER
oz	OUNCE
lb	POUND
kip	1,000 POUNDS
cal	CALORIE
ft	FOOT OR FEET
gal	GALLON

* For use on a sign panel only

STATE OF CALIFORNIA
DEPARTMENT OF TRANSPORTATION

ABBREVIATIONS (SHEET 2 OF 2)

NO SCALE

RSP A10B DATED JULY 19, 2013 SUPERSEDES STANDARD PLAN A10B DATED MAY 20, 2011 - PAGE 2 OF THE STANDARD PLANS BOOK DATED 2010.

REVISED STANDARD PLAN RSP A10B

2010 REVISED STANDARD PLAN RSP A10B

6-7-13

Dist	COUNTY	ROUTE	POST MILES TOTAL PROJECT	SHEET No.	TOTAL SHEETS
07	LA	110	8.5/9.4	41	62

REGISTERED CIVIL ENGINEER

July 19, 2013
PLANS APPROVAL DATE

REGISTERED PROFESSIONAL ENGINEER Roberta L. McLaughlin No. C40375 Exp. 3-31-15 CIVIL STATE OF CALIFORNIA

THE STATE OF CALIFORNIA OR ITS OFFICERS OR AGENTS SHALL NOT BE RESPONSIBLE FOR THE ACCURACY OR COMPLETENESS OF SCANNED COPIES OF THIS PLAN SHEET.

TO ACCOMPANY PLANS DATED 6-29-15

2010 REVISED STANDARD PLAN RSP A20C

EXIT RAMP NEUTRAL AREA (GORE) TREATMENT

DETAIL 36

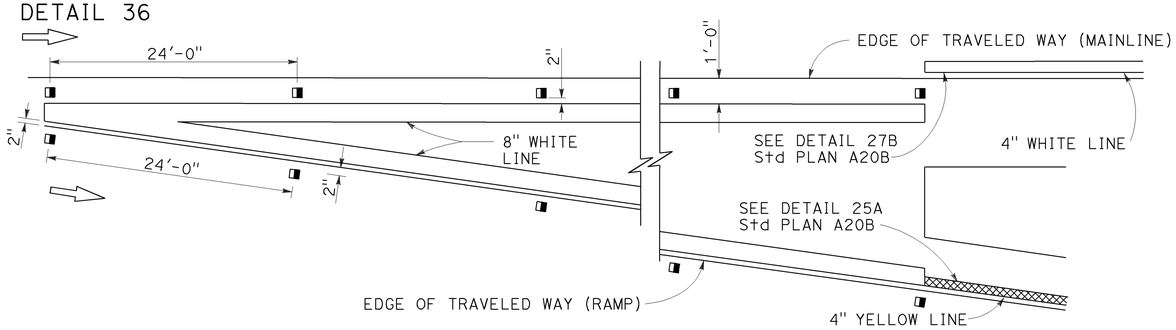

ENTRANCE RAMP NEUTRAL AREA (MERGE) TREATMENT

DETAIL 36A

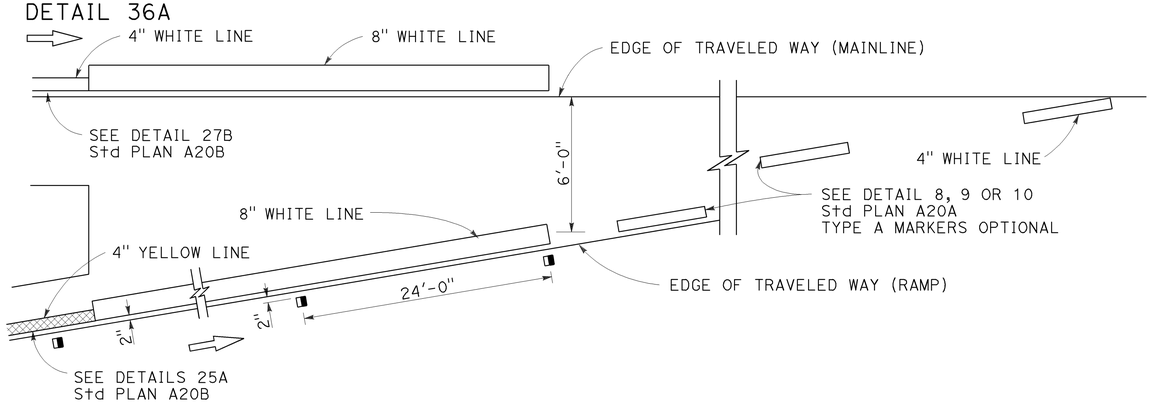

ENTRANCE RAMP NEUTRAL AREA (ACCELERATION LANE) TREATMENT

DETAIL 36B

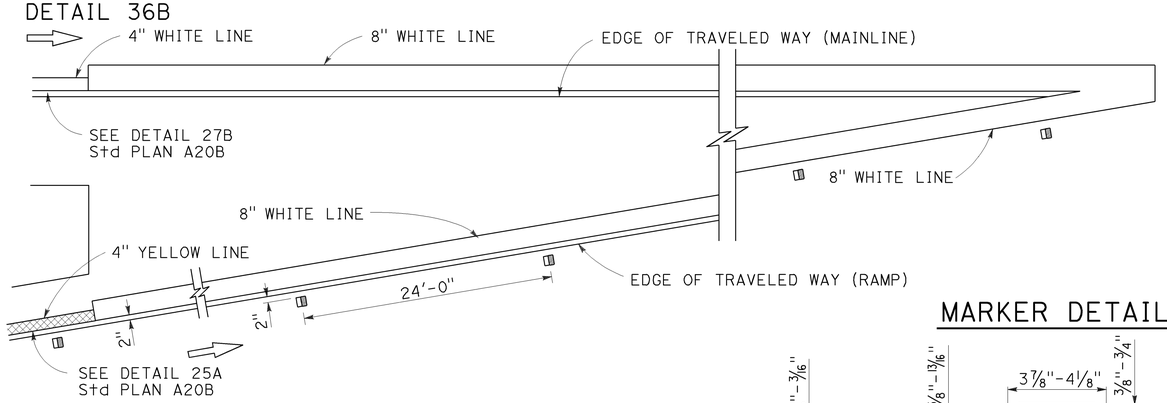

LANE DROP AT EXIT RAMPS

DETAIL 37

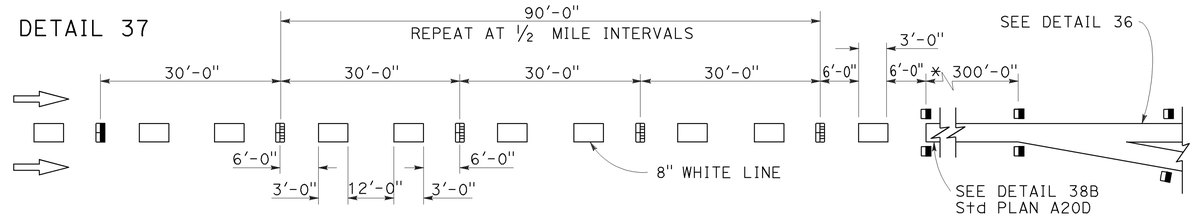

DETAIL 37A

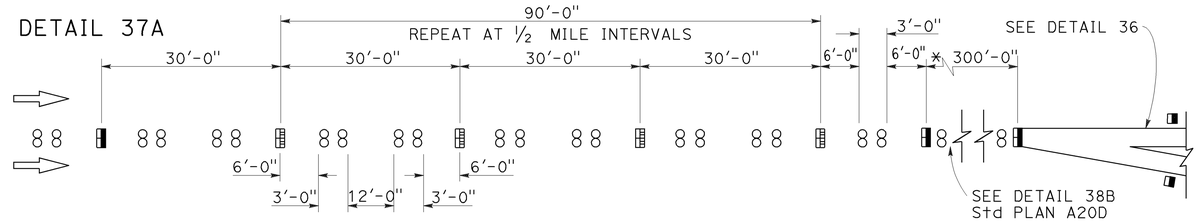

* The solid channelizing line shown may be omitted on short auxiliary lanes where weaving length is critical.

LANE DROP AT INTERSECTIONS

DETAIL 37B

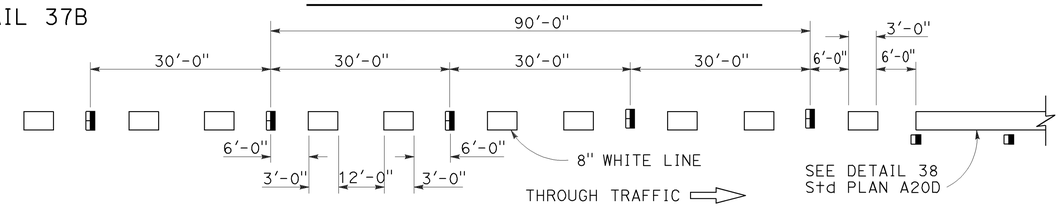

DETAIL 37C

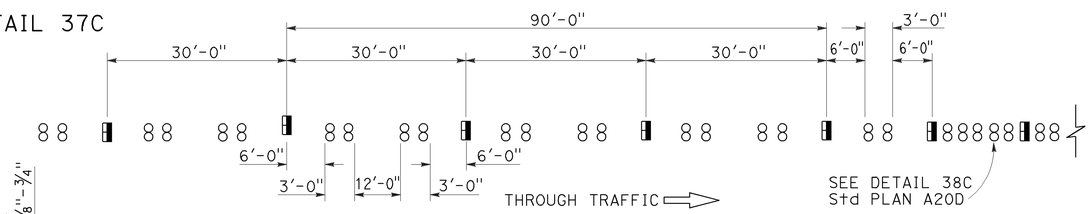

MARKER DETAILS

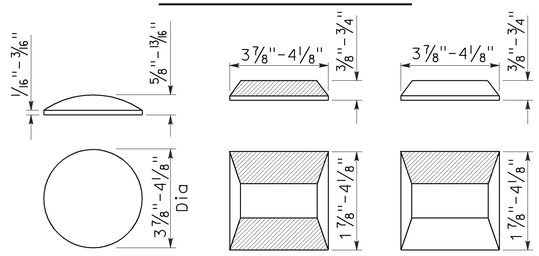

RETROREFLECTIVE FACE

LEGEND:

MARKERS

- ○ TYPE A WHITE NON-REFLECTIVE
- ⊟ TYPE C RED-CLEAR RETROREFLECTIVE
- ◨ TYPE G ONE-WAY CLEAR RETROREFLECTIVE

STATE OF CALIFORNIA
DEPARTMENT OF TRANSPORTATION

PAVEMENT MARKERS AND TRAFFIC LINE TYPICAL DETAILS

NO SCALE

RSP A20C DATED JULY 19, 2013 SUPERSEDES STANDARD PLAN A20C DATED MAY 20, 2011 - PAGE 11 OF THE STANDARD PLANS BOOK DATED 2010.

REVISED STANDARD PLAN RSP A20C

4-29-13

Dist	COUNTY	ROUTE	POST MILES TOTAL PROJECT	SHEET No.	TOTAL SHEETS
07	LA	110	8.5/9.4	42	62

REGISTERED CIVIL ENGINEER

July 18, 2014
PLANS APPROVAL DATE

REGISTERED PROFESSIONAL ENGINEER Glenn DeCou No. C34547 Exp. 9-30-15 CIVIL STATE OF CALIFORNIA

THE STATE OF CALIFORNIA OR ITS OFFICERS OR AGENTS SHALL NOT BE RESPONSIBLE FOR THE ACCURACY OR COMPLETENESS OF SCANNED COPIES OF THIS PLAN SHEET.

TO ACCOMPANY PLANS DATED 6-29-15

2010 REVISED STANDARD PLAN RSP A85

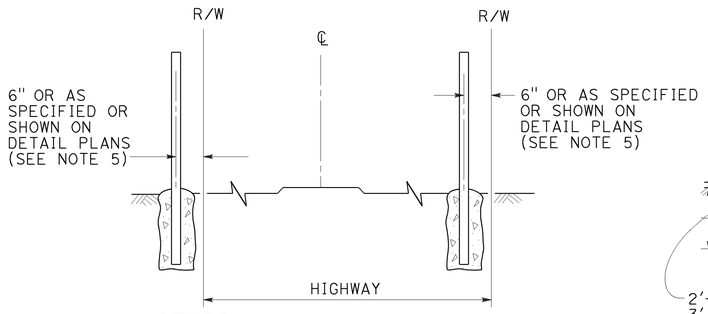

FENCE LOCATION

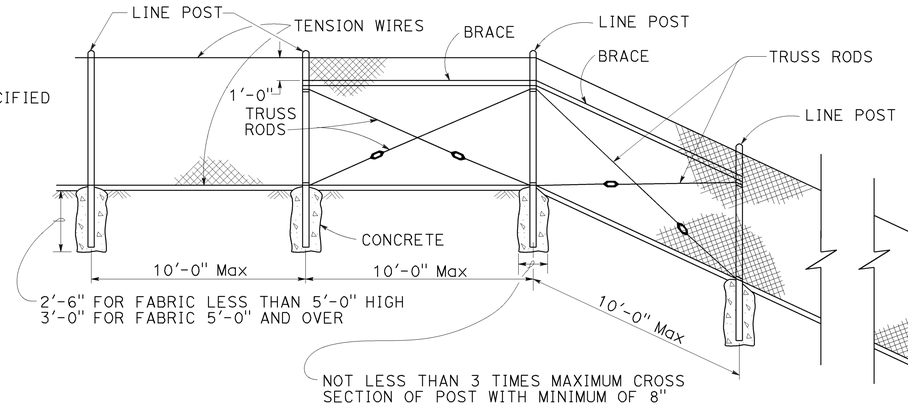

CHAIN LINK FENCE ON SHARP BREAK IN GRADE

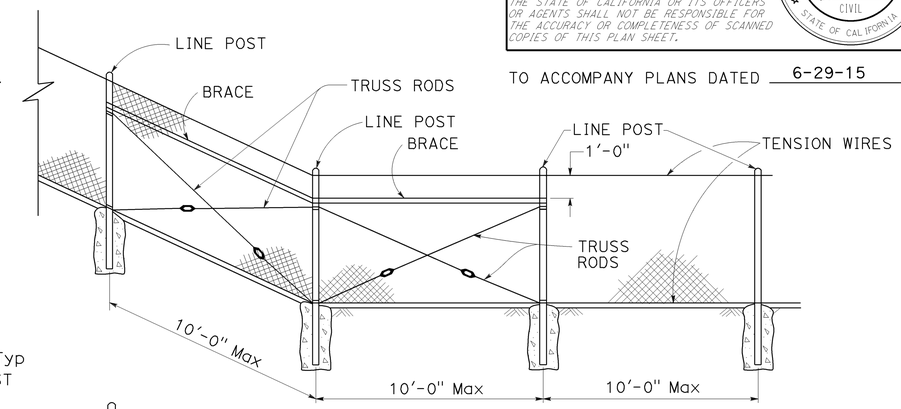

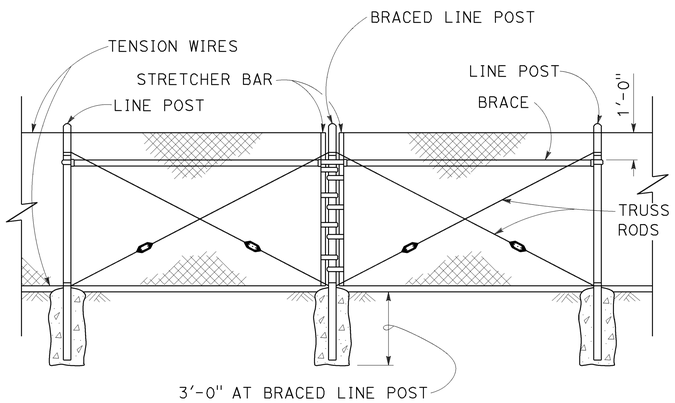

BRACED LINE POST INSTALLATION

Braced line post at intervals not exceeding 1000'

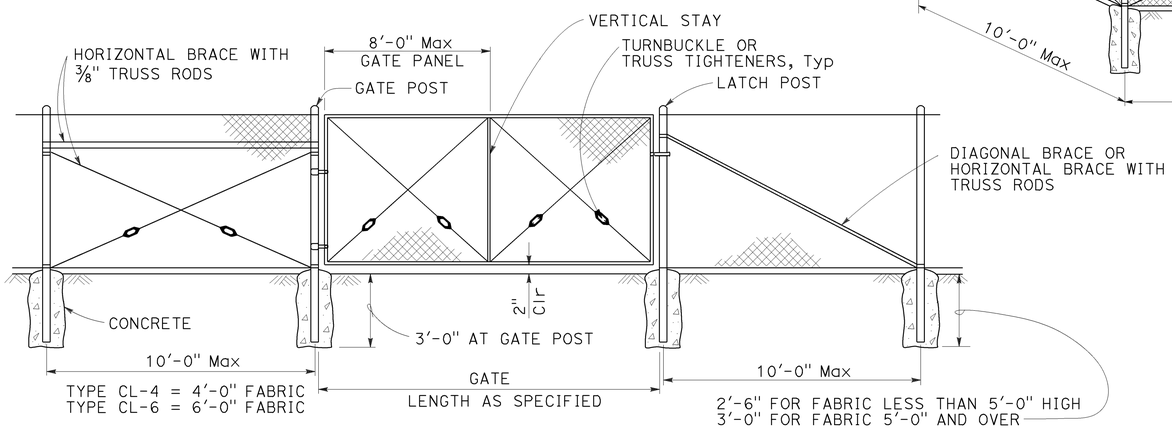

CHAIN LINK GATE INSTALLATION

GATE POST			
FENCE HEIGHT	GATE WIDTHS	ROUND OD PIPE	WEIGHT (lb/ft)
6'-0" AND LESS	UP THRU 6'-0"	2.875"	5.80
	OVER 6'-0" THRU 12'-0"	4.500"	10.80
	OVER 12'-0" THRU 18'-0"	5.563"	14.63
	OVER 18'-0" TO 24'-0" Max	6.625"	18.99
OVER 6'-0" TO 8'-0" Max	UP THRU 6'-0"	3.500"	7.58
	OVER 6'-0" THRU 12'-0"	5.563"	14.63
	OVER 12'-0" THRU 18'-0"	6.625"	18.99
	OVER 18'-0" TO 24'-0" Max	8.625"	28.58

Above post dimensions and weights are minimums. Larger sizes may be used upon approval.

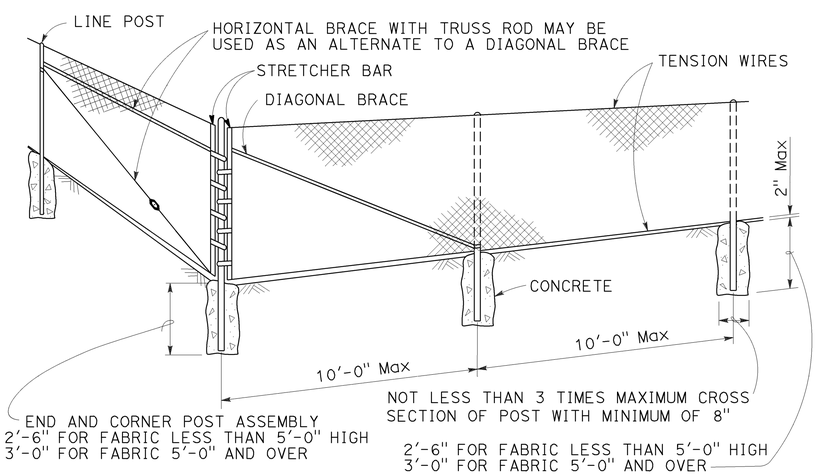

CORNER POST

NOTES:

1. The table below shows minimum sized posts and braces complying with the specifications. Larger or heavier post and brace sizes may be used upon approval.
2. Sections shown in the tables must also comply with the strength requirements and other provisions of the Specifications.
3. Other sections which comply with the strength requirements and other provisions of the Specifications may be used upon approval.
4. Options exercised shall be uniform on any one project.
5. Offset to be 2'-0" at monument locations, measured at right angles to R/W lines. Taper to achieve offset to be at least 20'-0" long.
6. See Revised Standard Plan RSP A85B for Brace, Stretcher Bar, and Truss Tightener Details.

TYPICAL MEMBER DIMENSIONS (See Notes)										
FENCE HEIGHT	LINE POSTS				END, LATCH AND CORNER POSTS		BRACES			
	ROUND OD PIPE	WEIGHT (lb/ft)	ROLL FORMED SECTION	ROLL FORMED WEIGHT (lb/ft)	ROUND OD PIPE	WEIGHT (lb/ft)	ROUND OD PIPE	WEIGHT (lb/ft)	ROLL FORMED SECTION	ROLL FORMED WEIGHT (lb/ft)
6'-0" AND LESS	1.900"	2.72	1.875" x 1.625"	1.85	2.375"	3.65	1.66"	2.27	1.625" x 1.25"	1.35
OVER 6'-0" TO 8'-0" Max	2.375"	3.65	2.25" x 1.70"	2.78	2.875"	5.80	1.66"	2.27	1.625" x 1.25"	1.35

STATE OF CALIFORNIA
DEPARTMENT OF TRANSPORTATION

CHAIN LINK FENCE

NO SCALE

RSP A85 DATED JULY 18, 2014 SUPERSEDES STANDARD PLAN A85
DATED MAY 20, 2011 - PAGE 112 OF THE STANDARD PLANS BOOK DATED 2010.

REVISED STANDARD PLAN RSP A85

7-1-14

Dist	COUNTY	ROUTE	POST MILES TOTAL PROJECT	SHEET No.	TOTAL SHEETS
07	LA	110	8.5/9.4	43	62

REGISTERED CIVIL ENGINEER

October 19, 2012
PLANS APPROVAL DATE

REGISTERED PROFESSIONAL ENGINEER
Glenn DeCou
No. C34547
Exp. 9-30-13
CIVIL
STATE OF CALIFORNIA

THE STATE OF CALIFORNIA OR ITS OFFICERS OR AGENTS SHALL NOT BE RESPONSIBLE FOR THE ACCURACY OR COMPLETENESS OF SCANNED COPIES OF THIS PLAN SHEET.

TO ACCOMPANY PLANS DATED 6-29-15

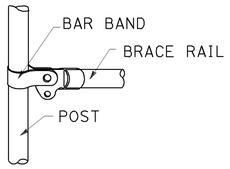

BRACE RAIL

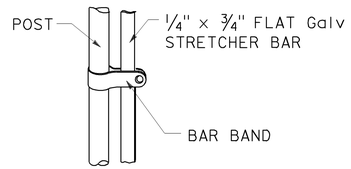

STRETCHER BAR

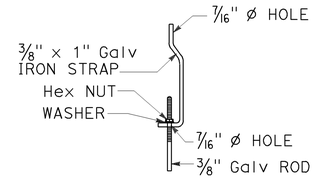

TRUSS TIGHTENER

NOTES:

1. All material for abutment connection to be galvanized.
2. The chain link fabric shall be replaced by barbed wire strands at 12" maximum centers between the double posts.
3. When the width of the culvert makes it necessary to anchor a post to the top of the culvert, a cast iron shoe or other device approved by the Engineer shall be used.
4. Fencing over stream and around headwall may also use Barbed Wire or Wire Mesh fencing with either wood post or steel post installation.
5. See Standard Plan A85 for Chain Link fence dimensions. See Standard Plan A86 for Barbed Wire and Wire Mesh fence dimensions and for wood post and steel post installation.

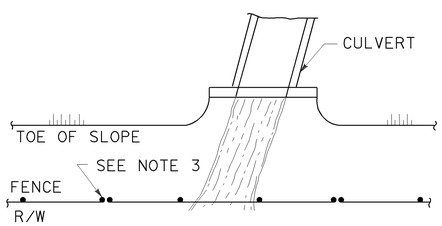

PLAN

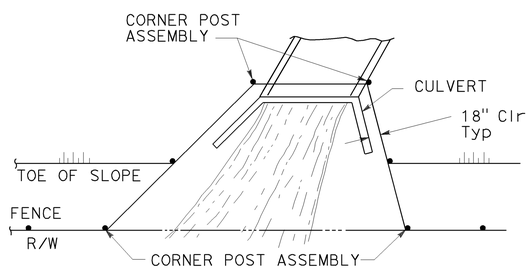

PLAN

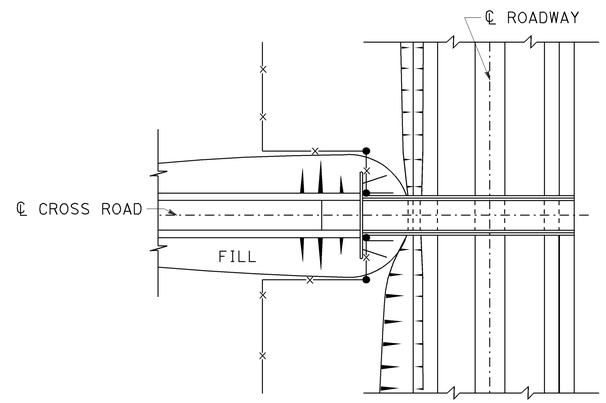

PLAN OF ROADWAY - OVERCROSSING

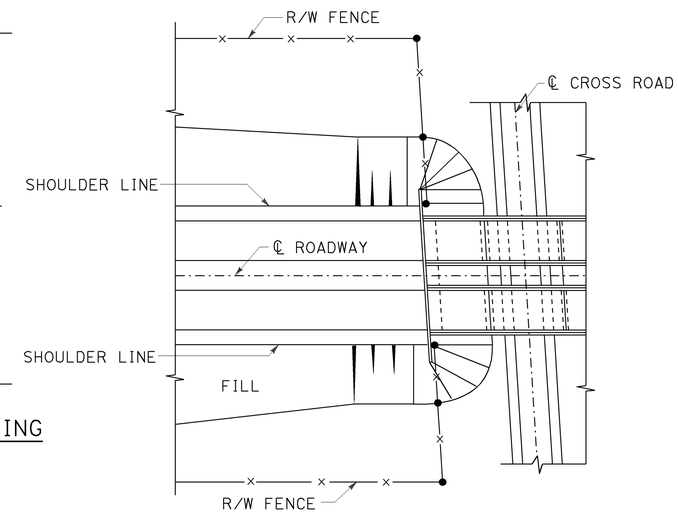

PLAN OF ROADWAY - UNDERCROSSING

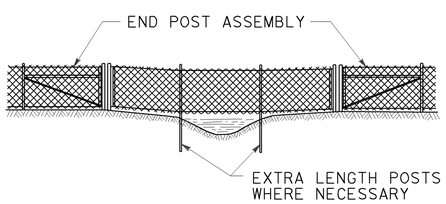

ELEVATION

INSTALLATION OVER STREAM

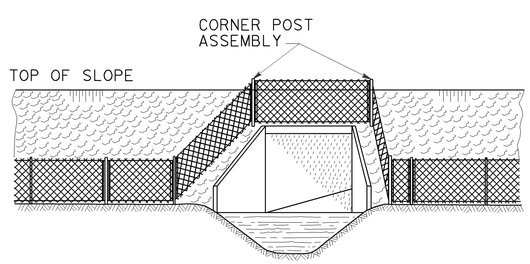

ELEVATION

INSTALLATION AROUND HEADWALL

See Note 4

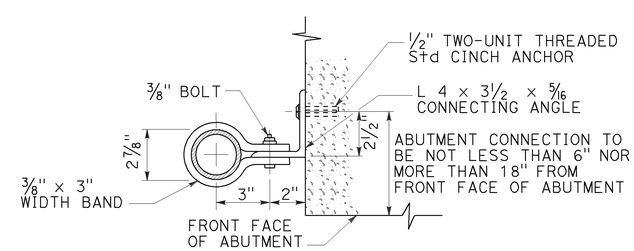

ABUTMENT CONNECTION

TYPICAL INSTALLATION AT BRIDGES

STATE OF CALIFORNIA
DEPARTMENT OF TRANSPORTATION

CHAIN LINK FENCE DETAILS

NO SCALE

RSP A85B DATED OCTOBER 19, 2012 SUPERSEDES STANDARD PLAN A85B
DATED MAY 20, 2011 - PAGE 114 OF THE STANDARD PLANS BOOK DATED 2010.

REVISED STANDARD PLAN RSP A85B

2010 REVISED STANDARD PLAN RSP A85B

7-19-12

Dist	COUNTY	ROUTE	POST MILES TOTAL PROJECT	SHEET No.	TOTAL SHEETS
07	LA	110	8.5/9.4	44	62

REGISTERED CIVIL ENGINEER

July 19, 2013
PLANS APPROVAL DATE

REGISTERED PROFESSIONAL ENGINEER
Gurinderpal Bhullar
No. C48815
Exp. 9-30-14
CIVIL
STATE OF CALIFORNIA

THE STATE OF CALIFORNIA OR ITS OFFICERS OR AGENTS SHALL NOT BE RESPONSIBLE FOR THE ACCURACY OR COMPLETENESS OF SCANNED COPIES OF THIS PLAN SHEET.

TO ACCOMPANY PLANS DATED 6-29-15

TABLE 1

TAPER LENGTH CRITERIA AND CHANNELIZING DEVICE SPACING

SPEED (S)	MINIMUM TAPER LENGTH * FOR WIDTH OF OFFSET 12 FEET (W)				MAXIMUM CHANNELIZING DEVICE SPACING		
					X	Y	Z **
	TANGENT 2L	MERGING L	SHIFTING L/2	SHOULDER L/3	TAPER	TANGENT	CONFLICT
mph	ft	ft	ft	ft	ft	ft	ft
20	160	80	40	27	20	40	10
25	250	125	63	42	25	50	12
30	360	180	90	60	30	60	15
35	490	245	123	82	35	70	17
40	640	320	160	107	40	80	20
45	1080	540	270	180	45	90	22
50	1200	600	300	200	50	100	25
55	1320	660	330	220	55	110	27
60	1440	720	360	240	60	120	30
65	1560	780	390	260	65	130	32
70	1680	840	420	280	70	140	35

* - For other offsets, use the following merging taper length formula for L:
For speed of 40 mph or less, $L = WS^2/60$
For speed of 45 mph or more, $L = WS$

Where: L = Taper length in feet
W = Width of offset in feet
S = Posted speed limit, off-peak 85th-percentile speed prior to work starting, or the anticipated operating speed in mph

** - Use for taper and tangent sections where there are no pavement markings or where there is a conflict between existing pavement markings and channelizers (CA).

TABLE 2

LONGITUDINAL BUFFER SPACE AND FLAGGER STATION SPACING

SPEED *	Min D **	DOWNGRADE Min D ***		
		-3%	-6%	-9%
mph	ft	ft	ft	ft
20	115	116	120	126
25	155	158	165	173
30	200	205	215	227
35	250	257	271	287
40	305	315	333	354
45	360	378	400	427
50	425	446	474	507
55	495	520	553	593
60	570	598	638	686
65	645	682	728	785
70	730	771	825	891

* - Speed is posted speed limit, off-peak 85th-percentile speed prior to work starting, or the anticipated operating speed in mph

** - Longitudinal buffer space or flagger station spacing

*** - Use on sustained downgrade steeper than -3 percent and longer than 1 mile.

TABLE 3

ADVANCE WARNING SIGN SPACING

ROAD TYPE	DISTANCE BETWEEN SIGNS *		
	A	B	C
	ft	ft	ft
URBAN - 25 mph OR LESS	100	100	100
URBAN - MORE THAN 25 mph TO 40 mph	250	250	250
URBAN - MORE THAN 40 mph	350	350	350
RURAL	500	500	500
EXPRESSWAY / FREEWAY	1000	1500	2640

* - The distances are approximate, are intended for guidance purposes only, and should be applied with engineering judgment. These distances should be adjusted by the Engineer for field conditions, if necessary, by increasing or decreasing the recommmended distances.

STATE OF CALIFORNIA
DEPARTMENT OF TRANSPORTATION

TRAFFIC CONTROL SYSTEM TABLES FOR LANE AND RAMP CLOSURES

NO SCALE

RSP T9 DATED JULY 19, 2013 SUPERSEDES RSP T9 DATED APRIL 19, 2013 THAT SUPPLEMENTS THE STANDARD PLANS BOOK DATED 2010.

REVISED STANDARD PLAN RSP T9

2010 REVISED STANDARD PLAN RSP T9

4-30-13

TO ACCOMPANY PLANS DATED 6-29-15

Dist	COUNTY	ROUTE	POST MILES TOTAL PROJECT	SHEET No.	TOTAL SHEETS
07	LA	110	8.5/9.4	45	62

REGISTERED CIVIL ENGINEER

April 19, 2013
PLANS APPROVAL DATE

REGISTERED PROFESSIONAL ENGINEER Gurinderpal Bhullar No. C48815 Exp. 9-30-14 CIVIL STATE OF CALIFORNIA

THE STATE OF CALIFORNIA OR ITS OFFICERS OR AGENTS SHALL NOT BE RESPONSIBLE FOR THE ACCURACY OR COMPLETENESS OF SCANNED COPIES OF THIS PLAN SHEET.

NOTES:

See Revised Standard Plan RSP T9 for tables.

Use cone spacing X for taper segment, Y for tangent segment or Z for conflict situations, as approriate, per Table 1, unless X, Y, or Z cone spacing is shown on this sheet.

Unless otherwise specified in the special provisions, all temporary warning signs shall have black legend on fluorescent orange background.

California codes are designated by (CA). Otherwise, Federal (MUTCD) codes are shown.

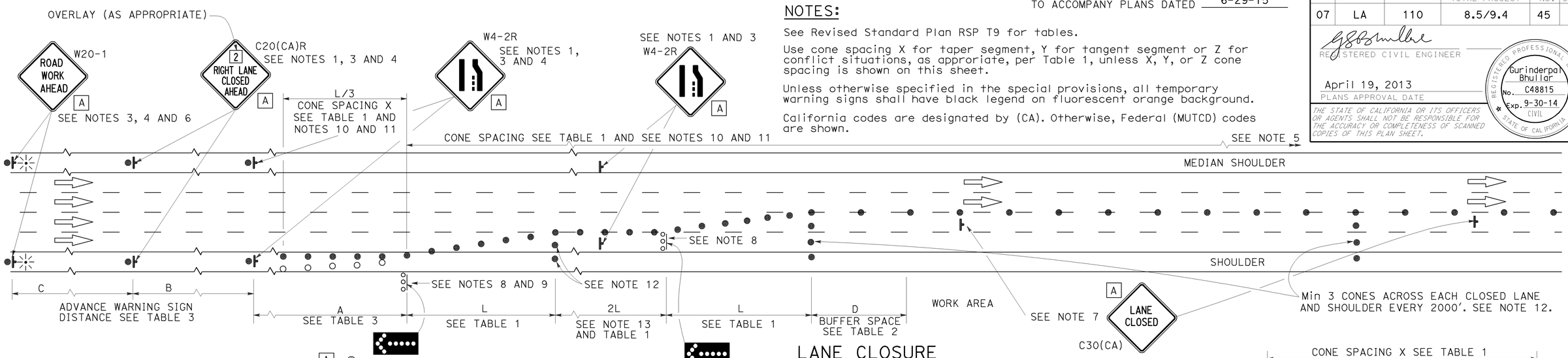

LANE CLOSURE

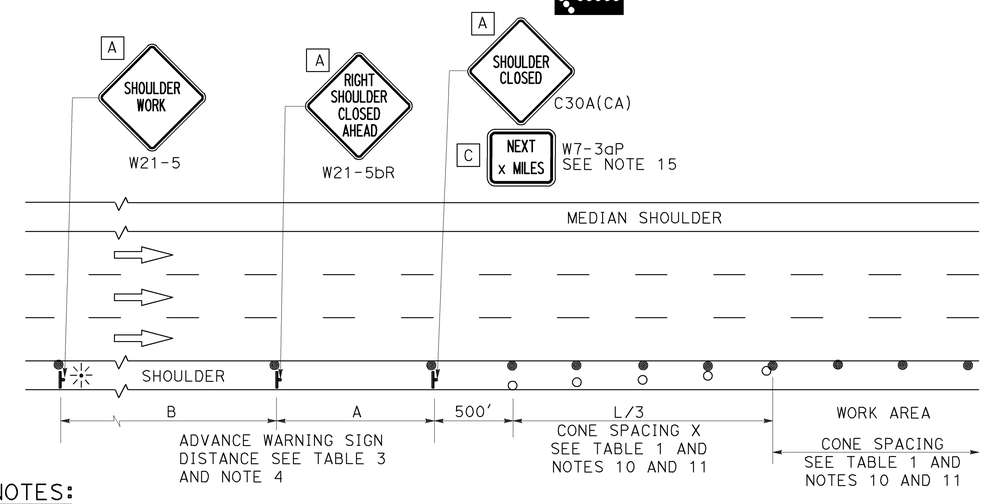

SHOULDER CLOSURE

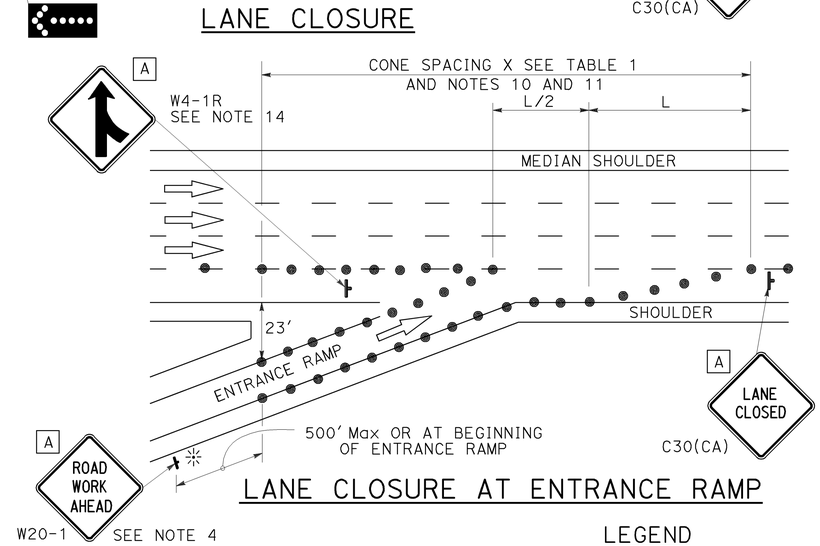

LANE CLOSURE AT ENTRANCE RAMP

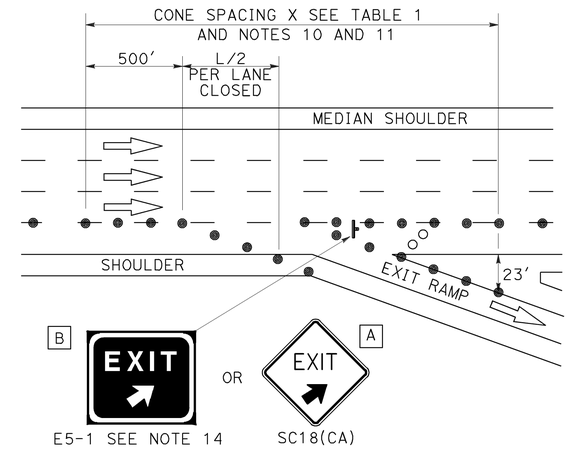

LANE CLOSURE AT EXIT RAMP

NOTES:

1. Median lane closures shall conform to the details as shown except that C20(CA)L and W4-2L signs shall be used.
2. At least one person shall be assigned to provide full time maintenance of traffic control devices for lane closures.
3. Duplicate sign installations are not required:
   a) On opposite shoulder if at least one-half of the available lanes remain open to traffic.
   b) In the median if the width of the median shoulder is less than 8' and the outside lanes are to be closed.
4. Each advance warning sign on each side of the roadway shall be equipped with at least two flags for daytime closure. Each flag shall be at least 16" x 16" in size and shall be orange or fluorescent red-orange in color. Flashing beacons shall be placed at the locations indicated for lane closure during hours of darkness.
5. A G20-2 "END ROAD WORK" sign, with minimum size of 48" x 24" as appropriate, shall be placed at the end of the lane closure unless the end of work area is obvious or ends within a larger project's limits.
6. If the W20-1 sign would follow within 2000' of a stationary W20-1 or G20-1 "ROAD WORK NEXT _____ MILES", use a C20(CA) sign for the first advance warning sign.
7. Place a C30(CA) sign every 2000' throughout length of lane closure.
8. One flashing arrow sign for each lane closed. The flashing arrow signs shall be Type I.
9. A minimum 1500' of sight distance shall be provided where possible for vehicles approaching the first flashing arrow sign. Lane closures shall not begin at top of crest vertical curve or on a horizontal curve.
10. All cones used for lane closures during the hours of darkness shall be fitted with retroreflective bands (or sleeves) as specified in the specifications.
11. Portable delineators, placed at one-half the spacing indicated for traffic cones may be used instead of cones for daytime closures only.
12. Unless otherwise specified in the special provisions, a minimum of 3 cones shall be placed transversely across each closed lane and shoulder at each location where a taper across a traffic lane ends and every 2000' as shown on the "Lane Closure" detail. Two Type II barricades may be used instead of the 3 cones. The transverse alignment of the cones or barricades on the closed shoulder may be shifted from the transverse alignment to provide access to the work.
13. Unless otherwise specified in the special provisions, the 2L tangent shown along lane lines shall be used between the L tapers required for each closed traffic lane.
14. Unless otherwise specified in the special provisions, the E5-1 or SC18(CA) and W4-1 signs shall be used as shown.
15. A W7-3aP "NEXT____ MILES" plaque must be used if theshoulder closure extends beyond the distance that can be perceived by road users.

LEGEND

- TRAFFIC CONE
- TRAFFIC CONE (OPTIONAL TAPER)
- TEMPORARY TRAFFIC CONTROL SIGN
- FLASHING ARROW SIGN (FAS)
- FAS SUPPORT OR TRAILER
- PORTABLE FLASHING BEACON

SIGN PANEL SIZE (Min)

A	48" x 48"
B	72" x 60"
C	36" x 30"

STATE OF CALIFORNIA
DEPARTMENT OF TRANSPORTATION

TRAFFIC CONTROL SYSTEM FOR LANE CLOSURE ON FREEWAYS AND EXPRESSWAYS

NO SCALE

RSP T10 DATED APRIL 19, 2013 SUPERSEDES STANDARD PLAN T10 DATED MAY 20, 2011 - PAGE 237 OF THE STANDARD PLANS BOOK DATED 2010.

REVISED STANDARD PLAN RSP T10

2010 REVISED STANDARD PLAN RSP T10

12-18-12

TO ACCOMPANY PLANS DATED 6-29-15

Dist	COUNTY	ROUTE	POST MILES TOTAL PROJECT	SHEET No.	TOTAL SHEETS
07	LA	110	8.5/9.4	46	62

REGISTERED CIVIL ENGINEER

April 19, 2013
PLANS APPROVAL DATE

REGISTERED PROFESSIONAL ENGINEER Gurinderpal Bhullar No. C48815 Exp. 9-30-14 CIVIL STATE OF CALIFORNIA

THE STATE OF CALIFORNIA OR ITS OFFICERS OR AGENTS SHALL NOT BE RESPONSIBLE FOR THE ACCURACY OR COMPLETENESS OF SCANNED COPIES OF THIS PLAN SHEET.

NOTES: See Revised Standard Plan RSP T9 for tables.

Use cone spacing X for taper segment, Y for tangent segment or Z for conflict situations, as approriate, per Table 1, unless X, Y, or Z cone spacing is shown on this sheet.

Unless otherwise specified in the special provisions, all temporary warning signs shall have black legend on fluorescent orange background.

California codes are designated by (CA). Otherwise, Federal (MUTCD) codes are shown.

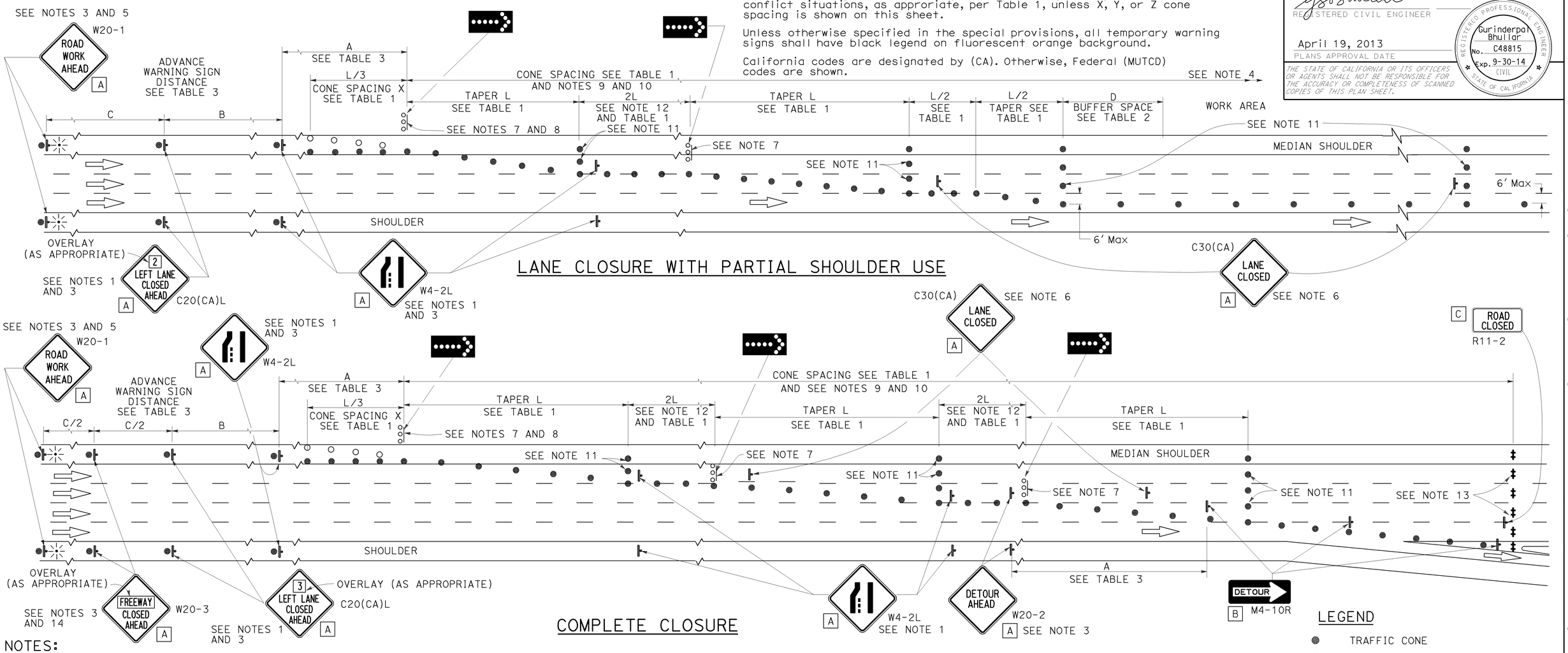

LANE CLOSURE WITH PARTIAL SHOULDER USE

COMPLETE CLOSURE

NOTES:

1. Lane closures on the right side using partial median shoulder as a traffic lane shall conform to the details as shown except that C20(CA)R and W4-2R signs shall be used.
2. At least one person shall be assigned to provide full time maintenance of traffic control devices for lane closures.
3. Each advance warning sign on each side of the roadway shall be equipped with at least two flags for daytime closure. Each flag shall be at least 16" X 16" in size and shall be orange or fluorescent red-orange in color. Flashing beacons shall be placed at the locations indicated for lane closure during hours of darkness.
4. A G20-2 "END ROAD WORK" sign, with minimum size of 48" x 24" as appropriate, shall be placed at the end of the lane closure unless the end of work area is obvious or ends within a larger project's limits.
5. If the W20-1 sign would follow within 2000' of a stationary W20-1 or G20-1 "ROAD WORK NEXT ___ MILES", use a C20(CA) sign for the first advance warning sign.
6. Place a C30(CA) sign every 2000' throughout length of lane closure.
7. One flashing arrow sign for each lane closed. The flashing arrow signs shall be Type I.
8. A minimum 1500' of sight distance shall be provided where possible for vehicles approaching the first flashing arrow sign. Lane closures shall not begin at the top of crest vertical curve or on a horizontal curve.
9. All cones used for lane closures during the hours of darkness shall be fitted with retroreflective bands (or sleeves) as specified in the specifications.
10. Portable delineators, placed at one-half the spacing indicated for traffic cones, may be used instead of cones for daytime closures only.
11. Unless otherwise specified in the special provisions, a minimum of 3 cones shall be placed transversely across each closed lane and shoulder at each location where a taper across a traffic lane ends and every 2000' as shown on the "Lane Closure With Partial Shoulder Use" detail. Two Type II barricades may be used instead of the 3 cones. The transverse alignment of the cones or barricades on the closed shoulder may be shifted from the transverse alignment to provide access to the work.
12. Unless otherwise specified in the special provisions, the 2L tangent shown along lane lines shall be used between the L tapers required for each closed traffic lane.
13. A minimum of Two Type II or III barricades shall be placed across each closed lane and shoulder at the location shown and every 2000' within the complete closure area. Within the complete closure area, the transverse alignment of the barricades on the closed shoulder may be shifted from the transverse alignment to provide access to the work.
14. When specified in the special provisions, a W20-2 "DETOUR AHEAD" sign is to be used in place of the W20-3 "FREEWAY CLOSED AHEAD" sign.

SIGN PANEL SIZE (Min)

A	48" x 48"
B	48" x 18"
C	48" x 30"

LEGEND

- TRAFFIC CONE
- TRAFFIC CONE (OPTIONAL TAPER)
- TEMPORARY TRAFFIC CONTROL SIGN
- FLASHING ARROW SIGN (FAS)
- FAS SUPPORT OR TRAILER
- PORTABLE FLASHING BEACON

STATE OF CALIFORNIA
DEPARTMENT OF TRANSPORTATION

TRAFFIC CONTROL SYSTEM FOR LANE CLOSURES ON FREEWAYS AND EXPRESSWAYS

NO SCALE

RSP T10A DATED APRIL 19, 2013 SUPERSEDES STANDARD PLAN T10A DATED MAY 20, 2011 - PAGE 238 OF THE STANDARD PLANS BOOK DATED 2010.

REVISED STANDARD PLAN RSP T10A

2010 REVISED STANDARD PLAN RSP T10A

12-18-12

Dist	COUNTY	ROUTE	POST MILES TOTAL PROJECT	SHEET No.	TOTAL SHEETS
07	LA	110	8.5/9.4	47	62

REGISTERED CIVIL ENGINEER

April 19, 2013
PLANS APPROVAL DATE

REGISTERED PROFESSIONAL ENGINEER Gurinderpal Bhullar No. C48815 Exp. 9-30-14 CIVIL STATE OF CALIFORNIA

THE STATE OF CALIFORNIA OR ITS OFFICERS OR AGENTS SHALL NOT BE RESPONSIBLE FOR THE ACCURACY OR COMPLETENESS OF SCANNED COPIES OF THIS PLAN SHEET.

TO ACCOMPANY PLANS DATED 6-29-15

TYPICAL RAMP CLOSURES

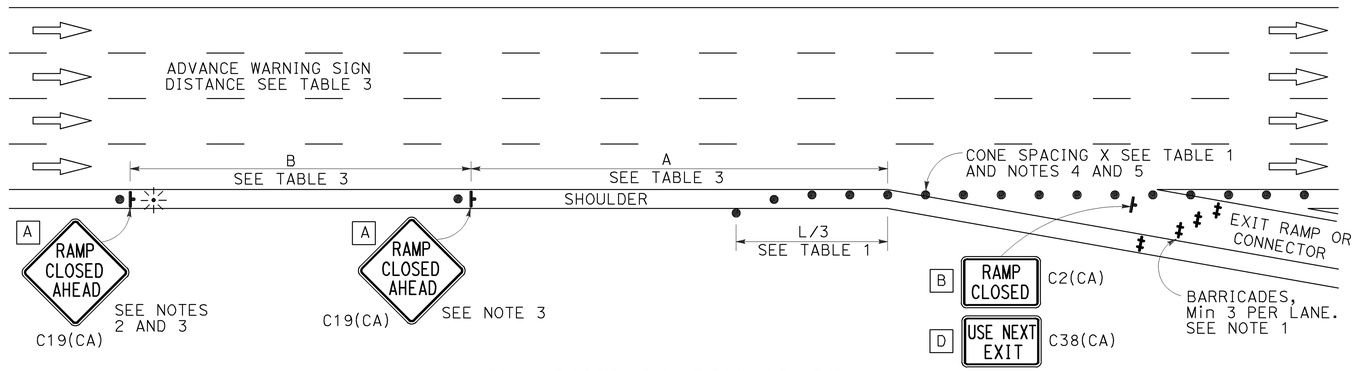

EXIT RAMP OR CONNECTOR

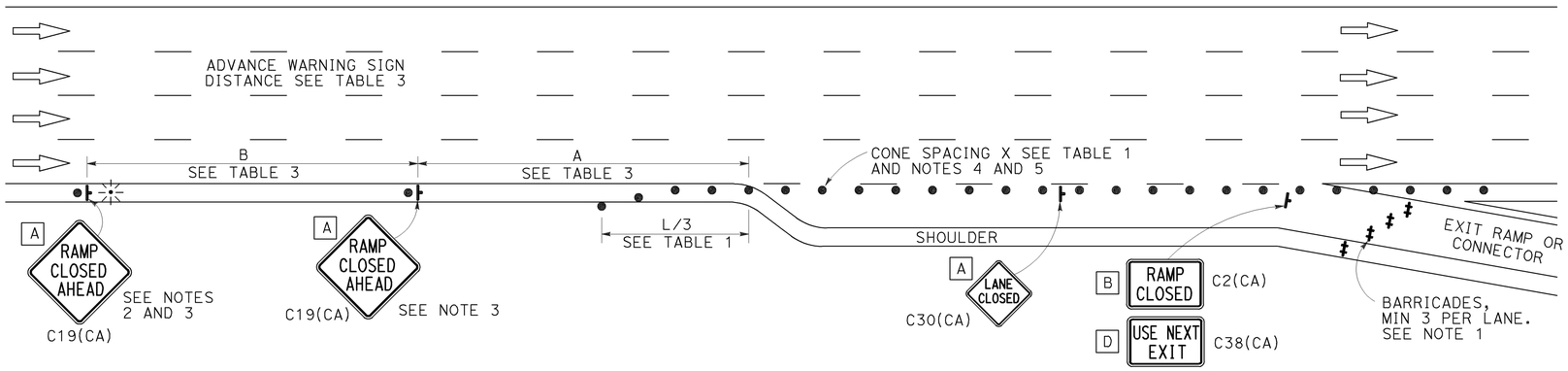

EXIT RAMP OR CONNECTOR WITH ADDITIONAL LANE

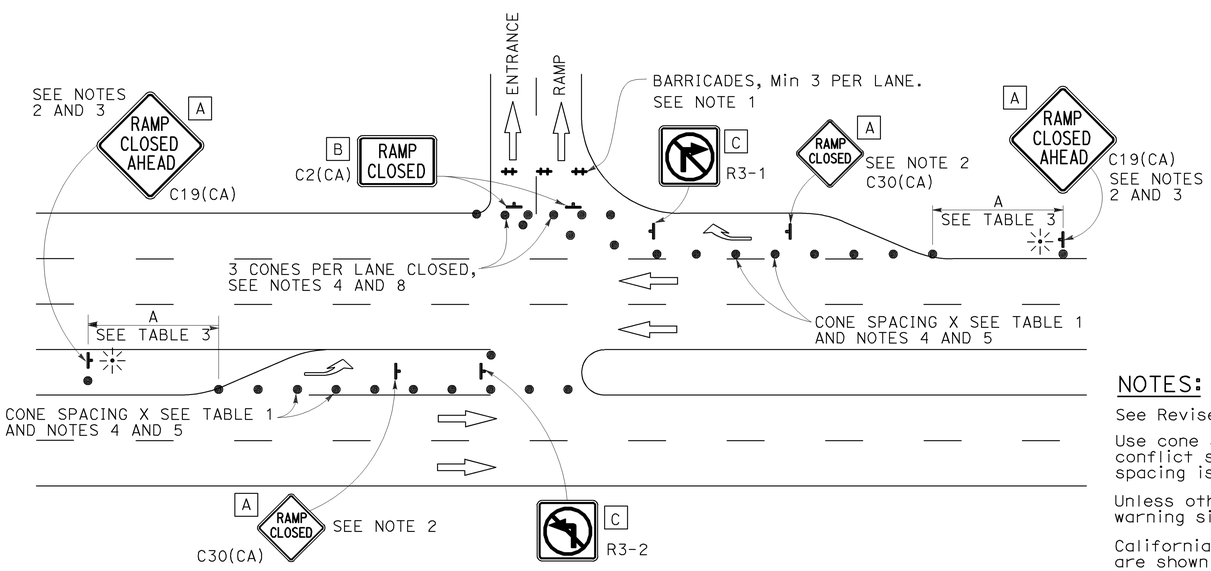

ENTRANCE RAMP WITH TURNING POCKETS

SIGN PANEL SIZE (Min)

- A 48" × 48"
- B 48" × 30"
- C 36" × 36"
- D 48" × 36"

LEGEND

- TRAFFIC CONE
- TEMPORARY TRAFFIC CONTROL SIGN
- BARRICADES
- PORTABLE FLASHING BEACON

NOTES:

1. Barricades shall be Type I, II, or III for closures lasting one week or less and Type III for closures lasting longer than one week.
2. In addition to placing the C19(CA) "RAMP CLOSED AHEAD" and C30(CA) "RAMP CLOSED" signs, black on orange overlay plates with the word "CLOSED" may be mounted, as directed by the Engineer, on all guide signs that refer to the closed ramp. The letter size on the overlay shall be the same as the guide sign.
3. Each advance C19(CA) "RAMP CLOSED AHEAD" sign shall be equipped with at least two flags for daytime closure. Each flag shall be at least 16" × 16" in size and shall be orange or fluorescent red-orange in color. A flashing beacon shall be placed on top of the first C19(CA) sign during hours of darkness.
4. All cones used for ramp closures during the hours of darkness shall be fitted with retroreflective bands (or sleeves) as specified in the specifications.
5. Portable delineators, placed at one-half the spacing indicated for traffic cones, may be used instead of cones for daytime ramp closures only.
6. At least one person shall be assigned to provide full time maintenance of traffic control devices, unless otherwise directed by the Engineer.
7. The existing "EXIT" signs shall be covered during ramp closures.
8. A minimum of 3 cones shall be placed transversely across each closed lane and shoulder.

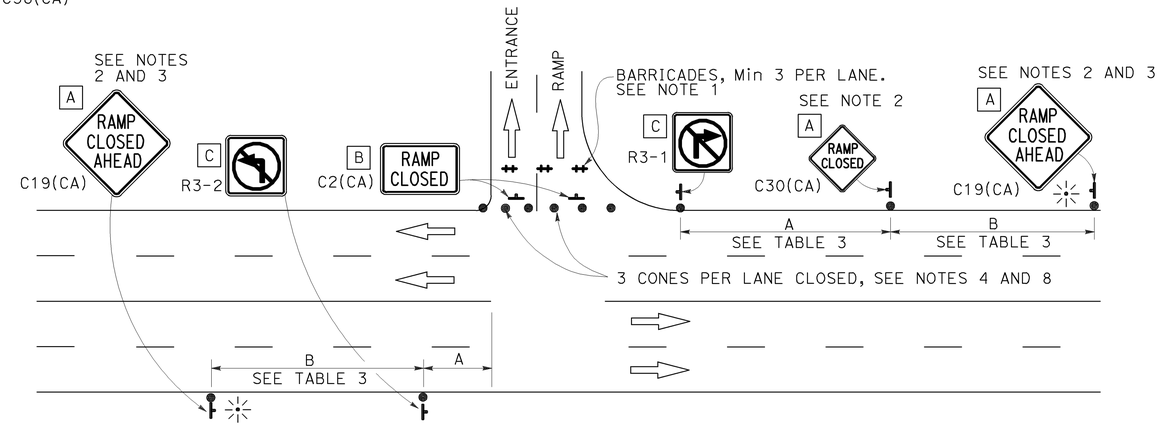

ENTRANCE RAMP WITHOUT TURNING POCKETS

NOTES:

See Revised Standard Plan RSP T9 for tables.

Use cone spacing X for taper segment, Y for tangent segment or Z for conflict situations, as approriate, per Table 1, unless X, Y, or Z cone spacing is shown on this sheet.

Unless otherwise specified in the special provisions, all temporary warning signs shall have black legend on fluorescent orange background.

California codes are designated by (CA). Otherwise, Federal (MUTCD) codes are shown.

STATE OF CALIFORNIA
DEPARTMENT OF TRANSPORTATION

TRAFFIC CONTROL SYSTEM FOR RAMP CLOSURE

NO SCALE

RSP T14 DATED APRIL 19, 2013 SUPERSEDES STANDARD PLAN T14
DATED MAY 20, 2011 - PAGE 242 OF THE STANDARD PLANS BOOK DATED 2010.

REVISED STANDARD PLAN RSP T14

2010 REVISED STANDARD PLAN RSP T14

12-18-12

Dist	COUNTY	ROUTE	POST MILES TOTAL PROJECT	SHEET No.	TOTAL SHEETS
07	LA	110	8.5/9.4	48	62

Theresa Gabriel
REGISTERED ELECTRICAL ENGINEER

July 19, 2013
PLANS APPROVAL DATE

REGISTERED PROFESSIONAL ENGINEER
Theresa Aziz Gabriel
No. E15129
Exp. 6-30-14
ELECTRICAL
STATE OF CALIFORNIA

THE STATE OF CALIFORNIA OR ITS OFFICERS OR AGENTS SHALL NOT BE RESPONSIBLE FOR THE ACCURACY OR COMPLETENESS OF SCANNED COPIES OF THIS PLAN SHEET.

TO ACCOMPANY PLANS DATED 6-29-15

LEGEND:

AB	ABANDON. IF APPLIED TO CONDUIT, REMOVE CONDUCTORS
BC	INSTALL PULL BOX IN EXISTING CONDUIT RUN
BP	PEDESTRIAN BARRICADE, TYPE AS INDICATED ON PLAN
CB	INSTALL CONDUIT INTO EXISTING PULL BOX
CC	CONNECT NEW AND EXISTING CONDUIT. REMOVE EXISTING CONDUCTORS AND INSTALL CONDUCTORS AS INDICATED
CF	CONDUIT TO REMAIN FOR FUTURE USE. REMOVE CONDUCTORS. INSTALL PULL TAPE
DH	DETECTOR HANDHOLE
FA	FOUNDATION TO BE ABANDONED
IS	INSTALL SIGN ON SIGNAL MAST ARM
NS	NO SLIP BASE ON STANDARD
PEC	PHOTOELECTRIC CONTROL
PEU	PHOTOELECTRIC UNIT
RC	EQUIPMENT OR MATERIAL TO BE REMOVED AND BECOME THE PROPERTY OF THE CONTRACTOR
RE	REMOVE ELECTROLIER, FUSES AND BALLAST. TAPE ENDS OF CONDUCTORS
RL	RELOCATE EQUIPMENT
RR	REMOVE AND REUSE EQUIPMENT
RS	REMOVE AND SALVAGE EQUIPMENT
SC	SPLICE NEW TO EXISTING CONDUCTORS
SD	SERVICE DISCONNECT
TSP	TELEPHONE SERVICE POINT

ABBREVIATIONS

APS	ACCESSIBLE PEDESTRIAN SIGNAL
BBS	BATTERY BACKUP SYSTEM
BC	BOLT CIRCLE
BPB	BICYCLE PUSH BUTTON
C	CONDUIT
CB	CIRCUIT BREAKER
CCTV	CLOSED CIRCUIT TELEVISION
Ckt	CIRCUIT
CMS	CHANGEABLE MESSAGE SIGN
Ctid	CALTRANS IDENTIFICATION
Comm	COMMUNICATION
DLC	LOOP DETECTOR LEAD-IN CABLE
EMS	EXTINGUISHABLE MESSAGE SIGN
EVUC	EMERGENCY VEHICLE UNIT CABLE
EVUD	EMERGENCY VEHICLE UNIT DETECTOR
FB	FLASHING BEACON
FBCA	FLASHING BEACON CONTROL ASSEMBLY
FBS	FLASHING BEACON WITH SLIP BASE
FO	FIBER OPTIC
G	EQUIPMENT GROUNDING CONDUCTOR
GB	GROUND BUS
GFCI	GROUND FAULT CIRCUIT INTERRUPTER
HAR	HIGHWAY ADVISORY RADIO
Hex	HEXAGONAL
HPS	HIGH PRESSURE SODIUM
IISNS	INTERNALLY ILLUMINATED STREET NAME SIGN
ISL	INDUCTION SIGN LIGHTING
LED	LIGHT EMITTING DIODE
LMA	LUMINAIRE MAST ARM
LPS	LOW PRESSURE SODIUM
Ltg	LIGHTING
Lum	LUMINAIRE
M	METERED
MAT	MAST ARM MOUNTING TOP ATTACHMENT
MAS	MAST ARM MOUNTING SIDE ATTACHMENT
M/M	MULTIPLE TO MULTIPLE TRANSFORMER
Mtg	MOUNTING
MV	MERCURY VAPOR LIGHTING FIXTURE
MVDS	MICROWAVE VEHICLE DETECTION SYSTEM
N	NEUTRAL (GROUNDED CONDUCTOR)
NB	NEUTRAL BUS
NC	NORMALLY CLOSE
NO	NORMALLY OPEN
P	CIRCUIT BREAKER'S POLE
PB	PULL BOX
PBA	PUSH BUTTON ASSEMBLY
PEC	PHOTOELECTRIC CONTROL
Ped	PEDESTRIAN
PEU	PHOTOELECTRIC UNIT
PT	CONDUIT WITH PULL TAPE
RE	RELOCATED EQUIPMENT
RM	RAMP METERING
RWIS	ROADSIDE WEATHER INFORMATION SYSTEM
SB	SLIP BASE
SIC	SIGNAL INTERCONNECT CABLE
Sig	SIGNAL
SMA	SIGNAL MAST ARM
SNS	STREET NAME SIGN
SP	SERVICE POINT
TDC	TELEPHONE DEMARCATION CABINET
TMS	TRAFFIC MONITORING STATION
TOS	TRAFFIC OPERATIONS SYSTEM
Veh	VEHICLE
VIVDS	VIDEO IMAGE VEHICLE DETECTION SYSTEM
WIM	WEIGH-IN-MOTION
Xfmr	TRANSFORMER

SOFFIT AND WALL MOUNTED LUMINAIRES

PENDANT, 70 W HPS UNLESS OTHERWISE SPECIFIED

FLUSH, 70 W HPS UNLESS OTHERWISE SPECIFIED

WALL SURFACE, 70 W HPS UNLESS OTHERWISE SPECIFIED

EXISTING SOFFIT OR WALL LUMINAIRE TO REMAIN UNMODIFIED

EXISTING SOFFIT OR WALL LUMINAIRE TO BE MODIFIED AS SPECIFIED

NOTE:

Arrow indicates "street side" of luminaire.

COMMONLY USED SYMBOLS FOR UNITED STATES CUSTOMARY UNITS OF MEASUREMENT:

SYMBOL USED	DEFINITIONS
Ω	OHMS
min	MINUTE
s	SECOND
bps	BITS PER SECOND
Bps	BYTES PER SECOND
A	AMPERE
V	VOLT
V(dc)	VOLT (DIRECT CURRENT)
V(ac)	VOLT (ALTERNATING CURRENT)
FC	FOOT - CANDLE
W	WATTS
VA	VOLT-AMPERE
M	MEGA
k	KILO
m	MILLI
μ	MICRO
P	PICO
Hz	HERTZ

MISCELLANEOUS ELECTROLIERS

NEW	EXISTING	
		LUMINAIRE ON WOOD POLE
		NON-STANDARD ELECTROLIER (SEE PROJECT NOTES OR PROJECT PLANS)
		CITY ELECTROLIER
		ELECTROLIER FOUNDATION (FUTURE INSTALLATION)

NOTES:

1. HPS luminaires shall be 310 W HPS when installed on Type 21, 21D, 30, 31 and 32 Standards, unless otherwise specified. HPS luminaires shall be 200 W when installed on other type standards or poles, unless otherwise specified.
2. LED luminaires shall be 235 W when installed on Type 21, 21D, 30, 31 and 32 Standards, unless otherwise specified. LED luminaires shall be 165 W when installed on other type standards or poles, unless otherwise specified.
3. Luminaires shall be the cutoff type, ANSI Type III medium cutoff lighting distribution, unless otherwise specified.

STANDARD ELECTROLIER

NEW	EXISTING	STANDARD TYPE
		15
		15D
		15 STRUCTURE
		15D STRUCTURE
		21
		21D
		21 STRUCTURE
		21D STRUCTURE
		30
		31
		32

STATE OF CALIFORNIA
DEPARTMENT OF TRANSPORTATION

ELECTRICAL SYSTEMS (LEGEND AND ABBREVIATIONS)

NO SCALE

RSP ES-1A DATED JULY 19, 2013 SUPERSEDES STANDARD PLAN ES-1A DATED MAY 20, 2011 - PAGE 425 OF THE STANDARD PLANS BOOK DATED 2010.

REVISED STANDARD PLAN RSP ES-1A

2010 REVISED STANDARD PLAN RSP ES-1A

7-15-13

Dist	COUNTY	ROUTE	POST MILES TOTAL PROJECT	SHEET No.	TOTAL SHEETS
07	LA	110	8.5/9.4	49	62

Theresa Gabriel
REGISTERED ELECTRICAL ENGINEER

July 19, 2013
PLANS APPROVAL DATE

REGISTERED PROFESSIONAL ENGINEER
Theresa Aziz Gabriel
No. E15129
Exp. 6-30-14
ELECTRICAL
STATE OF CALIFORNIA

THE STATE OF CALIFORNIA OR ITS OFFICERS OR AGENTS SHALL NOT BE RESPONSIBLE FOR THE ACCURACY OR COMPLETENESS OF SCANNED COPIES OF THIS PLAN SHEET.

TO ACCOMPANY PLANS DATED 6-29-15

CONDUIT

NEW	EXISTING	
		LIGHTING CONDUIT, UNLESS OTHERWISE INDICATED OR NOTED
		TRAFFIC SIGNAL CONDUIT
C	c	COMMUNICATION CONDUIT
T	t	TELEPHONE CONDUIT
F	f	FIRE ALARM CONDUIT
FO	fo	FIBER OPTIC CONDUIT
		CONDUIT TERMINATION
R	r	CONDUIT RISER ATTACHED TO THE STRUCTURE OR SERVICE POLE

SERVICE EQUIPMENT

NEW	EXISTING	
OH	oh	OVERHEAD LINES
U	U	WOOD POLE, "U" INDICATES UTILITY OWNED
		POLE GUY WITH ANCHOR
		UTILITY TRANSFORMER - GROUND MOUNTED
III	III	SERVICE EQUIPMENT ENCLOSURE TYPE. DOOR INDICATES FRONT OF ENCLOSURE
T	t	TELEPHONE DEMARCATION CABINET

POLE-MOUNTED SERVICE DESIGNATION

TYPE H SERVICE, 28'-10" — TYPE OF INSTALLATION AND POLE HEIGHT ABOVE GRADE

FLASHING BEACON

NEW	EXISTING	
R	R	FLASHING BEACON (ONE VEHICLE SIGNAL HEAD WITH BACKPLATE AND VISOR) "R" INDICATES RED INDICATION, "Y" INDICATES YELLOW INDICATION
Y Y	Y Y	FLASHING BEACON WITH TYPE 15-FBS STANDARD AND A SIGN.
R R	R R	FLASHING BEACON WITH TYPES 9, 9A OR 9B SIGN UNLESS OTHERWISE SPECIFIED OR INDICATED

SIGNAL EQUIPMENT

NEW	EXISTING	
C	C	PEDESTRIAN SIGNAL HEAD "C" INDICATES COUNTDOWN PEDESTRIAN HEAD
		PUSH BUTTON ASSEMBLY POST
		PEDESTRIAN BARRICADE
		VEHICLE SIGNAL HEAD (WITH BACKPLATE AND 3-SECTIONS: RED, YELLOW AND GREEN)
		VEHICLE SIGNAL HEAD WITH ANGLE VISOR
PV	PV	MODIFICATIONS OF BASIC SYMBOL: "L" INDICATES ALL NON-ARROW SECTIONS LOUVERED "LG" INDICATES LOUVERED GREEN SECTION ONLY "PV" INDICATES ALL 12" SECTIONS PROGRAMMED VISIBILITY "8" INDICATES ALL 8" SECTIONS (ONLY WHEN SPECIFIED)
		VEHICLE SIGNAL HEAD CONSISTING OF RED, YELLOW AND GREEN LEFT ARROW SECTIONS
		VEHICLE SIGNAL HEAD CONSISTING OF RED AND YELLOW SECTIONS WITH AN UP GREEN ARROW SECTION
		VEHICLE SIGNAL HEAD (5 SECTION) CONSISTING OF RED, YELLOW AND GREEN SECTIONS WITH YELLOW AND GREEN RIGHT ARROW SECTIONS
		TYPE 15TS STANDARD WITH VEHICLE SIGNAL HEAD AND LUMINAIRE
		TYPE 21TS STANDARD WITH VEHICLE SIGNAL HEAD AND LUMINAIRE
		STANDARD WITH LUMINAIRE AND SIGNAL MAST ARMS AND ATTACHED VEHICLE SIGNAL HEADS
		TYPE 1 STANDARD WITH ATTACHED VEHICLE SIGNAL HEADS
		STANDARD WITH A SIGNAL MAST ARM, ATTACHED VEHICLE SIGNAL HEADS AND INTERNALLY ILLUMINATED STREET NAME SIGN
		CONTROLLER ASSEMBLY. DOOR INDICATES FRONT OF CABINET

SIGNAL EQUIPMENT Cont

NEW	EXISTING	
		GUARD POST
		TYPE 1 STANDARD WITH RAMP METERING SIGN
		OPTICAL DETECTOR FOR THE EMERGENCY VEHICLE DETECTION SYSTEM

NOTES:

1. All signal sections shall be 12" unless shown otherwise.
2. Signal heads shall be provided with backplates unless shown otherwise.

ILLUMINATED OVERHEAD SIGN

NEW	EXISTING	
		SINGLE POST, SINGLE ILLUMINATED SIGN, BALANCED BUTTERFLY
		SINGLE POST, DOUBLE ILLUMINATED SIGN, BALANCED BUTTERFLY
		SINGLE POST, SINGLE ILLUMINATED SIGN, FULL CANTILEVER
		DOUBLE POST, SINGLE ILLUMINATED SIGN
		SINGLE ILLUMINATED SIGN MOUNTED ON STRUCTURE
		DOUBLE POST, SINGLE ILLUMINATED SIGN WITH ELECTROLIER

STATE OF CALIFORNIA
DEPARTMENT OF TRANSPORTATION

ELECTRICAL SYSTEMS (LEGEND AND ABBREVIATIONS)

NO SCALE

RSP ES-1B DATED JULY 19, 2013 SUPERSEDES STANDARD PLAN ES-1B DATED MAY 20, 2011 - PAGE 426 OF THE STANDARD PLANS BOOK DATED 2010.

REVISED STANDARD PLAN RSP ES-1B

2010 REVISED STANDARD PLAN RSP ES-1B

7-15-13

Dist	COUNTY	ROUTE	POST MILES TOTAL PROJECT	SHEET No.	TOTAL SHEETS
07	LA	110	8.5/9.4	50	62

Theresa Gabriel
REGISTERED ELECTRICAL ENGINEER

July 19, 2013
PLANS APPROVAL DATE

REGISTERED PROFESSIONAL ENGINEER
Theresa Aziz Gabriel
No. E15129
Exp. 6-30-14
ELECTRICAL
STATE OF CALIFORNIA

THE STATE OF CALIFORNIA OR ITS OFFICERS OR AGENTS SHALL NOT BE RESPONSIBLE FOR THE ACCURACY OR COMPLETENESS OF SCANNED COPIES OF THIS PLAN SHEET.

TO ACCOMPANY PLANS DATED 6-29-15

EQUIPMENT IDENTIFICATION

ILLUMINATED SIGN IDENTIFICATION NUMBER:

SIGN No. 12345

10 ISL SCI 1.0

- SIGN NUMBER - PLACE ON POST OR STRUCTURE
- TRANSFORMER RATING (kVA)
- LIGHTING CONTROL TYPE
- NUMBER AND TYPE OF FIXTURES

DO NOT PLACE ON STANDARD OR STRUCTURE

ELECTROLIER OR EQUIPMENT IDENTIFICATION NUMBER:

12345 - 15'-0"

- MAST ARM LENGTH, IF SHOWN. DO NOT PLACE ON STANDARD OR STRUCTURE
- EQUIPMENT NUMBER - PLACE ON STANDARD OR STRUCTURE. EXISTING EQUIPMENT NUMBERS ARE SHOWN IN PARENTHESIS

CONDUIT AND CONDUCTOR IDENTIFICATION:

1½"C, 2#10, 15#14, 2 DLC, 12P#18 (PAIR)

- NUMBER AND SIZE OF CONDUCTORS AND CABLES
- SIZE OF CONDUIT IN INCHES

ø1, ø2, ø2P, etc.	TRAFFIC PHASE IDENTIFICATION FOR SIGNAL FACES, DETECTORS AND PHASE DIAGRAMS
1 2 3	LEGEND NUMBERS
A B C	EQUIPMENT, SIGNAL POLES, INSTALLATION OR ITEMS
1 2 3	CONDUIT RUN NUMBERS

SIGNAL AND LIGHTING STANDARD (TYPICAL DESIGNATION):

19A - 3 - 100

- WIND VELOCITY = 100 mph
- CASE 3 ARM LOADING
- STANDARD TYPE
- STANDARD PLAN SHEET NUMBER
- DETAIL, NUMBER, SECTION, TYPE OR ELEVATION

MISCELLANEOUS EQUIPMENT

NEW	EXISTING	
CMS	cms	CHANGEABLE MESSAGE SIGN
		CLOSED CIRCUIT TELEVISION CAMERA
		HIGHWAY ADVISORY RADIO POLE AND ANTENNA
EMS	ems	EXTINGUISHABLE MESSAGE SIGN
M V	m v	DETECTION DEVICE M = MICROWAVE SENSOR V = VIDEO IMAGE SENSOR

WIRING DIAGRAM LEGEND

----	EXTERNAL CONDUCTOR
——	CONDUCTOR OR BUS
	TIE POINT
	CONTACTOR COIL
	CONTACTOR, NO CONTACT
	TERMINAL BLOCKS
	CONTACTOR, NC CONTACT
	ENCLOSURE BOND
	GROUNDING ELECTRODE
	CIRCUIT BREAKER
	RECEPTACLE

PULL BOXES

NEW	EXISTING	
		PULL BOX, No. 5 UNLESS OTHERWISE INDICATED OR NOTED
3	9A(21)	PULL BOX, ADDITIONAL DESIGNATIONS OR DESCRIPTIONS

3 No. 3½ PULL BOX
5 No. 5 PULL BOX
6 No. 6 PULL BOX
7 No. 7 (CEILING PULL BOX)
8 No. 8 (PENDANT SOFFIT PULL BOX)
9 No. 9 PULL BOX
9A No. 9A PULL BOX

(C) COMMUNICATIONS PULL BOX
(E) PULL BOX WITH EXTENSION
(S) SPRINKLER CONTROL PULL BOX
(21) ANCHOR BOLTS AND CONDUIT FOR FUTURE INSTALLATION OF TYPE 21 STANDARD
(T) TRAFFIC PULL BOX

VEHICLE DETECTORS

5 J 9 U

- VEHICLE DETECTOR DESIGNATION
- U = UPPER
  L = LOWER
- SLOT NUMBER IN INPUT FILE
- INPUT FILE (I OR J)
- PHASE

NEW	EXISTING	
		TYPE A DETECTOR LOOP. OUTLINE OF SAWCUT SHOWN
		TYPE B DETECTOR LOOP. OUTLINE OF SAWCUT SHOWN
		TYPE C DETECTOR LOOP. OUTLINE OF SAWCUT SHOWN
		TYPE D DETECTOR LOOP. OUTLINE OF SAWCUT SHOWN
		TYPE E DETECTOR LOOP. OUTLINE OF SAWCUT SHOWN
		TYPE Q DETECTOR LOOP. OUTLINE OF SAWCUT SHOWN
		MAGNETIC DETECTOR
DH	dh	DETECTOR HANDHOLE
		MICROWAVE OR VIDEO DETECTION ZONE

STATE OF CALIFORNIA
DEPARTMENT OF TRANSPORTATION

ELECTRICAL SYSTEMS (LEGEND AND ABBREVIATIONS)

NO SCALE

RSP ES-1C DATED JULY 19, 2013 SUPERSEDES STANDARD PLAN ES-1C DATED MAY 20, 2011 - PAGE 427 OF THE STANDARD PLANS BOOK DATED 2010.

REVISED STANDARD PLAN RSP ES-1C

2010 REVISED STANDARD PLAN RSP ES-1C

7-11-13

DIST	COUNTY	ROUTE	POST MILES TOTAL PROJECT	SHEET NO.	TOTAL SHEETS
07	LA	110	8.5/9.4	51	62

REGISTERED ELECTRICAL ENGINEER

October 5, 2007
PLANS APPROVAL DATE

REGISTERED PROFESSIONAL ENGINEER
Jeffery G. McRae
No. E14512
Exp. 6-30-08
ELECTRICAL
STATE OF CALIFORNIA

The State of California or its officers or agents shall not be responsible for the accuracy or completeness of electronic copies of this plan sheet.

To accompany plans dated 6-29-15

LOOP INSTALLATION PROCEDURE

1. Loops shall be centered in lanes.
2. Saw slots in pavement for loop conductors as shown in details.
3. Distance between side of loop and a lead-in saw cut from adjacent detectors shall be 2'-0" minimum. Distance between lead-in saw cuts shall be 6" minimum.
4. Bottom of saw slot shall be smooth with no sharp edges.
5. Slots shall be washed until clean, blown out and thoroughly dried before installing loop conductors.
6. Adjacent loops on the same sensor unit channel shall be wound in opposite directions.
7. Identify and tag loop circuit pairs in the pull box with loop number, start (S) and finish (F) of conductor. Identify and tag lead-in-cable with sensor number and phase.
8. Install loop conductor in slot using a 3/16" to 1/4" thick wood paddle. Hold loop conductors with wood paddles (at the bottom of the sawed slot) during sealant placement.
9. No more than 2 twisted pairs shall be installed in one sawed slot.
10. Allow additional 5'-0" of slack length of conductor for the lead-in run to pull box.
11. The additional length of each conductor for each loop shall be twisted together into a pair (6 turns per 3'-4" minimum) before being placed in the slot and conduit leading to pull box.
12. Test each loop circuit for continuity, circuit resistance and insulation resistance at the pull box before filling slots.
13. Fill slots as shown in details.
14. Splice loop conductors to lead-in-cable. Splices shall be soldered.
15. End of lead-in-cable and Type 2 loop conductor shall be waterproofed prior to installing in conduit to prevent moisture from entering the cable.
16. Lead-in-cable shall not be spliced between the pull box and the controller cabinet terminals.
17. Test each loop circuit for continuity, circuit resistance and insulation resistance at the controller cabinet location.
18. Where loop conductors are not to be spliced to a lead-in-cable, the ends of the conductors shall be taped and waterproofed with electrical insulating coating.

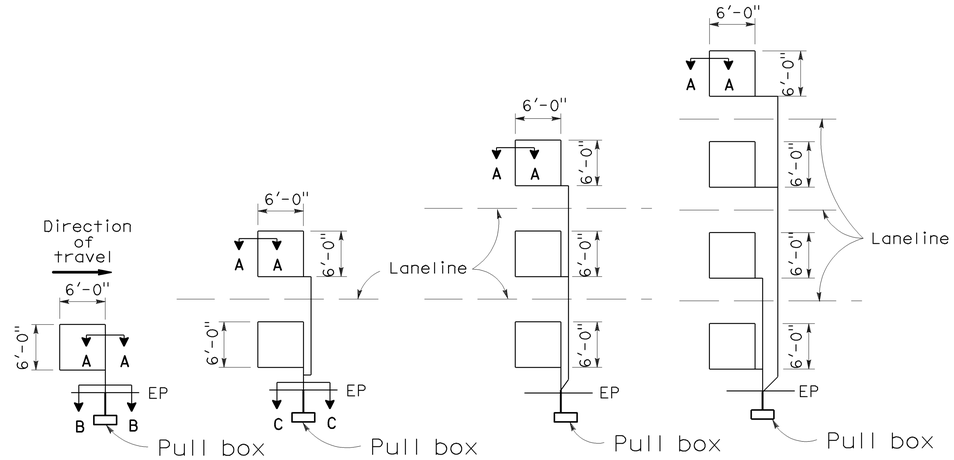

TYPE 1A INSTALLATION | TYPE 2A INSTALLATION | TYPE 3A INSTALLATION | TYPE 4A INSTALLATION

SAWCUT DETAILS

(Type A loop detector configurations illustrated)

1. 1A thru 4A = 1 Type A loop configuration in each lane.
2. 1B thru 4B = 1 Type B loop configuration in each lane.
3. 1C = 1 Type C loop configuration entering lanes as required.
4. 1D thru 4D = 1 Type D loop configuration in each lane.
5. 1E thru 4E = 1 Type E loop configuration in each lane.
6. 1Q thru 4Q = 1 Type Q loop configuration in each lane.
   (Use Type A, B, C, D, E or Q loop detector configurations only when specified or shown on plans)

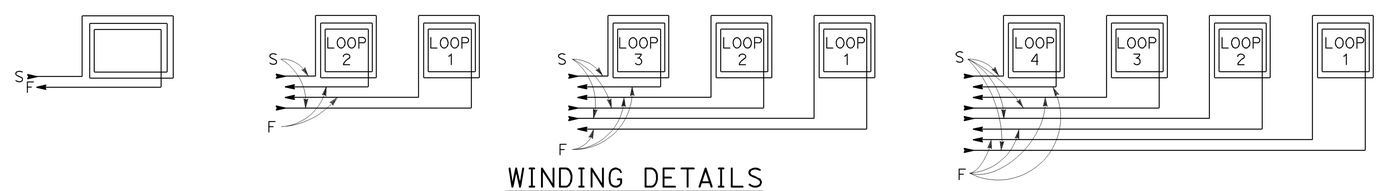

WINDING DETAILS

See Notes 6 and 7

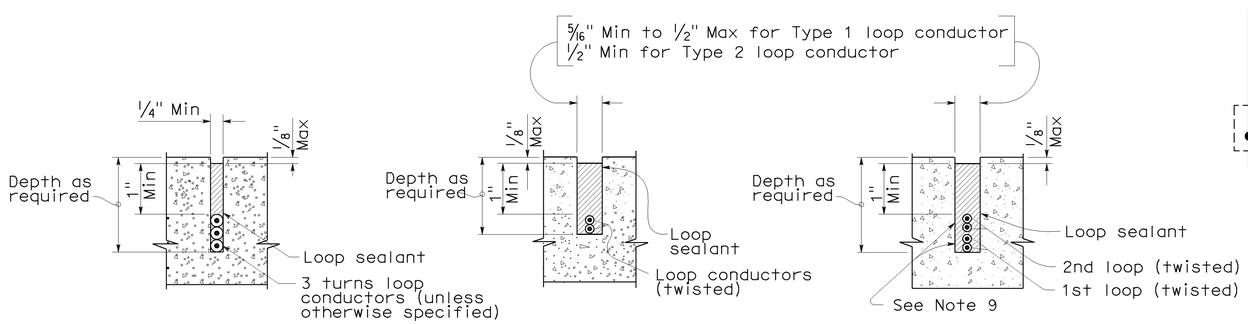

SECTION A-A | SECTION B-B | SECTION C-C

SLOT DETAILS - TYPE 1 AND TYPE 2 LOOP CONDUCTOR

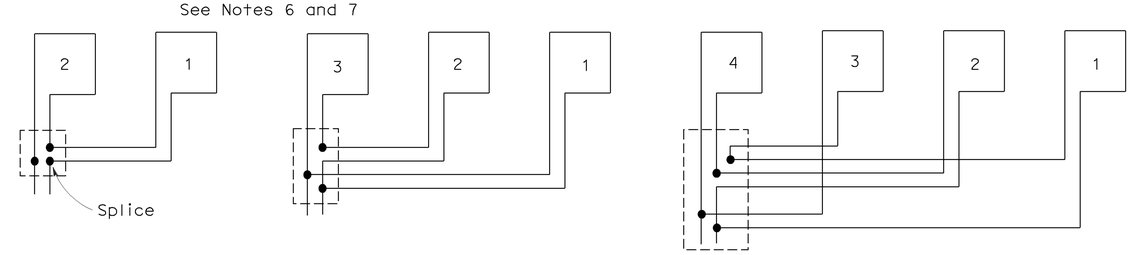

TYPICAL LOOP CONNECTIONS

(Dashed lines represent the pull box)

STATE OF CALIFORNIA
DEPARTMENT OF TRANSPORTATION

ELECTRICAL SYSTEMS (DETECTORS)

NO SCALE

RSP ES-5A DATED OCTOBER 5, 2007 SUPERCEDES STANDARD PLAN ES-5A DATED MAY 1, 2006 - PAGE 423 OF THE STANDARD PLANS BOOK DATED MAY 2006.

REVISED STANDARD PLAN RSP ES-5A

2006 REVISED STANDARD PLAN RSP ES-5A

8-17-07

Dist	COUNTY	ROUTE	POST MILES TOTAL PROJECT	SHEET No.	TOTAL SHEETS
07	LA	110	8.5/9.4	52	62

Theresa Gabriel
REGISTERED ELECTRICAL ENGINEER

July 19, 2013
PLANS APPROVAL DATE

REGISTERED PROFESSIONAL ENGINEER Theresa Aziz Gabriel No. E15129 Exp. 6-30-14 ELECTRICAL STATE OF CALIFORNIA

THE STATE OF CALIFORNIA OR ITS OFFICERS OR AGENTS SHALL NOT BE RESPONSIBLE FOR THE ACCURACY OR COMPLETENESS OF SCANNED COPIES OF THIS PLAN SHEET.

TO ACCOMPANY PLANS DATED 6-29-15

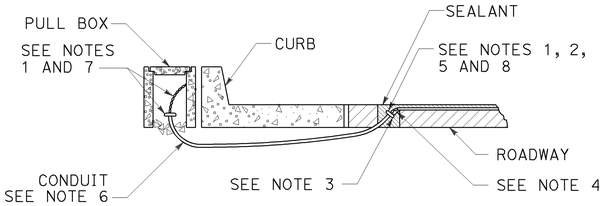

TYPE A
CURB TERMINATION DETAIL

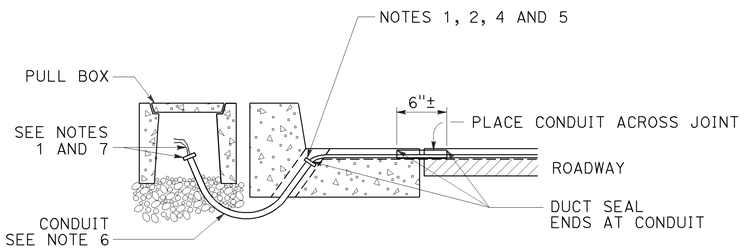

CROSS SECTION

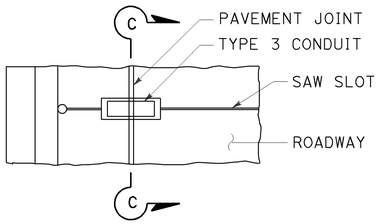

PLAN VIEW

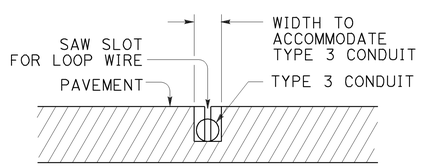

SECTION C-C

TYPE B
CURB TERMINATION DETAIL

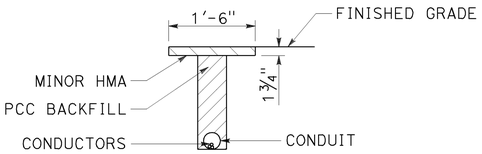

"T" TRENCH
DETAIL T

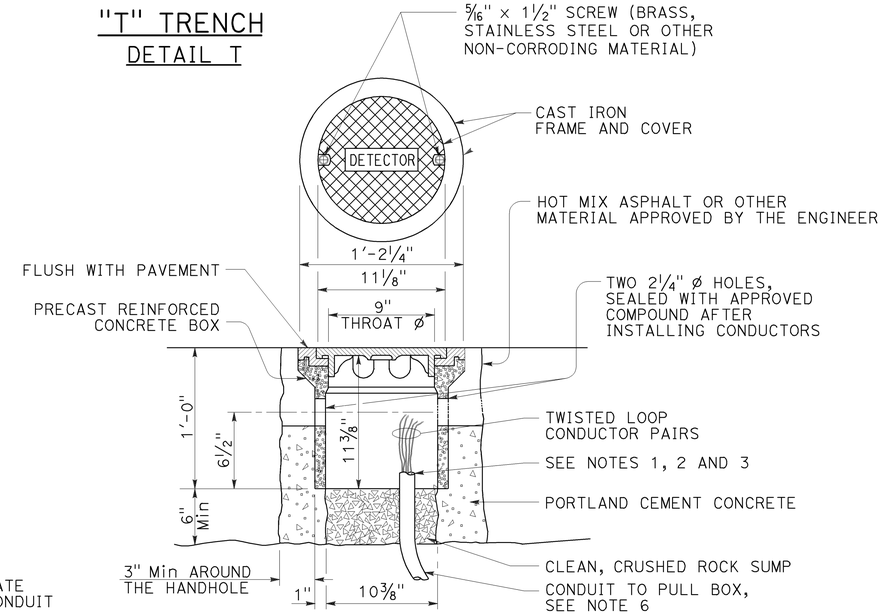

DETECTOR HANDHOLE DETAIL

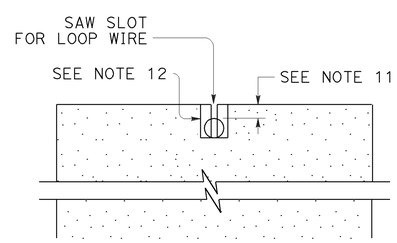

SECTION A-A

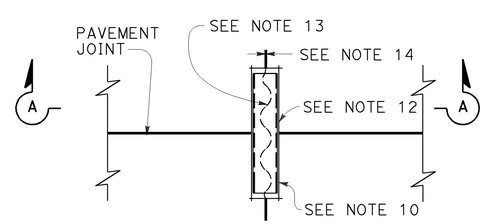

PLAN VIEW

TYPICAL LOOP LEAD-IN DETAIL AT PAVEMENT JOINT

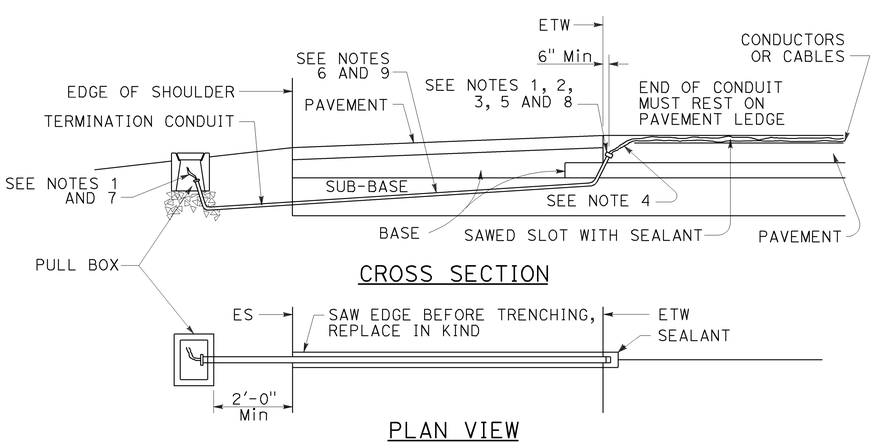

CROSS SECTION

PLAN VIEW

SHOULDER TERMINATION DETAILS

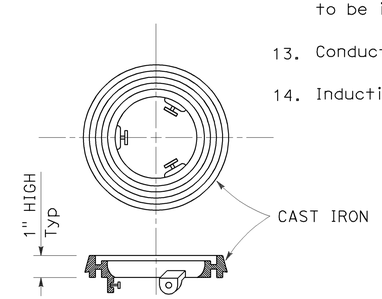

LOCKING GRADE RING

NOTES:

1. Bushing shall be used at end of conduit.
2. Tape detector conductors or cables 3" each side of bushings.
3. Install duct seal compound to each end of termination conduit before installing sealant.
4. Round all sharp edges where detector conductors or cables have to pass.
5. End of conduit shall be 3⅛" below roadway surface.
6. Conduit size / Loop conductors
   - 1"C minimum — 1 to 2 pairs
   - 1½"C minimum — 3 to 4 pairs
   - 2"C minimum — 5 or more pairs
7. Splice detector conductors or cables to detector lead-in-cable.
8. Location of detector handhole when shown on plans.
9. When the shoulder and traveled way are paved with the same material and there is no joint between them, the conduit shall extend only 2'-0" into the shoulder pavement.
10. ¾"C, Type 3 conduit 6" long minimum, plug both ends with duct compound to keep out sealant.
11. ½" Minimum between top of conduit and pavement surface.
12. Sawcut shall not exceed 1" in width and ⅛" longer than conduit to be installed.
13. Conductors with ½" minimum slack inside conduit.
14. Inductive loop detector saw slot.

STATE OF CALIFORNIA
DEPARTMENT OF TRANSPORTATION

ELECTRICAL SYSTEMS (CURB TERMINATION AND HANDHOLE)

NO SCALE

RSP ES-5D DATED JULY 19, 2013 SUPERSEDES STANDARD PLAN ES-5D DATED MAY 20, 2011 - PAGE 451 OF THE STANDARD PLANS BOOK DATED 2010.

REVISED STANDARD PLAN RSP ES-5D

2010 REVISED STANDARD PLAN RSP ES-5D

7-9-13

DIST	COUNTY	ROUTE	POST MILES TOTAL PROJECT	SHEET NO.	TOTAL SHEETS
07	LA	110	8.5/9.4	53	62

Theresa Gabriel
REGISTERED ELECTRICAL ENGINEER

July 19, 2013
PLANS APPROVAL DATE

REGISTERED PROFESSIONAL ENGINEER Theresa Aziz Gabriel No. E15129 Exp. 6-30-14 ELECTRICAL STATE OF CALIFORNIA

THE STATE OF CALIFORNIA OR ITS OFFICERS OR AGENTS SHALL NOT BE RESPONSIBLE FOR THE ACCURACY OR COMPLETENESS OF SCANNED COPIES OF THIS PLAN SHEET.

TO ACCOMPANY PLANS DATED 6-29-15

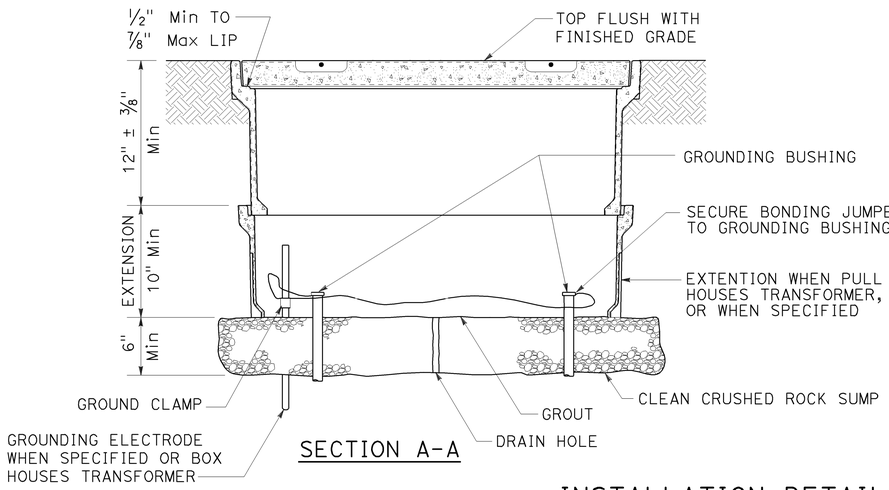

SECTION A-A

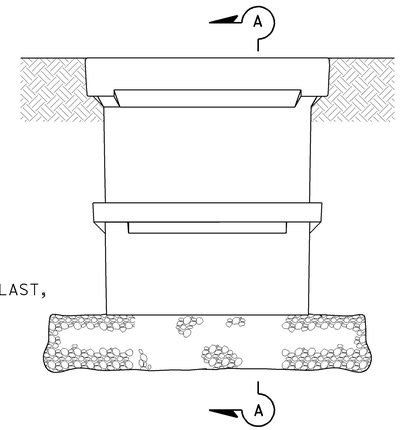

SIDE VIEW

INSTALLATION DETAILS

DETAIL A

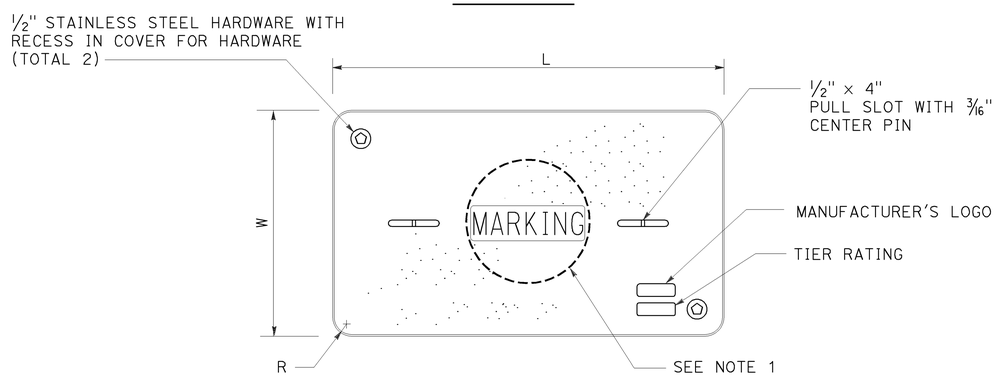

COVER TOP VIEW

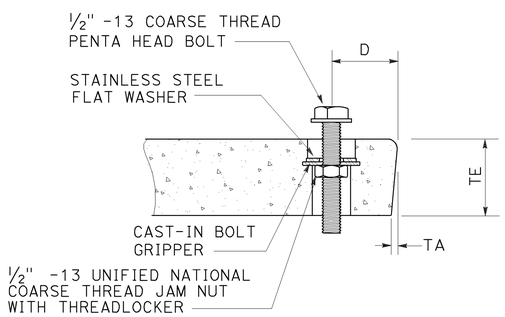

TYPICAL COVER CAPTIVE BOLT

OR SIMILAR

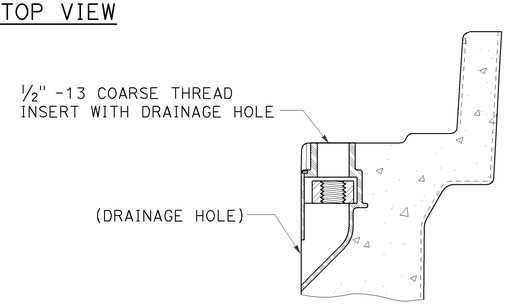

TYPICAL THREADED INSERT

OR SIMILAR

DIMENSION TABLE										
PULL BOX	PULL BOX			COVER						
	MINIMUM DEPTH BOX	MINIMUM DEPTH EXTENSION	MAXIMUM WEIGHT	L	W	R	TE	TA	D	MAXIMUM WEIGHT
No. 3½	12"	N/A	40 lb	1′ - 3⅜"	10⅛"	1⅜"	2"	⅛"	1¾"	30 lb
No. 5	12"	10"	55 lb	1′ - 11¼"	1′ - 1¾"	1⅜"	2"	⅛"	1¾"	60 lb
No. 6	12"	10"	70 lb	2′ - 6½"	1′ - 5½"	1⅜"	2"	⅛"	2"	85 lb

NOTES:

1. Pull box covers shall be marked as follows: "SERVICE" Service circuits between service point and service disconnect; "SPRINKLER-CONTROL" sprinkler control circuits, 50 V or less; "CALTRANS" on all pull boxes, except pull boxes marked "SPRINKLER-CONTROL"; and "TELEPHONE" Telephone service;
   - A) No. 3½ pull box.
     - 1) "SIGNAL" - Traffic signal circuits with or without lighting or sign lighting circuits.
     - 2) "LIGHTING" - Lighting or sign lighting circuits where voltage is under 600 V.
   - B) No. 5, 6, 9 or 9A pull box.
     - 1) "TRAFFIC SIGNAL" - Traffic signal circuits with or without lighting or sign lighting circuits.
     - 2) "LIGHTING" - Lighting or sign lighting circuits where voltage is under 600 V.
     - 3) "LIGHTING-HIGH VOLTAGE" - Lighting or sign lighting circuits where voltage is above 600 V.
     - 4) "IRRIGATION" - Circuits to irrigation controller 120 V or more.
     - 5) "RAMP METER" - Ramp meter circuits.
     - 6) "COUNT STATION" - Count or speed monitor circuits.
     - 7) "COMMUNICATIONS" - Communication circuits.
     - 8) "TOS COMMUNICATIONS" - TOS communication line.
     - 9) "TOS POWER" - TOS power.
     - 10) "TDC POWER" - Telephone demarcation cabinet power.
     - 11) "CCTV" - Closed circuit television circuits.
     - 12) "TMS" - Traffic monitoring station circuits.
     - 13) "CMS" - Changeable message sign circuits.
     - 14) "HAR" - Highway advisory radio circuits.
     - 15) "BOOSTER PUMP" - Booster pump circuit.
2. The nominal dimensions of the opening in which the cover sets shall be the same as the cover dimensions except the length and width dimensions shall be ⅛" greater.
3. Covers and boxes shall be interchangeable with California standard male and female gages. When interchanged with a standard male or female gage, the top surfaces shall be flush within ⅛". Top outside radius of covers and pull boxes shall have a ⅛" radius.
4. Pull box extension may be another pull box as long as the bottom edge of the pull box can fit into the cover opening.
5. All dimensions for the cover for non-traffic pull box are nominal values.

STATE OF CALIFORNIA
DEPARTMENT OF TRANSPORTATION

ELECTRICAL SYSTEMS (NON-TRAFFIC PULL BOX)

NO SCALE

RSP ES-8A DATED JULY 19, 2013 SUPERSEDES RSP ES-8A DATED JANUARY 20, 2012 THAT SUPPLEMENTS THE STANDARD PLANS BOOK DATED 2010.

REVISED STANDARD PLAN RSP ES-8A

2010 REVISED STANDARD PLAN RSP ES-8A

7-15-13

DIST	COUNTY	ROUTE	POST MILES TOTAL PROJECT	SHEET NO.	TOTAL SHEETS
07	LA	110	8.5/9.4	54	62

Theresa Gabriel
REGISTERED ELECTRICAL ENGINEER

July 19, 2013
PLANS APPROVAL DATE

REGISTERED PROFESSIONAL ENGINEER
Theresa Aziz Gabriel
No. E15129
Exp. 6-30-14
ELECTRICAL
STATE OF CALIFORNIA

THE STATE OF CALIFORNIA OR ITS OFFICERS OR AGENTS SHALL NOT BE RESPONSIBLE FOR THE ACCURACY OR COMPLETENESS OF SCANNED COPIES OF THIS PLAN SHEET.

TO ACCOMPANY PLANS DATED 6-29-15

2010 REVISED STANDARD PLAN RSP ES-8B

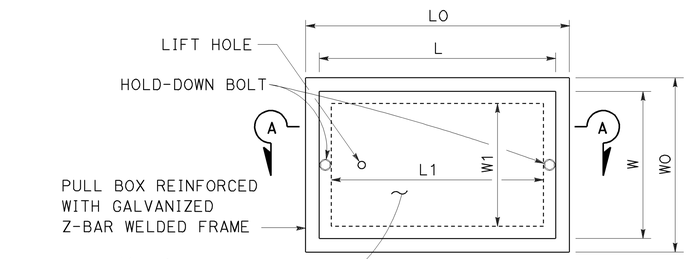

TOP VIEW

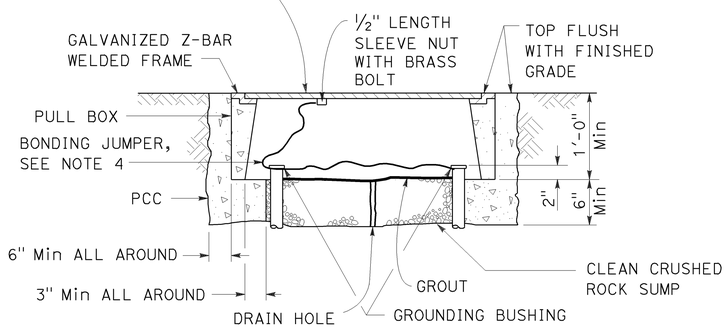

SECTION A-A

No. 3½(T), No. 5(T) AND No. 6(T) TRAFFIC PULL BOX

NOTES:

1. Traffic pull box shall be provided with steel cover and special concrete footing. Steel cover shall have embossed non-skid pattern.
2. Steel reinforcing shall be as regularly used in the standard products of the respective manufacturer.
3. Pull box covers shall be marked as follows: "SERVICE" Service circuits between service point and service disconnect; "SPRINKLER-CONTROL" Sprinkler control circuits, 50 V or less; "CALTRANS" On all pull boxes, except pull boxes marked "SPRINKLER-CONTROL"; and "TELEPHONE" Telephone service.
   - A) No. 3½(T) pull box.
     - 1) "SIGNAL" - Traffic signal circuits with or without lighting or sign lighting circuits.
     - 2) "LIGHTING" - Lighting or sign lighting circuits where voltage is under 600 V.
   - B) No. 5(T) or 6(T) pull box.
     - 1) "TRAFFIC SIGNAL" - Traffic signal circuits with or without lighting or sign lighting circuits.
     - 2) "LIGHTING" - Lighting or sign lighting circuits where voltage is under 600 V.
     - 3) "LIGHTING-HIGH VOLTAGE" - Lighting or sign lighting circuits where voltage is above 600 V.
     - 4) "IRRIGATION" - Circuits to irrigation controller 120 V or more.
     - 5) "RAMP METER" - Ramp meter circuits.
     - 6) "COUNT STATION" - Count or speed monitor circuits.
     - 7) "COMMUNICATION" - Communication circuits.
     - 8) "TOS COMMUNICATIONS" - TOS communications line.
     - 9) "TOS POWER" - TOS power.
     - 10) "TDC POWER" - Telephone demarcation cabinet power.
     - 11) "CCTV" - Closed circuit television circuits.
     - 12) "TMS" - Traffic monitoring station circuits.
     - 13) "CMS" - Changeable message sign circuits.
     - 14) "HAR" - Highway advisory radio circuits.
     - 15) "BOOSTER PUMP" - Booster pump circuit.
4. Bonding jumper for metal covers shall be 3' long, minimum.
5. The nominal dimensions of the opening in which the cover sets shall be the same as the cover dimensions except the length and width dimensions shall be ⅛" greater.
6. Covers and boxes shall be interchangeable with California standard male and female gages. When interchanged with a standard male or female gage, the top surfaces shall be flush within ⅛".

DIMENSION TABLE

PULL BOX	PULL BOX						COVER				
	MINIMUM * THICKNESS	MINIMUM DEPTH BOX AND EXTENSION	WO	LO	L1	W1	L **	W **	R	EDGE THICKNESS	EDGE TAPER
No. 3½(T)	1½"	1'-0"	1'-5"± 1"	1'-8⅞"±	1'-2½"±	10⅝"± 1"	1'-8"±	1'-1¾"±	0"	½"	NONE
No. 5(T)	1¾"	1'-0"	1'-11½"± 1"	2'-5½"±	1'-7"±	1'-1"± 1"	2'-3"±	1'-4"±	0"	½"	NONE
No. 6(T)	2"	1'-0"	2'-6"± 1"	2'-11½"±	1'-11½"±	1'-5"± 1"	2'-9"±	1'-8"±	0"	½"	NONE

* EXCLUDING CONDUIT WEB ** TOP DIMENSION

STATE OF CALIFORNIA
DEPARTMENT OF TRANSPORTATION

ELECTRICAL SYSTEMS (TRAFFIC PULL BOX)

NO SCALE

RSP ES-8B DATED JULY 19, 2013 SUPERSEDES RSP ES-8B DATED JANUARY 20, 2012 THAT SUPPLEMENTS THE STANDARD PLANS BOOK DATED 2010.

REVISED STANDARD PLAN RSP ES-8B

7-15-13

Dist	COUNTY	ROUTE	POST MILES TOTAL PROJECT	SHEET No.	TOTAL SHEETS
07	LA	110	8.5/9.4	55	62

Theresa Gabriel
REGISTERED ELECTRICAL ENGINEER

July 19, 2013
PLANS APPROVAL DATE

REGISTERED PROFESSIONAL ENGINEER
Theresa Aziz Gabriel
No. E15129
Exp. 6-30-14
ELECTRICAL
STATE OF CALIFORNIA

THE STATE OF CALIFORNIA OR ITS OFFICERS OR AGENTS SHALL NOT BE RESPONSIBLE FOR THE ACCURACY OR COMPLETENESS OF SCANNED COPIES OF THIS PLAN SHEET.

TO ACCOMPANY PLANS DATED 6-29-15

ISOFOOTCANDLE CURVE - MINIMUM

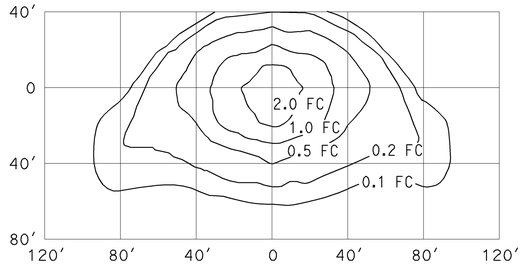

TYPE III MEDIUM CUTOFF

Cutoff Luminaire
34′ Mounting Height
Lamp operated at 22,000 lm
200-W high pressure sodium lamp
ANSI Designation S66

ISOFOOTCANDLE CURVE - MINIMUM

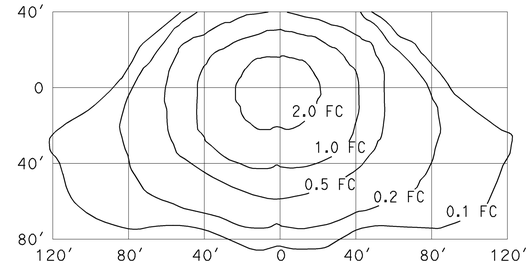

TYPE III MEDIUM CUTOFF

Cutoff Luminaire
40′ Mounting Height
Lamp operated at 37,000 lm
310-W high pressure sodium lamp
ANSI Designation S67

ISOFOOTCANDLE CURVE - MINIMUM

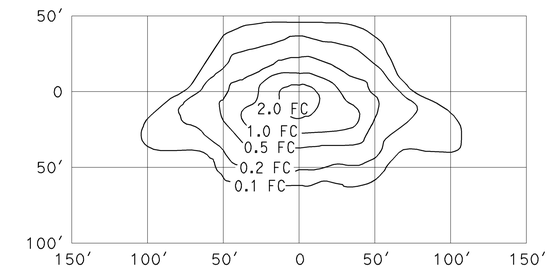

TYPE III MEDIUM CUTOFF

Cutoff Luminaire
30′ Mounting Height
Lamp operated at 16,000 lm
150-W high pressure sodium lamp
ANSI Designation S55

ISOFOOTCANDLE CURVE - MINIMUM

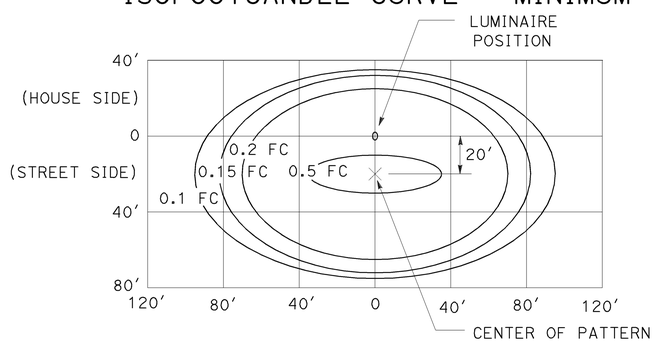

LED LUMINAIRE ROADWAY 1

165-W at 34′ Mounting Height

ISOFOOTCANDLE CURVE - MINIMUM

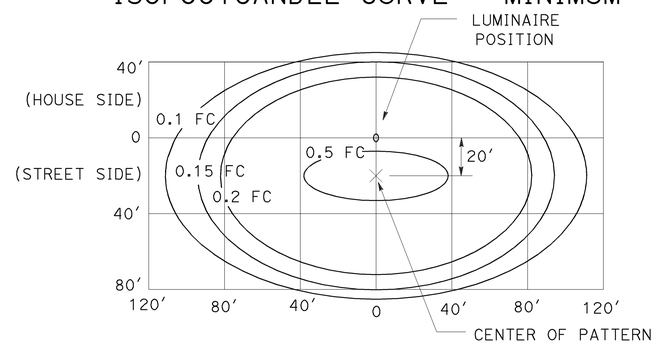

LED LUMINAIRE ROADWAY 2

235-W at 40′ Mounting Height

ISOFOOTCANDLE CURVE - MINIMUM

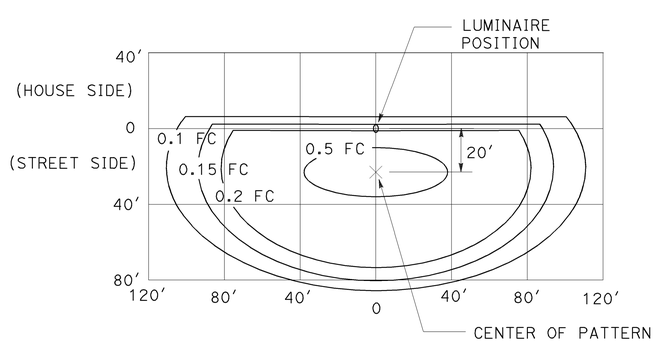

LED LUMINAIRE ROADWAY 3

235-W at 40′ Mounting Height
with back side control

ISOFOOTCANDLE CURVE - MINIMUM

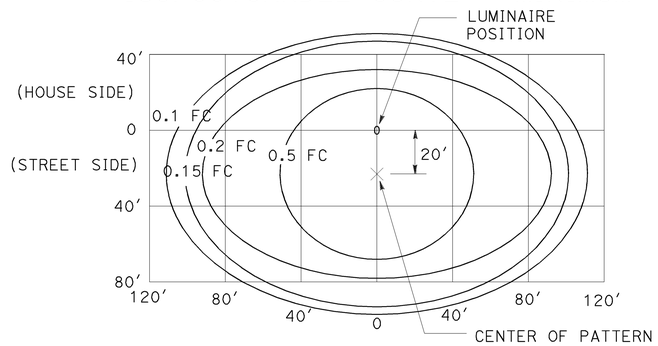

LED LUMINAIRE ROADWAY 4

300-W at 40′ Mounting Height

ISOFOOTCANDLE CURVE - MINIMUM

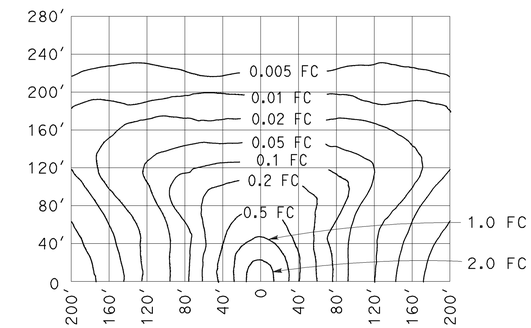

LOW PRESSURE SODIUM LUMINAIRE

40′ Mounting Height
Lamp operated at 33,000 lm
180-W low pressure sodium lamp

STATE OF CALIFORNIA
DEPARTMENT OF TRANSPORTATION

ELECTRICAL SYSTEMS (ISOFOOTCANDLE DIAGRAMS)

NO SCALE

RSP ES-10A DATED JULY 19, 2013 SUPERSEDES RSP ES-10A DATED JULY 20, 2012 THAT SUPPLEMENTS THE STANDARD PLANS BOOK DATED 2010.

REVISED STANDARD PLAN RSP ES-10A

2010 REVISED STANDARD PLAN RSP ES-10A

Dist	COUNTY	ROUTE	POST MILES TOTAL PROJECT	SHEET No.	TOTAL SHEETS
07	LA	110	8.5/9.4	56	62

REGISTERED ELECTRICAL ENGINEER

July 20, 2012
PLANS APPROVAL DATE

REGISTERED PROFESSIONAL ENGINEER
Jeffery G. McRae
No. E14512
Exp. 6-30-14
ELECTRICAL
STATE OF CALIFORNIA

THE STATE OF CALIFORNIA OR ITS OFFICERS OR AGENTS SHALL NOT BE RESPONSIBLE FOR THE ACCURACY OR COMPLETENESS OF SCANNED COPIES OF THIS PLAN SHEET.

TO ACCOMPANY PLANS DATED 6-29-15

ISOFOOTCANDLE CURVE - MINIMUM

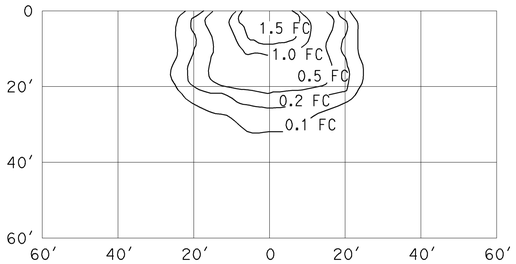

WALL LUMINAIRE
15′ Mounting Height
Lamp operated at 5,800 lm
70-W high pressure sodium lamp
ANSI Designation S62

ISOFOOTCANDLE CURVE - MINIMUM

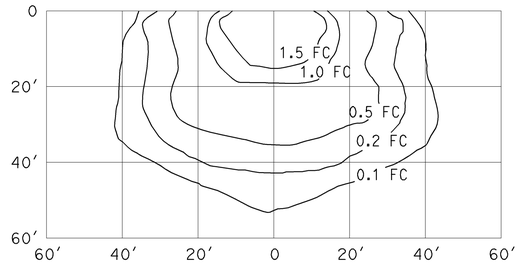

WALL LUMINAIRE
15′ Mounting Height
Lamp operated at 9,500 lm
100-W high pressure sodium lamp
ANSI Designation S54

ISOFOOTCANDLE CURVE - MINIMUM

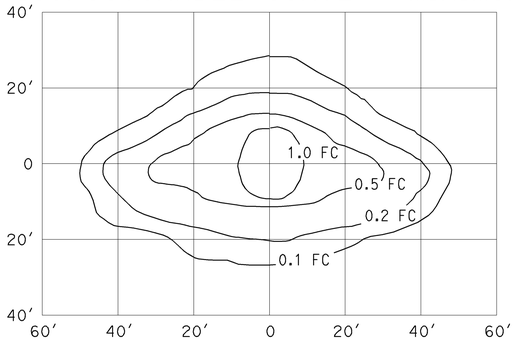

PENDANT SOFFIT LUMINAIRE
TYPE III SHORT
17′ Mounting Height
Lamp operated at 5,800 lm
70-W high pressure sodium lamp
ANSI Designation S62

ISOFOOTCANDLE CURVE - MINIMUM

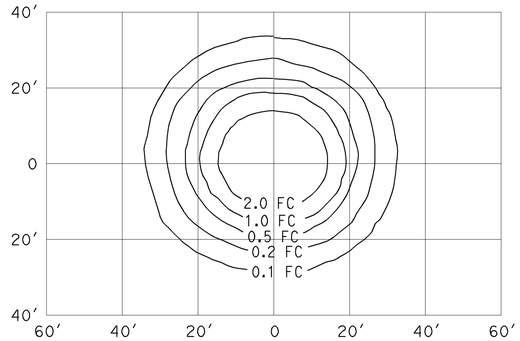

PENDANT SOFFIT LUMINAIRE
17′ Mounting Height
Lamp operated at 5,800 lm
70-W high pressure sodium lamp
ANSI Designation S62

ISOFOOTCANDLE CURVE - MINIMUM

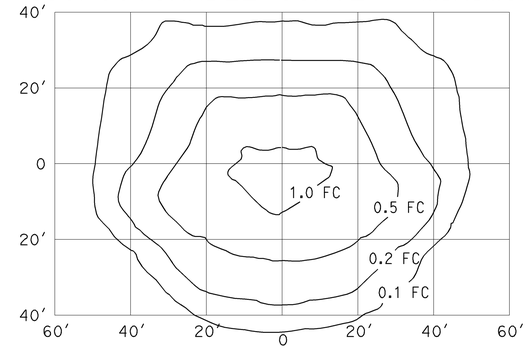

FLUSH SOFFIT LUMINAIRE
17′ Mounting Height
Lamp operated at 5,800 lm
70-W high pressure sodium lamp
ANSI Designation S62

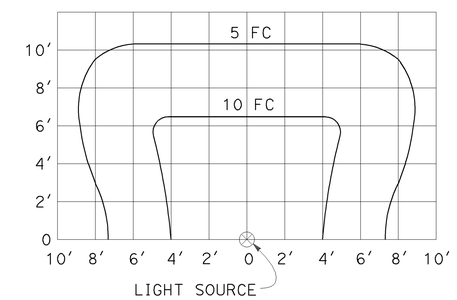

SIGN LIGHTING FIXTURE
ISOFOOTCANDLE DIAGRAM

NOTES:

1. Curves represent the minimum footcandle (FC) of initial illumination on a 10′-0" x 20′-0" panel.
2. The FC shown are with the fixture attached to the light fixture mounting channel which places the center of the source 4′-8" in front of panel and 1′-0" below the bottom edge.
3. Applicable lamp: 85-W fluorescent phosphor coated induction lamp.

STATE OF CALIFORNIA
DEPARTMENT OF TRANSPORTATION

ELECTRICAL SYSTEMS (ISOFOOTCANDLE DIAGRAMS)

NO SCALE

RSP ES-10B DATED JULY 20, 2012 SUPPLEMENTS THE STANDARD PLANS BOOK DATED 2010.

REVISED STANDARD PLAN RSP ES-10B

2010 REVISED STANDARD PLAN RSP ES-10B

Dist	COUNTY	ROUTE	POST MILES TOTAL PROJECT	SHEET No.	TOTAL SHEETS
07	LA	110	8.5/9.4	57	62

REGISTERED CIVIL ENGINEER

July 19, 2013
PLANS APPROVAL DATE

REGISTERED PROFESSIONAL ENGINEER
Stanley P. Johnson
No. C57793
Exp. 3-31-14
CIVIL
STATE OF CALIFORNIA

THE STATE OF CALIFORNIA OR ITS OFFICERS OR AGENTS SHALL NOT BE RESPONSIBLE FOR THE ACCURACY OR COMPLETENESS OF SCANNED COPIES OF THIS PLAN SHEET.

TO ACCOMPANY PLANS DATED 6-29-15

STANDARD TYPE	SETBACK (DIMENSION A)
32	30'-0" (Min)
31	20'-0" (Min)
15, 15D, 15-SB, 21, 21D, 30	ARM LENGTH (Min)

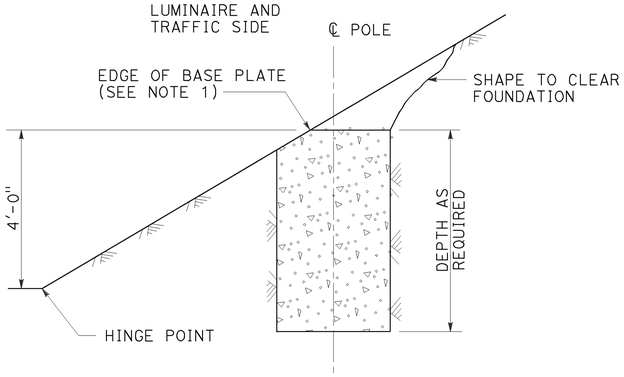

CUT SLOPES
STEEPER THAN 4:1,
LESS THAN 2:1
DETAIL A-1
See Note 2 and 3

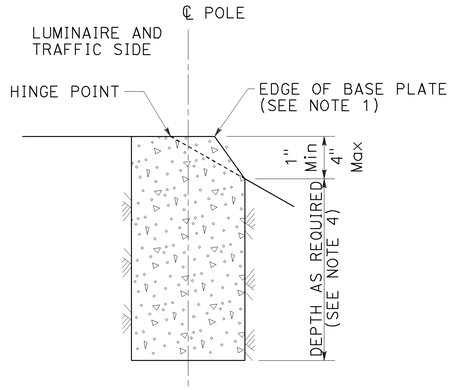

FILL SLOPES
STEEPER THAN 4:1,
LESS THAN 2:1
DETAIL A-2
See Note 2 and 3

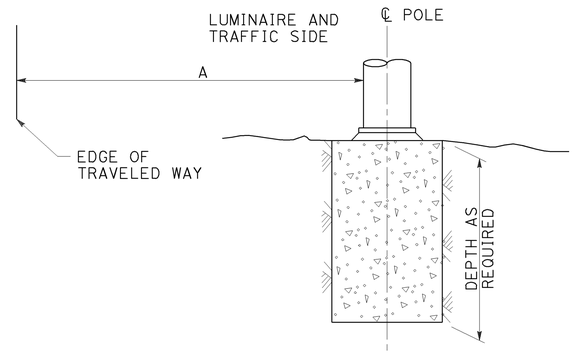

FLAT SECTIONS, CUT OR FILL SLOPES
4:1 OR FLATTER
DETAIL A-3
See Note 2

FOUNDATIONS ADJACENT TO ALL ROADWAYS EXCEPT
IN SIDEWALK, MEDIAN AND ISLAND AREAS
DETAIL A

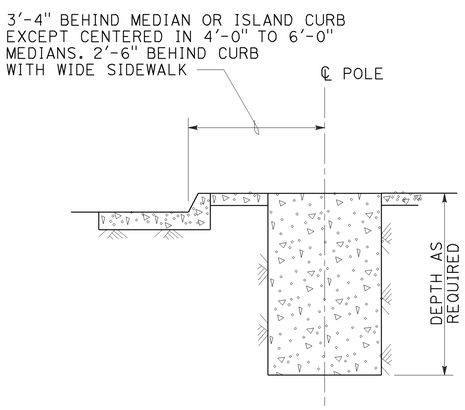

MEDIAN, ISLAND
OR WIDE SIDEWALK
DETAIL B-1
7' Wide and wider

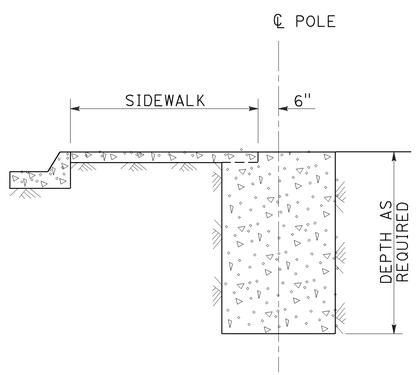

NARROW SIDEWALK
DETAIL B-2
Less than 7' wide

FOUNDATIONS IN SIDEWALK, MEDIAN AND ISLAND AREAS
DETAIL B

NOTES:

1. Where a portion of the foundation is above grade, the top edges shall have a 1" chamfer.
2. Slopes shall be horizontal to vertical ratio (Horizontal : Vertical).
3. Horizontal setbacks on cut and fill slopes steeper than 4:1 shall not exceed the distance shown for flat sections.
4. CIDH embedment depth shall be increased beyond standard depths by the diameter of the CIDH.

STATE OF CALIFORNIA
DEPARTMENT OF TRANSPORTATION

ELECTRICAL SYSTEMS (FOUNDATION INSTALLATIONS)

NO SCALE

RSP ES-11 DATED JULY 19, 2013 SUPERSEDES STANDARD PLAN ES-11
DATED MAY 20, 2011 - PAGE 488 OF THE STANDARD PLANS BOOK DATED 2010.

REVISED STANDARD PLAN RSP ES-11

2010 REVISED STANDARD PLAN RSP ES-11

7-9-13

Dist	COUNTY	ROUTE	POST MILES TOTAL PROJECT	SHEET No.	TOTAL SHEETS
07	LA	110	8.5/9.4	58	62

REGISTERED CIVIL ENGINEER

November 15, 2013
PLANS APPROVAL DATE

REGISTERED PROFESSIONAL ENGINEER
Stanley P. Johnson
No. C57793
Exp. 3-31-14
CIVIL
STATE OF CALIFORNIA

THE STATE OF CALIFORNIA OR ITS OFFICERS OR AGENTS SHALL NOT BE RESPONSIBLE FOR THE ACCURACY OR COMPLETENESS OF SCANNED COPIES OF THIS PLAN SHEET.

TO ACCOMPANY PLANS DATED 6-29-15

2010 REVISED STANDARD PLAN RSP ES-16B

POLE TYPE	POLE DATA				BASE PLATE DATA				CIDH	
	HEIGHT "h"	Min OD		THICKNESS	"C"	THICKNESS	ANCHOR BOLT SIZE	BC = BOLT CIRCLE	Dia	"d"
		BASE	TOP							
CCTV 25	25′	7⅜"	3¾"	0.1793"	1′-1"	1"	1½" ø x 36"	11½"	2′-6"	7′-0"
CCTV 30	30′	8"			1′-1½"			1′-0"		7′-6"
CCTV 35	35′	8⅝"			1′-2"			1′-1"		8′-0"
CCTV 40	40′	9⅜"			1′-3"			1′-1½"		8′-6"
CCTV 45	45′	10"						1′-2"		

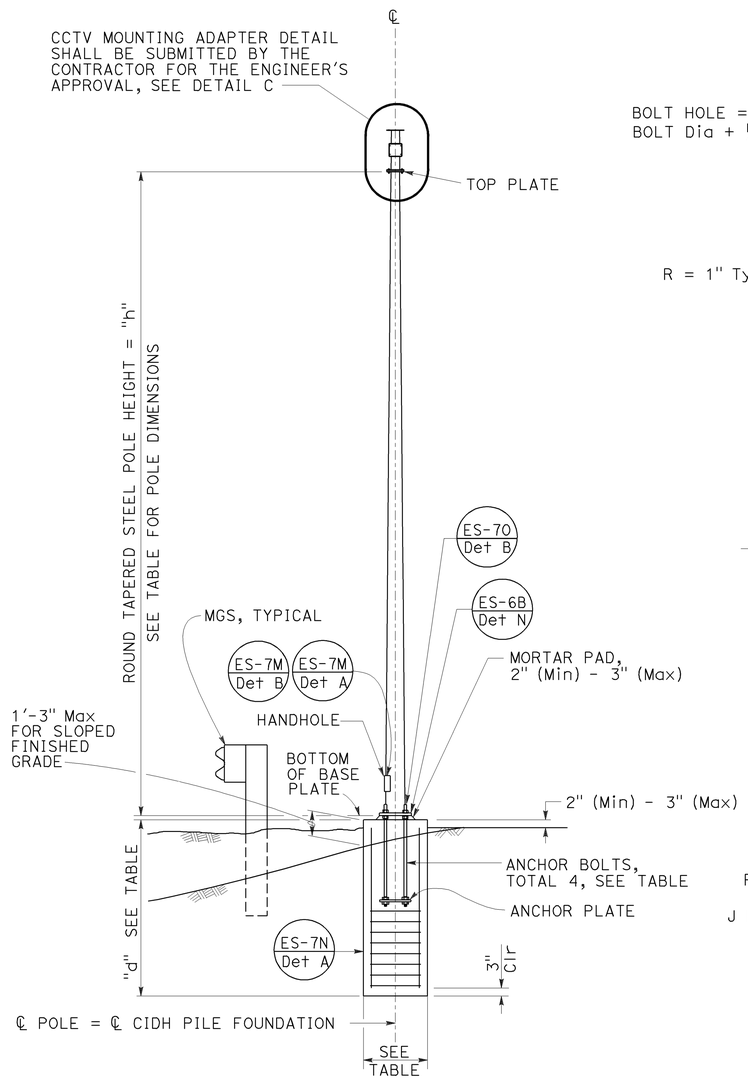

ELEVATION A

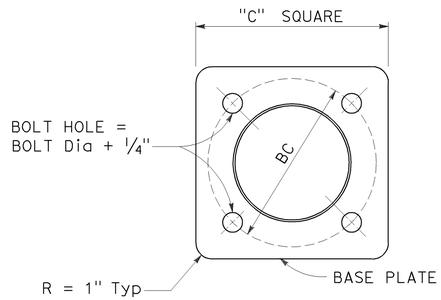

BASE PLATE

DETAIL A

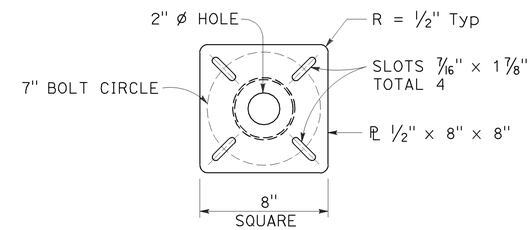

TOP PLATE

DETAIL B

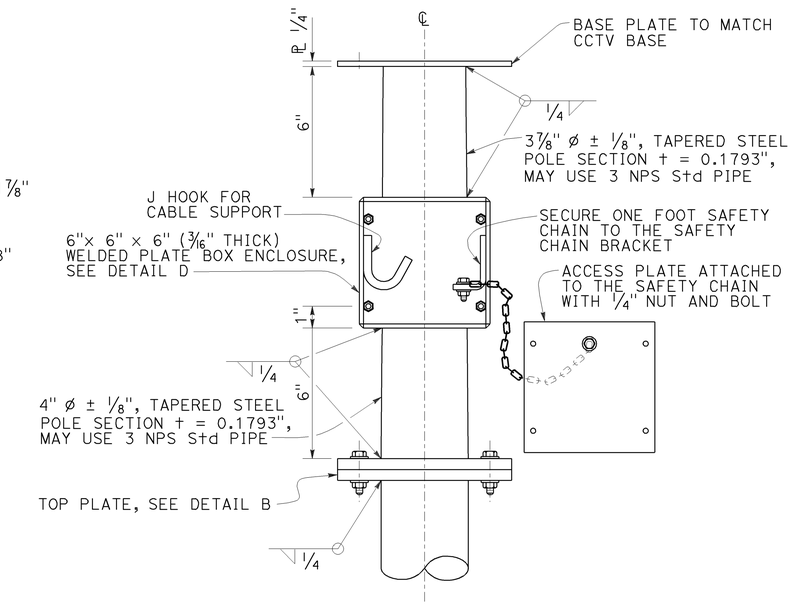

CLOSED CIRCUIT TELEVISION MOUNTING ADAPTER

DETAIL C

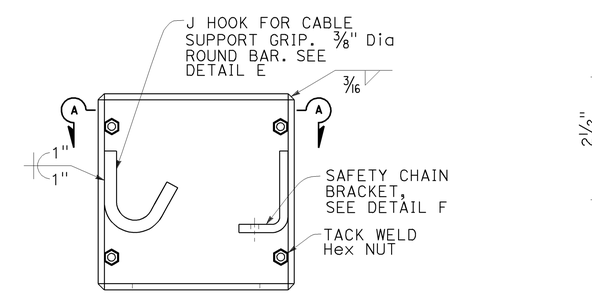

BOX ENCLOSURE

DETAIL D

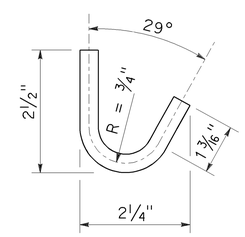

J HOOK

DETAIL E

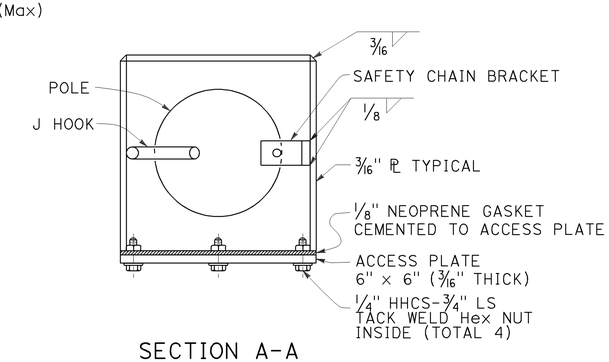

SECTION A-A

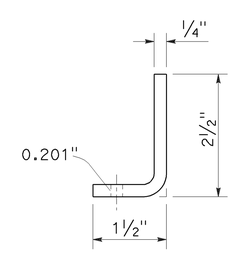

SAFETY CHAIN BRACKET

DETAIL F

NOTES:

1. The Contractor shall verify controlling field dimensions before ordering or fabricating any material.
2. During pole installation, the post shall be raked as necessary with the use of leveling nuts to provide a plumb pole axis.
3. Wind Loadings (3-second gust): 100 mph
4. Unit Stresses (Structural Steel):
   a. fy = 55,000 psi (tapered steel tube and anchor bolts)
   b. fy = 50,000 psi (unless otherwise noted)
5. Unit Stresses (Reinforced Concrete):
   a. f′c = 3,625 psi
   b. fy = 60,000 psi

STATE OF CALIFORNIA
DEPARTMENT OF TRANSPORTATION

ELECTRICAL SYSTEMS (CLOSED CIRCUIT TELEVISION, 25' TO 45' POLE)

NO SCALE

RSP ES-16B DATED NOVEMBER 15, 2013 SUPERSEDES STANDARD PLAN ES-16B DATED MAY 20, 2011 - PAGE 501 OF THE STANDARD PLANS BOOK DATED 2010.

REVISED STANDARD PLAN RSP ES-16B

10-4-13

Dist	COUNTY	ROUTE	POST MILES TOTAL PROJECT	SHEET No.	TOTAL SHEETS
07	LA	110	8.5/9.4	59	62

REGISTERED CIVIL ENGINEER

November 15, 2013
PLANS APPROVAL DATE

REGISTERED PROFESSIONAL ENGINEER Stanley P. Johnson No. C57793 Exp. 3-31-14 CIVIL STATE OF CALIFORNIA

THE STATE OF CALIFORNIA OR ITS OFFICERS OR AGENTS SHALL NOT BE RESPONSIBLE FOR THE ACCURACY OR COMPLETENESS OF SCANNED COPIES OF THIS PLAN SHEET.

TO ACCOMPANY PLANS DATED 6-29-15

2010 REVISED STANDARD PLAN RSP ES-16D

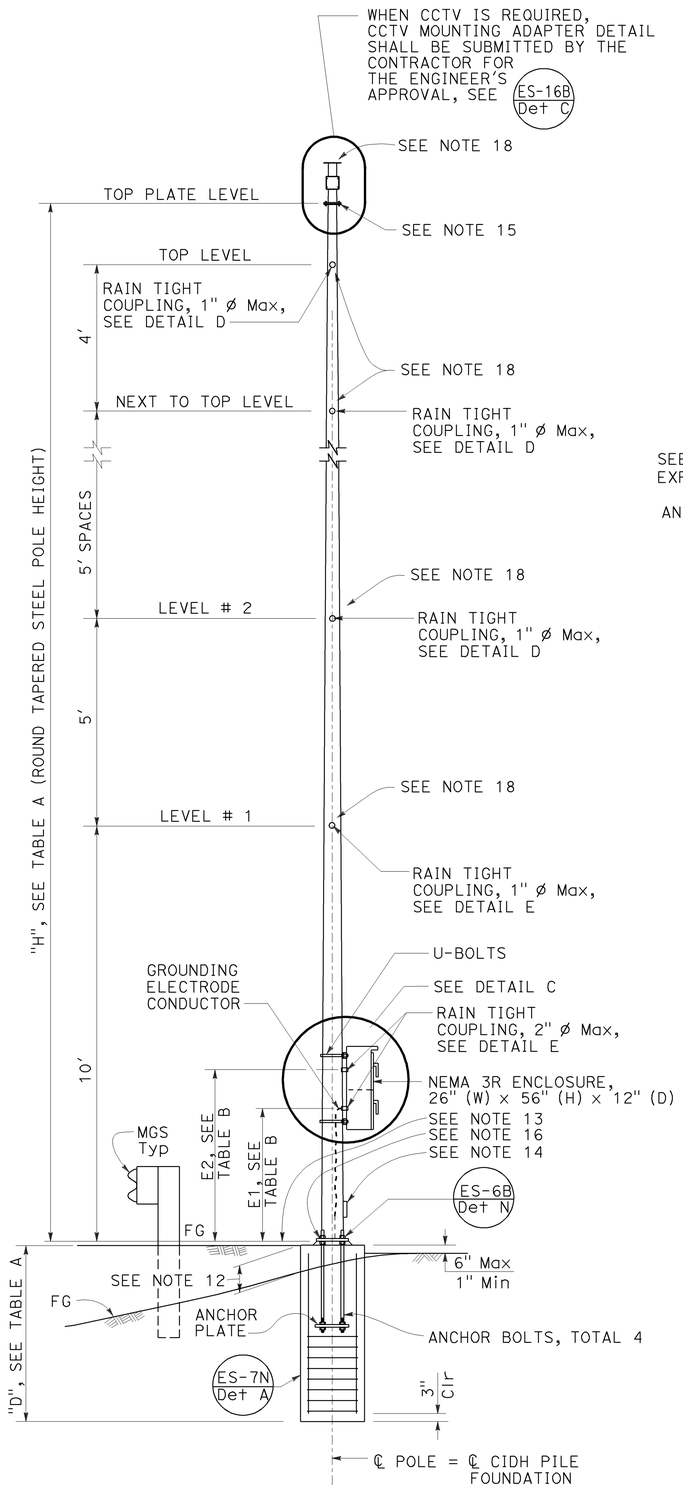

ELEVATION A

TABLE A

POLE TYPE	POLE DATA: HEIGHT "H"	Min OD BASE	Min OD TOP	THICKNESS	BASE PLATE DATA: "C"	THICKNESS	ANCHOR BOLTS SIZE	BC = BOLT CIRCLE	"D" 2'-6" ø CIDH Pile: LEVEL GROUND	UP TO 2:1
VDS 30	30'	8"	3⅞"	0.1793"	1'-1½"	1½"	1½" ø x 3'-0"	1'-1½"	11'-0"	13'-0"
VDS 35	35'	8⅝"			1'-2"			1'-2"	11'-0"	
VDS 40	40'	9⅜"			1'-3"			1'-3"	12'-0"	14'-0"

TABLE B

POLE TYPE	COUPLING E1(Max)	COUPLING E2(Max)
VDS 30	3'-6"	4'-9"
VDS 35		
VDS 40		

TABLE C

SPREAD FOOTING		
GROUND	FOOTING SIZE (LENGTH x WIDTH x DEPTH)	REINFORCEMENT TOP & BOTTOM
LEVEL	8'-6" x 8'-6" x 2'-0"	12 - #5 EW
UP TO 2:1	10'-0" x 10'-0" x 2'-0"	15 - #5 EW

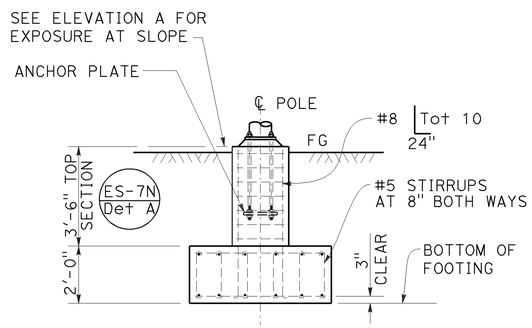

ALTERNATIVE FOOTING
ELEVATION B

TABLE D - LIMITATION ON ATTACHMENTS *

LOCATION	MAXIMUM TOTAL EPA PER LEVEL (SQUARE FEET)	MAXIMUM TOTAL WEIGHT (lb)
LEVEL #1	14	200
LEVEL #2		
LEVEL #3	10 ***	
LEVEL #4 (VDS 35 AND VDS 40 ONLY)	2.5	50
LEVEL #5 (VDS 40 ONLY)		
NEXT TO TOP LEVEL		
TOP LEVEL		
ON TOP PLATE LEVEL **		

* MAXIMUM HORIZONTAL EXTENT BEYOND POLE FACE IS 4 FEET.
** MAXIMUM EXTENT ABOVE TOP PLATE IS 3 FEET.
*** 14 IF LEVEL #1 IS ZERO.

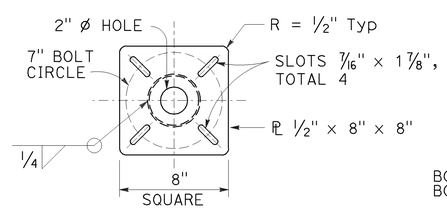

TOP PLATE
DETAIL A

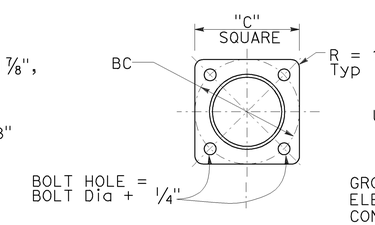

BASE PLATE
DETAIL B

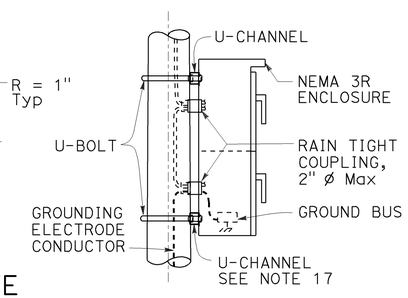

DETAIL C

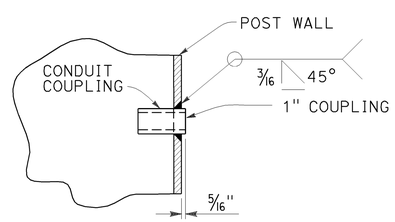

1" COUPLING
DETAIL D

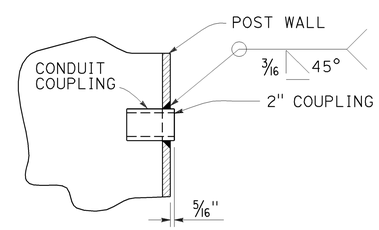

2" COUPLING
DETAIL E

NOTES:

1. All steel shall be galvanized after fabrication.
2. During pole installation the post shall be raked as necessary with the use of leveling nuts to provide a plumb pole axis.
3. The foundation shall be treated as level ground condition if the slope inclination is flatter than 4 : 1 (Horizontal : Vertical)
4. For devices mounted and mounting heights, see TABLE B.
5. Design Specification: AASHTO Standard Specification for structural support for highway signs, luminaires and traffic signal dated 2001.
6. Wind Loadings: 100 mph (3-second gust)
7. Unit Stresses (Structural Steel):
   a. fy = 55,000 psi (tapered steel tube)
   b. fy = 50,000 psi (unless otherwise noted)
8. Anchor bolts: fy = 55,000 psi
9. Unit Stresses (Reinforced Concrete):
   a. f'c = 3,600 psi
   b. fy = 60,000 psi
10. The Contractor shall verify all controlling field dimensions before ordering of fabricating any material.
11. When no barriers are used, the NEMA 3R enclosure shall be located on the downstream side and perpendicular to the roadway.
12. 1'-3" (Max) for sloped finished grade.
13. Bottom of base plate.
14. Handhole. (ES-7M Det B) (ES-7M Det A)
15. Top plate.
    Install a blank flange on the top plate when closed circuit television is not used.
16. (ES-7O Elev B)
17. U-channel with bracket.
18. Use the manufacturer's Effective Projected Area (EPA) for attachments. Assign attachments to nearest level and sum each level, see Table D for limitations.

STATE OF CALIFORNIA
DEPARTMENT OF TRANSPORTATION

ELECTRICAL SYSTEMS (CLOSED CIRCUIT TELEVISION WITH VEHICLE DETECTION SYSTEM, 30' TO 40' POLE)

NO SCALE

RSP ES-16D DATED NOVEMBER 15, 2013 SUPERSEDES RSP ES-16D DATED JULY 19, 2013 AND STANDARD PLAN ES-16D DATED MAY 20, 2011 - PAGE 503 OF THE STANDARD PLANS BOOK DATED 2010.

REVISED STANDARD PLAN RSP ES-16D

10-4-13

DIST	COUNTY	ROUTE	POST MILES TOTAL PROJECT	SHEET No.	TOTAL SHEETS
07	LA	101	8.5/9.4	60	62

REGISTERED CIVIL ENGINEER — DATE 03/26/15

6-29-15
PLANS APPROVAL DATE

REGISTERED PROFESSIONAL ENGINEER JUAN J. JAUREGUI JR. No. C63939 Exp. 9/30/16 CIVIL STATE OF CALIFORNIA

The State of California or its officers or agents shall not be responsible for the accuracy or completeness of electronic copies of this plan sheet.

STANDARD PLANS DATED 2010

SHEET NO.	TITLE
A10A	ABBREVIATIONS (SHEET 1 OF 2)
RSP A10B	ABBREVIATIONS (SHEET 2 OF 2)
ES-9B	ELECTRICAL SYSTEMS (CONDUIT RISER AND EXPANSION FITTING, STRUCTURE INSTALLATIONS)

STANDARD PLAN SHEET NO.

DETAIL NO.

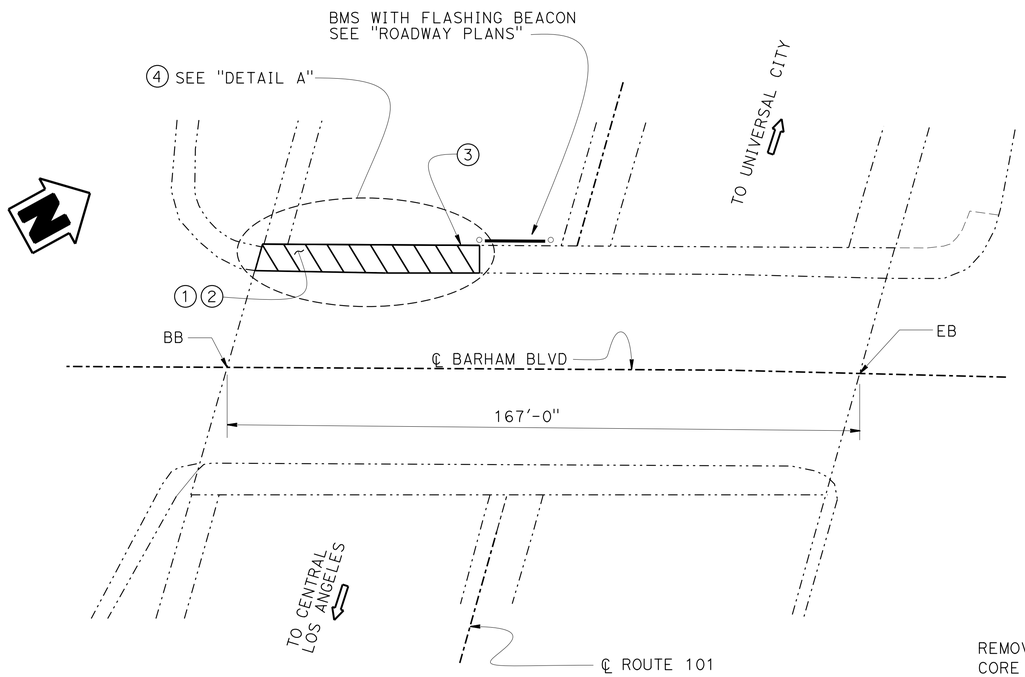

PLAN
1"=20'

QUANTITIES

REMOVE CONCRETE SIDEWALK (LF)	58 LF
CORE CONCRETE (3")	2.4 LF
MINOR CONCRETE (SIDEWALK)	3 CY
MISCELLANEOUS METAL (BRIDGE)	1 LB

INDEX TO PLANS

SHEET NO.	TITLE
1.	GENERAL PLAN
2.	MISCELLANEOUS DETAILS NO. 1
3.	MISCELLANEOUS DETAILS NO. 2

LEGEND:

INDICATES EXISTING STRUCTURE

INDICATES NEW STRUCTURE

ABBREVIATION:

BMS - BRIDGE MOUNTED SIGN

NOTES:

① REMOVE/REPLACE CONCRETE SIDEWALK.

② PLACE TWO 2" LIGHTING CONDUITS IN SIDEWALK, SEE "ROADWAY PLANS".

③ CORE CONCRETE (3")

④ FOR "DETAIL A", SEE "MISCELLANEOUS DETAILS NO. 1" SHEET.

NOTE:
THE CONTRACTOR MUST VERIFY ALL CONTROLLING FIELD DIMENSIONS BEFORE ORDERING OR FABRICATING ANY MATERIAL.

CONDUIT IN BRIDGE
BARHAM BLVD OVERCROSSING
GENERAL PLAN

JEFF WOODY
DESIGN ENGINEER

	BY	CHECKED			
DESIGN	JUAN JAUREGUI	JOHN DATILES			
DETAILS	JINLI GUO	JUAN JAUREGUI	LAYOUT	JINLI GUO	CHECKED
QUANTITIES	JUAN JAUREGUI	JOHN DATILES	SPECIFICATIONS	BY	PLANS AND SPECS COMPARED

STATE OF CALIFORNIA
DEPARTMENT OF TRANSPORTATION

DIVISION OF ENGINEERING SERVICES
STRUCTURE DESIGN
DESIGN BRANCH A

BRIDGE NO. 53-0466
POST MILE 9.22

ORIGINAL SCALE IN INCHES FOR REDUCED PLANS 0 1 2 3

UNIT: 3619
PROJECT NUMBER & PHASE: 0700020928-1
CONTRACT NO.: 07-287604

DISREGARD PRINTS BEARING EARLIER REVISION DATES

REVISION DATES: 1/26/15 3/3/15 3/9/15 3/25/15

SHEET 1 OF 3

STRUCTURES DESIGN GENERAL PLAN SHEET (ENGLISH) (REV.09-01-10)

FILE => 072876-a-gp-01.dgn

USERNAME => s127951 DATE PLOTTED => 24-SEP-2015 TIME PLOTTED => 14:56

DIST	COUNTY	ROUTE	POST MILES TOTAL PROJECT	SHEET No.	TOTAL SHEETS
07	LA	101	8.5/9.4	61	62

REGISTERED CIVIL ENGINEER 03/26/15 DATE

6-29-15
PLANS APPROVAL DATE

REGISTERED PROFESSIONAL ENGINEER JUAN J. JAUREGUI JR. No. C63939 Exp. 9/30/16 CIVIL STATE OF CALIFORNIA

The State of California or its officers or agents shall not be responsible for the accuracy or completeness of scanned copies of this plan sheet.

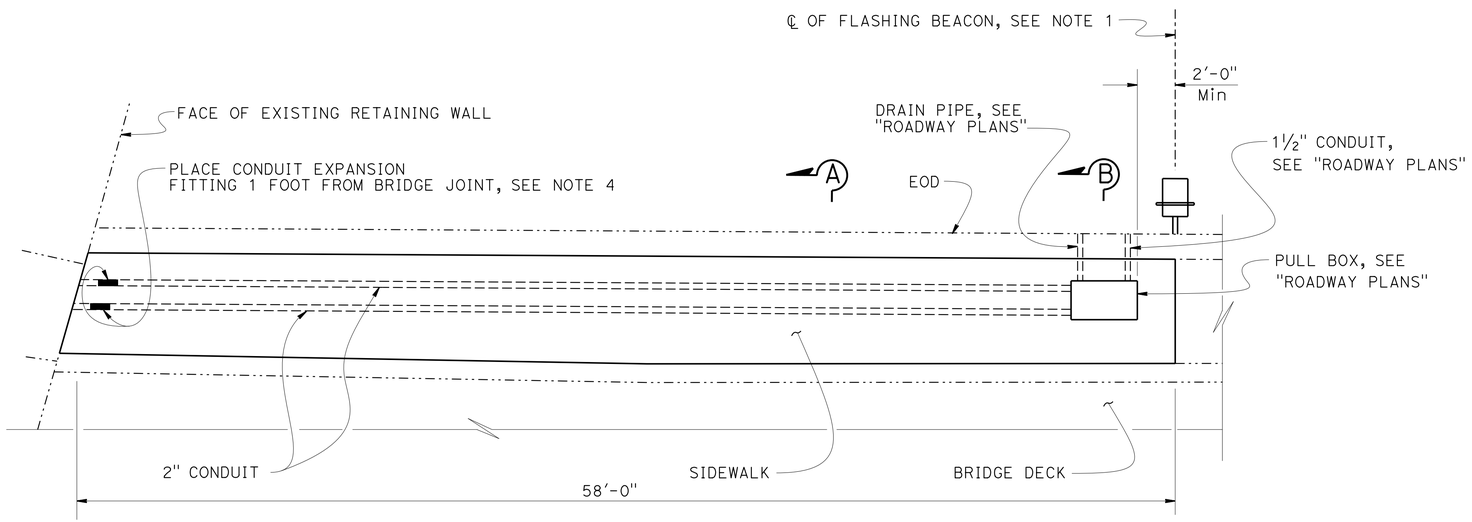

DETAIL A

NOTES:

1. FOR FLASHING BEACON, SEE "ROADWAY PLANS".
2. CAP ENDS OF 2" CONDUIT INTENDED FOR FUTURE USE.
3. FOR "DETAIL C" AND "DETAIL D", SEE "MISCELLANEOUS DETAILS NO. 2" SHEET
4. SEE 2010 STANDARD PLAN SHEET "ES-9B", "DETAIL X" FOR CONDUIT EXPANSION FITTING DETAIL.

LEGEND:

INDICATES EXISTING STRUCTURE

INDICATES NEW STRUCTURE

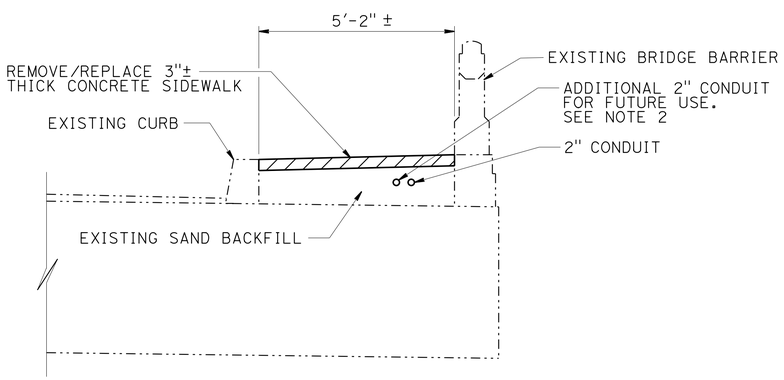

SECTION A-A
CONDUIT UNDER SIDEWALK

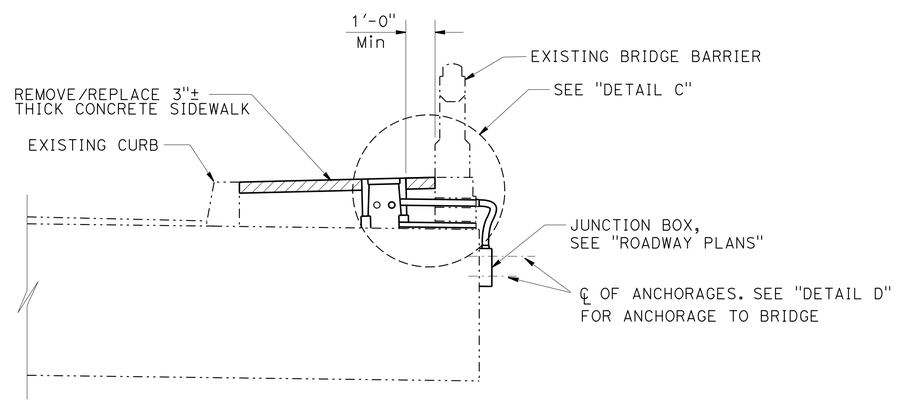

SECTION B-B
PULL BOX LOCATION
ON SIDEWALK

NOTE:
THE CONTRACTOR MUST VERIFY ALL CONTROLLING FIELD DIMENSIONS BEFORE ORDERING OR FABRICATING ANY MATERIAL.

NO SCALE

DESIGN	BY JUAN JAUREGUI	CHECKED JOHN DATILES	
DETAILS	BY JINLI GUO	CHECKED JUAN JAUREGUI	
QUANTITIES	BY JUAN JAUREGUI	CHECKED JOHN DATILES	

STATE OF CALIFORNIA
DEPARTMENT OF TRANSPORTATION

DIVISION OF ENGINEERING SERVICES
STRUCTURE DESIGN
DESIGN BRANCH A

BRIDGE NO. 53-0466
POST MILE 9.22

CONDUIT IN BRIDGE
BARHAM BLVD OVERCROSSING
MISCELLANEOUS DETAILS NO. 1

STRUCTURES DESIGN DETAIL SHEET (ENGLISH) (REV. 09-01-10)

ORIGINAL SCALE IN INCHES FOR REDUCED PLANS 0 1 2 3

UNIT: 3619
PROJECT NUMBER & PHASE: 0700020928-1 CONTRACT NO.: 07-287604

DISREGARD PRINTS BEARING EARLIER REVISION DATES

REVISION DATES 1-15-15 3/18/15 3/9/15 2/2/15

SHEET 2 OF 3

FILE => 2014/072876-b-detail-01.dgn

USERNAME => s127951 DATE PLOTTED => 24-SEP-2015 TIME PLOTTED => 14:56

DIST	COUNTY	ROUTE	POST MILES TOTAL PROJECT	SHEET No.	TOTAL SHEETS
07	LA	101	8.5/9.4	62	62

REGISTERED CIVIL ENGINEER 03/26/15 DATE

6-29-15
PLANS APPROVAL DATE

REGISTERED PROFESSIONAL ENGINEER JUAN J. JAUREGUI JR. No. C63939 Exp. 9/30/16 CIVIL STATE OF CALIFORNIA

The State of California or its officers or agents shall not be responsible for the accuracy or completeness of scanned copies of this plan sheet.

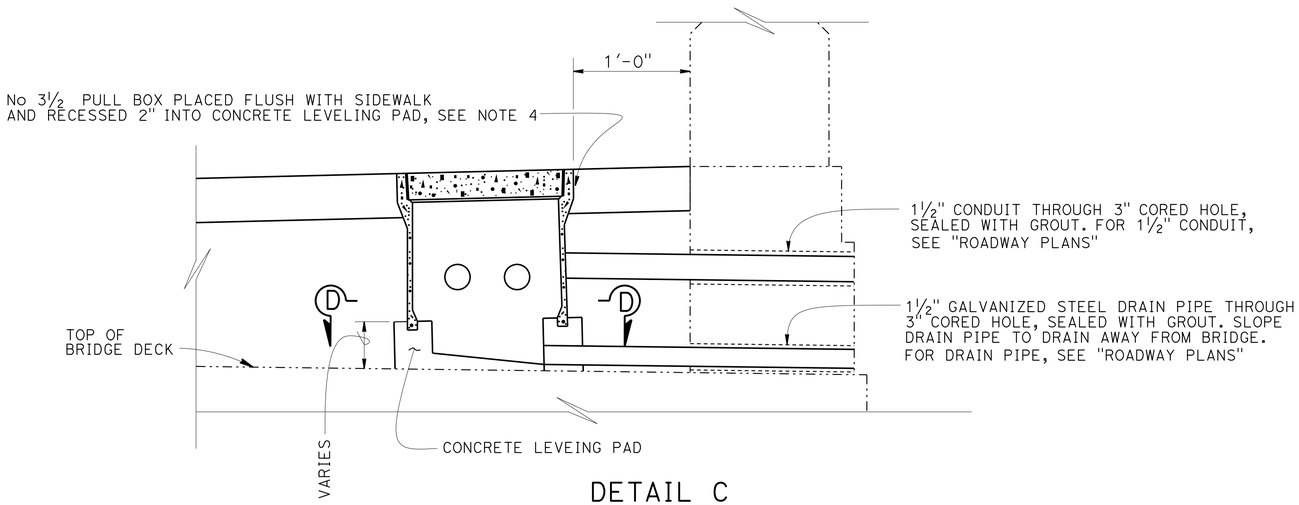

DETAIL C

NOTES:

1. THREADED MECHANICAL ANCHORS MUST BE GALVANIZED.
2. THREADED MECHANICAL ANCHOR STUDS MUST BE THE LARGEST DIAMETER THAT WILL PASS THROUGH THE MOUNTING HOLE IN CONDUIT CLAMP. MINIMUM STUD DIAMETER ¼". USE MINIMUM OF 4 ANCHORS PER JUNCTION BOX.
3. MECHANICAL EXPANSION ANCHORS MUST BE INSTALLED IN CONCRETE FREE OF CRACKS OR DELAMINATIONS.
4. PLACE 2-SACK CONCRETE SLURRY FOR AT LEAST 12" AROUND THE PULL BOX TO A HEIGHT OF 3" BELOW FINISH GRADE.

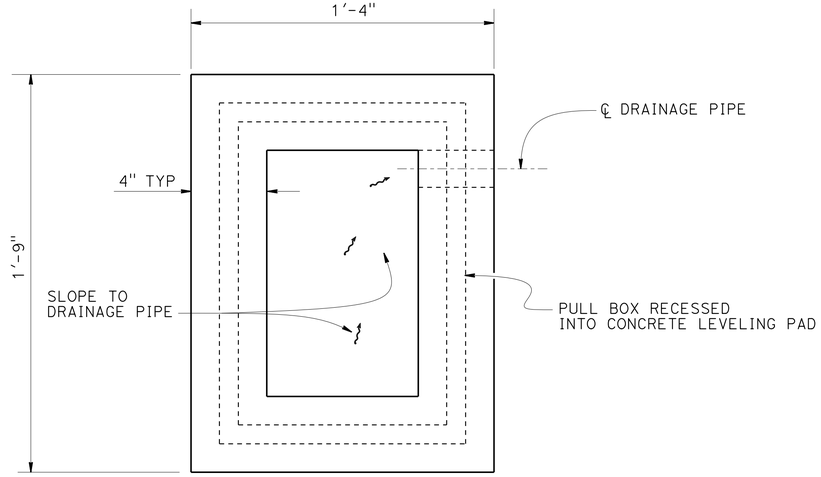

SECTION D-D
CONCRETE LEVELING PAD
FOR PULL BOX

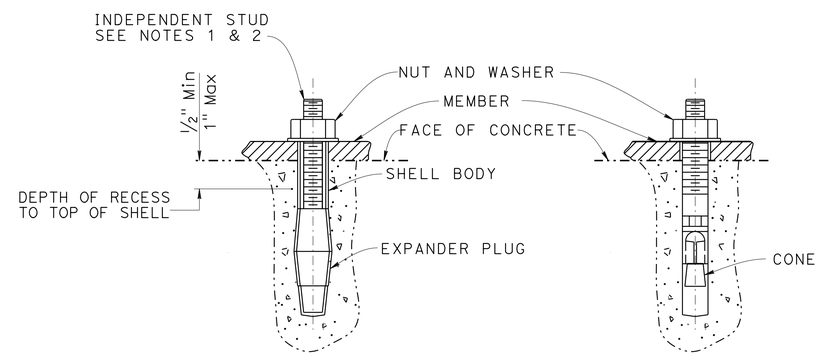

TYPICAL SHELL TYPE TYPICAL STUD TYPE

MECHANICAL EXPANSION ANCHOR BOLT

DETAIL D

NOTE:
THE CONTRACTOR MUST VERIFY ALL CONTROLLING FIELD DIMENSIONS BEFORE ORDERING OR FABRICATING ANY MATERIAL.

NO SCALE

DESIGN	BY JUAN JAUREGUI	CHECKED JOHN DATILES	
DETAILS	BY JINLI GUO	CHECKED JUAN JAUREGUI	
QUANTITIES	BY JUAN JAUREGUI	CHECKED JOHN DATILES	

STATE OF CALIFORNIA
DEPARTMENT OF TRANSPORTATION

DIVISION OF ENGINEERING SERVICES
STRUCTURE DESIGN
DESIGN BRANCH A

BRIDGE NO. 53-0466
POST MILE 9.22

CONDUIT IN BRIDGE
BARHAM BOULEVARD OVERCROSSING
MISCELLANEOUS DETAILS NO. 2

STRUCTURES DESIGN DETAIL SHEET (ENGLISH) (REV. 09-01-10)

ORIGINAL SCALE IN INCHES FOR REDUCED PLANS 0 1 2 3

UNIT: 3619
PROJECT NUMBER & PHASE: 0700020928-1
CONTRACT NO.: 07-287604

DISREGARD PRINTS BEARING EARLIER REVISION DATES

REVISION DATES 12/17/14 3/6/15 3/18/15 3/23/15

SHEET 3 OF 3

FILE => 072876-c-detail-02.dgn

USERNAME => s127951 DATE PLOTTED => 24-SEP-2015 TIME PLOTTED => 14:56