Dist	COUNTY	ROUTE	POST MILES TOTAL PROJECT	SHEET No.	TOTAL SHEETS
07	LA	60	R7.8	2	114

Medardo de la Cruz 2-3-12
REGISTERED CIVIL ENGINEER DATE

2-6-12
PLANS APPROVAL DATE

REGISTERED PROFESSIONAL ENGINEER MEDARDO DE LA CRUZ No. C61848 Exp. 6-30-13 CIVIL STATE OF CALIFORNIA

THE STATE OF CALIFORNIA OR ITS OFFICERS OR AGENTS SHALL NOT BE RESPONSIBLE FOR THE ACCURACY OR COMPLETENESS OF SCANNED COPIES OF THIS PLAN SHEET.

NOTES:

1. DIMENSIONS OF THE PAVEMENT STRUCTURES (STRUCTURAL SECTIONS) ARE SUBJECT TO TOLERANCES SPECIFIED IN THE STANDARD SPECIFICATIONS.
2. SUPERELEVATIONS AS SHOWN OR AS DIRECTED BY THE ENGINEER.
3. EXACT LOCATIONS AND TYPES OF CONCRETE BARRIER ARE SHOWN ON THE LAYOUTS.

ABBREVIATIONS:

RSC - RAPID STRENGTH CONCRETE
LCBRS - LEAN CONCRETE BASE RAPID SETTING

TYPICAL PAVEMENT STRUCTURE SECTIONS

PROPOSED

1
- 0.65' HMA (TYPE A)
- 0.70' LCBRS
- 1.35' CLASS 3 AB

2
- 0.95' JPCP (RSC)
- 0.50' LCBRS
- 0.70' CLASS 3 AB

5
- 1.05' JPCP (RSC)
- 0.50' LCBRS
- 0.70' CLASS 3 AB

8
- 0.50' HMA (TYPE A)

9
- 0.35' MINOR CONCRETE (TEXTURE PAVING)
- 0.15' CLASS 3 AB

Exist

3
- 0.33' AC (TYPE B)
- 0.50' CLASS A AGGREGATE
- 1.17' Var CLASS 4 AS

4
- 0.33' AC (TYPE B)
- 0.67' CLASS A CTB
- 0.42' CLASS A AGGREGATE
- 0.38' CLASS 4 AS

6
- 0.75' CLASS B PCC
- 0.33' CLASS A CTB
- 0.34' CLASS A AGGREGATE
- 0.58' CLASS 4 AS

7
- 0.33' AC (TYPE B)
- 0.67' CLASS A AGGREGATE
- 1.00' CLASS 4 AS

1

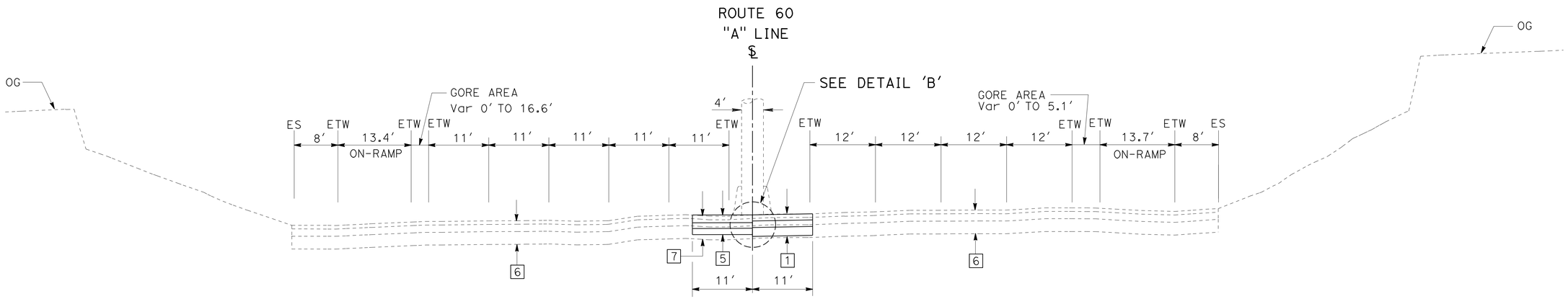

WESTBOUND
Sta 185+35 TO Sta 187+37

EASTBOUND
Sta 184+25 TO Sta 188+30

ROUTE 60

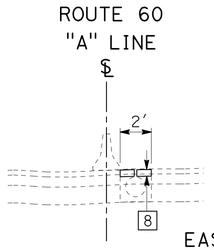

EASTBOUND
Sta 182+80 TO Sta 184+25

DETAIL 'B'

TYPICAL CROSS SECTIONS

NO SCALE

X-1

1 **REVISED PER ADDENDUM No. 1 DATED FEBRUARY 24, 2012**

STATE OF CALIFORNIA - DEPARTMENT OF TRANSPORTATION
Caltrans® OFFICE OF DESIGN A
FUNCTIONAL SUPERVISOR: ASADOUR TERTERIAN
CALCULATED-DESIGNED BY: KEDAR SAWANT
CHECKED BY: MEDARDO DE LA CRUZ
REVISED BY
DATE REVISED

LAST REVISION 00-00-00 | DATE PLOTTED => 24-FEB-2012 | TIME PLOTTED => 13:42

Dist	COUNTY	ROUTE	POST MILES TOTAL PROJECT	SHEET No.	TOTAL SHEETS
07	LA	60	R7.8	4	114

Medardo de la Cruz 2-3-12
REGISTERED CIVIL ENGINEER DATE

2-6-12
PLANS APPROVAL DATE

REGISTERED PROFESSIONAL ENGINEER MEDARDO DE LA CRUZ No. C61848 Exp. 6-30-13 CIVIL STATE OF CALIFORNIA

THE STATE OF CALIFORNIA OR ITS OFFICERS OR AGENTS SHALL NOT BE RESPONSIBLE FOR THE ACCURACY OR COMPLETENESS OF SCANNED COPIES OF THIS PLAN SHEET.

NOTE:

FOR ACCURATE RIGHT OF WAY DATA, CONTACT RIGHT OF WAY ENGINEERING AT DISTRICT OFFICE.

CURVE DATA

No. Ⓗ	R	Δ	T	L
1	2600.00′	18°34′27"	425.16′	842.87′
2	1300.00′	78°25′40"	1060.78′	1779.47′

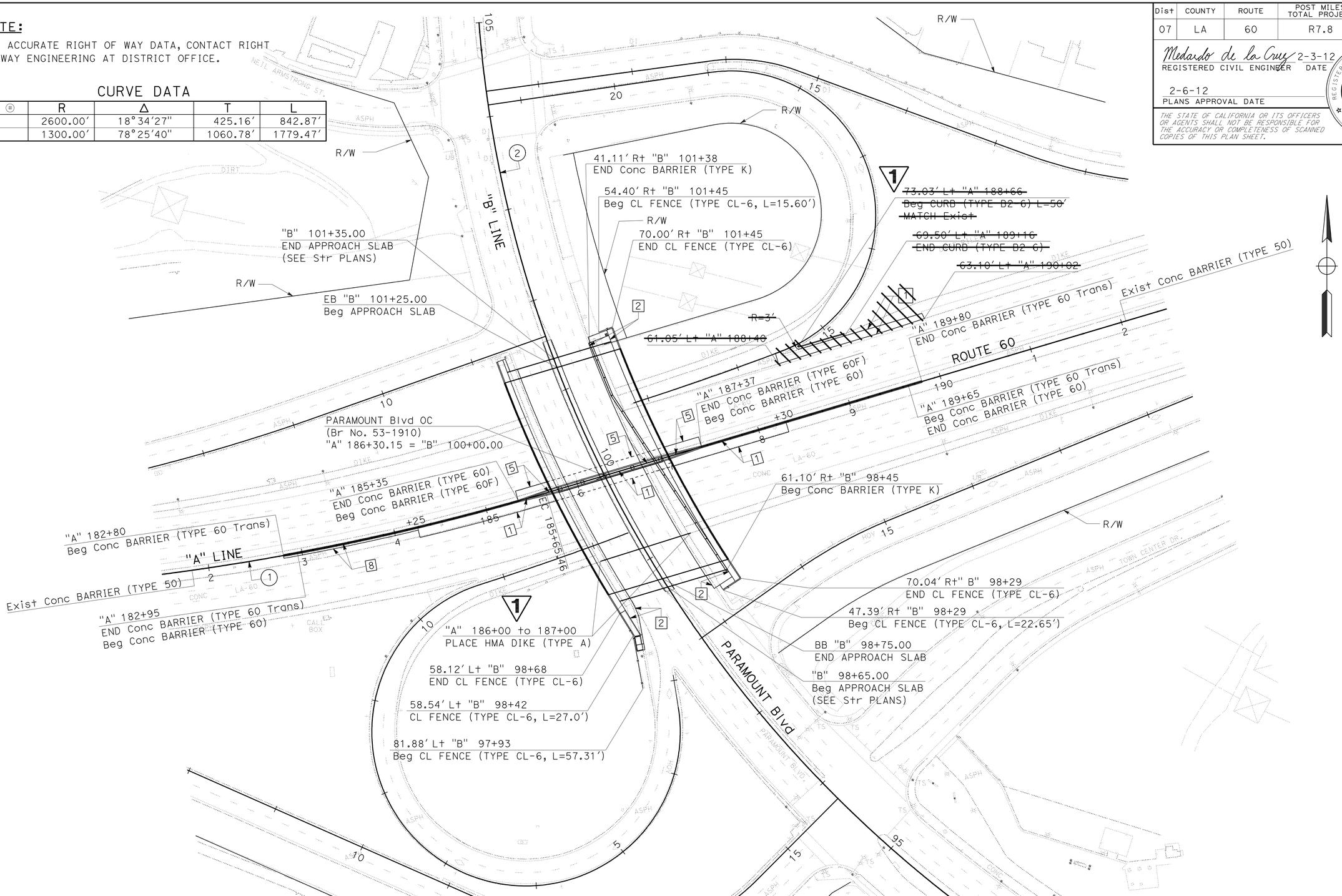

1 REVISED PER ADDENDUM No. 1 DATED FEBRUARY 24, 2012

LAYOUT
SCALE: 1" = 50′
L-1

STATE OF CALIFORNIA - DEPARTMENT OF TRANSPORTATION
Caltrans® OFFICE OF DESIGN A

FUNCTIONAL SUPERVISOR: ASADOUR TERTERIAN
CALCULATED-DESIGNED BY: KEDAR SAWANT
CHECKED BY: MEDARDO DE LA CRUZ
REVISED BY / DATE REVISED

LAST REVISION 00-00-00
DATE PLOTTED => 24-FEB-2012
TIME PLOTTED => 13:42

Dist	COUNTY	ROUTE	POST MILES TOTAL PROJECT	SHEET No.	TOTAL SHEETS
07	LA	60	R7.8	6	114

Medardo de la Cruz 2-3-12
REGISTERED CIVIL ENGINEER DATE

2-6-12
PLANS APPROVAL DATE

REGISTERED PROFESSIONAL ENGINEER
MEDARDO DE LA CRUZ
No. C61848
Exp. 6-30-13
CIVIL
STATE OF CALIFORNIA

THE STATE OF CALIFORNIA OR ITS OFFICERS OR AGENTS SHALL NOT BE RESPONSIBLE FOR THE ACCURACY OR COMPLETENESS OF SCANNED COPIES OF THIS PLAN SHEET.

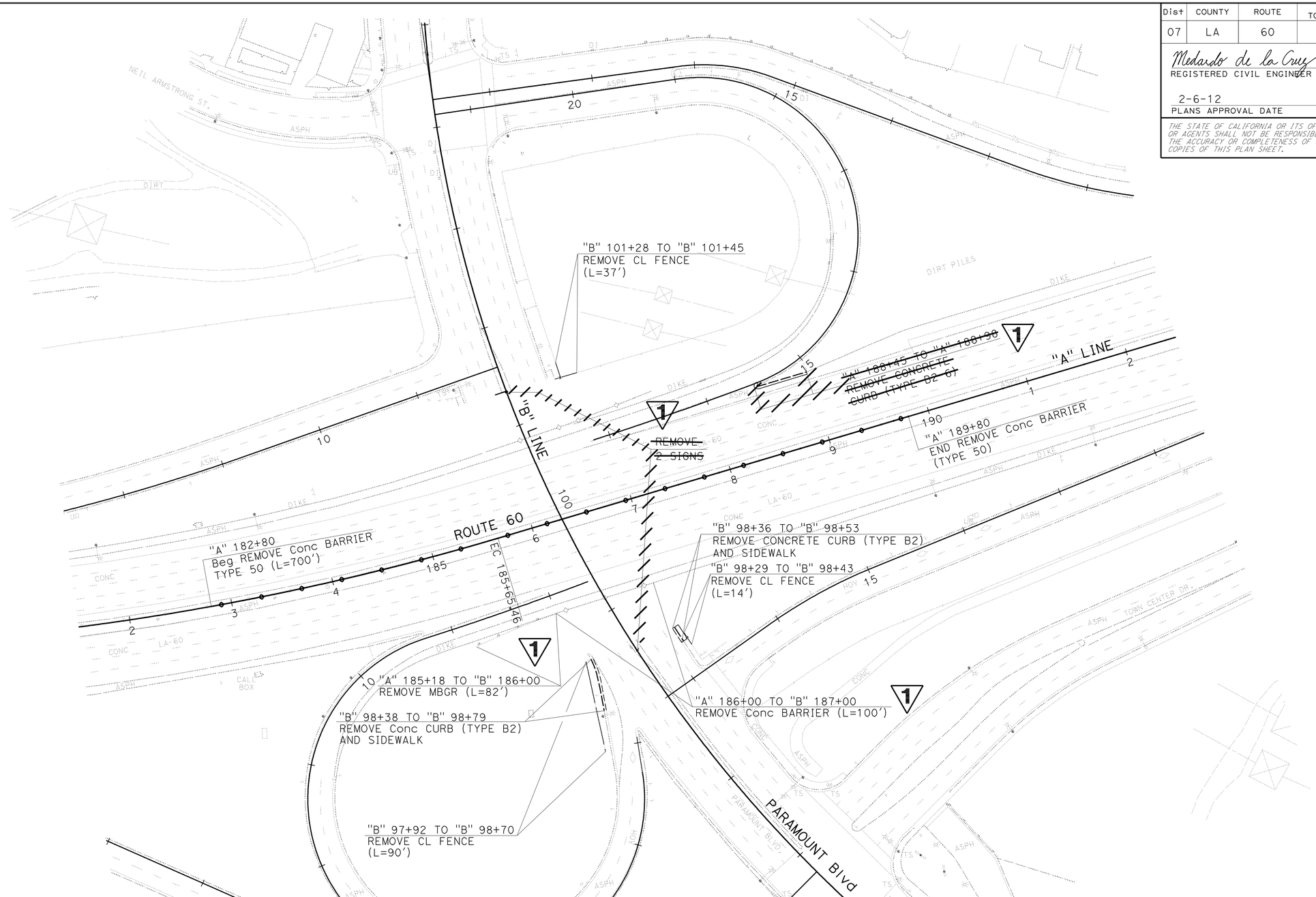

1 REVISED PER ADDENDUM No. 1 DATED FEBRUARY 24, 2012

CONSTRUCTION DETAILS
REMOVAL PLAN

SCALE: 1" = 50'

C-1

STATE OF CALIFORNIA - DEPARTMENT OF TRANSPORTATION
Caltrans® OFFICE OF DESIGN A

FUNCTIONAL SUPERVISOR: ASADOUR TERTERIAN
CALCULATED-DESIGNED BY: KEDAR SAWANT
CHECKED BY: MEDARDO DE LA CRUZ
REVISED BY
DATE REVISED

LAST REVISION
DATE PLOTTED => 24-FEB-2012
TIME PLOTTED => 14:07

Dist	COUNTY	ROUTE	POST MILES TOTAL PROJECT	SHEET No.	TOTAL SHEETS
07	LA	60	R7.8	21	114

Richard Lizardi 2-3-12
REGISTERED CIVIL ENGINEER DATE

2-6-12
PLANS APPROVAL DATE

REGISTERED PROFESSIONAL ENGINEER RICHARD LIZARDI No. C53407 Exp 6/30/13 CIVIL STATE OF CALIFORNIA

THE STATE OF CALIFORNIA OR ITS OFFICERS OR AGENTS SHALL NOT BE RESPONSIBLE FOR THE ACCURACY OR COMPLETENESS OF SCANNED COPIES OF THIS PLAN SHEET.

NOTE:

LOCATIONS OF TEMPORARY ROADSIDE SIGNS SHOWN ARE APPROXIMATE. EXACT LOCATIONS WILL BE DETERMINED BY THE ENGINEER.

LEGEND:

- CONSTRUCTION AREA
- (XX) PAVEMENT DELINEATION DETAIL NUMBER PER STANDARD PLANS
- DIRECTION OF TRAFFIC
- TEMPORARY ROADSIDE SIGN
- CHANNELIZER (SURFACE MOUNTED)
- TYPE III BARRICADE
- TEMPORARY RAILING (TYPE K) WITH SCUPPERS

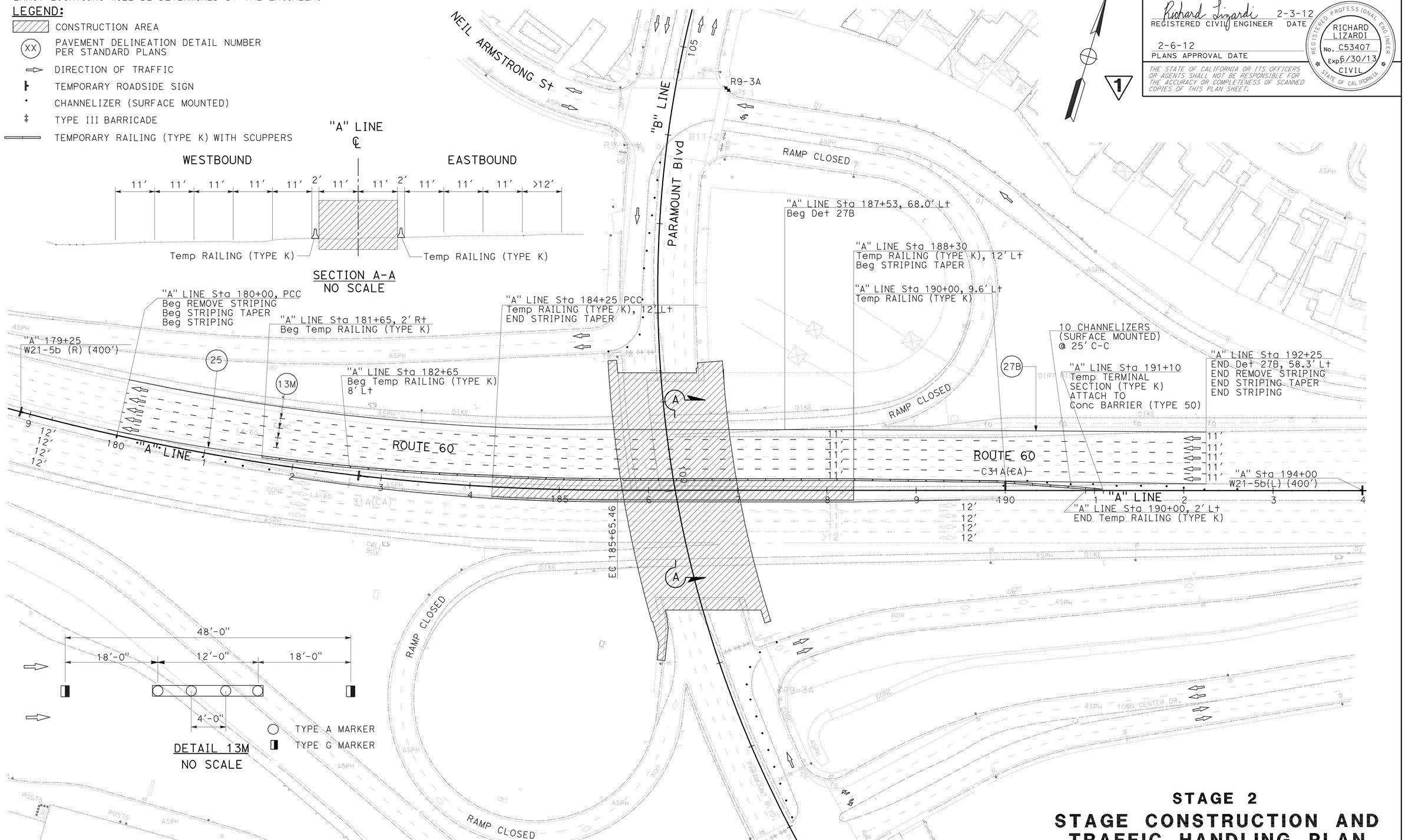

1 REVISED PER ADDENDUM No. 1 DATED FEBRUARY 24, 2012

APPROVED FOR STAGE CONSTRUCTION AND TRAFFIC HANDLING WORK ONLY

STAGE 2
STAGE CONSTRUCTION AND TRAFFIC HANDLING PLAN

SCALE: 1" = 50′

SC-2

STATE OF CALIFORNIA - DEPARTMENT OF TRANSPORTATION
Caltrans® OFFICE OF DESIGN A

FUNCTIONAL SUPERVISOR: ASADOUR TERTERIAN
CALCULATED-DESIGNED BY: RICHARD LIZARDI
CHECKED BY: ASADOUR TERTERIAN
REVISED BY / DATE REVISED

LAST REVISION 00-00-00 | DATE PLOTTED => 24-FEB-2012 | TIME PLOTTED => 13:42

Dist	COUNTY	ROUTE	POST MILES TOTAL PROJECT	SHEET No.	TOTAL SHEETS
07	LA	60	R7.8	22	114

Richard Lizardi 01/27/12
REGISTERED CIVIL ENGINEER DATE

2-6-12
PLANS APPROVAL DATE

REGISTERED PROFESSIONAL ENGINEER RICHARD LIZARDI No. C53407 Exp. 6/30/13 STATE OF CALIFORNIA

THE STATE OF CALIFORNIA OR ITS OFFICERS OR AGENTS SHALL NOT BE RESPONSIBLE FOR THE ACCURACY OR COMPLETENESS OF SCANNED COPIES OF THIS PLAN SHEET.

1

MAINLINE QUANTITIES

SHEET No.	DETAIL No./ PAVEMENT MARKING	PAVEMENT MARKER			PAINT TRAFFIC STRIPE (2-COAT)	REMOVE						TEMPORARY RAILING (TYPE K)	CHANNELIZER (SURFACE MOUNTED)	TEMPORARY TERMINAL SECTION (TYPE K)
						PAVEMENT MARKER								
		TYPE A (NON-REFLECTIVE)	RETRO-REFLECTIVE TYPE G	RETRO-REFLECTIVE TYPE H		TYPE A (NON-REFLECTIVE)	TYPE G	TYPE H	THERMOPLASTIC TRAFFIC STRIPE	YELLOW THERMOPLASTIC TRAFFIC STRIPE (HAZARDOUS WASTE)	PAINTED TRAFFIC STRIPE			
		EA	EA	EA	LF	EA	EA	EA	LF	LF	LF	LF	EA	EA
SC-2	13M	412	112		4,890	413	85		810			820	10	1
	25			33	1,225			25		495				
	27B				395						395			
	13M**					600	133				1,785			
	25 **							42		495				
	27B**										412			
SUB TOTAL			112	33		1,013	218	67						1
TOTAL		412*	145*		6,510	1,298*			810 *	990 *	2,592	820	10	1

* SEE PDQ-1 FOR GRAND TOTAL
** REMOVAL QUANTITY FOR FINAL PAVEMENT DELINEATION STRIPING

TEMPORARY ROADSIDE SIGN QUANTITIES (N)

SHEET No.	(N) SIGN CODE	PANEL SIZE	No. OF SIGNS (EA)	SIGN MESSAGE
SC-2	W21-5b (L)	48" x 48"	1	LEFT SHOULDER CLOSED 600 FT
	W21-5b (L)	48" x 48"	1	LEFT SHOULDER CLOSED 500 FT
	C31A (CA)	48" x 48"	2	NO SHOULDER
	R9-3A	24" x 24"	2	NO PEDESTRIAN CROSSING

(N) - NOT A SEPARATE PAY ITEM, FOR INFORMATION ONLY

STAGE CONSTRUCTION AND TRAFFIC HANDLING QUANTITIES

1 REVISED PER ADDENDUM No. 1 DATED FEBRUARY 24, 2012

SCQ-1

REVISED BY | DATE REVISED
RUDDY HARTONO | RICHARD LIZARDI
CALCULATED-DESIGNED BY | CHECKED BY
FUNCTIONAL SUPERVISOR
ASADOUR TERTERIAN
STATE OF CALIFORNIA - DEPARTMENT OF TRANSPORTATION
Caltrans® OFFICE OF DESIGN A

LAST REVISION 00-00-00 | DATE PLOTTED => 24-FEB-2012 TIME PLOTTED => 13:42

Dist	COUNTY	ROUTE	POST MILES TOTAL PROJECT	SHEET No.	TOTAL SHEETS
07	LA	60	R7.8	35	114

REGISTERED CIVIL ENGINEER 1/31/12 DATE

2-6-12
PLANS APPROVAL DATE

REGISTERED PROFESSIONAL ENGINEER EDGAR HERRERA No. C67603 Exp. 6-30-13 CIVIL STATE OF CALIFORNIA

THE STATE OF CALIFORNIA OR ITS OFFICERS OR AGENTS SHALL NOT BE RESPONSIBLE FOR THE ACCURACY OR COMPLETENESS OF SCANNED COPIES OF THIS PLAN SHEET.

NOTE:

FOR ADDITIONAL REMOVAL QUANTITIES SEE SHEET SCQ-1

	THERMOPLASTIC TRAFFIC STRIPE									THERMOPLASTIC PAVEMENT MARKING				1 PAVEMENT MARKER			1 REMOVE			
	4"							8"				12"			RETROREFLECTIVE					
SHEET No.	DETAIL 9 (BROKEN 17' - 7')	DETAIL 13M (BROKEN 36' - 12')	DETAIL 40 (BROKEN 6' - 1')	DETAIL 24 SOLID YELLOW STRIPE	DETAIL 25 SOLID YELLOW STRIPE	DETAIL 25A SOLID YELLOW STRIPE	DETAIL 27B SOLID WHITE STRIPE	DETAIL 36 SOLID WHITE	DETAIL 38A SOLID WHITE	ARROW	WORDS	DIAGONALS WHITE STRIPE	CROSSWALK/ LIMIT LINE	TYPE A NON-REFLECTIVE	TYPE G	TYPE H	THERMOPLASTIC TRAFFIC STRIPE	YELLOW THERMOPLASTIC TRAFFIC STRIPE (HAZARDOUS WASTE)	THERMOPLASTIC PAVEMENT MARKING	PAVEMENT MARKER
	LF	LF	LF	LF	LF	LF	LF	LF	LF	SQFT	SQFT	SQFT	SQFT	EA	EA	EA	LF	LF	SQFT	EA
PD-1	250					430	730	300			126				20	19	673	430	126	19
PD-2 *	4142	7150	170	1756	1975		970		676	516		363	180	596	245	42	2894	780	516	1756
SCQ-1														412	112	33	810	990		1298 1
SUBTOTAL	4392	7150	170	1756	1975	430	1700	300	676	516	126	363	180	1008	377	94	4377	2200	642	3073 1
TOTAL	4392	7150	170	5861				976		1185				1008	471		4377	2200	642	3073 1

* MAINLINE STRIPING NOT SHOWN ON PLANS

LEGEND:

- ○ TYPE A PAVEMENT MARKER
- ◨ TYPE G PAVEMENT MARKER
- ⇨ DIRECTION OF TRAVEL

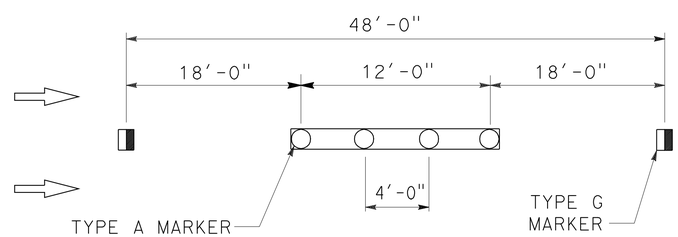

DETAIL 13M
NO SCALE

1 **REVISED PER ADDENDUM No. 1 DATED FEBRUARY 24, 2012**

PAVEMENT DELINEATION QUANTITIES AND DETAILS

PDQ-1

STATE OF CALIFORNIA - DEPARTMENT OF TRANSPORTATION
Caltrans® **TRAFFIC DESIGN**

FUNCTIONAL SUPERVISOR: GRISH BIGLARIAN
CALCULATED-DESIGNED BY: EDGAR HERRERA
CHECKED BY: GRISH BIGLARIAN
REVISED BY
DATE REVISED

LAST REVISION 00-00-00 | DATE PLOTTED => 24-FEB-2012 | TIME PLOTTED => 13:42

Dist	COUNTY	ROUTE	POST MILES TOTAL PROJECT	SHEET No.	TOTAL SHEETS
07	LA	60	R7.8	38	114

Medardo de la Cruz 2-3-12
REGISTERED CIVIL ENGINEER DATE

2-6-12
PLANS APPROVAL DATE

REGISTERED PROFESSIONAL ENGINEER MEDARDO DE LA CRUZ No. C61848 Exp. 6-30-13 CIVIL STATE OF CALIFORNIA

THE STATE OF CALIFORNIA OR ITS OFFICERS OR AGENTS SHALL NOT BE RESPONSIBLE FOR THE ACCURACY OR COMPLETENESS OF SCANNED COPIES OF THIS PLAN SHEET.

REMOVAL QUANTITIES 1

SHEET No.	LINE DESIGNATION	STATION	DIRECTION	REMOVE CONCRETE BARRIER	REMOVE CONCRETE	REMOVE CHAIN LINK FENCE	REMOVE METAL BEAM GUARD RAILING
				LF	LF	LF	LF
C-1	"A"	182+80 TO 189+80	EB-WB	800			87.5
C-1	"A"	188+45 TO 188+98	WB				
C-1	"B"	98+54	NB-SB				
C-1	"B"	101+35	NB-SB				
C-1	"B"	97+92 TO 98+70	SB			90	
C-1	"B"	98+38 TO 98+79	SB		41		
C-1	"B"	98+29 TO 98+43	NB			14	
C-1	"B"	98+36 TO 98+53	NB		17		
C-1	"B"	101+28 TO 101+45	NB			37	
TOTAL				800	58	141	87.5

TEMPORARY WATER POLLUTION CONTROL QUANTITIES

ITEM DESCRIPTION	UNIT	QUANTITY
TEMPORARY EROSION CONTROL BLANKET	SQYD	900
TEMPORARY FIBER ROLL	LF	1000
TEMPORARY SILT FENCE	LF	700
TEMPORARY GRAVEL BAG BERM	LF	1000
TEMPORARY CONSTRUCTION ENTRANCE	EA	2
TEMPORARY COVER	SQYD	600
TEMPORARY DRAINAGE INLET PROTECTION	EA	6

EARTHWORK QUANTITIES SUMMARY

SHEET No.	LINE DESIGNATION	STATION	DIRECTION	ROADWAY EXCAVATION	ROADWAY EMBANKMENT (N)
				CY	CY
L-1	"A"	185+60 TO 186+08	EB		50
L-1	"A"	184+25 TO 188+30	EB	396	
L-1	"A"	185+35 TO 187+37	WB	185	
1 ~~L-1~~	~~"A"~~	~~188+40 TO 190+02~~	~~WB~~	~~160~~	
TOTAL				581 ~~741~~	50

MISCELLANEOUS QUANTITIES

SHEET No.	LINE DESIGNATION	STATION	DIRECTION	CHAIN LINK FENCE (TYPE CL-6)	CONCRETE BARRIER (TYPE 60)	CONCRETE BARRIER (TYPE 60F)	CONCRETE BARRIER (TYPE K)
				LF	LF	LF	LF
L-1	"B"	97+93 TO 98+68	SB	85			
L-1	"B"	98+28.54 TO 98+28.81	NB	23			
L-1	"B"	101+44.91 TO 101+45.09	NB	16			
L-1	"A"	182+80 TO 189+80	EB-WB		498	202	
L-1	"B"	98+45 TO 101+38	NB				300
TOTAL				124	498	202	300

1 REVISED PER ADDENDUM No. 1 DATED FEBRUARY 24, 2012

SUMMARY OF QUANTITIES

Q-1

REVISED BY | DATE REVISED
KEDAR SAWANT | MEDARDO DE LA CRUZ
CALCULATED-DESIGNED BY | CHECKED BY
FUNCTIONAL SUPERVISOR: ASADOUR TERTERIAN

STATE OF CALIFORNIA - DEPARTMENT OF TRANSPORTATION
Caltrans® OFFICE OF DESIGN A

LAST REVISION 00-00-00 | DATE PLOTTED => 24-FEB-2012 | TIME PLOTTED => 13:42

Dist	COUNTY	ROUTE	POST MILES TOTAL PROJECT	SHEET No.	TOTAL SHEETS
07	LA	60	R7.8	39	114

Medardo de la Cruz 2-3-12
REGISTERED CIVIL ENGINEER DATE

2-6-12
PLANS APPROVAL DATE

REGISTERED PROFESSIONAL ENGINEER MEDARDO DE LA CRUZ No. C61848 Exp. 6-30-13 CIVIL STATE OF CALIFORNIA

THE STATE OF CALIFORNIA OR ITS OFFICERS OR AGENTS SHALL NOT BE RESPONSIBLE FOR THE ACCURACY OR COMPLETENESS OF SCANNED COPIES OF THIS PLAN SHEET.

1

PAVEMENT STRUCTURE QUANTITIES

SHEET No.	LINE DESIGNATION	STATION	DIRECTION	JOINTED PLAIN CONCRETE PAVEMENT (RAPID STRENGTH CONCRETE)	LEAN CONCRETE BASE RAPID SETTING	CLASS 3 AGGREGATE BASE	HOT MIX ASPHALT (TYPE A)	TACK COAT	REPAIR SPALLED JOINTS, POLYESTER GROUT	SEAL PAVEMENT JOINT	SEAL ISOLATION JOINT
				CY	CY	CY	TON	TON	SQYD	LF	LF
C-2	"B"	98+38 TO 98+75	SB	11.50	6.05	8.48					
C-2	"B"	98+36 TO 98+54	NB	10.10	5.32	7.44					
C-3	"B"	101+32 TO 101+38	NB	4.92	2.60	3.63					
L-1	"A"	182+80 TO 184+25	EB				10.74				
L-1	"A"	186+00 TO 187+00	EB				2.70				
L-1	"A"	184+25 TO 188+30	EB		116.00	223.00	210.20	0.30			
L-1	"A"	185+35 TO 187+37	WB	86.41	41.15	57.61			2.50	176	202
TOTAL				112.93	171.12	300.16	228.64	0.30	2.50	176	202

MINOR CONCRETE QUANTITIES

SHEET No.	LINE DESIGNATION	STATION	DIRECTION	MINOR CONCRETE (CURB, SIDEWALK AND CURB RAMP)						MINOR CONCRETE (TEXTURE PAVING)
				CURB TYPE A1-8	CURB TYPE A2-8	CURB TYPE B1-6	CURB TYPE B3-6	CURB RAMP *	SIDEWALK	MEDIAN ISLAND
				CY	CY	CY	CY	CY	CY	SQFT
C-2	"B"	98+23 TO 98+68	SB	0.94	0.62			1.40	2.00	
C-2	"B"	98+30 TO 98+36	NB	0.71					1.13	
C-2,3	"B"	98+59 TO 101+55	NB-SB			1.46	5.80			2603
C-3	"B"	101+37 TO 101+43	NB	0.65					1.54	
C-3	"B"	101+38 TO 101+46	SB	0.28					0.26	
SUB TOTAL				2.58	0.62	1.46	5.80	1.40	4.93	2603
TOTAL				16.79						2603

* INCLUDES RETAINING CURB

1 REVISED PER ADDENDUM No. 1 DATED FEBRUARY 24, 2012

SUMMARY OF QUANTITIES
Q-2

STATE OF CALIFORNIA - DEPARTMENT OF TRANSPORTATION
Caltrans OFFICE OF DESIGN A
FUNCTIONAL SUPERVISOR: ASADOUR TERTERIAN
CALCULATED-DESIGNED BY: KEDAR SAWANT
CHECKED BY: MEDARDO DE LA CRUZ
REVISED BY
DATE REVISED

LAST REVISION 00-00-00 | DATE PLOTTED => 24-FEB-2012 | TIME PLOTTED => 13:42

Dist	COUNTY	ROUTE	POST MILES TOTAL PROJECT	SHEET No.	TOTAL SHEETS
07	LA	60	R7.8	47	114

REGISTERED ELECTRICAL ENGINEER — 1/25/12 DATE

2-6-12
PLANS APPROVAL DATE

REGISTERED PROFESSIONAL ENGINEER — CECILIO BURCIAGA — No. E015302 — Exp. 03-31-13 — ELECTRICAL — STATE OF CALIFORNIA

THE STATE OF CALIFORNIA OR ITS OFFICERS OR AGENTS SHALL NOT BE RESPONSIBLE FOR THE ACCURACY OR COMPLETENESS OF SCANNED COPIES OF THIS PLAN SHEET.

1

NOTE:

FOR ACCURATE RIGHT OF WAY DATA, CONTACT RIGHT OF WAY ENGINEERING AT THE DISTRICT OFFICE.

PROJECT NOTES: (THIS SHEET ONLY)

1. RC sic, ADD 6PR#19 SIC, 1#8G.
2. INSTALL 2"C, 6PR#19 SIC, 1#8G IN CONCRETE BARRIER.
3. INSTALL 2"C, 6PR#19 SIC, 1#8G.

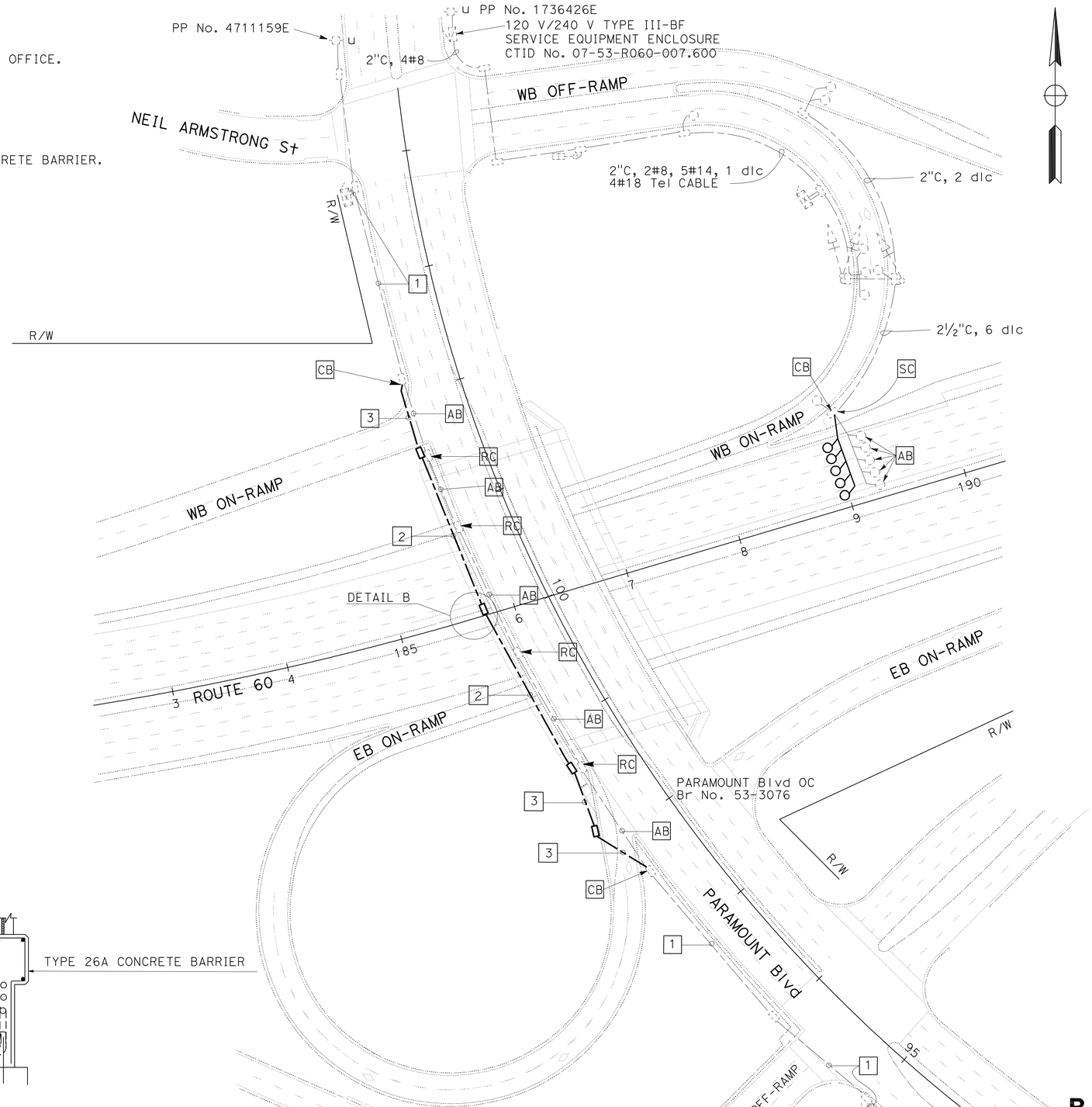

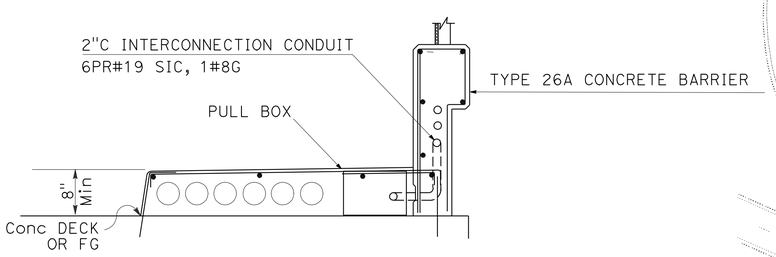

DETAIL B

NO SCALE

1 **REVISED PER ADDENDUM No. 1 DATED FEBRUARY 24, 2012**

APPROVED FOR ELECTRICAL WORK ONLY

MODIFY RAMP METERING SYSTEM INTERCONNECTION CONDUIT AND CABLE

SCALE: 1" = 50'

E-4

STATE OF CALIFORNIA - DEPARTMENT OF TRANSPORTATION
Caltrans® **TRAFFIC DESIGN**

FUNCTIONAL SUPERVISOR: YI TSAU
CALCULATED-DESIGNED BY: LUKE SUN
CHECKED BY: CECILIO BURCIAGA
REVISED BY
DATE REVISED

LAST REVISION 02-07-12 | DATE PLOTTED => 24-FEB-2012 | TIME PLOTTED => 13:42

BORDER LAST REVISED 7/2/2010 | USERNAME => s121614 | DGN FILE => 729390ua004.dgn | RELATIVE BORDER SCALE IS IN INCHES 0 1 2 3 | UNIT 1880 | PROJECT NUMBER & PHASE 07120002541

DIST	COUNTY	ROUTE	POST MILES TOTAL PROJECT	SHEET NO.	TOTAL SHEETS
07	LA	60	R7.8	81A	114

REGISTERED ELECTRICAL ENGINEER

October 5, 2007
PLANS APPROVAL DATE

REGISTERED PROFESSIONAL ENGINEER Jeffery G. McRae No. E14512 Exp. 6-30-08 ELECTRICAL STATE OF CALIFORNIA

The State of California or its officers or agents shall not be responsible for the accuracy or completeness of electronic copies of this plan sheet.

1

To accompany plans dated 2-6-12

LOOP INSTALLATION PROCEDURE

1. Loops shall be centered in lanes.
2. Saw slots in pavement for loop conductors as shown in details.
3. Distance between side of loop and a lead-in saw cut from adjacent detectors shall be 2'-0" minimum. Distance between lead-in saw cuts shall be 6" minimum.
4. Bottom of saw slot shall be smooth with no sharp edges.
5. Slots shall be washed until clean, blown out and thoroughly dried before installing loop conductors.
6. Adjacent loops on the same sensor unit channel shall be wound in opposite directions.
7. Identify and tag loop circuit pairs in the pull box with loop number, start (S) and finish (F) of conductor. Identify and tag lead-in-cable with sensor number and phase.
8. Install loop conductor in slot using a 3/16" to 1/4" thick wood paddle. Hold loop conductors with wood paddles (at the bottom of the sawed slot) during sealant placement.
9. No more than 2 twisted pairs shall be installed in one sawed slot.
10. Allow additional 5'-0" of slack length of conductor for the lead-in run to pull box.
11. The additional length of each conductor for each loop shall be twisted together into a pair (6 turns per 3'-4" minimum) before being placed in the slot and conduit leading to pull box.
12. Test each loop circuit for continuity, circuit resistance and insulation resistance at the pull box before filling slots.
13. Fill slots as shown in details.
14. Splice loop conductors to lead-in-cable. Splices shall be soldered.
15. End of lead-in-cable and Type 2 loop conductor shall be waterproofed prior to installing in conduit to prevent moisture from entering the cable.
16. Lead-in-cable shall not be spliced between the pull box and the controller cabinet terminals.
17. Test each loop circuit for continuity, circuit resistance and insulation resistance at the controller cabinet location.
18. Where loop conductors are not to be spliced to a lead-in-cable, the ends of the conductors shall be taped and waterproofed with electrical insulating coating.

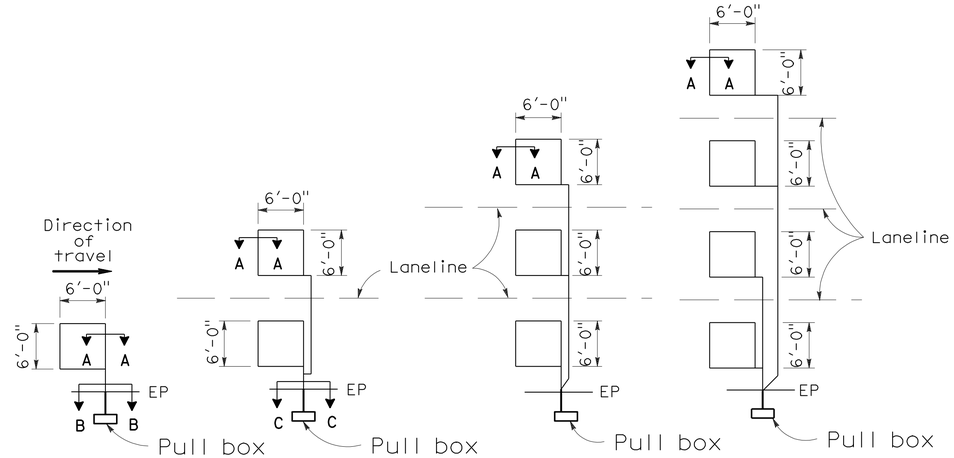

TYPE 1A INSTALLATION | TYPE 2A INSTALLATION | TYPE 3A INSTALLATION | TYPE 4A INSTALLATION

SAWCUT DETAILS

(Type A loop detector configurations illustrated)

1. 1A thru 4A = 1 Type A loop configuration in each lane.
2. 1B thru 4B = 1 Type B loop configuration in each lane.
3. 1C = 1 Type C loop configuration entering lanes as required.
4. 1D thru 4D = 1 Type D loop configuration in each lane.
5. 1E thru 4E = 1 Type E loop configuration in each lane.
6. 1Q thru 4Q = 1 Type Q loop configuration in each lane. (Use Type A, B, C, D, E or Q loop detector configurations only when specified or shown on plans)

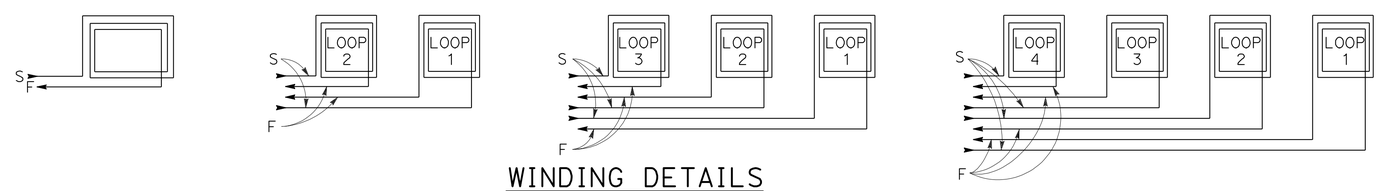

WINDING DETAILS

See Notes 6 and 7

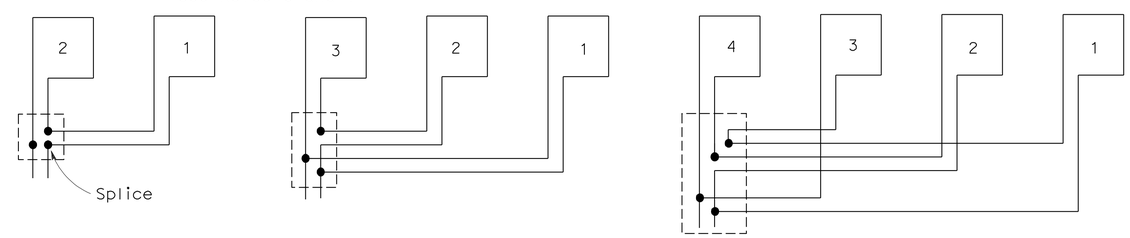

TYPICAL LOOP CONNECTIONS

(Dashed lines represent the pull box)

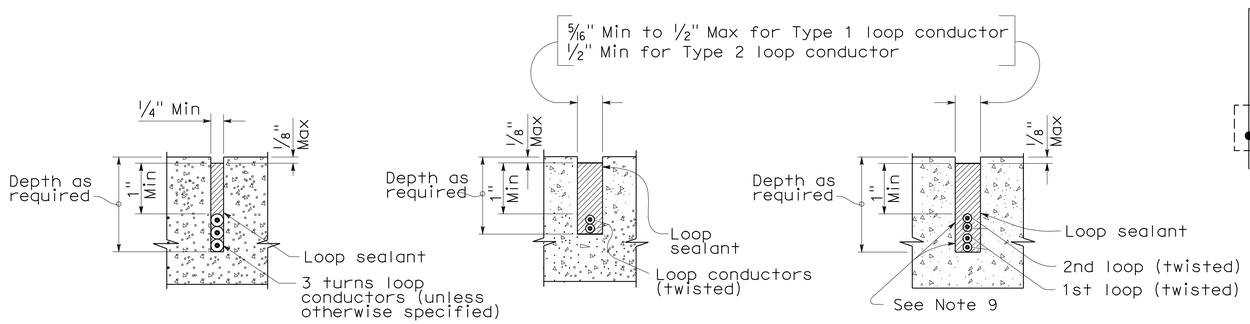

SECTION A-A | SECTION B-B | SECTION C-C

SLOT DETAILS - TYPE 1 AND TYPE 2 LOOP CONDUCTOR

1 **ADDED PER ADDENDUM No. 1 DATED FEBRUARY 24, 2012**

STATE OF CALIFORNIA
DEPARTMENT OF TRANSPORTATION

ELECTRICAL SYSTEMS (DETECTORS)

NO SCALE

RSP ES-5A DATED OCTOBER 5, 2007 SUPERCEDES STANDARD PLAN ES-5A DATED MAY 1, 2006 - PAGE 423 OF THE STANDARD PLANS BOOK DATED MAY 2006.

REVISED STANDARD PLAN RSP ES-5A

2006 REVISED STANDARD PLAN RSP ES-5A

8-17-07

DIST	COUNTY	ROUTE	POST MILES TOTAL PROJECT	SHEET No.	TOTAL SHEETS
07	LA	60	R7.8	89	114

Dawit Tadella Geez 01/20/12
REGISTERED CIVIL ENGINEER DATE

2-6-12
PLANS APPROVAL DATE

REGISTERED PROFESSIONAL ENGINEER
Dawit T Worku
No. C60711
Exp. 12-31-12
CIVIL
STATE OF CALIFORNIA

The State of California or its officers or agents shall not be responsible for the accuracy or completeness of electronic copies of this plan sheet.

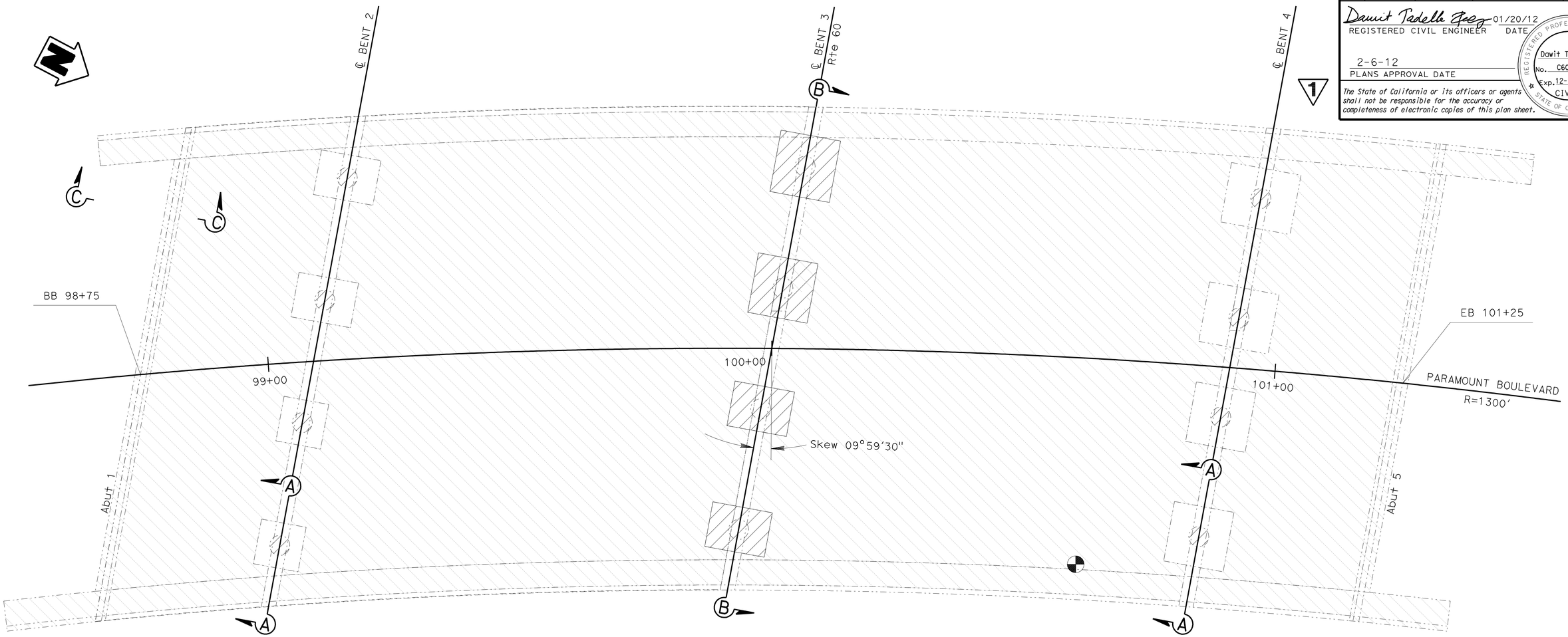

DEMOLITION PLAN

1" = 10'

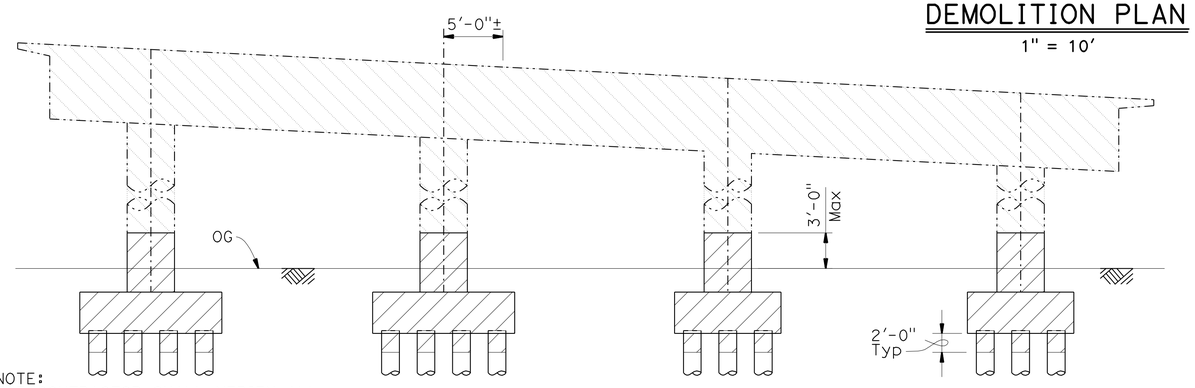

SECTION B-B

No Scale

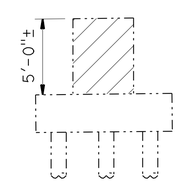

SECTION A-A

No Scale

SEE NOTE 1

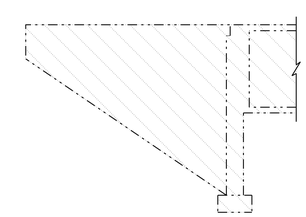

SECTION C-C

No Scale

NOTES:

1. Remove only column for Bent 2 and Bent 4 (Pile cap and piles to remain)

Removed Structure

Remaining Structure to be removed

NOTE:
THE CONTRACTOR SHALL VERIFY ALL CONTROLLING FIELD DIMENSIONS BEFORE ORDERING OR FABRICATING ANY MATERIAL.

1 REVISED PER ADDENDUM No. 1 DATED FEBRUARY 24, 2012

	BY	CHECKED
DESIGN	Kumar Ghosh	Dawit Worku
DETAILS	Paulo Perez	Dawit Worku
QUANTITIES	H. Iraninejadian	Brijesh Patel

STATE OF CALIFORNIA
DEPARTMENT OF TRANSPORTATION

DIVISION OF ENGINEERING SERVICES
STRUCTURE DESIGN
DESIGN BRANCH 20

BRIDGE NO. 53-3076
POST MILE R 7.8

PARAMOUNT BLVD OC (REPLACE)
CONCRETE REMOVAL

STRUCTURES DESIGN DETAIL SHEET (ENGLISH) (REV. 09-01-10)

ORIGINAL SCALE IN INCHES FOR REDUCED PLANS 0 1 2 3

UNIT: 3622
PROJECT NUMBER & PHASE: 0712000254 1
CONTRACT NO.: 07-293901

DISREGARD PRINTS BEARING EARLIER REVISION DATES

REVISION DATES: 12/30/11 01/20/12

SHEET 5 OF 27

FILE => 53-3076-e-rem_conc.dgn

USERNAME => s137614 DATE PLOTTED => 24-FEB-2012 TIME PLOTTED => 13:43