INFORMATION HANDOUT

For Contract No. 07-2W6504
At 07-LA-57, 60, 71- Var

Identified by
Project ID 0713000431

MATERIALS INFORMATION

Fiber Optical System As-Built Drawings

DIST	COUNTY	ROUTE	KILOMETER POST / TOTAL PROJECT	SHEET NO	TOTAL SHEETS
07	LA	57,60	R5.2/R7.3, R36.1/R40.0	543	863

Conway Chu — REGISTERED ELECTRICAL ENGINEER — 10/7/02

12-2-02
PLANS APPROVAL DATE

CONWAY CHU No. E15305 EXP. 3/31/05 ELECTRICAL REGISTERED PROFESSIONAL ENGINEER STATE OF CALIFORNIA

The State of California or its officers or agents shall not be responsible for the accuracy or completeness of electronic copies of this plan sheet

Caltrans now has a web site. To get to the web site, go to: http://www.dot.ca.gov

Caltrans Metric

LEGEND: (FOR E-46 TO E-97)

- TYPE 334-TV CABINET OR VIDEO NODE
- SPLICE VAULT
- COMMUNICATION PULL BOX
- EXISTING COMMUNICATION PULL BOX
- EXISTING CCTV CABINET OR CABLE NODE
- EXISTING SPLICE VAULT
- DELIMITER FOR CONSTRUCTION NOTES — EXAMPLE:

- FIBER OTPIC CABLE
- INDUCTIVE LOOP DETECTOR TYPE E
- EXISTING INDUCTIVE LOOP DETECTOR TYPE E
- EXISTING CCTV CAMERA AND POLE

EQUIPMENT IDENTIFICATION

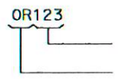

CONSTRUCTION NOTES: (FOR E-46 TO E-60)

1. TRENCH AND INSTALL CONDUIT IN UNPAVED AREA.
2. TRENCH AND INSTALL CONDUIT IN ASPHALT.
3. JACK TYPE 1 CONDUIT BENEATH ROADWAY.
4. ATTACH CONDUIT TO STRUCTURE. SEE BRIDGE STRUCTURE PLANS FOR BRIDGE ATTACHMENT TYPE AND DETAILS.
5. TERMINATE 6P22 CABLE IN CONTROLLER CABINET. SEE SHEET E-78 FOR DETAILS.
6. COIL 10 m OF 6P22 CABLE FOR FUTURE CONNECTION TO TRAFFIC SIGNAL CONTROLLER CABINET.
7. COIL 10 m OF 12SMFO CABLE FOR FUTURE CONNECTION TO IRRIGATON CONTROLLER ENCLOSURE CABINET.
8. TRENCH AND INSTALL CONDUIT IN NEW PCC. SEE SHEET E-71 FOR DETAILS.
9. SHOWN FOR REFERENCE ONLY. FOR INSTALLATION REFER TO LOCATION PLAN.
10. RC EXISTING CABLES AND INNERDUCTS. INSTALL NEW CABLES AND INNERDUCTS AS SHOWN ON PLAN.
11. INSTALL TWISTED PAIR SPLICE CLOSURE IN NEW COMMUNICATION PULL BOX.
12. INSTALL FIBER OPTIC SPLICE CLOSURE IN EXISTING SPLICE VAULT.

GENERAL NOTES: (FOR E-46 TO E-69)

1. THE LOCATION OF EXISTING CONTROLLER CABINETS, EXISTING SERVICE EQUIPMENT ENCLOSURES, AND POWER POLES ARE APPROXIMATE. THE LOCATION OF PROPOSED PULL BOXES AND SPLICE VAULTS ARE APPROXIMATE AND MAY BE CHANGED TO SUIT FIELD CONDITIONS AS DIRECTED BY THE ENGINEER.
2. BEFORE REMOVING OR MODIFYING ANY EXISTING ELECTRICAL FACILITIES, THE CONTRACTOR SHALL PROVIDE 72-HOUR ADVANCE WRITTEN NOTICE TO ALL CONCERNED AGENCIES.
3. UNLESS OTHERWISE NOTED, ALL COMMUNICATION CONDUIT BENDS SHALL BE 1.3 m RADIUS FACTORY BENDS.
4. COMMUNICATION CONDUIT SHALL BE CENTERED IN THE PAVED SHOULDER OR AS SHOWN ON THESE PLANS OR AS DIRECTED BY THE ENGINEER.
5. ALL PULL BOXES AND SPLICE VAULTS SHALL BE INSTALLED IN UNPAVED AREA UNLESS OTHERWISE NOTED.
6. ALL SPLICE VAULTS SHALL BE INSTALLED WITH 1 FIBER OPTIC SPLICE CLOSURE UNLESS OTHERWISE NOTED.
7. ALL EXISTING COMMUNICATION CABLES WHERE SHOWN ON THE PLANS TO BE REMOVED SHALL BE REINSTALLED OR REPLACED AND SPLICED TO THE SAME ASSIGNED TWISTED PAIR AND/OR FIBER NUMBER.
8. INSTALL PULL ROPE AND PLUG ENDS EACH UNUSED INNERDUCT.
9. INSTALL SPARE 103C WITH PULL ROPE.

TABLE 1 - CCTV WIRING

CONDUCTOR TYPE	FUNCTION	QUANTITY
RG-6A/U COAXIAL CABLE	CAMERA VIDEO INTERFACE CABLE	1
RS232 (5#22) CABLE	CAMERA CONTROL CABLE	1
3#18	POWER CABLE	1

ABBREVIATIONS: (FOR E-46 TO E-97)

#	NUMBER
12SMFO	12 SINGLEMODE FIBER OPTIC CABLE
36SMFO	36 SINGLEMODE FIBER OPTIC CABLE
48SMFO	48 SINGLEMODE FIBER OPTIC CABLE
72SMFO	72 SINGLEMODE FIBER OPTIC CABLE
6P22	6 PAIR 22AWG TWISTED PAIR CABLE
50P22	50 PAIR 22AWG TWISTED PAIR CABLE
AVC	AUTOMATIC VEHICLE CLASSIFICATION
AWG	AMERICAN WIRE GAUGE
CCR	CAMERA CONTROL RECEIVER
CTS	CLEAR TO SEND
FDU	FIBER DISTRIBUTION UNIT
F/O	FIBER OPTIC
FODM	FIBER OPTIC DATA MODEM
HOV	HIGH OCCUPANCY VEHICLE
PDA	POWER DISTRIBUTION ASSEMBLY
RF	RADIO FREQUENCY
RMS	RAMP METERING SYSTEM
RTS	REQUEST TO SEND
RX	RECEIVER
SCE	SOUTHERN CALIFORNIA EDISON
SM	SINGLEMODE
SMFO	SINGLEMODE FIBER OPTIC
TSC	TRAFFIC SIGNAL CONTROLLER CABINET
TX	TRANSMITTER
UPRR	UNION PACIFIC RAILROAD

AS-BUILT
Contract No. 07- 1257U4
Resident Engineer: MARTIN SANDOVAL
Completion Date: 07/30/2007

COMMUNICATION SYSTEM ROUTING
(MODIFY)
(LEGEND AND NOTES)

E-45

DATE	REVISED BY	DATE REVISED
4/02	CF	10/02

CALCULATED/DESIGNED BY: CANDACE FUNG
CHECKED BY: CONWAY CHU
PROJECT ENGINEER: CONWAY CHU

STATE OF CALIFORNIA - DEPARTMENT OF TRANSPORTATION
Caltrans
ITS DEVELOPMENT

FOR REDUCED PLANS ORIGINAL SCALE IS IN MILLIMETERS 0 20 40 60 80

DU 07383 EA 1257U1

DATE PLOTTED = 10-DEC-2008
TIME PLOTTED = 14:10

AS-BUILT

Contract No. 07- 1257U4
Resident Engineer: MARTIN SANDOVAL
Completion Date: 07/30/2007

CONSTRUCTION NOTES: (THIS SHEET ONLY)

40 REMOVE AND PROTECT EXISTING 6P22 CABLE FROM EXISTING COMMUNICATION PULL BOX TO EXISTING PULL BOX AT STA 375+22. ABANDON EXISTING CONDUIT.

41 COIL AND PROTECT THE REMOVED 6P22 CABLE IN EXISTING PULL BOX (AT STA 375+22).

42 INSTALL 53C. INSTALL EXISTING 6P22 CABLE THAT WAS COILED IN EXISTING PULL BOX (AT STA 375+22).

DIST	COUNTY	ROUTE	KILOMETER POST TOTAL PROJECT	SHEET No	TOTAL SHEETS
07	LA	57,60	R5.2/R7.3, R36.1/R40.0	548	853

Conway Chu 10/7/02
REGISTERED ELECTRICAL ENGINEER

12-2-02
PLANS APPROVAL DATE

REGISTERED PROFESSIONAL ENGINEER CONWAY CHU No. E15305 Exp. 3/31/05 ELECTRICAL STATE OF CALIFORNIA

The State of California or its officers or agents shall not be responsible for the accuracy or completeness of electronic copies of this plan sheet.

Caltrans now has a web site! To get to the web site, go to: http://www.dot.ca.gov

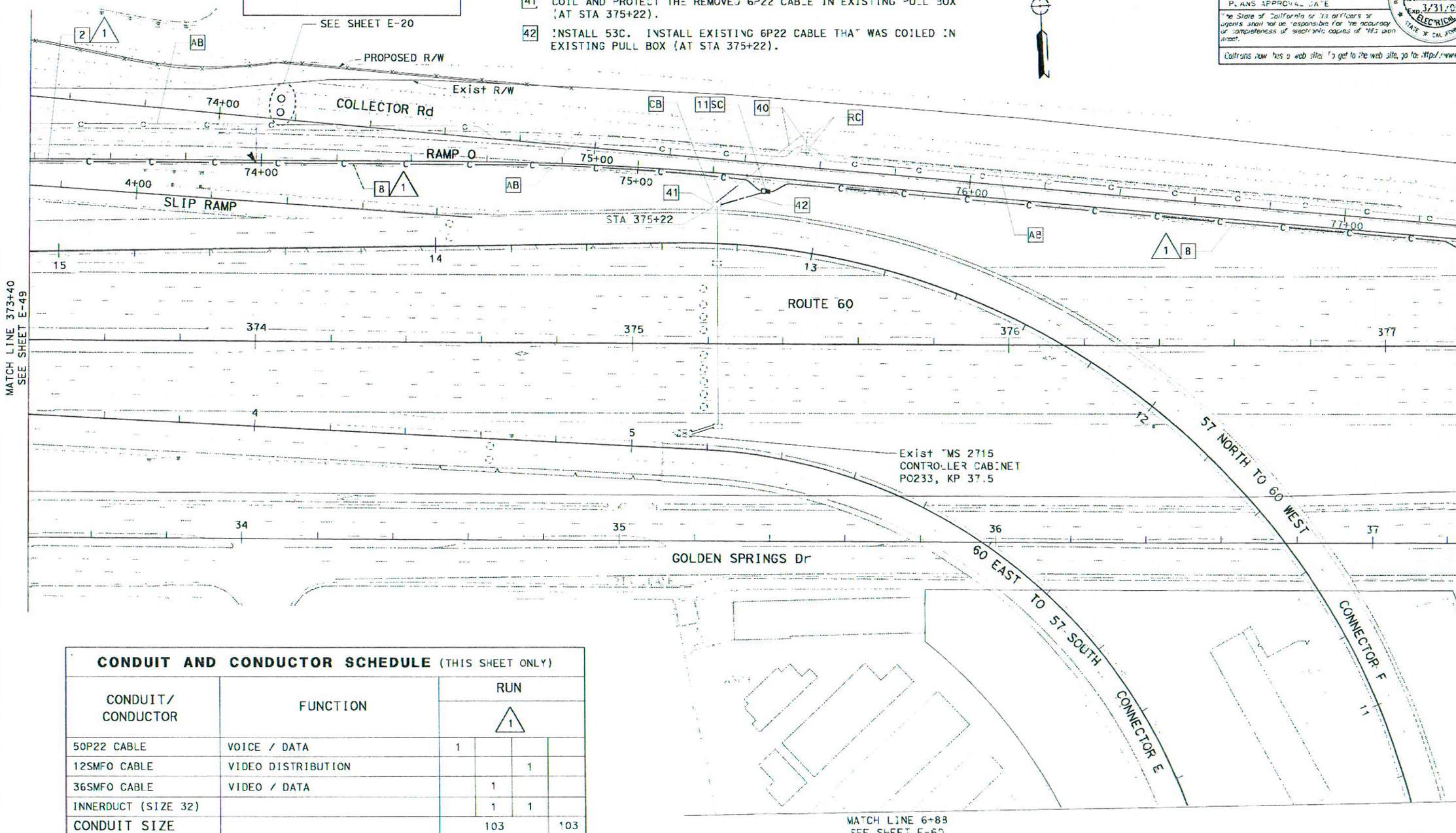

CONDUIT AND CONDUCTOR SCHEDULE (THIS SHEET ONLY)

CONDUIT/ CONDUCTOR	FUNCTION	RUN 1			
50P22 CABLE	VOICE / DATA	1			
12SMFO CABLE	VIDEO DISTRIBUTION			1	
36SMFO CABLE	VIDEO / DATA		1		
INNERDUCT (SIZE 32)			1	1	
CONDUIT SIZE			103		103

THIS PLAN ACCURATE FOR ELECTRICAL WORK ONLY.
FOR LEGEND AND GENERAL NOTES SEE SHEET E-45.
ALL DIMENSIONS ARE IN METER UNLESS OTHERWISE SHOWN.

COMMUNICATION SYSTEM ROUTING
(MODIFY)

SCALE 1:500

E-50

STATE OF CALIFORNIA - DEPARTMENT OF TRANSPORTATION
Caltrans ITS DEVELOPMENT

PROJECT ENGINEER: CONWAY CHU
CALCULATED/DESIGNED BY: CANDACE FUNG — DATE 4/02 — REVISED BY: CF
CHECKED BY: CONWAY CHU — 4/02 — DATE REVISED: 10/02

FOR REDUCED PLANS ORIGINAL SCALE IS IN MILLIMETERS 0 20 40 60 80

DIST	COUNTY	ROUTE	KILOMETER POST TOTAL PROJECT	SHEET No.	TOTAL SHEETS
07	LA	57,60	R5.2/R7.3, R36.1/R40.0	549	863

Conway Chu 10/7/02
REGISTERED ELECTRICAL ENGINEER

12-2-02
PLANS APPROVAL DATE

REGISTERED PROFESSIONAL ENGINEER CONWAY CHU No. E15305 Exp. 3/31/05 ELECTRICAL STATE OF CALIFORNIA

The State of California or its officers or agents shall not be responsible for the accuracy or completeness of electronic copies of this plan sheet.

Caltrans now has a web site! To get to the web site, go to: http://www.dot.ca.gov

Caltrans Metric

CONDUIT AND CONDUCTOR SCHEDULE (THIS SHEET ONLY)

CONDUIT/ CONDUCTOR	FUNCTION	RUN 1				RUN 2				RUN 3				
50P22 CABLE	VOICE / DATA	1				1								
12SMFO CABLE	VIDEO DISTRIBUTION			1				1						
36SMFO CABLE	VIDEO / DATA		1				1							
48SMFO CABLE	DATA DISTRIBUTION									1				
72SMFO CABLE	VIDEO / DATA										1			
36SMFO CABLE	VIDEO DISTRIBUTION											1		
INNERDUCT (SIZE 32)			1	1			1	1						
INNERDUCT (SIZE 25)										1	1	1	1	
CONDUIT SIZE		103			103	103(E)			103(E)	103				103

(E) EXISTING

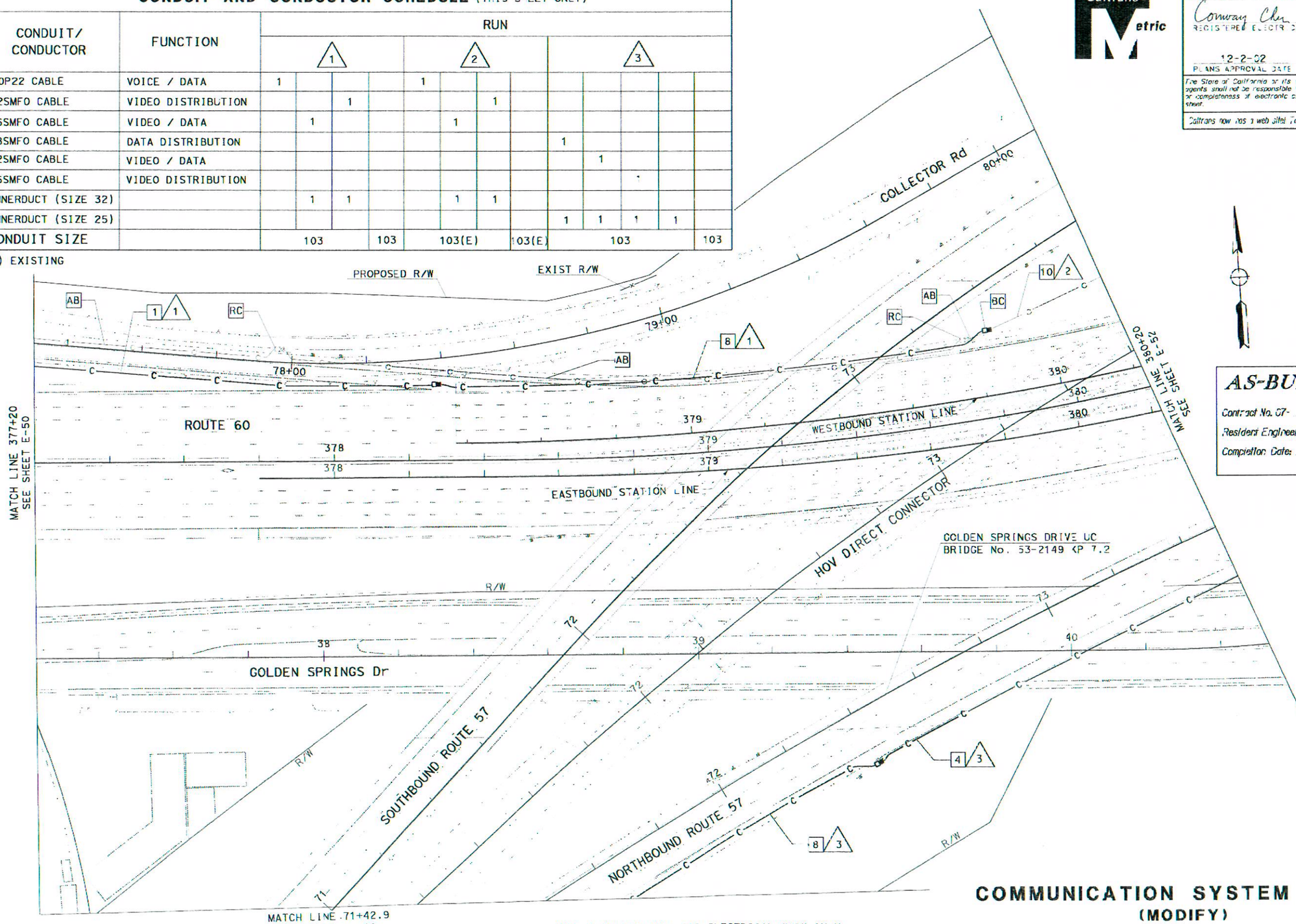

AS-BUILT

Contract No. 07- 1257U4
Resident Engineer: MARTIN SANDOVAL
Completion Date: 07/30/2007

THIS PLAN ACCURATE FOR ELECTRICAL WORK ONLY.
FOR LEGEND AND GENERAL NOTES SEE SHEET E-45.
ALL DIMENSIONS ARE IN METER UNLESS OTHERWISE SHOWN.

COMMUNICATION SYSTEM ROUTING (MODIFY)

SCALE 1:500

E-51

STATE OF CALIFORNIA - DEPARTMENT OF TRANSPORTATION
Caltrans
ITS DEVELOPMENT

PROJECT ENGINEER: CONWAY CHU
CALCULATED/ DESIGNED BY: CANDACE FUNG
CHECKED BY: CONWAY CHU
DATE 4/02 REVISED BY: CF
4/02 DATE REVISED 10/02

FOR REDUCED PLANS ORIGINAL SCALE IS IN MILLIMETERS 0 20 40 60 80
USERNAME => 52935

DIST	COUNTY	ROUTE	KILOMETER POST TOTAL PROJECT	SHEET NO	TOTAL SHEET
07	LA	57,60	R5.2/R7.3, R36.1/R40.0	550	863

Conway Chu 10/7/02
REGISTERED ELECTRICAL ENGINEER

12-2-02
PLANS APPROVAL DATE

REGISTERED PROFESSIONAL ENGINEER
CONWAY CHU
No. E15305
Exp. 3/31/05
ELECTRICAL
STATE OF CALIFORNIA

The State of California or its officers or agents shall not be responsible for the accuracy or completeness of electronic copies of this plan sheet.

Caltrans now has a web site! To get to the web site, go to: http://www.dot.ca.gov

CONDUIT AND CONDUCTOR SCHEDULE (THIS SHEET ONLY)

CONDUIT/ CONDUCTOR	FUNCTION	RUN 2				RUN 3					RUN 6				
50P22 CABLE	VOICE / DATA	1													
12SMFO CABLE	VIDEO DISTRIBUTION			1											
36SMFO CABLE	VIDEO / DATA		1												
48SMFO CABLE	DATA DISTRIBUTION					1					1				
72SMFO CABLE	VIDEO / DATA						1					1			
36SMFO CABLE	VIDEO DISTRIBUTION							1					1		
INNERDUCT (SIZE 32)			1	1											
INNERDUCT (SIZE 25)						1	1	1	1		1	1	1	1	
CONDUIT SIZE		103(E)			103(E)	103			103		103(E)				103(E)

(E) EXISTING

CONSTRUCTION NOTES: (THIS SHEET ONLY)

20 INSTALL CONDUITS 30 mm FROM STORM DRAIN.

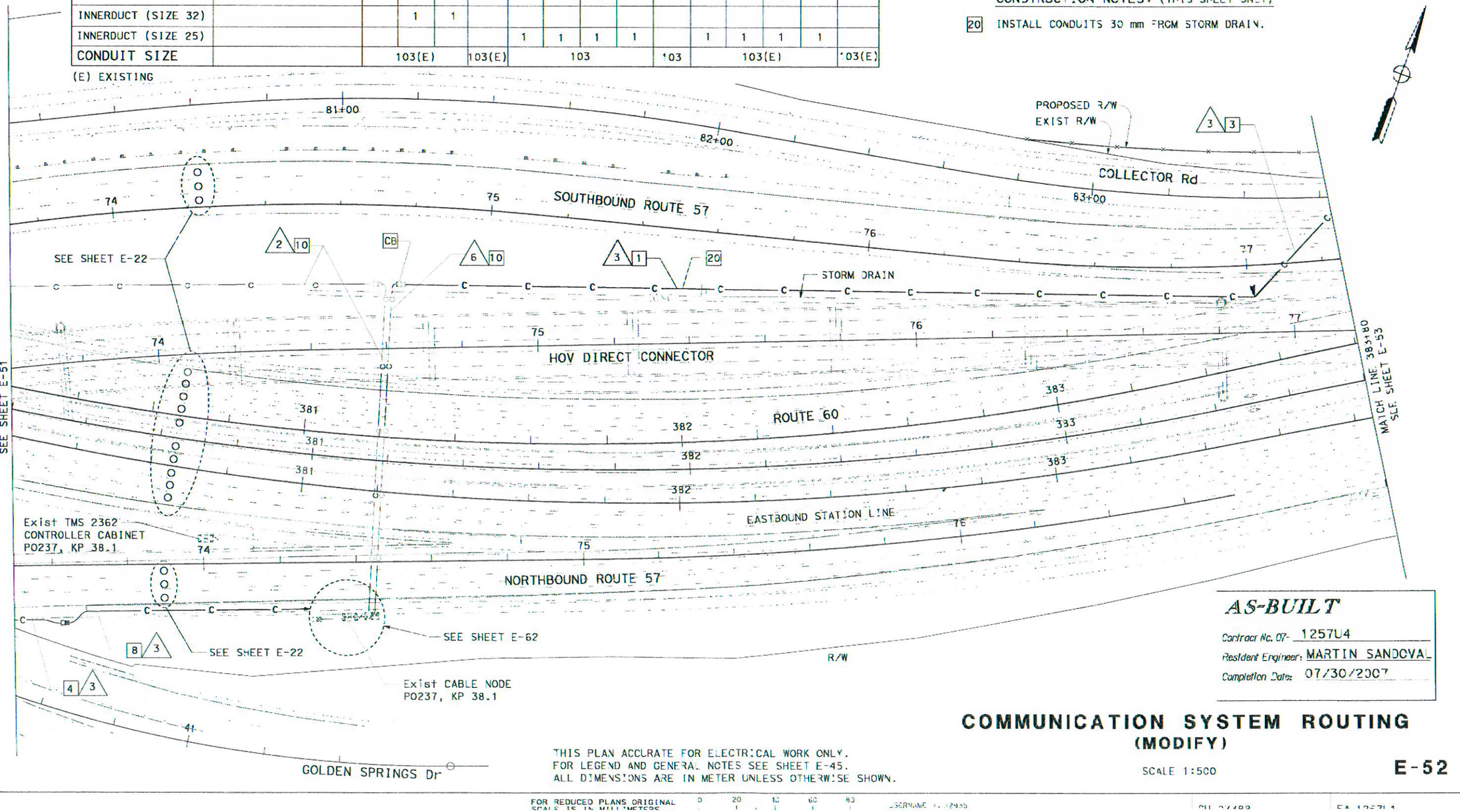

AS-BUILT
Contract No. 07- 125704
Resident Engineer: MARTIN SANDOVAL
Completion Date: 07/30/2007

THIS PLAN ACCURATE FOR ELECTRICAL WORK ONLY.
FOR LEGEND AND GENERAL NOTES SEE SHEET E-45.
ALL DIMENSIONS ARE IN METER UNLESS OTHERWISE SHOWN.

COMMUNICATION SYSTEM ROUTING (MODIFY)

SCALE 1:500

E-52

STATE OF CALIFORNIA - DEPARTMENT OF TRANSPORTATION
ITS DEVELOPMENT

DATE REVISED BY	DATE REVISED
4/02 CF	10/02
4/02 CANDACE FUNG	

CALCULATED/ DESIGNED BY	CHECKED BY
CONWAY CHU	

PROJECT ENGINEER
CONWAY CHU

FOR REDUCED PLANS ORIGINAL SCALE IS IN MILLIMETERS 0 20 40 60 80

USERNAME = 12935

CU 244B3

EA 125704

AS MISSION DATE PLOTTED = 10-DEC-2008
00 00-00 TIME PLOTTED = 15:10

Conway Chu 9/23/02
REGISTERED ELECTRICAL ENGINEER

3-10-03
PLANS APPROVAL DATE

REGISTERED PROFESSIONAL ENGINEER
CONWAY CHU
No. E15305
Exp. 3/31/05
ELECTRICAL
STATE OF CALIFORNIA

The State of California or its officers or agents shall not be responsible for the accuracy or completeness of electronic copies of this plan sheet.

Caltrans now has a web site! To get to the web site, go to: http://www.dot.ca.gov

Caltrans Metric

LEGEND

- SERVICE CONDUIT
- EXISTING SERVICE CONDUIT
- CONDUIT FOR LOOP DETECTOR, SIGNAL, AND ELECTRICAL CONDUCTORS
- TYPE E LOOP DETECTOR
- LOCATION OF PROPOSED CCTV CAMERA AND POLE
- TYPE 334-TV CABINET FOR CCTV CAMERA, HAR, DATA NODE, AND CABLE NODE
- SPLICE VAULT
- COMMUNICATION PULL BOX, SEE SHEET E-69
- EXISTING CCTV CAMERA AND POLE
- EXISTING CCTV, OR CABLE NODE
- EXISTING SPLICE VAULT
- AXLE SENSOR
- HAR FLASHING BEACON/SIGN ASSEMBLY SEE SHEETS E-81 AND E-82
- DELIMITER FOR PROJECT NOTES

EXAMPLE: 1 1 C 1 2

GENERAL NOTES

1. THE LOCATION OF EXISTING CONTROLLER CABINETS, EXISTING SERVICE ENCLOSURES, AND POWER POLES ARE APPROXIMATE. THE LOCATION OF PROPOSED PULL BOXES AND SPLICE VAULTS ARE APPROXIMATE AND MAY BE CHANGED TO SUIT FIELD CONDITIONS AS DIRECTED BY THE ENGINEER.
2. BEFORE REMOVING OR MODIFYING ANY EXISTING ELECTRICAL FACILITIES, THE CONTRACTOR SHALL PROVIDE 72 HOUR ADVANCE WRITTEN NOTICE TO THE ENGINEERS AND ALL AGENCIES CONCERNED.
3. UNLESS OTHERWISE NOTED, ALL COMMUNICATION CONDUIT BENDS SHALL BE 1.2 m RADIUS FACTORY BENDS.
4. COMMUNICATION CONDUIT SHALL BE CENTERED IN THE PAVED SHOULDER OR AS SHOWN ON THESE PLANS OR AS DIRECTED BY THE ENGINEER.
5. TRENCHING IN PAVEMENT ALLOWED ONLY WHERE SHOWN ON PLANS.
6. FOR NOTES PERTAINING TO UTILITIES SEE SHEET J-1.
7. ALL PULL BOXES AND SPLICE VAULTS SHALL BE INSTALLED IN UNPAVED AREA UNLESS NOTED OTHERWISE.
8. WHEN EXISTING DETECTOR LOOPS AND CONDUITS ARE SHOWN IN THE VICINITY OF PROPOSED CONDUIT TRENCHES, THE CONTRACTOR SHALL AVOID DAMAGING THE EXISTING CONDUIT. TRENCHING WITH HAND TOOLS MAY BE REQUIRED.
9. INSTALL PULL ROPE AND PLUG ENDS EACH UNUSED INNERDUCTS.

TABLE 1 - CCTV WIRING

CONDUCTOR TYPE	FUNCTION	QUANTITY
RG-6A/U COAX CABLE	CAMERA VIDEO INTERFACE CABLE	1
RS232 (5#22) CABLE	CAMERA CONTROL CABLE	1
3#18	POWER CABLE	1

CONSTRUCTION NOTES: (FOR E-1 TO E-31)

1. TRENCH AND INSTALL CONDUIT IN UNPAVED AREA.
2. TRENCH AND INSTALL CONDUIT IN ASPHALT.
3. JACK TYPE 1 CONDUIT BENEATH ROADWAY.
4. ATTACH CONDUIT TO STRUCTURE. SEE BRIDGE STRUCTURE PLANS FOR BRIDGE ATTACHMENT TYPE AND DETAIL.
5. TERMINATE 12SMFO CABLE IN EXISTING CONTROLLER CABINET. USE EXISTING CONDUIT FROM ADJACENT PULL BOX INTO EXISTING CABINET. SEE SHEET E-75 FOR DETAILS.
6. COIL 15 m (UNLESS OTHERWISE INDICATED ON PLAN) OF 12SMFO CABLE FOR FUTURE CONNECTION TO TRAFFIC SIGNAL CONTROLLER.
7. INSTALL FIBER OPTIC DATA MODEM, FIBER DISTRIBUTION UNIT, AND INTERFACE CABLE.
8. PROTECT EXISTING LOOP DETECTOR STUB-OUT AND SAW CUTS.
9. INSTALL SPARE 103C WITH PULL ROPE IN THE SAME TRENCH WITH OTHER COMMUNICATION CONDUIT.
10. JACK SPARE 103C ADJACENT TO COMMUNICATION CONDUIT.
11. SHOWN FOR REFERENCE ONLY. FOR INSTALLATION REFER TO LOCATION PLAN.
12. INSTALL SPARE 103C, WITH PULL ROPE.
13. INSTALL SPLICE VAULT WITH FIBER OPTIC SPLICE CLOSURE(S).
14. TRENCH AND INSTALL CONDUIT(S) IN CONCRETE.

EQUIPMENT IDENTIFICATION

OR123
- POST MILE ACCURATE TO 1/10 MILE (WITHOUT DECIMAL)
- FREEWAY ROUTE

ABBREVIATIONS

IC	INTERCONNECT
1P	1-POLE
72SMFO	FIBER OPTIC CABLE, 72 SINGLEMODE FIBERS
48SMFO	FIBER OPTIC CABLE, 48 SINGLEMODE FIBERS
36SMFO	FIBER OPTIC CABLE, 36 SINGLEMODE FIBERS
12SMFO	FIBER OPTIC CABLE, 12 SINGLEMODE FIBERS
AVC	AUTOMATIC VEHICLE CLASSIFICATION
CCR	CAMERA CONTROL RECEIVER
F/O	FIBER OPTIC
GRS	GALVANIZED RIGID STEEL
OHS	OVERHEAD SIGN
SCE	SOUTHERN CALIFORNIA EDISON
STC	SCREENED TRANSMISSION CABLE
RMS	RAMP METERING SYSTEM
IFL	INTERFACILITY LINK
RF	RADIO FREQUENCY
FDU	FIBER DISTRIBUTION UNIT
FODM	FIBER OPTIC DATA MODEM
LADWP	LOS ANGELES DEPARTMENT OF WATER AND POWER
UPRR	UNION PACIFIC RAIL ROAD
COAX	COAXIAL

AS-BUILT
Contract No. 07- 120974
Resident Engineer: WARREN YUE
Completion Date: 1/24/06

LEGEND AND NOTES
(SHEETS E-2 TO E-106)

E-1

STATE OF CALIFORNIA - DEPARTMENT OF TRANSPORTATION
Caltrans ITS DEVELOPMENT

PROJECT ENGINEER	CALCULATED/ DESIGNED BY	CHECKED BY	DATE	REVISED BY	DATE REVISED
CONWAY CHU	CONWAY CHU		9/02	CC	9/02

CONDUIT AND CONDUCTOR SCHEDULE

CONDUCTOR TYPE	FUNCTION	RUN 2				28	70	71
12SMFO CABLE	DATA / VOICE						1	2
48SMFO CABLE	DATA DISTRIBUTION	1						
4#18 CABLE	TELEPHONE CABLE					1(E)		
36SMFO CABLE	VIDEO DISTRIBUTION			1				
72SMFO CABLE	VIDEO / DATA		1					
INNERDUCT (SIZE 25)		1	1	1	1			
CONDUIT SIZE		103				78	53	53

(E) EXISTING

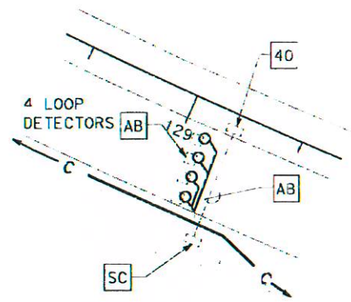

DETAIL "A"
SCALE 1:500

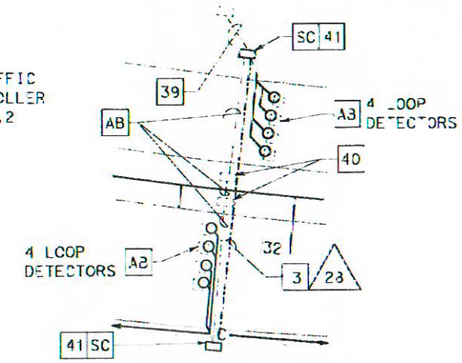

DETAIL "B"
SCALE 1:500

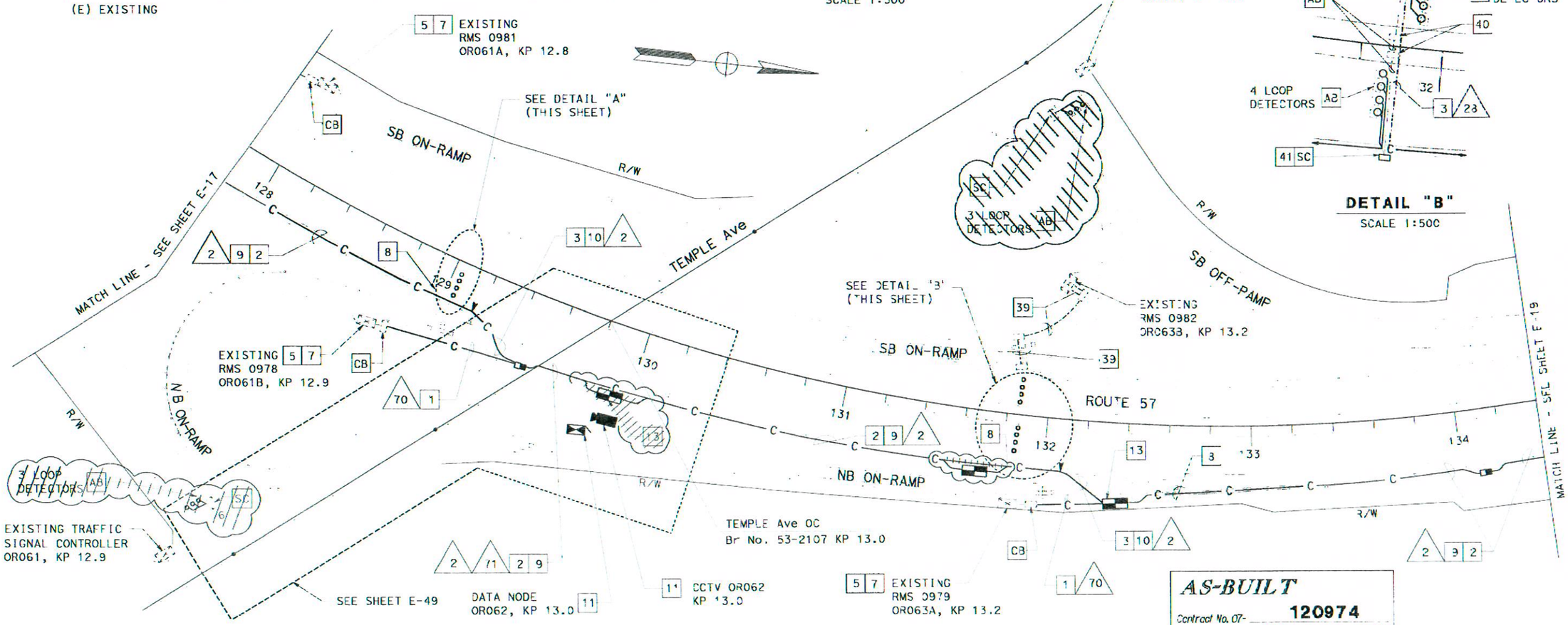

CONSTRUCTION NOTES (THIS SHEET ONLY)

39 REINSTALL 4#18 TELEPHONE CABLE TO RMS 0982.

40 RC PULL BOX COVER. FILL OPENING WITH PCC AND AC TO MATCH EXISTING (0.03 m Min AC).

41 RC EXISTING PULL BOX. INSTALL NEW PULL BOX.

THIS PLAN ACCURATE FOR ELECTRICAL WORK ONLY.
FOR LEGEND AND GENERAL NOTES SEE SHEET E-1.
ALL DIMENSIONS ARE IN METER UNLESS OTHERWISE SHOWN.

DIST	COUNTY	ROUTE	KILOMETER POST / TOTAL PROJECT	SHEET NO	TOTAL SHEETS
07	LA	10,57,60, 210,605	Var	83	239

Conway Chu 9/23/02
REGISTERED ELECTRICAL ENGINEER

3-10-03
PLANS APPROVAL DATE

CONWAY CHU No. E15305 Exp. 3/31/05 ELECTRICAL — REGISTERED PROFESSIONAL ENGINEER — STATE OF CALIFORNIA

The State of California or its officers or agents shall not be responsible for the accuracy or completeness of electronic copies of this plan sheet.

Caltrans now has a web site! To get to the web site, go to: http://www.dot.ca.gov

AS-BUILT
Contract No. 07- 120974
Resident Engineer: WARREN YUE
Completion Date: 1/24/06

LOOP DETECTORS
COMMUNICATION SYSTEM ROUTING

SCALE 1:1200

E-18

STATE OF CALIFORNIA - DEPARTMENT OF TRANSPORTATION
Caltrans
ITS DEVELOPMENT
PROJECT ENGINEER: CONWAY CHU
CALCULATED/DESIGNED BY
CHECKED BY
CONWAY CHU
DATE 9/02
REVISED BY: CC
DATE REVISED 9/02

FOR REDUCED PLANS ORIGINAL SCALE IS IN MILLIMETERS

CU 07388 EA 120971

DIST	COUNTY	ROUTE	KILOMETER POST / TOTAL PROJECT	SHEET NO	TOTAL SHEETS
07	LA	10,57,60, 210,605	var	86	239

Conway Chu 9/23/02
REGISTERED ELECTRICAL ENGINEER

3-10-03
PLANS APPROVAL DATE

CONWAY CHU No. E 13365 EXP. 3/31/05 ELECTRICAL REGISTERED PROFESSIONAL ENGINEER STATE OF CALIFORNIA

The State of California or its officers or agents shall not be responsible for the accuracy or completeness of electronic copies of this plan sheet.

Caltrans now has a web site. To join the web site, go to: http://www.dot.ca.gov

AS-BUILT
Contract No. 07- **120974**
Resident Engineer: **WARREN YUE**
Completion Date: **1/24/06**

DATE	REVISED BY	DATE REVISED
9/02	CC	9/02

CALCULATED/DESIGNED BY: CANDACE FUNG
CHECKED BY: CONWAY CHU

PROJECT ENGINEER: CONWAY CHU

STATE OF CALIFORNIA - DEPARTMENT OF TRANSPORTATION
Caltrans
ITS DEVELOPMENT

CONSTRUCTION NOTES (THIS SHEET ONLY)

20 ADD 12SMFO CABLE IN EXISTING CONDUIT.

34 RC PULL BOX COVER. FILL OPENING WITH PCC AND AC TO MATCH EXISTING (0.03 m Min AC).

40 RC dlc's. INSTALL DLC'S IN EXISTING CONDUIT AS SHOWN ON PLAN.

41 RC EXISTING PULL BOX. INSTALL NEW PULL BOX.

42 INSTALL TWO 72-FIBER FIBER DISTRIBUTION UNIT IN EXISTING CABLE NODE.

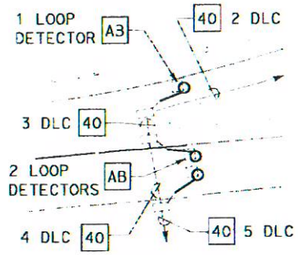

DETAIL "A"
SCALE 1:500

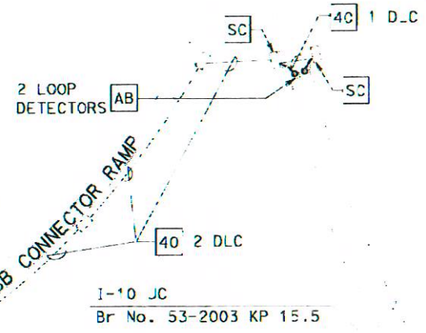

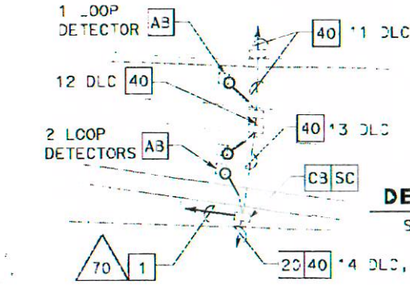

DETAIL "C"
SCALE 1:500

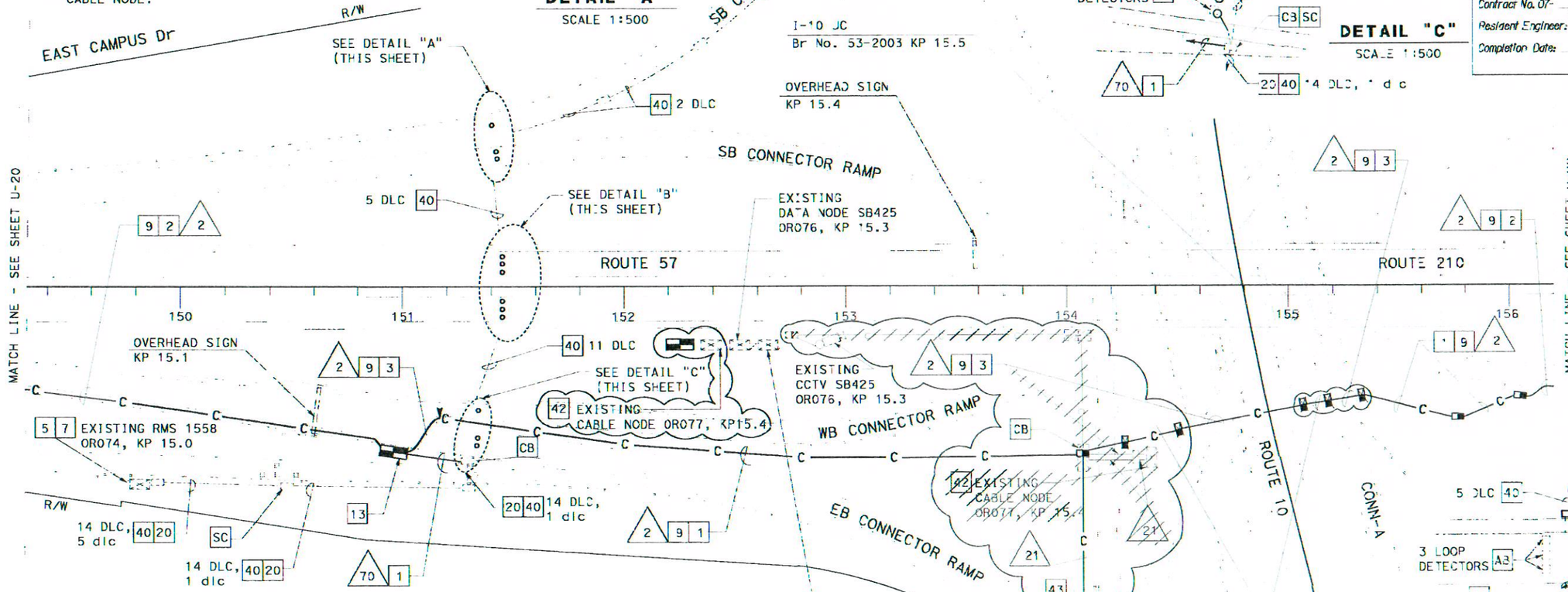

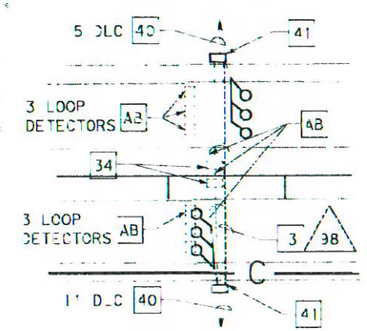

DETAIL "B"
SCALE 1:500

CONDUIT AND CONDUCTOR SCHEDULE

CONDUCTOR TYPE	FUNCTION	RUN 2				21	70	98
12SMFO CABLE	DATA / VOICE						1	
48SMFO CABLE	DATA DISTRIBUTION	1						
36SMFO CABLE	VIDEO DISTRIBUTION			1				
72SMFO CABLE	VIDEO / DATA		1			2		
DLC	DETECTOR LEAD-IN CABLE							8
INNERDUCT (SIZE 25)		1	1	1	1	2		
CONDUIT SIZE		103				78 (E)	53	78

(E) EXISTING

43 EXISTING COMMUNICATION PULL BOX. ADD (2) 72SMFO AND (2) SIZE 25 INNERDUCT INSIDE EXISTING CONDUIT TO EXISTING CABLE NODE OR077.

THIS PLAN ACCURATE FOR ELECTRICAL WORK ONLY
FOR LEGEND AND GENERAL NOTES SEE SHEET E-1.
ALL DIMENSIONS ARE IN METER UNLESS OTHERWISE SHOWN.

LOOP DETECTORS
MODIFY CABLE NODE (LOCATION OR077)
COMMUNICATION SYSTEM ROUTING

SCALE 1:1000

E-21

FOR REDUCED PLANS ORIGINAL SCALE IS IN MILLIMETERS

CU 07383 EA 120971

DIST	COUNTY	ROUTE	KILOMETER POST TOTAL PROJECT	SHEET NO.	TOTAL SHEETS
07	LA	10,57,60, 210,605	var	33	235

Caltrans Metric

Conway Chu 9/23/02
REGISTERED ELECTRICAL ENGINEER

3-10-33
PLANS APPROVAL DATE

CONWAY CHU No. E15305 EXP. 3/31/05 ELECTRICAL STATE OF CALIFORNIA REGISTERED PROFESSIONAL ENGINEER

The State of California or its officers or agents shall not be responsible for the accuracy or completeness of electronic copies of this plan sheet.

Caltrans now has a web site! To get to the web site, go to: http://www.dot.ca.gov

CONDUIT AND CONDUCTOR SCHEDULE

CONDUCTOR TYPE	FUNCTION	RUN 2				RUN 71
48SMFO CABLE	DATA DISTRIBUTION	1				
72SMFO CABLE	VIDEO / DATA		1			
36SMFO CABLE	VIDEO DISTRIBUTION			1		
12SMFO CABLE	DATA / VOICE					2
INNERDUCT (SIZE 25)		1	1	1	1	
CONDUIT SIZE		103				53

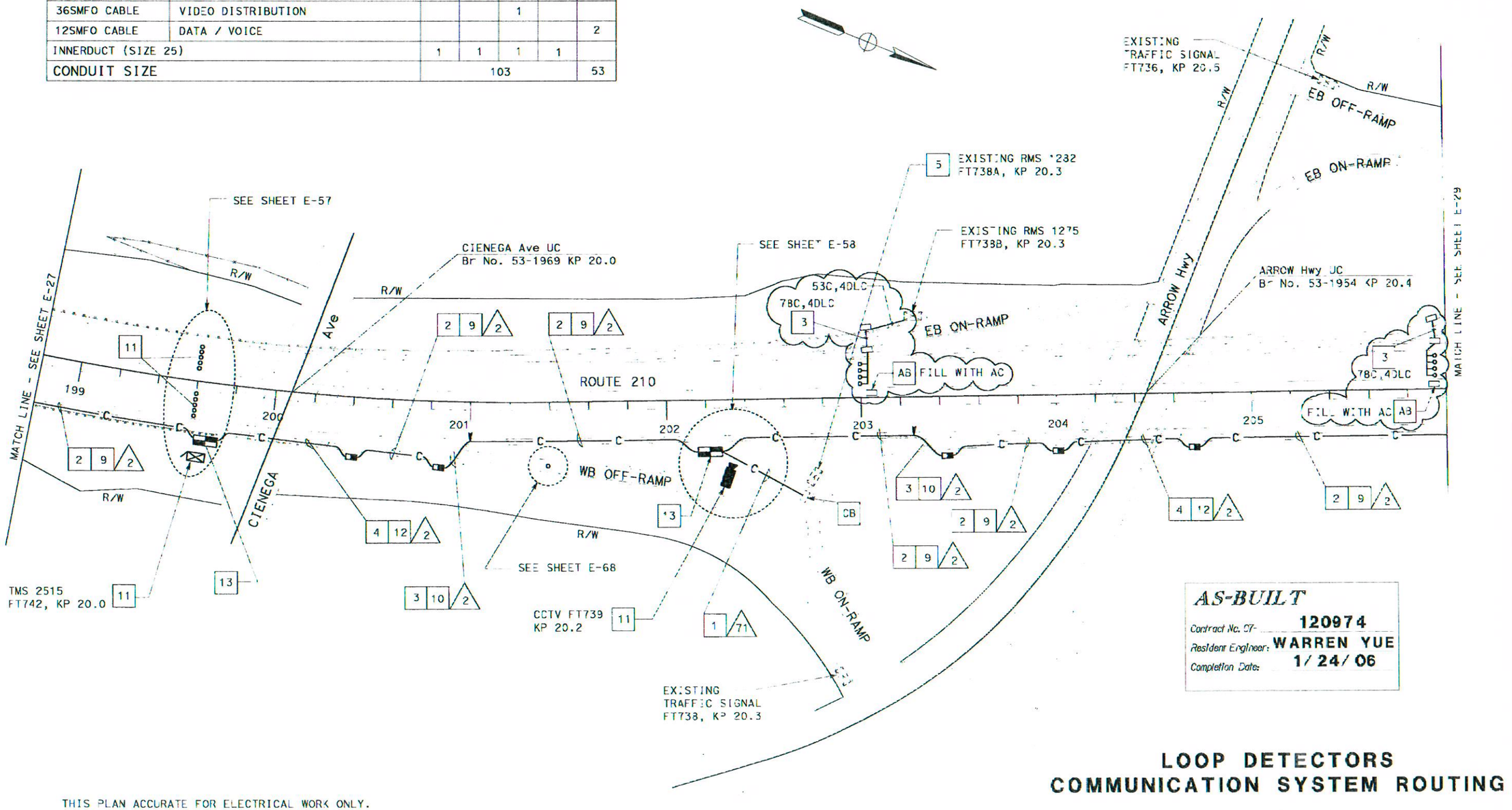

AS-BUILT
Contract No. 07- 120974
Resident Engineer: WARREN YUE
Completion Date: 1/24/06

LOOP DETECTORS
COMMUNICATION SYSTEM ROUTING

SCALE 1:1000

E-28

THIS PLAN ACCURATE FOR ELECTRICAL WORK ONLY.
FOR LEGEND AND GENERAL NOTES SEE SHEET E-1.
ALL DIMENSIONS ARE IN METER UNLESS OTHERWISE SHOWN.

STATE OF CALIFORNIA - DEPARTMENT OF TRANSPORTATION
Caltrans ITS DEVELOPMENT

PROJECT ENGINEER CONWAY CHU

CALCULATED/ DESIGNED BY	CONWAY CHU	DATE 9/02	REVISED BY CC	DATE REVISED 9/02
CHECKED BY				

FOR REDUCED PLANS ORIGINAL SCALE IS IN MILLIMETERS

USERNAME

DU 07388

EA 120974