Dist	COUNTY	ROUTE	POST MILES TOTAL PROJECT	SHEET No.	TOTAL SHEETS
07	LA	91	R11.3/R20.7	101	192

REGISTERED CIVIL ENGINEER 8/3/15 DATE

8-10-15
PLANS APPROVAL DATE

REGISTERED PROFESSIONAL ENGINEER SULIASTI SUTANTO No. C77282 Exp. 6/30/17 CIVIL STATE OF CALIFORNIA

THE STATE OF CALIFORNIA OR ITS OFFICERS OR AGENTS SHALL NOT BE RESPONSIBLE FOR THE ACCURACY OR COMPLETENESS OF SCANNED COPIES OF THIS PLAN SHEET.

CONTRACTOR FURNISHED SIGN PANELS

SHEET No.	SIGN No.	LOCATION		SIGN CODE	PANEL SIZE (L X D)	SINGLE FACED	SIGN FACING MATERIAL				GRAFFITI FILM	FURNISH FORMED PANEL SIGN (OVERHEAD) FOR RETROREFLECTIVE SHEETING (TYPE XI)	RETROREFLECTIVE SHEETING (TYPE XI)	REMOVE SIGN PANEL	INSTALL SIGN PANEL ON EXISTING FRAME
							BACKGROUND		LEGEND						
		STATION	DIRECTION		INCH x INCH		SHEETING COLOR	RETRO-REFLECTIVE ASTM TYPE	SHEETING COLOR	RETRO-REFLECTIVE ASTM TYPE	PREMIUM	SQFT	SQFT	EA	SQFT
S-1	1	17+35 "POP49"	FWBT	G85-5 (CA) Mod	240 X 70	●	GREEN	XI	WHITE	XI	●	116.7	116.7	1	116.7
S-2	2A	995+50 "91A4"	FWBT	G83-5 (CA) Mod	192 X 100	●	GREEN	XI	WHITE	XI	●	133.3	133.3	1	133.3
	2B	995+50 "91A4"	FWBT	G85-5 (CA) Mod	168 X 100	●	GREEN	XI	WHITE	XI	●	116.7	116.7	1	116.7
S-3	3	1050+65 "91A4"	FWBT	G24-5 (CA) Mod	240 X 100	●	GREEN	XI	WHITE	XI	●	166.7	166.7	1	166.7
TOTAL												533.4	533.4	4	533.4

LEGENDS:

L : LENGTH OF SIGN
D : DEPTH OF SIGN
● : APPLICABLE TREATMENT

SIGN QUANTITIES

SQ-1

STATE OF CALIFORNIA - DEPARTMENT OF TRANSPORTATION
Caltrans TRAFFIC DESIGN

FUNCTIONAL SUPERVISOR: MOHAMMED CHOWDHURY
CALCULATED-DESIGNED BY: RICHARD KHAW
CHECKED BY: SULIASTI SUTANTO
REVISED BY
DATE REVISED

LAST REVISION 00-00-00
DATE PLOTTED => 21-SEP-2015
TIME PLOTTED => 10:29

Dist	COUNTY	ROUTE	POST MILES TOTAL PROJECT	SHEET No.	TOTAL SHEETS
07	LA	91	R11.3/R20.7	102	192

Lewen Kuo 6-18-15
REGISTERED CIVIL ENGINEER DATE

8-10-15
PLANS APPROVAL DATE

REGISTERED PROFESSIONAL ENGINEER LEWEN KUO No. C52464 Exp. 12/31/16 CIVIL STATE OF CALIFORNIA

THE STATE OF CALIFORNIA OR ITS OFFICERS OR AGENTS SHALL NOT BE RESPONSIBLE FOR THE ACCURACY OR COMPLETENESS OF SCANNED COPIES OF THIS PLAN SHEET.

CURB RAMP REMOVAL QUANTITY

LOCATION		RAMP DIRECTION	(N) CURB RAMP AREA (SQFT)	REMOVE CONCRETE (CURB RAMP) (CY)
1 CHERRY Ave PM R13.09 EB	1A	EB OFF	122.8	1.9
	1B	EB OFF	136.5	2.1
	1C	EB ON	143.5	2.2
	1D	EB ON	233.4	3.6
2 CHERRY Ave PM R13.09 WB	2A	WB ON	90.9	1.4
	2B	WB ON	167.3	2.6
	2C	WB OFF	98.4	1.5
	2D	WB OFF	88.5	1.4
3 PARAMOUNT Blvd PM R13.59 EB	3A	EB OFF	193.8	3.0
	3B	EB OFF	140.2	2.2
	3C	EB ON	121.1	1.9
	3D	EB ON	159.4	2.5
4 PARAMOUNT Blvd PM R13.59 WB	4A	WB ON	113.9	1.8
	4B	WB ON	184.2	2.9
	4C	WB OFF	98.3	1.5
	4D	WB OFF	138.9	2.2
5 DOWNEY Ave PM R14.10 EB	5A	EB OFF	101.2	1.6
	5B	EB OFF	67.2	1.0
	5C	EB ON	213.1	3.3
	5D	EB ON	164.2	2.5
6 DOWNEY Ave PM R14.10 WB	6A	WB ON	200.6	3.1
	6B	WB ON	119.2	1.8
	6C	WB OFF	164.1	2.5
	6D	WB OFF	122.2	1.9
7 LAKEWOOD Blvd PM R14.61 EB	7A	EB OFF	140.6	2.2
	7B	EB OFF	138.1	2.1
	7C	EB ON	223.1	3.5
	7D	EB ON	94.2	1.5
8 LAKEWOOD Blvd PM R14.61 WB	8A	WB ON	156.8	2.4
	8B	WB ON	175.7	2.7
	8C	WB OFF	113.7	1.8
	8D	WB OFF	88.2	1.4
SUB TOTAL SHEET Q-1			4,515.3	70.0

(N) - NOT A SEPARATE PAY ITEM. FOR INFORMATION ONLY

CURB RAMP QUANTITY

LOCATION		RAMP DIRECTION	CASE	(N) CURB RAMP AREA (SQFT)	MINOR Conc (RETAINING CURB, SIDEWALK, CURB, CURB RAMP AND GUTTER) (CY)	DETECTABLE WARNING SURFACE (SQFT)	ROADWAY EXCAVATION (TYPE Z-2) (CY)	PRE/POST Const SURVEYS EA	RELOCATE ROADSIDE SIGN EA
1 CHERRY Ave PM R13.09 EB	1A	EB OFF	G RSP A88A	122.8	1.9	19	-	1	
	1B	EB OFF	G RSP A88A	136.5	2.1	20	-	1	
	1C	EB ON	G RSP A88A	143.5	2.2	24	-	1	
	1D	EB ON	C Mod	233.4	3.6	18	-	1	
2 CHERRY Ave PM R13.09 WB	2A	WB ON	G RSP A88A	90.9	1.4	15	-	1	
	2B	WB ON	D Mod	167.3	2.6	18	-	1	
	2C	WB OFF	F Mod (REVERSED)	120.2	1.9	27	0.4	1	
	2D	WB OFF	G RSP A88A	114.8	1.8	15	0.4	1	1
3 PARAMOUNT Blvd PM R13.59 EB	3A	EB OFF	G Mod (REVERSED)	268.6	4.2	27	1.2	1	
	3B	EB OFF	G RSP A88A	140.2	2.2	18	-	1	
	3C	EB ON	G RSP A88A	121.1	1.9	18	-	1	
	3D	EB ON	F Mod	349.7	5.4	24	2.9	1	1
4 PARAMOUNT Blvd PM R13.59 WB	4A	WB ON	G RSP A88A	113.9	1.8	16	-	1	
	4B	WB ON	F Mod	232.0	3.6	26	0.7	1	
	4C	WB OFF	F Mod (REVERSED)	253.1	3.9	26	2.4	1	
	4D	WB OFF	G RSP A88A	138.9	2.2	20	-	1	
5 DOWNEY Ave PM R14.10 EB	5A	EB OFF	F Mod (REVERSED)	115.2	1.8	27	0.2	1	
	5B	EB OFF	F RSP A88A	97.4	1.5	15	0.5	1	
	5C	EB ON	G RSP A88A	317.6	4.9	19	1.6	1	1
	5D	EB ON	F Mod	193.7	3.0	26	0.5	1	
6 DOWNEY Ave PM R14.10 WB	6A	WB ON	A Mod (REVERSED)	213.1	3.3	20	0.2	1	
	6B	WB ON	F Mod	185.1	2.9	19	1.1	1	
	6C	WB OFF	F Mod (REVERSED)	207.9	3.2	25	0.7	1	
	6D	WB OFF	A Mod	160.4	2.5	19	0.6	1	
7 LAKEWOOD Blvd PM R14.61 EB	7A	EB OFF	F Mod (REVERSED)	140.6	2.2	25	-	1	
	7B	EB OFF	C Mod	175.5	2.7	19	0.6	1	1
	7C	EB ON	F Mod (REVERSED)	228.2	3.6	24	0.1	1	
	7D	EB ON	C Mod	163.6	2.5	18	1.0	1	
8 LAKEWOOD Blvd PM R14.61 WB	8A	WB ON	G RSP A88A	162.1	2.5	18	0.1	1	
	8B	WB ON	C Mod	223.1	3.5	25	0.8	1	
	8C	WB OFF	F RSP A88A	113.7	1.8	21	-	1	
	8D	WB OFF	G RSP A88A	113.0	1.8	17	0.4	1	
SUB TOTAL SHEET Q-1				6,368	84.3	668	16.4	32	4

SUMMARY OF QUANTITIES
CURB RAMP
Q-1

STATE OF CALIFORNIA - DEPARTMENT OF TRANSPORTATION
Caltrans DESIGN
FUNCTIONAL SUPERVISOR M. OJI KALU
CALCULATED-DESIGNED BY VINCENT VALIDO
CHECKED BY LEWEN KUO
REVISED BY
DATE REVISED

LAST REVISION 6-5-15
DATE PLOTTED => 21-SEP-2015
TIME PLOTTED => 10:29

Dist	COUNTY	ROUTE	POST MILES TOTAL PROJECT	SHEET No.	TOTAL SHEETS
07	LA	91	R11.3/R20.7	103	192

REGISTERED CIVIL ENGINEER 6-18-15 DATE

8-10-15
PLANS APPROVAL DATE

REGISTERED PROFESSIONAL ENGINEER LEWEN KUO No. C52464 Exp. 12/31/16 CIVIL STATE OF CALIFORNIA

THE STATE OF CALIFORNIA OR ITS OFFICERS OR AGENTS SHALL NOT BE RESPONSIBLE FOR THE ACCURACY OR COMPLETENESS OF SCANNED COPIES OF THIS PLAN SHEET.

REMOVAL CURB RAMP QUANTITY

LOCATION		RAMP DIRECTION	(N) CURB RAMP AREA (SQFT)	REMOVE CONCRETE (CURB RAMP) (CY)
8 LAKEWOOD Blvd PM R14.61 WB	8E	WB ON	82.6	1.3
	8F	WB ON	135.3	2.1
9 CLARK Ave PM R15.10 EB	9	EB ON	75.6	1.1
10 CLARK Ave PM R15.10 WB	10A	WB OFF	76.8	1.2
	10B	WB OFF	84.6	1.3
11 BELLFLOWER Blvd PM R15.61 EB	11A	EB OFF	175.0	2.7
	11B	EB OFF	184.7	2.9
	11C	EB ON	132.5	2.0
12 BELLFLOWER Blvd PM R15.61 WB	12A	WB ON	131.8	2.0
	12B	WB OFF	308.5	4.8
	12C	WB OFF	155.6	2.4
13 STUDEBAKER Rd PM R17.08 EB	13A	EB ON	183.3	2.8
	13B	EB ON	100.1	1.6
14 STUDEBAKER Rd PM R17.08 WB	14A	WB OFF	122.4	1.9
	14B	WB OFF	164.1	2.5
15 PIONEER Blvd PM R18.09 WB	15A	WB ON	238.7	3.7
	15B	WB ON	108.3	1.7
	15C	WB OFF	203.8	3.2
	15D	WB OFF	56.4	0.9
	15E	WB ON	263.8	4.1
	15F	WB ON	95.4	1.5
16 PIONEER Blvd PM R18.09 EB	16A	EB OFF	117.5	1.8
	16B	EB OFF	151.0	2.3
	16C	EB ON	237.3	3.7
	16D	EB ON	83.7	1.3
	16E	EB ON	223.2	3.5
	16F	EB ON	98.7	1.5
17 NORWALK Blvd PM R18.67 WB	17A	WB ON	281.3	4.4
	17B	WB ON	141.2	2.2
	17C	WB OFF	166.0	2.6
	17D	WB OFF	91.1	1.4
SUB TOTAL SHEET Q-2			4,670.3	72.4

(N) - NOT A SEPARATE PAY ITEM. FOR INFORMATION ONLY

CURB RAMP QUANTITY

LOCATION		RAMP DIRECTION	CASE	(N) CURB RAMP AREA (SQFT)	MINOR Conc (RETAINING CURB, SIDEWALK,CURB, CURB RAMP AND GUTTER) (CY)	DETECTABLE WARNING SURFACE (SQFT)	ROADWAY EXCAVATION (TYPE Z-2) (CY)	PRE/POST Const SURVEYS EA	RELOCATE ROADSIDE SIGN EA
8 LAKEWOOD Blvd PM R14.61 WB	8E	WB ON	E RSP A88A	116.7	1.8	17	0.5	1	
	8F	WB ON	G Mod	153.4	2.4	20	0.3	1	
9 CLARK Ave PM R15.10 EB	9	EB ON		83.9	1.3	13	0.2	1	1
10 CLARK Ave PM R15.10 WB	10A	WB OFF	F RSP A88A	90.6	1.4	16	0.2	1	
	10B	WB OFF	F Mod (REVERSED)	156.9	2.4	27	1.1	1	
11 BELLFLOWER Blvd PM R15.61 EB	11A	EB OFF	F Mod (REVERSED)	175.0	2.7	30	-	1	
	11B	EB OFF	G RSP A88A	192.7	3.0	16	0.1	1	
	11C	EB ON	G RSP A88A	142.1	2.2	15	0.2	1	
12 BELLFLOWER Blvd PM R15.61 WB	12A	WB ON	F RSP A88A	134.5	2.1	14	0.1	1	
	12B	WB OFF	D Mod	308.5	4.8	21	-	1	
	12C	WB OFF	G RSP A88A	173.4	2.7	18	0.3	1	
13 STUDEBAKER Rd PM R17.08 EB	13A	EB ON	F Mod	279.9	4.4	35	1.6	1	
	13B	EB ON	F RSP A88A	100.1	1.6	14	-	1	
14 STUDEBAKER Rd PM R17.08 WB	14A	WB OFF	F RSP A88A	129.7	2.0	13	0.1	1	
	14B	WB OFF	B RSP A88A	300.8	4.7	25	2.2	1	1
15 PIONEER Blvd PM R18.09 WB	15A	WB ON	F Mod	360.9	5.6	28	1.9	1	
	15B	WB ON	C Mod	215.9	3.4	19	1.7	1	
	15C	WB OFF	D Mod	291.5	4.5	32	1.3	1	
	15D	WB OFF	F RSP A88A	105.4	1.6	17	0.7	1	
	15E	WB ON	F Mod	270.4	4.2	29	0.1	1	
	15F	WB ON	C Mod	148.5	2.3	20	0.8	1	
16 PIONEER Blvd PM R18.09 EB	16A	EB OFF	D Mod	350.0	5.4	20	3.6	1	
	16B	EB OFF	G RSP A88A	223.8	3.5	19	1.2	1	1
	16C	EB ON	F Mod	269.5	4.2	28	0.5	1	
	16D	EB ON	C Mod	133.7	2.1	18	0.8	1	
	16E	EB ON	F Mod	229.9	3.6	30	0.1	1	1
	16F	EB ON	C Mod	163.6	2.5	18	1.0	1	
17 NORWALK Blvd PM R18.67 WB	17A	WB ON	F Mod	344.1	5.4	26	1.0	1	
	17B	WB ON	C Mod	156.8	2.4	19	0.2	1	
	17C	WB OFF	F Mod (REVERSED)	227.3	3.5	30	0.9	1	
	17D	WB OFF	G RSP A88A	108.6	1.7	15	0.3	1	
SUB TOTAL SHEET Q-2				6,138.1	95.4	662	23.0	31	4

SUMMARY OF QUANTITIES
CURB RAMP
Q-2

STATE OF CALIFORNIA - DEPARTMENT OF TRANSPORTATION
Caltrans DESIGN
FUNCTIONAL SUPERVISOR M. OJI KALU
CALCULATED-DESIGNED BY VINCENT VALIDO
CHECKED BY LEWEN KUO
REVISED BY
DATE REVISED

LAST REVISION 6-5-15
DATE PLOTTED => 21-SEP-2015
TIME PLOTTED => 10:29

Dist	COUNTY	ROUTE	POST MILES TOTAL PROJECT	SHEET No.	TOTAL SHEETS
07	LA	91	R11.3/R20.7	104	192

Lewen Kuo 6-18-15
REGISTERED CIVIL ENGINEER DATE

8-10-15
PLANS APPROVAL DATE

REGISTERED PROFESSIONAL ENGINEER LEWEN KUO No. C52464 Exp. 12/31/16 CIVIL STATE OF CALIFORNIA

THE STATE OF CALIFORNIA OR ITS OFFICERS OR AGENTS SHALL NOT BE RESPONSIBLE FOR THE ACCURACY OR COMPLETENESS OF SCANNED COPIES OF THIS PLAN SHEET.

REMOVAL CURB RAMP QUANTITY

LOCATION		RAMP DIRECTION	(N) CURB RAMP AREA	REMOVE CONCRETE (CURB RAMP)
			SQFT	CY
17 NORWALK Blvd PM R18.67 WB	17E	WB ON	282.8	4.4
	17F	WB ON	118.2	1.8
18 NORWALK Blvd PM R18.67 EB	18A	EB OFF	260.0	4.0
	18B	EB OFF	73.6	1.1
	18C	EB ON	276.1	4.3
	18D	EB ON	66.0	1.0
	18E	EB ON	212.2	3.3
	18F	EB ON	131.0	2.1
19 ARTESIA Blvd PM R19.43 WB	19A	WB OFF	115.3	1.8
	19B	WB OFF	257.2	4.0
	19C	WB ON	175.3	2.7
	19D	WB ON	148.8	2.3
	19E	WB ON	165.9	2.6
20 PARK PLAZA Dr PM R19.81 EB	20A	EB OFF	210.9	3.3
	20B	EB ON	211.2	3.3
21 CARMINITA Rd PM R20.45 WB	21A	WB OFF	150.7	2.3
	21B	WB OFF	173.9	2.7
22 CARMINITA Rd PM R20.45 EB	22A	EB OFF	159.0	2.5
	22B	EB OFF	70.0	1.1
23 183rd St PM R20.16 WB	23A	WB ON	183.2	2.9
	23B	WB ON	124.1	1.9
24 183rd St PM R20.16 WB	24A	WB ON	314.6	4.9
	24B	WB ON	172.6	2.7
SUB TOTAL SHEET Q-3			4,052.6	63.0
SUB TOTAL SHEET Q-1			4,515.3	70.0
SUB TOTAL SHEET Q-2			4,670.3	72.4
TOTAL			13,238.2	205.4

CURB RAMP QUANTITY

LOCATION		RAMP DIRECTION	CASE	(N) CURB RAMP AREA	MINOR Conc (RETAINING CURB, SIDEWALK,CURB, CURB RAMP AND GUTTER)	DETECTABLE WARNING SURFACE	ROADWAY EXCAVATION (TYPE Z-2)	ROADWAY EXCAVATION	PRE/POST Const SURVEYS	RELOCATE ROADSIDE SIGN
				SQFT	CY	SQFT	CY	CY	EA	EA
17 NORWALK Blvd PM R18.67 WB	17E	WB ON	F Mod	335.1	5.5	31	1.1		1	
	17F	WB ON	142.1	C Mod	2.2	19	0.4		1	
18 NORWALK Blvd PM R18.67 EB	18A	EB OFF	D Mod	409.2	6.4	18	2.4		1	1
	18B	EB OFF	F RSP A88A	73.6	1.1	14	-		1	1
	18C	EB ON	F Mod	351.6	5.5	30	1.2		1	
	18D	EB ON	C Mod	169.2	2.6	20	1.6		1	1
	18E	EB ON	F Mod	218.4	3.4	30	0.1		1	
	18F	EB ON	C Mod	178.9	2.8	20	0.7		1	
19 ARTESIA Blvd PM R19.43 WB	19A	WB OFF	F Mod (REVERSED)	200.8	3.1	31	1.3		1	
	19B	WB OFF	TYPE B PASSAGEWAY RSP A88A	285.9	4.4	42	0.4		1	
	19C	WB ON	C RSP A88A	175.3	2.7	15	-		1	
	19D	WB ON	C Mod	148.8	2.3	16	-		1	
	19E	WB ON	C Mod	210.5	3.3	16	0.7		1	
20 PARK PLAZA Dr PM R19.81 EB	20A	EB OFF	C Mod (REVERSED)	230.6	3.6	18	0.3		1	
	20B	EB ON	C Mod	230.2	3.6	18	-	0.3	1	
21 CARMINITA Rd PM R20.45 WB	21A	WB OFF	F RSP A88A	162.9	2.5	19	0.2		1	
	21B	WB OFF	F Mod (REVERSED)	221.5	3.4	36	0.7		1	
22 CARMINITA Rd PM R20.45 EB	22A	EB OFF	F Mod (REVERSED)	252.4	3.9	31	-	1.4	1	
	22B	EB OFF	F RSP A88A	102.1	1.6	20	-	0.5	1	
23 183rd St PM R20.16 WB	23A	WB ON	F RSP A88A	189.7	3.0	18	0.1		1	
	23B	WB ON	F RSP A88A	142.3	2.2	18	0.3		1	1
24 183rd St PM R20.16 WB	24A	WB ON	F Mod	368.6	5.7	36	0.8		1	
	24B	WB ON	C Mod	178.2	2.8	18	0.1		1	
SUB TOTAL SHEET Q-3				4,977.9	77.6	534	12.4	2.2	23	4
SUB TOTAL SHEET Q-1				6,368.0	84.3	668	16.4		32	4
SUB TOTAL SHEET Q-2				6,138.1	95.4	662	23.0		31	4
TOTAL				17,484.0	257.3	1,837	51.8	2.2	86	12

(N) - NOT A SEPARATE PAY ITEM. FOR INFORMATION ONLY

SUMMARY OF QUANTITIES
CURB RAMP

Q-3

STATE OF CALIFORNIA - DEPARTMENT OF TRANSPORTATION
DESIGN
Caltrans
FUNCTIONAL SUPERVISOR: M. OJI KALU
CALCULATED-DESIGNED BY: VINCENT VALIDO
CHECKED BY: LEWEN KUO
REVISED BY
DATE REVISED

LAST REVISION 6-5-15
DATE PLOTTED => 21-SEP-2015
TIME PLOTTED => 10:29

Dist	COUNTY	ROUTE	POST MILES TOTAL PROJECT	SHEET No.	TOTAL SHEETS
07	LA	91	R11.3/R20.7	105	192

REGISTERED CIVIL ENGINEER 6-18-15 DATE

8-10-15
PLANS APPROVAL DATE

REGISTERED PROFESSIONAL ENGINEER LEWEN KUO No. C52464 Exp. 12/31/16 CIVIL STATE OF CALIFORNIA

THE STATE OF CALIFORNIA OR ITS OFFICERS OR AGENTS SHALL NOT BE RESPONSIBLE FOR THE ACCURACY OR COMPLETENESS OF SCANNED COPIES OF THIS PLAN SHEET.

METAL BEAM GUARD RAILING QUANTITY (1)

EASTBOUND ROUTE 91 MAINLINE AND RAMPS

POST MILE (R)	DIRECTION	LOCATION	REMOVE CRASH CUSHION	REMOVE GUARDRAIL	TREATED WOOD WASTE	MIDWEST GUARDRAIL SYSTEM (WOOD POST)	MIDWEST GUARDRAIL SYSTEM (7' WOOD POST)	DOUBLE MIDWEST GUARDRAIL SYSTEM (WOOD POST)	ALTERNATIVE IN-LINE TERMINAL SYSTEM	ALTERNATIVE FLARED TERMINAL SYSTEM	END ANCHOR ASSEMBLY (TYPE SFT)	END CAP (TYPE A)	TRANSITION RAILING (TYPE WB-31)	MINOR CONCRETE (MINOR STRUCTURE) ** (N)	CRASH CUSHION (TYPE SCI 100GM)	DELINEATOR (CLASS 1) *	VEGETATION CONTROL (MINOR CONCRETE)	MINOR CONCRETE (MINOR STRUCTURE)	DRILL AND BOND (DOWEL BAR)	END CAP (TYPE C)	
			EA	LF	LB	LF	LF	LF	EA	EA	EA	EA	EA	CY	EA	EA	SQYD	CY	EA	EA	
12.26	EB	EB ON FROM ATLANTIC Blvd	-	63	1,447	-	-	-	-	1	-	-	1	-	-	14	33	1.73	10	-	
13.263	EB	CHERRY Ave ON-RAMP	-	169	3,323		97	-	-	1	-	-	1	-	-	29	85	1.73	10	-	
13.452	EB	PARAMOUNT Blvd OFF-RAMP		205	3,960	-	170	-	-	-	-	1	1	-	-	35	104	1.73	10	-	
13.594	EB	PARAMOUNT Blvd UC	-	140	2,810	-	68	-	1	-	-	-	1	-	-	25	87	1.83	10	-	
14.472	EB	EB OFF TO LAKEWOOD Blvd	-	75	1,438	37.5		-	-	1	1	-	-		-	9	40				
14.472	EB	91/19 SEPARATION	15	133	3,097	419	-	-	-	-	1	-	1	1.7	1	70	332	0.7	10	1	
14.601	EB	FROM LAKEWOOD Blvd SB		63	1,770	0				1	-	-	1			8	34				
14.683	EB	LAKEWOOD BlvdON RAMP	-	640	11,440	-	602	-	-	1	1	-	-		-	53	341				
14.865	EB	WEST OF CLARK Ave UC	-	173	3,450	144						1	1	-	-	17	0	0.7	10		
15.105	EB	EAST OF CLARK Ave UC	-	69	1,110	40						1	1	-		6	37	0.7	10		
15.479	EB	BELLFLOWER Blvd ON RAMP	14	89	1,686	52	-		1		1					8					
15.614	EB	WEST OF BELLFLOWER Blvd UC	-	551	10,305	-	526	25	-	-	1	-	1	1.7	1	93	294		-	1	
15.614	EB	EAST OF BELLFLOWER Blvd UC	-	475	8,739	-	450	-	-	-	1		1	-	-	81	253	-	-	-	
16.069	EB	WOODRUFF Ave UC		63	1,447	0	-	-	-	1	-	-	1	-	-	15	33	1.73	10	-	
16.760	EB	91/605 GORE AREA	-	600	10,951	563	-	-	-	1	1	-	-	-	-	101	320	-	-	-	
17.000	EB																				
17.278	EB	STUDEBAKER ROAD ON RAMP	-	76	1,677	39	-	-	-	1	1	-	-	-	-	13	-	-	-	-	
17.570	EB																				
17.840	EB																				
18.185	EB	W OF NORWALK Blvd OFF RAMP (CANTILEVER SIGN)	-	72	1,385	34	-	-	-	1	1	-	-	-	-	9	-	-	-	-	
		SHEET TOTAL	29	3,656	70,035	1,328	1,913	25	2	9	9	3	11		2	586	1,993	11	80	2	

* PLACE DELINEATOR AT EVERY OTHER POST

** IT'S FOR CRASH CUSHION SCI-100GM PAD
(N) FOR INFORMATION ONLY, NOT A SEPARATE PAY ITEM

SUMMARY OF QUANTITIES
Q-4

STATE OF CALIFORNIA - DEPARTMENT OF TRANSPORTATION
Caltrans® DESIGN

FUNCTIONAL SUPERVISOR: M. OJI KALU
GORDON F KUO — LEWEN KUO
REVISED BY — DATE REVISED
CALCULATED-DESIGNED BY — CHECKED BY

LAST REVISION 04-21-15 | DATE PLOTTED => 21-SEP-2015 | TIME PLOTTED => 10:29

Dist	COUNTY	ROUTE	POST MILES TOTAL PROJECT	SHEET No.	TOTAL SHEETS
07	LA	91	R11.3/R20.7	106	192

REGISTERED CIVIL ENGINEER 6-18-15 DATE

8-10-15
PLANS APPROVAL DATE

REGISTERED PROFESSIONAL ENGINEER LEWEN KUO No. C52464 Exp. 12/31/16 CIVIL STATE OF CALIFORNIA

THE STATE OF CALIFORNIA OR ITS OFFICERS OR AGENTS SHALL NOT BE RESPONSIBLE FOR THE ACCURACY OR COMPLETENESS OF SCANNED COPIES OF THIS PLAN SHEET.

METAL BEAM GUARD RAILING QUANTITY (2)

EASTBOUND ROUTE 91 MAINLINE AND RAMPS

POST MILE (R)	DIRECTION	LOCATION	REMOVE CRASH CUSHION	REMOVE GUARDRAIL	TREATED WOOD WASTE	MIDWEST GUARDRAIL SYSTEM (WOOD POST)	MIDWEST GUARDRAIL SYSTEM (7' WOOD POST)	DOUBLE MIDWEST GUARDRAIL SYSTEM (WOOD POST)	ALTERNATIVE IN-LINE TERMINAL SYSTEM	ALTERNATIVE FLARED TERMINAL SYSTEM	END ANCHOR ASSEMBLY (TYPE SFT)	END CAP (TYPE A)	TRANSITION RAILING (TYPE WB-31)	MINOR CONCRETE (MINOR STRUCTURE) ** (N)	CRASH CUSHION (TYPE SCI 100GM)	DELINEATOR (CLASS 1) *	VEGETATION CONTROL (MINOR CONCRETE)	MINOR CONCRETE (MINOR STRUCTURE)	DRILL AND BOND (DOWEL BAR)	
			EA	LF	LB	LF	LF	LF	EA	EA	EA	EA	EA	CY	EA	EA	SQYD	CY	EA	
18.251	EB	NB PIONEER Blvd ON RAMP	-	80	1,748	-	13	-	-	1	-	-	1	-	-	17	40	1.73	10	
18.251	EB	EAST OF PIONEER Blvd	-	70	1,571	33	-	-	-	1	1	-	-	-	-	16	37	-	-	
18.444	EB	NORWALK Blvd OFF RAMP (OH SIGN)		76	1,566	39	-	-	-	1	1	-	-	-	-	15	41	-	-	
18.568	EB	E OF NORWALK Blvd OFF RAMP (CANTILEVER SIGN)		76	1,566	39	-	-	-	1	1	-	-	-	-	15	41	-	-	
18.641	EB	SB NORWALK Blvd ON		63	1,447	19	-	-	-	1	-	-	1	-	-	14	35	0.7	10	
19.162	EB	BLOOMFIELD Ave OC Br STRUCTURE		161	3,181	6	-	-	-	1	1	1	1	-	-	9	49	-	-	
19.293	EB	E OF BLOOMFIELD Ave OC (CANTILEVER SIGN)		77	1,695	40	-	-	-	1	1	-	-	-	-	15	41	-	-	
19.518	EB	SHOEMAKER Ave OFF RAMP (CANTILEVER SIGN)		65	1,482	28	-	-	-	1	1	-	-	-	-	14	35	-	-	IN FRONT OF POLE SEE RSP A77R3
20.000	EB	W OF 183rd St OC Br (CANTILEVER SIGN)		88	2,000	51	-	-	-	1	1	-	-	-	-	17	47	-	-	IN FRONT OF POLE SEE RSP A77R3
20.121	EB	183rd St OC Br		94	2,106	22	-	-	-	1	-	-	1	-	-	16	45	1.73	10	
20.323	EB	CARMENITA ROAD OFF RAMP (CANTILEVER SIGN)		80	1,858	43	-	-	-	1	1	-	-	-	-	16	44	-	-	
20.421	EB	W OF CARMENITA ROAD OC Br	-	80	1,858	43	-	-	-	1	1	-	-	-	-	16	44	-	-	
			-																	
			-																	
			-																	
			-																	
			-																	
		SHEET TOTAL		1,010	22,078	363	13			12	9	1	4			180	499	4.2	30	

* PLACE DELINEATOR AT EVERY OTHER POST

** IT'S FOR CRASH CUSHION SCI-100GM PAD

(N) FOR INFORMATION ONLY, NOT A SEPARATE PAY ITEM

SUMMARY OF QUANTITIES
Q-5

GORDON F KUO — REVISED BY
LEWEN KUO — DATE REVISED
CALCULATED-DESIGNED BY
CHECKED BY
FUNCTIONAL SUPERVISOR
M. OJI KALU
STATE OF CALIFORNIA - DEPARTMENT OF TRANSPORTATION
Caltrans
DESIGN

LAST REVISION 12-30-14 | DATE PLOTTED => 21-SEP-2015 | TIME PLOTTED => 10:29

Dist	COUNTY	ROUTE	POST MILES TOTAL PROJECT	SHEET No.	TOTAL SHEETS
07	LA	91	R11.3/R20.7	107	192

REGISTERED CIVIL ENGINEER 6-18-15 DATE

8-10-15
PLANS APPROVAL DATE

REGISTERED PROFESSIONAL ENGINEER LEWEN KUO No. C52464 Exp. 12/31/16 CIVIL STATE OF CALIFORNIA

THE STATE OF CALIFORNIA OR ITS OFFICERS OR AGENTS SHALL NOT BE RESPONSIBLE FOR THE ACCURACY OR COMPLETENESS OF SCANNED COPIES OF THIS PLAN SHEET.

METAL BEAM GUARD RAILING QUANTITY (3)

WESTBOUND ROUTE 91 MAINLINE AND RAMPS

POST MILE (R)	DIRECTION	LOCATION	REMOVE CRASH CUSHION	REMOVE GUARDRAIL	TREATED WOOD WASTE	MIDWEST GUARDRAIL SYSTEM (WOOD POST)	MIDWEST GUARDRAIL SYSTEM (7' WOOD POST)	DOUBLE MIDWEST GUARDRAIL SYSTEM (WOOD POST)	ALTERNATIVE IN-LINE TERMINAL SYSTEM	ALTERNATIVE FLARED TERMINAL SYSTEM	END ANCHOR ASSEMBLY (TYPE SFT)	END CAP (TYPE A)	TRANSITION RAILING (TYPE WB-31)	MINOR CONCRETE (MINOR STRUCTURE) ** (N)	CRASH CUSHION (TYPE SCI 100GM)	DELINEATOR (CLASS 1) *	VEGETATION CONTROL (MINOR CONCRETE)	MINOR CONCRETE (MINOR STRUCTURE)	DRILL AND BOND (DOWEL BAR)	END CAP (TYPE C)	
			EA	LF	LB	LF	LF	LF	EA	EA	EA	EA	EA	CY	EA	EA	SQYD	CY	EA	EA	
11.736	WB	91/710 SEPARATION	-	50	1,217	25	-	-	-	-	1	-	1	-	-	11	33	-	-		
11.736	WB	91/710 SEPARATION	-	50	1,217	25	-	-	-	-	1	-	1	-	-	11	33	-	-		
13.274	WB	CHERRY Ave OFF-RAMP		78	1,712	41	-	-	-	1	1	-	-	-	-	15	42	-	-		
13.462	WB	PARAMOUNT Blvd ON-RAMP	-	637	11,385	600	-	-	-	1	1	-	-	-	-	105	425	-	-		
13.594	WB																				
13.981	WB																				
14.103	WB	E OF DOWNEY Ave UC		65	1,261	6	-	-	-	1	-	-	1	-	-	-	45	-	-		
14.103	WB																				
14.247	WB	DOWNEY Ave OFF-RAMP		78	1,712	41	-	-	-	1	1	-	-	-	-	15	42	-	-		
14.54	WB	WB ON FROM NB LAKEWOOD Blvd		65	1,264	6	-	-	-	1	-	-	1	-	-	14	45				
14.601	WB	91/19 SEPARATION	-	133	3,097	419	-	-	-	-	1	-	1	1.7	1	70	293	0.7	10	1	
15.105	WB	CLARK Ave UC		78	1,491	6							1	-	-	13	34	1.73	10		
15.479	WB	BELLFLOWER Blvd ON RAMP	-	183	3,460	-	146	-	-	1	1	-	-	-	-	32	98	-	-		
15.614	WB	W OF SAN GABRIEL RIVER		243	4,411		210	-	-	-	-	1	1	-	-	42	130	1.4	20		
16.616	WB																				
16.892	WB																				
16.834	WB	W OF 91/605 INTERCHANGE (CANTILEVER SIGN)	-	114	2,128	77	-	-	-	1	1	-	-	-	-	21	61	-	-		
17.124	WB	STUDEBAKER ROAD UC Br APPROACH		66	1,279	6			1				1			12	30	0.7	10		
17.270	WB																				
17.440	WB	91/605 INTERCHANGE OH SIGN (LEFT SIDE)		88	1,668	51	-	-	-	1	1	-	-	-	-	17	47	-	-		
17.583	WB																				
		SHEET TOTAL		1,928	37,302	1,303	356		1	8	9	1	8		1	378	1358	4.5	50	1	

* PLACE DELINEATOR AT EVERY OTHER POST

** IT'S FOR CRASH CUSHION SCI-100GM PAD

(N) FOR INFORMATION ONLY, NOT A SEPARATE PAY ITEM

SUMMARY OF QUANTITIES

Q-6

STATE OF CALIFORNIA - DEPARTMENT OF TRANSPORTATION

Caltrans DESIGN

FUNCTIONAL SUPERVISOR: M. OJI KALU

CALCULATED-DESIGNED BY: GORDON F KUO

CHECKED BY: LEWEN KUO

REVISED BY

DATE REVISED

LAST REVISION 12-30-14

DATE PLOTTED => 21-SEP-2015

TIME PLOTTED => 10:29

Dist	COUNTY	ROUTE	POST MILES TOTAL PROJECT	SHEET No.	TOTAL SHEETS
07	LA	91	R11.3/R20.7	108	192

REGISTERED CIVIL ENGINEER 6-18-15 DATE

8-10-15
PLANS APPROVAL DATE

REGISTERED PROFESSIONAL ENGINEER LEWEN KUO No. C52464 Exp. 12/31/16 CIVIL STATE OF CALIFORNIA

THE STATE OF CALIFORNIA OR ITS OFFICERS OR AGENTS SHALL NOT BE RESPONSIBLE FOR THE ACCURACY OR COMPLETENESS OF SCANNED COPIES OF THIS PLAN SHEET.

METAL BEAM GUARD RAILING QUANTITY (4)

WESTBOUND ROUTE 91 MAINLINE AND RAMPS

POST MILE (R)	DIRECTION	LOCATION	REMOVE CRASH CUSHION	REMOVE GUARDRAIL	TREATED WOOD WASTE	MIDWEST GUARDRAIL SYSTEM (WOOD POST)	MIDWEST GUARDRAIL SYSTEM (7' WOOD POST)	DOUBLE MIDWEST GUARDRAIL SYSTEM (WOOD POST)	ALTERNATIVE IN-LINE TERMINAL SYSTEM	ALTERNATIVE FLARED TERMINAL SYSTEM	END ANCHOR ASSEMBLY (TYPE SFT)	END CAP (TYPE A)	TRANSITION RAILING (TYPE WB-31)	MINOR CONCRETE (MINOR STRUCTURE) ** (N)	CRASH CUSHION (TYPE SCI 100GM)	DELINEATOR (CLASS 1) *	VEGETATION CONTROL (MINOR CONCRETE)	MINOR CONCRETE (MINOR STRUCTURE)	DRILL AND BOND (DOWEL BAR)	END CAP (TYPE C)	NOTE
			EA	LF	LB	LF	LF	LF	EA	EA	EA	EA	EA	CY	EA	EA	SQYD	CY	EA	EA	
17.844	WB	BETWEEN PIONEER Blvd AND GRIDLEY ROAD	-	1,072	19,305	1,035				1	1	-	-	-	-	175	-	-	-		
18.015	WB	E OF PIONEER Blvd UC (CANTILEVER SIGN)	-	78	1,712	41	-	-	-	1	1	-	-	-	-	15	42	-	-		
18.171	WB	W OF PIONEER Blvd UC (CANTILEVER SIGN)		78	1,712	41	-	-	-	1	1	-	-	-	-	15	42	-	-		
18.241	WB	W OF PIONEER Blvd OFF RAMP (CAMERA POLE)		78	1,712	41	-	-	-	1	1	-	-	-	-	15	42	-	-		
18.758	WB	W OF NORWALK Blvd OFF RAMP (CANTILEVEL SIGN)		78	1,712	41	-	-	-	1	1	-	-	-	-	15	42	-	-		
19.179	WB	BLOOMFIELD Ave OC Br STRUCTURE		203	3,925	25	-	-	-	1	-	-	1	-	-	19	66	-	-		IN FRONT OF POLE SEE RSP A77R3
19.471	WB	ARTESIA Blvd OC		65	1,482	0	-	-	-	1	-	-	1	-	-	13	33	1.73	10		
19.511	WB	E OF ARTESIA Blvd OC (CMS SIGN)	-	253	4,810	216	-	-	-	1	1	-	-	-	-	43	135	-	-		
19.677	WB	ARTESIA Blvd OFF RAMP (CANTILEVER SIGN)	-	78	1,712	41	-	-	-	1	1	-	-	-	-	15	42	-	-		
			-										-								
20.236	WB	183rd STREET ON RAMP	-	467	8,597	430	-	-	1	-	1	-	-	-	-	78	249	-	-		
20.627	WB	CARMENITA ROAD OFF RAMP	-	1,148	20,650	1,148	-	-	-	-	1	1	-	-	-	187	612	-	-		
			-			-							-								
						-															
		SHEET TOTAL		3,598	67,329	3,060			1	9	9	1	2			590	1,305	1.73	10		
		SHEET Q-4 TOTAL	29	3,656	70,035	1,328	1,913	25	2	9	9	3	11		2	586	1,993	11	80	2	
		SHEET Q-5 TOTAL		1,010	22,078	363	13			12	9	1	4			180	499	4.2	30		
		SHEET Q-6 TOTAL	-	1,928	37,302	1,303	356		1	8	9	1	8		1	378	1,358	4.5	50	1	
		TOTAL	29	10,192	196,744	6,054	2,282	25	4	38	36	6	25		3	1,734	5,155	21.4	170	3	

* PLACE DELINEATOR AT EVERY OTHER POST

** IT'S FOR CRASH CUSHION SCI-100GM PAD

(N) FOR INFORMATION ONLY, NOT A SEPARATE PAY ITEM

SUMMARY OF QUANTITIES
Q-7

GORDON F KUO — REVISED BY
LEWEN KUO — DATE REVISED
CALCULATED-DESIGNED BY
CHECKED BY
FUNCTIONAL SUPERVISOR M. OJI KALU

STATE OF CALIFORNIA - DEPARTMENT OF TRANSPORTATION
Caltrans
DESIGN

LAST REVISION 06-04-15 | DATE PLOTTED => 21-SEP-2015 | TIME PLOTTED => 10:29

Dist	COUNTY	ROUTE	POST MILES TOTAL PROJECT	SHEET No.	TOTAL SHEETS
07	LA	91	R11.3/R20.7	109	192

REGISTERED CIVIL ENGINEER 6-18-15 DATE

8-10-15
PLANS APPROVAL DATE

REGISTERED PROFESSIONAL ENGINEER LEWEN KUO No. C52464 Exp. 12/31/16 CIVIL STATE OF CALIFORNIA

THE STATE OF CALIFORNIA OR ITS OFFICERS OR AGENTS SHALL NOT BE RESPONSIBLE FOR THE ACCURACY OR COMPLETENESS OF SCANNED COPIES OF THIS PLAN SHEET.

RAMPS SUMMARY OF QUANTITIES (1)

RAMP No.	LOCATION	DIRECTION		COLD PLANE ASPHALT CONCRETE PAVEMENT	RUBBERIZED HOT MIX ASPHALT (GAP GRADED)	ROADWAY EXCAVATION	LEAN CONCRETE BASE RAPID SETTING	CLASS 3 AGGREGATE BASE	JOINTED PLAIN CONCRETE PAVEMENT (RAPID STRENGTH CONCRETE)	TACK COAT	BASE BOND BREAKER	GRIND EXISTING CONCRETE PAVEMENT
		EB	WB	SQYD	TON	CY	CY	CY	CY	TON	SQYD	SQYD
1	ATLANTIC Ave ON RAMP		X	2,618	256		-	-	-	2.5		
2	ATLANTIC Ave OFF RAMP		X	3,356	328		-	-	-	3.3		
3	ATLANTIC Ave ON RAMP	X		3,993	391		-	-	-	3.9		
4	ATLANTIC Ave OFF RAMP	X		2,197	215		-	-	-	2.1		
5	CHERRY Ave ON RAMP		X	3,380	331		-	-	-	3.3		
6	CHERRY Ave OFF RAMP		X	3,328	326		-	-	-	3.2		
7	CHERRY Ave ON RAMP	X		4,300	421				-	4.2		
8	CHERRY Ave OFF RAMP	X		4,069	398		-	-	-	3.9		
9	PARAMOUNT Blvd ON RAMP		X	2,820	276		-	-	-	2.7		
10	PARAMOUNT Blvd OFF RAMP		X	2,303	225	132	23	46	63	2.2	198	198
11	PARAMOUNT Blvd ON RAMP	X		3,329	326		-	-	-	3.2		
12	PARAMOUNT Blvd OFF RAMP	X		3,500	343		-	-	-	3.4		
13	DOWNEY Ave ON RAMP		X	3,649	357				-	3.5		
14	DOWNEY Ave OFF RAMP		X	2,282	223		-	-	-	2.2		
15	DOWNEY Ave ON RAMP	X		2,544	249		-	-	-	2.5		
16	DOWNEY Ave OFF RAMP	X		2,107	206				-	2.0		
17	SB LAKEWOOD Blvd ON RAMP		X	2,895	283		-	-	-	2.8		
18	NB LAKEWOOD Blvd ON RAMP		X	3,959	387		-	-	-	3.8		
19	LAKEWOOD Blvd OFF RAMP		X	9,520	932		-	-	-	9.2		
20	SB LAKEWOOD Blvd ON RAMP	X		3,758	368		-	-	-	3.6		
21	NB LAKEWOOD Blvd ON RAMP	X		6,061	593		-	-	-	5.9		
22	LAKEWOOD Blvd OFF RAMP	X		3,487	341		-	-	-	3.4		
23	CLARK Ave ON RAMP		X	3,599	352				-	3.5		
24	CLARK Ave OFF RAMP	X		3,156	309		-	-	-	3.1		
25	BELLFLOWER Blvd ON RAMP		X	3,271	320		-	-	-	3.2		
26	BELLFLOWER Blvd OFF RAMP		X	3,904	382				-	3.8		
27	BELLFLOWER Blvd ON RAMP	X		4,276	419		-	-	-	4.1		
28	BELLFLOWER Blvd OFF RAMP	X		4,217	413		-	-	-	4.1		
SUBTOTAL				101,878	9,970	132	23	46	63	98.6	198	198

SUMMARY OF QUANTITIES

Q-8

STATE OF CALIFORNIA - DEPARTMENT OF TRANSPORTATION
Caltrans® DESIGN

FUNCTIONAL SUPERVISOR: M. OJI KALU
CALCULATED-DESIGNED BY: GORDON F KUO
CHECKED BY: LEWEN KUO
REVISED BY
DATE REVISED

LAST REVISION 06-05-15 | DATE PLOTTED => 21-SEP-2015 | TIME PLOTTED => 10:29

Dist	COUNTY	ROUTE	POST MILES TOTAL PROJECT	SHEET No.	TOTAL SHEETS
07	LA	91	R11.3/R20.7	110	192

REGISTERED CIVIL ENGINEER 6-18-15 DATE

8-10-15
PLANS APPROVAL DATE

REGISTERED PROFESSIONAL ENGINEER LEWEN KUO No. C52464 Exp. 12/31/16 CIVIL STATE OF CALIFORNIA

THE STATE OF CALIFORNIA OR ITS OFFICERS OR AGENTS SHALL NOT BE RESPONSIBLE FOR THE ACCURACY OR COMPLETENESS OF SCANNED COPIES OF THIS PLAN SHEET.

RAMPS SUMMARY OF QUANTITIES (2)

RAMP No.	LOCATION	DIRECTION		COLD PLANE ASPHALT CONCRETE PAVEMENT	RUBBERIZED HOT MIX ASPHALT (GAP GRADED)	ROADWAY EXCAVATION	LEAN CONCRETE BASE RAPID SETTING	CLASS 3 AGGREGATE BASE	JOINTED PLAIN Conc PAVEMENT (RAPID STRENGTH CONCRETE)	BASE BOND BREAKER	TACK COAT	GRIND EXISTING CONCRETE PAVEMENT
		EB	WB	SQYD	TON	CY	CY	CY	CY	SQYD	TON	SQYD
29	STUDEBAKER Rd OFF RAMP		X	3,774	369		-	-	-		3.7	
30	STUDEBAKER Rd ON RAMP	X		6,084	595		-	-	-		5.9	
31	SB PIONEER Blvd ON RAMP		X	5,133	502		-	-	-		5.0	
32	NB PIONEER Blvd ON RAMP		X	2,532	248		-	-	-		2.5	
33	PIONEER Blvd OFF RAMP		X	4,976	487		-	-	-		4.8	
34	SB PIONEER Blvd ON RAMP	X		2,255	221		-	-	-		2.2	
35	NB PIONEER Blvd ON RAMP	X		3,674	360		-	-	-		3.6	
36	PIONEER Blvd OFF RAMP	X		4,117	403	493	86.4	173	234	740	4.0	
37	SB NORWALK Blvd ON RAMP		X	4,591	449		-	-	-		4.5	
38	NB NORWALK Blvd ON RAMP		X	2,430	238		-	-	-		2.4	
39	NORWALK Blvd OFF RAMP		X	4,037	395		-	-	-		3.9	
40	SB NORWALK Blvd ON RAMP	X		2,550	250		-	-	-		2.5	
41	NB NORWALK Blvd ON RAMP	X		3,252	318		-	-	-		3.2	
42	NORWALK Blvd OFF RAMP	X		3,565	349	477	83.6	167	226	715	3.5	
43	BLOOMFIELD Ave ON RAMP		X	4,563	447		-	-	-		4.4	
44	BLOOMFIELD Ave OFF RAMP	X		3,206	314		-	-	-		3.1	
45	ARTESIA Blvd ON RAMP		X	4,081	399		-	-	-		4.0	
46	ARTESIA Blvd OFF RAMP		X	3,229	316		-	-	-		3.1	
47	PARK PLAZA Dr ON RAMP	X		1,305	128		-	-	-		1.3	
48	PARK PLAZA Dr OFF RAMP	X		1,736	170		-	-	-		1.7	
49	183Rd St ON RAMP		X	6,272	614		-	-	-		6.1	
50	CARMENITA Rd OFF RAMP		X	2,086	204		-	-	-		2.0	
51	CARMENITA Rd OFF RAMP	X		4,454	436		-	-	-		4.3	
SUBTOTAL THIS SHEET				83,902	8,212	970	170	340	460	1,455	81.7	
SUBTOTAL FROM SHEET Q-3						2.2						
SUBTOTAL FROM SHEET Q-8				101,878	9,970	132	23	46	63	198	98.6	198
SUBTOTAL FROM SHEET Q-10				116,664	11,418					4,920	74.3	172,154
SUBTOTAL FROM SHEET Q-11						8,840	1,547	3,094	4,199	13,263		
TOTAL				302,444	29,600	9,944	1,740	3,480	4,722	19,836	254.6	172,352

SUMMARY OF QUANTITIES

Q-9

STATE OF CALIFORNIA - DEPARTMENT OF TRANSPORTATION
Caltrans
DESIGN

FUNCTIONAL SUPERVISOR: M. OJI KALU
CALCULATED-DESIGNED BY: GORDON F KUO
CHECKED BY: LEWEN KUO
REVISED BY
DATE REVISED

LAST REVISION 6-5-15
DATE PLOTTED => 21-SEP-2015
TIME PLOTTED => 10:29

Dist	COUNTY	ROUTE	POST MILES TOTAL PROJECT	SHEET No.	TOTAL SHEETS
07	LA	91	R11.3/R20.7	111	192

REGISTERED CIVIL ENGINEER 6-18-15 DATE

8-10-15
PLANS APPROVAL DATE

REGISTERED PROFESSIONAL ENGINEER LEWEN KUO No. C52464 Exp. 12/31/16 CIVIL STATE OF CALIFORNIA

THE STATE OF CALIFORNIA OR ITS OFFICERS OR AGENTS SHALL NOT BE RESPONSIBLE FOR THE ACCURACY OR COMPLETENESS OF SCANNED COPIES OF THIS PLAN SHEET.

NOTES: 1. WEAKENED PLANE JOINT TO WEAKENED PLANE JOINT CONSTITUTES ONE SLAB.
2. SLAB LOCATIONS ARE APPROXIMATE. EXACT LOCATIONS WILL BE DETERMINED BY THE ENGINEER.

LEGENDS: LNMI - LANE MILE
CONN - CONNECTOR
(N) - NOT A SEPARATE PAY ITEM, FOR INFORMATION ONLY.

Fwy MAIN LINE ROADWAY QUANTITIES

LOCATION		DIRECTION		NUMBER OF SLABS (N) (EACH)					INDIVIDUAL PRECAST SLAB REPLACEMENT (IPSR)	DRILL AND BOND (DOWEL BAR)	BASE BOND BREAKER	ISOLATION JOINT SEAL (PREFORMED COMPRESSION)	REMOVE CONCRETE PAVEMENT	REPAIR SPALLED SURFACE AREA **	COLD PLANE ASPHALT CONCRETE PAVEMENT	TACK COAT	RUBBERIZED HOT MIX ASPHALT, SUPERPAVE (GAP GRADED)	CRACK TREATMENT	GRIND EXISTING CONCRETE PAVEMENT	REMOVE AC DIKE	PLACE HMA DIKE (TYPE A)	HMA (TYPE A)	NOTE
FROM	TO	EB	WB	LANE#1	LANE#2	LANE#3	LANE#4	LANE#5	CY	EA	SQYD	LF	SQYD	SQYD	SQYD	TON	TON	LNMI	SQYD	LF	LF	TON	
PM 11.32 LONG BEACH Blvd UC	PM 13.0 WALNUT Ave	X		-	5	20	9	-	167	544	680	1,836	680	24	7115	4.8	696	0.3					
			X	-	2	3	-	-	24	80	100	270	100	4	6,552	4.2	641	0.2					
PM 13.0 WALNUT Ave	PM 13.6 PARAMOUNT Blvd	X		-	-	9	7	-	80	256	320	864	320	18	3,226	2.1	316	0.1					
			X	-	-	1	-	-	5	16	20	54	20	4	3,899	2.5	381	0.1					
PM 13.6 PARAMOUNT Blvd	PM 14.1 DOWNEY Ave	X		-	-	3	6	-	45		180	486	180	8	2,185	0.9	213	0.1					
			X	-	-	5	2	-	35	112	140	378	140	4	2,902	1.8	284	0.1					
PM 14.1 DOWNEY Ave	PM 14.61 LAKEWOOD Blvd	X		-	-	7	6	-	65	208	260	702	260	8	5,142	3.3	503	0.1					
			X	-	1	17	18	-	180	576	720	1,944	720	28	5,390	3.4	528	0.1					
PM 14.61 LAKEWOOD Blvd	PM 16.56 BELLFLOWER Blvd	X		-	-	30	15	-	225	720	900	2,430	900	32	9,212	5.8	902	0.2					
			X	-	-	-	-	-	0	0	0	0	0	4	13,463	8.6	1318	0.2					
PM 16.56 BELLFLOWER Blvd	PM 16.95 JCT Rte 605	X		1	3	15	15	-	150	544	600	1,620	600	24	811	0.5	79	0.1					
			X	-	-	5	5	5	75	240	300	810	300	12	1,591	1.0	156	0.1					
PM 16.95 JCT Rte 605	PM 18.10 PIONEER Blvd	X		-	-	10	5	-	75	240	300	810	300	12	6,772	4.4	663	0.2					
			X	-	-	-	-	-	0	0	0	0	0	8	6,525	4.1	639	0.2					
PM 18.10 PIONEER Blvd	PM 19.17 BLOOMFIELD Ave	X		-	-	5	5	-	50	160	200	540	200	4	8,612	5.5	843	0.2					
			X	-	-	-	-	-	0	0	0	0	0	4	7,677	4.9	751	0.2					
PM 19.17 BLOOMFIELD Ave	PM 20.45 CARMENITA Rd	X		-	-	-	-	-	0	0	0	0	0	4	9,480	6.1	928	0.2					
			X	-	-	5	5	-	50	160	200	540	200	8	11,796	7.7	1155	0.2					
PM 20.45 CARMENITA Rd	PM 20.74 LA/OC LINE														2,088	1.3	204	0.1					
															2,226	1.4	218	0.1					
PM 11.32 LONG BEACH Blvd UC	PM 20.74 LA/OC LINE	X	X																133,000				ON HOV LANE
CONN B - EB ROUTE 91 TO SB ROUTE 710 CONN														2				0.1	3,464				
CONN C - EB ROUTE 91 TO NB ROUTE 710 CONN														4				0.1	7,210				
CONN D - WB ROUTE 91 TO SB ROUTE 710 CONN														6				0.1	9,762				
CONN D - WB ROUTE 91 TO NB ROUTE 710 CONN														2				0.1	4,382				
CONN E - WB ROUTE 91 TO NB ROUTE 605 CONN														6				0.1	11,150	2,262	2,262	59.9	
CONN F - WB ROUTE 91 TO SB ROUTE 605 CONN														2				0.1	3,186	1,261	1,261	33.3	
		SUBTOTAL		250					1,226	4,000	4,920	13,282	4,920	232	116,664	74.3	11,418	3.7	172,154	3,523	3,523	93.2	

**: TO REPAIR SPALLED SURFACE AREA, USING POLYERTER CONCRETE, AND NOT FAST SETTING CONCRETE

SUMMARY OF QUANTITIES

Q-10

STATE OF CALIFORNIA - DEPARTMENT OF TRANSPORTATION
Caltrans DESIGN

FUNCTIONAL SUPERVISOR: M. OJI KALU
CALCULATED-DESIGNED BY: G. KUO, V. VALIDO
CHECKED BY: LEWEN KUO
REVISED BY
DATE REVISED

LAST REVISION 6-5-15
DATE PLOTTED => 21-SEP-2015
TIME PLOTTED => 10:30

Dist	COUNTY	ROUTE	POST MILES TOTAL PROJECT	SHEET No.	TOTAL SHEETS
07	LA	91	R11.3/R20.7	112	192

REGISTERED CIVIL ENGINEER 6-18-15 DATE

8-10-15
PLANS APPROVAL DATE

REGISTERED PROFESSIONAL ENGINEER LEWEN KUO No. C52464 Exp. 12/31/16 CIVIL STATE OF CALIFORNIA

THE STATE OF CALIFORNIA OR ITS OFFICERS OR AGENTS SHALL NOT BE RESPONSIBLE FOR THE ACCURACY OR COMPLETENESS OF SCANNED COPIES OF THIS PLAN SHEET.

NEW JPCP GORE AREA SUMMARY OF QUANTITIES

LOCATION	DIRECTION		ROADWAY EXCAVATION	LEAN CONCRETE BASE RAPID SETTING	CLASS 3 AGGREGATE BASE	JOINTED PLAIN CONCRETE PAVEMENT (RAPID STRENGTH CONCRETE)	BASE BOND BREAKER
	EB	WB	CY	CY	CY	CY	SQYD
LAKEWOOD Blvd ON-RAMP	X		2,686	470	940	1,276	4,029
LAKEWOOD Blvd OFF-RAMP		X	1,663	291	582	790	2,495
STUDEBAKER Rd OFF-RAMP		X	187	33	66	90	281
ROUTE 91 CONNECTOR TO ROUTE 605		X	435	76	152	207	653
NORWALK Blvd OFF-RAMP	X		489	86	172	232	734
NORWALK Blvd OFF-RAMP		X	470	82	164	223	705
ARTESIA Blvd ON-RAMP		X	1,187	208	416	564	1,781
SHOEMAKER Ave OFF-RAMP	X		258	45	90	122	387
SHOEMAKER Ave ON-RAMP	X		228	40	80	108	342
CARMINITA Rd OFF-RAMP		X	984	172	344	467	1,476
BETWEEN VALLEY VIEW St & CARMINITA Rd		X	253	44	88	120	380
TOTAL			8,840	1,547	3,094	4,199	13,263

Temp WATER POLLUTION CONTROL QUANTITIES

TEMPORARY GRAVEL BAG BERM	TEMPORARY DRAINAGE INLET PROTECTION	TEMPORARY FIBER ROLL
LF	EA	LF
20,000	180	30,000

SUMMARY OF QUANTITIES

Q-11

STATE OF CALIFORNIA - DEPARTMENT OF TRANSPORTATION
Caltrans® DESIGN

FUNCTIONAL SUPERVISOR: M. OJI KALU
CALCULATED-DESIGNED BY: VINCENT VALIDO
CHECKED BY: LEWEN KUO
REVISED BY
DATE REVISED

LAST REVISION 05-29-15 | DATE PLOTTED => 21-SEP-2015 | TIME PLOTTED => 10:30

Dist	COUNTY	ROUTE	POST MILES TOTAL PROJECT	SHEET No.	TOTAL SHEETS
07	LA	91	R11.3/R20.7	113	192

REGISTERED CIVIL ENGINEER 6-18-15 DATE

8-10-15
PLANS APPROVAL DATE

REGISTERED PROFESSIONAL ENGINEER LEWEN KUO No. C52464 Exp. 12/31/16 CIVIL STATE OF CALIFORNIA

THE STATE OF CALIFORNIA OR ITS OFFICERS OR AGENTS SHALL NOT BE RESPONSIBLE FOR THE ACCURACY OR COMPLETENESS OF SCANNED COPIES OF THIS PLAN SHEET.

ROUTE 91 EASTBOUND RAMPS

HOT MIX ASPHALT DIKE QUANTITY

	LOCATION	REMOVE AC DIKE	PLACE HMA DIKE (TYPE A)	PLACE HMA DIKE (TYPE C)	HMA (TYPE A)
		LF	LF	LF	TON
EB	ATLANTIC Ave ON RAMP	653	590	63	16.0
EB	ATLANTIC Ave OFF RAMP	370	370		9.8
EB	CHERRY Ave ON RAMP	800	737	63	19.9
EB	CHERRY Ave OFF RAMP	735	735		19.4
EB	PARAMOUNT Blvd ON RAMP	668	605	63	16.4
EB	PARAMOUNT Blvd OFF RAMP	630	620		16.4
EB	DOWNEY Ave ON RAMP	274	274		7.2
EB	DOWNEY Ave OFF RAMP	651	651		17.2
EB	SB LAKEWOOD Blvd ON RAMP	1,015	952	63	25.6
EB	NB LAKEWOOD Blvd ON RAMP	750	687	63	18.6
EB	LAKEWOOD Blvd OFF RAMP	475	412	63	11.3
EB	CLARK Ave ON RAMP	33	33		0.9
EB	BELLFLOWER Blvd ON RAMP	104	104		2.8
EB	BELLFLOWER Blvd OFF RAMP	85	85		2.2
EB	STUDEBAKER RD ON RAMP	554	554		14.7
EB	SB PIONEER Blvd ON RAMP	677	677		17.9
EB	NB PIONEER Blvd ON RAMP	654	581	63	15.8
EB	PIONEER Blvd OFF RAMP	754	754		19.9
EB	SB NORWALK Blvd ON RAMP	651	651		17.25
EB	NB NORWALK Blvd ON RAMP	838	838		22.2
EB	NORWALK Blvd OFF RAMP	730	667	63	18.1
EB	BLOOMFIELD Ave OFF RAMP	554	491	63	13.4
EB	PARK PLAZA Dr ON RAMP	133	133		3.5
EB	CARMENITA Rd OFF RAMP	812	749	63	20.2
	SUBTOTAL	13,600	12,950	630	346.6

ROUTE 91 WESTBOUND RAMPS

HOT MIX ASPHALT DIKE QUANTITY

	LOCATION	REMOVE AC DIKE	PLACE HMA DIKE (TYPE A)	PLACE HMA DIKE (TYPE C)	HMA (TYPE A)
		LF	LF	LF	TON
WB	ATLANTIC Ave ON RAMP	920	794	126	21.8
WB	ATLANTIC Ave OFF RAMP	588	588	-	15.6
WB	CHERRY Ave ON RAMP	670	607	63	16.5
WB	CHERRY Ave OFF RAMP	1,426	1,426	63	38.1
WB	PARAMOUNT Blvd ON RAMP	1,212	1,149	63	30.8
WB	PARAMOUNT Blvd OFF RAMP	679	679	-	18.0
WB	DOWNEY Ave ON RAMP	604	541	63	14.7
WB	DOWNEY Ave OFF RAMP	412	412	-	10.9
WB	SB LAKEWOOD Blvd ON RAMP	758	758	-	20.1
WB	NB LAKEWOOD BLVD ON RAMP	516	516	-	13.7
WB	LAKEWOOD Blvd OFF RAMP	140	140	-	3.7
WB	CLARK Ave OFF RAMP	180	180	-	4.8
WB	BELLFLOWER Blvd ON RAMP	-	143	63	4.2
WB	BELLFLOWER Blvd OFF RAMP	102	102	-	2.7
WB	STUDEBAKER Rd OFF RAMP	380	317	63	8.8
WB	SB PIONEER Blvd ON RAMP	863	-	-	33.8
WB	NB PIONEER Blvd ON RAMP	876	876	-	23.2
WB	PIONEER Blvd OFF RAMP	567	504	63	13.8
WB	SB NORWALK Blvd ON RAMP	998	935	63	25.2
WB	NB NORWALK Blvd ON RAMP	656	656	-	17.4
WB	NORWALK Blvd OFF RAMP	200	432	63	11.8
WB	BLOOMFIELD Ave ON RAMP	970	970	-	25.7
WB	ARTESIA Blvd ON RAMP	635	635	-	16.8
WB	ARTESIA Blvd OFF RAMP	350	505	63	13.8
WB	183RD St ON RAMP	835	1502	63	40.2
WB	CARMENITA Rd OFF RAMP	680	890	63	24.0
	SUBTOTAL	16,217	16,257	882	470.1

ROUTE 91 MAINLINE

HOT MIX ASPHALT DIKE QUANTITY

LOCATION FROM	LOCATION TO	REMOVE AC DIKE	PLACE HMA DIKE (TYPE A)	PLACE HMA DIKE (TYPE C)	HMA (TYPE A)
		LF	LF	LF	TON
PM 11.32 LONG BEACH Blvd UC	PM 13.0 CHERRY Ave	980	1,072	223	29.8
PM 13.0 CHERRY Ave	PM 13.6 PARAMOUNT Blvd	915	853	63	23.0
PM 13.6 PARAMOUNT Blvd	PM 14.1 DOWNEY Ave	419	454	63	12.4
PM 14.1 DOWNEY Ave	PM 14.61 LAKEWOOD Blvd	1,364	1,272	126	34.5
PM 14.61 LAKEWOOD Blvd	PM 15.61 BELLFLOWER Blvd	1,770	1,576	194	43.0
PM 15.61 BELLFLOWER Blvd	PM 16.95 JCT Rte 605	2,581	2,395	189	64.6
PM 16.95 JCT Rte 605	PM 18.10 PIONEER Blvd	4,883	5,523	315	148.2
PM 18.10 PIONEER Blvd	PM 19.17 BLOOMFIELD Ave	5,467	6,222	189	165.9
PM 19.17 BLOOMFIELD Ave	PM 20.45 CARMENITA Rd	5,174	5,876	567	159.2
PM 20.45 CARMENITA Rd	PM 20.74 LA/OC LINE	1,930	1,930	-	51.1
SUBTOTAL - MAINLINE		25,483	27,173	1,929	731.7
SUBTOTAL - EASTBOUND		13,600	12,950	630	346.6
SUBTOTAL - WESTBOUND		16,217	16,257	882	470.1
SUBTOTAL - CONNECTORS, FROM SHEET Q-10		3,523	3,523	-	93.2
TOTAL		58,823	59,903	3,441	1,642

SUMMARY OF QUANTITIES
Q-12

STATE OF CALIFORNIA - DEPARTMENT OF TRANSPORTATION
Caltrans® DESIGN
FUNCTIONAL SUPERVISOR M. OJI KALU
CALCULATED-DESIGNED BY VINCENT VALIDO
CHECKED BY LEWEN KUO
REVISED BY
DATE REVISED

LAST REVISION 6-5-15
DATE PLOTTED => 21-SEP-2015
TIME PLOTTED => 10:30

Dist	COUNTY	ROUTE	POST MILES TOTAL PROJECT	SHEET No.	TOTAL SHEETS
07	LA	91	R11.3/R20.7	114	192

REGISTERED ELECTRICAL ENGINEER 6-23-15 DATE

8-10-15
PLANS APPROVAL DATE

REGISTERED PROFESSIONAL ENGINEER
CESAR HERNANDEZ
No. E15805
Exp. 12-31-16
ELECTRICAL
STATE OF CALIFORNIA

THE STATE OF CALIFORNIA OR ITS OFFICERS OR AGENTS SHALL NOT BE RESPONSIBLE FOR THE ACCURACY OR COMPLETENESS OF SCANNED COPIES OF THIS PLAN SHEET.

EASTBOUND ROUTE 91 MAINLINE

No.	LOCATION	PM	SEE DETAIL A ON THIS SHEET FOR TYPICAL LOCATION OF INDUCTIVE LOOP DETECTOR							No. OF STUBOUTS (REPLACE)
			1	2	3	4	5	6	7	
1	EAST OF ROUTE 710	11.42	X	X	X	X				1
2	EAST OF ATLANTIC Ave	11.60	X	X	X	X	X	X		1
3	WEST OF ORANGE Ave	12.59	X	X	X	X	X	X		1
4	WEST OF CHERRY Ave	12.96	X	X	X	X	X			1
5	EAST OF CHERRY Ave	12.97	X	X	X	X	X			1
6	EAST OF UNION PACIFIC RAILROAD	13.45	X	X	X	X	X	X		1
7	EAST OF PARAMOUNT Ave	13.75	X	X	X	X				1
8	EAST OF DOWNEY Ave	13.97	X	X	X	X	X	X		1
9	WEST OF LAKEWOOD Ave	14.51	X	X	X	X	X			1
10	EAST OF LAKEWOOOD Ave	14.68	X	X	X	X	X			1
11	WEST OF BELLFLOWER Blvd	15.79	X	X	X	X	X	X		1
12	EAST OF BELLFLOWER Blvd	15.80	X	X	X	X	X	X		1
13	EAST OF WOODRUFF Ave	16.06	X	X	X	X	X	X	X	1
14	WEST OF ROUTE 605	17.00	X	X	X	X				1
15	EAST OF STUDEBAKER Rd	17.36	X	X	X	X	X	X		1
16	WEST OF PIONEER Blvd	17.88	X	X	X	X	X			1
17	EAST OF PIONEER Blvd	18.06	X	X	X	X	X			1
18	WEST OF NORWALK Blvd	18.49	X	X	X	X	X			1
19	EAST OF NORWALK Blvd	18.61	X	X	X	X	X			1
20	WEST OF BLOOMFIELD Ave	19.03	X	X	X	X	X			1
21	EAST OF ARTESIA Blvd	19.43	X	X	X	X	X			1
22	WEST OF SHOEMAKER Rd	19.79	X	X	X	X	X			1
23	WEST OF 183 St	20.16	X	X	X	X	X	X		1
24	EAST OF CARMENITA Rd	20.35	X	X	X	X	X			1

X - INSTALL TYPE E INDUCTIVE LOOP DETECTOR.

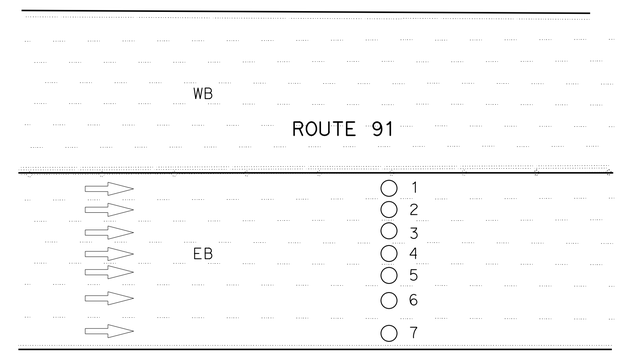

DETAIL A

TYPICAL INDUCTIVE LOOP DETECTOR CONFIGURATION (MAINLINE)

NOTES: (THIS SHEET)

1. PRIOR TO CONSTRUCTION, LOCATE ALL EXISTING INDUCTIVE LOOP DETECTORS.
2. ABANDON EXISTING INDUCTIVE LOOP DETECTORS. INSTALL INDUCTIVE LOOP DETECTORS AT THE SAME LOCATION.
3. SPLICE LOOP DETECTOR CONDUCTORS TO EXISTING DLC IN ADJACENT PULL BOX.
4. ABANDON EXISTING RIGHT HAND SIDE SHOULDER STUBOUTS. INSTALL 2" STUBOUT FOR INDUCTIVE LOOP DETECTORS.
5. TAG EXISTING DLC IN ADJACENT PULL BOX AND AT CONTROLLER CABINET.

APPROVED FOR ELECTRICAL WORK ONLY

INDUCTIVE LOOP DETECTOR

NO SCALE

E-1

STATE OF CALIFORNIA - DEPARTMENT OF TRANSPORTATION
Caltrans® TRAFFIC DESIGN

FUNCTIONAL SUPERVISOR: OSWALD ELIZONDO
CALCULATED-DESIGNED BY: Y. SHADROOZ
CHECKED BY: CESAR HERNANDEZ
REVISED BY
DATE REVISED

LAST REVISION 00-00-00 | DATE PLOTTED => 21-SEP-2015 | TIME PLOTTED => 10:30

Dist	COUNTY	ROUTE	POST MILES TOTAL PROJECT	SHEET No.	TOTAL SHEETS
07	LA	91	R11.3/R20.7	115	192

REGISTERED ELECTRICAL ENGINEER 6-23-15 DATE

8-10-15
PLANS APPROVAL DATE

REGISTERED PROFESSIONAL ENGINEER CESAR HERNANDEZ No. E15805 Exp. 12-31-16 ELECTRICAL STATE OF CALIFORNIA

THE STATE OF CALIFORNIA OR ITS OFFICERS OR AGENTS SHALL NOT BE RESPONSIBLE FOR THE ACCURACY OR COMPLETENESS OF SCANNED COPIES OF THIS PLAN SHEET.

WESTBOUND ROUTE 91 MAINLINE

No.	LOCATION	PM	SEE DETAIL A ON THIS SHEET FOR TYPICAL LOCATION OF INDUCTIVE LOOP DETECTOR						No. OF STUBOUTS (REPLACE)
			1	2	3	4	5	6	
25	EAST OF CARMENITA Rd	20.35	X	X	X	X	X		1
26	WEST OF 183 St	20.16	X	X	X	X	X		1
27	WEST OF SHOEMAKER Rd	19.79	X	X	X	X	X	X	1
28	EAST OF ARTESIA Blvd	19.43	X	X	X	X	X		1
29	WEST OF BLOOMFIELD Ave	19.03	X	X	X	X	X		1
30	EAST OF PIONEER Blvd	18.61	X	X	X	X	X		1
31	WEST OF PIONEER Blvd	18.49	X	X	X	X	X		1
32	EAST OF ROUTE 605	17.10	X	X	X	X			1
33	WEST OF ROUTE 605	17.00	X	X	X	X	X		1
34	EAST OF WOODRUFF Ave	16.06	X	X	X	X	X	X	1
35	EAST OF BELLFLOWER Blvd	15.80	X	X	X	X	X		1
36	WEST OF BELLFLOWER Blvd	15.79	X	X	X	X	X		1
37	EAST OF LAKEWOOD Blvd	14.68	X	X	X	X	X		1
38	WEST OF LAKEWOOD Blvd	14.51	X	X	X	X	X		1
39	WEST OF DOWNEY Ave	13.97	X	X	X	X	X		1
40	WEST OF PARAMOUNT Blvd	13.75	X	X	X	X	X	X	1
41	WEST OF CHERRY Ave	12.97	X	X	X	X	X	X	1
42	WEST OF ORANGE Ave	12.59	X	X	X	X	X	X	1
43	EAST OF ATLANTIC Ave	11.60	X	X	X	X	X	X	1
44	EAST OF ROUTE 710	11.42	X	X	X	X			1

X - INSTALL TYPE E INDUCTIVE LOOP DETECTOR.

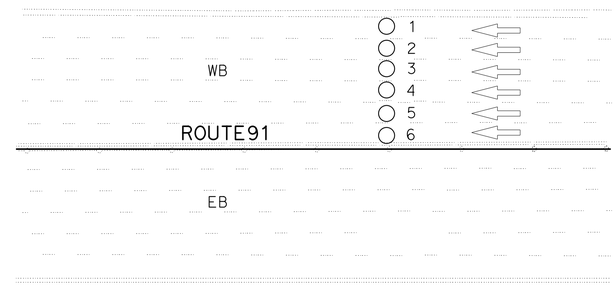

DETAIL A

TYPICAL INDUCTIVE LOOP DETECTOR CONFIGURATION (MAINLINE)

NOTES: (THIS SHEET)

1. PRIOR TO CONSTRUCTION, LOCATE ALL EXISTING INDUCTIVE LOOP DETECTORS.
2. ABANDON EXISTING INDUCTIVE LOOP DETECTORS. INSTALL INDUCTIVE LOOP DETECTORS AT THE SAME LOCATION.
3. SPLICE LOOP DETECTOR CONDUCTORS TO EXISTING DLC IN ADJACENT PULL BOX.
4. ABANDON EXISTING RIGHT HAND SIDE SHOULDER STUBOUTS. INSTALL 2" STUBOUT FOR INDUCTIVE LOOP DETECTORS.
5. TAG EXISTING DLC IN ADJACENT PULL BOX AND AT CONTROLLER CABINET.

INDUCTIVE LOOP DETECTOR

NO SCALE

APPROVED FOR ELECTRICAL WORK ONLY

E-2

STATE OF CALIFORNIA - DEPARTMENT OF TRANSPORTATION
Caltrans® TRAFFIC DESIGN

FUNCTIONAL SUPERVISOR: OSWALD ELIZONDO
CALCULATED-DESIGNED BY: Y. SHADROOZ
CHECKED BY: CESAR HERNANDEZ
REVISED BY
DATE REVISED

LAST REVISION 00-00-00 | DATE PLOTTED => 21-SEP-2015 | TIME PLOTTED => 10:30

Dist	COUNTY	ROUTE	POST MILES TOTAL PROJECT	SHEET No.	TOTAL SHEETS
07	LA	91	R11.3/R20.7	116	192

REGISTERED ELECTRICAL ENGINEER 6-23-15 DATE

8-10-15
PLANS APPROVAL DATE

REGISTERED PROFESSIONAL ENGINEER CESAR HERNANDEZ No. E15805 Exp. 12-31-16 ELECTRICAL STATE OF CALIFORNIA

THE STATE OF CALIFORNIA OR ITS OFFICERS OR AGENTS SHALL NOT BE RESPONSIBLE FOR THE ACCURACY OR COMPLETENESS OF SCANNED COPIES OF THIS PLAN SHEET.

NOTES: (THIS SHEET)

1. PRIOR TO CONSTRUCTION, LOCATE ALL EXISTING INDUCTIVE LOOP DETECTORS.
2. ABANDON EXISTING INDUCTIVE LOOP DETECTORS. INSTALL INDUCTIVE LOOP DETECTORS AT THE SAME LOCATION.
3. SPLICE LOOP DETECTOR CONDUCTORS TO EXISTING DLC IN ADJACENT PULL BOX.
4. ABANDON EXISTING STUBOUTS. INSTALL 2"C STUBOUTS FOR INDUCTIVE LOOP DETECTORS.
5. TAG EXISTING DLC IN ADJACENT PULL BOX AND AT CONTROLLER CABINET.

RAMP LOCATIONS

RAMP No.	DESCRIPTION		SEE DETAILS A, B and C ON SHEET E-5 FOR TYPICAL LOCATION OF THE INDUCTIVE LOOP DETECTORS																																									No. OF STUBOUTS (REPLACE)
			1	2	3	4	5	6	7	8	9	10	11	12	13	14	15	16	17	18	19	20	21	22	23	24	25	26	27	28	29	30	31	32	33	34	35	36	37	38	39	40	41	
1	WB 91	ATLANTIC Ave ON-RAMP																	X																									1
2	WB 91	ATLANTIC Ave OFF-RAMP		X	X	X	X	X	X																																			2
3	EB 91	ATLANTIC Ave ON-RAMP																	X	X	X	X	X	X	X	X	X	X		X														3
4	EB 91	ATLANTIC Ave OFF-RAMP		X	X	X	X	X	X																																			2
5	WB 91	CHERRY Ave ON-RAMP																	X	X	X	X	X	X	X	X	X	X	X	X														4
6	WB 91	CHERRY Ave OFF-RAMP	X	X	X	X																																						2
7	EB 91	CHERRY Ave ON-RAMP																	X	X	X	X	X	X	X	X	X	X		X														4
8	EB 91	CHERRY Ave OFF-RAMP	X	X	X	X																																						2
9	WB 91	PARAMOUNT Blvd ON-RAMP																	X	X	X	X	X	X	X	X	X	X		X														4
10	WB 91	PARAMOUNT Blvd OFF-RAMP	X																																									1
11	EB 91	PARAMOUNT Blvd ON-RAMP																	X	X	X	X	X	X	X	X	X	X		X														3
12	EB 91	PARAMOUNT Blvd OFF-RAMP	X																																									3
13	WB 91	DOWNEY Ave ON-RAMP																		X	X	X	X	X	X	X	X	X	X	X														4
14	WB 91	DOWNEY Ave OFF-RAMP	X																																									1
15	EB 91	DOWNEY Ave ON-RAMP																	X	X	X	X	X	X	X	X	X	X		X														4
16	EB 91	DOWNEY Ave OFF-RAMP	X				X	X																																				2
17	WB 91	SB LAKEWOOD Blvd ON-RAMP																	X	X	X	X	X	X	X	X	X	X		X														5
18	WB 91	NB LAKEWOOD Blvd ON-RAMP																													X	X	X	X	X	X	X	X	X	X	X			3
19	EB 91	SB LAKEWOOD Blvd ON-RAMP																													X	X	X	X	X	X	X	X	X	X	X			3
20	EB 91	NB LAKEWOOD Blvd ON-RAMP																		X	X	X	X	X	X	X	X	X	X	X														3
21	EB 91	LAKEWOOD Blvd OFF-RAMP		X	X																																							1
22	WB 91	CLARK Ave OFF-RAMP		X	X					X	X		X	X		B	B																											1
23	EB 91	CLARK Ave ON-RAMP																	X	X	X	X	X	X	X	X	X	X	X	X														3

X - INSTALL TYPE E LOOP DETECTOR.
B - INSTALL TYPE D LOOP DETECTOR.

APPROVED FOR ELECTRICAL WORK ONLY

INDUCTIVE LOOP DETECTOR

E-3

STATE OF CALIFORNIA - DEPARTMENT OF TRANSPORTATION
Caltrans® TRAFFIC DESIGN

FUNCTIONAL SUPERVISOR: OSWALD ELIZONDO
CALCULATED-DESIGNED BY: Y. SHADROOZ
CHECKED BY: CESAR HERNANDEZ
REVISED BY / DATE REVISED

LAST REVISION 00-00-00
DATE PLOTTED => 21-SEP-2015
TIME PLOTTED => 10:30

Dist	COUNTY	ROUTE	POST MILES TOTAL PROJECT	SHEET No.	TOTAL SHEETS
07	LA	91	R11.3/R20.7	117	192

REGISTERED ELECTRICAL ENGINEER 6-23-15 DATE

8-10-15
PLANS APPROVAL DATE

REGISTERED PROFESSIONAL ENGINEER CESAR HERNANDEZ No. E15805 Exp. 12-31-16 ELECTRICAL STATE OF CALIFORNIA

THE STATE OF CALIFORNIA OR ITS OFFICERS OR AGENTS SHALL NOT BE RESPONSIBLE FOR THE ACCURACY OR COMPLETENESS OF SCANNED COPIES OF THIS PLAN SHEET.

NOTES: (THIS SHEET)

1. PRIOR TO CONSTRUCTION, LOCATE ALL EXISTING INDUCTIVE LOOP DETECTORS.
2. ABANDON EXISTING INDUCTIVE LOOP DETECTORS. INSTALL INDUCTIVE LOOP DETECTORS AT THE SAME LOCATION.
3. SPLICE LOOP DETECTOR CONDUCTORS TO EXISTING DLC IN ADJACENT PULL BOX.
4. ABANDON EXISTING STUBOUTS. INSTALL 2"C STUBOUTS FOR INDUCTIVE LOOP DETECTORS.
5. TAG EXISTING DLC IN ADJACENT PULL BOX AND AT CONTROLLER CABINET.

RAMP LOCATIONS

RAMP No.	DESCRIPTION		SEE DETAILS A, B and C ON SHEET E-5 FOR TYPICAL LOCATION OF THE INDUCTIVE LOOP DETECTORS																																											No. OF STUBOUTS (REPLACE)
			1	2	3	4	5	6	7	8	9	10	11	12	13	14	15	16	17	18	19	20	21	22	23	24	25	26	27	28	29	30	31	32	33	34	35	36	37	38	39	40	41	
25	WB 91	BELLFLOWER Blvd ON-RAMP																	X	X	X	X	X	X	X	X	X	X		X															4
26	WB 91	BELLFLOWER Blvd OFF-RAMP	X	X	X	X	X	X		X	X		X	X		B	B																												4
27	EB 91	BELLFLOWER Blvd ON-RAMP																	X		X	X	X	X	X	X	X	X	X	X															4
28	EB 91	BELLFLOWER Blvd OFF-RAMP	X	X	X		X	X		X	X	X	X	X	X	B	B	B																											3
29	WB 91	STUDEBAKER Rd OFF-RAMP		X			X	X																																					2
30	EB 91	STUDEBAKER Rd ON-RAMP																	X	X	X	X	X	X	X	X	X	X	X	X															3
31	WB 91	SB PIONEER Blvd ON-RAMP																	X	X	X	X	X	X	X	X	X	X	X	X															4
32	WB 91	NB PIONEER Blvd ON-RAMP																													X			X		X		X		X					2
33	EB 91	SB PIONEER Blvd ON-RAMP																													X			X		X		X		X					2
34	EB 91	NB PIONEER Blvd ON-RAMP																	X		X		X		X		X			X															3
35	EB 91	PIONEER Blvd OFF-RAMP								X	X		X	X		B	B																												1
36	WB 91	SB NORWALK Blvd ON-RAMP																	X		X		X		X		X			X															3
37	WB 91	NB NORWALK Blvd ON-RAMP																													X		X		X		X			X			X		3
38	WB 91	NORWALK Blvd OFF-RAMP		X	X																																								2
39	EB 91	SB NORWALK Blvd ON-RAMP																													X			X		X		X		X			X		3
40	EB 91	NB NORWALK Blvd ON-RAMP																		X	X		X		X		X			X															3
41	EB 91	NORWALK Blvd OFF-RAMP	X				X	X																																					1
42	WB 91	BLOOMFIELD Ave ON-RAMP																		X	X	X	X	X	X	X	X	X		X															4
43	EB 91	BLOOMFIELD Ave OFF-RAMP	X																																										1
44	WB 91	ARTESIA Blvd ON-RAMP																	X	X	X	X	X	X	X	X	X	X	X																2
45	WB 91	ARTESIA Blvd OFF-RAMP					X	X		X	X		X	X		B	B																												3
46	EB 91	PARK PLAZA Dr ON-RAMP																															X	X	X	X	X	X	X	X		X	X		3
47	EB 91	PARK PLAZA Dr OFF-RAMP		X	X																																								1
48	WB 91	183RD St ON-RAMP																		X	X	X	X	X	X	X	X	X		X															3
49	WB 91	CARMENITA Rd OFF-RAMP	X							X	X		X	X		B	B																												2
50	EB 91	CARMENITA Rd OFF-RAMP								X	X		X	X		B	B																												1

X - INSTALL TYPE E LOOP DETECTOR.
B - INSTALL TYPE D LOOP DETECTOR.

APPROVED FOR ELECTRICAL WORK ONLY

INDUCTIVE LOOP DETECTOR

E-4

REVISED BY | DATE REVISED
Y. SHADROOZ | CESAR HERNANDEZ
CALCULATED-DESIGNED BY | CHECKED BY
FUNCTIONAL SUPERVISOR
OSWALD ELIZONDO

STATE OF CALIFORNIA - DEPARTMENT OF TRANSPORTATION
Caltrans® TRAFFIC DESIGN

LAST REVISION 00-00-00 | DATE PLOTTED => 21-SEP-2015 | TIME PLOTTED => 10:30

Dist	COUNTY	ROUTE	POST MILES TOTAL PROJECT	SHEET No.	TOTAL SHEETS
07	LA	91	R11.3/R20.7	118	192

REGISTERED ELECTRICAL ENGINEER 6-23-15 DATE

8-10-15
PLANS APPROVAL DATE

REGISTERED PROFESSIONAL ENGINEER CESAR HERNANDEZ No. E15805 Exp. 12-31-16 ELECTRICAL STATE OF CALIFORNIA

THE STATE OF CALIFORNIA OR ITS OFFICERS OR AGENTS SHALL NOT BE RESPONSIBLE FOR THE ACCURACY OR COMPLETENESS OF SCANNED COPIES OF THIS PLAN SHEET.

NOTES: (THIS SHEET)

1. PRIOR TO CONSTRUCTION, LOCATE ALL EXISTING INDUCTIVE LOOP DETECTORS.
2. ABANDON EXISTING INDUCTIVE LOOP DETECTORS. INSTALL INDUCTIVE LOOP DETECTORS AT THE SAME LOCATION.
3. SPLICE LOOP DETECTOR CONDUCTORS TO EXISTING DLC IN ADJACENT PULL BOX.
4. ABANDON EXISTING STUBOUTS. INSTALL 2" STUBOUT FOR INDUCTIVE LOOP DETECTORS.
5. TAG EXISTING DLC IN ADJACENT PULL BOX AND AT CONTROLLER CABINET.

CONNECTOR LOCATIONS

DESCRIPTION	SEE DETAIL D ON THIS SHEET FOR TYPICAL LOCATION OF THE INDUCTIVE LOOP DETECTORS			No. OF STUBOUTS (REPLACE)
	42	43	44	
WB ROUTE 91 TO NB ROUTE 605 Conn	X			1
WB ROUTE 91 TO SB ROUTE 605 Conn		X	X	1

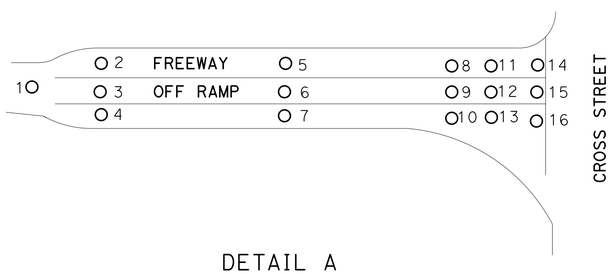

DETAIL A
TYPICAL LOCATION OF THE OFF-RAMP LOOP DETECTORS

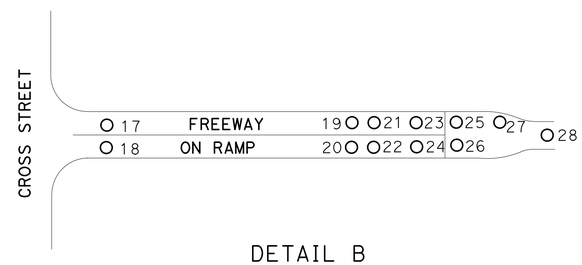

DETAIL B
TYPICAL LOCATION OF THE ON-RAMP LOOP DETECTORS

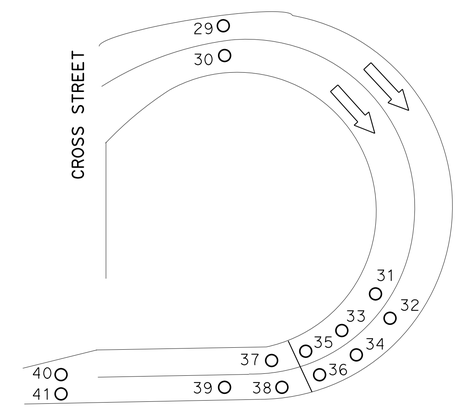

DETAIL C
TYPICAL LOCATION OF THE ON-RAMP LOOP DETECTORS

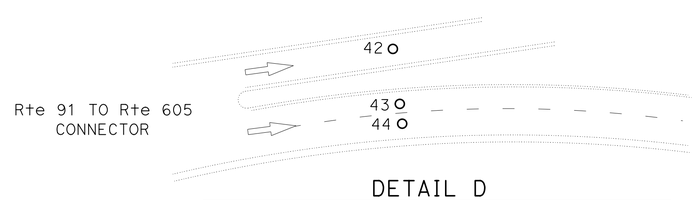

DETAIL D
TYPICAL LOCATION OF CONNECTOR LOOP DETECTORS

INDUCTIVE LOOP DETECTOR

NO SCALE

E-5

STATE OF CALIFORNIA - DEPARTMENT OF TRANSPORTATION
Caltrans® TRAFFIC DESIGN

FUNCTIONAL SUPERVISOR: OSWALD ELIZONDO
CALCULATED-DESIGNED BY: Y. SHADROOZ
CHECKED BY: CESAR HERNANDEZ
REVISED BY
DATE REVISED

LAST REVISION 00-00-00
DATE PLOTTED => 21-SEP-2015
TIME PLOTTED => 10:30

Dist	COUNTY	ROUTE	POST MILES TOTAL PROJECT	SHEET No.	TOTAL SHEETS
07	LA	91	R11.3/R20.7	119	192

REGISTERED ELECTRICAL ENGINEER 6-23-15 DATE

8-10-15
PLANS APPROVAL DATE

REGISTERED PROFESSIONAL ENGINEER
CESAR HERNANDEZ
No. E15805
Exp. 12-31-16
ELECTRICAL
STATE OF CALIFORNIA

THE STATE OF CALIFORNIA OR ITS OFFICERS OR AGENTS SHALL NOT BE RESPONSIBLE FOR THE ACCURACY OR COMPLETENESS OF SCANNED COPIES OF THIS PLAN SHEET.

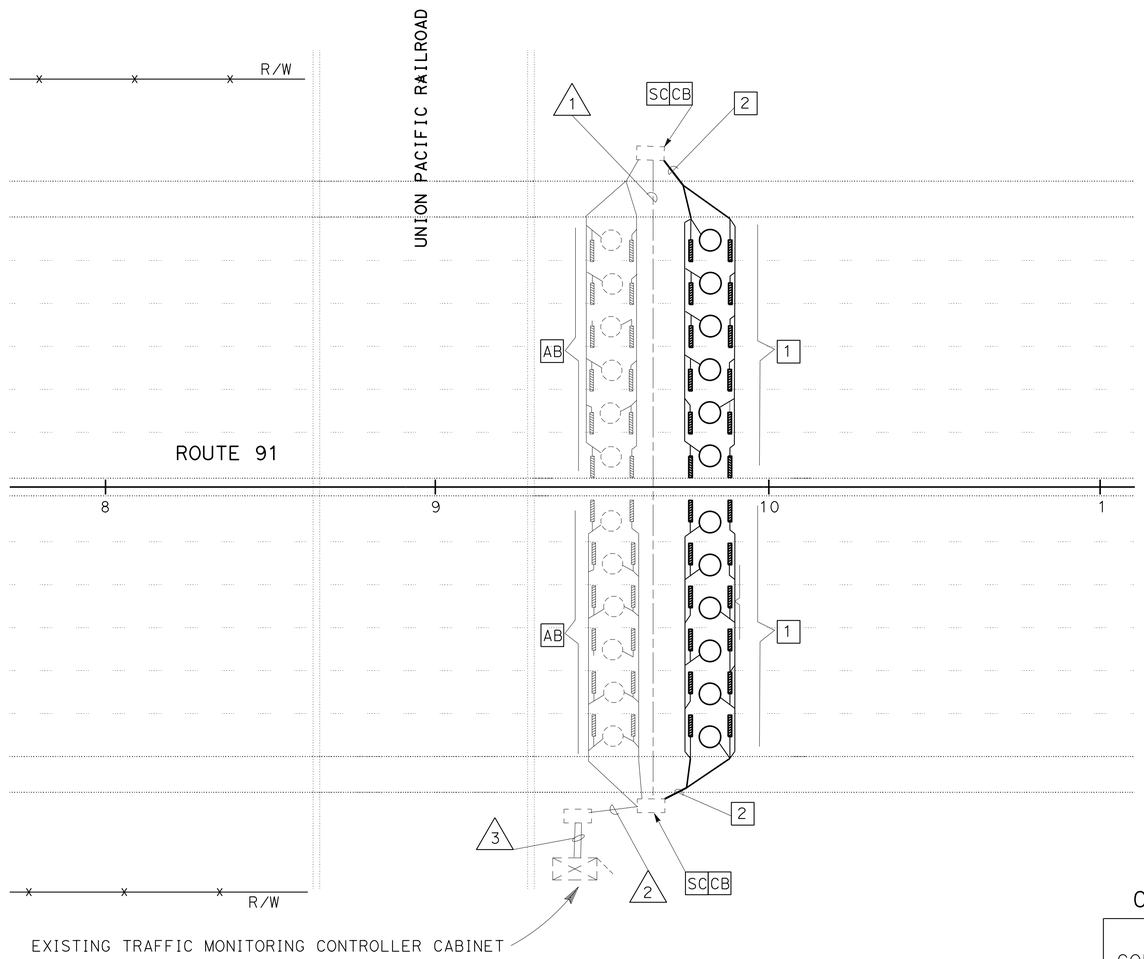

CONDUCTOR AND CONDUIT SCHEDULE (THIS SHEET ONLY)

CONDUCTOR TYPE	FUNCTION	RUN 1	RUN 2	RUN 3
6PR22 CABLE	DISTRIBUTION DATA/VOICE			1
DLC	DETECTOR LEAD IN CABLE	6	12	12
STC	SCREENED TRANSMISSION CABLE	12	24	24
	CONDUIT SIZE	4"	2"	2-3"

CONDUIT AND CONDUCTORS ARE EXISTING UNLESS OTHERWISE NOTED

LEGEND: (THIS SHEET)

1. INSTALL 12 INDUCTIVE LOOP DETECTOR, 24 AXLE SENSORS. SEE SHEET E-7 FOR INSTALLATION DETAILS.
2. INSTALL 2" STUBOUT FOR LOOP DETECTORS AND PIEZO SENSORS.

NOTE: (THIS SHEET)

1. TAG EXISTING DLC IN ADJACENT PULL BOX AND AT CONTROLLER CABINET.

MODIFY AUTOMATIC VEHICLE CLASSIFICATION STATION

NO SCALE

APPROVED FOR ELECTRICAL WORK ONLY

E-6

REVISED BY | DATE REVISED
Y. SHADROOZ | CESAR HERNANDEZ
CALCULATED-DESIGNED BY | CHECKED BY
FUNCTIONAL SUPERVISOR: OSWALD ELIZONDO
STATE OF CALIFORNIA - DEPARTMENT OF TRANSPORTATION
Caltrans® TRAFFIC DESIGN

LAST REVISION 00-00-00 | DATE PLOTTED => 21-SEP-2015 | TIME PLOTTED => 10:30

Dist	COUNTY	ROUTE	POST MILES TOTAL PROJECT	SHEET No.	TOTAL SHEETS
07	LA	91	R11.3/R20.7	120	192

REGISTERED ELECTRICAL ENGINEER 6-23-15 DATE

8-10-15
PLANS APPROVAL DATE

REGISTERED PROFESSIONAL ENGINEER CESAR HERNANDEZ No. E15805 Exp. 12-31-16 ELECTRICAL STATE OF CALIFORNIA

THE STATE OF CALIFORNIA OR ITS OFFICERS OR AGENTS SHALL NOT BE RESPONSIBLE FOR THE ACCURACY OR COMPLETENESS OF SCANNED COPIES OF THIS PLAN SHEET.

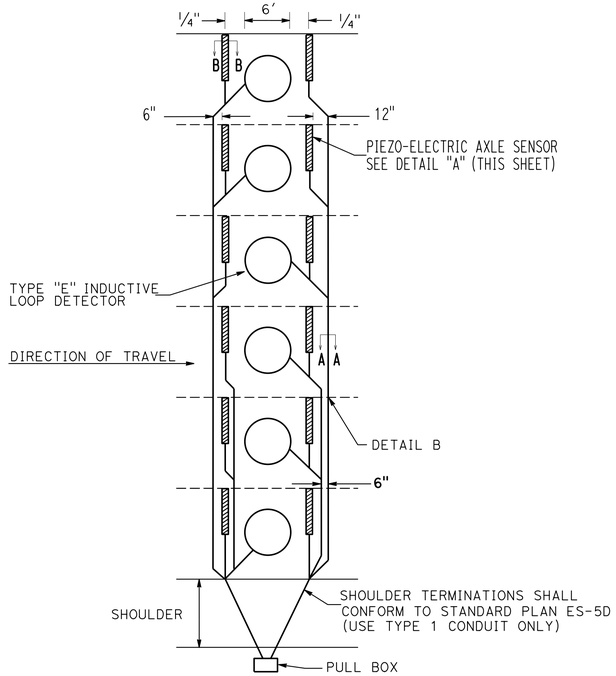

TYPICAL AXLE SENSOR INSTALLATION

NO SCALE

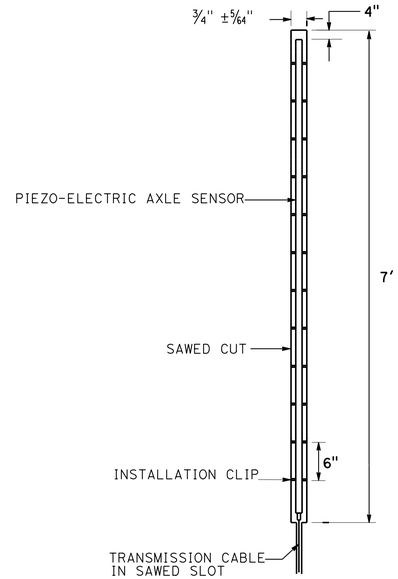

DETAIL "A"

NO SCALE

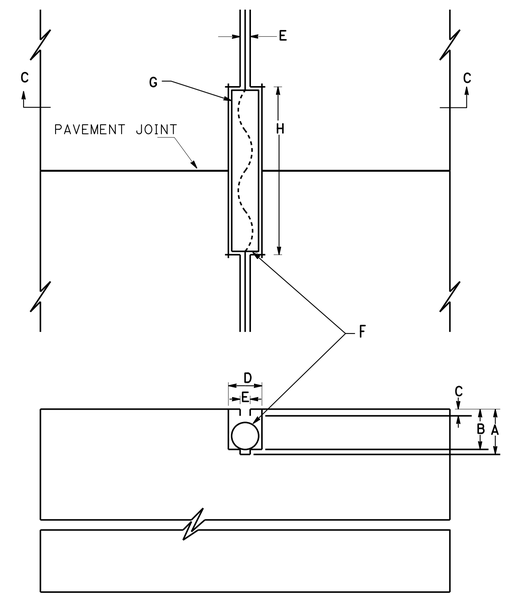

SECTION C-C

DETAIL "B" (TYPICAL LEAD-IN AT PAVEMENT JOINT)

NO SCALE

A. SAW-CUT DEPTH TO ACCOMODATE SPECIFIED NUMBER OF CONDUCTORS WITH A MINIMUM OF 1" FROM TOP OF WIRE TO PAVEMENT SURFACE (3 1/4" Max).

B. SLOT SAW-CUT DEPTH TO ACCOMODATE 1" TYPE 3 CONDUIT WITH 1/2" MINIMUM FROM TOP OF CONDUIT TO PAVEMENT SURFACE.

C. 1/2" MINIMUM BETWEEN TOP OF CONDUIT AND PAVEMENT SURFACE.

D. SAW-CUT WIDTH TO ACCOMODATE 1" TYPE 3 CONDUIT WITH 1/8" CLEARANCE.

E. SAW-CUT 3/8" WIDE (Max.).

F. 1" TYPE 3 CONDUIT, 6" LONG. PLUG BOTH ENDS WITH CAULKING COMPOUND TO KEEP OUT EPOXY.

G. CONDUCTORS WITH 1/2" MINIMUM SLACK INSIDE CONDUIT.

H. SAW-CUT LENGTH OF SLOT 1/8" LONGER THAN CONDUIT.

AXLE SENSOR INSTALLATION PROCEDURE

1. MARK THE POSITION OF THE AXLE SENSORS AS DIRECTED BY THE ENGINEER. AXLE SENSOR CHANNELS MUST BE PERPENDICULAR TO TRAFFIC.
2. MARK THE POSITION OF THE LOOP DETECTORS. THE DETECTORS MUST BE CENTERED IN THE LANE AND BETWEEN THE AXLE SENSORS.
3. MARK THE HOME RUN CUTS AS SHOWN IN THE AXLE SENSOR INSTALLATION DETAIL.
4. USING A CONCRETE SAW-CUT THE AXLE SENSOR CHANNELS 3/4" WIDE BY 1" DEEP IN A SINGLE PASS. CUTS SHALL BE STRAIGHT AND TRUE.
5. CUT THE LOOP DETECTORS AND HOME RUNS.
6. DRILL 1/2" HOLES, 1" DEEP, AT A 45 DEGREE ANGLE AT THE BOTTOM CORNERS OF EACH CHANNEL. HOLES MUST BE 12" APART AND ON ALTERNATING SIDES OF THE CHANNEL.
7. WASH OUT THE CHANNELS AND ALL SAW CUTS THOROUGHLY WITH HIGH PRESSURE WATER. DRY COMPLETELY WITH AN AIR COMPRESSOR. IN PCC PAVEMENT ONLY, WIPE OUT THE CHANNELS WITH LACQUER THINNER AND CLEAN COTTON RAGS.
8. PLACE 4" DUCT TAPE STRIPS ON THE PAVEMENT AROUND THE CHANNELS.
9. ENSURE THAT EACH SENSOR IS STRAIGHT AND FLAT. BEND EACH END DOWN SLIGHTLY AND PLACE THE INSTALLATION CLIPS ON THE SENSOR.
10. BLOCK OFF THE CABLE END OF THE CHANNEL WITH DUCT SEAL TO PREVENT EPOXY THE GROUT FLOWING OUT OF THE CHANNEL.
11. PRE-MIX THE EPOXY GROUT UNTIL A UNIFORM CONSISTENCY IS OBTAINED, A MINIMUM OF 4 MINUTES, SCRAPING BOTH THE SIDES AND BOTTOM OF THE CONTAINER. ADD THE HARDENER POWDER AND MIX FOR 1 MINUTE.
12. WHILE WEARING PROTECTIVE GLOVES, HALF FILL THE CHANNEL WITH EPOXY GROUT. ENSURE THAT THE BOTTOM OF THE CHANNEL IS COMPLETELY COVERED, AND THAT THE HOLES DRILLED IN STEP 6 ARE FILLED.
13. PLACE THE SENSOR IN THE CHANNEL WITH THE BRASS ELEMENT 3/8" BELOW THE ROAD SURFACE, WITH NO VOIDS BENEATH THE SENSOR.
14. COMPLETELY FILL THE CHANNEL WITH EPOXY GROUT. SMOOTH OUT THE EPOXY GROUT ON TOP OF THE SENSOR TO ROAD LEVEL, WITH NO TROUGH ON TOP.
15. WHEN EPOXY GROUT HAS BEGUN TO SET, REMOVE THE DUCT TAPE FROM THE PAVEMENT. REMOVE THE DUCT SEAL FROM THE END OF THE CHANNEL.
16. INSTALL THE LOOP DETECTORS.
17. INSTALL ALL LEAD-IN CABLES IN THE HOME RUN SLOTS, INSTALLING TYPE 3 CONDUIT AT THE EXPANSION JOINT CROSSINGS. PULL CABLES THROUGH STUB-OUT CONDUIT AND COIL IN PULL BOX.
18. SEAL ALL SAW-CUTS. ELASTOMERIC SEALANT ONLY MUST BE USED IN ALL CUTS CONTAINING SCREENED TRANSMISSION CABLE.
19. REMOVE ANY HIGH SPOTS IN THE EPOXY GROUT WITH A HAND GRINDER.
20. CLEAN UP THE SITE. WHEN ALL EPOXY GROUT AND SEALANTS ARE COMPLETELY CURED, LANES MAY BE OPENED TO TRAFFIC.

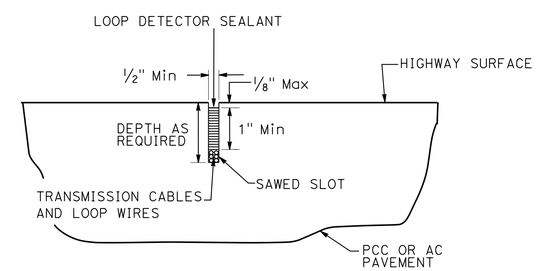

SECTION A-A

NO SCALE

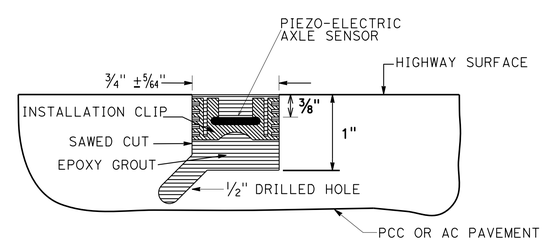

SECTION B-B

NO SCALE

ELECTRICAL DETAILS

NO SCALE

E-7

STATE OF CALIFORNIA - DEPARTMENT OF TRANSPORTATION
Caltrans® TRAFFIC DESIGN

FUNCTIONAL SUPERVISOR: OSWALD ELIZONDO
CALCULATED-DESIGNED BY: Y. SHADROOZ
CHECKED BY: CESAR HERNANDEZ
REVISED BY
DATE REVISED

LAST REVISION 00-00-00
DATE PLOTTED => 21-SEP-2015
TIME PLOTTED => 10:30

Dist	COUNTY	ROUTE	POST MILES TOTAL PROJECT	SHEET No.	TOTAL SHEETS
07	LA	91	R11.3/R20.7	121	192

REGISTERED ELECTRICAL ENGINEER 6-23-15 DATE

8-10-15
PLANS APPROVAL DATE

REGISTERED PROFESSIONAL ENGINEER CESAR HERNANDEZ No. E15805 Exp. 12-31-16 ELECTRICAL STATE OF CALIFORNIA

THE STATE OF CALIFORNIA OR ITS OFFICERS OR AGENTS SHALL NOT BE RESPONSIBLE FOR THE ACCURACY OR COMPLETENESS OF SCANNED COPIES OF THIS PLAN SHEET.

NOTE:

FOR ACCURATE RIGHT OF WAY DATA, CONTACT RIGHT OF WAY ENGINEERING AT THE DISTRICT OFFICE.

LEGEND: (THIS SHEET)

1 AB 2" CONDUIT, RL EXISTING SIC TO NEW CONDUIT. SEE CONDUIT AND CONDUCTOR SCHEDULE.

2 RC 250 W HPS Lum AND INSTALL 235 W LED.

3 RC Lum, INSTALL 165 W LED.

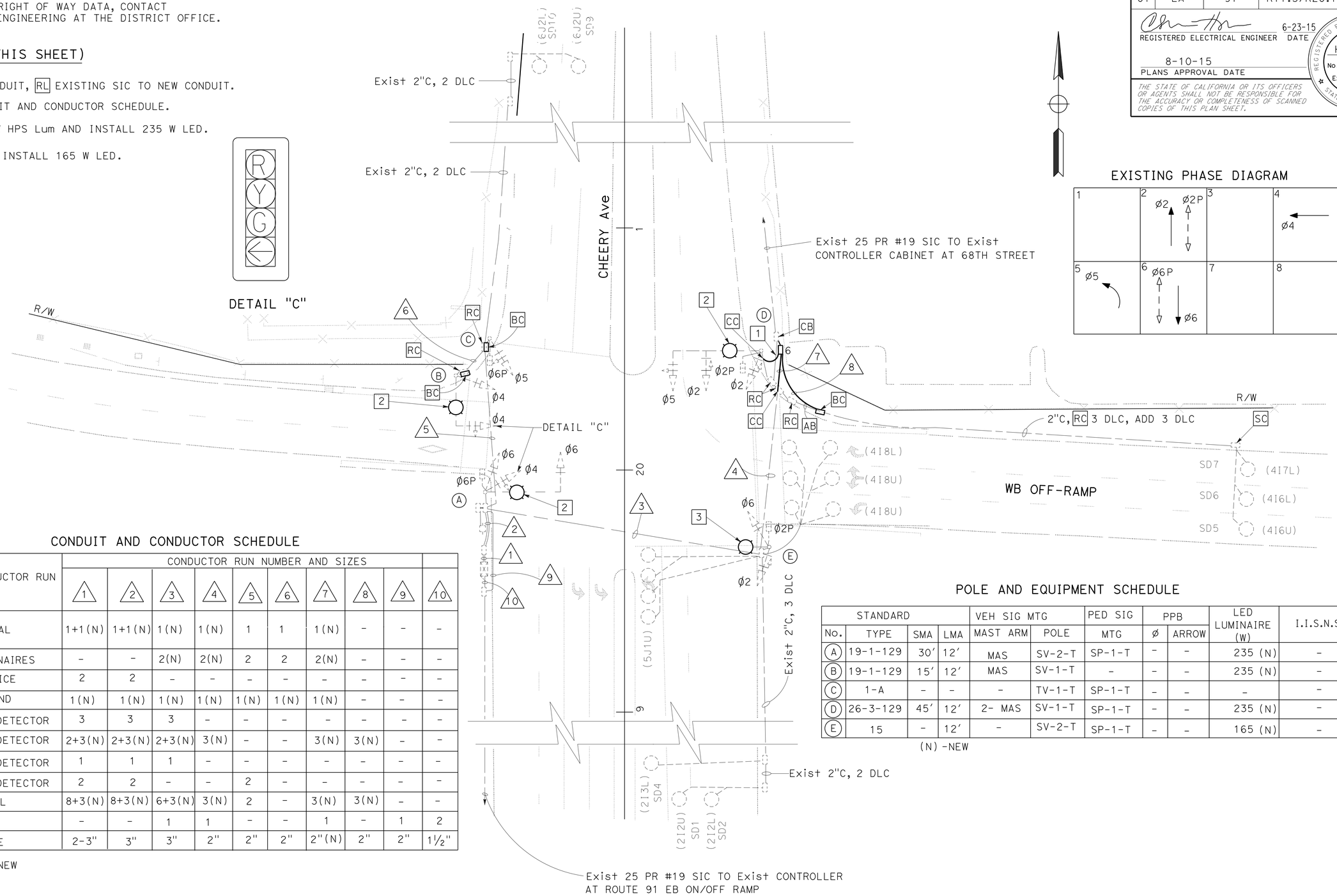

EXISTING PHASE DIAGRAM

1	2	3	4
	Ø2 Ø2P		Ø4
5	6	7	8
Ø5	Ø6P Ø6		

CONDUIT AND CONDUCTOR SCHEDULE

AWG OR CABLE	CONDUCTOR RUN	CONDUCTOR RUN NUMBER AND SIZES									
		1	2	3	4	5	6	7	8	9	10
28CSC	SIGNAL	1+1(N)	1+1(N)	1(N)	1(N)	1	1	1(N)	-	-	-
#10	LUMINAIRES	-	-	2(N)	2(N)	2	2	2(N)	-	-	-
#8	SERVICE	2	2	-	-	-	-	-	-	-	-
#6	GROUND	1(N)	1(N)	1(N)	1(N)	1(N)	1(N)	1(N)	-	-	-
DLC	Ø2 DETECTOR	3	3	3	-	-	-	-	-	-	-
	Ø4 DETECTOR	2+3(N)	2+3(N)	2+3(N)	3(N)	-	-	3(N)	3(N)	-	-
	Ø5 DETECTOR	1	1	1	-	-	-	-	-	-	-
	Ø6 DETECTOR	2	2	-	-	2	-	-	-	-	-
	TOTAL	8+3(N)	8+3(N)	6+3(N)	3(N)	2	-	3(N)	3(N)	-	-
25 PAIR #19	SIC	-	-	1	1	-	-	1	-	1	2
CONDUIT SIZE		2-3"	3"	3"	2"	2"	2"	2"(N)	2"	2"	1½"

(N) NEW

POLE AND EQUIPMENT SCHEDULE

STANDARD				VEH SIG MTG		PED SIG	PPB		LED LUMINAIRE (W)	I.I.S.N.S
No.	TYPE	SMA	LMA	MAST ARM	POLE	MTG	Ø	ARROW		
A	19-1-129	30′	12′	MAS	SV-2-T	SP-1-T	-	-	235 (N)	-
B	19-1-129	15′	12′	MAS	SV-1-T	-	-	-	235 (N)	-
C	1-A	-	-	-	TV-1-T	SP-1-T	-	-	-	-
D	26-3-129	45′	12′	2- MAS	SV-1-T	SP-1-T	-	-	235 (N)	-
E	15	-	12′	-	SV-2-T	SP-1-T	-	-	165 (N)	-

(N) -NEW

MODIFY SIGNAL AND LIGHTING

SCALE: 1" = 20′

APPROVED FOR ELECTRICAL WORK ONLY

E-8

REVISED BY | DATE REVISED
KENNY NGUYEN | CESAR HERNANDEZ
CALCULATED-DESIGNED BY | CHECKED BY
FUNCTIONAL SUPERVISOR: OSWALD ELIZONDO
STATE OF CALIFORNIA - DEPARTMENT OF TRANSPORTATION
Caltrans TRAFFIC DESIGN

LAST REVISION 00-00-00 | DATE PLOTTED => 21-SEP-2015 | TIME PLOTTED => 10:30

Dist	COUNTY	ROUTE	POST MILES TOTAL PROJECT	SHEET No.	TOTAL SHEETS
07	LA	91	R11.3/R20.7	122	192

REGISTERED ELECTRICAL ENGINEER 6-23-15 DATE

8-10-15
PLANS APPROVAL DATE

REGISTERED PROFESSIONAL ENGINEER CESAR HERNANDEZ No. E15805 Exp. 12-31-16 ELECTRICAL STATE OF CALIFORNIA

THE STATE OF CALIFORNIA OR ITS OFFICERS OR AGENTS SHALL NOT BE RESPONSIBLE FOR THE ACCURACY OR COMPLETENESS OF SCANNED COPIES OF THIS PLAN SHEET.

NOTE:

FOR ACCURATE RIGHT OF WAY DATA, CONTACT RIGHT OF WAY ENGINEERING AT THE DISTRICT OFFICE.

CONDUIT AND CONDUCTOR SCHEDULE

AWG OR CABLE	CONDUCTOR RUN	1	2	3	4	5
#28CSC	SIGNAL	2(N)	2	1	1	1
#10	LUMINAIRES	-	2	2	2	-
#6	SIGNAL SERVICE	2(N)	-	-	-	-
#8	GROUND	1(N)	-	-	-	-
DLC	Ø1 DETECTOR	1	1	-	-	-
	Ø2 DETECTOR	2				
	Ø4 DETECTOR	2	1	-	-	-
	Ø6 DETECTOR	2	2	-	-	-
12 PR #19	SIC	2	-	-	-	-
CONDUIT SIZE		2-3" (N)	3"	3"	3"	3"

(N) NEW

POLE AND EQUIPMENT SCHEDULE

NO.	STANDARD			VEH SIG M+g		PED SIGNAL	PPB		LED LUMINAIRE (W)	SPECIAL REQUIREMENTS
	TYPE	SMA	LMA	MAST ARM	POLE	M+g	Ø	ARROW		
A	26-4-70	40′	12	2-MAT	SV-1-T	SP-1-T	6	←	165 (N)	TYPE IV PEC
B	15	—	12	—	SV-2-T	SP-1-T	6	→	165 (N)	TYPE IV PEC
C	17-1-70	20′	12′	MAT	SV-2-T	SP-1-T	2	←	165 (N)	TYPE IV PEC
D	15	—	12′	—	SV-1-T	—	2	←	165 (N)	TYPE IV PEC
E	1-A				TV-1-T	SP-1-T				

(N) NEW

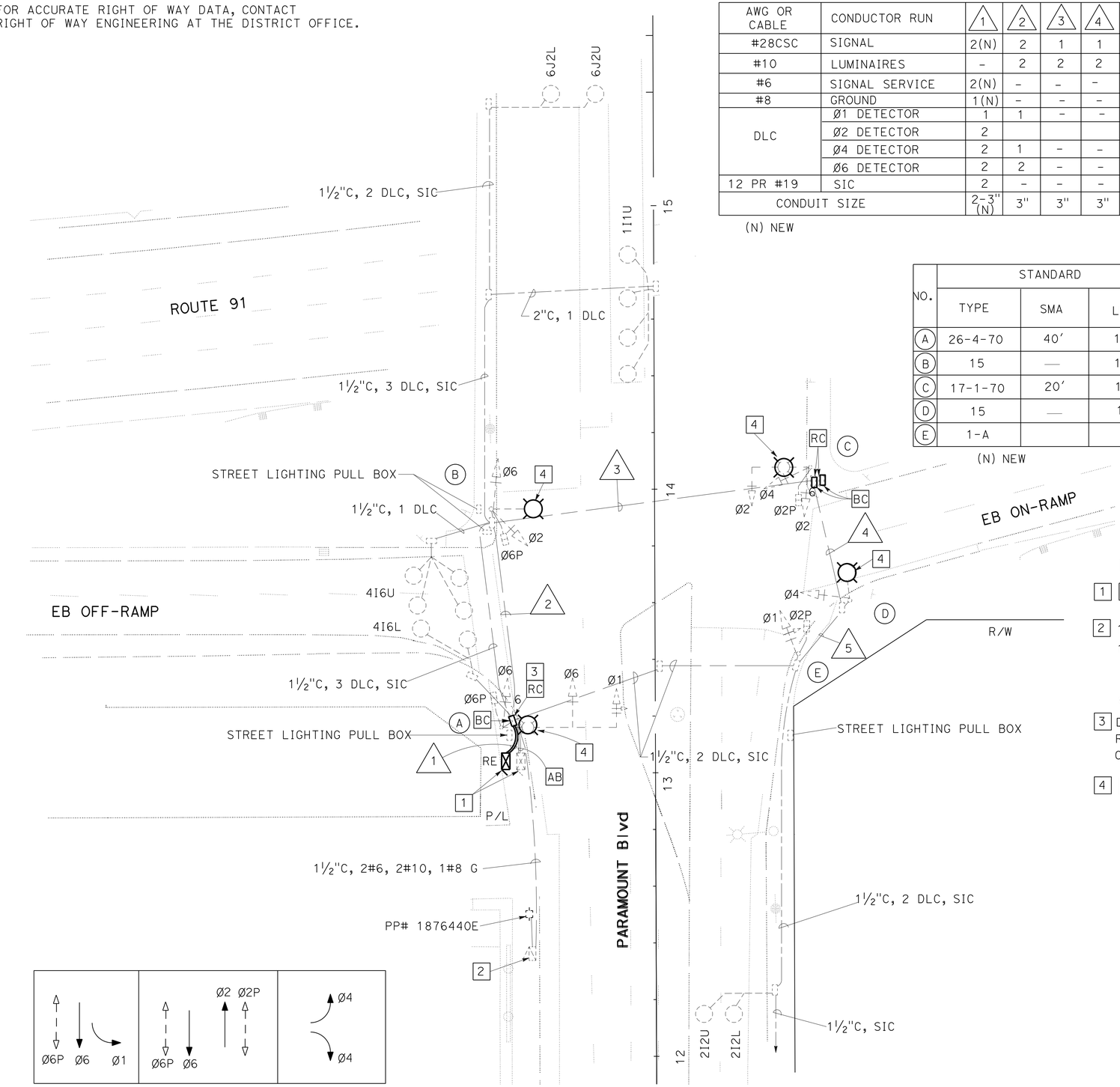

PHASE DIAGRAM

LOCATION 5

LEGEND: (THIS SHEET)

1 RL CONTROLLER ASSEMBLY.

2 120/240 V TYPE III-BF SERVICE EQUIPMENT ENCLOSURE:
100 A, 240 V, 3P, CB - MAIN
50 A, 120 V, 1P, CB -SIGNAL
30 A, 120 V, 1P CB - SAFETY L+g (UNMETERED)
C+id: 07-53-091-0-013.70

3 DISCONNECT SIC, AND DLCs FROM CONTROLLER CABINET AND COIL THEM IN PULL BOX. REROUTE CONDUCTORS THROUGH NEW CONDUITS AND CONNECT INTO RELOCATED CONTROLLER CABINET. USE SLACK IN PULL BOXES AS NEEDED.

4 RC LUMINAIRE. INSTALL LED LUMINAIRE.

MODIFY SIGNAL AND LIGHTING

SCALE: 1" = 20′

APPROVED FOR ELECTRICAL WORK ONLY

E-9

REVISED BY | DATE REVISED
CESAR HERNANDEZ | KENNY NGUYEN
CALCULATED-DESIGNED BY | CHECKED BY
FUNCTIONAL SUPERVISOR | OSWALD ELIZONDO
STATE OF CALIFORNIA - DEPARTMENT OF TRANSPORTATION
Caltrans® TRAFFIC DESIGN

LAST REVISION 00-00-00 | DATE PLOTTED => 21-SEP-2015 | TIME PLOTTED => 10:30

Dist	COUNTY	ROUTE	POST MILES TOTAL PROJECT	SHEET No.	TOTAL SHEETS
07	LA	91	R11.3/R20.7	123	192

REGISTERED ELECTRICAL ENGINEER 6-23-15 DATE

8-10-15
PLANS APPROVAL DATE

REGISTERED PROFESSIONAL ENGINEER CESAR HERNANDEZ No. E15805 Exp. 12-31-16 ELECTRICAL STATE OF CALIFORNIA

THE STATE OF CALIFORNIA OR ITS OFFICERS OR AGENTS SHALL NOT BE RESPONSIBLE FOR THE ACCURACY OR COMPLETENESS OF SCANNED COPIES OF THIS PLAN SHEET.

NOTE:

FOR ACCURATE RIGHT OF WAY DATA, CONTACT RIGHT OF WAY ENGINEERING AT THE DISTRICT OFFICE.

LEGEND: (THIS SHEET)

1. RC EXISTING PEDESTRIAN PUSH BUTTON.
2. RC PEDESTRIAN SIGNAL HEAD. INSTALL LED COUNTDOWN PEDESTRIAN SIGNAL MODULE.
3. INSTALL ACCESSIBLE PEDESTRIAN SIGNAL.
4. RC 310 W HPS Lum AND INSTALL 235 W LED.

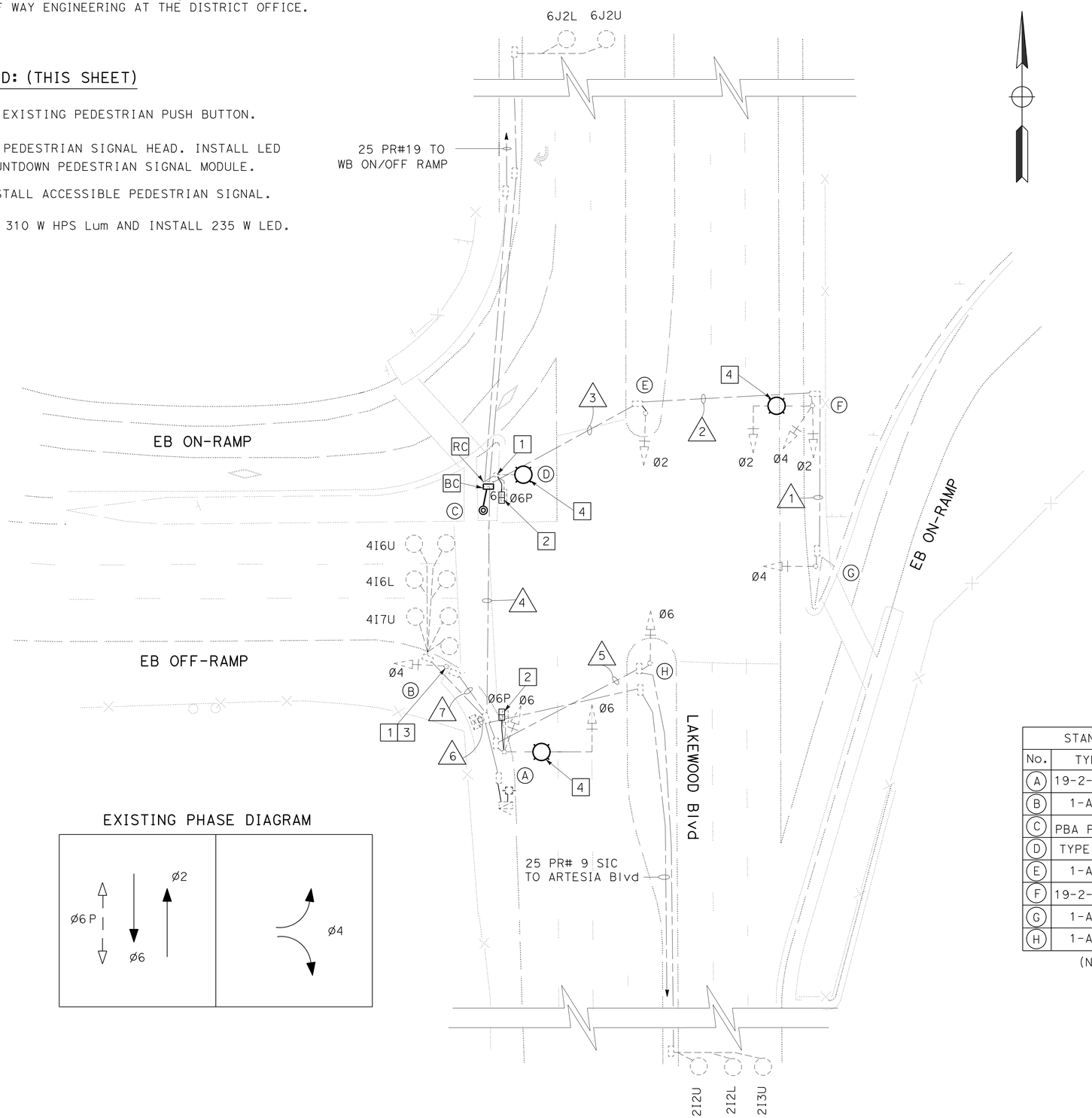

EXISTING PHASE DIAGRAM

CONDUIT AND CONDUCTOR SCHEDULE

AWG OR CABLE	CONDUCTOR RUN	CONDUCTOR RUN NUMBER AND SIZES 1	2	3	4	5	6	7
#14	Ø2		3	3	3	–	3	–
	Ø4	3	3	3	3	–	3	–
	Ø6	–	–	–	–	3	3	–
	Ø6P	–	–	–	2	–	2	–
	Ø6PPB	–	–	–	1	–	1	–
	PPB COMMON	–	–	–	1	–	1	–
	SPARE	3	3	3	3	3	3	3
	TOTAL	6	9	9	13	6	16	3
12CSC	SIGNAL	–	–	–	–	–	1	1
	LUMINAIRES	–	2	2	2	–	–	–
#10	GROUND	1	1	1	1	1	1	1
#6	SERVICE	–	–	–	–	–	2	–
DLC	Ø2 DETECTOR	–	–	–	–	3	3	–
	Ø4 DETECTOR	–	–	–	–	–	3	–
	Ø6 DETECTOR	–	–	–	2	–	2	–
	TOTAL	–	–	–	2	3	8	–
25 PAIR #19	SIC	–	–	–	–	–	2	–
CONDUIT SIZE		2"	2"	2"	3"	2"	2-3"	2"

POLE AND EQUIPMENT SCHEDULE

STANDARD No.	TYPE	SMA	LMA	VEH SIG MTG MAST ARM	POLE	PED SIG M+g	APS Ø	ARROW	LED LUMINAIRE (W)
A	19-2-113	25′	12′	MAS	SV-1-T	SP-1-T		–	235 (N)
B	1-A	–	–	–	TV-1-T	–	6(N)	→	–
C	PBA POST(N)	–	–	–	–	–	6(N)	←	–
D	TYPE 15		12′	–	–	SP-1-T	–	–	235 (N)
E	1-A	–	–	–	TV-1-T	–	–	–	–
F	19-2-113	25′	12′	MAS	SV-2-TA	–	–	–	235 (N)
G	1-A				TV-1-T	–	–	–	–
H	1-A	–	–	–	TV-1-T	–	–	–	–

(N) NEW

MODIFY SIGNAL AND LIGHTING

SCALE: 1" = 20′

E-10

STATE OF CALIFORNIA - DEPARTMENT OF TRANSPORTATION
Caltrans® TRAFFIC DESIGN

FUNCTIONAL SUPERVISOR: OSWALD ELIZONDO
CALCULATED-DESIGNED BY: KENNY NGUYEN
CHECKED BY: CESAR HERNANDEZ
REVISED BY / DATE REVISED

LAST REVISION 00-00-00 | DATE PLOTTED => 21-SEP-2015 | TIME PLOTTED => 10:30

Dist	COUNTY	ROUTE	POST MILES TOTAL PROJECT	SHEET No.	TOTAL SHEETS
07	LA	91	R11.3/R20.7	124	192

REGISTERED ELECTRICAL ENGINEER 6-23-15 DATE

8-10-15
PLANS APPROVAL DATE

REGISTERED PROFESSIONAL ENGINEER CESAR HERNANDEZ No. E15805 Exp. 12-31-16 ELECTRICAL STATE OF CALIFORNIA

THE STATE OF CALIFORNIA OR ITS OFFICERS OR AGENTS SHALL NOT BE RESPONSIBLE FOR THE ACCURACY OR COMPLETENESS OF SCANNED COPIES OF THIS PLAN SHEET.

NOTE:

FOR ACCURATE RIGHT OF WAY DATA, CONTACT RIGHT OF WAY ENGINEERING AT THE DISTRICT OFFICE.

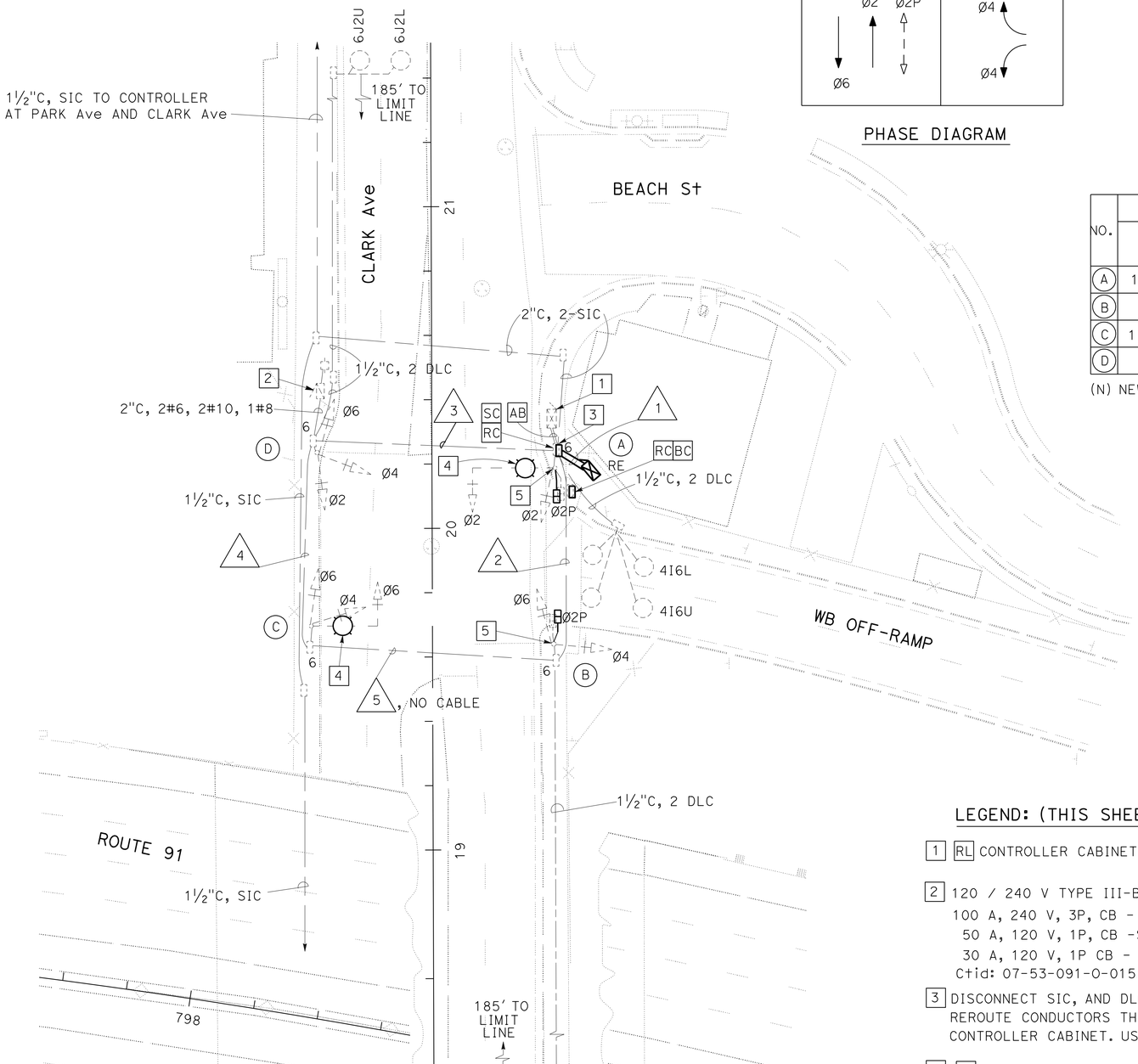

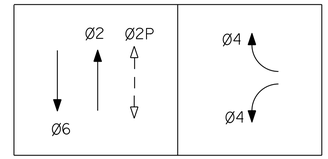

PHASE DIAGRAM

POLE AND EQUIPMENT SCHEDULE

NO.	STANDARD			VEH SIG Mtg		PED SIGNAL	APS		LED LUMINAIRE (W)	SPECIAL REQUIREMENTS
	TYPE	SMA	LMA	MAST ARM	POLE	Mtg	Ø	ARROW		
A	19-2-70	25'	12	MAT	SV-1-T	SP-1-T	2(N)	←	165 (N)	TYPE IV PEC
B	1-A	—	—	—	TV-2-T	SP-1-T	2(N)	→	—	—
C	17B-2-70	20'	12'	MAT	SV-2-T	—	—	—	165 (N)	TYPE IV PEC
D	1-A	—	—	—	TV-3-T	—	—	—	—	—

(N) NEW

CONDUIT AND CONDUCTOR SCHEDULE

AWG OR CABLE	CONDUCTOR RUN	1	2	3	4	5
#28CSC	SIGNAL	2(N)	2	2	2	-
#10	LUMINAIRES	-	-	2	2	-
#6	SIGNAL SERVICE	2(N)	-	2	-	-
#8	GROUND	1(N)	-	-	-	-
DLC	Ø2 DETECTOR	2	2	-	-	-
	Ø4 DETECTOR	2	2			
	Ø6 DETECTOR	2		2		-
12 PR #19	SIC	2		-	-	-
CONDUIT SIZE		2-3" (N)	3"	3"	3"	3"

(N) NEW

LEGEND: (THIS SHEET)

1 RL CONTROLLER CABINET ASSEMBLY.

2 120 / 240 V TYPE III-BF SERVICE EQUIPMENT ENCLOSURE:
100 A, 240 V, 3P, CB - MAIN
50 A, 120 V, 1P, CB -SIGNAL
30 A, 120 V, 1P CB - SAFETY Ltg (UNMETERED)
Ctid: 07-53-091-O-015.21

3 DISCONNECT SIC, AND DLCs FROM CONTROLLER CABINET AND COIL THEM IN PULL BOX. REROUTE CONDUCTORS THROUGH NEW CONDUITS AND CONNECT INTO RELOCATED CONTROLLER CABINET. USE SLACK IN PULL BOXES AS NEEDED.

4 RC LUMINAIRE. INSTALL LED LUMINAIRE.

5 RC Ped PUSH BUTTON AND Ped SIGNAL HEAD. INSTALL APS AND LED COUNTDOWN Ped SIGNAL HEAD.

MODIFY SIGNAL AND LIGHTING

SCALE: 1" = 20'

APPROVED FOR ELECTRICAL WORK ONLY

E-11

STATE OF CALIFORNIA - DEPARTMENT OF TRANSPORTATION
Caltrans® TRAFFIC DESIGN

FUNCTIONAL SUPERVISOR: OSWALD ELIZONDO
CALCULATED-DESIGNED BY: CESAR HERNANDEZ
CHECKED BY: KENNY NGUYEN
REVISED BY
DATE REVISED

LAST REVISION 00-00-00
DATE PLOTTED => 21-SEP-2015
TIME PLOTTED => 10:30

Dist	COUNTY	ROUTE	POST MILES TOTAL PROJECT	SHEET No.	TOTAL SHEETS
07	LA	91	R11.3/R20.7	125	192

REGISTERED ELECTRICAL ENGINEER 6-23-15 DATE

8-10-15
PLANS APPROVAL DATE

REGISTERED PROFESSIONAL ENGINEER CESAR HERNANDEZ No. E15805 Exp. 12-31-16 ELECTRICAL STATE OF CALIFORNIA

THE STATE OF CALIFORNIA OR ITS OFFICERS OR AGENTS SHALL NOT BE RESPONSIBLE FOR THE ACCURACY OR COMPLETENESS OF SCANNED COPIES OF THIS PLAN SHEET.

NOTE:

FOR ACCURATE RIGHT OF WAY DATA, CONTACT RIGHT OF WAY ENGINEERING AT THE DISTRICT OFFICE.

POLE AND EQUIPMENT SCHEDULE

STANDARD				Veh Sig Mtg		Ped SIGNAL	APS		LED LUMINAIRE (W)
NO.	TYPE	SMA	LMA	MAST ARM	POLE	Mtg	Ø	ARROW	
A	1-A -7′	—	—	—	—	TP-1-T	—	—	—
B	PBA POST (N)	—	—	—	—	—	2(N)	←	—
C	PBA POST (N)	—	—	—	—	—	2(N)	→	—
D	1-A	—	—	—	TV-1-T	SP-1-T	—	—	—
E	XVII	15′	12′	MAT	SV-2-T	SP-1-T	—	←	165
F	1-A	—	—	—	TV-2-T	—	—	—	—
G	XVII	15′	12′	MAT	SV-1-T	SP-1-T	—	—	165

(N) NEW

CONDUIT AND CONDUCTOR SCHEDULE

AWG OR CABLE	CONDUCTOR RUN	1	2	3	4	5
#14	Ø2	3	3	3	3	3
	Ø4	3	3	3	—	3
	Ø2P	—	—	—	2	2
	Ø4P	2	2	2	2	2
	Ø2PPB	—	—	—	1	1
	Ø4PPB	1	1	1	1	1
	SPARES	3	3	3	3	6
#12	PPB COMMON	1	1	1	1	1
DLC	Ø2 DETECTORS	—	—	2	2	4
	Ø4 DETECTORS	—	—	—	—	2
#10	LUMINAIRES	2	2	2	—	—
	SIGNAL COMMON	1	1	1	1	1
#8	SERVICE	—	2	2	—	2
CONDUIT SIZE		2"	2"	2"	2"	2-2"

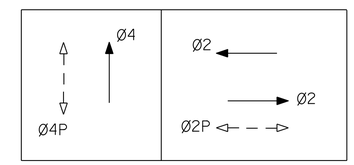

PHASE DIAGRAM

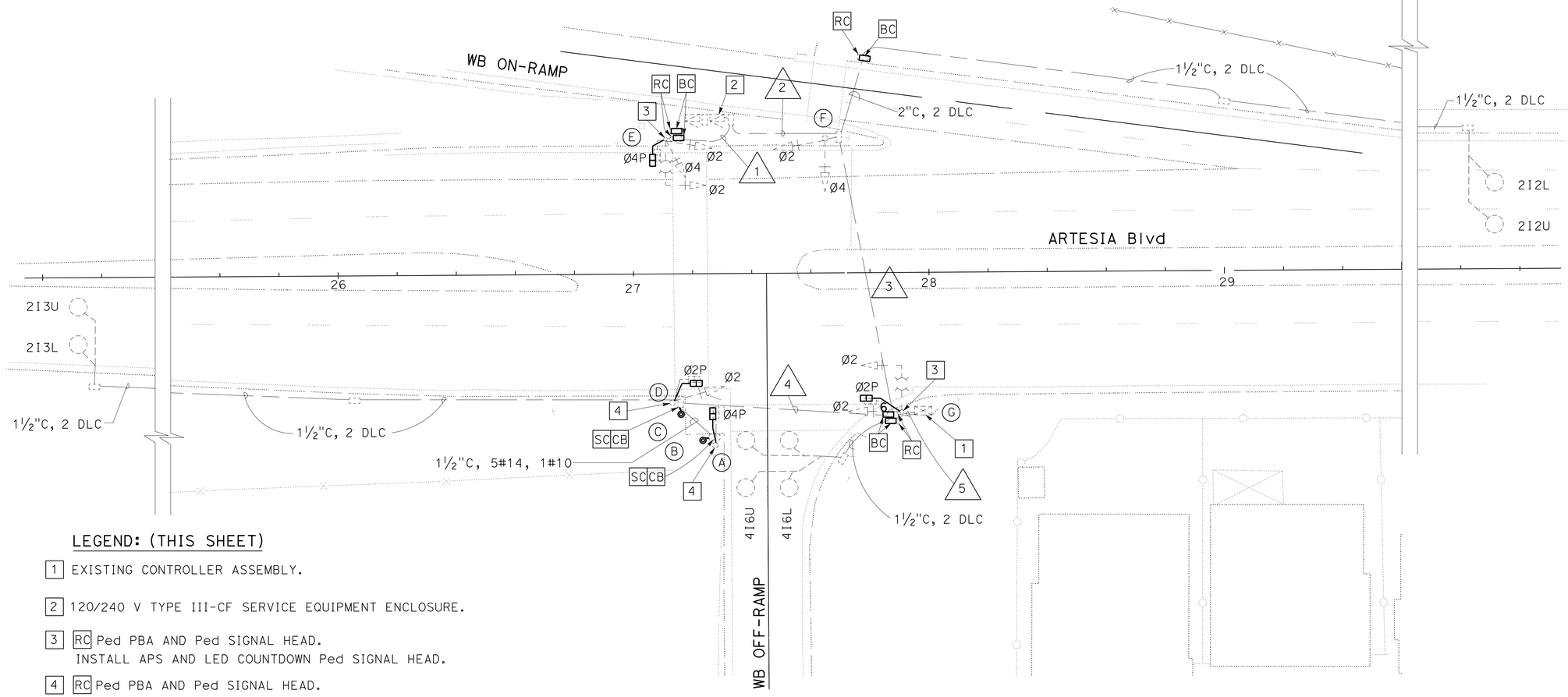

LEGEND: (THIS SHEET)

1 EXISTING CONTROLLER ASSEMBLY.

2 120/240 V TYPE III-CF SERVICE EQUIPMENT ENCLOSURE.

3 RC Ped PBA AND Ped SIGNAL HEAD.
INSTALL APS AND LED COUNTDOWN Ped SIGNAL HEAD.

4 RC Ped PBA AND Ped SIGNAL HEAD.
INSTALL LED COUNTDOWN Ped SIGNAL HEAD.

APPROVED FOR ELECTRICAL WORK ONLY

MODIFY SIGNAL AND LIGHTING

SCALE: 1" = 20′

E-12

STATE OF CALIFORNIA - DEPARTMENT OF TRANSPORTATION
Caltrans® TRAFFIC DESIGN

FUNCTIONAL SUPERVISOR: OSWALD ELIZONDO
CALCULATED-DESIGNED BY: CESAR HERNANDEZ
CHECKED BY: KENNY NGUYEN
REVISED BY / DATE REVISED

LAST REVISION 00-00-00 | DATE PLOTTED => 21-SEP-2015 | TIME PLOTTED => 10:30

Dist	COUNTY	ROUTE	POST MILES TOTAL PROJECT	SHEET No.	TOTAL SHEETS
07	LA	91	R11.3/R20.7	126	192

REGISTERED ELECTRICAL ENGINEER 6-23-15 DATE

8-10-15
PLANS APPROVAL DATE

REGISTERED PROFESSIONAL ENGINEER
CESAR HERNANDEZ
No. E15805
Exp. 12-31-16
ELECTRICAL
STATE OF CALIFORNIA

THE STATE OF CALIFORNIA OR ITS OFFICERS OR AGENTS SHALL NOT BE RESPONSIBLE FOR THE ACCURACY OR COMPLETENESS OF SCANNED COPIES OF THIS PLAN SHEET.

NOTE:

FOR ACCURATE RIGHT OF WAY DATA, CONTACT
RIGHT OF WAY ENGINEERING AT THE DISTRICT OFFICE.

LEGEND:(THIS SHEET ONLY)

1 Exist 120/240 V, TYPE III-BF METERED SERVICE EQUIPMENT
ENCLOSURE WITH TYPE V PEC AND:
100 A, 2P MAIN CIRCUIT BREAKER
30 A, 2P, CB (LIGHTING)
30 A, 2P, CB (SIGN ILLUMINATION)
15 A, 1P, CB (PEC)
Ctid No. 07-53-091-R-13.28
ADDRESS: 6641½ SARINA Ave

2 INSTALL TAMPER RESISTANT PULL BOX COVER ON NEW PULL BOX.

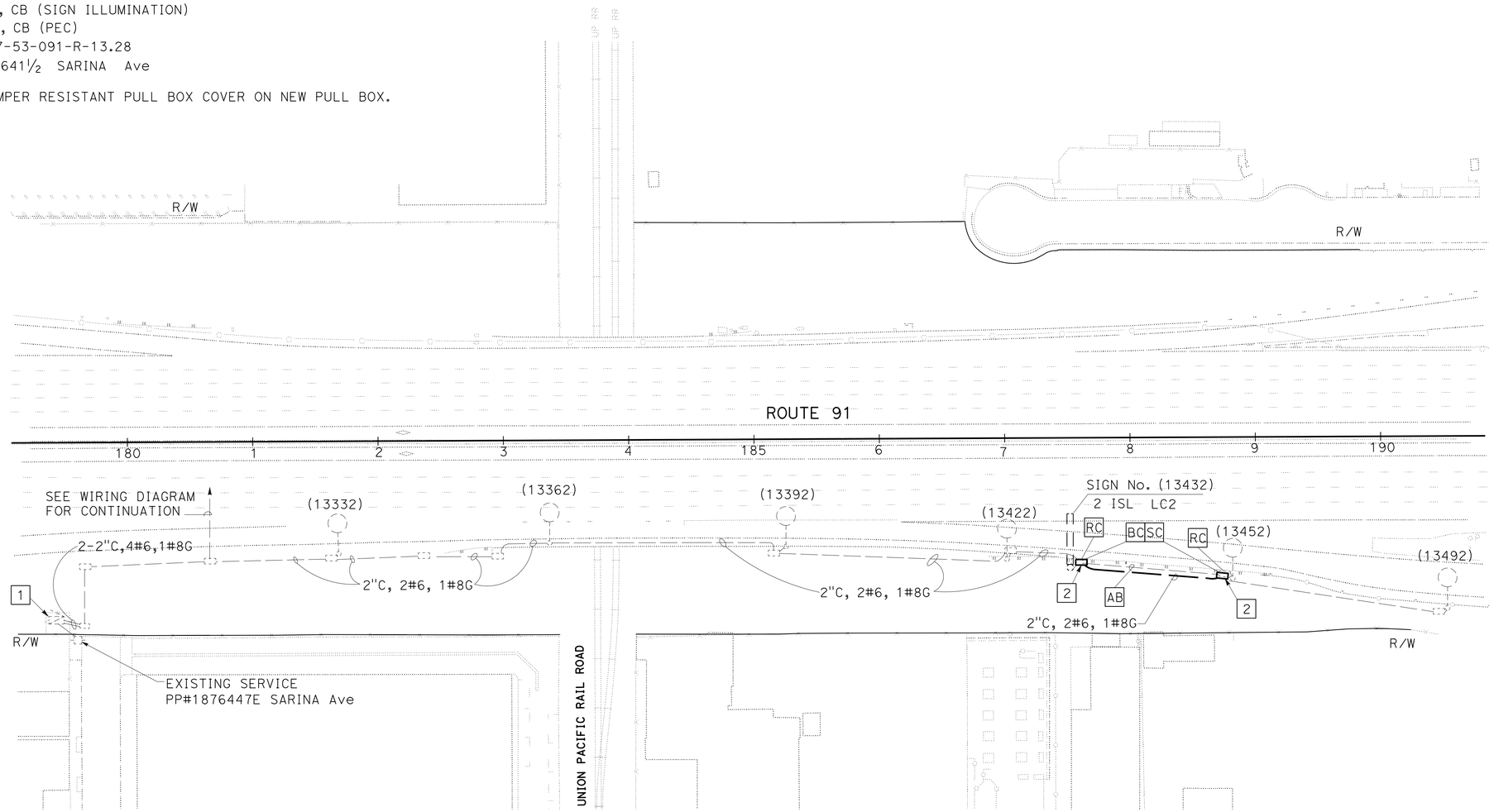

MODIFY LIGHTING AND SIGN ILLUMINATION

SCALE: 1" = 50'

APPROVED FOR ELECTRICAL WORK ONLY

E-13

CESAR HERNANDEZ — REVISED BY
KENNY NGUYEN — DATE REVISED
CALCULATED-DESIGNED BY
CHECKED BY
FUNCTIONAL SUPERVISOR
OSWALD ELIZONDO

STATE OF CALIFORNIA - DEPARTMENT OF TRANSPORTATION
Caltrans
TRAFFIC DESIGN

LAST REVISION 00-00-00
DATE PLOTTED => 21-SEP-2015
TIME PLOTTED => 10:30

Dist	COUNTY	ROUTE	POST MILES TOTAL PROJECT	SHEET No.	TOTAL SHEETS
07	LA	91	R11.3/R20.7	127	192

REGISTERED ELECTRICAL ENGINEER 6-23-15 DATE

8-10-15
PLANS APPROVAL DATE

REGISTERED PROFESSIONAL ENGINEER CESAR HERNANDEZ No. E15805 Exp 12-31-16 ELECTRICAL STATE OF CALIFORNIA

THE STATE OF CALIFORNIA OR ITS OFFICERS OR AGENTS SHALL NOT BE RESPONSIBLE FOR THE ACCURACY OR COMPLETENESS OF SCANNED COPIES OF THIS PLAN SHEET.

NOTE:

FOR ACCURATE RIGHT OF WAY DATA, CONTACT RIGHT OF WAY ENGINEERING AT THE DISTRICT OFFICE.

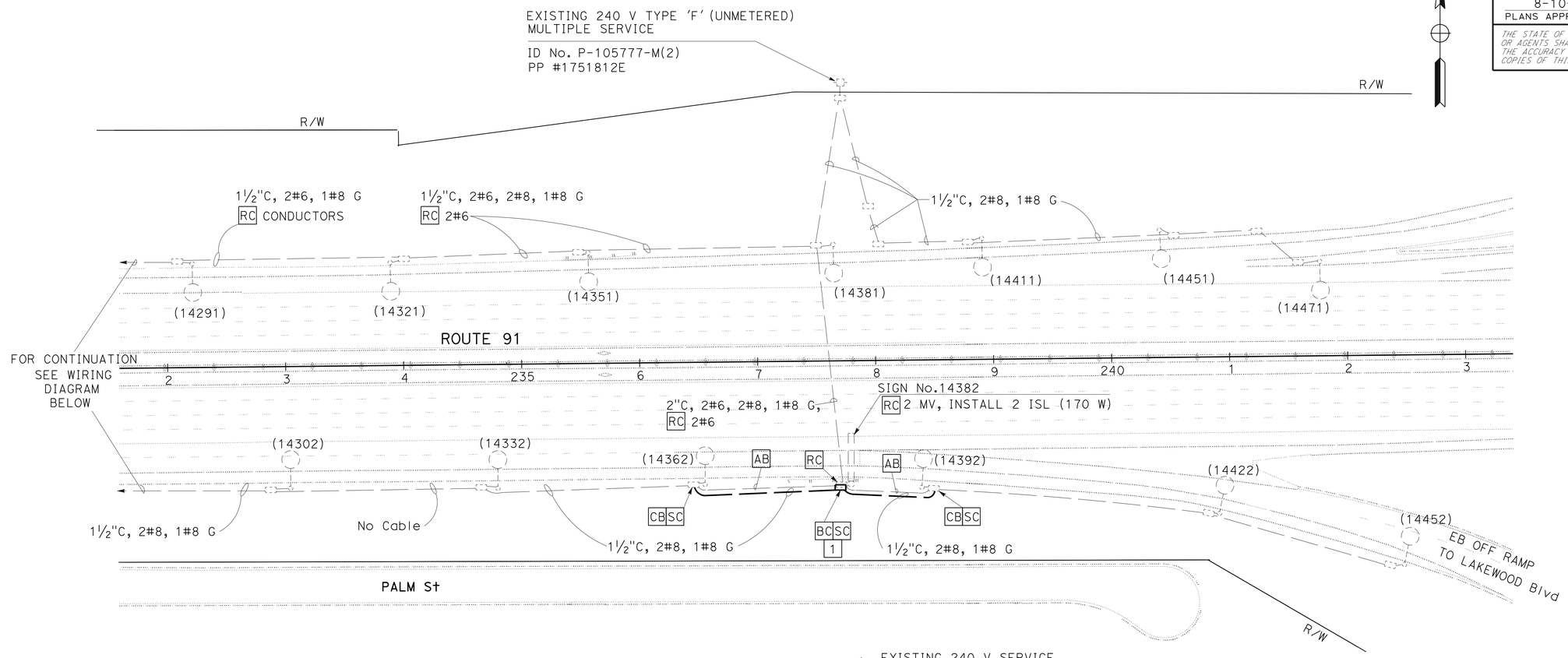

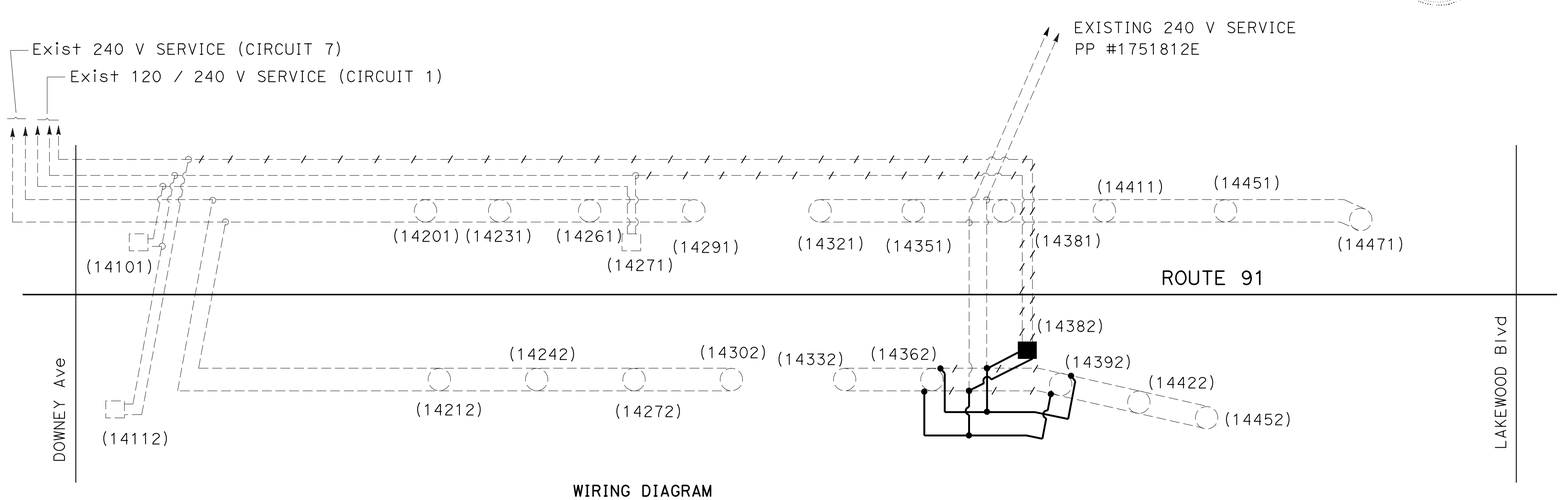

WIRING DIAGRAM
NTS

LEGEND: (THIS SHEET ONLY)

- 1 INSTALL TAMPER RESISTANT PULL BOX COVER ON NEW PULL BOX.
- Exist LAMP TO REMAIN
- Exist SIGN LAMPS TO REMAIN
- 2 - 85 W ISL
- EXISTING CONCUCTOR TO REMAIN
- NEW CONDUCTOR
- REMOVE CONDUCTOR
- SPLICE CONDUCTORS

MODIFY LIGHTING AND SIGN ILLUMINATION

SCALE: 1" = 50'

APPROVED FOR ELECTRICAL WORK ONLY

E-14

REVISED BY | DATE REVISED
CESAR HERNANDEZ | KENNY NGUYEN
CALCULATED-DESIGNED BY | CHECKED BY
FUNCTIONAL SUPERVISOR | OSWALD ELIZONDO

STATE OF CALIFORNIA - DEPARTMENT OF TRANSPORTATION
Caltrans
TRAFFIC DESIGN

LAST REVISION 00-00-00 | DATE PLOTTED => 21-SEP-2015 | TIME PLOTTED => 10:30

Dist	COUNTY	ROUTE	POST MILES TOTAL PROJECT	SHEET No.	TOTAL SHEETS
07	LA	91	R11.3/R20.7	128	192

REGISTERED ELECTRICAL ENGINEER 6-23-15 DATE

8-10-15
PLANS APPROVAL DATE

REGISTERED PROFESSIONAL ENGINEER CESAR HERNANDEZ No. E15805 Exp. 12-31-16 ELECTRICAL STATE OF CALIFORNIA

THE STATE OF CALIFORNIA OR ITS OFFICERS OR AGENTS SHALL NOT BE RESPONSIBLE FOR THE ACCURACY OR COMPLETENESS OF SCANNED COPIES OF THIS PLAN SHEET.

NOTE:

FOR ACCURATE RIGHT OF WAY DATA, CONTACT RIGHT OF WAY ENGINEERING AT THE DISTRICT OFFICE.

LEGEND: (THIS SHEET)

1 INSTALL TAMPER RESISTANT PULL BOX COVER ON NEW PULL BOX.

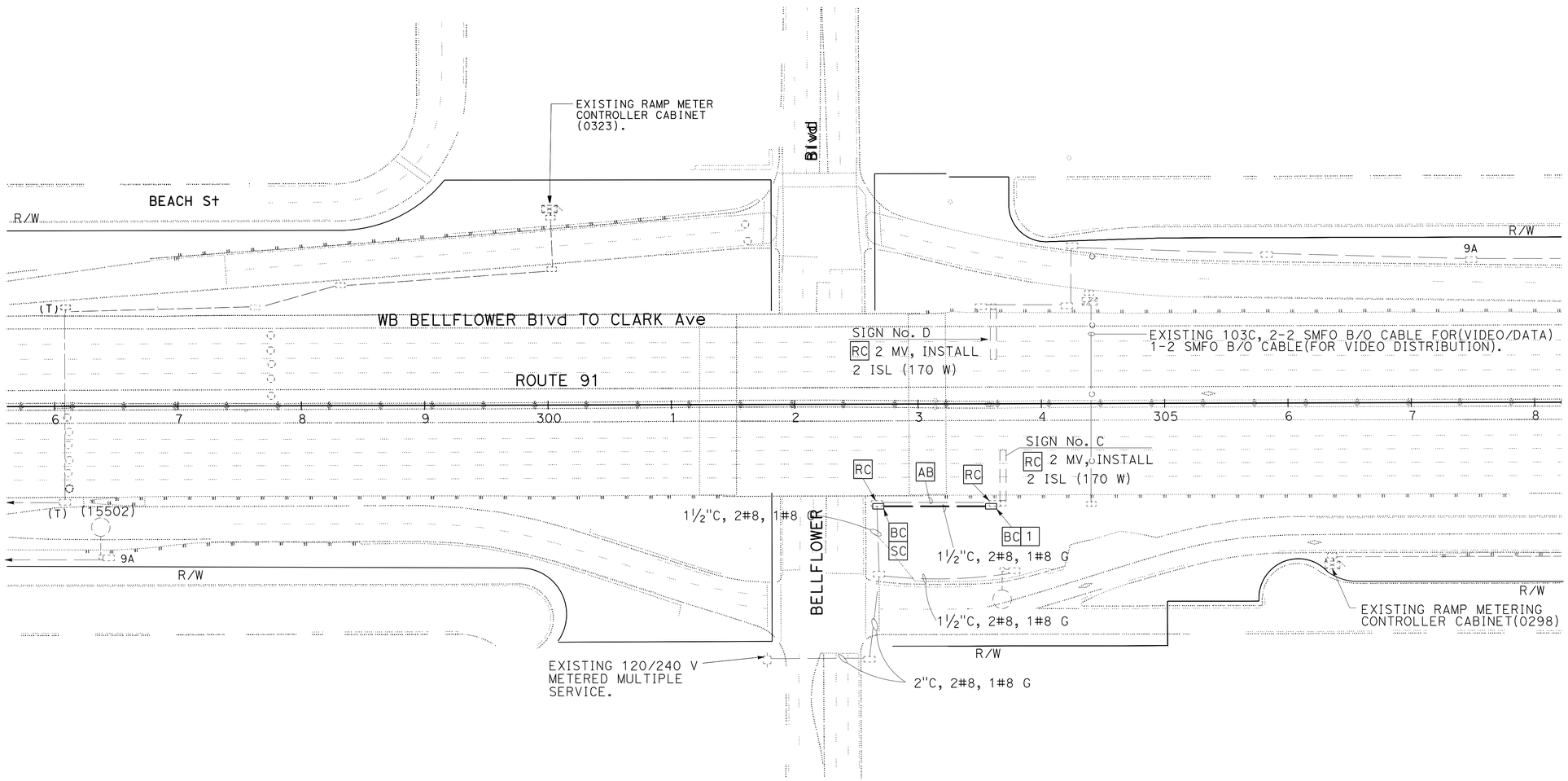

MODIFY LIGHTING AND SIGN ILLUMINATION

SCALE: 1" = 50'

APPROVED FOR ELECTRICAL WORK ONLY

E-15

STATE OF CALIFORNIA - DEPARTMENT OF TRANSPORTATION
Caltrans® TRAFFIC DESIGN

FUNCTIONAL SUPERVISOR: OSWALD ELIZONDO
CALCULATED-DESIGNED BY: CESAR HERNANDEZ
CHECKED BY: KENNY NGUYEN
REVISED BY
DATE REVISED

LAST REVISION 00-00-00
DATE PLOTTED => 21-SEP-2015
TIME PLOTTED => 10:30

Dist	COUNTY	ROUTE	POST MILES TOTAL PROJECT	SHEET No.	TOTAL SHEETS
07	LA	91	R11.3/R20.7	129	192

REGISTERED ELECTRICAL ENGINEER 6-23-15 DATE

8-10-15
PLANS APPROVAL DATE

REGISTERED PROFESSIONAL ENGINEER
CESAR HERNANDEZ
No. E15805
Exp. 12-31-16
ELECTRICAL
STATE OF CALIFORNIA

THE STATE OF CALIFORNIA OR ITS OFFICERS OR AGENTS SHALL NOT BE RESPONSIBLE FOR THE ACCURACY OR COMPLETENESS OF SCANNED COPIES OF THIS PLAN SHEET.

LEGEND: (THIS SHEET ONLY)

- EXISTING LAMP TO REMAIN.
- EXISTING SIGN LAMPS TO REMAIN.
- EXISTING CONDUCTOR TO REMAIN.
- NEW CONDUCTOR.
- REMOVE CONDUCTOR.
- SPLICE CONDUCTORS.

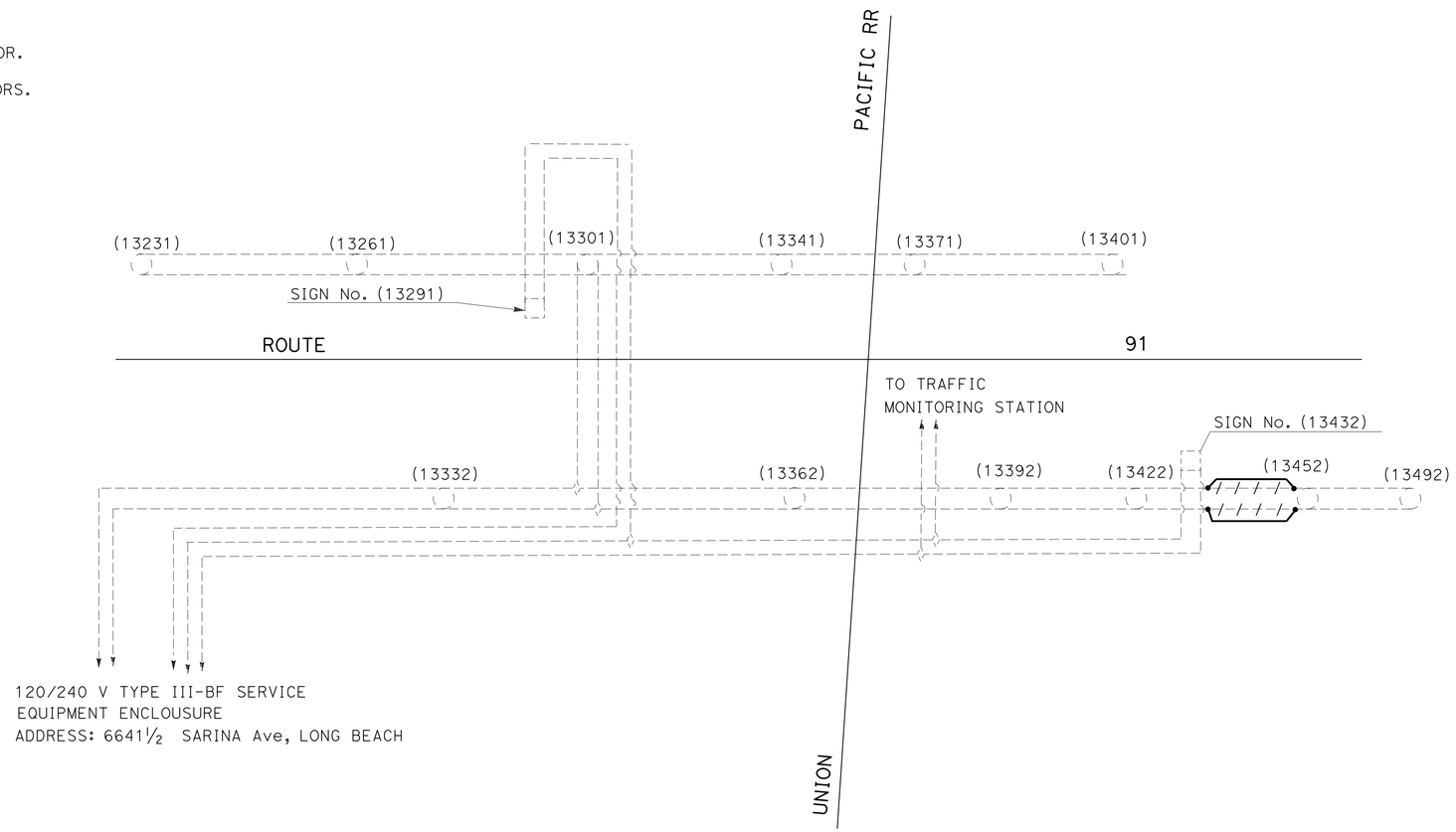

MODIFY LIGHTING AND SIGN ILLUMINATION

NO SCALE

APPROVED FOR ELECTRICAL WORK ONLY

E-16

REVISED BY | DATE REVISED
CESAR HERNANDEZ | KENNY NGUYEN
CALCULATED-DESIGNED BY | CHECKED BY
FUNCTIONAL SUPERVISOR
OSWALD ELIZONDO

STATE OF CALIFORNIA - DEPARTMENT OF TRANSPORTATION
Caltrans
TRAFFIC DESIGN

LAST REVISION 00-00-00 | DATE PLOTTED => 21-SEP-2015 | TIME PLOTTED => 10:30

Dist	COUNTY	ROUTE	POST MILES TOTAL PROJECT	SHEET No.	TOTAL SHEETS
07	LA	91	R11.3/R20.7	130	192

REGISTERED ELEC. ENGINEER 6-23-15 DATE

8-10-15
PLANS APPROVAL DATE

REGISTERED PROFESSIONAL ENGINEER CESAR HERNANDEZ No. E15805 Exp. 12-31-16 ELECTRICAL STATE OF CALIFORNIA

THE STATE OF CALIFORNIA OR ITS OFFICERS OR AGENTS SHALL NOT BE RESPONSIBLE FOR THE ACCURACY OR COMPLETENESS OF SCANNED COPIES OF THIS PLAN SHEET.

NOTE:

ITEMS SHOWN IN TABLES ARE NOT A SEPARATE PAY ITEM, FOR INFORMATION ONLY.

INDUCTIVE LOOP DETECTOR

SHEET No.	TYPE "E" LOOP DETECTOR	2"C STUBOUTS	TYPE "D" LOOP DETECTOR
	EA	EA	EA
E-1	127	24	-
E-2	104	20	-
E-3	171	61	2
E-4	178	67	13
E-5	3	2	-

MODIFY AUTOMATIC VEHICLE CLASSIFICATION STATION

SHEET No.	LOOP DETECTORS	2"C STUBOUTS	PIEZO AXLE SENSOR
	EA	EA	EA
E-6	12	2	24

MODIFY SIGNAL AND LIGHTING

SHEET No.	RELOCATE CONTROLLER	PBA POST	PEDESTRIAN LED COUNTDOWN SIGNAL HEAD	APS	28CSC	CONDUCTOR 1#6 (6)	CONDUCTOR 1#8 (G)	CONDUCTOR 2#10	CONDUCTOR 2#6	DLC	2"C TYPE 1	3"C TYPE 1	LED LUMINAIRE 165 W	LED LUMINAIRE 235 W	PULL BOX TYPE 5	PULL BOX TYPE 6
	EA	EA	EA	EA	LF	LF	LF	LF	LF	LF	LF	LF	EA	EA	EA	EA
E-8	-	-	-	-	220	300	220	440	-	160	25	-	-	4	3	1
E-9	1	-	-	-	20	-	10	-	20	-	-	20	4	-	2	1
E-10	-	1	2	2	-	-	-	-	-	-	-	-	-	3	-	1
E-11	1	-	2	2	40	-	15	-	40	-	-	30	2	-	1	-
E-12	-	2	4	2	-		-	-	-	-	-	-	-	-	4	1

LIGHTING AND SIGN ILLUMINATION

SHEET No.	1½"C TYPE 1	PULL BOX No.5	CONDUCTOR 2#6	CONDUCTOR 2#8	GROUND CONDUCTOR 1#8 (G)	ISL	TAMPER RESISTANT PB COVER
	LF	EA	LF	LF	LF	EA	EA
E-13	110	2	220	-	110	-	2
E-14	220	1	-	440	220	2	1
E-15	100	2	-	200	100	2	1

ELECTRICAL QUANTITIES

E-17

REVISED BY | DATE REVISED
Y. SHADROOZ | OSWALD ELIZONDO
CALCULATED-DESIGNED BY | CHECKED BY
FUNCTIONAL SUPERVISOR: OSWALD ELIZONDO
STATE OF CALIFORNIA - DEPARTMENT OF TRANSPORTATION
Caltrans TRAFFIC DESIGN

LAST REVISION 00-00-00 | DATE PLOTTED => 21-SEP-2015 | TIME PLOTTED => 10:30

Dist	COUNTY	ROUTE	POST MILES TOTAL PROJECT	SHEET No.	TOTAL SHEETS
07	LA	91	R11.3/R20.7	131	192

REGISTERED ELEC. ENGINEER 6-23-15 DATE

8-10-15
PLANS APPROVAL DATE

REGISTERED PROFESSIONAL ENGINEER CESAR HERNANDEZ No. E15805 Exp. 12-31-16 ELECTRICAL STATE OF CALIFORNIA

THE STATE OF CALIFORNIA OR ITS OFFICERS OR AGENTS SHALL NOT BE RESPONSIBLE FOR THE ACCURACY OR COMPLETENESS OF SCANNED COPIES OF THIS PLAN SHEET.

LEGEND: (THIS SHEET)

1. RC EXISTING PULL BOX AT CURB RAMP AREA. INSTALL NEW PB AT SAME LOCATION.

Q1-NW QUADRANT OF INTERSECTION
Q2-NE QUADRANT OF INTERSECTION
Q3-SE QUADRANT OF INTERSECTION
Q4-SW QUADRANT OF INTERSECTION

PULL BOX LOCATION

RAMP No.	DESCRIPTION		SEE DETAIL ON THIS SHEET FOR TYPICAL LOCATION OF PULL BOX				No. OF PB (REPLACE)
			Q1	Q2	Q3	Q4	
1	EB 91	CHERRY Ave ON-RAMP		2-X			2
2	WB 91	PARAMOUNT Blvd ON-RAMP	X				1
3	EB 91	DOWNEY Ave OFF-RAMP	Z		X, Z		3
4	WB 91	DOWNEY Ave ON-RAMP	X			X	2
5	EB 91	SB LAKEWOOD Blvd ON-RAMP	X				1
6	WB 91	LAKEWOOD Blvd OFF-RAMP		2-X, 2-Z	2-X		6
7	WB 91	SB LAKEWOOD Blvd ON-RAMP	X				1
8	EB 91	CLARK Ave ON-RAMP		Z			1
9	WB 91	PIONEER Blvd OFF-RAMP			X		1
10	EB 91	PIONEER Blvd OFF-RAMP	X				1
11	WB 91	NB NORWALK Blvd ON-RAMP		X			1
12	WB 91	NORWALK Blvd OFF-RAMP	X	X	X	X	4
13	EB 91	NORWALK Blvd OFF-RAMP	X				1
14	EB 91	NB NORWALK Blvd ON-RAMP		X			1
15	EB 91	BELLFLOWER Blvd OFF-RAMP	X, Z	X, Z			4
16	EB 91	STUDEBAKER Rd ON-RAMP			X		1
17	WB 91	STUDEBAKER Rd OFF-RAMP		2-Z	X		3
18	WB 91	NB PIONEER Blvd ON-RAMP		X			1
19	WB 91	PIONEER Blvd OFF-RAMP		Z	X		2
20	EB 91	PIONEER Blvd OFF-RAMP	X			Z	2
21	EB 91	SB PIONEER Blvd ON-RAMP	X			X	2
22	WB 91	SB NORWALK Blvd ON-RAMP	X			2-X	3
23	WB 91	NB NORWALK Blvd ON-RAMP		X	X		2
24	WB 91	NORWALK Blvd OFF-RAMP		X	X		2
25	EB 91	SB NORWALK Blvd ON-RAMP	X				1
26	EB 91	NB NORWALK Blvd ON-RAMP		X	X		2

X - REPLACE EXISTING PULL BOX WITH NEW No. 5 PB.
Z - REPLACE EXISTING PULL BOX WITH NEW No. 6 PB.

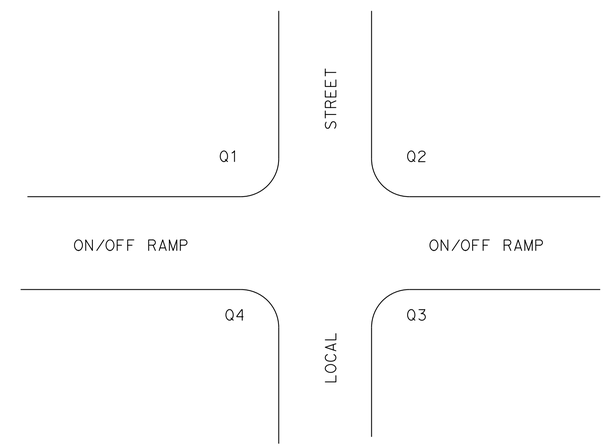

REPLACE PULL BOX

NO SCALE

E-18

STATE OF CALIFORNIA - DEPARTMENT OF TRANSPORTATION
Caltrans® TRAFFIC DESIGN

FUNCTIONAL SUPERVISOR: OSWALD ELIZONDO
CALCULATED-DESIGNED BY: Y. SHADROOZ
CHECKED BY: OSWALD ELIZONDO
REVISED BY
DATE REVISED

LAST REVISION 00-00-00
DATE PLOTTED => 21-SEP-2015
TIME PLOTTED => 10:30

M

Maint	MAINTENANCE
Max	MAXIMUM
MB	METAL BEAM
MBB	METAL BEAM BARRIER
MBGR	METAL BEAM GUARD RAILING
Med	MEDIAN
MGS	MIDWEST GUARDRAIL SYSTEM
MH	MANHOLE
Min	MINIMUM
Misc	MISCELLANEOUS
Misc I & S	MISCELLANEOUS IRON AND STEEL
Mkr	MARKER
Mod	MODIFIED,
	MODIFY
Mon	MONUMENT
MP	METAL PLATE
MPGR	METAL PLATE GUARD RAILING
MR	MOVEMENT RATING
MSE	MECHANICALLY STABILIZED EMBANKMENT
Mt	MOUNTAIN, MOUNT
Mtl	MATERIAL
MVP	MAINTENANCE VEHICLE PULLOUT

N

N	NORTH
NB	NORTHBOUND
No.	NUMBER (MUST HAVE PERIOD)
Nos.	NUMBERS (MUST HAVE PERIOD)
NPS	NOMINAL PIPE SIZE
NS	NEAR SIDE
NSP	NEW STANDARD PLAN
NTS	NOT TO SCALE

O

Oblr	OBLITERATE
OC	OVERCROSSING
OD	OUTSIDE DIAMETER
OF	OUTSIDE FACE
OG	ORIGINAL GROUND
OGAC	OPEN GRADED ASPHALT CONCRETE
OGFC	OPEN GRADED FRICTION COURSE
OH	OVERHEAD
OHWM	ORDINARY HIGH WATER MARK
O-O	OUT TO OUT
Opp	OPPOSITE
OSD	OVERSIDE DRAIN

P

P	PAGE
PAP	PERFORATED ALUMINUM PIPE
PB	PULL BOX
PC	POINT OF CURVATURE,
	PRECAST
PCC	POINT OF COMPOUND CURVE,
	PORTLAND CEMENT CONCRETE
PCMS	PORTABLE CHANGEABLE MESSAGE SIGN
PCP	PERFORATED CONCRETE PIPE,
	PRESTRESSED CONCRETE PIPE
PCVC	POINT OF COMPOUND VERTICAL CURVE
PEC	PERMIT TO ENTER AND CONSTRUCT
Ped	PEDESTRIAN
Ped OC	PEDESTRIAN OVERCROSSING
Ped UC	PEDESTRIAN UNDERCROSSING
Perm Mtl	PERMEABLE MATERIAL

P continued

PG	PROFILE GRADE
PI	POINT OF INTERSECTION
PJP	PARTIAL JOINT PENETRATION
Pkwy	PARKWAY
ℙ,PL	PLATE
P/L	PROPERTY LINE
PM	POST MILE,
	TIME FROM NOON TO MIDNIGHT
PN	PAVING NOTCH
POC	POINT OF HORIZONTAL CURVE
POT	POINT OF TANGENT
POVC	POINT OF VERTICAL CURVE
PP	PIPE PILE,
	PLASTIC PIPE,
	POWER POLE
PPL	PREFORMED PERMEABLE LINER
PPP	PERFORATED PLASTIC PIPE
PRC	POINT OF REVERSE CURVE
PRF	PAVEMENT REINFORCING FABRIC
PRVC	POINT OF REVERSE VERTICAL CURVE
PS&E	PLANS, SPECIFICATIONS AND ESTIMATES
PS, P/S	PRESTRESSED
PSP	PERFORATED STEEL PIPE
PT	POINT OF TANGENCY
PVC	POLYVINYL CHLORIDE
Pvmt	PAVEMENT

Q

Qty	QUANTITY

R

R	RADIUS
R & D	REMOVE AND DISPOSE
R & S	REMOVE AND SALVAGE
R/C	RATE OF CHANGE
RCA	REINFORCED CONCRETE ARCH
RCB	REINFORCED CONCRETE BOX
RCP	REINFORCED CONCRETE PIPE
RCPA	REINFORCED CONCRETE PIPE ARCH
Rd	ROAD
Reinf	REINFORCED,
	REINFORCEMENT,
	REINFORCING
Rel	RELOCATE
Repl	REPLACEMENT
Ret	RETAINING
Rev	REVISED, REVISION
Rdwy	ROADWAY
RHMA	RUBBERIZED HOT MIX ASPHALT
Riv	RIVER
RM	ROAD-MIXED
RP	RADIUS POINT,
	REFERENCE POINT
RR	RAILROAD
RSP	ROCK SLOPE PROTECTION,
	REVISED STANDARD PLAN
Rt	RIGHT
Rte	ROUTE
RW	REDWOOD,
	RETAINING WALL
R/W	RIGHT OF WAY
Rwy	RAILWAY

S

S	SOUTH,
	SUPPLEMENT
SAE	STRUCTURE APPROACH EMBANKMENT
Salv	SALVAGE
SAPP	STRUCTURAL ALUMINUM PLATE PIPE
SB	SOUTHBOUND
SC	SAND CUSHION
SCSP	SLOTTED CORRUGATED STEEL PIPE
SD	STORM DRAIN
Sec	SECOND,
	SECTION
Sep	SEPARATION
SG	SUBGRADE
Shld	SHOULDER
Sht	SHEET
Sim	SIMILAR
℄	STATION LINE
SM	SELECTED MATERIAL
Spec	SPECIAL,
	SPECIFICATIONS
SPP	SLOTTED PLASTIC PIPE
SS	SLOPE STAKE
SSBM	STRAP AND SADDLE BRACKET METHOD
SSD	STRUCTURAL SECTION DRAIN
SSPA	STRUCTURAL STEEL PLATE ARCH
SSPP	STRUCTURAL STEEL PLATE PIPE
SSPPA	STRUCTURAL STEEL PLATE PIPE ARCH
SSRP	STEEL SPIRAL RIB PIPE
St	STREET
Sta	STATION
STBB	SINGLE THRIE BEAM BARRIER
Std	STANDARD
Str	STRUCTURE
Surf	SURFACING
SW	SIDEWALK,
	SOUND WALL
Swr	SEWER
Sym	SYMMETRICAL
S4S	SURFACE 4 SIDES

T

T	SEMI-TANGENT
Tan	TANGENT
TBB	THRIE BEAM BARRIER
Tbr	TIMBER
TC	TOP OF CURB
TCB	TRAFFIC CONTROL BOX
TCE	TEMPORARY CONSTRUCTION EASEMENT
Tel	TELEPHONE
Temp	TEMPORARY
TG	TOP OF GRADE
Tot	TOTAL
TP	TELEPHONE POLE
TPB	TREATED PERMEABLE BASE
TPM	TREATED PERMEABLE MATERIAL
Trans	TRANSITION

T continued

TS	TRANSVERSE,
	TRAFFIC SIGNAL,
	TUBULAR STEEL
Typ	TYPICAL

U

UC	UNDERCROSSING
UD	UNDERDRAIN
UG	UNDERGROUND
UON	UNLESS OTHERWISE NOTED
UP	UNDERPASS

V

V	VALVE,
	DESIGN SPEED
Var	VARIABLE,
	VARIES
VC	VERTICAL CURVE
VCP	VITRIFIED CLAY PIPE
Vert	VERTICAL
Via	VIADUCT
Vol	VOLUME

W

W	WEST,
	WIDTH
WB	WESTBOUND
WH	WEEP HOLE
WM	WIRE MESH
WS	WATER SURFACE
WSP	WELDED STEEL PIPE
Wt	WEIGHT
WV	WATER VALVE
WW	WINGWALL
WWLOL	WINGWALL LAYOUT LINE

X

X Sec	CROSS SECTION
Xing	CROSSING

Y

Yr	YEAR
Yrs	YEARS

Dist	COUNTY	ROUTE	POST MILES TOTAL PROJECT	SHEET No.	TOTAL SHEETS
07	LA	91	R11.3/R20.7	132	192

Grace M. Tsushima
REGISTERED CIVIL ENGINEER

July 19, 2013
PLANS APPROVAL DATE

REGISTERED PROFESSIONAL ENGINEER
Grace M. Tsushima
No. C49814
Exp. 9-30-14
CIVIL
STATE OF CALIFORNIA

THE STATE OF CALIFORNIA OR ITS OFFICERS OR AGENTS SHALL NOT BE RESPONSIBLE FOR THE ACCURACY OR COMPLETENESS OF SCANNED COPIES OF THIS PLAN SHEET.

TO ACCOMPANY PLANS DATED 8-10-15

UNIT OF MEASUREMENT SYMBOLS:

Some of the symbols used in the project plan quantity tables and in the Bid Item List are:

TABLE A

SYMBOL USED	DEFINITIONS
ACRE	ACRE
CF	CUBIC FOOT
CY	CUBIC YARD
EA	EACH
GAL	GALLON
LB	POUND
LF	LINEAR FOOT
SQFT	SQUARE FOOT
SQYD	SQUARE YARD
STA	100 FEET
TAB	TABLET
TON	2,000 POUNDS

Some of the symbols used in the plans other than in the project plan quantity tables are:

TABLE B

SYMBOL USED	DEFINITIONS
ksi	KIPS PER SQUARE INCH
ksf	KIPS PER SQUARE FOOT
psi	POUNDS PER SQUARE INCH
psf	POUNDS PER SQUARE FOOT
lb/ft^3, pcf	POUNDS PER CUBIC FOOT
tsf	TONS PER SQUARE FOOT
mph, MPH *	MILES PER HOUR
ø	NOMINAL DIAMETER
oz	OUNCE
lb	POUND
kip	1,000 POUNDS
cal	CALORIE
ft	FOOT OR FEET
gal	GALLON

* For use on a sign panel only

STATE OF CALIFORNIA
DEPARTMENT OF TRANSPORTATION

ABBREVIATIONS (SHEET 2 OF 2)

NO SCALE

RSP A10B DATED JULY 19, 2013 SUPERSEDES STANDARD PLAN A10B DATED MAY 20, 2011 - PAGE 2 OF THE STANDARD PLANS BOOK DATED 2010.

REVISED STANDARD PLAN RSP A10B

2010 REVISED STANDARD PLAN RSP A10B

6-7-13

Dist	COUNTY	ROUTE	POST MILES TOTAL PROJECT	SHEET No.	TOTAL SHEETS
07	LA	91	R11.3/R20.7	133	192

REGISTERED CIVIL ENGINEER

July 19, 2013
PLANS APPROVAL DATE

REGISTERED PROFESSIONAL ENGINEER Roberta L. McLaughlin No. C40375 Exp. 3-31-15 CIVIL STATE OF CALIFORNIA

THE STATE OF CALIFORNIA OR ITS OFFICERS OR AGENTS SHALL NOT BE RESPONSIBLE FOR THE ACCURACY OR COMPLETENESS OF SCANNED COPIES OF THIS PLAN SHEET.

TO ACCOMPANY PLANS DATED 8-10-15

EXIT RAMP NEUTRAL AREA (GORE) TREATMENT

DETAIL 36

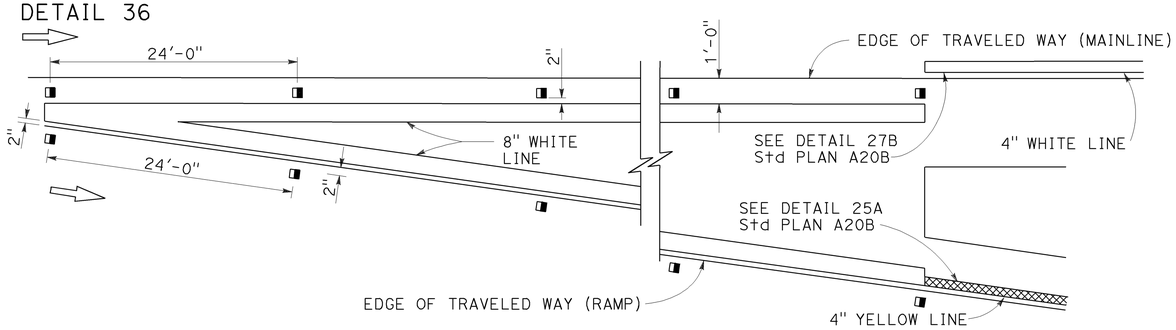

ENTRANCE RAMP NEUTRAL AREA (MERGE) TREATMENT

DETAIL 36A

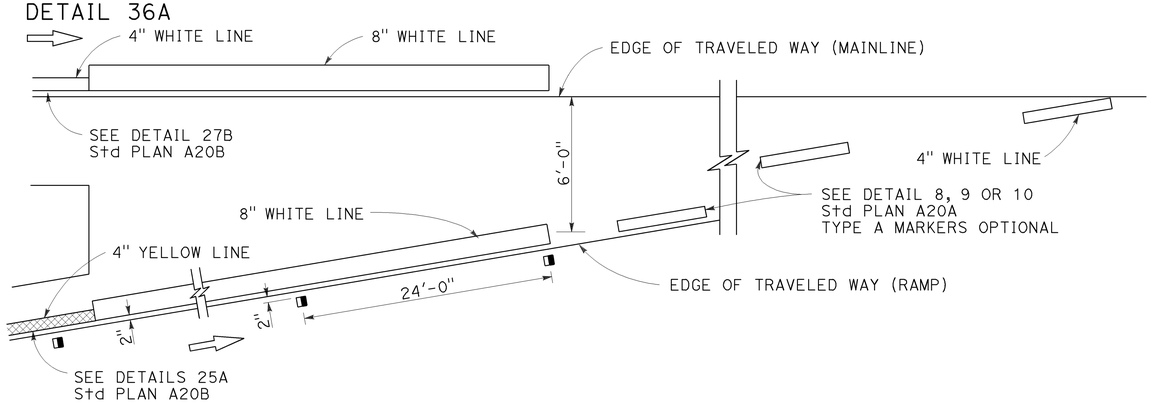

ENTRANCE RAMP NEUTRAL AREA (ACCELERATION LANE) TREATMENT

DETAIL 36B

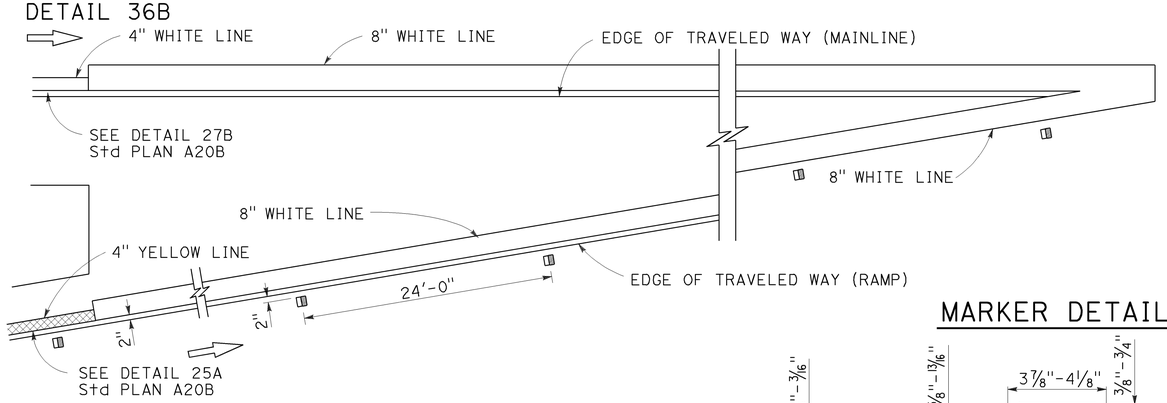

MARKER DETAILS

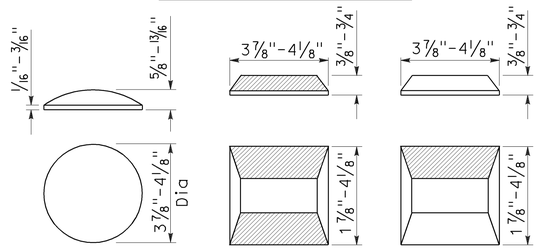

RETROREFLECTIVE FACE

LEGEND:

MARKERS

- ○ TYPE A WHITE NON-REFLECTIVE
- ⊟ TYPE C RED-CLEAR RETROREFLECTIVE
- ◨ TYPE G ONE-WAY CLEAR RETROREFLECTIVE

LANE DROP AT EXIT RAMPS

DETAIL 37

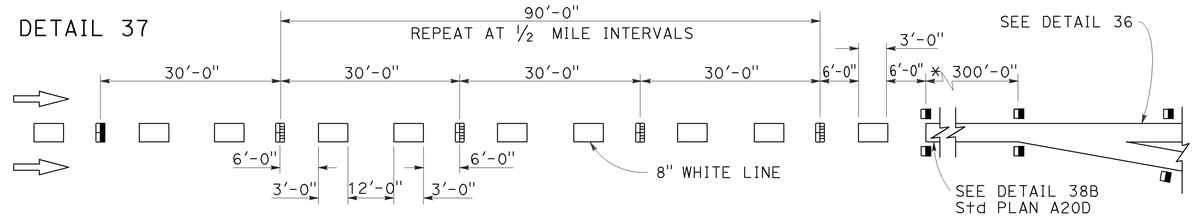

DETAIL 37A

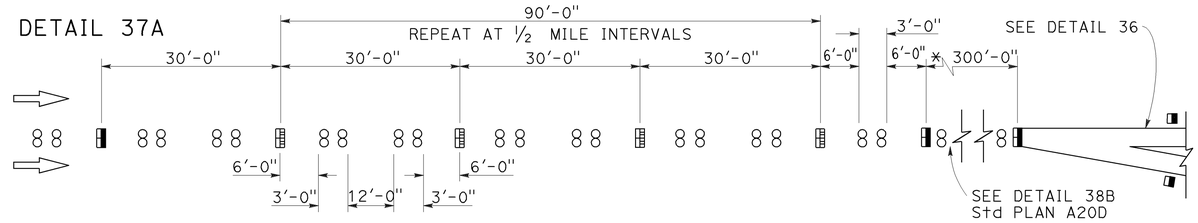

* The solid channelizing line shown may be omitted on short auxiliary lanes where weaving length is critical.

LANE DROP AT INTERSECTIONS

DETAIL 37B

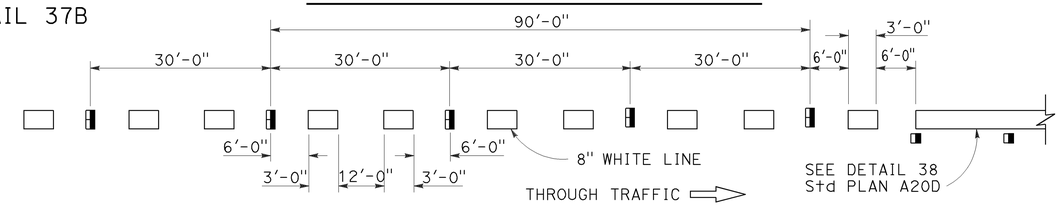

DETAIL 37C

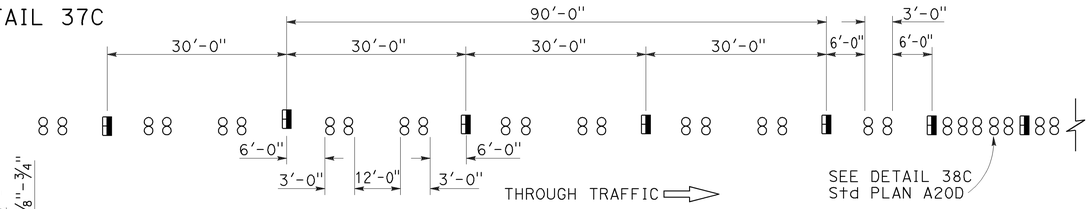

STATE OF CALIFORNIA
DEPARTMENT OF TRANSPORTATION

PAVEMENT MARKERS AND TRAFFIC LINE TYPICAL DETAILS

NO SCALE

RSP A20C DATED JULY 19, 2013 SUPERSEDES STANDARD PLAN A20C DATED MAY 20, 2011 - PAGE 11 OF THE STANDARD PLANS BOOK DATED 2010.

REVISED STANDARD PLAN RSP A20C

2010 REVISED STANDARD PLAN RSP A20C

4-29-13

Dist	COUNTY	ROUTE	POST MILES TOTAL PROJECT	SHEET No.	TOTAL SHEETS
07	LA	91	R11.3/R20.7	134	192

REGISTERED CIVIL ENGINEER

April 20, 2012
PLANS APPROVAL DATE

Roberta L. McLaughlin No. C40375 Exp. 3-31-13 CIVIL STATE OF CALIFORNIA REGISTERED PROFESSIONAL ENGINEER

THE STATE OF CALIFORNIA OR ITS OFFICERS OR AGENTS SHALL NOT BE RESPONSIBLE FOR THE ACCURACY OR COMPLETENESS OF SCANNED COPIES OF THIS PLAN SHEET.

TO ACCOMPANY PLANS DATED 8-10-15

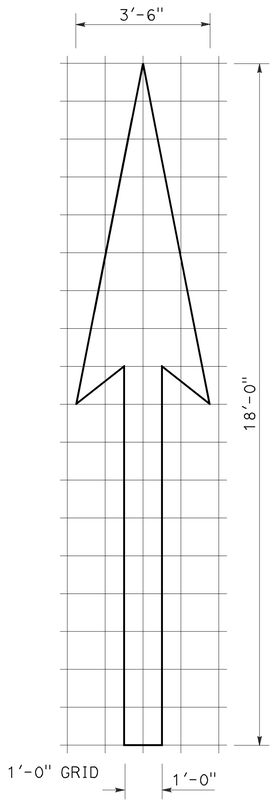

A=25 ft^2

TYPE I 18'-0" ARROW

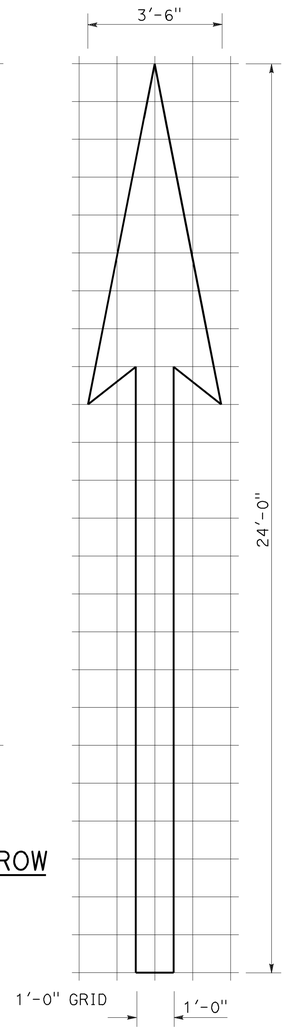

A=31 ft^2

TYPE I 24'-0" ARROW

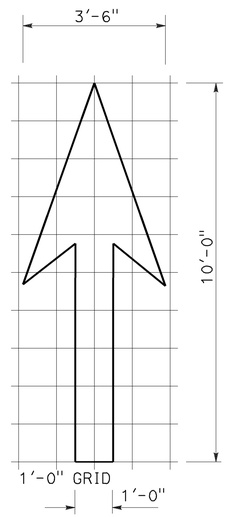

A=14 ft^2

TYPE I 10'-0" ARROW

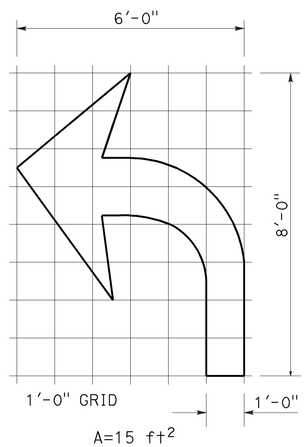

A=15 ft^2

TYPE IV (L) ARROW

(For Type IV (R) arrow, use mirror image)

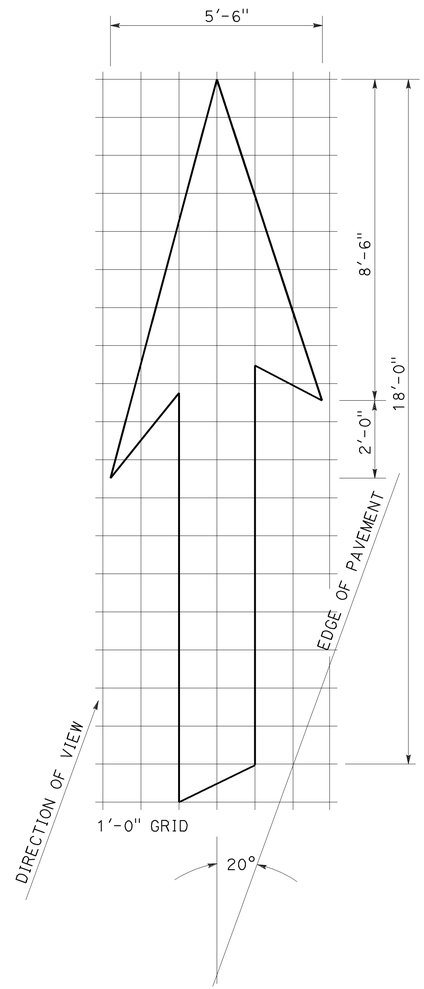

A=42 ft^2

TYPE VI ARROW

Right lane drop arrow
(For left lane, use mirror image)

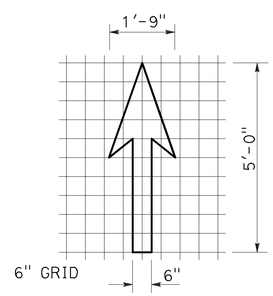

A=3.5 ft^2

BIKE LANE ARROW

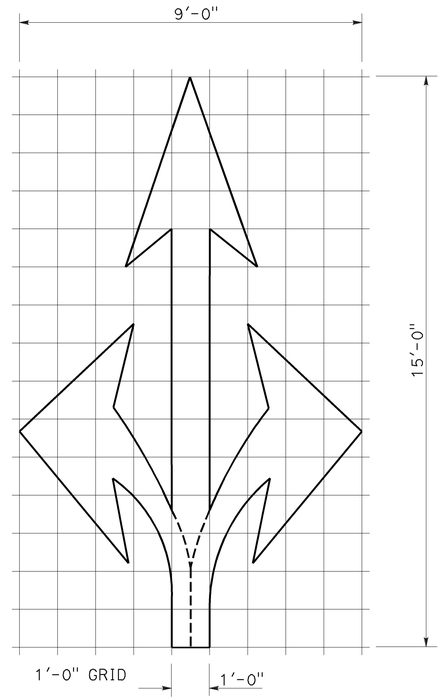

A=36 ft^2

TYPE VIII ARROW

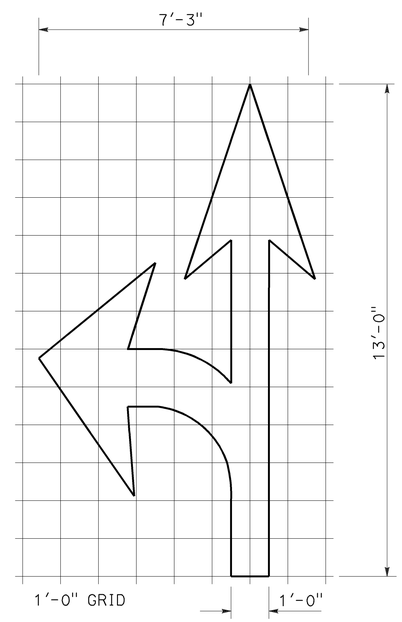

A=27 ft^2

TYPE VII (L) ARROW

(For Type VII (R) arrow, use mirror image)

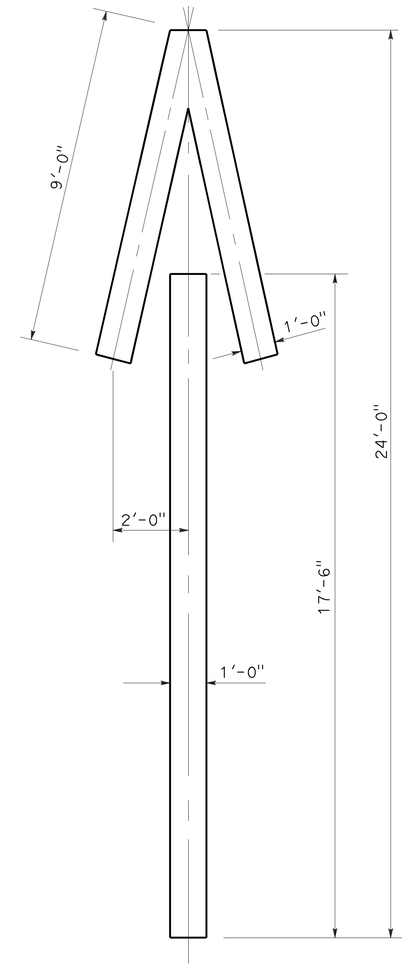

A=33 ft^2

TYPE V ARROW

NOTE:
Minor variations in dimensions may be accepted by the Engineer.

STATE OF CALIFORNIA
DEPARTMENT OF TRANSPORTATION

PAVEMENT MARKINGS ARROWS

NO SCALE

RSP A24A DATED APRIL 20, 2012 SUPERSEDES STANDARD PLAN A24A DATED MAY 20, 2011 - PAGE 13 OF THE STANDARD PLANS BOOK DATED 2010.

REVISED STANDARD PLAN RSP A24A

2010 REVISED STANDARD PLAN RSP A24A

3-14-12

Dist	COUNTY	ROUTE	POST MILES TOTAL PROJECT	SHEET No.	TOTAL SHEETS
07	LA	91	R11.3/R20.7	135	192

REGISTERED CIVIL ENGINEER

October 19, 2012
PLANS APPROVAL DATE

REGISTERED PROFESSIONAL ENGINEER
Roberta L. McLaughlin
No. C40375
Exp. 3-31-13
CIVIL
STATE OF CALIFORNIA

THE STATE OF CALIFORNIA OR ITS OFFICERS OR AGENTS SHALL NOT BE RESPONSIBLE FOR THE ACCURACY OR COMPLETENESS OF SCANNED COPIES OF THIS PLAN SHEET.

NOTE: TO ACCOMPANY PLANS DATED 8-10-15

Minor variations in dimensions may be accepted by the Engineer.

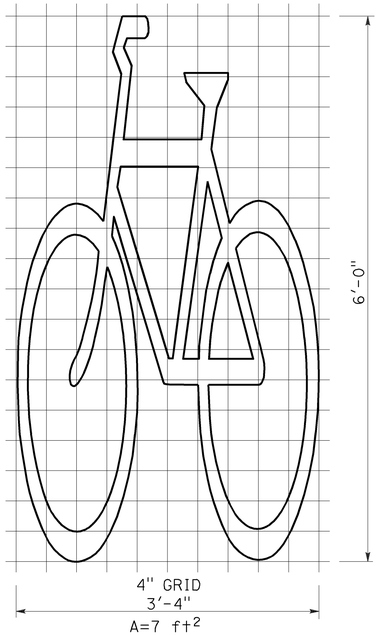

BIKE LANE SYMBOL WITHOUT PERSON

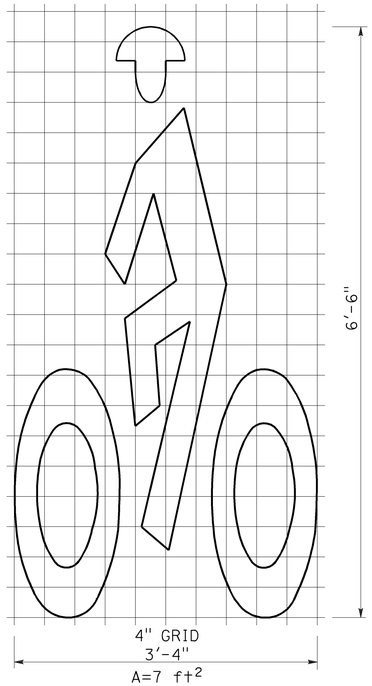

BIKE LANE SYMBOL WITH PERSON

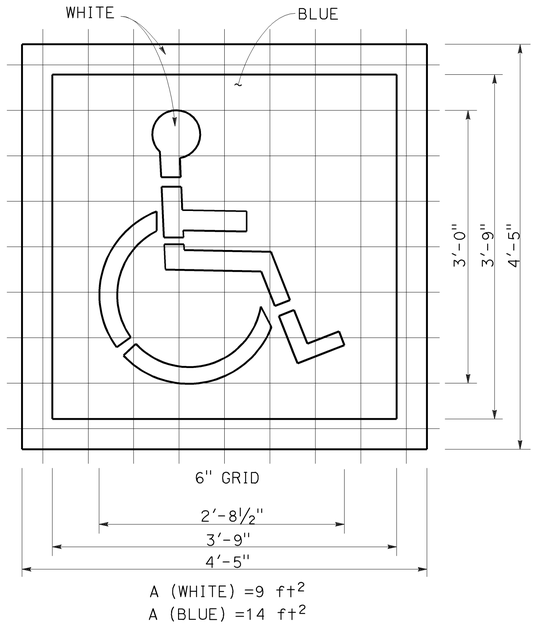

INTERNATIONAL SYMBOL OF ACCESSIBILITY (ISA) MARKING

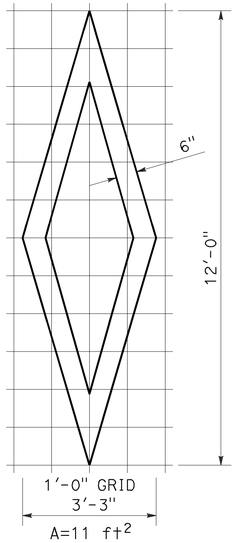

DIAMOND SYMBOL

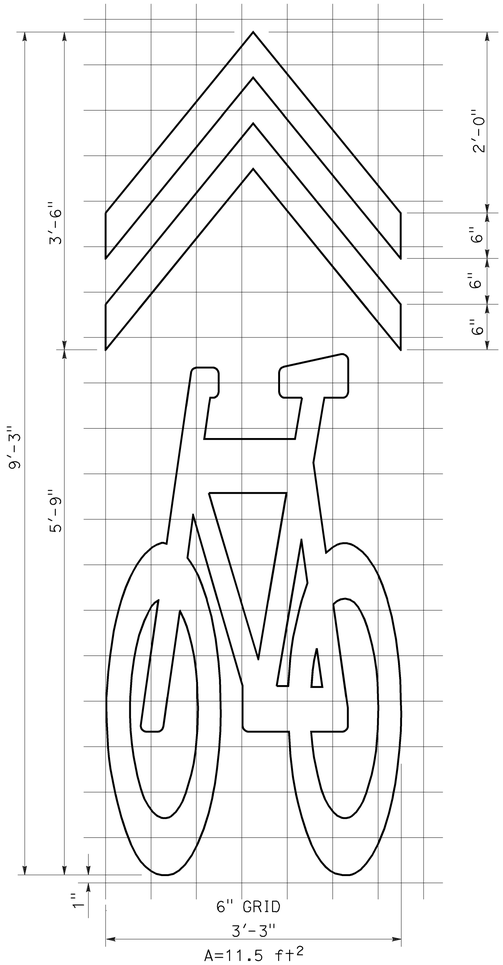

SHARED ROADWAY BICYCLE MARKING

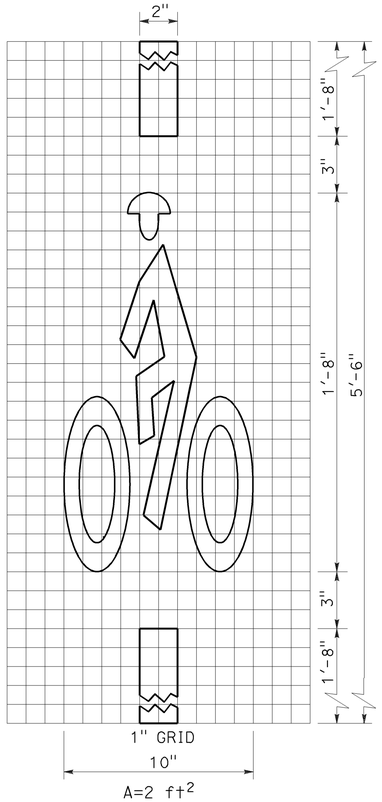

BICYCLE LOOP DETECTOR SYMBOL

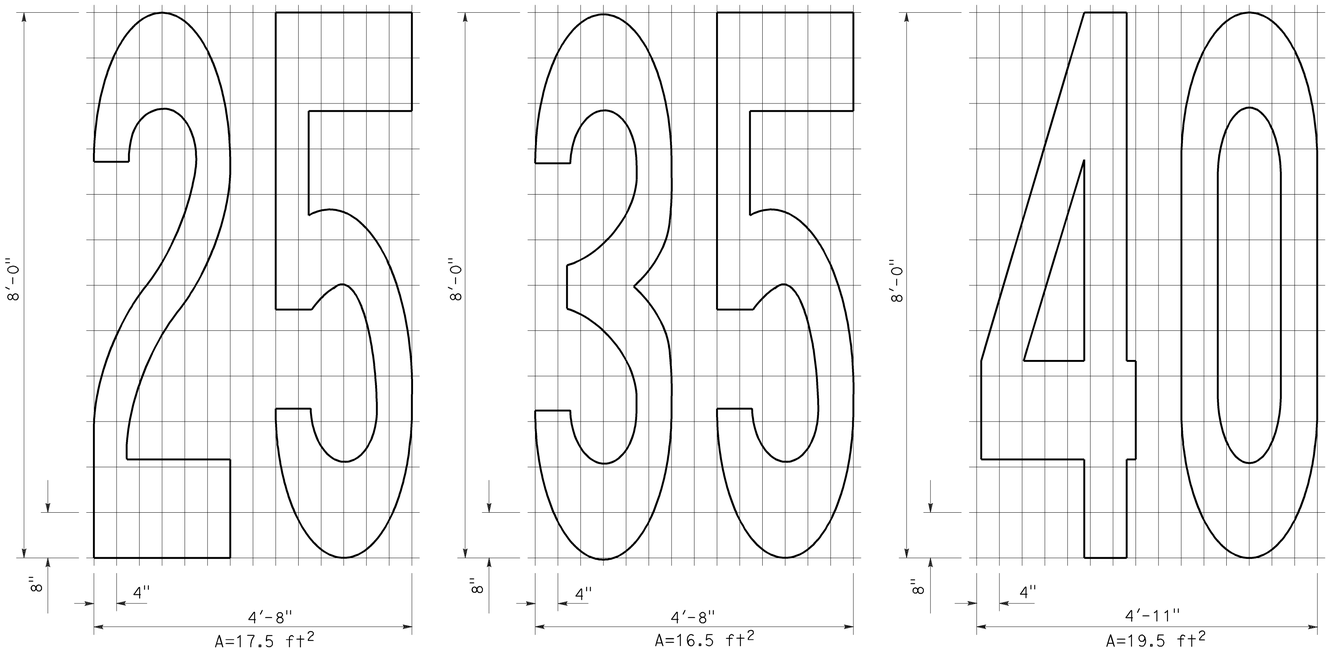

NUMERALS

STATE OF CALIFORNIA
DEPARTMENT OF TRANSPORTATION

PAVEMENT MARKINGS SYMBOLS AND NUMERALS

NO SCALE

RSP A24C DATED OCTOBER 19, 2012 SUPERSEDES STANDARD PLAN A24C DATED MAY 20, 2011 - PAGE 15 OF THE STANDARD PLANS BOOK DATED 2010.

REVISED STANDARD PLAN RSP A24C

2010 REVISED STANDARD PLAN RSP A24C

6-28-12

Dist	COUNTY	ROUTE	POST MILES TOTAL PROJECT	SHEET No.	TOTAL SHEETS
07	LA	91	R11.3/R20.7	136	192

REGISTERED CIVIL ENGINEER

July 20, 2012
PLANS APPROVAL DATE

REGISTERED PROFESSIONAL ENGINEER
Roberta L. McLaughlin
No. C40375
Exp. 3-31-13
CIVIL
STATE OF CALIFORNIA

THE STATE OF CALIFORNIA OR ITS OFFICERS OR AGENTS SHALL NOT BE RESPONSIBLE FOR THE ACCURACY OR COMPLETENESS OF SCANNED COPIES OF THIS PLAN SHEET.

TO ACCOMPANY PLANS DATED 8-10-15

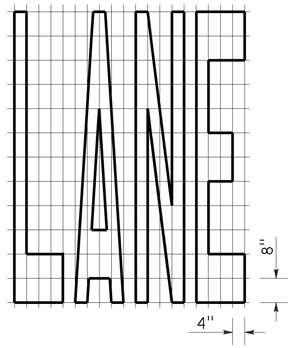

A=24 ft^2

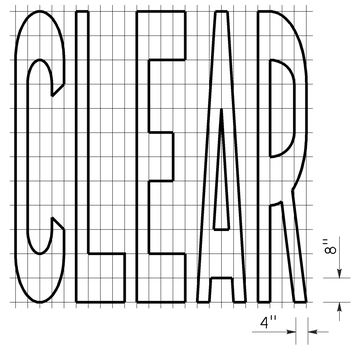

A=27 ft^2

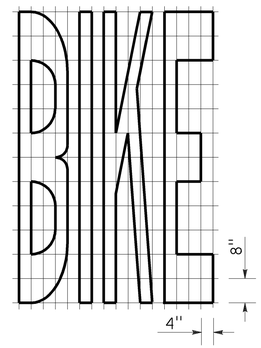

A=21 ft^2

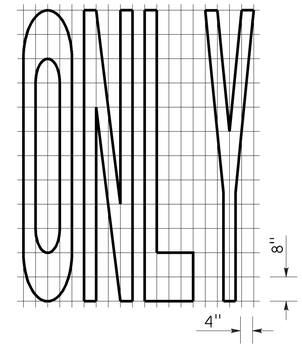

A=22 ft^2

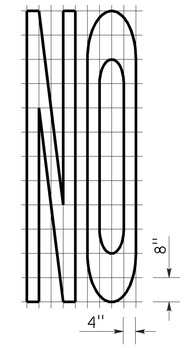

A=14 ft^2

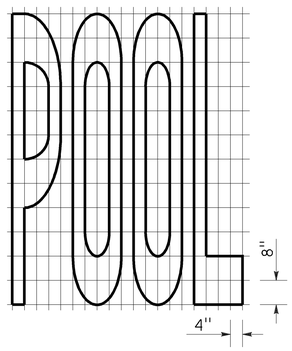

A=23 ft^2

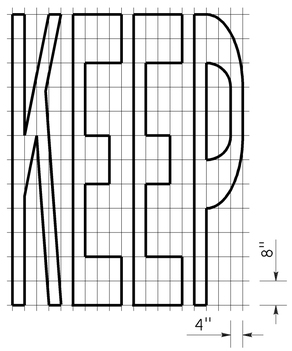

A=24 ft^2

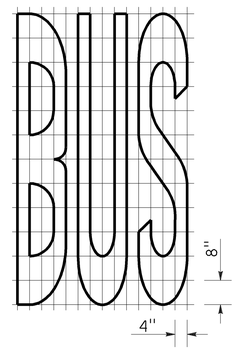

A=20 ft^2

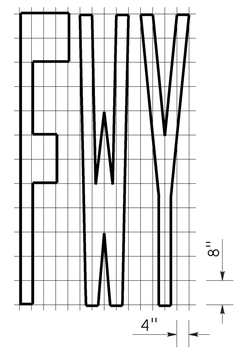

A=16 ft^2

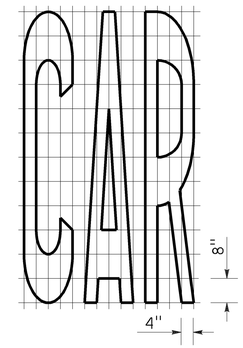

A=17 ft^2

WORD MARKINGS			
ITEM	ft^2	ITEM	ft^2
LANE	24	NO	14
POOL	23	BIKE	21
CAR	17	BUS	20
CLEAR	27	ONLY	22
KEEP	24	FWY	16

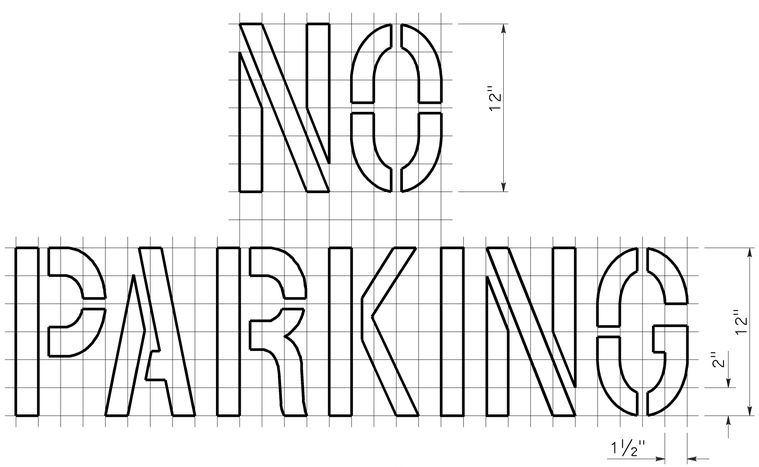

A=2 ft^2
See Notes 6 and 7

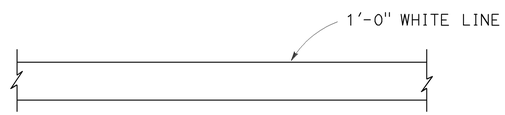

LIMIT LINE (STOP LINE)

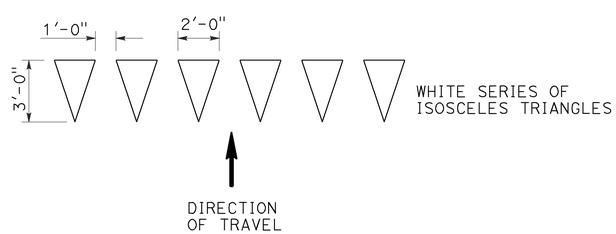

YIELD LINE

NOTES:

1. If a message consists of more than one word, it should read "UP", i.e., the first word should be nearest the driver.
2. The space between words should be at least four times the height of the characters for low speed roads, but not more than ten times the height of the characters. The space may be reduced appropriately where there is limited space because of local conditions.
3. Minor variations in dimensions may be accepted by the Engineer.
4. Portions of a letter, number or symbol may be separated by connecting segments not to exceed 2" in width.
5. The words "NO PARKING" pavement marking is to be used for parking facilities. For typical locations of markings, see Standard Plans A90A and A90B.
6. The words "NO PARKING", shall be painted in white letters no less than 1'-0" high on a contrasting background and located so that it is visible to traffic enforcement officials.

STATE OF CALIFORNIA
DEPARTMENT OF TRANSPORTATION

PAVEMENT MARKINGS WORDS, LIMIT AND YIELD LINES

NO SCALE

RSP A24E DATED JULY 20, 2012 SUPERSEDES STANDARD PLAN A24E
DATED MAY 20, 2011 - PAGE 17 OF THE STANDARD PLANS BOOK DATED 2010.

REVISED STANDARD PLAN RSP A24E

2010 REVISED STANDARD PLAN RSP A24E

6-12-12

Dist	COUNTY	ROUTE	POST MILES TOTAL PROJECT	SHEET No.	TOTAL SHEETS
07	LA	91	R11.3/R20.7	137	192

REGISTERED CIVIL ENGINEER

July 20, 2012
PLANS APPROVAL DATE

REGISTERED PROFESSIONAL ENGINEER
Roberta L. McLaughlin
No. C40375
Exp. 3-31-13
CIVIL
STATE OF CALIFORNIA

THE STATE OF CALIFORNIA OR ITS OFFICERS OR AGENTS SHALL NOT BE RESPONSIBLE FOR THE ACCURACY OR COMPLETENESS OF SCANNED COPIES OF THIS PLAN SHEET.

TO ACCOMPANY PLANS DATED 8-10-15

2010 REVISED STANDARD PLAN RSP A24F

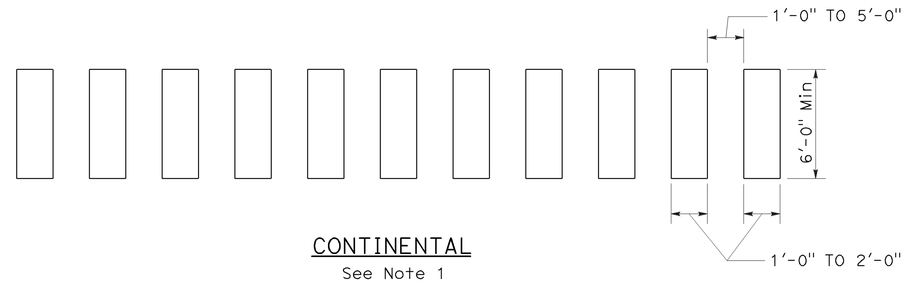

CONTINENTAL
See Note 1

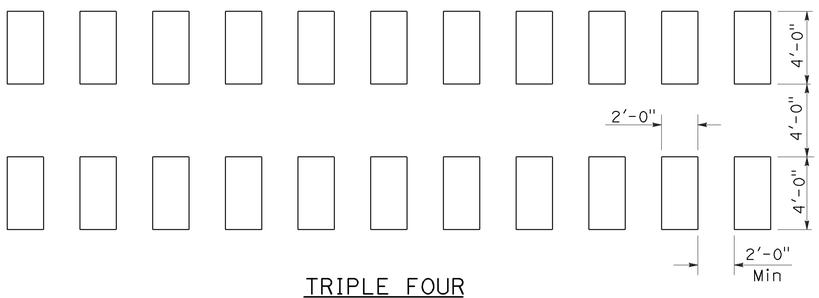

TRIPLE FOUR
See Note 1

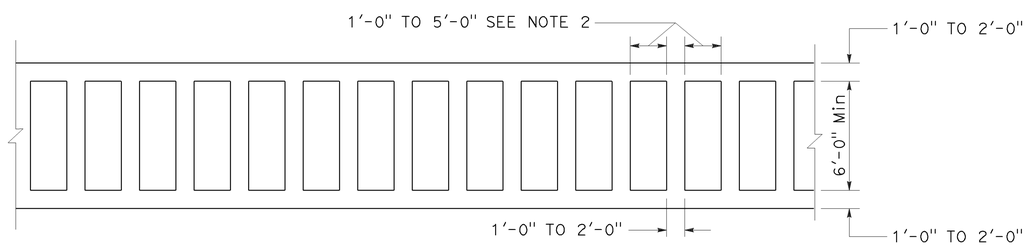

LADDER

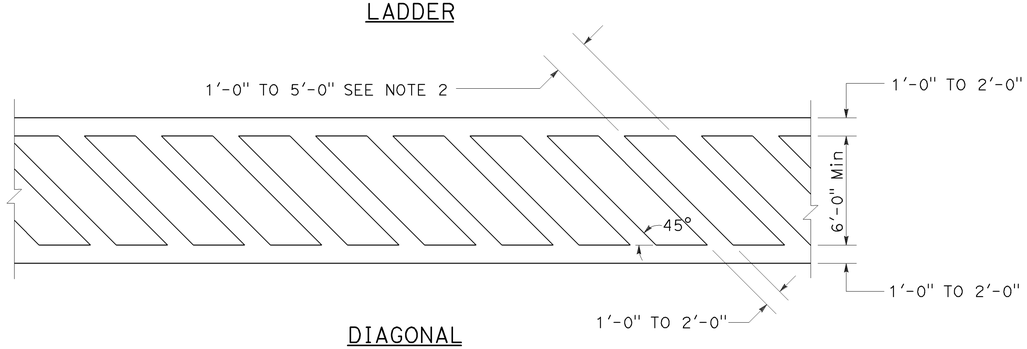

DIAGONAL

HIGHER VISIBILITY CROSSWALKS

NOTES:

1. Spaces between markings should be placed in wheel tracks of each lane.
2. Spacings not to exceed 2.5 times width of longitudinal line.
3. All crosswalk markings must be white except for those near schools must be yellow.

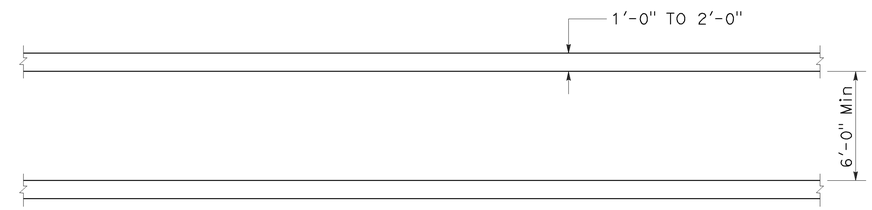

BASIC

STATE OF CALIFORNIA
DEPARTMENT OF TRANSPORTATION

PAVEMENT MARKINGS CROSSWALKS

NO SCALE

RSP A24F DATED JULY 20, 2012 SUPPLEMENTS THE STANDARD PLANS BOOK DATED 2010.

REVISED STANDARD PLAN RSP A24F

Dist	COUNTY	ROUTE	POST MILES TOTAL PROJECT	SHEET No.	TOTAL SHEETS
07	LA	91	R11.3/R20.7	138	192

Randell D. Hiatt
REGISTERED CIVIL ENGINEER

July 19, 2013
PLANS APPROVAL DATE

REGISTERED PROFESSIONAL ENGINEER
Randell D. Hiatt
No. C50200
Exp. 6-30-15
CIVIL
STATE OF CALIFORNIA

THE STATE OF CALIFORNIA OR ITS OFFICERS OR AGENTS SHALL NOT BE RESPONSIBLE FOR THE ACCURACY OR COMPLETENESS OF SCANNED COPIES OF THIS PLAN SHEET.

TO ACCOMPANY PLANS DATED 8-10-15

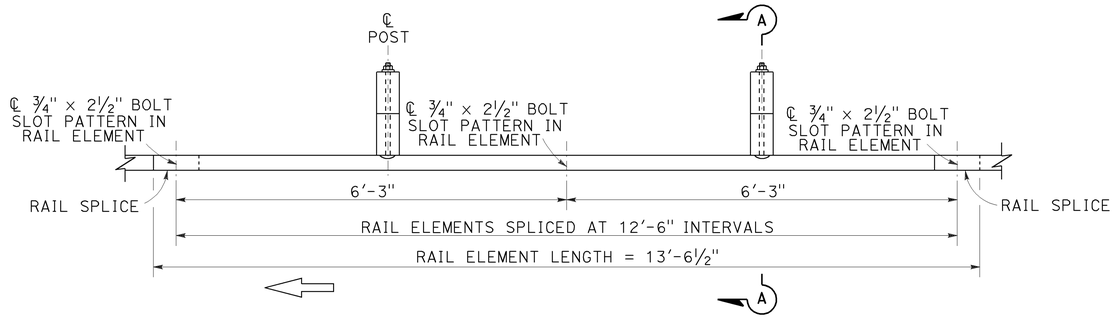

PLAN

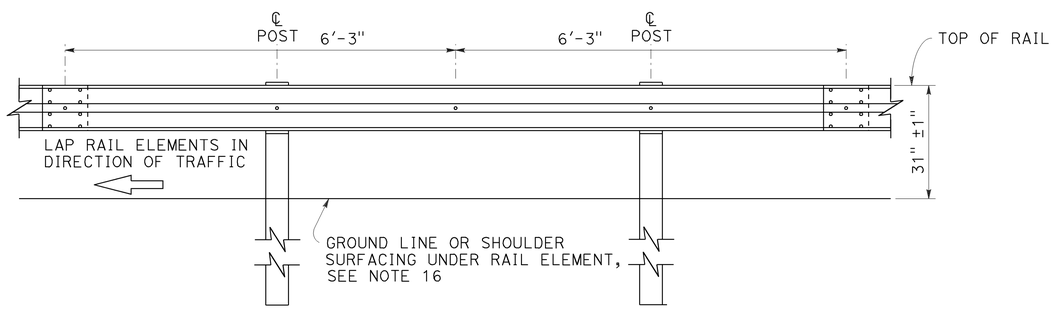

ELEVATION

MIDWEST GUARDRAIL SYSTEM WITH WOOD POST AND BLOCKS

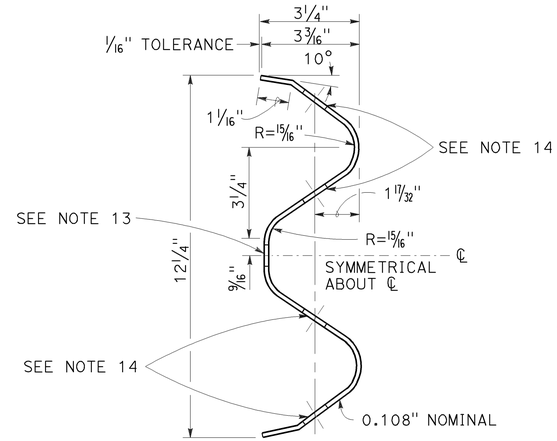

SECTION THRU RAIL ELEMENT

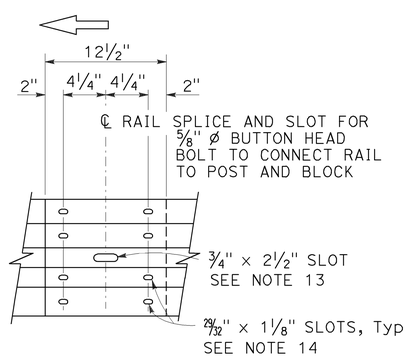

ELEVATION

RAIL ELEMENT SPLICE DETAIL

a) Connect the over lapped end of the rail elements with ⅝" ø × 1⅜" button head oval shoulder splice bolts inserted into the 29⁄32" × 1⅛" slots and bolted together with ⅝" ø recessed hex nuts. Recess of hex nut points toward rail element. A total of 8 bolts and nuts are to be used at each rail splice connection.

b) The ends of the rail elements are to be overlapped in the direction of traffic (see details).

c) Where end cap is to be attached to the end of a rail element, a total of 4 of the above described splice bolts and nuts are to be used.

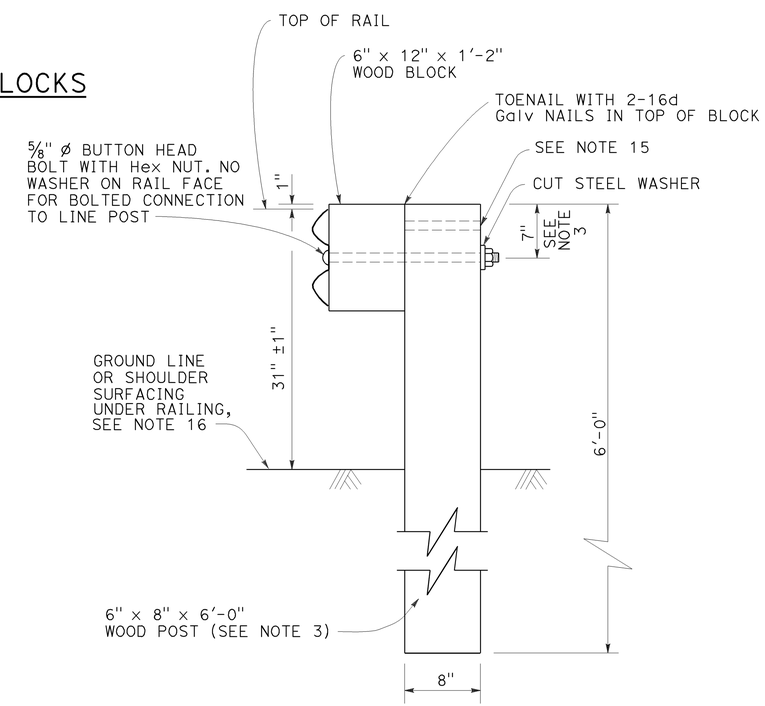

SECTION A-A

TYPICAL WOOD LINE POST INSTALLATION

See Note 4

NOTES:

1. For details of steel post installations, see Revised Standard Plan RSP A77L2.
2. For details of standard hardware used to construct MGS, see Revised Standard Plan RSP A77M1.
3. For details of wood posts and wood blocks used to construct MGS, see Revised Standard Plan RSP A77N1.
4. For additional installation details, see Revised Standard Plan RSP A77N3.
5. MGS post spacing to be 6'-3" center to center, except as otherwise noted.
6. For MGS typical layouts, see the A77P, A77Q and A77R Series of Standard Plans.
7. If railing is connected to terminal system end treatment, use 31" height terminal system end treatment.
8. For MGS end anchor details, see Revised Standard Plans RSP A77S1 and RSP A77T2.
9. For details of MGS transition to bridge railing, see Revised Standard Plan RSP A77U4.
10. For additional details of MSG connection to bridge railing, see Revised Standard Plans RSP A77U1, RSP A77U2 and RSP A77V1.
11. For MGS connection details to abutments and walls, see Revised Standard Plan RSP A77U3.
12. For typical MGS delineation and dike positioning details, see Revised Standard Plan RSP A77N4.
13. Slotted hole for bolted connection of rail element to block and post. See "Section Thru Rail Element".
14. Slotted holes for splice bolts to overlap ends of rail element. See "Section Thru Rail Element".
15. Additional hole in uppermost portion of line post is for potential future adjustments of railing height. See Revised Standard Plan RSP A77N1.
16. Install posts in soil.

STATE OF CALIFORNIA
DEPARTMENT OF TRANSPORTATION

MIDWEST GUARDRAIL SYSTEM STANDARD RAILING SECTION (WOOD POST WITH WOOD BLOCK)

NO SCALE

RSP A77L1 DATED JULY 19, 2013 SUPPLEMENTS STANDARD PLANS BOOK DATED 2010.

REVISED STANDARD PLAN RSP A77L1

2010 REVISED STANDARD PLAN RSP A77L1

7-3-13

Dist	COUNTY	ROUTE	POST MILES TOTAL PROJECT	SHEET No.	TOTAL SHEETS
07	LA	91	R11.3/R20.7	139	192

Randell D. Hiatt
REGISTERED CIVIL ENGINEER

July 19, 2013
PLANS APPROVAL DATE

REGISTERED PROFESSIONAL ENGINEER
Randell D. Hiatt
No. C50200
Exp. 6-30-15
CIVIL
STATE OF CALIFORNIA

THE STATE OF CALIFORNIA OR ITS OFFICERS OR AGENTS SHALL NOT BE RESPONSIBLE FOR THE ACCURACY OR COMPLETENESS OF SCANNED COPIES OF THIS PLAN SHEET.

TO ACCOMPANY PLANS DATED 8-10-15

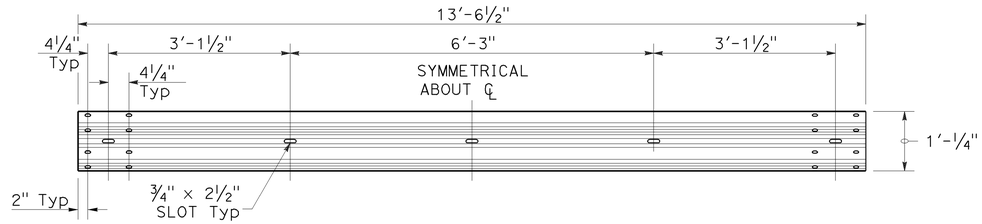

TYPICAL RAIL ELEMENT

NOTE:

1. Slotted holes for splice bolts to overlap ends of rail element.

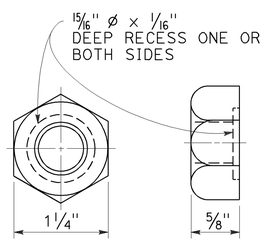

⅝" ø RECESS NUT

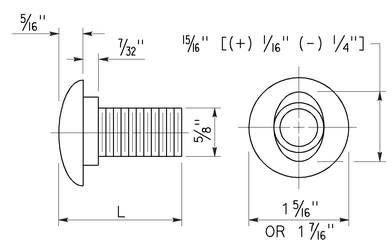

⅝" ø BUTTON HEAD BOLT

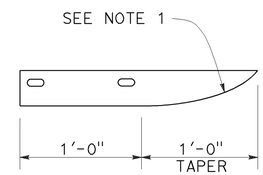

PLAN

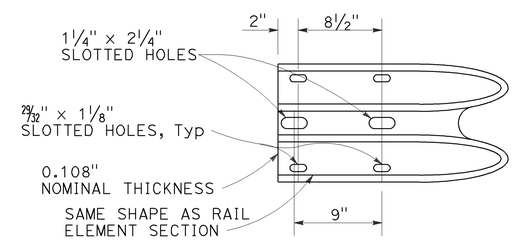

ELEVATION

END CAP
(TYPE A)

BUTTON HEAD BOLT

L	THREAD LENGTH
1⅜"	FULL THREAD LENGTH
2"	FULL THREAD LENGTH
10"	4" Min THREAD LENGTH
18"	4" Min THREAD LENGTH
20"	4" Min THREAD LENGTH
22"	4" Min THREAD LENGTH
26"	4" Min THREAD LENGTH
36"	4" Min THREAD LENGTH
** 2¾"	2" Min THREAD LENGTH
** 19"	4" Min THREAD LENGTH

** For nested rail applications.

STATE OF CALIFORNIA
DEPARTMENT OF TRANSPORTATION

MIDWEST GUARDRAIL SYSTEM STANDARD HARDWARE

NO SCALE

RSP A77M1 DATED JULY 19, 2013 SUPPLEMENTS THE STANDARD PLANS BOOK DATED 2010.

REVISED STANDARD PLAN RSP A77M1

2010 REVISED STANDARD PLAN RSP A77M1

Dist	COUNTY	ROUTE	POST MILES TOTAL PROJECT	SHEET No.	TOTAL SHEETS
07	LA	91	R11.3/R20.7	140	192

Randell D. Hiatt
REGISTERED CIVIL ENGINEER

July 19, 2013
PLANS APPROVAL DATE

REGISTERED PROFESSIONAL ENGINEER
Randell D. Hiatt
No. C50200
Exp. 6-30-15
CIVIL
STATE OF CALIFORNIA

THE STATE OF CALIFORNIA OR ITS OFFICERS OR AGENTS SHALL NOT BE RESPONSIBLE FOR THE ACCURACY OR COMPLETENESS OF SCANNED COPIES OF THIS PLAN SHEET.

TO ACCOMPANY PLANS DATED 8-10-15

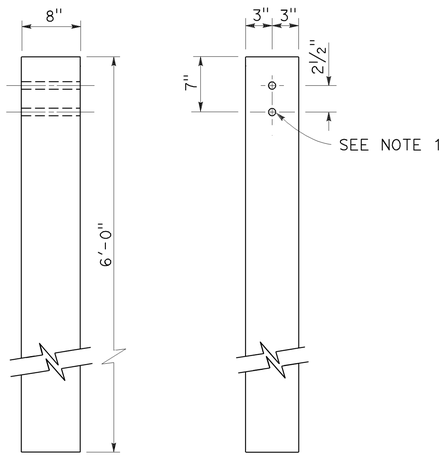

SIDE FRONT

6" x 8" WOOD POST
See Note 3

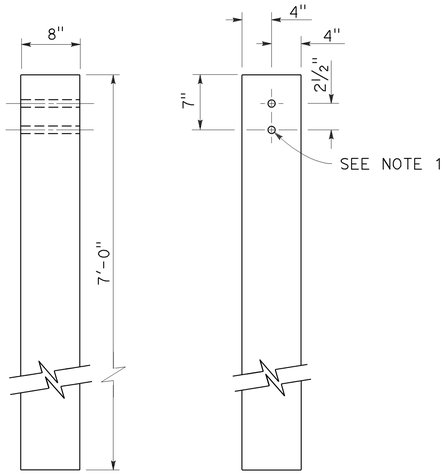

SIDE FRONT

8" x 8" WOOD POST
See Note 4

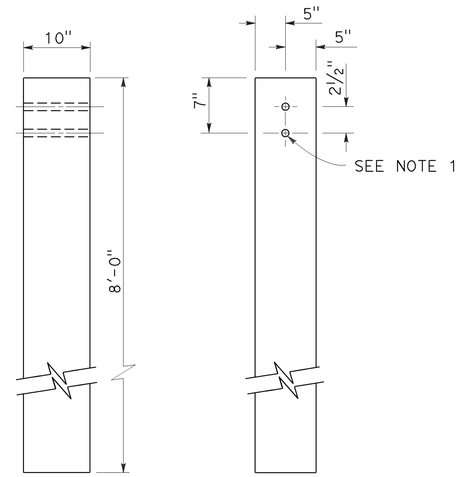

SIDE FRONT

10" x 10" WOOD POST
See Note 5

NOTES:

1. All holes in wood posts and blocks shall be ¾" Dia ± 1/16".
2. Dimensions shown for wood post are nominal.
3. This post and block combination used for standard line post sections of MGS.
4. This post and 8" x 12" block combination used for line post sections of MGS on narrow roadways.
5. This post and 8" x 12" block combination is typically used where strengthened line post sections of MGS are warranted to shield fixed objects.
6. See Revised Standard Plan RSP A77L3 for use of 6" x 8" and 8" x 8" wood blocks.

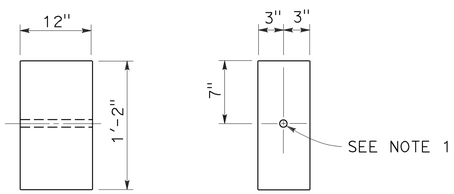

SIDE FRONT

6" x 12" WOOD BLOCK
See Note 3

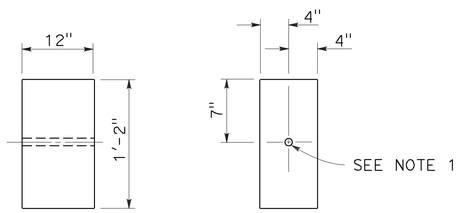

SIDE FRONT

8" x 12" WOOD BLOCK

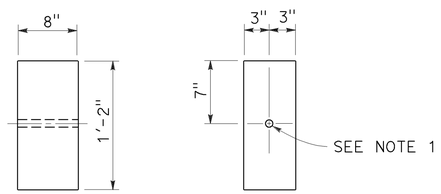

SIDE FRONT

6" x 8" WOOD BLOCK
Only for use with metal beam guard rail see Note 6

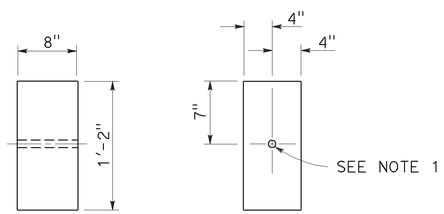

SIDE FRONT

8" x 8" WOOD BLOCK
Only for use with metal beam guard rail see Note 6

STATE OF CALIFORNIA
DEPARTMENT OF TRANSPORTATION

MIDWEST GUARDRAIL SYSTEM WOOD POST AND WOOD BLOCK DETAILS

NO SCALE

RSP A77N1 DATED JULY 19, 2013 SUPPLEMENTS THE STANDARD PLANS BOOK DATED 2010.

REVISED STANDARD PLAN RSP A77N1

2010 REVISED STANDARD PLAN RSP A77N1

7-3-13

Dist	COUNTY	ROUTE	POST MILES TOTAL PROJECT	SHEET No.	TOTAL SHEETS
07	LA	91	R11.3/R20.7	141	192

Randell D. Hiatt
REGISTERED CIVIL ENGINEER

November 15, 2013
PLANS APPROVAL DATE

REGISTERED PROFESSIONAL ENGINEER
Randell D. Hiatt
No. C50200
Exp. 6-30-15
CIVIL
STATE OF CALIFORNIA

THE STATE OF CALIFORNIA OR ITS OFFICERS OR AGENTS SHALL NOT BE RESPONSIBLE FOR THE ACCURACY OR COMPLETENESS OF SCANNED COPIES OF THIS PLAN SHEET.

TO ACCOMPANY PLANS DATED 8-10-15

2010 REVISED STANDARD PLAN RSP A77N3

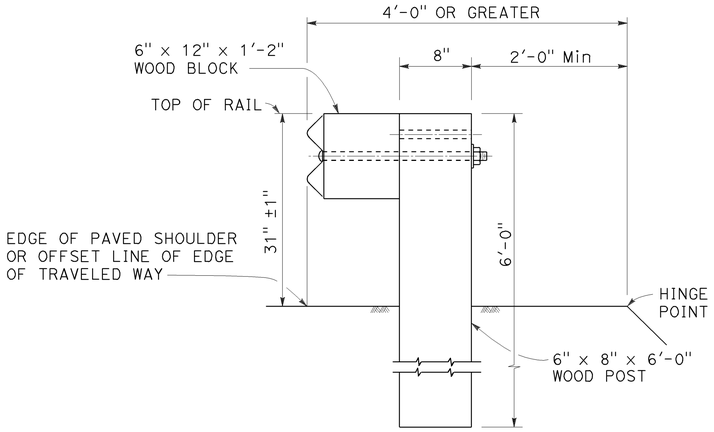

DETAIL A

TYPICAL ROADWAY INSTALLATION

See Note 1

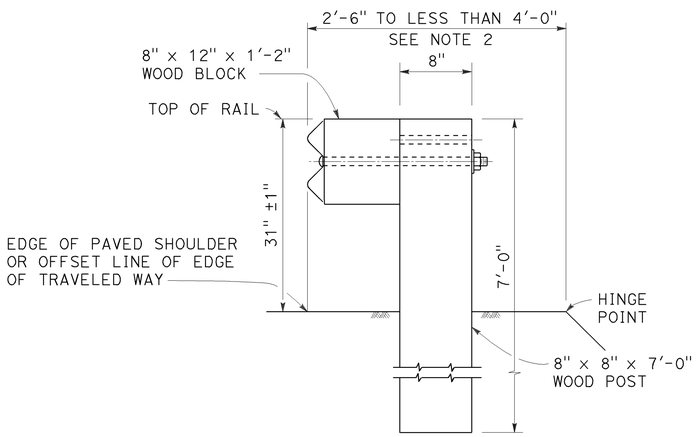

DETAIL B

NARROW ROADWAY INSTALLATION

See Note 1

POST EMBEDMENT

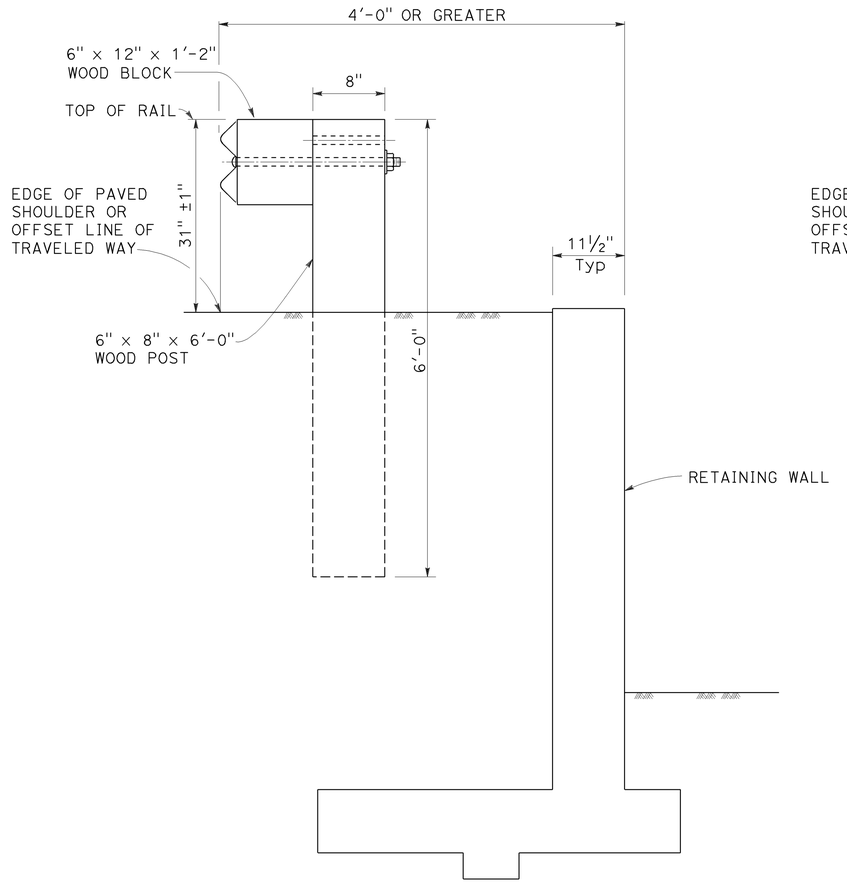

DETAIL C

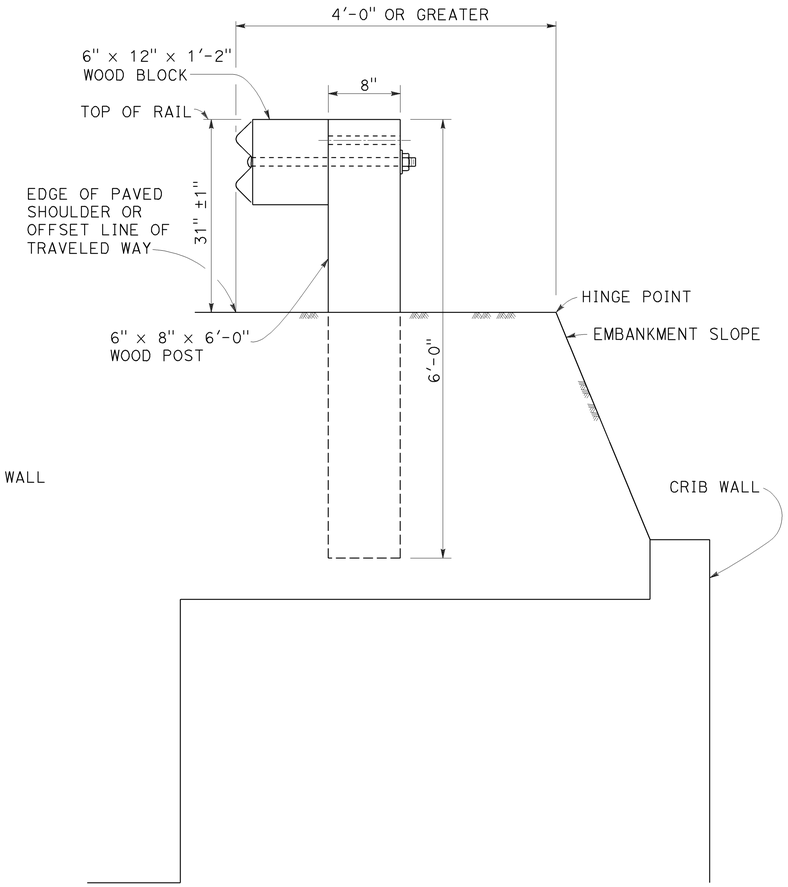

DETAIL D

INSTALLATION AT EARTH RETAINING WALLS

NOTES:

1. These installation details also applicable to steel line post installations. For Detail A, C, and D, where steel line post installations are constructed, W6 x 8.5 or W6 x 9 steel post, 6'-0" in length, with 6" x 12" x 1'-2" notched wood blocks or notched recycled plastic blocks are to be used in place of the size of wood post and wood block shown. For Detail B, where steel line post installations are constructed, W6 x 15 steel post, 8'-0" in length, with 8" x 12" x 1'-2" notched wood blocks or notched recycled plastic blocks are to be used in place of the size of wood post and wood block shown. For additional installation details, see Revised Standard Plan RSP A77L1 and RSP A77L2.
2. Where the distance between the face of the rail and the hinge point is less than 2'-6", see the Project Plans for special details.
3. For dike positioning with MGS installations, see Revised Standard Plan RSP A77N4.

STATE OF CALIFORNIA
DEPARTMENT OF TRANSPORTATION

MIDWEST GUARDRAIL SYSTEM TYPICAL LINE POST EMBEDMENT AND HINGE POINT OFFSET DETAILS

NO SCALE

RSP A77N3 DATED NOVEMBER 15, 2013 SUPERSEDES RSP A77N3
DATED JULY 19, 2013 THAT SUPPLEMENTS THE STANDARD PLANS BOOK DATED 2010.

REVISED STANDARD PLAN RSP A77N3

Dist	COUNTY	ROUTE	POST MILES TOTAL PROJECT	SHEET No.	TOTAL SHEETS
07	LA	91	R11.3/R20.7	142	192

Randell D. Hiatt
REGISTERED CIVIL ENGINEER

July 19, 2013
PLANS APPROVAL DATE

REGISTERED PROFESSIONAL ENGINEER
Randell D. Hiatt
No. C50200
Exp. 6-30-15
CIVIL
STATE OF CALIFORNIA

THE STATE OF CALIFORNIA OR ITS OFFICERS OR AGENTS SHALL NOT BE RESPONSIBLE FOR THE ACCURACY OR COMPLETENESS OF SCANNED COPIES OF THIS PLAN SHEET.

TO ACCOMPANY PLANS DATED 8-10-15

NOTES:

1. When necessary to place dike more than 7" in front of face of MGS, only Type C dike may be used. For dike details, see Revised Standard Plan RSP A87B.
2. For standard railing post embedment, see Revised Standard Plan RSP A77N3.
3. MGS delineation to be used where shown on the Project Plans.
4. When dike or curb is placed under MGS, the maximum height of the dike or curb shall be 6". Mountable dike should not be used. For dike and curb details, see Revised Standard Plans RSP A87A and RSP A87B.
5. For details of typical distance between the face of rail and hinge point, see Revised Standard Plan RSP A77N3.
6. For steel line posts, use 1/4 - 20 self-tapping screws in 0.22" diameter holes or 1/4" bolts in 9/32" diameter holes.

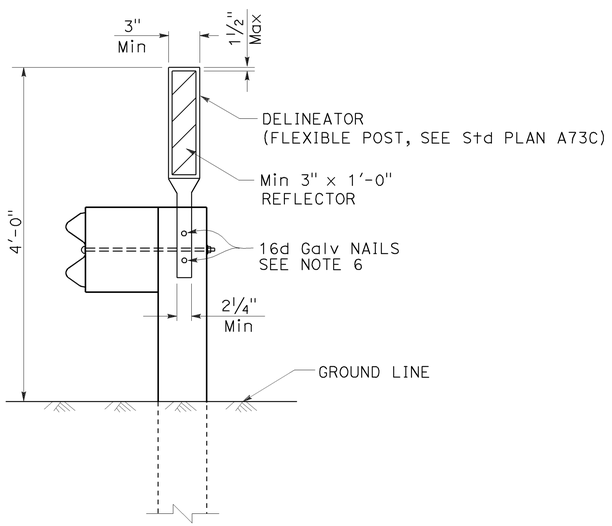

MGS DELINEATION

See Note 3

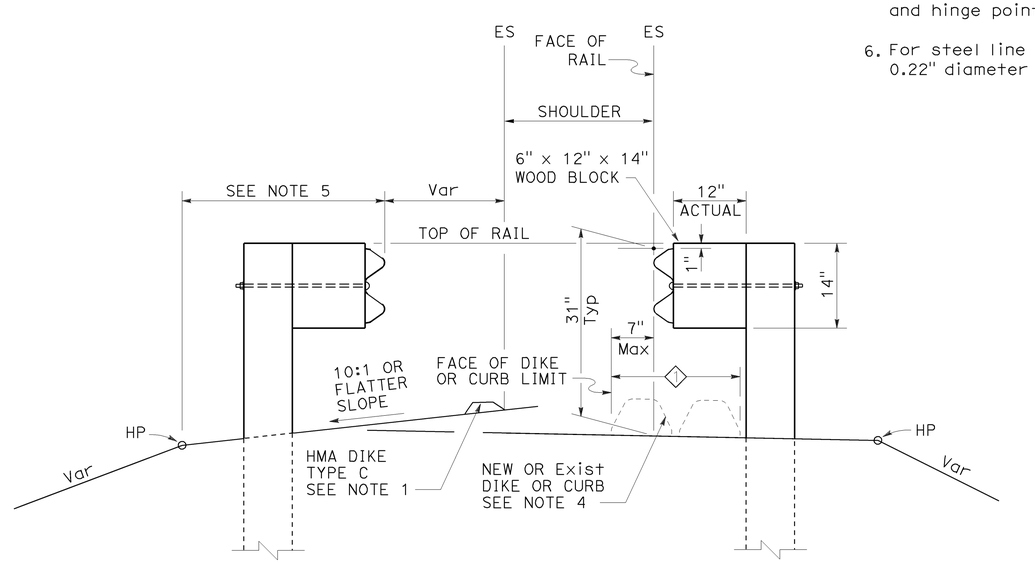

DIKE POSITIONING

See Note 1

1 PERMISSIBLE DIKE OR CURB PLACEMENT AREA

STATE OF CALIFORNIA
DEPARTMENT OF TRANSPORTATION

MIDWEST GUARDRAIL SYSTEM TYPICAL RAILING DELINEATION AND DIKE POSITIONING DETAILS

NO SCALE

RSP A77N4 DATED JULY 19, 2013 SUPPLEMENTS THE STANDARD PLANS BOOK DATED 2010.

REVISED STANDARD PLAN RSP A77N4

2010 REVISED STANDARD PLAN RSP A77N4

7-10-13

Dist	COUNTY	ROUTE	POST MILES TOTAL PROJECT	SHEET No.	TOTAL SHEETS
07	LA	91	R11.3/R20.7	143	192

Randell D. Hiatt
REGISTERED CIVIL ENGINEER

July 19, 2013
PLANS APPROVAL DATE

REGISTERED PROFESSIONAL ENGINEER
Randell D. Hiatt
No. C50200
Exp. 6-30-15
CIVIL
STATE OF CALIFORNIA

THE STATE OF CALIFORNIA OR ITS OFFICERS OR AGENTS SHALL NOT BE RESPONSIBLE FOR THE ACCURACY OR COMPLETENESS OF SCANNED COPIES OF THIS PLAN SHEET.

TO ACCOMPANY PLANS DATED 8-10-15

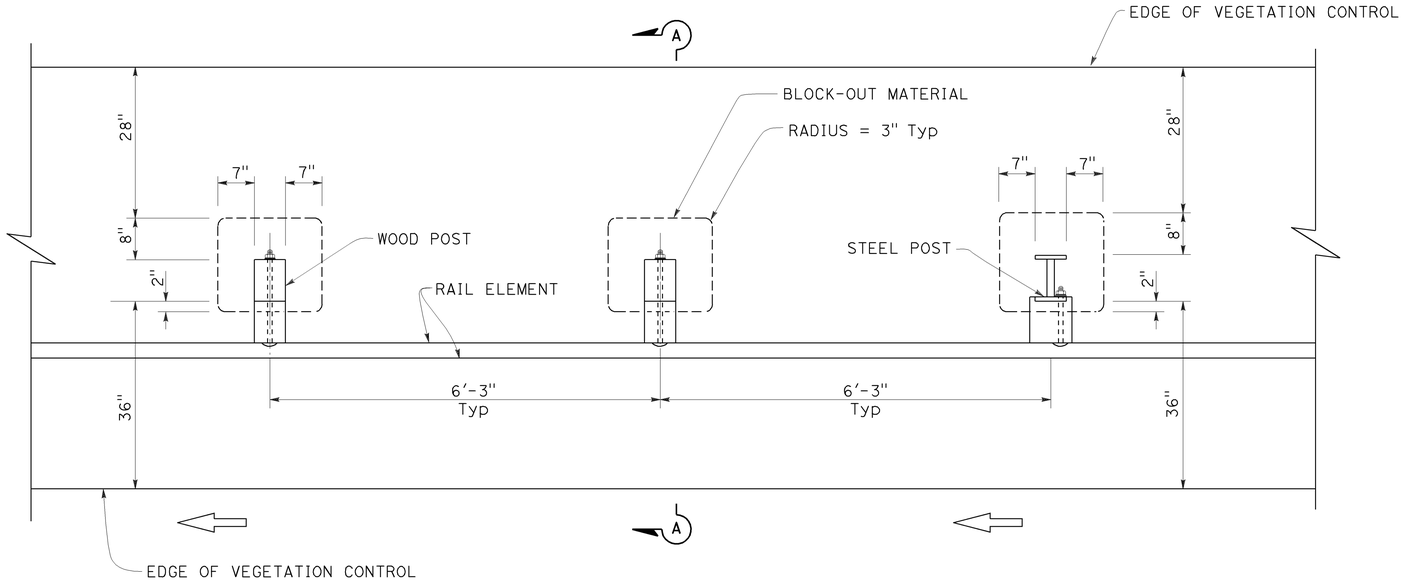

PLAN

NOTES:

1. Where the distance between back of post and hinge point is less than 42", construct vegetation control to 6" from hinge point while maintaining the 8" block-out at back of post. If the 8" block-out at back of post can not be maintained, construct vegetation control flush with the back edge of post.
2. Where dike is constructed under railing, construct vegetation control to back edge of dike. Where paved shoulder is constructed within 36" in front of the post, construct vegetation control to the edge of paved shoulder.
3. For wood post sizes, see Revised Standard Plan RSP A77N1.
4. For steel post sizes, see Revised Standard Plan RSP A77N2.
5. For details not shown, see Revised Standard Plans RSP A77L1 and RSP A77L2.

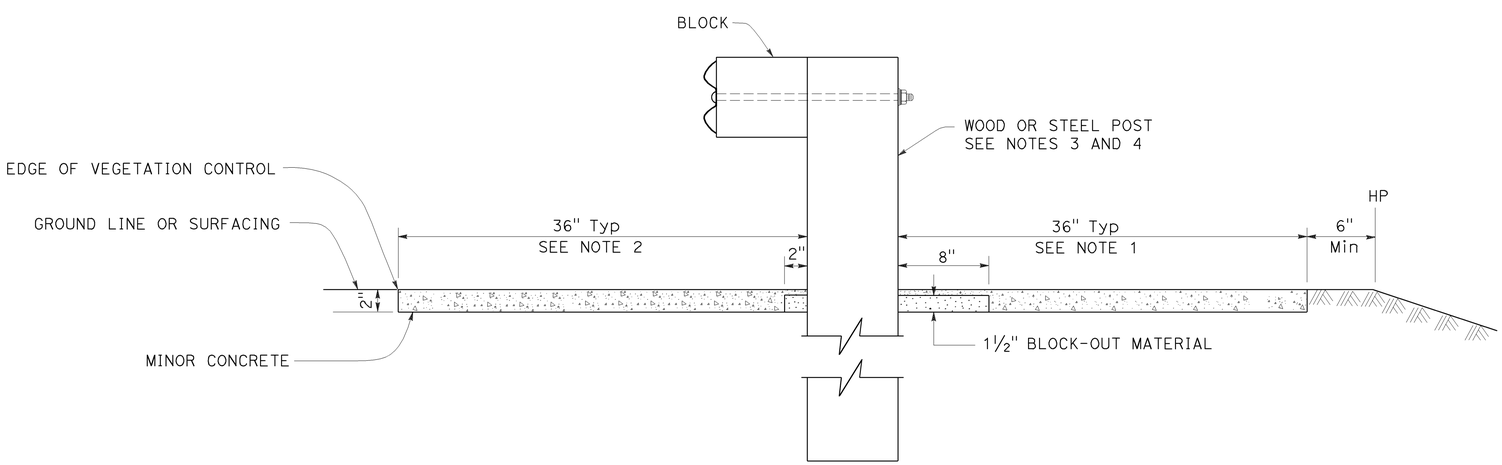

SECTION A-A

STATE OF CALIFORNIA
DEPARTMENT OF TRANSPORTATION

MIDWEST GUARDRAIL SYSTEM TYPICAL VEGETATION CONTROL STANDARD RAILING SECTION

NO SCALE

RSP A77N5 DATED JULY 19, 2013 SUPPLEMENTS THE STANDARD PLANS BOOK DATED 2010.

REVISED STANDARD PLAN RSP A77N5

2010 REVISED STANDARD PLAN RSP A77N5

7-3-13

Dist	COUNTY	ROUTE	POST MILES TOTAL PROJECT	SHEET No.	TOTAL SHEETS
07	LA	91	R11.3/R20.7	144	192

Randell D. Hiatt
REGISTERED CIVIL ENGINEER

July 19, 2013
PLANS APPROVAL DATE

REGISTERED PROFESSIONAL ENGINEER
Randell D. Hiatt
No. C50200
Exp. 6-30-15
CIVIL
STATE OF CALIFORNIA

THE STATE OF CALIFORNIA OR ITS OFFICERS OR AGENTS SHALL NOT BE RESPONSIBLE FOR THE ACCURACY OR COMPLETENESS OF SCANNED COPIES OF THIS PLAN SHEET.

TO ACCOMPANY PLANS DATED 8-10-15

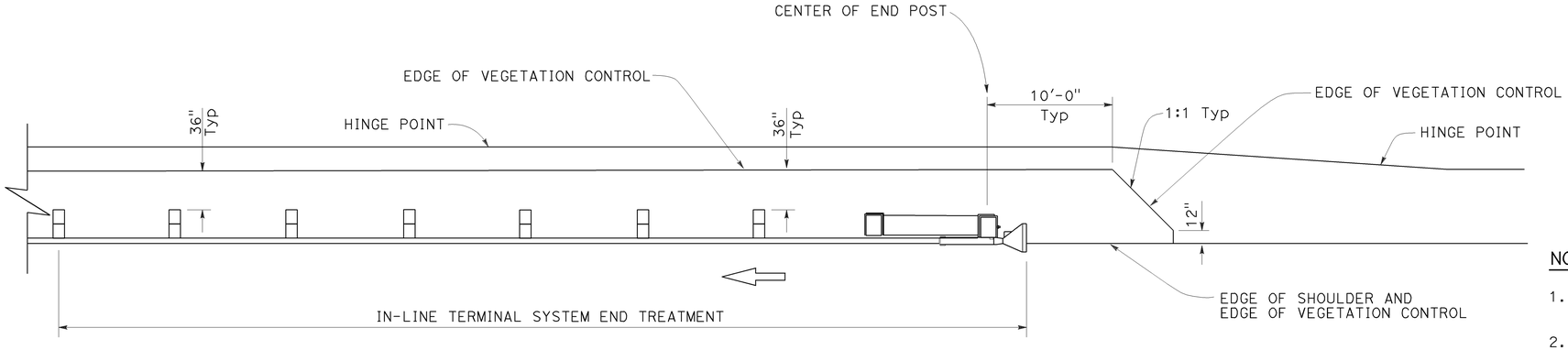

PLAN

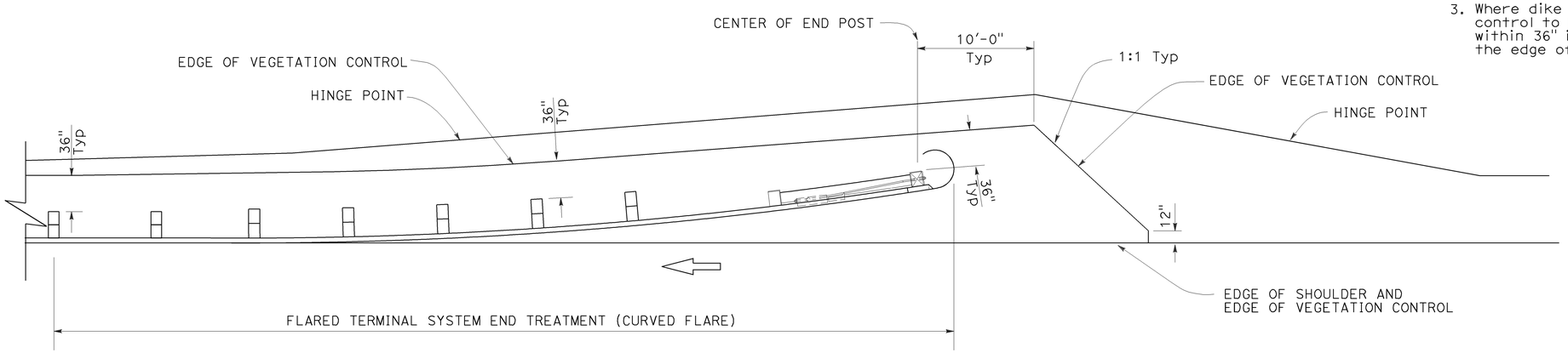

PLAN

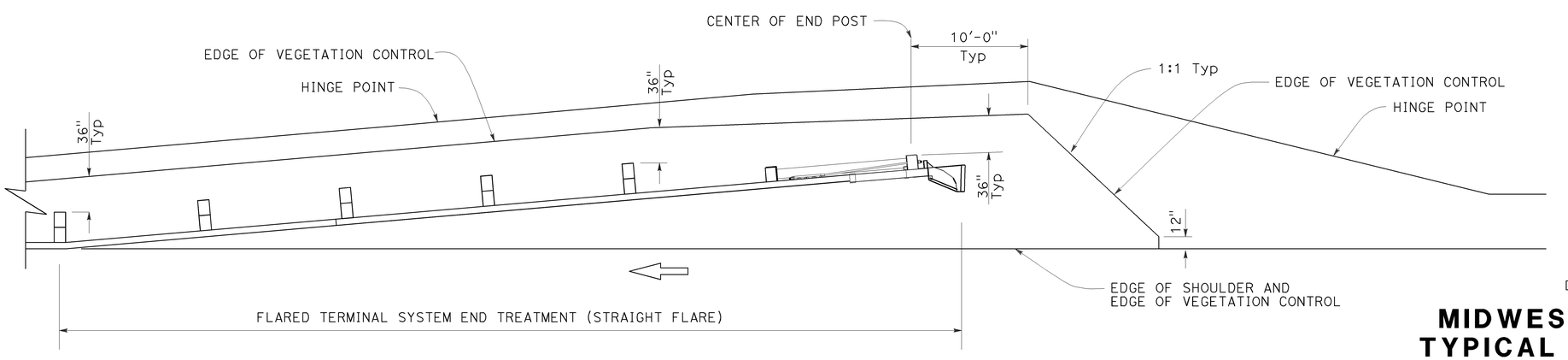

PLAN

NOTES:

1. See Revised Standard Plan RSP A77N5 for additional vegetation control details.
2. Where the distance between back of post and hinge point is less than 42", construct vegetation control to 6" from hinge point while maintaining the 8" block-out at back of post. If the 8" block-out at back of post can not be maintained, construct vegetation control flush with the back edge of post.
3. Where dike is constructed under railing, construct vegetation control to back edge of dike. Where paved shoulder is constructed within 36" in front of the post, construct vegetation control to the edge of paved shoulder.

STATE OF CALIFORNIA
DEPARTMENT OF TRANSPORTATION

MIDWEST GUARDRAIL SYSTEM TYPICAL VEGETATION CONTROL FOR TERMINAL SYSTEM END TREATMENTS

NO SCALE

RSP A77N6 DATED JULY 19, 2013 SUPPLEMENTS THE STANDARD PLANS BOOK DATED 2010.

REVISED STANDARD PLAN RSP A77N6

2010 REVISED STANDARD PLAN RSP A77N6

6-12-13

Dist	COUNTY	ROUTE	POST MILES TOTAL PROJECT	SHEET No.	TOTAL SHEETS
07	LA	91	R11.3/R20.7	145	192

Randell D. Hiatt
REGISTERED CIVIL ENGINEER

July 19, 2013
PLANS APPROVAL DATE

REGISTERED PROFESSIONAL ENGINEER
Randell D. Hiatt
No. C50200
Exp. 6-30-15
CIVIL
STATE OF CALIFORNIA

THE STATE OF CALIFORNIA OR ITS OFFICERS OR AGENTS SHALL NOT BE RESPONSIBLE FOR THE ACCURACY OR COMPLETENESS OF SCANNED COPIES OF THIS PLAN SHEET.

TO ACCOMPANY PLANS DATED 8-10-15

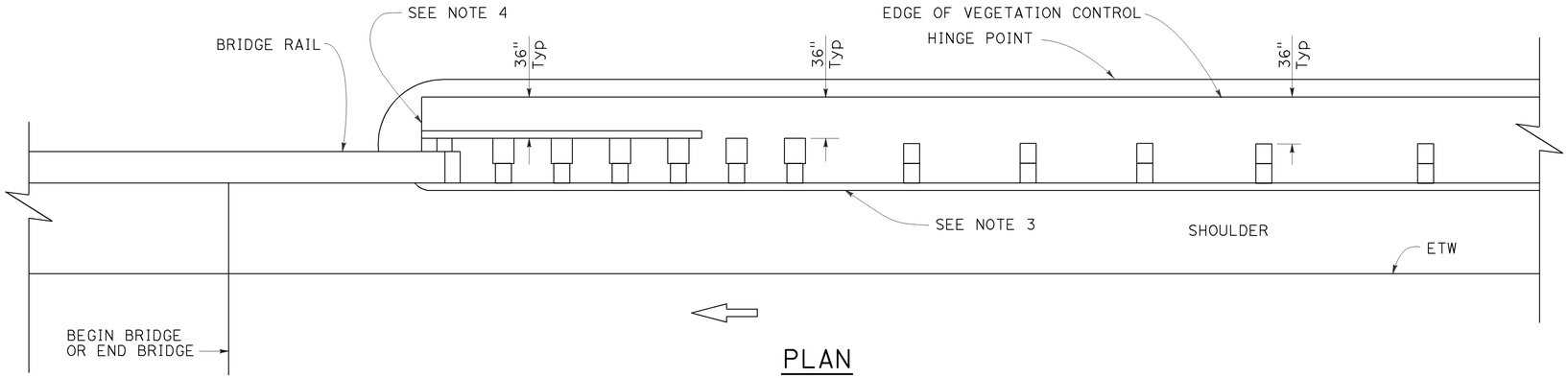

PLAN

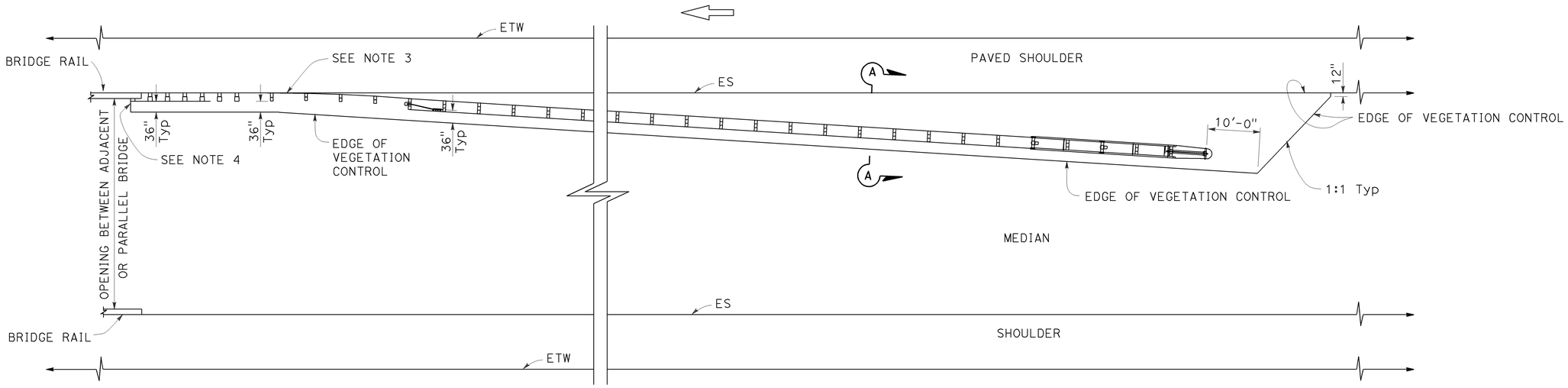

PLAN

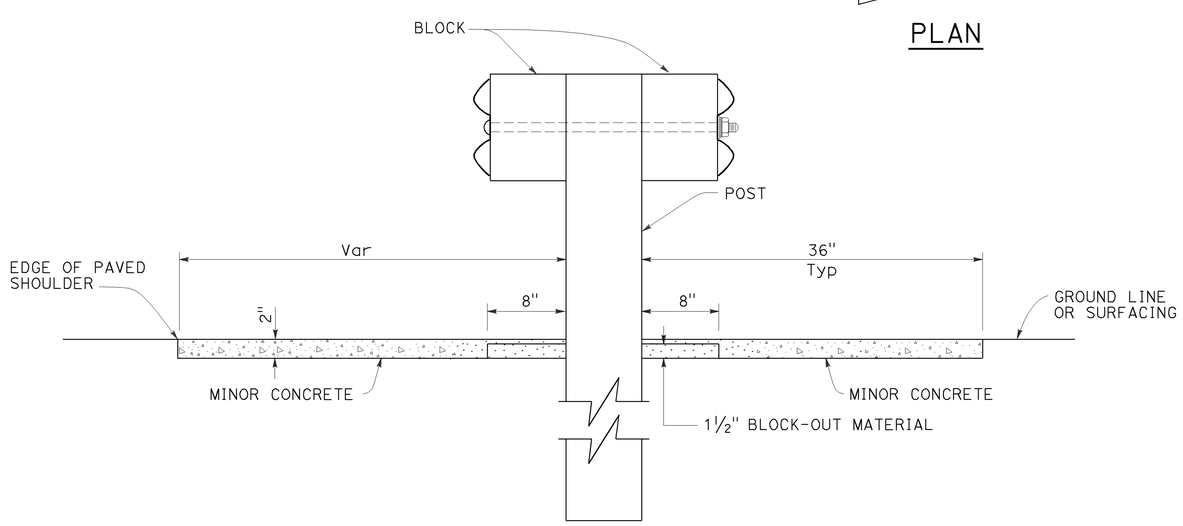

SECTION A-A

NOTES:

1. See Revised Standard Plan RSP A77N5 for additional vegetation control details.
2. Where the distance between back of post and hinge point is less than 42", construct vegetation control to 6" from hinge point while maintaining the 8" block-out at back of post. If the 8" block-out at back of post can not be maintained, construct vegetation control flush with the back edge of post.
3. Where dike is constructed under railing, construct vegetation control to back edge of dike. Where paved shoulder is constructed within 36" in front of the post, construct vegetation control to the edge of paved shoulder.
4. End vegetation control at end of backside rail element.

STATE OF CALIFORNIA
DEPARTMENT OF TRANSPORTATION

MIDWEST GUARDRAIL SYSTEM TYPICAL VEGETATION CONTROL AT STRUCTURE APPROACH

NO SCALE

RSP A77N7 DATED JULY 19, 2013 SUPPLEMENTS THE STANDARD PLANS BOOK DATED 2010.

REVISED STANDARD PLAN RSP A77N7

2010 REVISED STANDARD PLAN RSP A77N7

6-12-13

Dist	COUNTY	ROUTE	POST MILES TOTAL PROJECT	SHEET No.	TOTAL SHEETS
07	LA	91	R11.3/R20.7	146	192

Randell D. Hiatt
REGISTERED CIVIL ENGINEER

July 19, 2013
PLANS APPROVAL DATE

REGISTERED PROFESSIONAL ENGINEER
Randell D. Hiatt
No. C50200
Exp. 6-30-15
CIVIL
STATE OF CALIFORNIA

THE STATE OF CALIFORNIA OR ITS OFFICERS OR AGENTS SHALL NOT BE RESPONSIBLE FOR THE ACCURACY OR COMPLETENESS OF SCANNED COPIES OF THIS PLAN SHEET.

TO ACCOMPANY PLANS DATED 8-10-15

NOTES:

1. See Revised Standard Plan RSP A77N5 for additional vegetation control details.
2. Where the distance between back of post and hinge point is less than 42", construct vegetation control to 6" from hinge point while maintaining the 8" block-out at back of post. If the 8" block-out at back of post can not be maintained, construct vegetation control flush with the back edge of post.
3. Where dike is constructed under railing, construct vegetation control to back edge of dike. Where paved shoulder is constructed within 36" in front of the post, construct vegetation control to the edge of paved shoulder.

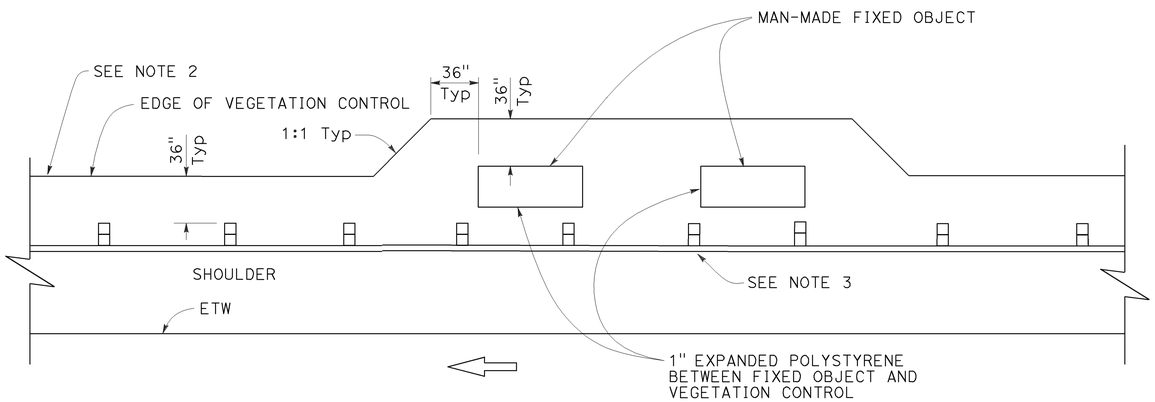

PLAN

Fixed object(s) on shoulder

STATE OF CALIFORNIA
DEPARTMENT OF TRANSPORTATION

MIDWEST GUARDRAIL SYSTEM TYPICAL VEGETATION CONTROL AT FIXED OBJECT

NO SCALE

RSP A77N8 DATED JULY 19, 2013 SUPPLEMENTS THE STANDARD PLANS BOOK DATED 2010.

REVISED STANDARD PLAN RSP A77N8

2010 REVISED STANDARD PLAN RSP A77N8

6-12-13

Dist	COUNTY	ROUTE	POST MILES TOTAL PROJECT	SHEET No.	TOTAL SHEETS
07	LA	91	R11.3/R20.7	147	192

Randell D. Hiatt
REGISTERED CIVIL ENGINEER

July 19, 2013
PLANS APPROVAL DATE

REGISTERED PROFESSIONAL ENGINEER
Randell D. Hiatt
No. C50200
Exp. 6-30-15
CIVIL
STATE OF CALIFORNIA

THE STATE OF CALIFORNIA OR ITS OFFICERS OR AGENTS SHALL NOT BE RESPONSIBLE FOR THE ACCURACY OR COMPLETENESS OF SCANNED COPIES OF THIS PLAN SHEET.

TO ACCOMPANY PLANS DATED 8-10-15

2010 REVISED STANDARD PLAN RSP A77N9

NOTES:

1. See Revised Standard Plan RSP A77N5 for additional vegetation control details.
2. Where dike is constructed under railing, construct vegetation control to back edge of dike. Where paved shoulder is constructed within 36" in front of the post, construct vegetation control to the edge of paved shoulder.

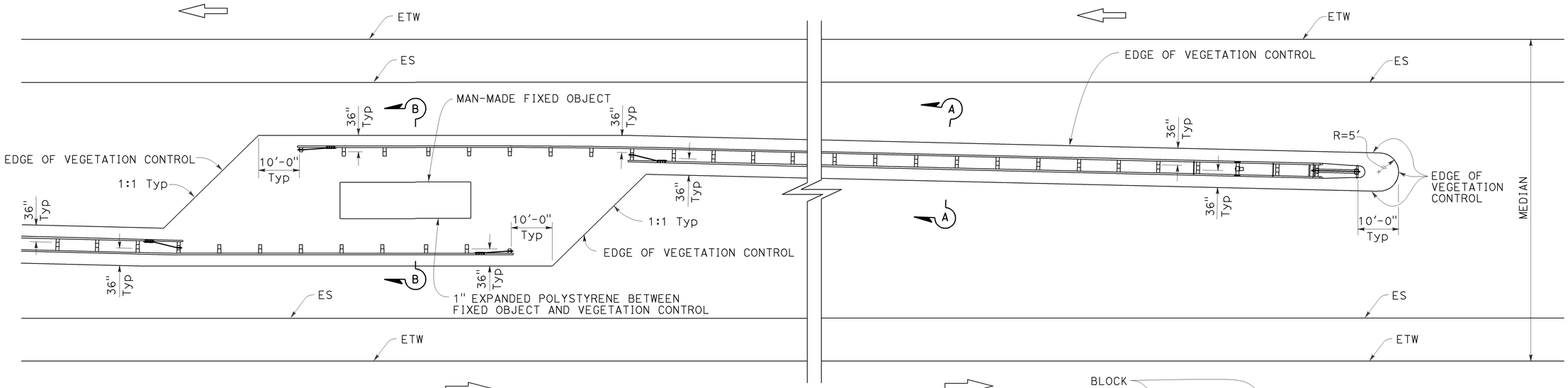

PLAN

Fixed object(s) in median

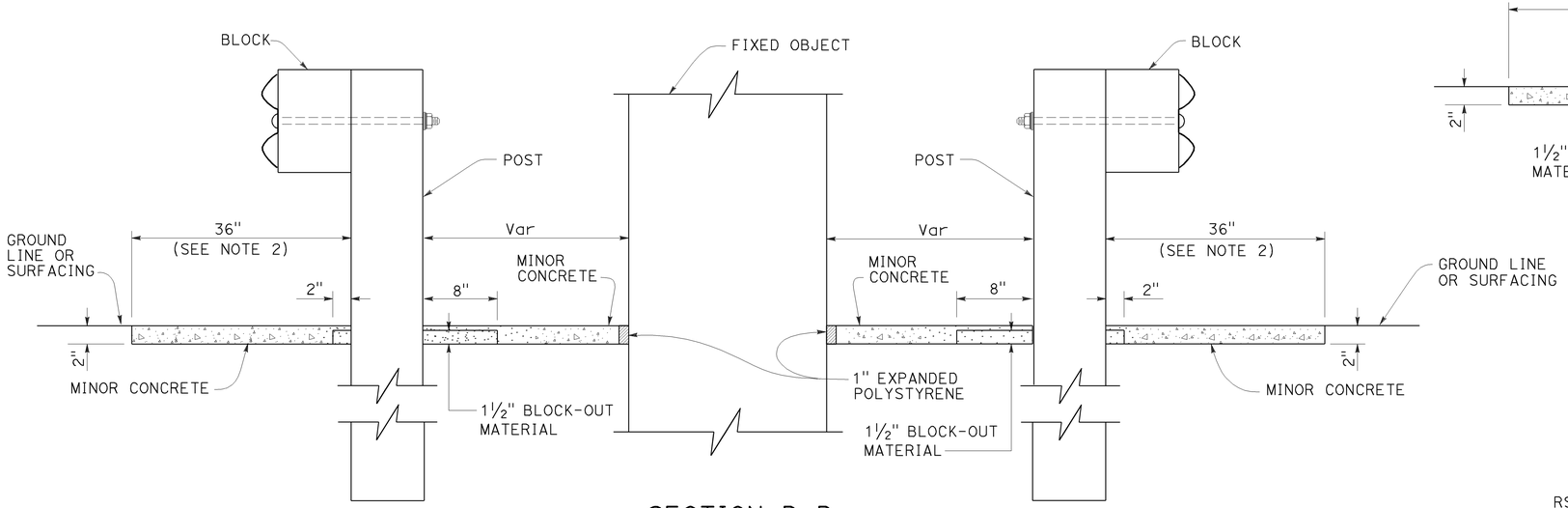

SECTION B-B

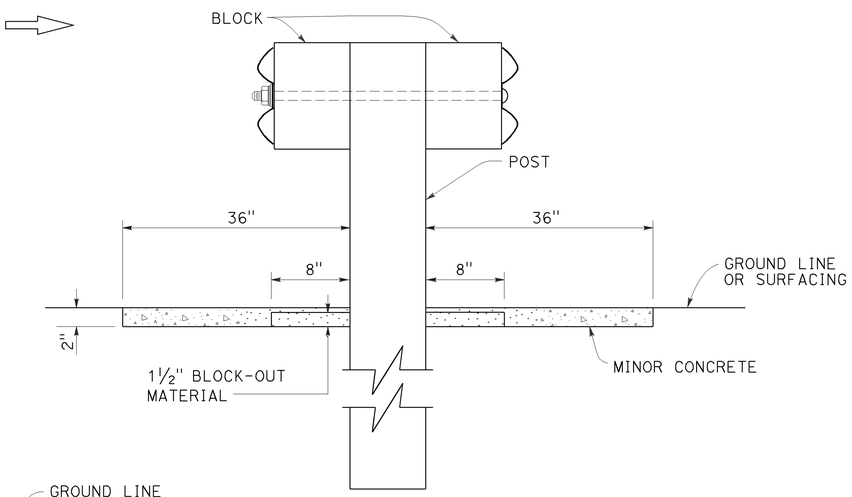

SECTION A-A

STATE OF CALIFORNIA
DEPARTMENT OF TRANSPORTATION

MIDWEST GUARDRAIL SYSTEM TYPICAL VEGETATION CONTROL AT FIXED OBJECT

NO SCALE

RSP A77N9 DATED JULY 19, 2013 SUPPLEMENTS THE STANDARD PLANS BOOK DATED 2010.

REVISED STANDARD PLAN RSP A77N9

6-12-13

Dist	COUNTY	ROUTE	POST MILES TOTAL PROJECT	SHEET No.	TOTAL SHEETS
07	LA	91	R11.3/R20.7	148	192

Randell D. Hiatt
REGISTERED CIVIL ENGINEER

July 19, 2013
PLANS APPROVAL DATE

REGISTERED PROFESSIONAL ENGINEER
Randell D. Hiatt
No. C50200
Exp. 6-30-15
CIVIL
STATE OF CALIFORNIA

THE STATE OF CALIFORNIA OR ITS OFFICERS OR AGENTS SHALL NOT BE RESPONSIBLE FOR THE ACCURACY OR COMPLETENESS OF SCANNED COPIES OF THIS PLAN SHEET.

TO ACCOMPANY PLANS DATED 8-10-15

2010 REVISED STANDARD PLAN RSP A77N10

NOTES:

1. See Revised Standard Plan RSP A77N5 for additional vegetation control details.
2. Where dike is constructed under railing, construct vegetation control to back edge of dike. Where paved shoulder is constructed within 36" in front of the post, construct vegetation control to the edge of paved shoulder.

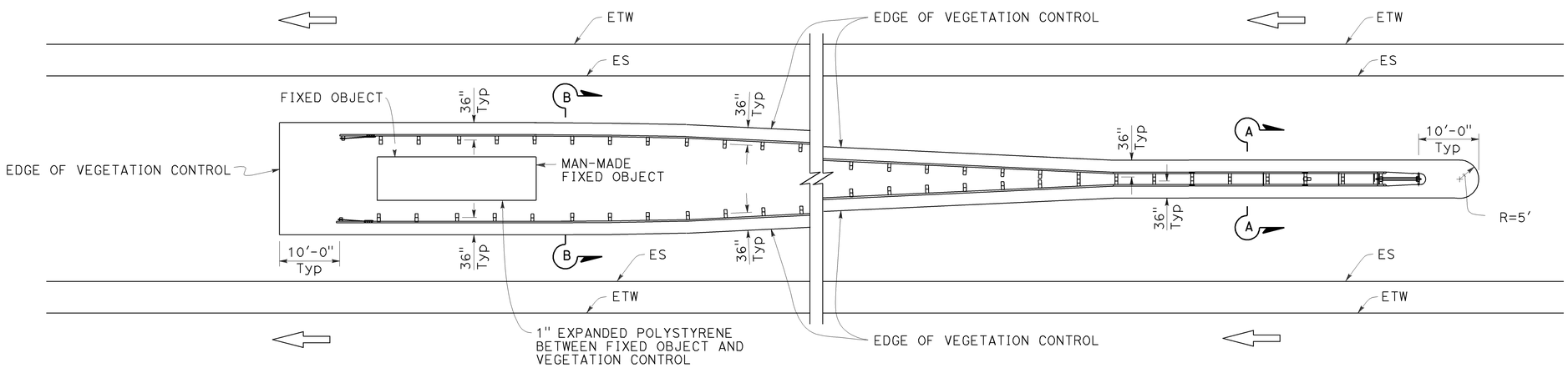

PLAN

Fixed object(s) between separate roadbeds
(One-Way Traffic)

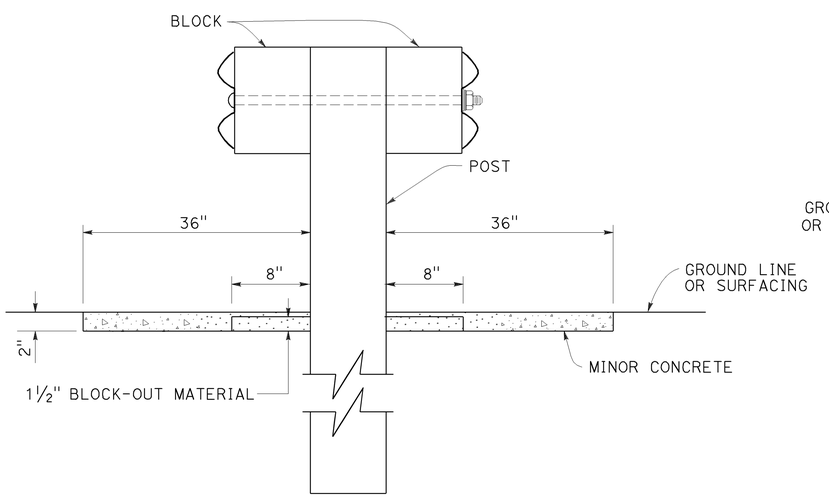

SECTION A-A

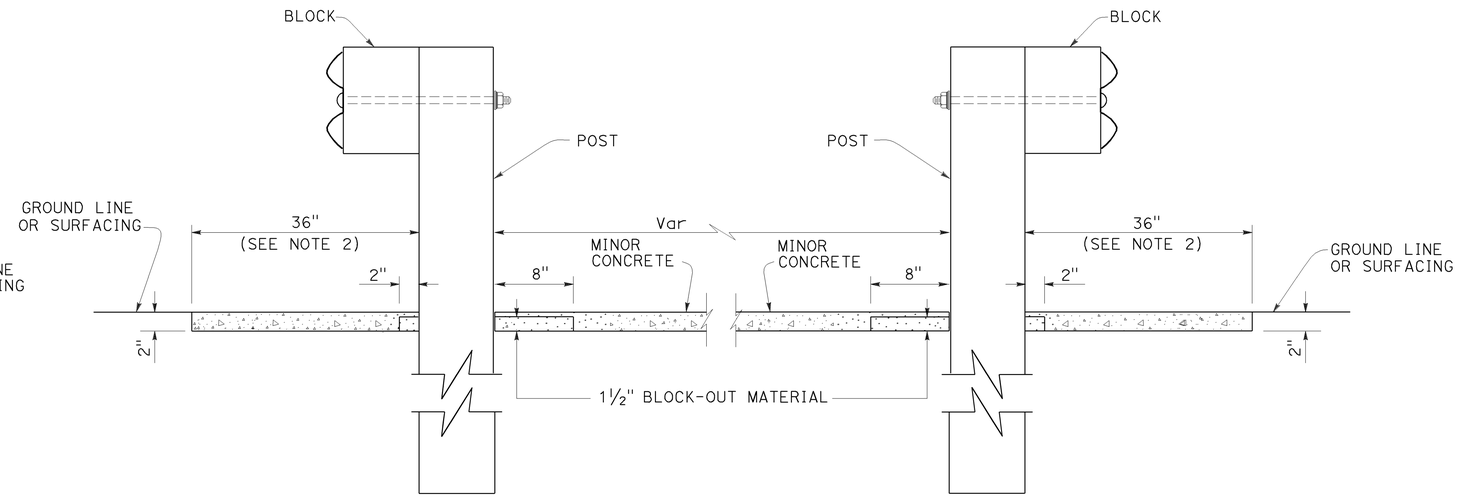

SECTION B-B

STATE OF CALIFORNIA
DEPARTMENT OF TRANSPORTATION

MIDWEST GUARDRAIL SYSTEM TYPICAL VEGETATION CONTROL AT FIXED OBJECT

NO SCALE

RSP A77N10 DATED JULY 19, 2013 SUPPLEMENTS THE STANDARD PLANS BOOK DATED 2010.

REVISED STANDARD PLAN RSP A77N10

6-12-13

Dist	COUNTY	ROUTE	POST MILES TOTAL PROJECT	SHEET No.	TOTAL SHEETS
07	LA	91	R11.3/R20.7	149	192

Randell D. Hiatt
REGISTERED CIVIL ENGINEER

July 19, 2013
PLANS APPROVAL DATE

REGISTERED PROFESSIONAL ENGINEER Randell D. Hiatt No. C50200 Exp. 6-30-15 CIVIL STATE OF CALIFORNIA

THE STATE OF CALIFORNIA OR ITS OFFICERS OR AGENTS SHALL NOT BE RESPONSIBLE FOR THE ACCURACY OR COMPLETENESS OF SCANNED COPIES OF THIS PLAN SHEET.

TO ACCOMPANY PLANS DATED 8-10-15

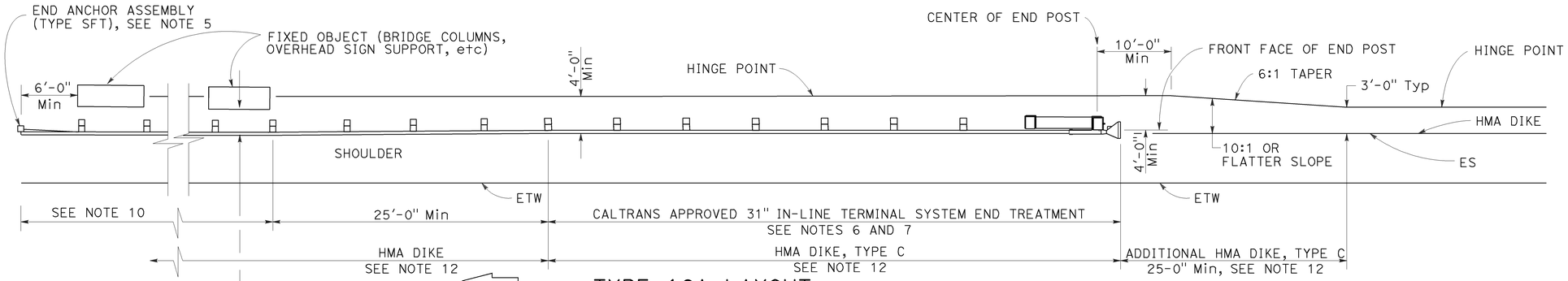

TYPE 16A LAYOUT

(MGS installation at roadside fixed object or objects with 31" in-line end treatment at traffic approach end of railing)
See Notes 11 and 12

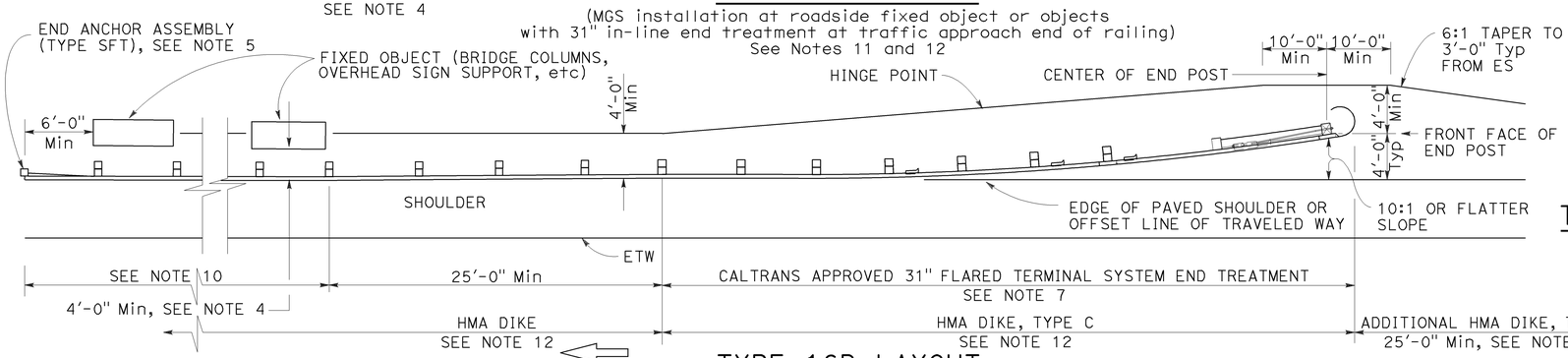

TYPE 16B LAYOUT

(MGS installation at roadside fixed object or objects with 31' flared end treatment at traffic approach end of railing)
See Notes 11 and 12

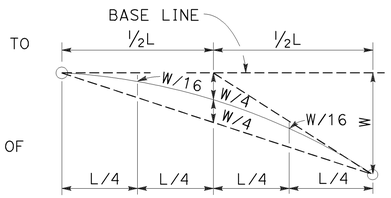

TYPIC AL PARABOLIC LAYOUT

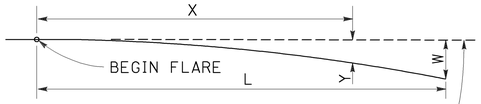

BASE LINE (EDGE OF PAVED SHOULDER OR OFFSET LINE OF EDGE OF TRAVELED WAY)

$$Y = \frac{WX^2}{L^2}$$

Y = OFFSET FROM BASE LINE
W = MAXIMUM OFFSET
X = DISTANCE ALONG BASE LINE
L = LENGTH OF FLARE

PARABOLIC FLARE OFFSETS

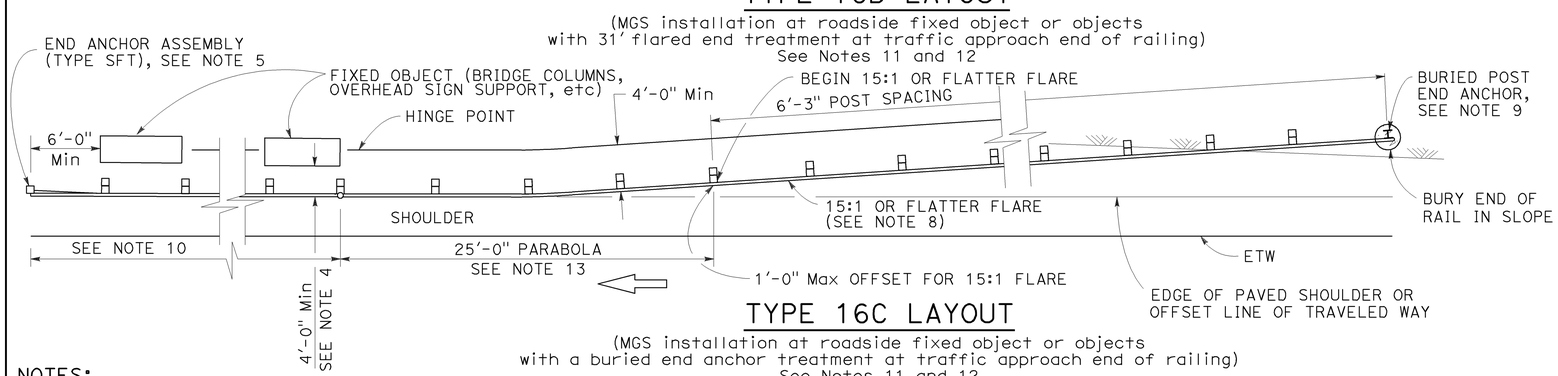

TYPE 16C LAYOUT

(MGS installation at roadside fixed object or objects with a buried end anchor treatment at traffic approach end of railing)
See Notes 11 and 12

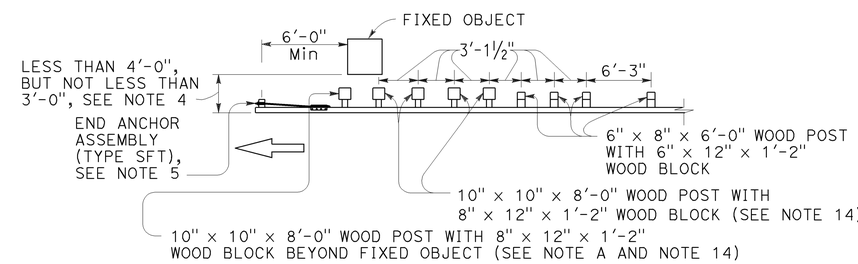

NOTE A: For a series of fixed objects (bridge columns, overhead sign supports, etc.) additional 10" x 10" x 8'-0" wood post with 8" x 12" x 1'-2" wood blocks at 3'-1½" center to center spacing are to be used between fixed objects.

STRENGTHENED MIDWEST GUARDRAIL SYSTEM SECTIONS FOR FIXED OBJECT

Use strengthened MGS sections with Types 16A, 16B or 16C layouts where minimum clearance between the face of the railing and fixed object(s) is less than 4'-0", but not less than 3'-0". See Note 4

NOTES:

1. Line post, blocks and hardware to be used are shown on Revised Standard Plans RSP A77L1, RSP A77L2, RSP A77M1, RSP A77N1 and RSP A77N2.
2. MGS post spacing to be 6'-3" center to center, except as otherwise noted.
3. Except as noted, line posts are 6" x 8" x 6'-0" wood with 6" x 12" x 1'-2" wood blocks. W6 x 8.5 or W6 x 9 steel posts, 6'-0" in length, with 6" x 12" x 1'-2" notched wood blocks or notched recycled plastic blocks may be used for 6" x 8" x 6'-0" wood line posts with 6" x 12" x 1'-2" wood blocks where applicable and when specified.
4. A 4'-0" minimum clearance is required between the face of the railing and the face of a fixed object located directly behind MGS sections with post spacing of 6'-3". Construct MGS as shown in the detail "Strengthened Midwest Guardrail System Sections for Fixed Object" on this plan, where the clearance between the face of the railing and the face of a fixed object is less than 4'-0", but not less than 3'-0". Where the clearance is less than 3'-0", a concrete wall or barrier should be constructed to shield the fixed object(s).
5. For End Anchor Assembly (Type SFT) details, see Revised Standard Plan RSP A77S1.
6. 31" in-line terminal system end treatments are used where site conditions will not accommodate a 31" flared end treatment.
7. The type of 31" terminal system to be used will be shown on the Project Plans.
8. The 15:1 or flatter flare used with Type 16C Layout is based on the edge of the paved shoulder or offset line of edge of the traveled way. The length of MGS within the 15:1 or flatter flare is based on site conditions and should be a length equal to multiples of 12'-6".
9. For details of the Buried Post End Anchor used with Type 16C Layout, see Revised Standard Plan RSP A77T2.
10. As site conditions dictate, construct additional MGS to shield fixed object(s). Additional MGS length equal to multiples of 12'-6". Post spacing at 6'-3" except as specified in Note 4.
11. Layout Types 16A, 16B or 16C are typically used where MGS is recommended to shield roadside fixed object(s) and a crashworthy 31" end treatment is required for only one direction of traffic.
12. Where placement of dike is required with MGS, see Revised Standard Plan RSP A77N4 for dike positioning details.
13. For typical flare offsets for 25'-0" length parabola with maximum offset of 1'-0", see Revised Standard Plan RSP A77P1.
14. W6 x 15 steel post, 8'-0" in length, with 8" x 12" x 1'-2" notched wood block or notched recycled plastic blocks may be used in place of the 10" x 10" x 8'-0" wood post with 8" x 12" x 1'-2" wood block shown in the detail "Strengthened Midwest Guardrail System Sections for Fixed Object".

STATE OF CALIFORNIA
DEPARTMENT OF TRANSPORTATION

MIDWEST GUARDRAIL SYSTEM TYPICAL LAYOUTS FOR ROADSIDE FIXED OBJECTS

NO SCALE

RSP A77R3 DATED JULY 19, 2013 SUPPLEMENTS THE STANDARD PLANS BOOK DATED 2010.

REVISED STANDARD PLAN RSP A77R3

2010 REVISED STANDARD PLAN RSP A77R3

6-20-13

Dist	COUNTY	ROUTE	POST MILES TOTAL PROJECT	SHEET No.	TOTAL SHEETS
07	LA	91	R11.3/R20.7	150	192

Randell D. Hiatt
REGISTERED CIVIL ENGINEER

July 19, 2013
PLANS APPROVAL DATE

REGISTERED PROFESSIONAL ENGINEER
Randell D. Hiatt
No. C50200
Exp. 6-30-15
CIVIL
STATE OF CALIFORNIA

THE STATE OF CALIFORNIA OR ITS OFFICERS OR AGENTS SHALL NOT BE RESPONSIBLE FOR THE ACCURACY OR COMPLETENESS OF SCANNED COPIES OF THIS PLAN SHEET.

TO ACCOMPANY PLANS DATED 8-10-15

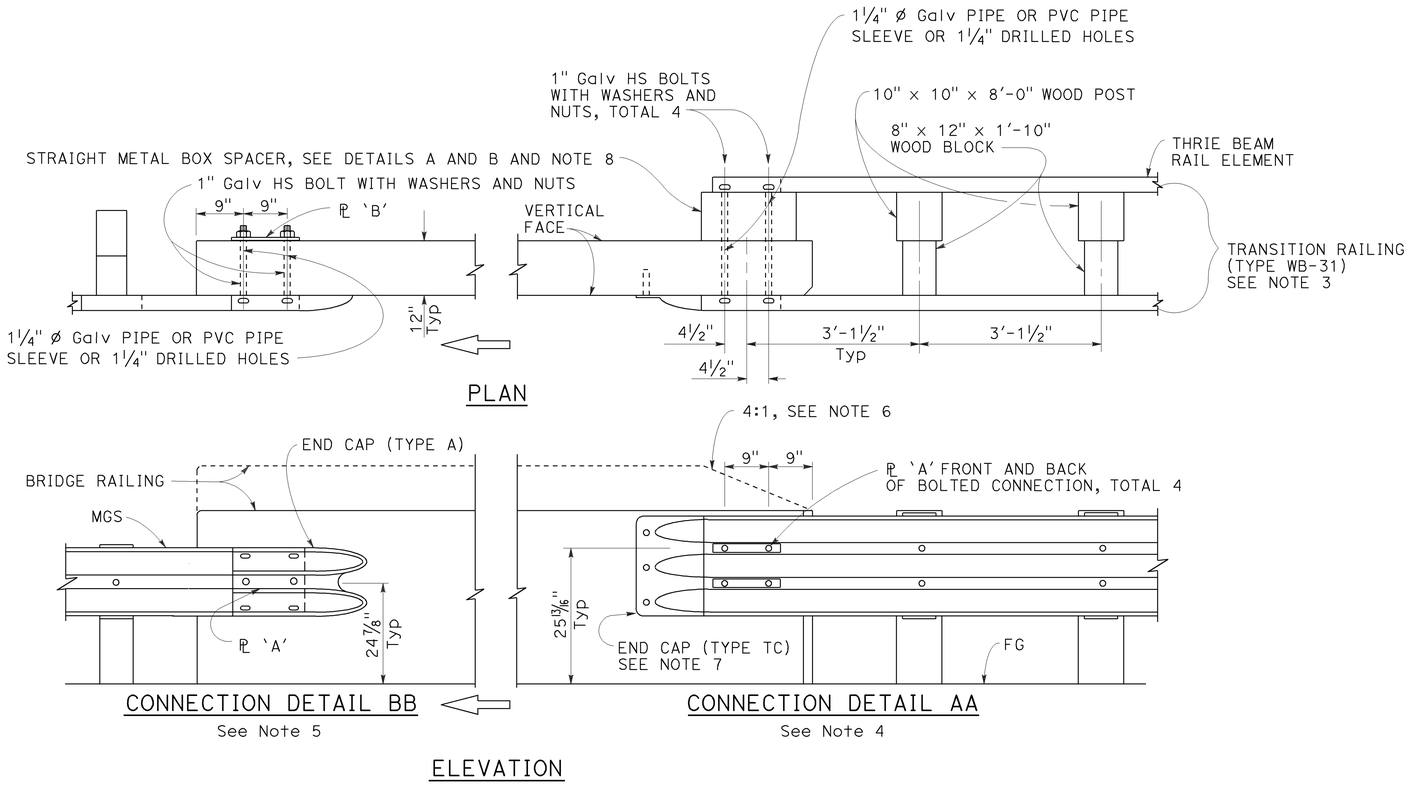

MIDWEST GUARDRAIL SYSTEM CONNECTION TO BRIDGE RAILING WITHOUT SIDEWALK

NOTES:

1. See Revised Standard Plan RSP A77U2 for additional connection details to bridges without sidewalks.
2. Additional details of posts, blocks and hardware are shown on Revised Standard Plans RSP A77M1, RSP A77N1 and RSP A77N2.
3. For additional details of Transition Railing (Type WB-31), see Revised Standard Plan RSP A77U4. Transition Railing (Type WB-31) transitions the 12 gauge MGS railing section to a heavier gage nested thrie beam railing section which is connected to the concrete bridge railing.
4. For typical use of Connection Detail AA, see Layout Types 12A and 12B on Revised Standard Plan RSP A77Q1, Layout Types 12C and 12D on Revised Standard Plan RSP A77Q2, and Layout Type 12E on Revised Standard Plan RSP A77Q3.
5. For typical use of Connection Detail BB, see Layout Type 12D (structure departure railing connection) on Revised Standard Plan RSP A77Q2 and Layout Type 12DD on Revised Standard Plan RSP A77Q5.
6. Where the height of the bridge railing exceeds the height of the thrie beam railing by more than 1" at Connection Detail AA, taper the top of the end of the bridge railing at 4:1 to match the top elevation of the thrie beam rail.
7. For details of End Cap (Type TC), see Revised Standard Plan RSP A77U4.
8. See Revised Standard Plan RSP A77U4 for additional details regarding depth dimension for straight metal box spacer.

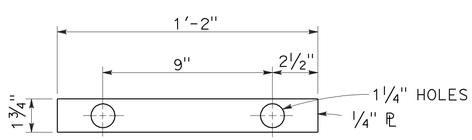

PLATE 'A'

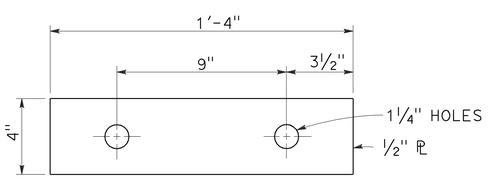

PLATE 'B'
(For backside of connection BB)

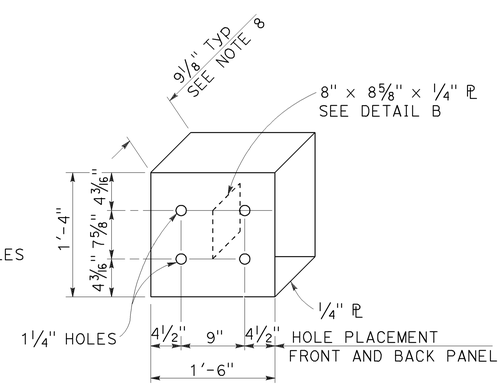

DETAIL A

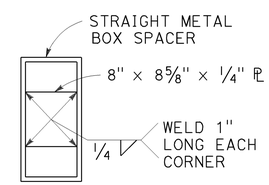

DETAIL B

STRAIGHT METAL BOX SPACER

STATE OF CALIFORNIA
DEPARTMENT OF TRANSPORTATION

MIDWEST GUARDRAIL SYSTEM CONNECTIONS TO BRIDGE RAILINGS WITHOUT SIDEWALKS DETAILS No. 1

NO SCALE

RSP A77U1 DATED JULY 19, 2013 SUPPLEMENTS THE STANDARD PLANS BOOK DATED 2010.

REVISED STANDARD PLAN RSP A77U1

2010 REVISED STANDARD PLAN RSP A77U1

7-8-13

Dist	COUNTY	ROUTE	POST MILES TOTAL PROJECT	SHEET No.	TOTAL SHEETS
07	LA	91	R11.3/R20.7	151	192

Randell D. Hiatt
REGISTERED CIVIL ENGINEER

July 19, 2013
PLANS APPROVAL DATE

REGISTERED PROFESSIONAL ENGINEER
Randell D. Hiatt
No. C50200
Exp. 6-30-15
CIVIL
STATE OF CALIFORNIA

THE STATE OF CALIFORNIA OR ITS OFFICERS OR AGENTS SHALL NOT BE RESPONSIBLE FOR THE ACCURACY OR COMPLETENESS OF SCANNED COPIES OF THIS PLAN SHEET.

TO ACCOMPANY PLANS DATED 8-10-15

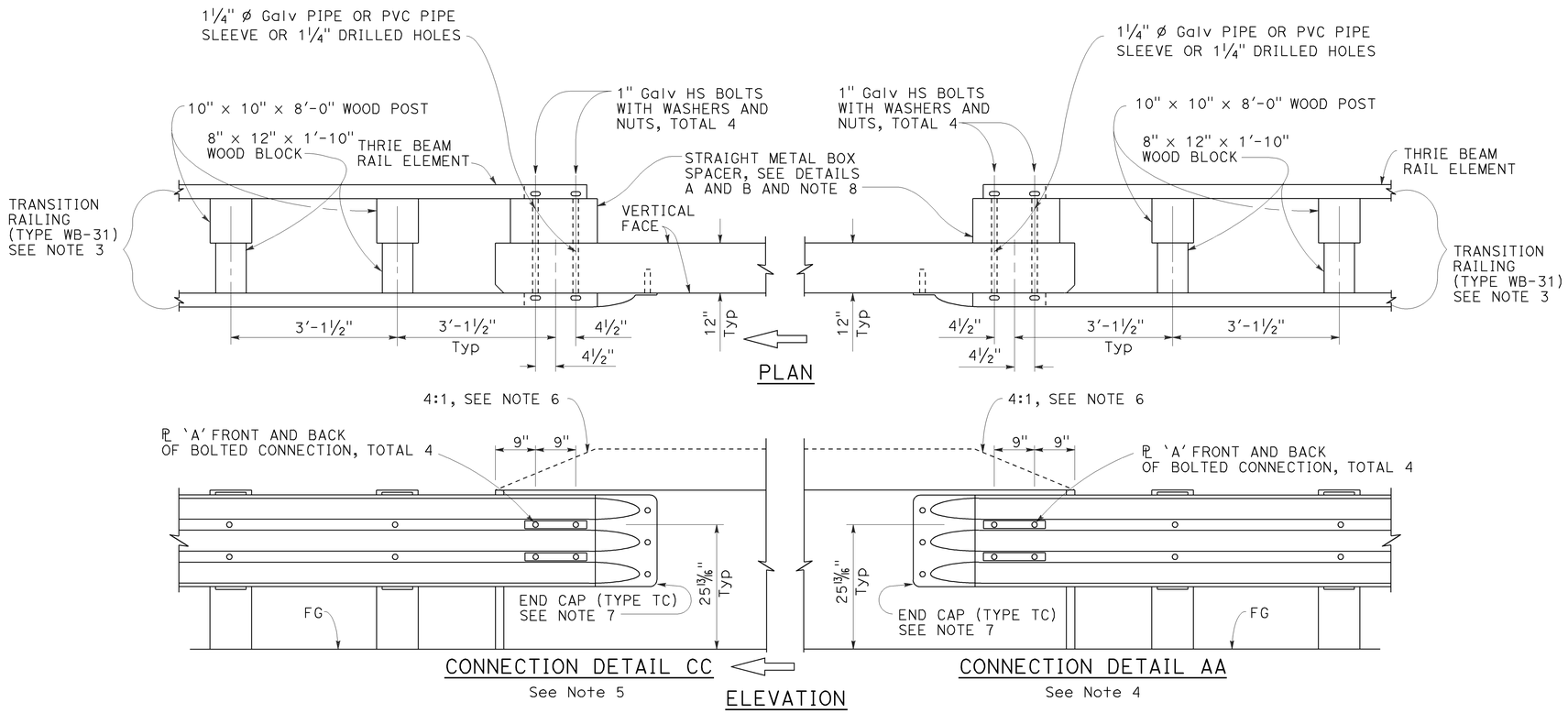

MIDWEST GUARDRAIL SYSTEM CONNECTION TO BRIDGE RAILING WITHOUT SIDEWALK

NOTES:

1. See Revised Standard Plan RSP A77U1 for additional connection details to bridges without sidewalks.
2. Additional details of posts, blocks and hardware are shown on Revised Standard Plans RSP A77M1, RSP A77N1 and RSP A77N2.
3. For additional details of Transition Railing (Type WB-31), see Revised Standard Plan RSP A77U4. Transition Railing (Type WB-31) transitions the 12 gauge MGS railing section to a heavier gage nested thrie beam railing section which is connected to the concrete bridge railing.
4. For typical use of Connection Detail AA, see Layout Types 12A and 12B on Revised Standard Plan RSP A77Q1, Layout Types 12C and 12D on Revised Standard Plan RSP A77Q2, and Layout Type 12E on Revised Standard Plan RSP A77Q3.
5. For typical use of Connection Detail CC, see Layout Types 12AA and 12BB on Revised Standard Plan RSP A77Q4 and Layout Type 12CC on Revised Standard Plan RSP A77Q5.
6. Where the height of the bridge railing exceeds the height of the thrie beam railing by more than 1" at Connection Detail AA and connection Detail CC, taper the top of the end of the bridge railing at 4:1 to match the top elevation of the thrie beam railing.
7. For details of End Cap (Type TC), see Revised Standard Plan RSP A77U4.
8. See Revised Standard Plan RSP A77U4 for additional details regarding depth dimension for straight metal box spacer.

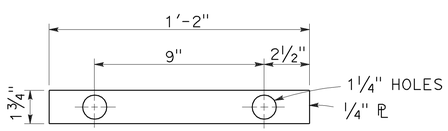

PLATE 'A'

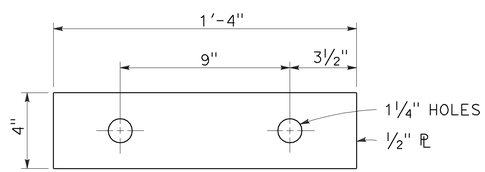

PLATE 'B'
(For backside of connection BB)

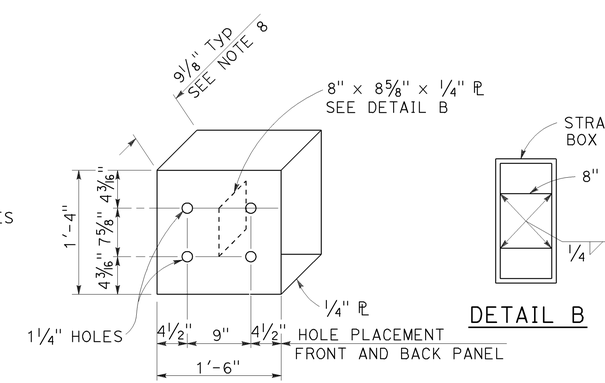

DETAIL A

STRAIGHT METAL BOX SPACER

STATE OF CALIFORNIA
DEPARTMENT OF TRANSPORTATION

MIDWEST GUARDRAIL SYSTEM CONNECTIONS TO BRIDGE RAILINGS WITHOUT SIDEWALKS DETAILS No. 2

NO SCALE

RSP A77U2 DATED JULY 19, 2013 SUPPLEMENTS THE STANDARD PLANS BOOK DATED 2010.

REVISED STANDARD PLAN RSP A77U2

2010 REVISED STANDARD PLAN RSP A77U2

6-20-13

Dist	COUNTY	ROUTE	POST MILES TOTAL PROJECT	SHEET No.	TOTAL SHEETS
07	LA	91	R11.3/R20.7	152	192

Randell D. Hiatt
REGISTERED CIVIL ENGINEER

January 23, 2015
PLANS APPROVAL DATE

REGISTERED PROFESSIONAL ENGINEER Randell D. Hiatt No. C50200 Exp. 6-30-15 CIVIL STATE OF CALIFORNIA

THE STATE OF CALIFORNIA OR ITS OFFICERS OR AGENTS SHALL NOT BE RESPONSIBLE FOR THE ACCURACY OR COMPLETENESS OF SCANNED COPIES OF THIS PLAN SHEET.

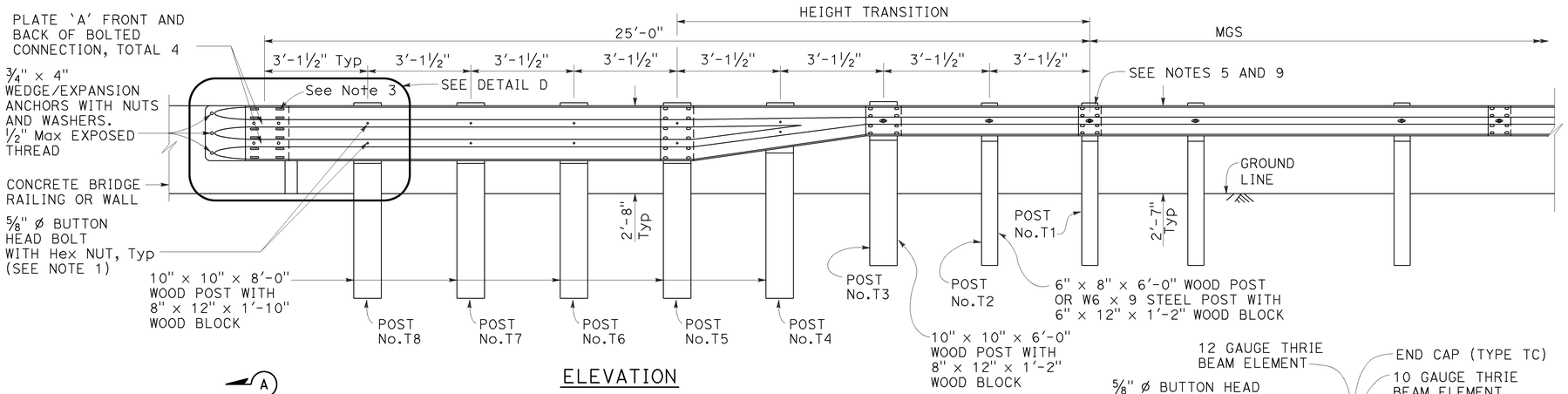

ELEVATION

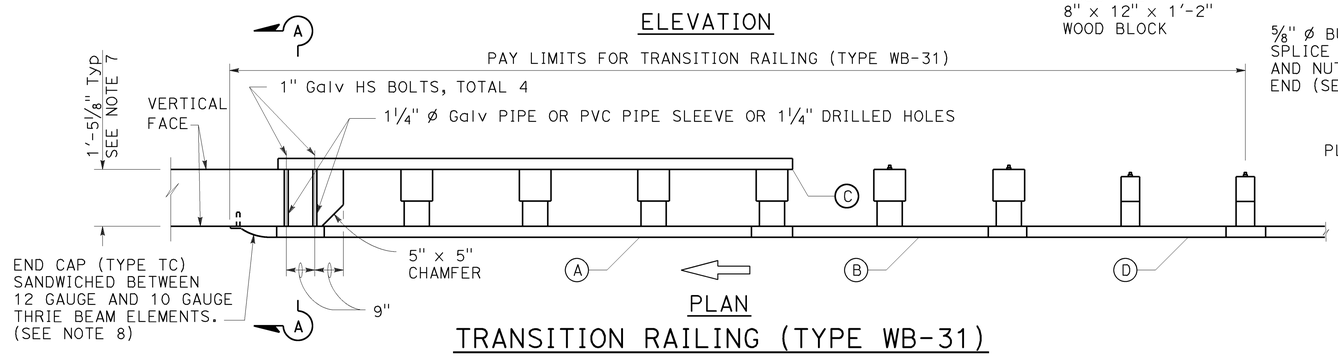

PLAN

TRANSITION RAILING (TYPE WB-31)

(No Blockout Attachment)

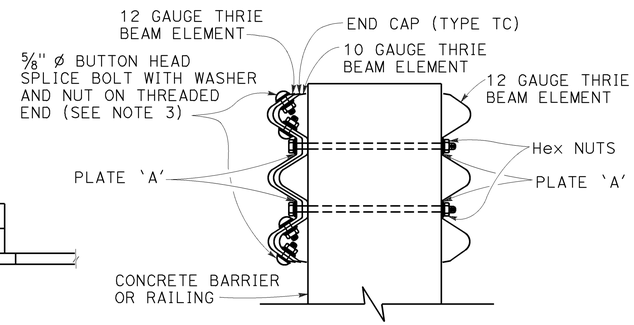

SECTION A-A

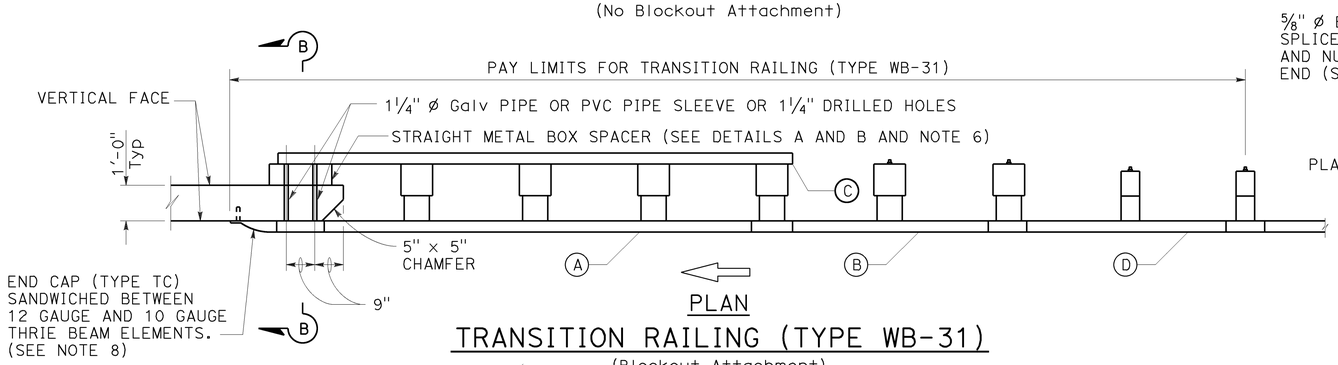

PLAN

TRANSITION RAILING (TYPE WB-31)

(Blockout Attachment)

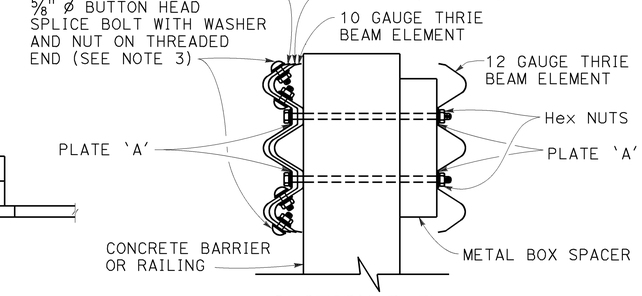

SECTION B-B

LEGEND:

- (A) NESTED THRIE BEAM ELEMENTS (ONE 12 GAUGE ELEMENT NESTED OVER ONE 10 GAUGE ELEMENT).
- (B) ONE ASYMMETRICAL 10 GAUGE "W" BEAM TO THRIE BEAM ELEMENT.
- (C) ONE 12 GAUGE THRIE BEAM ELEMENT.
- (D) ONE 10 GAUGE "W" BEAM RAIL ELEMENT (7'-3 1/2"LENGTH)

10 GAUGE = 0.138" THICK
12 GAUGE = 0.108" THICK

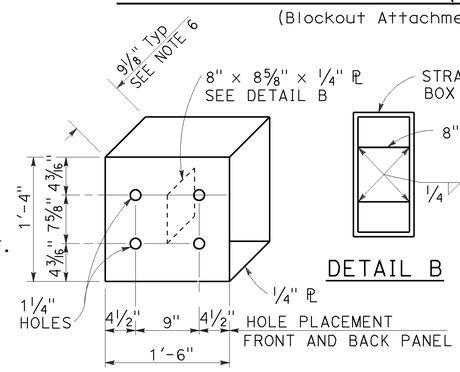

DETAIL A

STRAIGHT METAL BOX SPACER

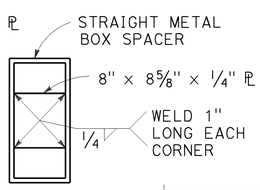

DETAIL B

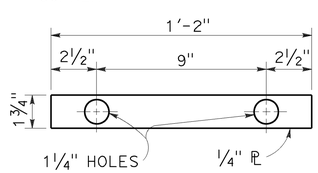

DETAIL C

PLATE 'A'

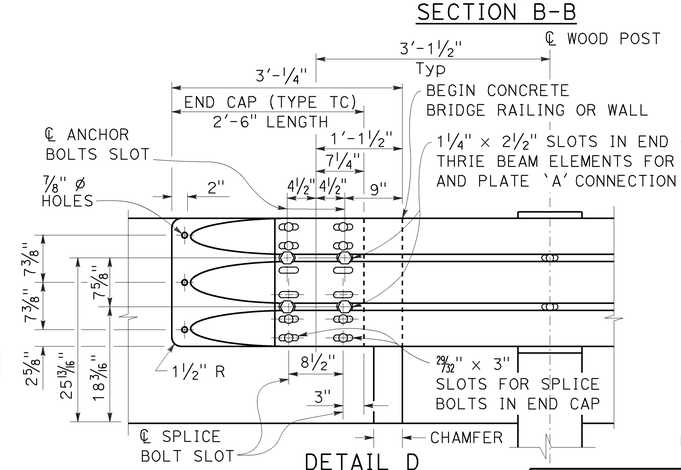

DETAIL D

NOTES:

TO ACCOMPANY PLANS DATED 8-10-15

1. Use 5/8" ø Button head bolts and hex nuts for connections to posts. No washer on rail face for bolted connections to post.
2. The nested rail elements, end cap, and 'W' beam to thrie beam element may be spliced together prior to bolting the elements to the wood post and concrete barrier or railing.
3. Exterior splice bolt holes for rail element splices at Post No. T5 and the connection to the concrete barrier or railing shall be the standard 29/32" x 1 1/8" slot size. Interior splice bolt holes at these locations may be increased up to 1 1/4" ø. Only the top 4 and the bottom 4 splice bolts with washers and nuts are required for rail splices at Post No. T5 and the connection to the concrete barrier or railing.
4. The top elevation of Posts No. T2 through No. T7 shall not project more than 1" above the top elevation of the rail element.
5. Typically, the railing connected to Transition Railing (Type WB-31) will be either standard railing section of MGS with height transition ratio of 150:1 or a Caltrans approved 31" end treatment attached to Post No. T1.
6. The depth of the metal box spacer varies from the 9 1/8" to 1 1/2" and is dependent on the width of the concrete railing or wall. The combined dimension for the depth of the metal box spacer plus the width of railing or wall is typically 21 1/8". Where the space between the backside of the concrete railing or wall and the rear thrie beam element is less than 1 1/2", metal plates similar to Plate 'A' are to be used as spacers.
7. Where the width of the concrete railing or wall is greater than 17 1/8", wood blocks are to be used to fill the space created between the backside of Posts No. T5 through No. T8 and the rear thrie beam element. These wood blocks shall be 8" in width and 1'-2" in length. The dimension between the front thrie beam element and the rear thrie beam element is to match the width of the concrete railing or wall.
8. End cap may be installed over 12 gauge and 10 gauge thrie beam elements where transition railing is installed on the departure end of bridge railing.
9. Conform standard railing section height to 31" at Post No. T1 using height transition ratio of 150:1.

STATE OF CALIFORNIA
DEPARTMENT OF TRANSPORTATION

MIDWEST GUARDRAIL SYSTEM TRANSITION RAILING (TYPE WB-31)

NO SCALE

RSP A77U4 DATED JANUARY 23, 2015 SUPERSEDES RSP A77U4 DATED NOVEMBER 15, 2013 AND RSP A77U4 DATED JULY 19, 2013 THAT SUPPLEMENTS THE STANDARD PLANS BOOK DATED 2010.

REVISED STANDARD PLAN RSP A77U4

2010 REVISED STANDARD PLAN RSP A77U4

1-8-15

Dist	COUNTY	ROUTE	POST MILES TOTAL PROJECT	SHEET No.	TOTAL SHEETS
07	LA	91	R11.3/R20.7	153	192

REGISTERED CIVIL ENGINEER

July 19, 2013
PLANS APPROVAL DATE

REGISTERED PROFESSIONAL ENGINEER
Michael Janzen
No. 44788
Exp. 03-31-14
CIVIL
STATE OF CALIFORNIA

THE STATE OF CALIFORNIA OR ITS OFFICERS OR AGENTS SHALL NOT BE RESPONSIBLE FOR THE ACCURACY OR COMPLETENESS OF SCANNED COPIES OF THIS PLAN SHEET.

TO ACCOMPANY PLANS DATED 8-10-15

2010 REVISED STANDARD PLAN RSP A87A

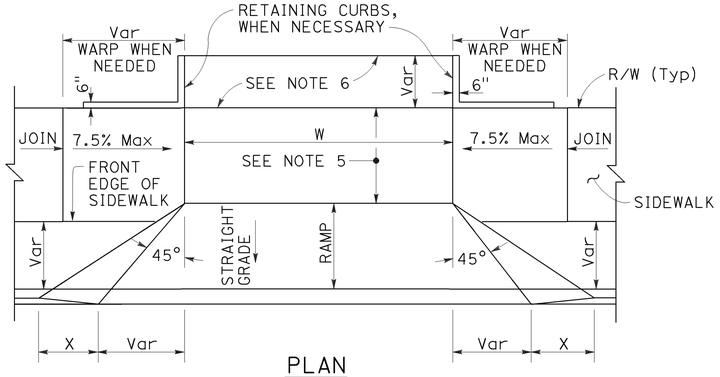

PLAN

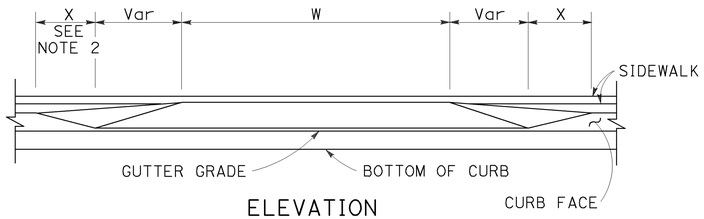

ELEVATION

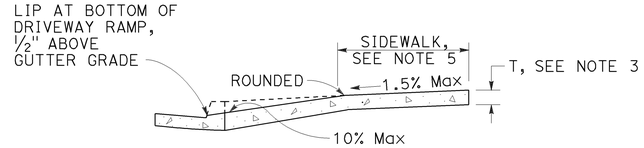

CASE A

Typical driveway, sidewalk not depressed

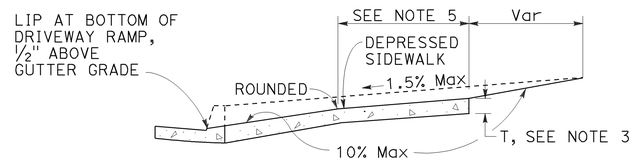

CASE B

Driveway with depressed sidewalk

SECTIONS

DRIVEWAYS

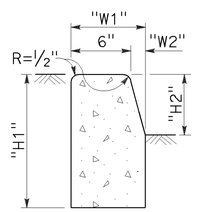

TYPE A1 CURBS

See Table A

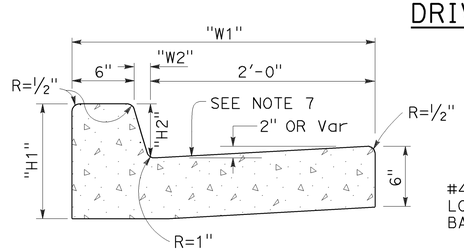

TYPE A2 CURBS

See Table A

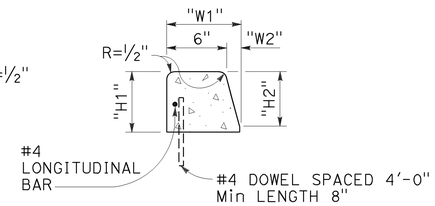

TYPE A3 CURBS

Superimposed on existing pavement
See Table A

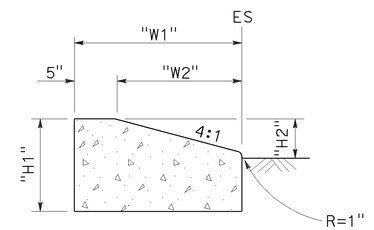

TYPE D CURBS

See Table A

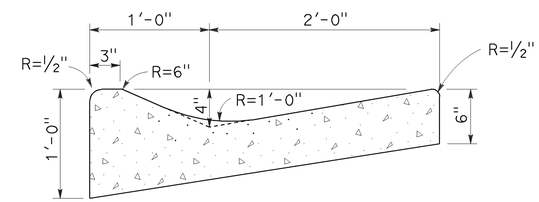

TYPE E CURB

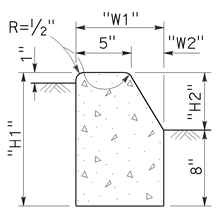

TYPE B1 CURBS

See Table A

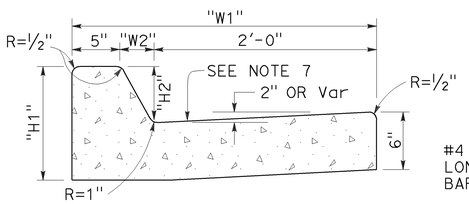

TYPE B2 CURBS

See Table A

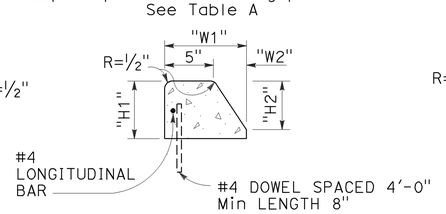

TYPE B3 CURBS

Superimposed on existing pavement
See Table A

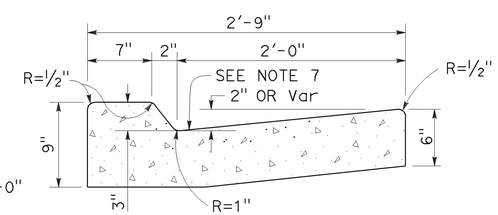

TYPE B4 CURBS

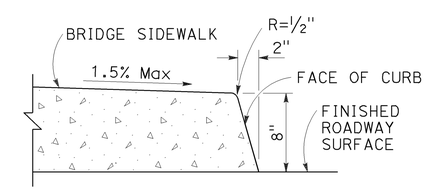

TYPE H CURB

On Bridges

CURBS

TABLE A

CURB TYPE	DIMENSIONS			
	"H1"	"H2"	"W1"	"W2"
A1-6	1'-2"	6"	7½"	1½"
A1-8	1'-4"	8"	8"	2"
A2-6	1'-0"	6"	2'-7½"	1½"
A2-8	1'-2"	8"	2'-8"	2"
A3-6	6"	5"	7¼"	1¼"
A3-8	8"	7"	7¾"	1¾"
B1-4	1'-0"	4"	7½"	2½"
B1-6	1'-2"	6"	9"	4"
B2-4	10"	4"	2'-7½"	2½"
B2-6	1'-0"	6"	2'-9"	4"
B3-4	4"	3"	7"	2"
B3-6	6"	5"	8½"	3½"
D-4	10"	4"	1'-6"	1'-1"
D-6	1'-0"	6"	2'-2"	1'-9"

CURB QUANTITIES

TYPE	CUBIC YARDS PER LINEAR FOOT
A1-6	0.02585
A1-8	0.03084
A2-6	0.05903
A2-8	0.06379
A3-6	0.01036
A3-8	0.01435
B1-4	0.02185
B1-6	0.02930
B2-4	0.05515
B2-6	0.06171
B3-4	0.00641
B3-6	0.01074
B4	0.05709
D-4	0.04083
D-6	0.06804
E	0.06661

NOTES:

1. Case A driveway section typically applies.
2. X=3'-0" except for curb heights over 10" where 4:1 slopes shall be used on curb slope.
3. Sidewalk and ramp thickness "T" at driveway shall be 4" for residental and 6" for commercial.
4. Difference in slope of the driveway ramp and the slope of a line between the gutter and a point on the roadway 5'-0" from gutter line shall not exceed 15%. Reduce driveway ramp slope, not gutter slope, where required.
5. Minimum width of clear passageway for sidewalk shall be 4'-2".
6. Retaining curbs and acquisition of construction easement may be necessary for narrow sidewalks or curb heights in excess of 6".
7. Across the pedestrian route at curb ramp locations, the gutter pan slope shall not exceed 1" of depth for each 2'-0" of width.

STATE OF CALIFORNIA
DEPARTMENT OF TRANSPORTATION

CURBS AND DRIVEWAYS

NO SCALE

RSP A87A DATED JULY 19, 2013 SUPERSEDES STANDARD PLAN A87A
DATED MAY 20, 2011 - PAGE 119 OF THE STANDARD PLANS BOOK DATED 2010.

REVISED STANDARD PLAN RSP A87A

Dist	COUNTY	ROUTE	POST MILES TOTAL PROJECT	SHEET No.	TOTAL SHEETS
07	LA	91	R11.3/R20.7	154	192

REGISTERED CIVIL ENGINEER

July 19, 2013
PLANS APPROVAL DATE

REGISTERED PROFESSIONAL ENGINEER
Michael Janzen
No. 44788
Exp. 03-31-14
CIVIL
STATE OF CALIFORNIA

THE STATE OF CALIFORNIA OR ITS OFFICERS OR AGENTS SHALL NOT BE RESPONSIBLE FOR THE ACCURACY OR COMPLETENESS OF SCANNED COPIES OF THIS PLAN SHEET.

TO ACCOMPANY PLANS DATED 8-10-15

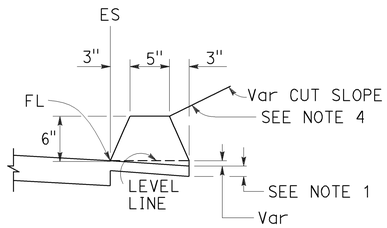

TYPE A
See Note 3

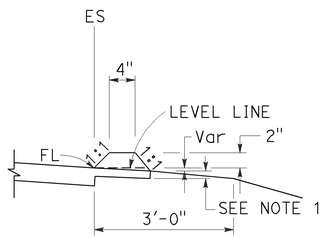

TYPE C

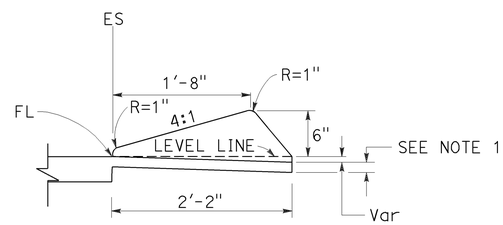

TYPE D

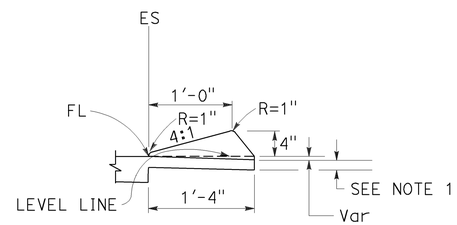

TYPE E

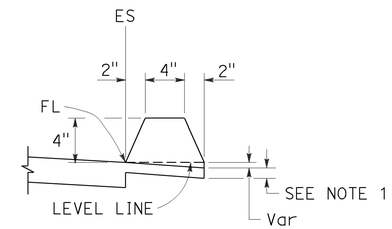

TYPE F
See Note 5

DIKES

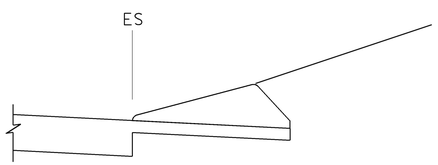

CASE C-1
Cut Slope

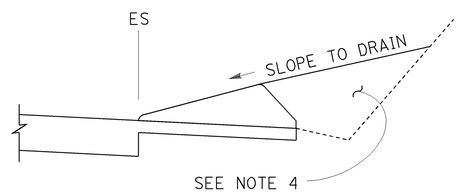

CASE C-2
Cut Slope

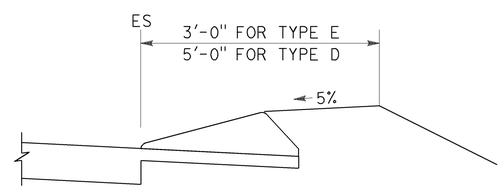

CASE F

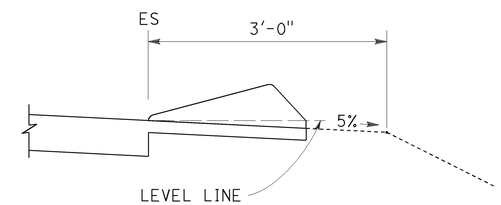

CASE R
See Note 2

TYPE D AND E BACKFILL DETAILS

NOTES:

1. For HMA shoulders only, extend top layer of HMA placed on the shoulder under dike with no joint at the ES. For projects with OGFC shoulders, do not extend OGFC under dike. See project plans for modified dike detail.
2. Case R applies to retrofit only projects where restrictive conditions do not provide enough width for Case F backfill.
3. Type A dike only to be used where restrictive slope conditions do not provide enough width to use Type D or Type E dike.
4. Fill and compact with excavated material to top of dike.
5. Use Type F dike, where dike is required with guard railing installations. See Revised Standard Plan RSP A77N4 for dike positioning details.

DIKE QUANTITIES

TYPE	CUBIC YARDS PER LINEAR FOOT
A	0.0135
C	0.0038
D	0.0293
E	0.0130
F	0.0066

Quantities based on 5% cross slope.

STATE OF CALIFORNIA
DEPARTMENT OF TRANSPORTATION

HOT MIX ASPHALT DIKES

NO SCALE

RSP A87B DATED JULY 19, 2013 SUPERSEDES STANDARD PLAN A87B DATED MAY 20, 2011 - PAGE 120 OF THE STANDARD PLANS BOOK DATED 2010.

REVISED STANDARD PLAN RSP A87B

2010 REVISED STANDARD PLAN RSP A87B

6-27-13

Dist	COUNTY	ROUTE	POST MILES TOTAL PROJECT	SHEET No.	TOTAL SHEETS
07	LA	91	R11.3/R20.7	155	192

REGISTERED CIVIL ENGINEER

July 3, 2015
PLANS APPROVAL DATE

REGISTERED PROFESSIONAL ENGINEER Hector David Cordova No. C41957 Exp. 3-31-16 CIVIL STATE OF CALIFORNIA

THE STATE OF CALIFORNIA OR ITS OFFICERS OR AGENTS SHALL NOT BE RESPONSIBLE FOR THE ACCURACY OR COMPLETENESS OF SCANNED COPIES OF THIS PLAN SHEET.

TO ACCOMPANY PLANS DATED 8-10-15

2010 REVISED STANDARD PLAN RSP A88A

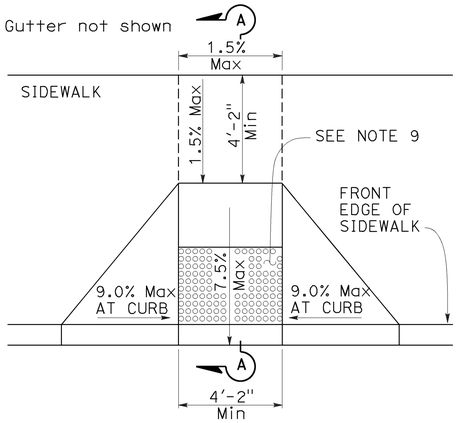

CASE A

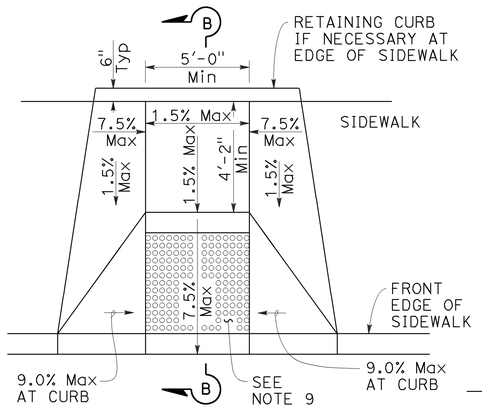

CASE B

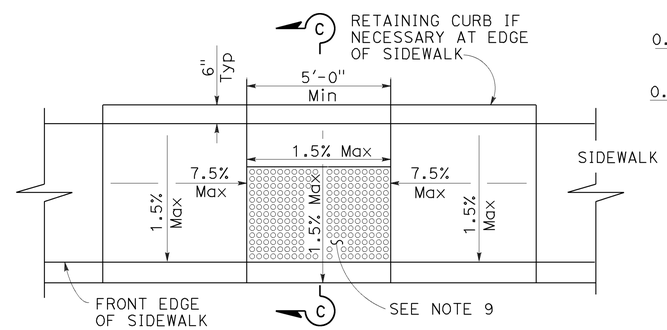

CASE C

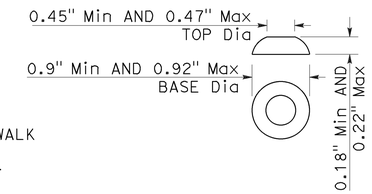

RAISED TRUNCATED DOME

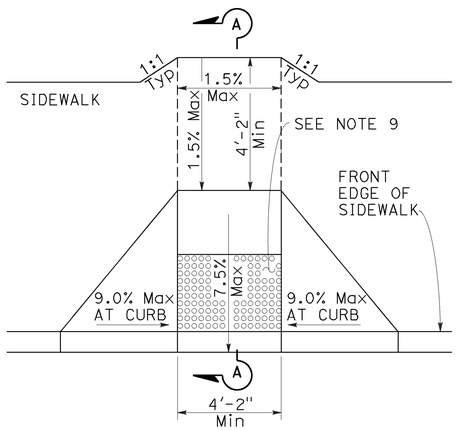

CASE D

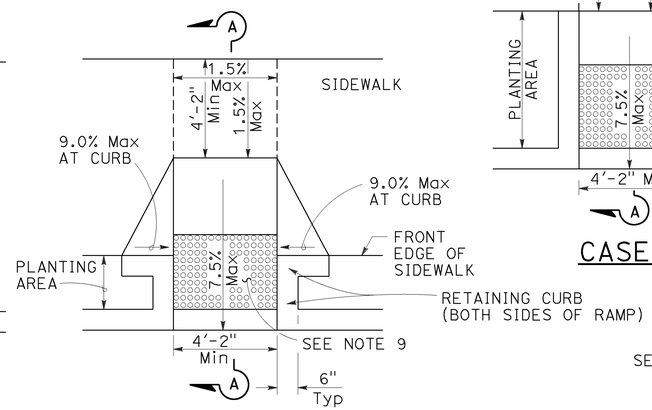

CASE E

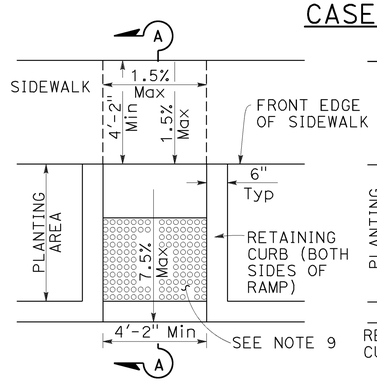

CASE F

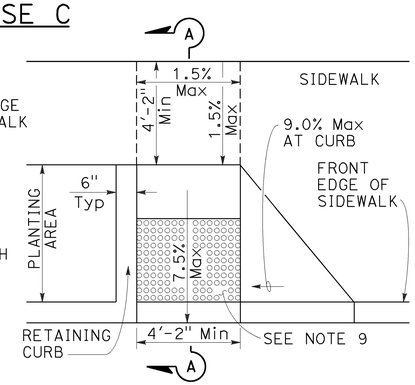

CASE G
See Note 4

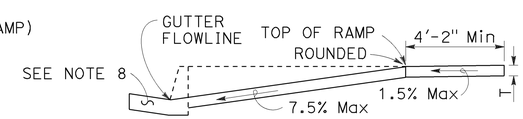

SECTION A-A

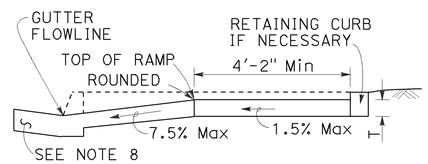

SECTION B-B
Depress entire sidewalk as required

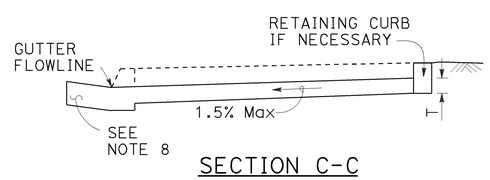

SECTION C-C

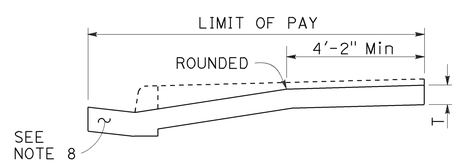

RETROFIT PAY LIMITS
Existing curb and sidewalk

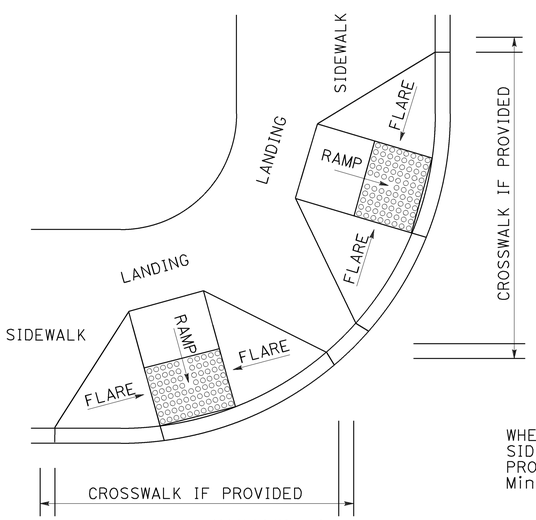

DETAIL A

TYPICAL TWO-RAMP CORNER INSTALLATION

See Note 1

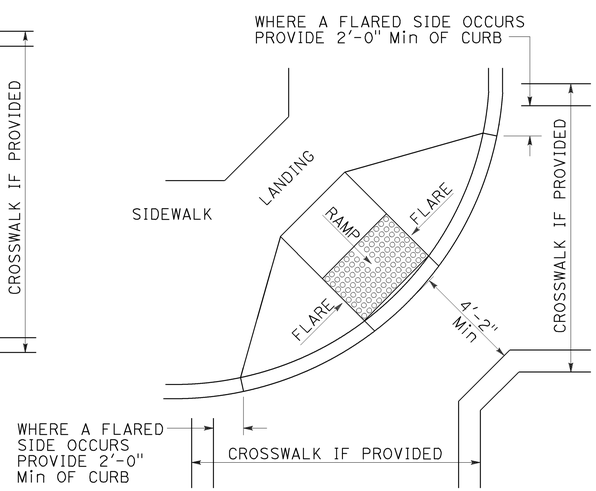

DETAIL B

TYPICAL ONE-RAMP CORNER INSTALLATION

See Notes 1 and 3

NOTES:

1. As site conditions dictate, Case A through Case G curb ramps may be used for corner installations similar to those shown in Detail A and Detail B. The case of curb ramps used in Detail A do not have to be the same. Case A through Case G curb ramps also may be used at mid block locations, as site conditions dictate.
2. If distance from curb to back of sidewalk is too short to accommodate ramp and 4'-2" platform (landing) as shown in Case A, the sidewalk may be depressed longitudinally as in Case B, or C or may be widened as in Case D.
3. When ramp is located in center of curb return, crosswalk configuration must be similar to that shown for Detail B.
4. As site conditions dictate, the retaining curb side and the flared side of the Case G ramp shall be constructed in reversed position.
5. If located on a curve, the sides of the ramp need not be parallel, but the minimum width of the ramp shall be 4'-2".
6. Side slope of ramp flares vary uniformly from a maximum of 9.0% at curb to conform with longitudinal sidewalk slope adjacent to top of the ramp, except in Case C and Case F.
7. Transitions from ramps and landing to walks, gutters or streets shall be flush (no lip) and free of abrupt changes.
8. Counter slopes of adjoining gutters and road surfaces immediately adjacent to and within 24 inches of the curb ramp shall not be steeper than 1:20 (5.0%). Gutter pan slope shall not exceed 1" of depth for each 2'-0" of width.
9. Curb ramps shall have a detectable warning surface that extends the full width and 3'-0" depth of the ramp. A 4'-0" wide detectable warning surface may be used on a 4'-2" wide curb ramp. Detectable Warning Surfaces shall conform to the requirements in the Standard Specifications.
10. Sidewalk and ramp thickness, "T", shall be 3½" minimum.
11. Utility pull boxes, manholes, vaults and all other utility facilities within the boundaries of the curb ramp will be relocated or adjusted to grade by the owner prior to, or in conjunction with, curb ramp construction.
12. Detectable warning surface may have to be cut to allow removal of utility covers while maintaining full detectable warning width and depth.

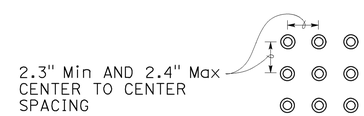

RAISED TRUNCATED DOME PATTERN (IN-LINE)

DETECTABLE WARNING SURFACE

See Note 9

STATE OF CALIFORNIA
DEPARTMENT OF TRANSPORTATION

CURB RAMP DETAILS

NO SCALE

RSP A88A DATED JULY 3, 2015 SUPERSEDES RSP A88A DATED MARCH 21, 2014 AND RSP A88A DATED JULY 19, 2013 AND STANDARD PLAN A88A DATED MAY 20, 2011 - PAGE 121 OF THE STANDARD PLANS BOOK DATED 2010.

REVISED STANDARD PLAN RSP A88A

6-30-15

Dist	COUNTY	ROUTE	POST MILES TOTAL PROJECT	SHEET No.	TOTAL SHEETS
07	LA	91	R11.3/R20.7	156	192

REGISTERED CIVIL ENGINEER

July 3, 2015
PLANS APPROVAL DATE

REGISTERED PROFESSIONAL ENGINEER Hector David Cordova No. C41957 Exp. 3-31-16 CIVIL STATE OF CALIFORNIA

THE STATE OF CALIFORNIA OR ITS OFFICERS OR AGENTS SHALL NOT BE RESPONSIBLE FOR THE ACCURACY OR COMPLETENESS OF SCANNED COPIES OF THIS PLAN SHEET.

TO ACCOMPANY PLANS DATED 8-10-15

Gutter not shown

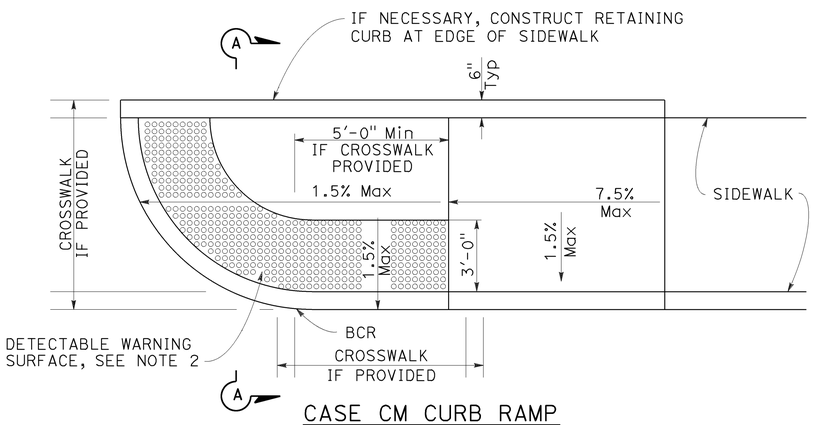

CASE CM CURB RAMP

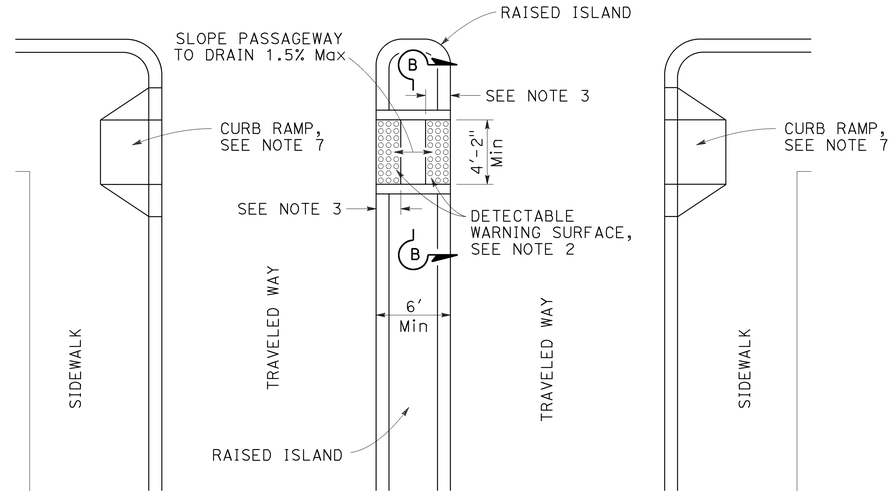

TYPE A PASSAGEWAY

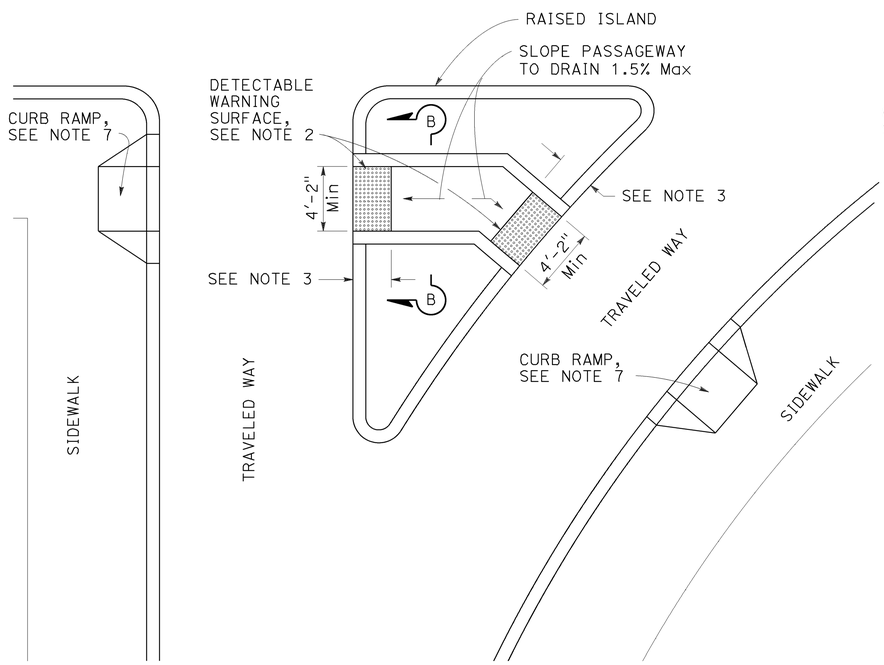

TYPE B PASSAGEWAY

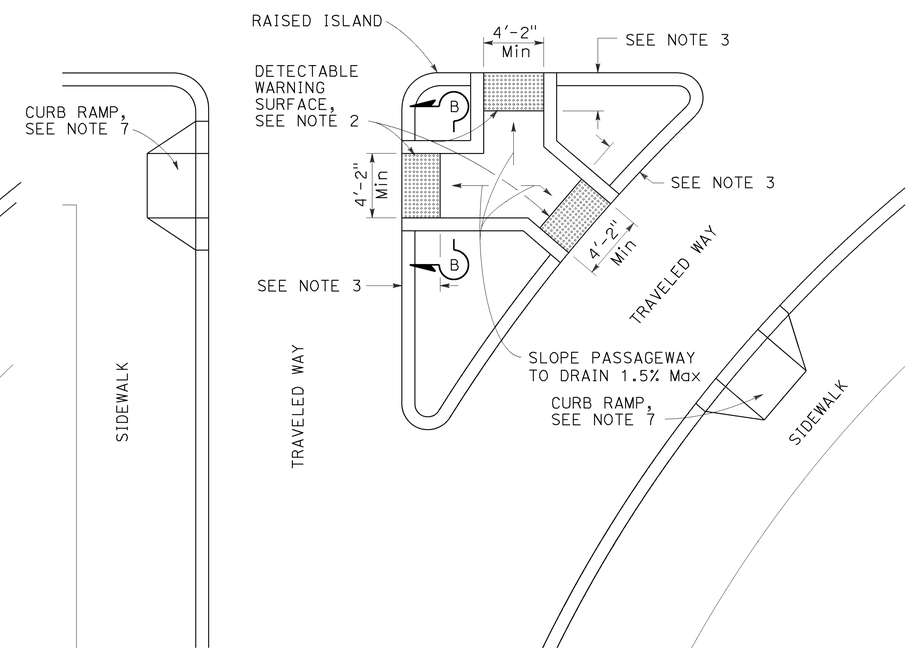

TYPE C PASSAGEWAY

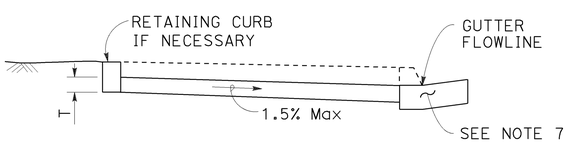

SECTION A-A

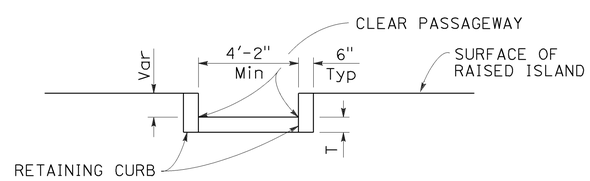

SECTION B-B

NOTES:

1. Sidewalk, ramp and passageway thickness, "T", shall be 3½" minimum.
2. For details of detectable warning surfaces, see Revised Standard Plan RSP A88A.
3. Where an island passageway length is greater than or equal to 6'-0", but less than 8'-0", each detectable warning surface shall extend the full width and 2'-0" depth of the passageway length. Where an island passageway length is greater than or equal to 8'-0", each detectable warning surface shall extend the full width and 3'-0" depth of the passageway length. A 4'-0" wide detectable warning surface may be used on a 4'-2" wide island passageway.
4. Transitions from ramps to walks, gutters or streets shall be flush (no lip) and free of abrupt changes.
5. Utility pull boxes, manholes, vaults and all other utility facilities within the boundaries of the curb ramp will be relocated or adjusted to grade by the owner prior to, or in conjunction with, curb ramp construction.
6. Detectable warning surface may have to be cut to allow removal of utility covers while maintaining full detectable warning width and depth.
7. For additional curb ramp details, see Revised Standard Plan RSP A88A.

STATE OF CALIFORNIA
DEPARTMENT OF TRANSPORTATION

CURB RAMP AND ISLAND PASSAGEWAY DETAILS

NO SCALE

RSP A88B DATED JULY 3, 2015 SUPERSEDES RSP A88B DATED MARCH 21, 2014 AND RSP A88B DATED JULY 19, 2013 AND STANDARD PLAN A88B DATED MAY 20, 2011 - PAGE 122 OF THE STANDARD PLANS BOOK DATED 2010.

REVISED STANDARD PLAN RSP A88B

2010 REVISED STANDARD PLAN RSP A88B

4-28-15

Dist	COUNTY	ROUTE	POST MILES TOTAL PROJECT	SHEET No.	TOTAL SHEETS
07	LA	91	R11.3/R20.7	157	192

William K. Farnbach
REGISTERED CIVIL ENGINEER

July 19, 2013
PLANS APPROVAL DATE

REGISTERED PROFESSIONAL ENGINEER
William K. Farnbach
No. C49042
Exp. 9-30-14
CIVIL
STATE OF CALIFORNIA

THE STATE OF CALIFORNIA OR ITS OFFICERS OR AGENTS SHALL NOT BE RESPONSIBLE FOR THE ACCURACY OR COMPLETENESS OF SCANNED COPIES OF THIS PLAN SHEET.

TO ACCOMPANY PLANS DATED 8-10-15

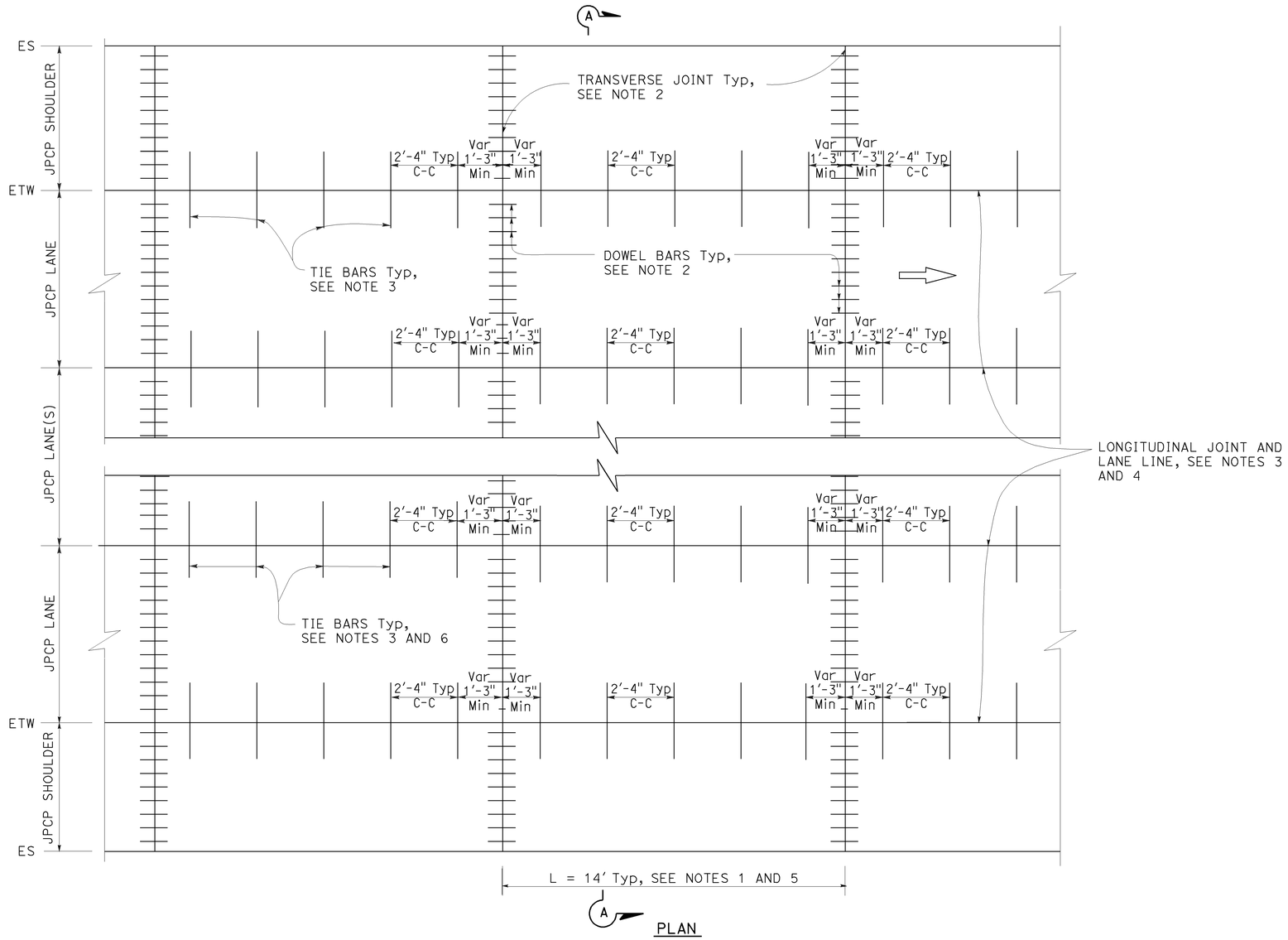

PLAN

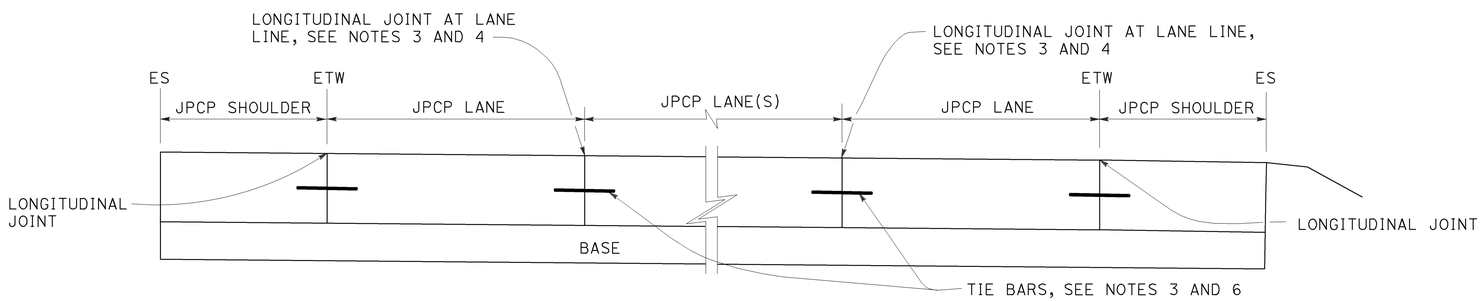

SECTION A-A

NOTES:

1. Transverse joint spacing may be adjusted to no less than 10' and no more than 14' to conform to bridges, change in pavement type, and hardened concrete pavement.
2. For transverse joint and dowel bar details not shown, see Revised Standard Plan RSP P10.
3. For longitudinal joint and tie bar details not shown, see Revised Standard Plan RSP P15.
4. For additional longitudinal joint layout details, see Revised Standard Plan RSP P18.
5. For joint layout at intersections, see Project Plans.
6. For dowel bars at longitudinal joint. see Revised Standard Plan RSP P18.

STATE OF CALIFORNIA
DEPARTMENT OF TRANSPORTATION

JOINTED PLAIN CONCRETE PAVEMENT NEW CONSTRUCTION

NO SCALE

RSP P1 DATED JULY 19, 2013 SUPERSEDES STANDARD PLAN P1
DATED MAY 20, 2011 - PAGE 125 OF THE STANDARD PLANS BOOK DATED 2010.

REVISED STANDARD PLAN RSP P1

2010 REVISED STANDARD PLAN RSP P1

5-31-13

Dist	COUNTY	ROUTE	POST MILES TOTAL PROJECT	SHEET No.	TOTAL SHEETS
07	LA	91	R11.3/R20.7	158	192

William K. Farnbach
REGISTERED CIVIL ENGINEER

July 19, 2013
PLANS APPROVAL DATE

REGISTERED PROFESSIONAL ENGINEER William K. Farnbach No. C49042 Exp. 9-30-14 CIVIL STATE OF CALIFORNIA

THE STATE OF CALIFORNIA OR ITS OFFICERS OR AGENTS SHALL NOT BE RESPONSIBLE FOR THE ACCURACY OR COMPLETENESS OF SCANNED COPIES OF THIS PLAN SHEET.

TO ACCOMPANY PLANS DATED 8-10-15

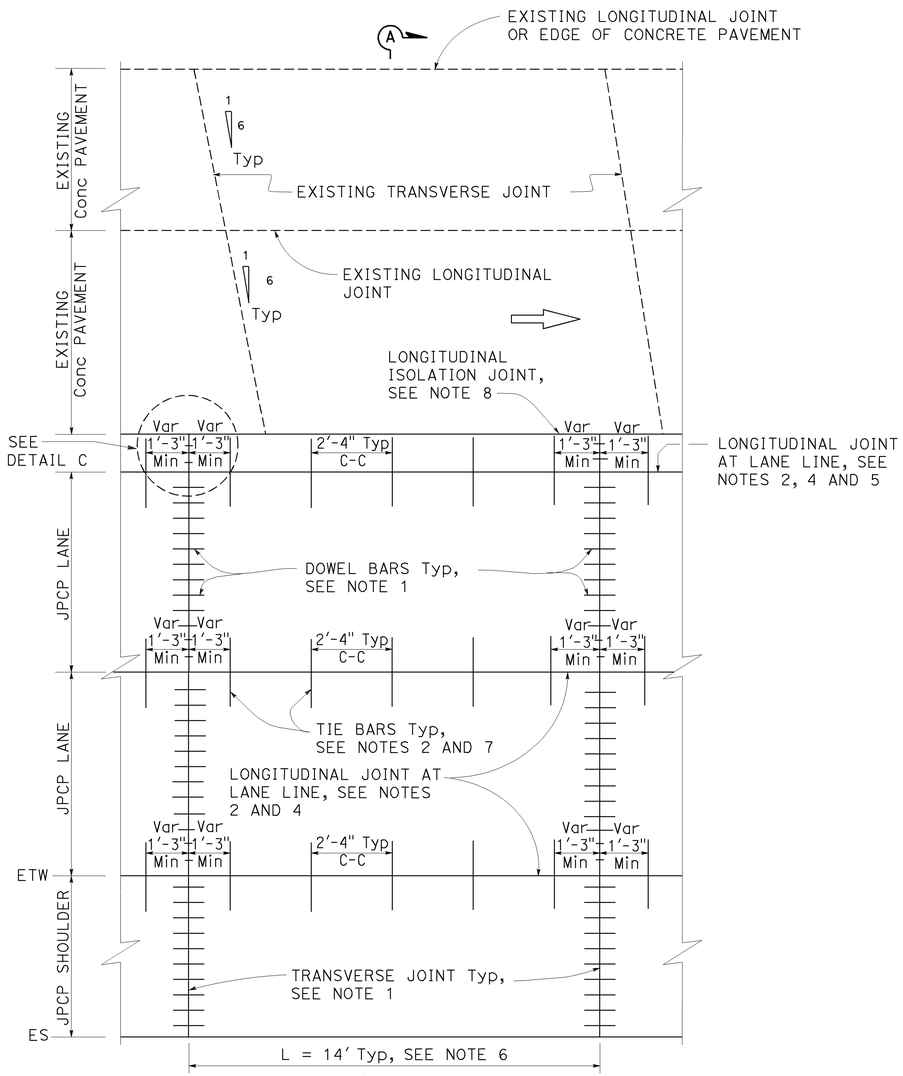

PLAN
ISOLATED
See Note 3

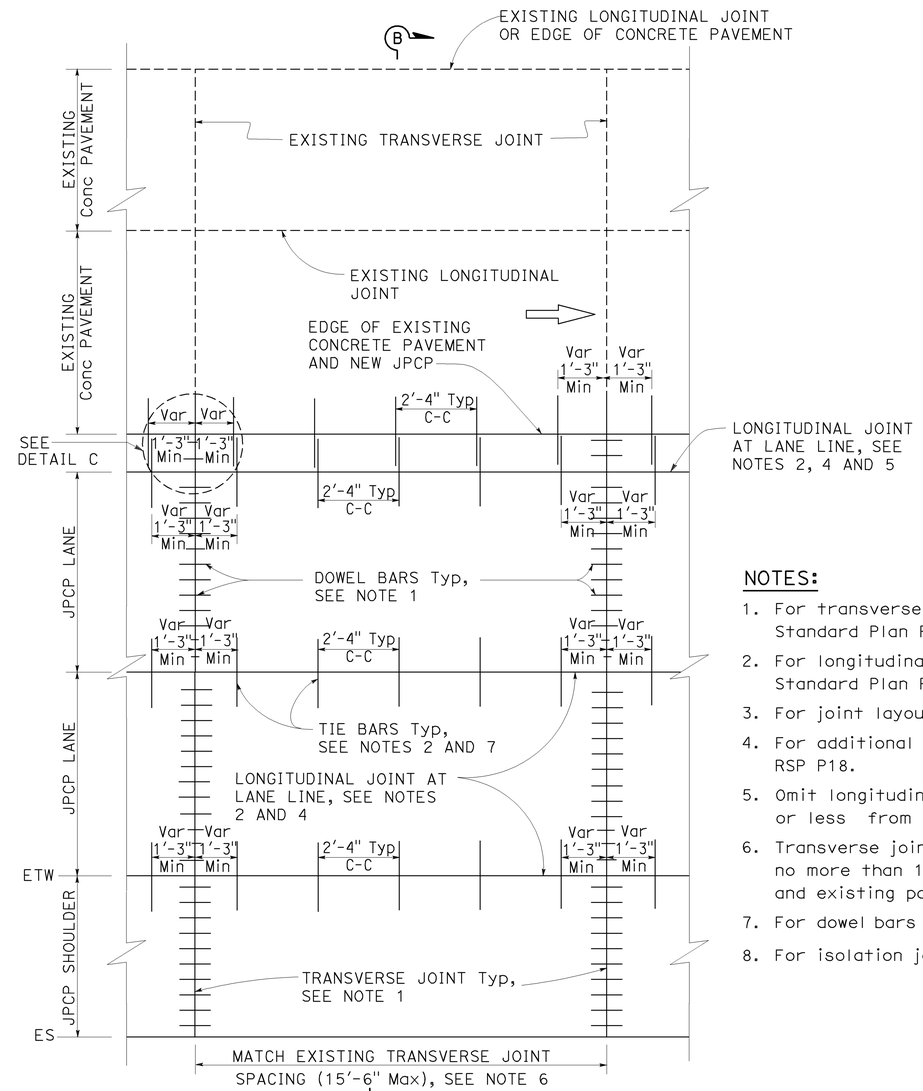

PLAN
TIED
See Note 3

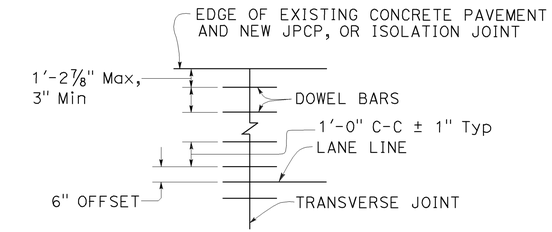

DETAIL C

NOTES:

1. For transverse joint and dowel bar details not shown, see Revised Standard Plan RSP P10.
2. For longitudinal joint and tie bar details not shown, see Revised Standard Plan RSP P15.
3. For joint layout at intersections, see Project Plans.
4. For additional longitudinal joint details, see Revised Standard Plan RSP P18.
5. Omit longitudinal joint when edge of new concrete pavement is 3'-3" or less from JPCP lane line.
6. Transverse joint spacing may be adjusted to no less than 10' and no more than 15'-6" to conform to bridges, change in pavement type and existing pavement.
7. For dowel bars at longitudinal joint. see Revised Standard Plan RSP P18.
8. For isolation joints, see Detail A on Revised Standard Plan RSP P18.

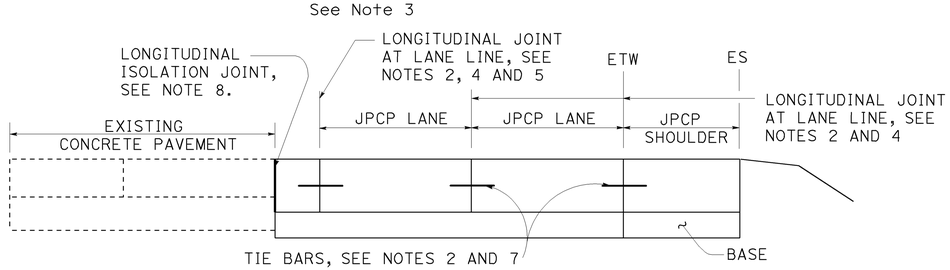

SECTION A-A

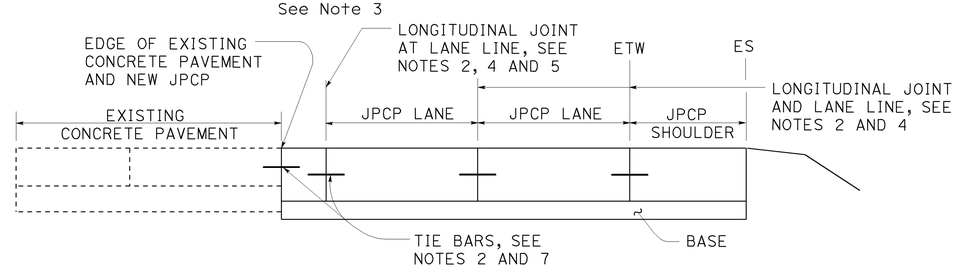

SECTION B-B

STATE OF CALIFORNIA
DEPARTMENT OF TRANSPORTATION

JOINTED PLAIN CONCRETE PAVEMENT LANE & SHOULDER ADDITION OR REPLACEMENT

NO SCALE

RSP P3A DATED JULY 19, 2013 SUPPLEMENTS THE STANDARD PLANS BOOK DATED 2010.

REVISED STANDARD PLAN RSP P3A

2010 REVISED STANDARD PLAN RSP P3A

5-31-13

Dist	COUNTY	ROUTE	POST MILES TOTAL PROJECT	SHEET No.	TOTAL SHEETS
07	LA	91	R11.3/R20.7	159	192

William K. Farnbach
REGISTERED CIVIL ENGINEER

July 19, 2013
PLANS APPROVAL DATE

REGISTERED PROFESSIONAL ENGINEER
William K. Farnbach
No. C49042
Exp. 9-30-14
CIVIL
STATE OF CALIFORNIA

THE STATE OF CALIFORNIA OR ITS OFFICERS OR AGENTS SHALL NOT BE RESPONSIBLE FOR THE ACCURACY OR COMPLETENESS OF SCANNED COPIES OF THIS PLAN SHEET.

TO ACCOMPANY PLANS DATED 8-10-15

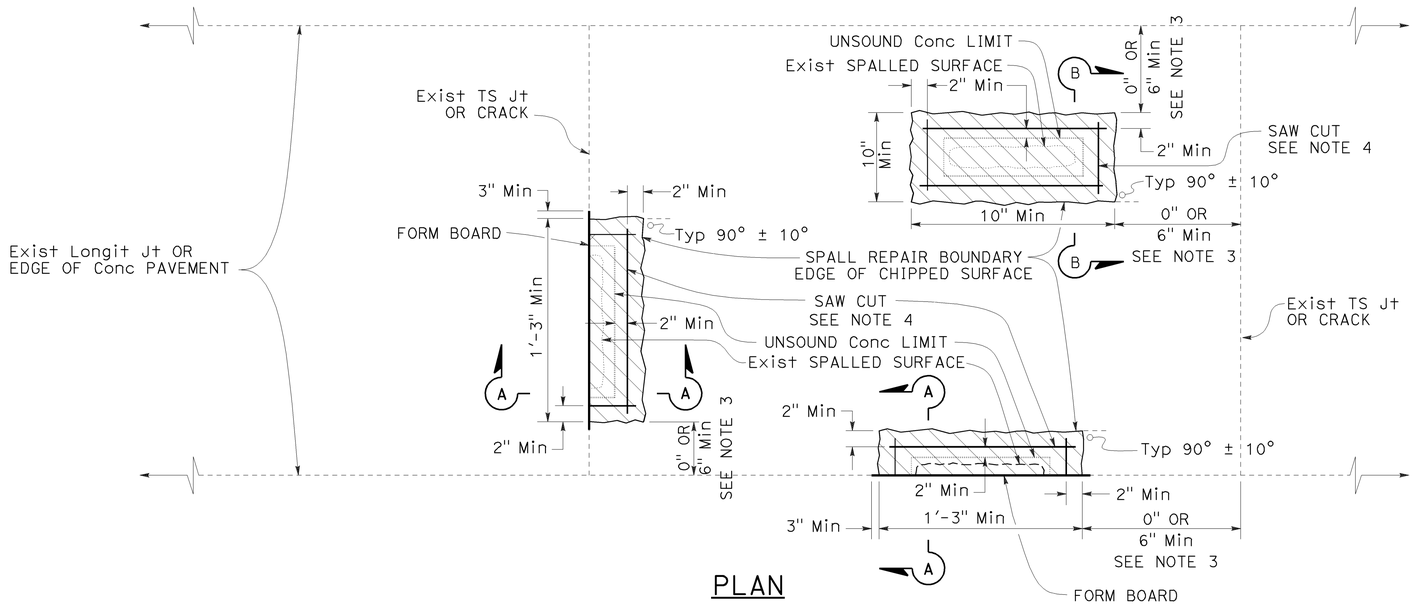

PLAN

LEGEND

SPALL REPAIR

NOTES:

1. See Project Plans for spall repair locations.
2. Combine spall repair areas closer than 2' apart.
3. If the spall repair area is less than 6" from a joint, extend the repair to the joint.
4. Cut at least 2" beyond the rectangular limits of unsound concrete determined by the Engineer. Determine the saw cut depth using the following table:

Conc MATERIAL	SAW CUT DEPTH	
	Min	Max
FAST-SETTING	2"	3½"
POLYESTER	1½"	3½"

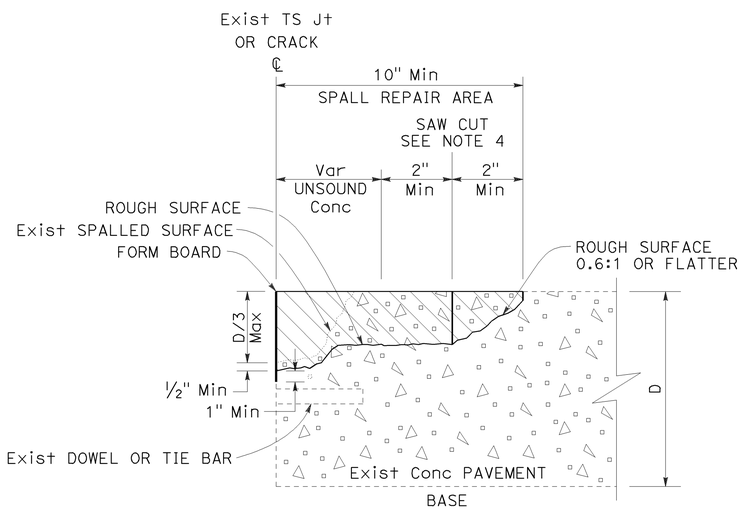

SECTION A-A

JOINT, CRACK, OR EDGE OF CONCRETE PAVEMENT REPAIR

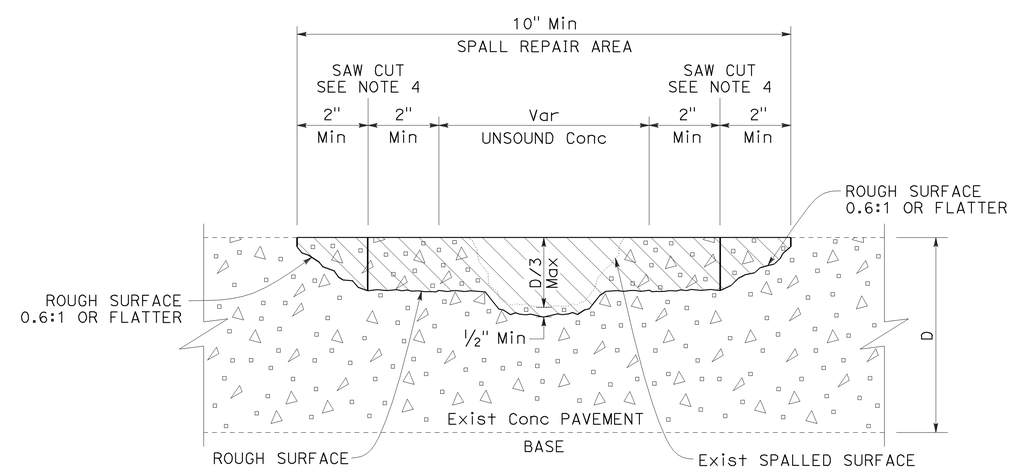

SECTION B-B

MISCELLANEOUS SPALL REPAIR

STATE OF CALIFORNIA
DEPARTMENT OF TRANSPORTATION

SPALL REPAIR

NO SCALE

RSP P6 DATED JULY 19, 2013 SUPPLEMENTS THE STANDARD PLANS BOOK DATED 2010.

REVISED STANDARD PLAN RSP P6

2010 REVISED STANDARD PLAN RSP P6

5-31-13

Dist	COUNTY	ROUTE	POST MILES TOTAL PROJECT	SHEET No.	TOTAL SHEETS
07	LA	91	R11.3/R20.7	160	192

William K. Farnbach
REGISTERED CIVIL ENGINEER

July 19, 2013
PLANS APPROVAL DATE

REGISTERED PROFESSIONAL ENGINEER William K. Farnbach No. C49042 Exp. 9-30-14 CIVIL STATE OF CALIFORNIA

THE STATE OF CALIFORNIA OR ITS OFFICERS OR AGENTS SHALL NOT BE RESPONSIBLE FOR THE ACCURACY OR COMPLETENESS OF SCANNED COPIES OF THIS PLAN SHEET.

TO ACCOMPANY PLANS DATED 8-10-15

2010 REVISED STANDARD PLAN RSP P7

NOTES:

1. Details for skewed joints also apply to perpendicular joints.
2. Use 1′-6" ± 1/4" long dowel bars with a 1 1/4" diameter except 1" diameter dowel bars may be used if D < 0.70′.
3. Caulk existing transverse joint at bottom and sides of the dowel bar slot prior to placing dowel bar and foam insert.
4. Foam insert thickness must match width of existing transverse joint or crack.

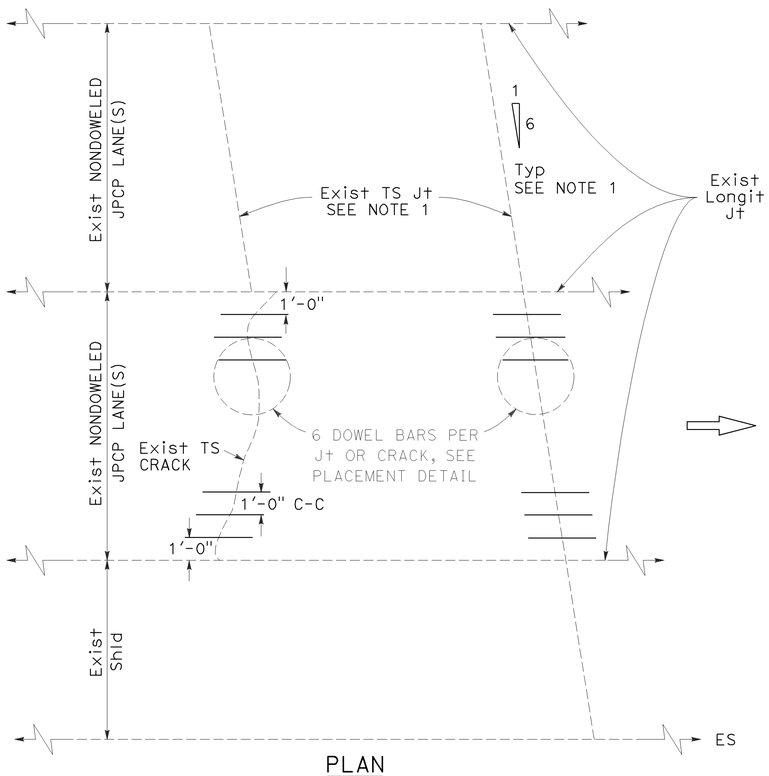

PLAN

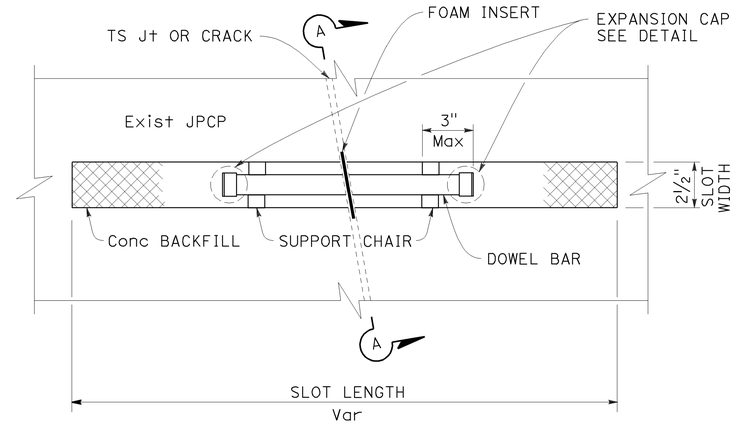

PLAN

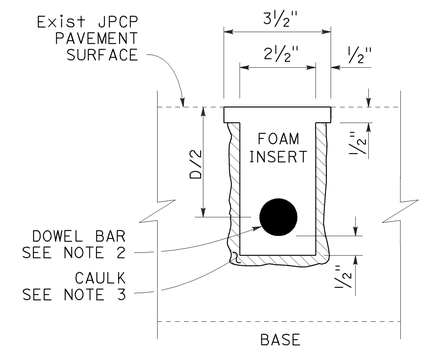

SECTION A-A

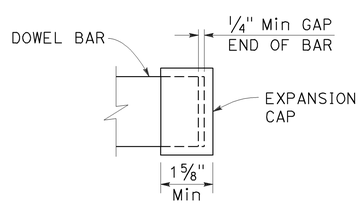

EXPANSION CAP DETAIL

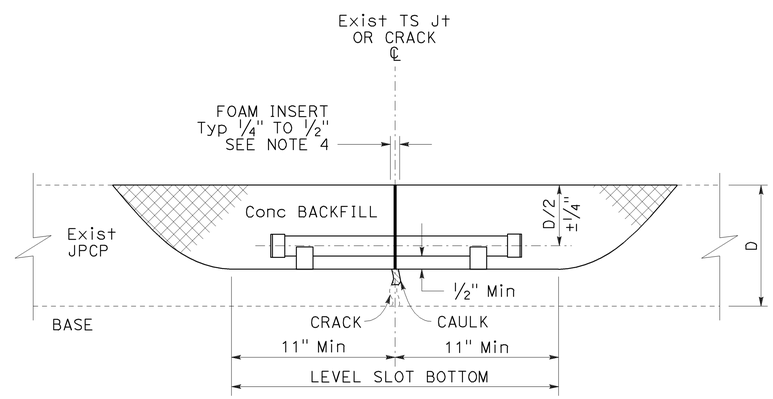

ELEVATION

DOWEL BAR PLACEMENT DETAIL

STATE OF CALIFORNIA
DEPARTMENT OF TRANSPORTATION

DOWEL BAR RETROFIT

NO SCALE

RSP P7 DATED JULY 19, 2013 SUPERSEDES STANDARD PLAN P7
DATED MAY 20, 2011 - PAGE 129 OF THE STANDARD PLANS BOOK DATED 2010.

REVISED STANDARD PLAN RSP P7

6-17-13

Dist	COUNTY	ROUTE	POST MILES TOTAL PROJECT	SHEET No.	TOTAL SHEETS
07	LA	91	R11.3/R20.7	161	192

William K. Farnbach
REGISTERED CIVIL ENGINEER

July 19, 2013
PLANS APPROVAL DATE

REGISTERED PROFESSIONAL ENGINEER William K. Farnbach No. C49042 Exp. 9-30-14 CIVIL STATE OF CALIFORNIA

THE STATE OF CALIFORNIA OR ITS OFFICERS OR AGENTS SHALL NOT BE RESPONSIBLE FOR THE ACCURACY OR COMPLETENESS OF SCANNED COPIES OF THIS PLAN SHEET.

TO ACCOMPANY PLANS DATED 8-10-15

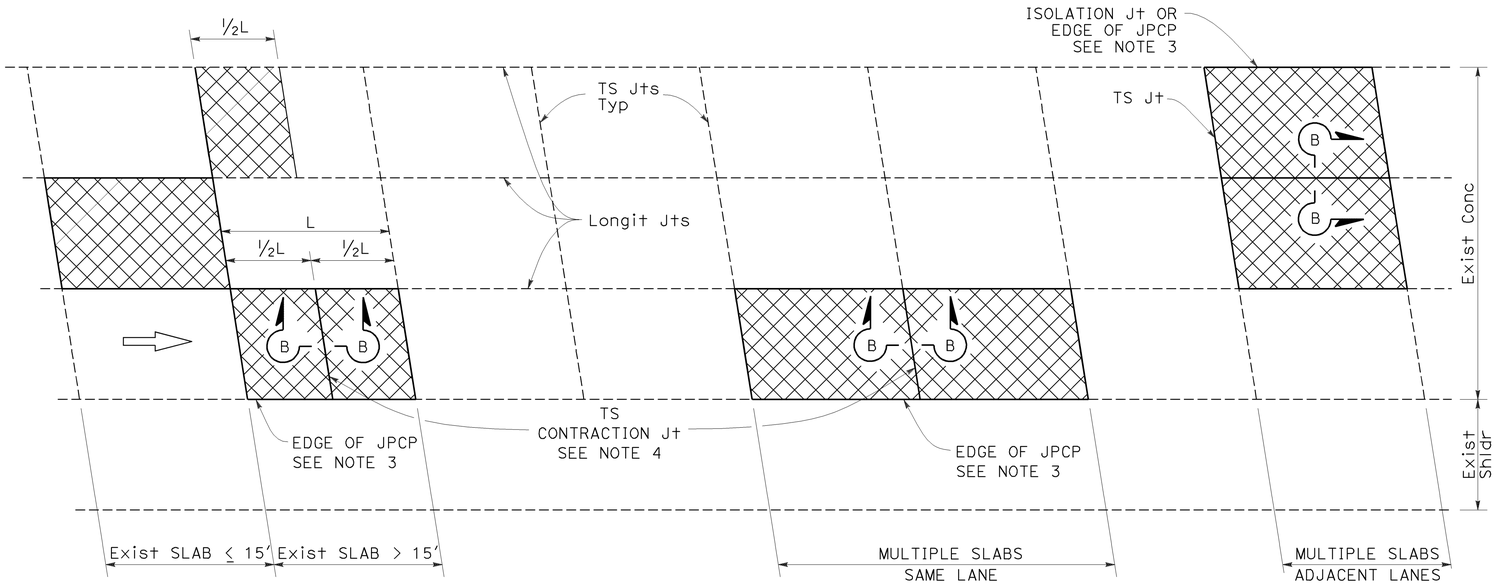

PLAN

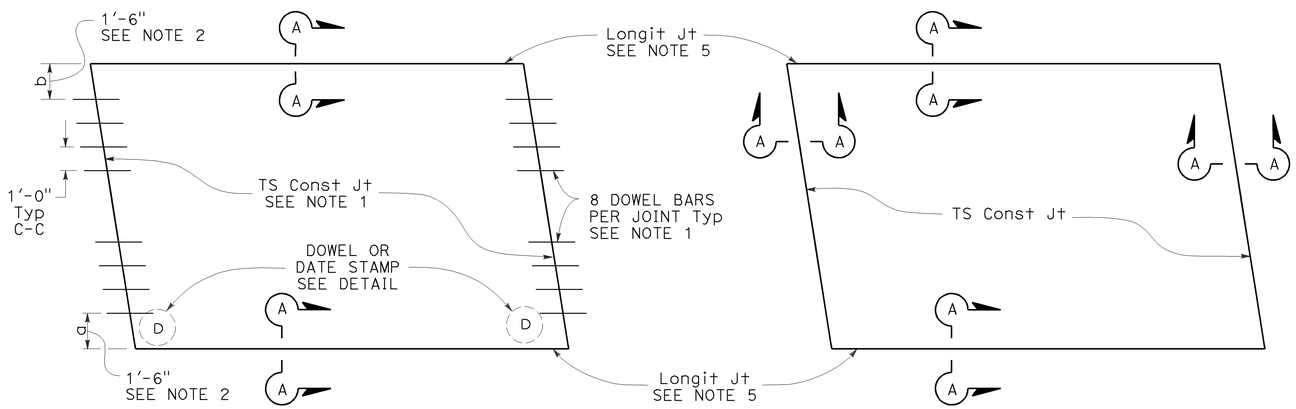

TYPE I
See Design Note 1

TYPE II
See Design Note 2

SLAB LAYOUT

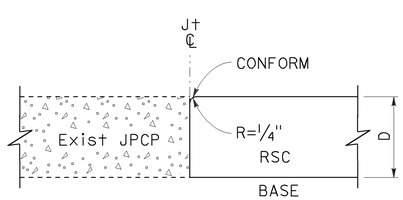

SECTION A-A

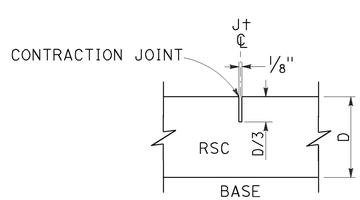

SECTION B-B

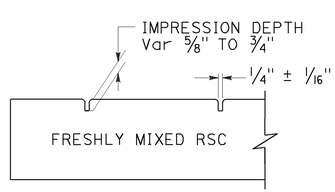

SECTION C-C

LEGEND:

RSC RAPID STRENGTH CONCRETE

INDIVIDUAL SLAB REPLACEMENT WITH RSC

NOTES:

1. For details not shown, see Revised Standard Plan RSP P10.
2. Where the existing outside shoulder is asphalt concrete pavement, "a" = 1'-0" and "b" = 2'-0".
3. Use side forms where edge of RSC pavement is adjacent to asphalt concrete.
4. Transverse contraction joint to match skew of existing joint. Omit dowel bars.
5. Do not place tie bars at longitudinal joints.

DESIGN NOTES:

1. For concrete slab repair with at least 5 years design life.
2. For short term repairs < 5 yrs design life or for slab replacements with cracking and seating.

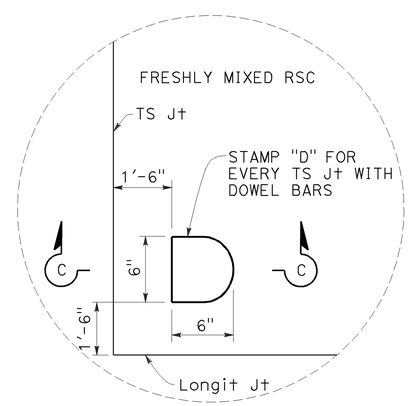

DOWEL STAMP DETAIL

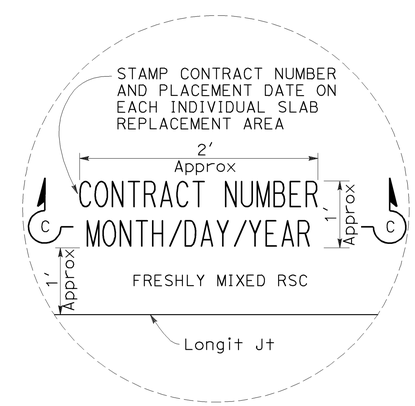

DATE STAMP DETAIL

STATE OF CALIFORNIA
DEPARTMENT OF TRANSPORTATION

INDIVIDUAL SLAB REPLACEMENT WITH RAPID STRENGTH CONCRETE

NO SCALE

RSP P8 DATED JULY 19, 2013 SUPERSEDES RSP P8 DATED APRIL 20, 2012 AND STANDARD PLAN P8 DATED MAY 20, 2011 - PAGE 130 OF THE STANDARD PLANS BOOK DATED 2010.

REVISED STANDARD PLAN RSP P8

2010 REVISED STANDARD PLAN RSP P8

5-31-13

Dist	COUNTY	ROUTE	POST MILES TOTAL PROJECT	SHEET No.	TOTAL SHEETS
07	LA	91	R11.3/R20.7	162	192

William K. Farnbach
REGISTERED CIVIL ENGINEER

July 19, 2013
PLANS APPROVAL DATE

REGISTERED PROFESSIONAL ENGINEER William K. Farnbach No. C49042 Exp. 9-30-14 CIVIL STATE OF CALIFORNIA

THE STATE OF CALIFORNIA OR ITS OFFICERS OR AGENTS SHALL NOT BE RESPONSIBLE FOR THE ACCURACY OR COMPLETENESS OF SCANNED COPIES OF THIS PLAN SHEET.

TO ACCOMPANY PLANS DATED 8-10-15

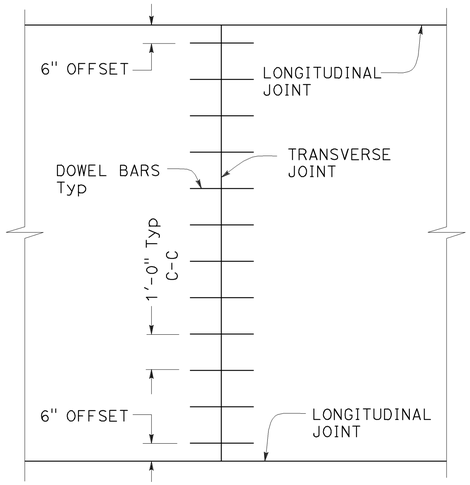

TRANSVERSE JOINT DOWEL BAR LAYOUT

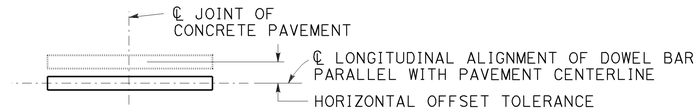

PLAN

HORIZONTAL OFFSET TOLERANCE

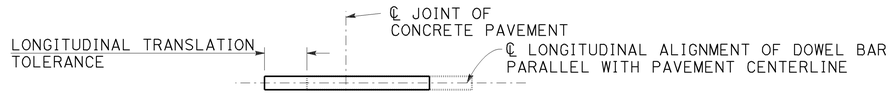

PLAN

LONGITUDINAL TRANSLATION TOLERANCE

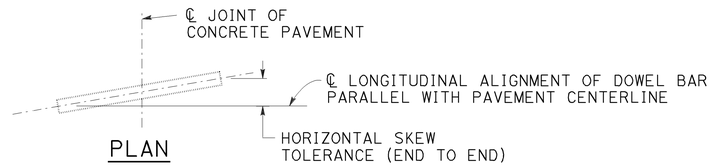

PLAN

HORIZONTAL SKEW TOLERANCE

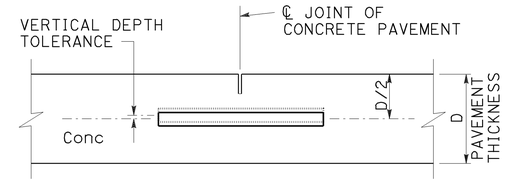

ELEVATION

VERTICAL DEPTH TOLERANCE

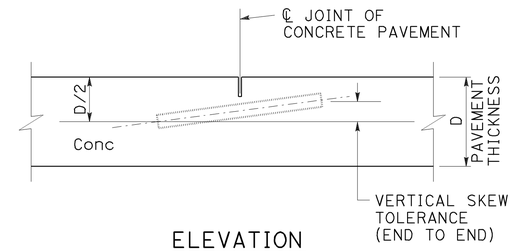

ELEVATION

VERTICAL SKEW TOLERANCE

NOTES:

1. See Revised Standard Plan RSP P1 for typical dowel bar placement and locations.
2. Where fresh concrete pavement is placed against new concrete or existing concrete pavement, rounding the corner of the existing concrete pavement is not required.
3. May also use ¾" Dia dowel bars 2'-4" ± ¼" in length. Center the length of dowel bars at the centerline of longitudinal joint.

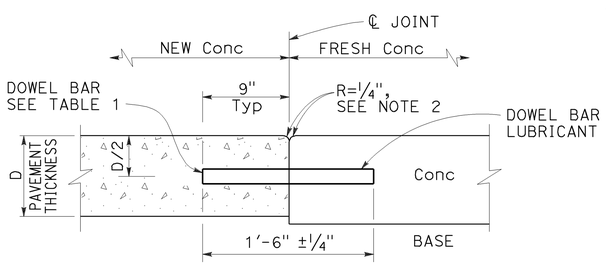

TRANSVERSE CONSTRUCTION JOINT DETAIL

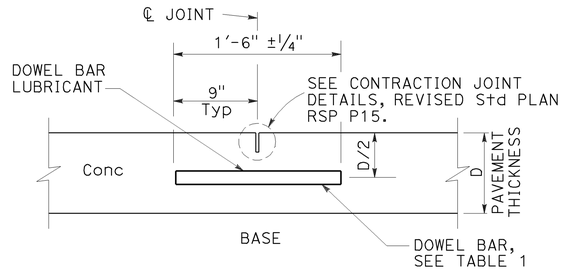

TRANSVERSE CONTRACTION JOINT

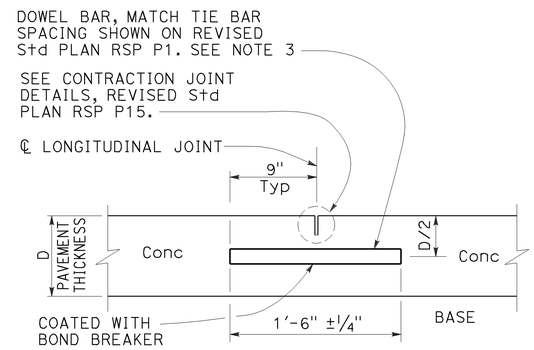

LONGITUDINAL CONTRACTION JOINT WITH DOWEL BARS

See Revised Std Plan RSP P18

TABLE 1

DOWEL BAR DIAMETER TABLE			
PAVEMENT THICKNESS	0.65'	> 0.65' - 0.85'	> 0.85'
MINIMUM DOWEL * BAR DIAMETER	1"	1¼"	1½"

* The drilled hole diameter must be ⅛" to 3/16" larger than the bar diameter.

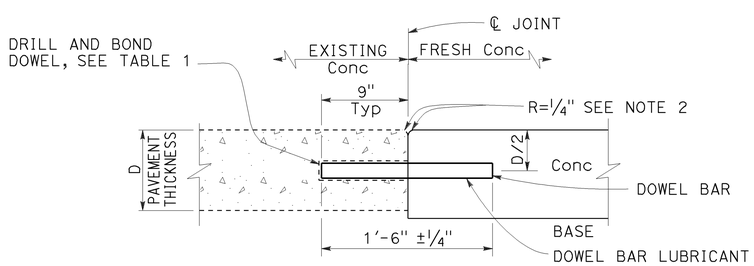

TRANSVERSE CONSTRUCTION JOINT FOR EXISTING CONCRETE PAVEMENT

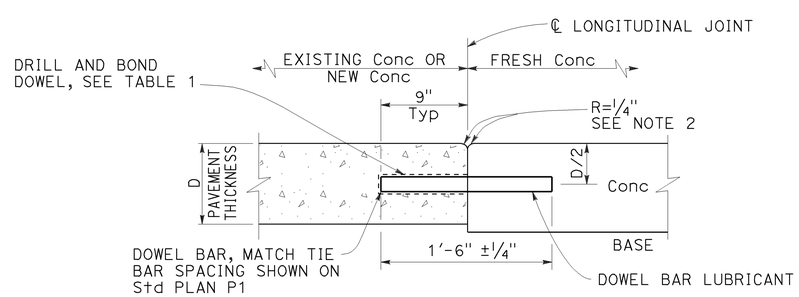

LONGITUDINAL CONSTRUCTION JOINT WITH DOWEL BARS

See Revised Std Plan RSP P18

STATE OF CALIFORNIA
DEPARTMENT OF TRANSPORTATION

CONCRETE PAVEMENT DOWEL BAR DETAILS

NO SCALE

RSP P10 DATED JULY 19, 2013 SUPERSEDES RSP P10 DATED APRIL 20, 2012 AND STANDARD PLAN P10 DATED MAY 20, 2011 - PAGE 131 OF THE STANDARD PLANS BOOK DATED 2010.

REVISED STANDARD PLAN RSP P10

2010 REVISED STANDARD PLAN RSP P10

5-31-13

Dist	COUNTY	ROUTE	POST MILES TOTAL PROJECT	SHEET No.	TOTAL SHEETS
07	LA	91	R11.3/R20.7	163	192

William K. Farnbach
REGISTERED CIVIL ENGINEER

July 19, 2013
PLANS APPROVAL DATE

REGISTERED PROFESSIONAL ENGINEER William K. Farnbach No. C49042 Exp. 9-30-14 CIVIL STATE OF CALIFORNIA

THE STATE OF CALIFORNIA OR ITS OFFICERS OR AGENTS SHALL NOT BE RESPONSIBLE FOR THE ACCURACY OR COMPLETENESS OF SCANNED COPIES OF THIS PLAN SHEET.

TO ACCOMPANY PLANS DATED 8-10-15

2010 REVISED STANDARD PLAN RSP P15

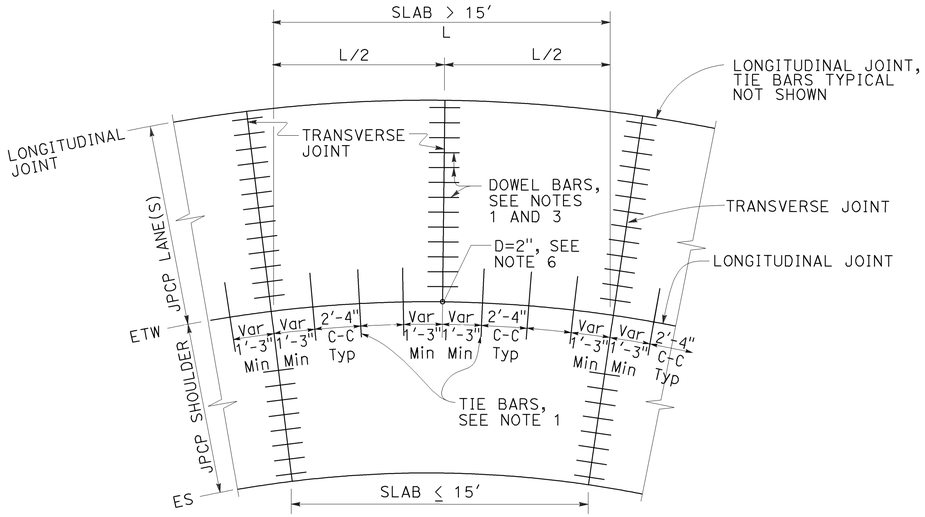

TIE BAR LAYOUT IN CURVED LANES

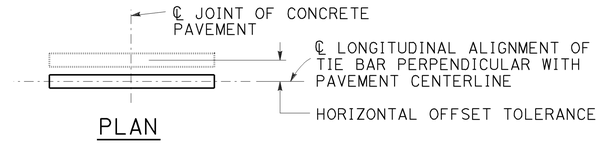

PLAN

HORIZONTAL OFFSET TOLERANCE

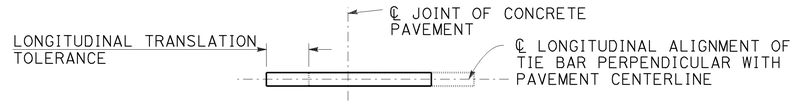

PLAN

LONGITUDINAL TRANSLATION TOLERANCE

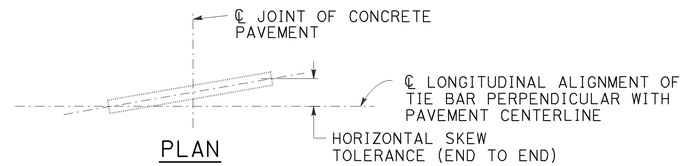

PLAN

HORIZONTAL SKEW TOLERANCE

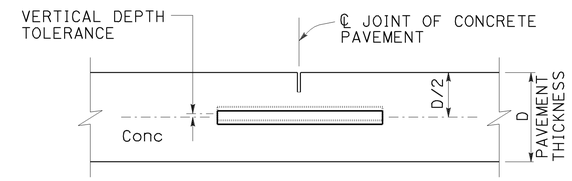

ELEVATION

VERTICAL DEPTH TOLERANCE

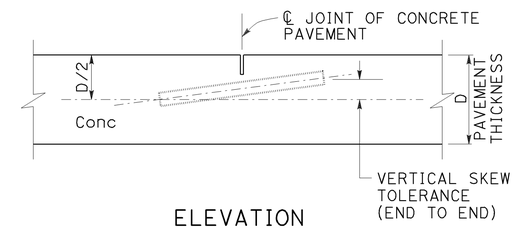

ELEVATION

VERTICAL SKEW TOLERANCE

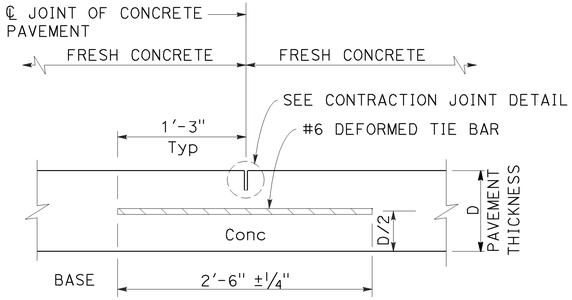

LONGITUDINAL CONTRACTION JOINT

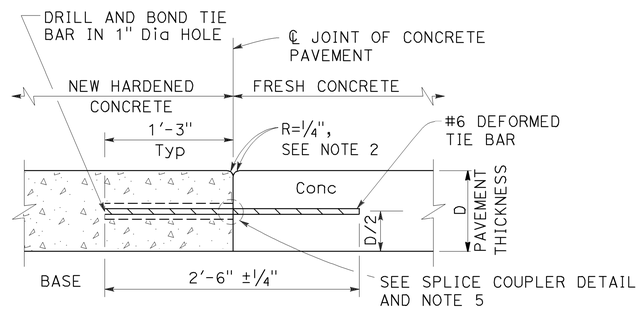

LONGITUDINAL CONSTRUCTION JOINT

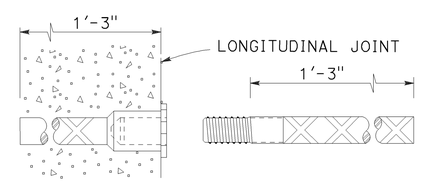

ALTERNATIVE SPLICE COUPLER

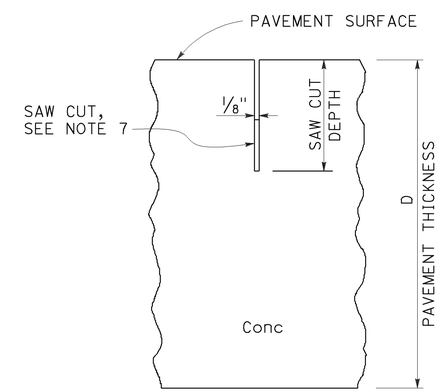

CONTRACTION JOINT DETAIL

NOTES:

1. See Revised Standard Plan RSP P1 for typical dowel bar and tie bar placement and locations.
2. Where new pavement is placed against existing concrete pavement, rounding the corner is not required.
3. For dowel bar sizes, See Revised Standard Plan RSP P10.
4. Tie bar details apply to inside widenings.
5. Use either drill and bond or splice couplers.
6. Full depth drilled hole. Fill hole with filler material.
7. The bottom of the saw cut must be at least 0.5" clear of any dowel bar, tie bar and bar reinforcement.

STATE OF CALIFORNIA
DEPARTMENT OF TRANSPORTATION

CONCRETE PAVEMENT-TIE BAR DETAILS

NO SCALE

RSP P15 DATED JULY 19, 2013 SUPPLEMENTS THE STANDARD PLANS BOOK DATED 2010.

REVISED STANDARD PLAN RSP P15

5-31-13

Dist	COUNTY	ROUTE	POST MILES TOTAL PROJECT	SHEET No.	TOTAL SHEETS
07	LA	91	R11.3/R20.7	164	192

William K. Farnbach
REGISTERED CIVIL ENGINEER

July 19, 2013
PLANS APPROVAL DATE

REGISTERED PROFESSIONAL ENGINEER William K. Farnbach No. C49042 Exp. 9-30-14 CIVIL STATE OF CALIFORNIA

THE STATE OF CALIFORNIA OR ITS OFFICERS OR AGENTS SHALL NOT BE RESPONSIBLE FOR THE ACCURACY OR COMPLETENESS OF SCANNED COPIES OF THIS PLAN SHEET.

TO ACCOMPANY PLANS DATED 8-10-15

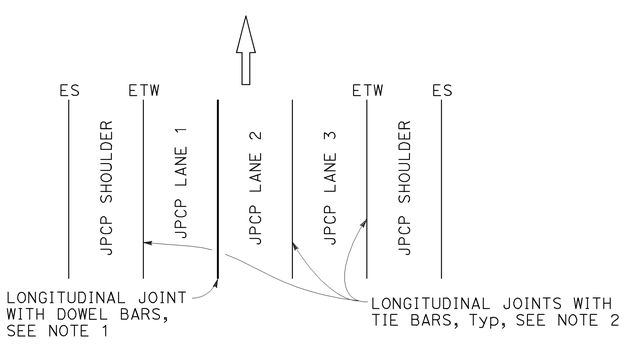

3 LANES WITH CONCRETE SHOULDERS
PLAN

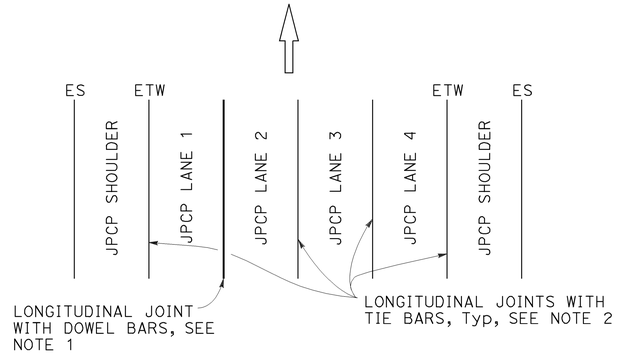

4 LANES WITH CONCRETE SHOULDERS
PLAN

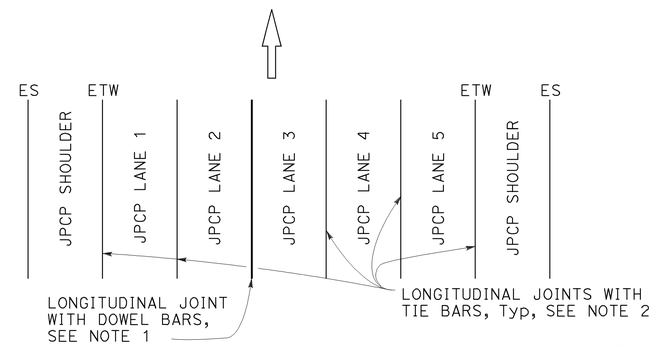

5 LANES WITH CONCRETE SHOULDERS
PLAN

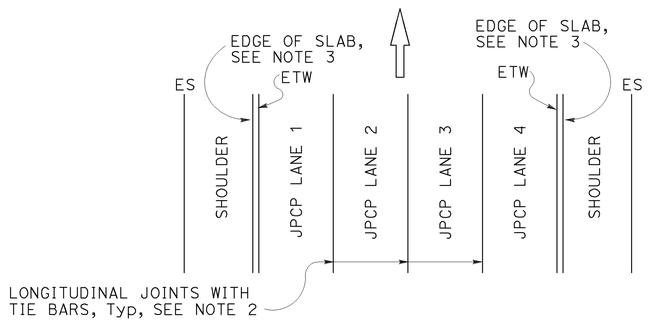

4 LANES OR LESS WITH AC SHOULDERS
PLAN

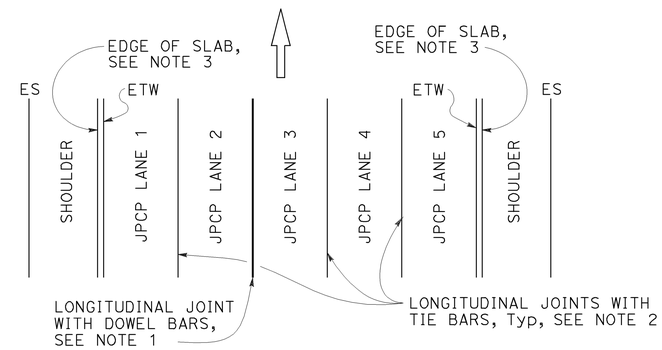

5 LANES WITH AC SHOULDERS
PLAN

NEW CONSTRUCTION

Location of Longitudinal Joints
For JPCP

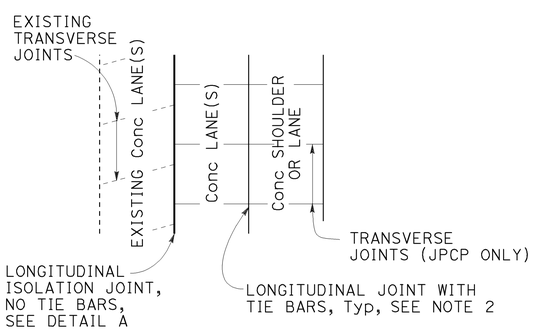

CASE 1
PLAN

Transverse Joints do not align between new and existing.

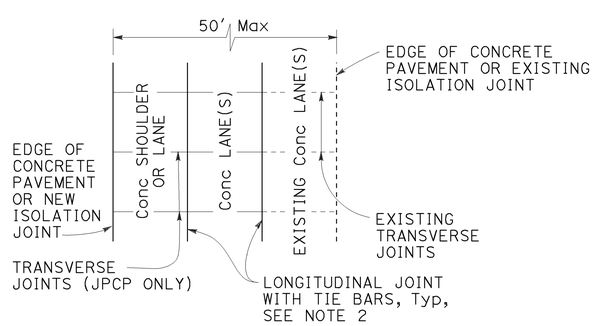

CASE 2
PLAN

Transverse Joints align between new and existing.
(For JPCP only)

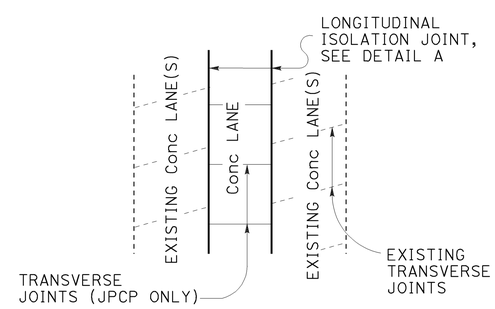

CASE 3 (INTERIOR LANE REPLACEMENT)
PLAN

Transverse Joints do not align between new and existing.

LANE/SHOULDER ADDITION OR RECONSTRUCTION

For JPCP and CRCP

NOTES:

1. See Revised Standard Plan RSP P10 for longitudinal joint with dowel bars.
2. See Revised Standard Plan RSP P15 for longitudinal joint with tie bars.
3. S= Reservoir depth.
   S= 7/8" ± 1/16" for asphalt rubber seals
   S= 9/16" ± 1/16" for silicone seals
   Preformed compression seals must be 13/16" wide and S= 1 11/16" ± 1/16"

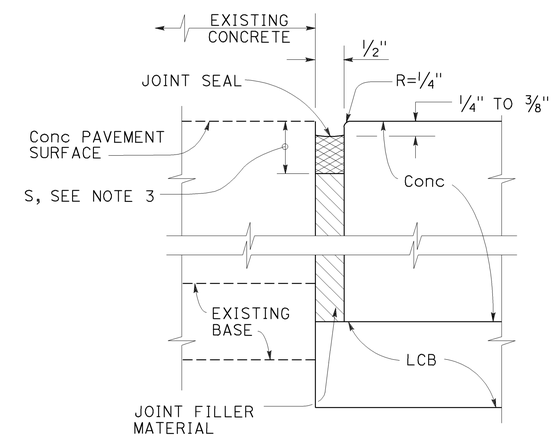

DETAIL "A"

ISOLATION JOINT

STATE OF CALIFORNIA
DEPARTMENT OF TRANSPORTATION

CONCRETE PAVEMENT LANE SCHEMATICS AND ISOLATION JOINT DETAIL

NO SCALE

RSP P18 DATED JULY 19, 2013 SUPERSEDES RSP P18 DATED APRIL 20, 2012 AND STANDARD PLAN P18 DATED MAY 20, 2011 - PAGE 135 OF THE STANDARD PLANS BOOK DATED 2010.

REVISED STANDARD PLAN RSP P18

2010 REVISED STANDARD PLAN RSP P18

5-31-13

Dist	COUNTY	ROUTE	POST MILES TOTAL PROJECT	SHEET No.	TOTAL SHEETS
07	LA	91	R11.3/R20.7	165	192

William K. Farnbach
REGISTERED CIVIL ENGINEER

July 19, 2013
PLANS APPROVAL DATE

REGISTERED PROFESSIONAL ENGINEER
William K. Farnbach
No. C49042
Exp. 9-30-14
CIVIL
STATE OF CALIFORNIA

THE STATE OF CALIFORNIA OR ITS OFFICERS OR AGENTS SHALL NOT BE RESPONSIBLE FOR THE ACCURACY OR COMPLETENESS OF SCANNED COPIES OF THIS PLAN SHEET.

TO ACCOMPANY PLANS DATED 8-10-15

2010 REVISED STANDARD PLAN RSP P20

NOTES:

1. Details do not apply to isolation joints and longitudinal construction joints.
2. Tie bars, dowel bars, and bar reinforcement are not shown.
3. Depths are measured from the final concrete pavement surface elevation after any grinding.

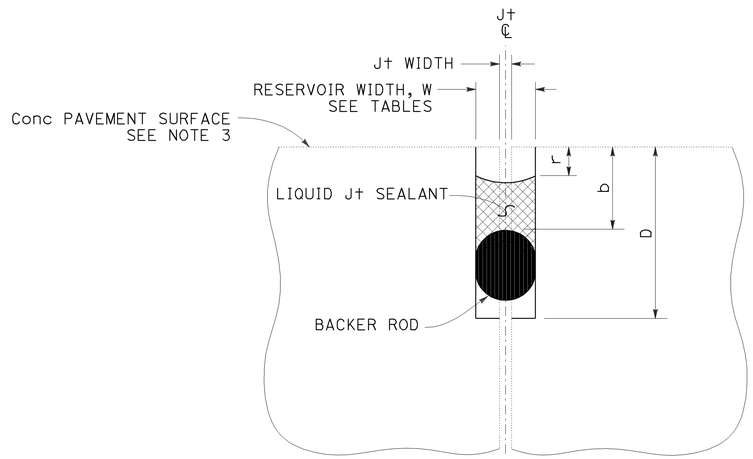

LIQUID JOINT SEALANT

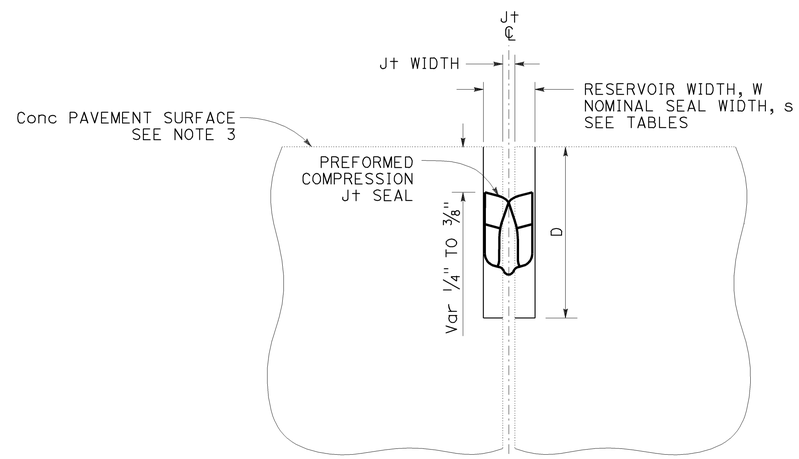

PREFORMED COMPRESSION JOINT SEAL

Const SEASON	Min RESERVOIR WIDTH * W ± 1/16"
WINTER	1/4"
SPRING	3/8"
SUMMER	3/8"
FALL	3/8"

* Minimum reservoir width for replace joint seal = existing joint width + 1/8"

RESERVOIR WIDTH W ±1/16"	LIQUID JOINT SEALANT DIMENSIONS					
	BACKER ROD NOMINAL Dia *	DEPTHS (ASPHALT RUBBER) **		DEPTHS (SILICONE)		
		RESERVOIR D ± 1/4"	BACKER ROD b ± 1/16"	RESERVOIR D ± 1/4"	BACKER ROD b ± 1/16"	RECESS r ± 1/16"
1/4"	3/8"	1 3/4"	7/8"	1 3/8"	1/2"	1/4"
3/8"	1/2"	1 7/8"	7/8"	1 1/2"	1/2"	1/4"
1/2"	3/4"	2"	7/8"	1 3/4"	9/16"	5/16"
5/8"	7/8"	2 1/4"	1"	2"	5/8"	5/16"
3/4"	1"	2 3/4"	1 1/8"	2 1/4"	3/4"	3/8"
7/8"	1 1/4"	3"	1 1/4"	2 1/2"	13/16"	3/8"
1"	1 1/2"	3 1/4"	1 3/8"	2 5/8"	7/8"	3/8"
1 1/8"	1 1/2"	3 1/2"	1 1/2"	2 13/16"	1"	1/2"

* Larger diameter backer rods may be substituted according to manufacturer recommendations if reservoir depth is increased equivalently.

** Asphalt rubber sealant recess depth "r" varies from 1/4" to 3/8"

RESERVOIR WIDTH W ±1/16"	PREFORMED COMPRESSION JOINT SEAL DIMENSIONS	
	NOMINAL SEAL WIDTH s	RESERVOIR DEPTH D ± 1/4"
1/4"	7/16"	1 1/4"
3/8"	11/16"	1 7/16"
1/2"	13/16"	1 11/16"
5/8"	1"	1 7/8"
3/4"	1 1/4"	2 1/8"
7/8"	1 5/8"	2 5/8"
1"	1 5/8"	2 5/8"
1 1/8"	2"	2 7/8"

STATE OF CALIFORNIA
DEPARTMENT OF TRANSPORTATION

JOINT SEALS

NO SCALE

RSP P20 DATED JULY 19, 2013 SUPERSEDES STANDARD PLAN P20
DATED MAY 20, 2011 - PAGE 136 OF THE STANDARD PLANS BOOK DATED 2010.

REVISED STANDARD PLAN RSP P20

Dist	COUNTY	ROUTE	POST MILES TOTAL PROJECT	SHEET No.	TOTAL SHEETS
07	LA	91	R11.3/R20.7	166	192

William K. Farnbach
REGISTERED CIVIL ENGINEER

July 19, 2013
PLANS APPROVAL DATE

REGISTERED PROFESSIONAL ENGINEER William K. Farnbach No. C49042 Exp. 9-30-14 CIVIL STATE OF CALIFORNIA

THE STATE OF CALIFORNIA OR ITS OFFICERS OR AGENTS SHALL NOT BE RESPONSIBLE FOR THE ACCURACY OR COMPLETENESS OF SCANNED COPIES OF THIS PLAN SHEET.

TO ACCOMPANY PLANS DATED 8-10-15

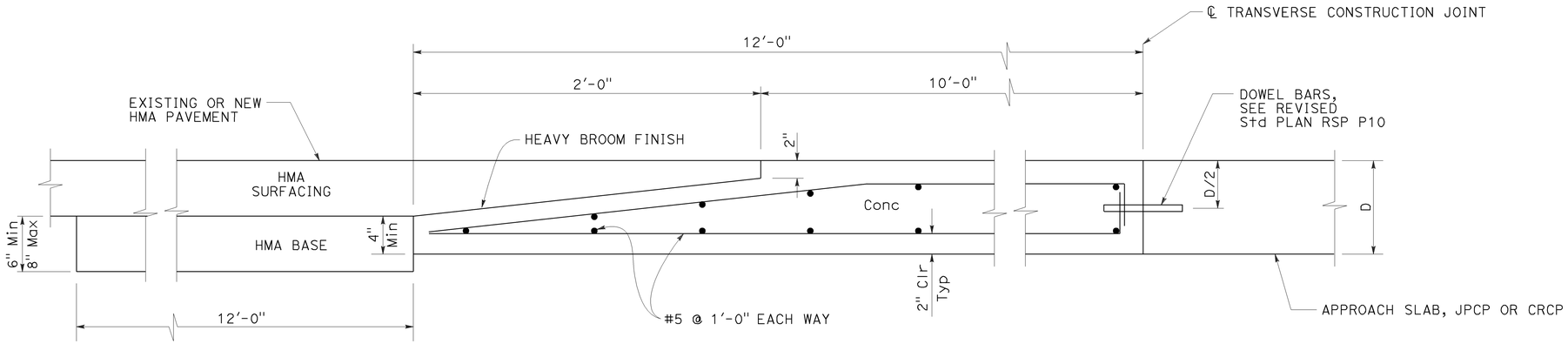

ELEVATION

CONCRETE PAVEMENT TRANSITION PANEL

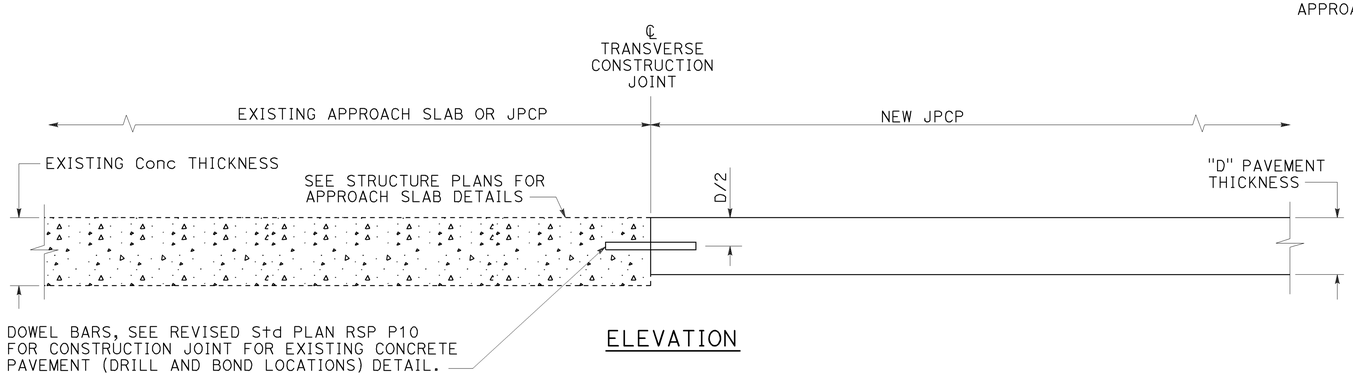

ELEVATION

TERMINAL JOINT TYPE 1

For Exist JPCP or Approach Slab

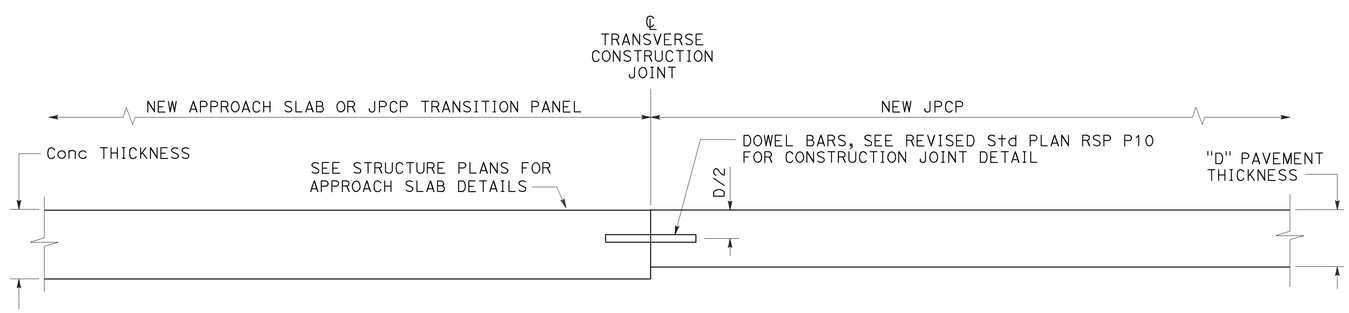

ELEVATION

TERMINAL JOINT TYPE 2

For JPCP Transition Panel or Approach Slab

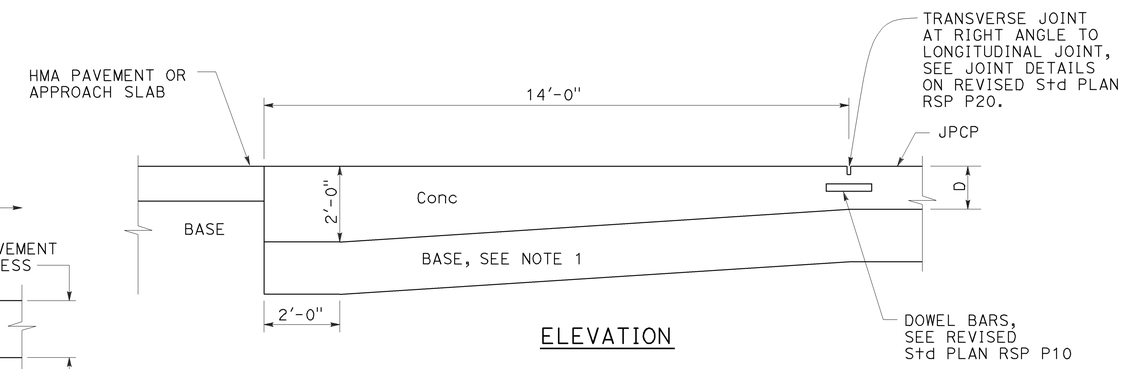

ELEVATION

PAVEMENT END ANCHOR

For HMA Pvmt or Approach Slab

NOTE:

1. Maintain same base thickness as JPCP.

STATE OF CALIFORNIA
DEPARTMENT OF TRANSPORTATION

CONCRETE PAVEMENT-END PANEL PAVEMENT TRANSITIONS

NO SCALE

RSP P30 DATED JULY 19, 2013 SUPERSEDES RSP P30 DATED APRIL 20, 2012 AND STANDARD PLAN P30 DATED MAY 20, 2011 - PAGE 137 OF THE STANDARD PLANS BOOK DATED 2010.

REVISED STANDARD PLAN RSP P30

2010 REVISED STANDARD PLAN RSP P30

3-26-13

Dist	COUNTY	ROUTE	POST MILES TOTAL PROJECT	SHEET No.	TOTAL SHEETS
07	LA	91	R11.3/R20.7	167	192

REGISTERED CIVIL ENGINEER

July 19, 2013
PLANS APPROVAL DATE

REGISTERED PROFESSIONAL ENGINEER Gurinderpal Bhullar No. C48815 Exp. 9-30-14 CIVIL STATE OF CALIFORNIA

THE STATE OF CALIFORNIA OR ITS OFFICERS OR AGENTS SHALL NOT BE RESPONSIBLE FOR THE ACCURACY OR COMPLETENESS OF SCANNED COPIES OF THIS PLAN SHEET.

TO ACCOMPANY PLANS DATED 8-10-15

2010 REVISED STANDARD PLAN RSP T9

TABLE 1

TAPER LENGTH CRITERIA AND CHANNELIZING DEVICE SPACING

SPEED (S)	MINIMUM TAPER LENGTH * FOR WIDTH OF OFFSET 12 FEET (W)				MAXIMUM CHANNELIZING DEVICE SPACING		
					X	Y	Z **
	TANGENT 2L	MERGING L	SHIFTING L/2	SHOULDER L/3	TAPER	TANGENT	CONFLICT
mph	ft	ft	ft	ft	ft	ft	ft
20	160	80	40	27	20	40	10
25	250	125	63	42	25	50	12
30	360	180	90	60	30	60	15
35	490	245	123	82	35	70	17
40	640	320	160	107	40	80	20
45	1080	540	270	180	45	90	22
50	1200	600	300	200	50	100	25
55	1320	660	330	220	55	110	27
60	1440	720	360	240	60	120	30
65	1560	780	390	260	65	130	32
70	1680	840	420	280	70	140	35

* - For other offsets, use the following merging taper length formula for L:
For speed of 40 mph or less, $L = WS^2/60$
For speed of 45 mph or more, $L = WS$

Where: L = Taper length in feet
W = Width of offset in feet
S = Posted speed limit, off-peak 85th-percentile speed prior to work starting, or the anticipated operating speed in mph

** - Use for taper and tangent sections where there are no pavement markings or where there is a conflict between existing pavement markings and channelizers (CA).

TABLE 2

LONGITUDINAL BUFFER SPACE AND FLAGGER STATION SPACING

SPEED *	Min D **	DOWNGRADE Min D ***		
		-3%	-6%	-9%
mph	ft	ft	ft	ft
20	115	116	120	126
25	155	158	165	173
30	200	205	215	227
35	250	257	271	287
40	305	315	333	354
45	360	378	400	427
50	425	446	474	507
55	495	520	553	593
60	570	598	638	686
65	645	682	728	785
70	730	771	825	891

* - Speed is posted speed limit, off-peak 85th-percentile speed prior to work starting, or the anticipated operating speed in mph

** - Longitudinal buffer space or flagger station spacing

*** - Use on sustained downgrade steeper than -3 percent and longer than 1 mile.

TABLE 3

ADVANCE WARNING SIGN SPACING

ROAD TYPE	DISTANCE BETWEEN SIGNS *		
	A	B	C
	ft	ft	ft
URBAN - 25 mph OR LESS	100	100	100
URBAN - MORE THAN 25 mph TO 40 mph	250	250	250
URBAN - MORE THAN 40 mph	350	350	350
RURAL	500	500	500
EXPRESSWAY / FREEWAY	1000	1500	2640

* - The distances are approximate, are intended for guidance purposes only, and should be applied with engineering judgment. These distances should be adjusted by the Engineer for field conditions, if necessary, by increasing or decreasing the recommmended distances.

STATE OF CALIFORNIA
DEPARTMENT OF TRANSPORTATION

TRAFFIC CONTROL SYSTEM TABLES FOR LANE AND RAMP CLOSURES

NO SCALE

RSP T9 DATED JULY 19, 2013 SUPERSEDES RSP T9 DATED APRIL 19, 2013 THAT SUPPLEMENTS THE STANDARD PLANS BOOK DATED 2010.

REVISED STANDARD PLAN RSP T9

4-30-13

TO ACCOMPANY PLANS DATED 8-10-15

Dist	COUNTY	ROUTE	POST MILES TOTAL PROJECT	SHEET No.	TOTAL SHEETS
07	LA	91	R11.3/R20.7	168	192

REGISTERED CIVIL ENGINEER

April 19, 2013
PLANS APPROVAL DATE

REGISTERED PROFESSIONAL ENGINEER Gurinderpal Bhullar No. C48815 Exp. 9-30-14 CIVIL STATE OF CALIFORNIA

THE STATE OF CALIFORNIA OR ITS OFFICERS OR AGENTS SHALL NOT BE RESPONSIBLE FOR THE ACCURACY OR COMPLETENESS OF SCANNED COPIES OF THIS PLAN SHEET.

NOTES:

See Revised Standard Plan RSP T9 for tables.

Use cone spacing X for taper segment, Y for tangent segment or Z for conflict situations, as approriate, per Table 1, unless X, Y, or Z cone spacing is shown on this sheet.

Unless otherwise specified in the special provisions, all temporary warning signs shall have black legend on fluorescent orange background.

California codes are designated by (CA). Otherwise, Federal (MUTCD) codes are shown.

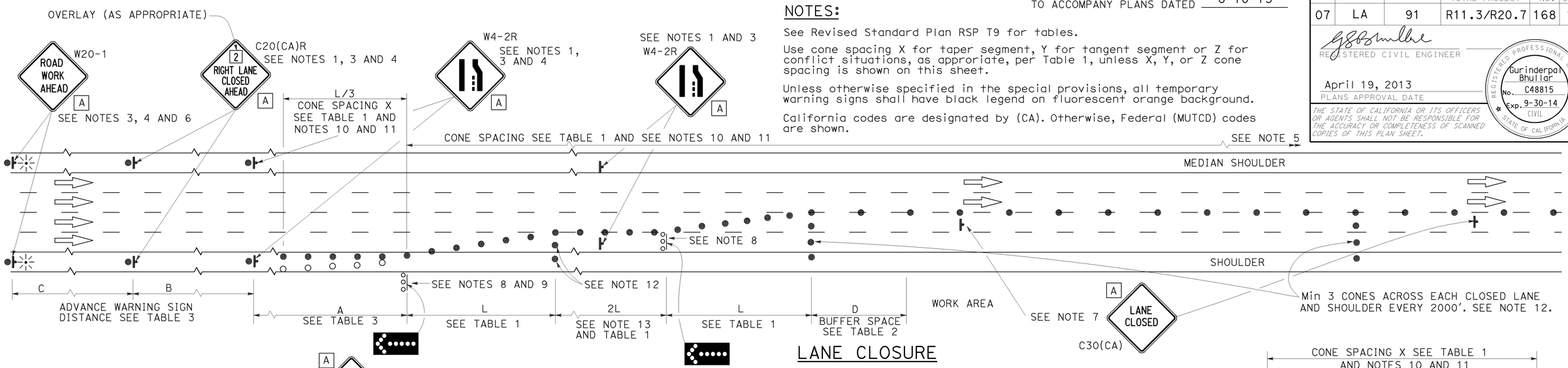

LANE CLOSURE

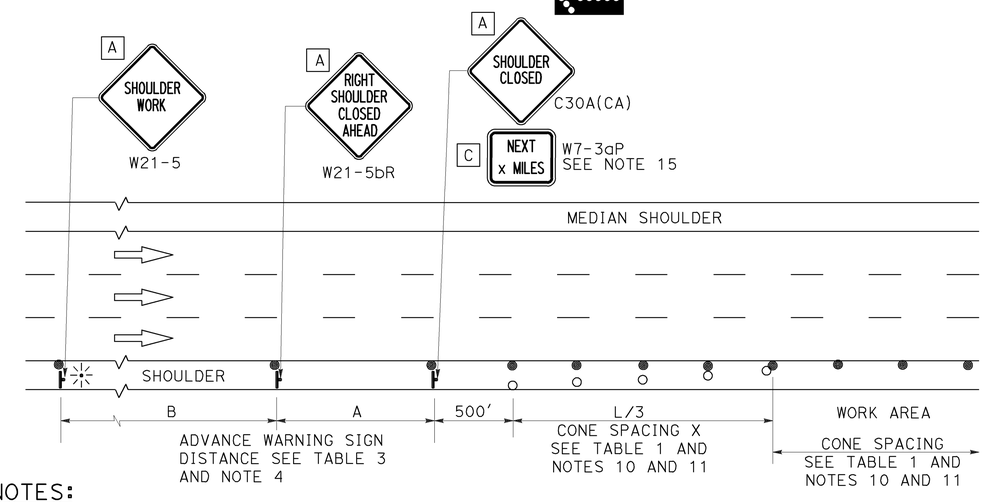

SHOULDER CLOSURE

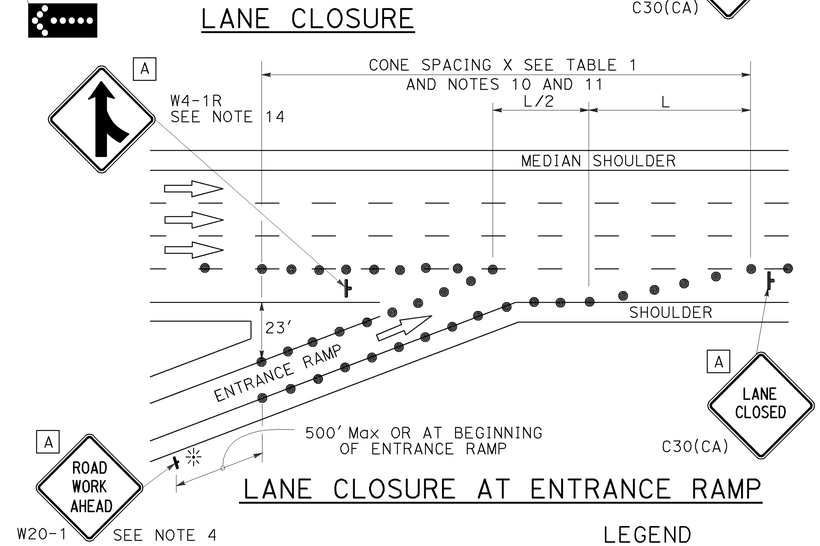

LANE CLOSURE AT ENTRANCE RAMP

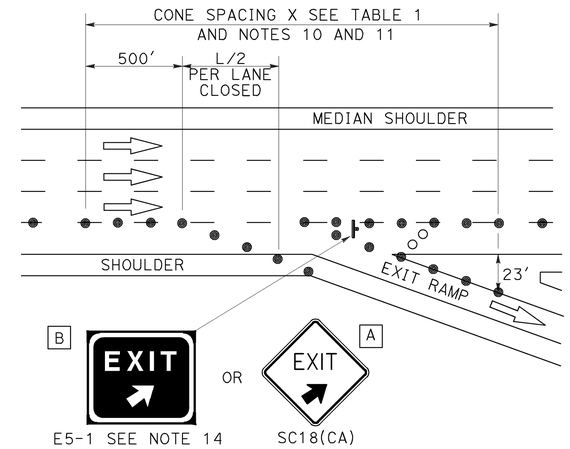

LANE CLOSURE AT EXIT RAMP

NOTES:

1. Median lane closures shall conform to the details as shown except that C20(CA)L and W4-2L signs shall be used.
2. At least one person shall be assigned to provide full time maintenance of traffic control devices for lane closures.
3. Duplicate sign installations are not required:
   a) On opposite shoulder if at least one-half of the available lanes remain open to traffic.
   b) In the median if the width of the median shoulder is less than 8' and the outside lanes are to be closed.
4. Each advance warning sign on each side of the roadway shall be equipped with at least two flags for daytime closure. Each flag shall be at least 16" x 16" in size and shall be orange or fluorescent red-orange in color. Flashing beacons shall be placed at the locations indicated for lane closure during hours of darkness.
5. A G20-2 "END ROAD WORK" sign, with minimum size of 48" x 24" as appropriate, shall be placed at the end of the lane closure unless the end of work area is obvious or ends within a larger project's limits.
6. If the W20-1 sign would follow within 2000' of a stationary W20-1 or G20-1 "ROAD WORK NEXT _____ MILES", use a C20(CA) sign for the first advance warning sign.
7. Place a C30(CA) sign every 2000' throughout length of lane closure.
8. One flashing arrow sign for each lane closed. The flashing arrow signs shall be Type I.
9. A minimum 1500' of sight distance shall be provided where possible for vehicles approaching the first flashing arrow sign. Lane closures shall not begin at top of crest vertical curve or on a horizontal curve.
10. All cones used for lane closures during the hours of darkness shall be fitted with retroreflective bands (or sleeves) as specified in the specifications.
11. Portable delineators, placed at one-half the spacing indicated for traffic cones may be used instead of cones for daytime closures only.
12. Unless otherwise specified in the special provisions, a minimum of 3 cones shall be placed transversely across each closed lane and shoulder at each location where a taper across a traffic lane ends and every 2000' as shown on the "Lane Closure" detail. Two Type II barricades may be used instead of the 3 cones. The transverse alignment of the cones or barricades on the closed shoulder may be shifted from the transverse alignment to provide access to the work.
13. Unless otherwise specified in the special provisions, the 2L tangent shown along lane lines shall be used between the L tapers required for each closed traffic lane.
14. Unless otherwise specified in the special provisions, the E5-1 or SC18(CA) and W4-1 signs shall be used as shown.
15. A W7-3aP "NEXT____ MILES" plaque must be used if theshoulder closure extends beyond the distance that can be perceived by road users.

LEGEND

- TRAFFIC CONE
- TRAFFIC CONE (OPTIONAL TAPER)
- TEMPORARY TRAFFIC CONTROL SIGN
- FLASHING ARROW SIGN (FAS)
- FAS SUPPORT OR TRAILER
- PORTABLE FLASHING BEACON

SIGN PANEL SIZE (Min)

A	48" x 48"
B	72" x 60"
C	36" x 30"

STATE OF CALIFORNIA
DEPARTMENT OF TRANSPORTATION

TRAFFIC CONTROL SYSTEM FOR LANE CLOSURE ON FREEWAYS AND EXPRESSWAYS

NO SCALE

RSP T10 DATED APRIL 19, 2013 SUPERSEDES STANDARD PLAN T10 DATED MAY 20, 2011 - PAGE 237 OF THE STANDARD PLANS BOOK DATED 2010.

REVISED STANDARD PLAN RSP T10

2010 REVISED STANDARD PLAN RSP T10

12-18-12

TO ACCOMPANY PLANS DATED 8-10-15

Dist	COUNTY	ROUTE	POST MILES TOTAL PROJECT	SHEET No.	TOTAL SHEETS
07	LA	91	R11.3/R20.7	169	192

REGISTERED CIVIL ENGINEER

April 19, 2013
PLANS APPROVAL DATE

REGISTERED PROFESSIONAL ENGINEER Gurinderpal Bhullar No. C48815 Exp. 9-30-14 CIVIL STATE OF CALIFORNIA

THE STATE OF CALIFORNIA OR ITS OFFICERS OR AGENTS SHALL NOT BE RESPONSIBLE FOR THE ACCURACY OR COMPLETENESS OF SCANNED COPIES OF THIS PLAN SHEET.

NOTES: See Revised Standard Plan RSP T9 for tables.

Use cone spacing X for taper segment, Y for tangent segment or Z for conflict situations, as approriate, per Table 1, unless X, Y, or Z cone spacing is shown on this sheet.

Unless otherwise specified in the special provisions, all temporary warning signs shall have black legend on fluorescent orange background.

California codes are designated by (CA). Otherwise, Federal (MUTCD) codes are shown.

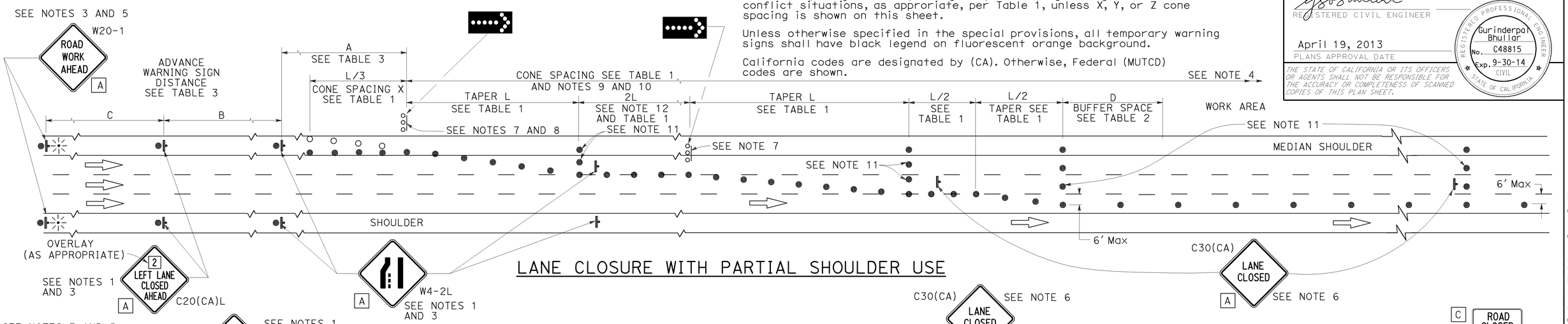

LANE CLOSURE WITH PARTIAL SHOULDER USE

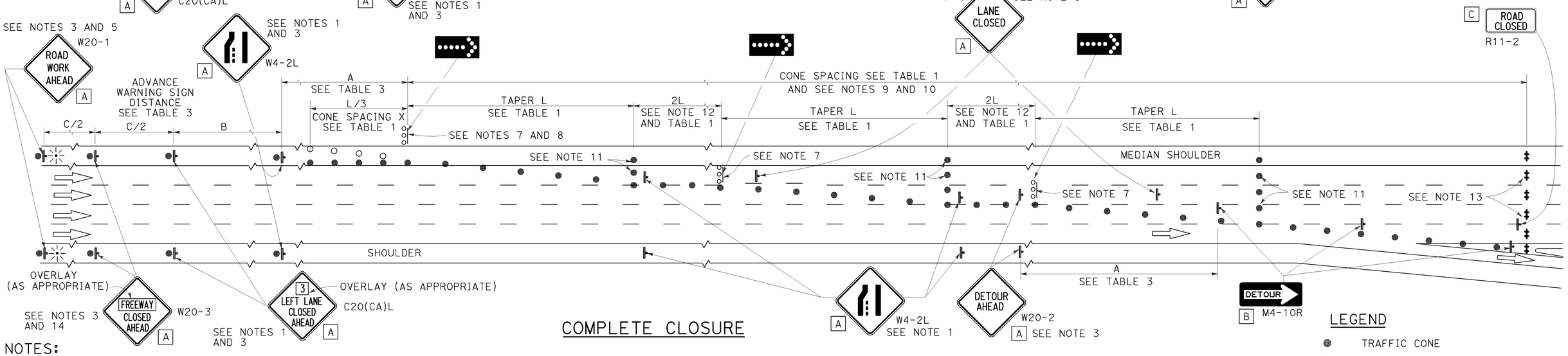

COMPLETE CLOSURE

NOTES:

1. Lane closures on the right side using partial median shoulder as a traffic lane shall conform to the details as shown except that C20(CA)R and W4-2R signs shall be used.
2. At least one person shall be assigned to provide full time maintenance of traffic control devices for lane closures.
3. Each advance warning sign on each side of the roadway shall be equipped with at least two flags for daytime closure. Each flag shall be at least 16" X 16" in size and shall be orange or fluorescent red-orange in color. Flashing beacons shall be placed at the locations indicated for lane closure during hours of darkness.
4. A G20-2 "END ROAD WORK" sign, with minimum size of 48" x 24" as appropriate, shall be placed at the end of the lane closure unless the end of work area is obvious or ends within a larger project's limits.
5. If the W20-1 sign would follow within 2000' of a stationary W20-1 or G20-1 "ROAD WORK NEXT ___ MILES", use a C20(CA) sign for the first advance warning sign.
6. Place a C30(CA) sign every 2000' throughout length of lane closure.
7. One flashing arrow sign for each lane closed. The flashing arrow signs shall be Type I.
8. A minimum 1500' of sight distance shall be provided where possible for vehicles approaching the first flashing arrow sign. Lane closures shall not begin at the top of crest vertical curve or on a horizontal curve.
9. All cones used for lane closures during the hours of darkness shall be fitted with retroreflective bands (or sleeves) as specified in the specifications.
10. Portable delineators, placed at one-half the spacing indicated for traffic cones, may be used instead of cones for daytime closures only.
11. Unless otherwise specified in the special provisions, a minimum of 3 cones shall be placed transversely across each closed lane and shoulder at each location where a taper across a traffic lane ends and every 2000' as shown on the "Lane Closure With Partial Shoulder Use" detail. Two Type II barricades may be used instead of the 3 cones. The transverse alignment of the cones or barricades on the closed shoulder may be shifted from the transverse alignment to provide access to the work.
12. Unless otherwise specified in the special provisions, the 2L tangent shown along lane lines shall be used between the L tapers required for each closed traffic lane.
13. A minimum of Two Type II or III barricades shall be placed across each closed lane and shoulder at the location shown and every 2000' within the complete closure area. Within the complete closure area, the transverse alignment of the barricades on the closed shoulder may be shifted from the transverse alignment to provide access to the work.
14. When specified in the special provisions, a W20-2 "DETOUR AHEAD" sign is to be used in place of the W20-3 "FREEWAY CLOSED AHEAD" sign.

SIGN PANEL SIZE (Min)

A	48" x 48"
B	48" x 18"
C	48" x 30"

LEGEND

- TRAFFIC CONE
- TRAFFIC CONE (OPTIONAL TAPER)
- TEMPORARY TRAFFIC CONTROL SIGN
- FLASHING ARROW SIGN (FAS)
- FAS SUPPORT OR TRAILER
- PORTABLE FLASHING BEACON

STATE OF CALIFORNIA
DEPARTMENT OF TRANSPORTATION

TRAFFIC CONTROL SYSTEM FOR LANE CLOSURES ON FREEWAYS AND EXPRESSWAYS

NO SCALE

RSP T10A DATED APRIL 19, 2013 SUPERSEDES STANDARD PLAN T10A DATED MAY 20, 2011 - PAGE 238 OF THE STANDARD PLANS BOOK DATED 2010.

REVISED STANDARD PLAN RSP T10A

2010 REVISED STANDARD PLAN RSP T10A

12-18-12

Dist	COUNTY	ROUTE	POST MILES TOTAL PROJECT	SHEET No.	TOTAL SHEETS
07	LA	91	R11.3/R20.7	170	192

REGISTERED CIVIL ENGINEER

April 19, 2013
PLANS APPROVAL DATE

REGISTERED PROFESSIONAL ENGINEER
Gurinderpal Bhullar
No. C48815
Exp. 9-30-14
CIVIL
STATE OF CALIFORNIA

THE STATE OF CALIFORNIA OR ITS OFFICERS OR AGENTS SHALL NOT BE RESPONSIBLE FOR THE ACCURACY OR COMPLETENESS OF SCANNED COPIES OF THIS PLAN SHEET.

TO ACCOMPANY PLANS DATED 8-10-15

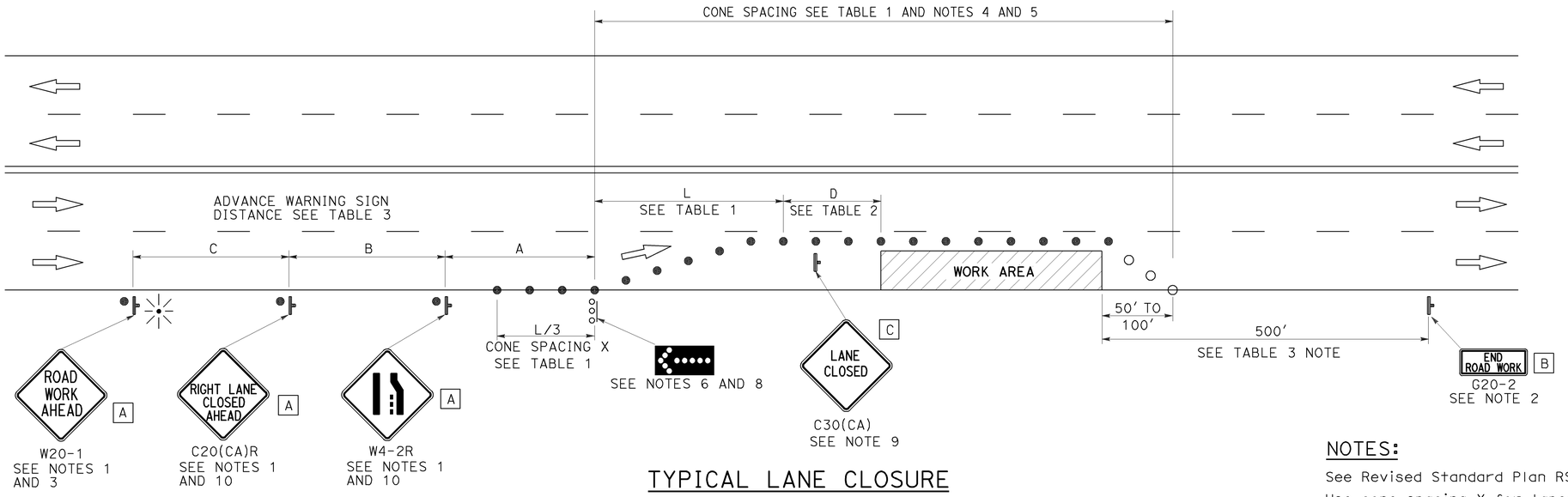

TYPICAL LANE CLOSURE

NOTES:

See Revised Standard Plan RSP T9 for tables.

Use cone spacing X for taper segment, Y for tangent segment or Z for conflict situations, as approriate, per Table 1, unless X, Y, or Z cone spacing is shown on this sheet.

Unless otherwise specified in the special provisions, all temporary warning signs shall have black legend on fluorescent orange background.

California codes are designated by (CA). Otherwise, Federal (MUTCD) codes are shown.

LEGEND

- ● TRAFFIC CONE
- ○ TRAFFIC CONE (OPTIONAL TAPER)
- TEMPORARY TRAFFIC CONTROL SIGN
- FLASHING ARROW SIGN (FAS)
- FAS SUPPORT OR TRAILER
- PORTABLE FLASHING BEACON

SIGN PANEL SIZE (Min)

A	48" x 48"
B	36" x 18"
C	30" x 30"

NOTES:

1. Each advance warning sign shall be equipped with at least two flags for daytime closure. Each flag shall be at least 16" x 16" in size and shall be orange or fluorescent red-orange in color. Flashing beacons shall be placed at the locations indicated for lane closure during hours of darkness.
2. A G20-2 "END ROAD WORK" sign, as appropriate, shall be placed at the end of the lane closure unless the end of work area is obvious, or ends within a larger project's limits.
3. If the W20-1 sign would follow within 2000' of a stationary W20-1 or G20-1 "ROAD WORK NEXT _____ MILES", use a C20(CA) sign for the first advance warning sign.
4. All cones used for lane closures during the hours of darkness shall be fitted with retroreflective bands (or sleeves) as specified in the specifications.
5. Portable delineators, placed at one-half the spacing indicated for traffic cones, may be used instead of cones for daytime closures only.
6. Flashing arrow sign shall be either Type I or Type II.
7. For approach speeds over 50 mph, use the "Traffic Control System for Lane Closure On Freeways And Expressways" plan for lane closure details and requirements.
8. A minimum 1500' of sight distance shall be provided where possible for vehicles approaching the first flashing arrow sign. Lane closures shall not begin at the top of crest vertical curve or on a horizontal curve.
9. Place a C30(CA) sign every 2000' throughout length of lane closure.
10. Median lane closures shall conform to the details as shown except that C20(CA)L and W4-2L signs shall be used.
11. At least one person shall be assigned to provide full time maintenance of traffic control devices for lane closure unless, otherwise directed by the Engineer.

STATE OF CALIFORNIA
DEPARTMENT OF TRANSPORTATION

TRAFFIC CONTROL SYSTEM FOR LANE CLOSURE ON MULTILANE CONVENTIONAL HIGHWAYS

NO SCALE

RSP T11 DATED APRIL 19, 2013 SUPERSEDES STANDARD PLAN T11 DATED MAY 20, 2011 - PAGE 239 OF THE STANDARD PLANS BOOK DATED 2010.

REVISED STANDARD PLAN RSP T11

2010 REVISED STANDARD PLAN RSP T11

Dist	COUNTY	ROUTE	POST MILES TOTAL PROJECT	SHEET No.	TOTAL SHEETS
07	LA	91	R11.3/R20.7	171	192

REGISTERED CIVIL ENGINEER

April 19, 2013
PLANS APPROVAL DATE

REGISTERED PROFESSIONAL ENGINEER Gurinderpal Bhullar No. C48815 Exp. 9-30-14 CIVIL STATE OF CALIFORNIA

THE STATE OF CALIFORNIA OR ITS OFFICERS OR AGENTS SHALL NOT BE RESPONSIBLE FOR THE ACCURACY OR COMPLETENESS OF SCANNED COPIES OF THIS PLAN SHEET.

TO ACCOMPANY PLANS DATED 8-10-15

TYPICAL RAMP CLOSURES

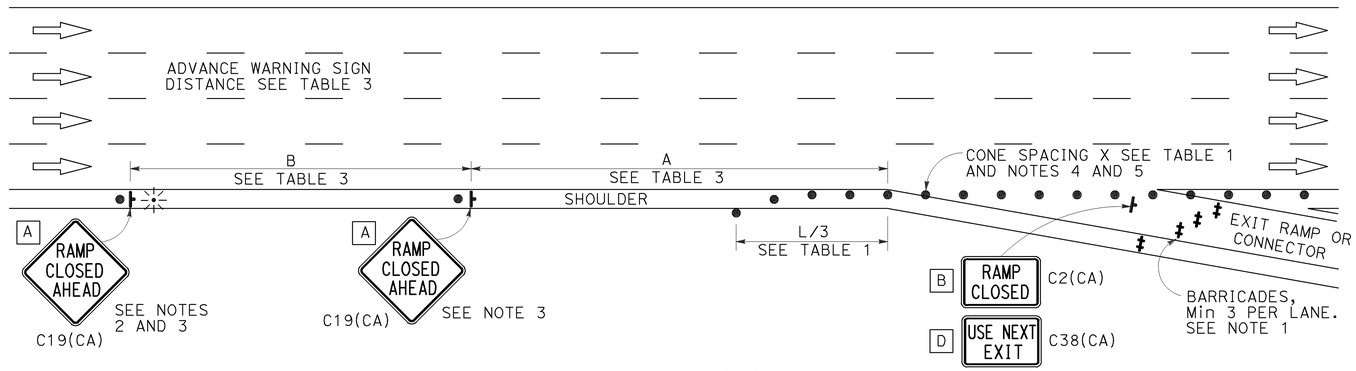

EXIT RAMP OR CONNECTOR

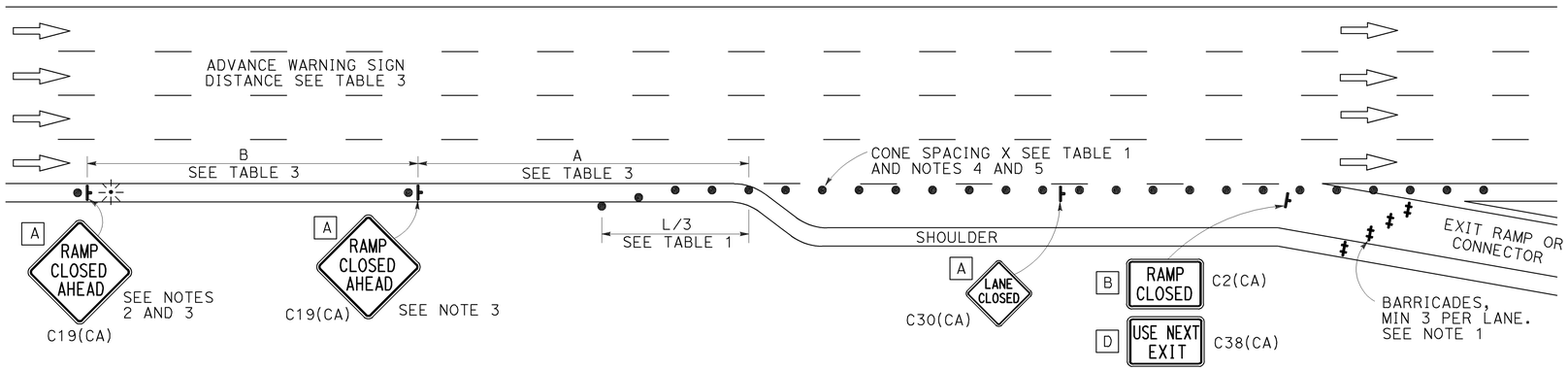

EXIT RAMP OR CONNECTOR WITH ADDITIONAL LANE

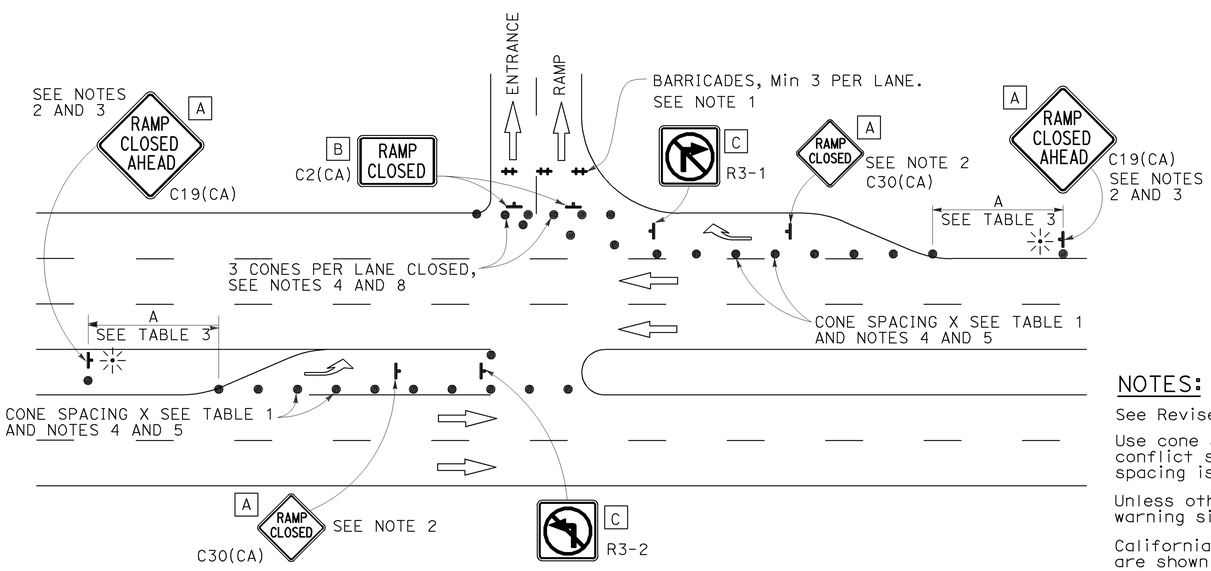

ENTRANCE RAMP WITH TURNING POCKETS

SIGN PANEL SIZE (Min)

- A 48" × 48"
- B 48" × 30"
- C 36" × 36"
- D 48" × 36"

LEGEND

- TRAFFIC CONE
- TEMPORARY TRAFFIC CONTROL SIGN
- BARRICADES
- PORTABLE FLASHING BEACON

NOTES:

1. Barricades shall be Type I, II, or III for closures lasting one week or less and Type III for closures lasting longer than one week.
2. In addition to placing the C19(CA) "RAMP CLOSED AHEAD" and C30(CA) "RAMP CLOSED" signs, black on orange overlay plates with the word "CLOSED" may be mounted, as directed by the Engineer, on all guide signs that refer to the closed ramp. The letter size on the overlay shall be the same as the guide sign.
3. Each advance C19(CA) "RAMP CLOSED AHEAD" sign shall be equipped with at least two flags for daytime closure. Each flag shall be at least 16" × 16" in size and shall be orange or fluorescent red-orange in color. A flashing beacon shall be placed on top of the first C19(CA) sign during hours of darkness.
4. All cones used for ramp closures during the hours of darkness shall be fitted with retroreflective bands (or sleeves) as specified in the specifications.
5. Portable delineators, placed at one-half the spacing indicated for traffic cones, may be used instead of cones for daytime ramp closures only.
6. At least one person shall be assigned to provide full time maintenance of traffic control devices, unless otherwise directed by the Engineer.
7. The existing "EXIT" signs shall be covered during ramp closures.
8. A minimum of 3 cones shall be placed transversely across each closed lane and shoulder.

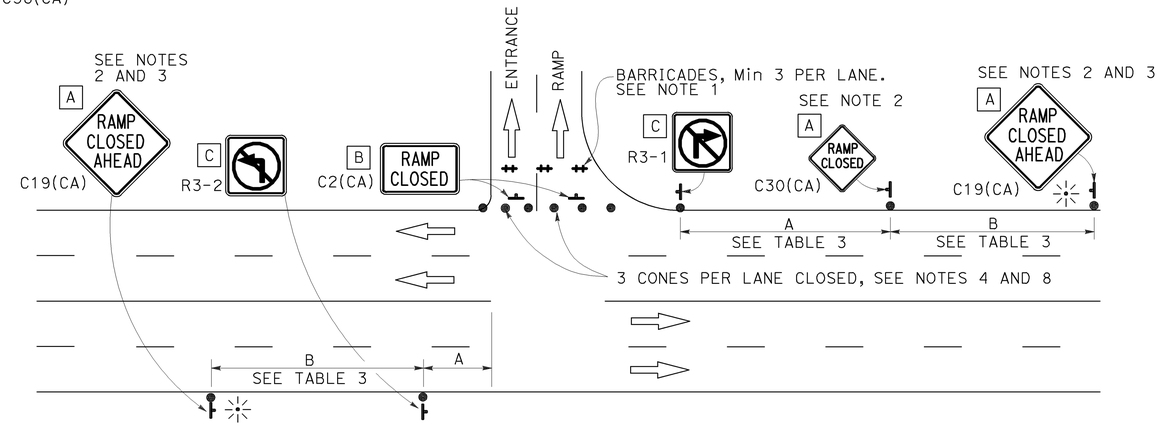

ENTRANCE RAMP WITHOUT TURNING POCKETS

NOTES:

See Revised Standard Plan RSP T9 for tables.

Use cone spacing X for taper segment, Y for tangent segment or Z for conflict situations, as approriate, per Table 1, unless X, Y, or Z cone spacing is shown on this sheet.

Unless otherwise specified in the special provisions, all temporary warning signs shall have black legend on fluorescent orange background.

California codes are designated by (CA). Otherwise, Federal (MUTCD) codes are shown.

STATE OF CALIFORNIA
DEPARTMENT OF TRANSPORTATION

TRAFFIC CONTROL SYSTEM FOR RAMP CLOSURE

NO SCALE

RSP T14 DATED APRIL 19, 2013 SUPERSEDES STANDARD PLAN T14
DATED MAY 20, 2011 - PAGE 242 OF THE STANDARD PLANS BOOK DATED 2010.

REVISED STANDARD PLAN RSP T14

2010 REVISED STANDARD PLAN RSP T14

12-18-12

Dist	COUNTY	ROUTE	POST MILES TOTAL PROJECT	SHEET No.	TOTAL SHEETS
07	LA	91	R11.3/R20.7	172	192

Theresa Gabriel
REGISTERED ELECTRICAL ENGINEER

July 19, 2013
PLANS APPROVAL DATE

REGISTERED PROFESSIONAL ENGINEER Theresa Aziz Gabriel No. E15129 Exp. 6-30-14 ELECTRICAL STATE OF CALIFORNIA

THE STATE OF CALIFORNIA OR ITS OFFICERS OR AGENTS SHALL NOT BE RESPONSIBLE FOR THE ACCURACY OR COMPLETENESS OF SCANNED COPIES OF THIS PLAN SHEET.

TO ACCOMPANY PLANS DATED 8-10-15

LEGEND:

AB	ABANDON. IF APPLIED TO CONDUIT, REMOVE CONDUCTORS
BC	INSTALL PULL BOX IN EXISTING CONDUIT RUN
BP	PEDESTRIAN BARRICADE, TYPE AS INDICATED ON PLAN
CB	INSTALL CONDUIT INTO EXISTING PULL BOX
CC	CONNECT NEW AND EXISTING CONDUIT. REMOVE EXISTING CONDUCTORS AND INSTALL CONDUCTORS AS INDICATED
CF	CONDUIT TO REMAIN FOR FUTURE USE. REMOVE CONDUCTORS. INSTALL PULL TAPE
DH	DETECTOR HANDHOLE
FA	FOUNDATION TO BE ABANDONED
IS	INSTALL SIGN ON SIGNAL MAST ARM
NS	NO SLIP BASE ON STANDARD
PEC	PHOTOELECTRIC CONTROL
PEU	PHOTOELECTRIC UNIT
RC	EQUIPMENT OR MATERIAL TO BE REMOVED AND BECOME THE PROPERTY OF THE CONTRACTOR
RE	REMOVE ELECTROLIER, FUSES AND BALLAST. TAPE ENDS OF CONDUCTORS
RL	RELOCATE EQUIPMENT
RR	REMOVE AND REUSE EQUIPMENT
RS	REMOVE AND SALVAGE EQUIPMENT
SC	SPLICE NEW TO EXISTING CONDUCTORS
SD	SERVICE DISCONNECT
TSP	TELEPHONE SERVICE POINT

ABBREVIATIONS

APS	ACCESSIBLE PEDESTRIAN SIGNAL
BBS	BATTERY BACKUP SYSTEM
BC	BOLT CIRCLE
BPB	BICYCLE PUSH BUTTON
C	CONDUIT
CB	CIRCUIT BREAKER
CCTV	CLOSED CIRCUIT TELEVISION
Ckt	CIRCUIT
CMS	CHANGEABLE MESSAGE SIGN
Ctid	CALTRANS IDENTIFICATION
Comm	COMMUNICATION
DLC	LOOP DETECTOR LEAD-IN CABLE
EMS	EXTINGUISHABLE MESSAGE SIGN
EVUC	EMERGENCY VEHICLE UNIT CABLE
EVUD	EMERGENCY VEHICLE UNIT DETECTOR
FB	FLASHING BEACON
FBCA	FLASHING BEACON CONTROL ASSEMBLY
FBS	FLASHING BEACON WITH SLIP BASE
FO	FIBER OPTIC
G	EQUIPMENT GROUNDING CONDUCTOR
GB	GROUND BUS
GFCI	GROUND FAULT CIRCUIT INTERRUPTER
HAR	HIGHWAY ADVISORY RADIO
Hex	HEXAGONAL
HPS	HIGH PRESSURE SODIUM
IISNS	INTERNALLY ILLUMINATED STREET NAME SIGN
ISL	INDUCTION SIGN LIGHTING
LED	LIGHT EMITTING DIODE
LMA	LUMINAIRE MAST ARM
LPS	LOW PRESSURE SODIUM
Ltg	LIGHTING
Lum	LUMINAIRE
M	METERED
MAT	MAST ARM MOUNTING TOP ATTACHMENT
MAS	MAST ARM MOUNTING SIDE ATTACHMENT
M/M	MULTIPLE TO MULTIPLE TRANSFORMER
Mtg	MOUNTING
MV	MERCURY VAPOR LIGHTING FIXTURE
MVDS	MICROWAVE VEHICLE DETECTION SYSTEM
N	NEUTRAL (GROUNDED CONDUCTOR)
NB	NEUTRAL BUS
NC	NORMALLY CLOSE
NO	NORMALLY OPEN
P	CIRCUIT BREAKER'S POLE
PB	PULL BOX
PBA	PUSH BUTTON ASSEMBLY
PEC	PHOTOELECTRIC CONTROL
Ped	PEDESTRIAN
PEU	PHOTOELECTRIC UNIT
PT	CONDUIT WITH PULL TAPE
RE	RELOCATED EQUIPMENT
RM	RAMP METERING
RWIS	ROADSIDE WEATHER INFORMATION SYSTEM
SB	SLIP BASE
SIC	SIGNAL INTERCONNECT CABLE
Sig	SIGNAL
SMA	SIGNAL MAST ARM
SNS	STREET NAME SIGN
SP	SERVICE POINT
TDC	TELEPHONE DEMARCATION CABINET
TMS	TRAFFIC MONITORING STATION
TOS	TRAFFIC OPERATIONS SYSTEM
Veh	VEHICLE
VIVDS	VIDEO IMAGE VEHICLE DETECTION SYSTEM
WIM	WEIGH-IN-MOTION
Xfmr	TRANSFORMER

SOFFIT AND WALL MOUNTED LUMINAIRES

- PENDANT, 70 W HPS UNLESS OTHERWISE SPECIFIED
- FLUSH, 70 W HPS UNLESS OTHERWISE SPECIFIED
- WALL SURFACE, 70 W HPS UNLESS OTHERWISE SPECIFIED
- EXISTING SOFFIT OR WALL LUMINAIRE TO REMAIN UNMODIFIED
- EXISTING SOFFIT OR WALL LUMINAIRE TO BE MODIFIED AS SPECIFIED

NOTE:
Arrow indicates "street side" of luminaire.

COMMONLY USED SYMBOLS FOR UNITED STATES CUSTOMARY UNITS OF MEASUREMENT:

SYMBOL USED	DEFINITIONS
Ω	OHMS
min	MINUTE
s	SECOND
bps	BITS PER SECOND
Bps	BYTES PER SECOND
A	AMPERE
V	VOLT
V(dc)	VOLT (DIRECT CURRENT)
V(ac)	VOLT (ALTERNATING CURRENT)
FC	FOOT - CANDLE
W	WATTS
VA	VOLT-AMPERE
M	MEGA
k	KILO
m	MILLI
μ	MICRO
P	PICO
Hz	HERTZ

MISCELLANEOUS ELECTROLIERS

NEW	EXISTING	
		LUMINAIRE ON WOOD POLE
		NON-STANDARD ELECTROLIER (SEE PROJECT NOTES OR PROJECT PLANS)
		CITY ELECTROLIER
		ELECTROLIER FOUNDATION (FUTURE INSTALLATION)

NOTES:

1. HPS luminaires shall be 310 W HPS when installed on Type 21, 21D, 30, 31 and 32 Standards, unless otherwise specified. HPS luminaires shall be 200 W when installed on other type standards or poles, unless otherwise specified.
2. LED luminaires shall be 235 W when installed on Type 21, 21D, 30, 31 and 32 Standards, unless otherwise specified. LED luminaires shall be 165 W when installed on other type standards or poles, unless otherwise specified.
3. Luminaires shall be the cutoff type, ANSI Type III medium cutoff lighting distribution, unless otherwise specified.

STANDARD ELECTROLIER

NEW	EXISTING	STANDARD TYPE
		15
		15D
		15 STRUCTURE
		15D STRUCTURE
		21
		21D
		21 STRUCTURE
		21D STRUCTURE
		30
		31
		32

STATE OF CALIFORNIA
DEPARTMENT OF TRANSPORTATION

ELECTRICAL SYSTEMS (LEGEND AND ABBREVIATIONS)

NO SCALE

RSP ES-1A DATED JULY 19, 2013 SUPERSEDES STANDARD PLAN ES-1A DATED MAY 20, 2011 - PAGE 425 OF THE STANDARD PLANS BOOK DATED 2010.

REVISED STANDARD PLAN RSP ES-1A

2010 REVISED STANDARD PLAN RSP ES-1A

Dist	COUNTY	ROUTE	POST MILES TOTAL PROJECT	SHEET No.	TOTAL SHEETS
07	LA	91	R11.3/R20.7	173	192

Theresa Gabriel
REGISTERED ELECTRICAL ENGINEER

July 19, 2013
PLANS APPROVAL DATE

REGISTERED PROFESSIONAL ENGINEER
Theresa Aziz Gabriel
No. E15129
Exp. 6-30-14
ELECTRICAL
STATE OF CALIFORNIA

THE STATE OF CALIFORNIA OR ITS OFFICERS OR AGENTS SHALL NOT BE RESPONSIBLE FOR THE ACCURACY OR COMPLETENESS OF SCANNED COPIES OF THIS PLAN SHEET.

TO ACCOMPANY PLANS DATED 8-10-15

CONDUIT

NEW	EXISTING	
		LIGHTING CONDUIT, UNLESS OTHERWISE INDICATED OR NOTED
		TRAFFIC SIGNAL CONDUIT
C	c	COMMUNICATION CONDUIT
T	t	TELEPHONE CONDUIT
F	f	FIRE ALARM CONDUIT
FO	fo	FIBER OPTIC CONDUIT
		CONDUIT TERMINATION
R	r	CONDUIT RISER ATTACHED TO THE STRUCTURE OR SERVICE POLE

SERVICE EQUIPMENT

NEW	EXISTING	
OH	oh	OVERHEAD LINES
U	U	WOOD POLE, "U" INDICATES UTILITY OWNED
		POLE GUY WITH ANCHOR
		UTILITY TRANSFORMER - GROUND MOUNTED
III	III	SERVICE EQUIPMENT ENCLOSURE TYPE. DOOR INDICATES FRONT OF ENCLOSURE
T	t	TELEPHONE DEMARCATION CABINET

POLE-MOUNTED SERVICE DESIGNATION

TYPE H SERVICE, 28'-10" — TYPE OF INSTALLATION AND POLE HEIGHT ABOVE GRADE

FLASHING BEACON

NEW	EXISTING	
R	R	FLASHING BEACON (ONE VEHICLE SIGNAL HEAD WITH BACKPLATE AND VISOR) "R" INDICATES RED INDICATION, "Y" INDICATES YELLOW INDICATION
Y Y	Y Y	FLASHING BEACON WITH TYPE 15-FBS STANDARD AND A SIGN.
R R	R R	FLASHING BEACON WITH TYPES 9, 9A OR 9B SIGN UNLESS OTHERWISE SPECIFIED OR INDICATED

SIGNAL EQUIPMENT

NEW	EXISTING	
C	C	PEDESTRIAN SIGNAL HEAD "C" INDICATES COUNTDOWN PEDESTRIAN HEAD
		PUSH BUTTON ASSEMBLY POST
		PEDESTRIAN BARRICADE
		VEHICLE SIGNAL HEAD (WITH BACKPLATE AND 3-SECTIONS: RED, YELLOW AND GREEN)
		VEHICLE SIGNAL HEAD WITH ANGLE VISOR
PV	PV	MODIFICATIONS OF BASIC SYMBOL: "L" INDICATES ALL NON-ARROW SECTIONS LOUVERED "LG" INDICATES LOUVERED GREEN SECTION ONLY "PV" INDICATES ALL 12" SECTIONS PROGRAMMED VISIBILITY "8" INDICATES ALL 8" SECTIONS (ONLY WHEN SPECIFIED)
		VEHICLE SIGNAL HEAD CONSISTING OF RED, YELLOW AND GREEN LEFT ARROW SECTIONS
		VEHICLE SIGNAL HEAD CONSISTING OF RED AND YELLOW SECTIONS WITH AN UP GREEN ARROW SECTION
		VEHICLE SIGNAL HEAD (5 SECTION) CONSISTING OF RED, YELLOW AND GREEN SECTIONS WITH YELLOW AND GREEN RIGHT ARROW SECTIONS
		TYPE 15TS STANDARD WITH VEHICLE SIGNAL HEAD AND LUMINAIRE
		TYPE 21TS STANDARD WITH VEHICLE SIGNAL HEAD AND LUMINAIRE
		STANDARD WITH LUMINAIRE AND SIGNAL MAST ARMS AND ATTACHED VEHICLE SIGNAL HEADS
		TYPE 1 STANDARD WITH ATTACHED VEHICLE SIGNAL HEADS
		STANDARD WITH A SIGNAL MAST ARM, ATTACHED VEHICLE SIGNAL HEADS AND INTERNALLY ILLUMINATED STREET NAME SIGN
		CONTROLLER ASSEMBLY. DOOR INDICATES FRONT OF CABINET

SIGNAL EQUIPMENT Cont

NEW	EXISTING	
		GUARD POST
		TYPE 1 STANDARD WITH RAMP METERING SIGN
		OPTICAL DETECTOR FOR THE EMERGENCY VEHICLE DETECTION SYSTEM

NOTES:

1. All signal sections shall be 12" unless shown otherwise.
2. Signal heads shall be provided with backplates unless shown otherwise.

ILLUMINATED OVERHEAD SIGN

NEW	EXISTING	
		SINGLE POST, SINGLE ILLUMINATED SIGN, BALANCED BUTTERFLY
		SINGLE POST, DOUBLE ILLUMINATED SIGN, BALANCED BUTTERFLY
		SINGLE POST, SINGLE ILLUMINATED SIGN, FULL CANTILEVER
		DOUBLE POST, SINGLE ILLUMINATED SIGN
		SINGLE ILLUMINATED SIGN MOUNTED ON STRUCTURE
		DOUBLE POST, SINGLE ILLUMINATED SIGN WITH ELECTROLIER

STATE OF CALIFORNIA
DEPARTMENT OF TRANSPORTATION

ELECTRICAL SYSTEMS (LEGEND AND ABBREVIATIONS)

NO SCALE

RSP ES-1B DATED JULY 19, 2013 SUPERSEDES STANDARD PLAN ES-1B DATED MAY 20, 2011 - PAGE 426 OF THE STANDARD PLANS BOOK DATED 2010.

REVISED STANDARD PLAN RSP ES-1B

2010 REVISED STANDARD PLAN RSP ES-1B

7-15-13

Dist	COUNTY	ROUTE	POST MILES TOTAL PROJECT	SHEET No.	TOTAL SHEETS
07	LA	91	R11.3/R20.7	174	192

Theresa Gabriel
REGISTERED ELECTRICAL ENGINEER

July 19, 2013
PLANS APPROVAL DATE

REGISTERED PROFESSIONAL ENGINEER
Theresa Aziz Gabriel
No. E15129
Exp. 6-30-14
ELECTRICAL
STATE OF CALIFORNIA

THE STATE OF CALIFORNIA OR ITS OFFICERS OR AGENTS SHALL NOT BE RESPONSIBLE FOR THE ACCURACY OR COMPLETENESS OF SCANNED COPIES OF THIS PLAN SHEET.

TO ACCOMPANY PLANS DATED 8-10-15

EQUIPMENT IDENTIFICATION

ILLUMINATED SIGN IDENTIFICATION NUMBER:

SIGN No. 12345
10 ISL SCI 1.0

- SIGN NUMBER - PLACE ON POST OR STRUCTURE
- TRANSFORMER RATING (kVA)
- LIGHTING CONTROL TYPE
- NUMBER AND TYPE OF FIXTURES

DO NOT PLACE ON STANDARD OR STRUCTURE

ELECTROLIER OR EQUIPMENT IDENTIFICATION NUMBER:

12345 - 15'-0"

- MAST ARM LENGTH, IF SHOWN. DO NOT PLACE ON STANDARD OR STRUCTURE
- EQUIPMENT NUMBER - PLACE ON STANDARD OR STRUCTURE. EXISTING EQUIPMENT NUMBERS ARE SHOWN IN PARENTHESIS

CONDUIT AND CONDUCTOR IDENTIFICATION:

1½"C, 2#10, 15#14, 2 DLC, 12P#18

- PAIR
- NUMBER AND SIZE OF CONDUCTORS AND CABLES
- SIZE OF CONDUIT IN INCHES

ø1, ø2, ø2P, etc.	TRAFFIC PHASE IDENTIFICATION FOR SIGNAL FACES, DETECTORS AND PHASE DIAGRAMS
1 2 3	LEGEND NUMBERS
A B C	EQUIPMENT, SIGNAL POLES, INSTALLATION OR ITEMS
1 2 3	CONDUIT RUN NUMBERS

SIGNAL AND LIGHTING STANDARD (TYPICAL DESIGNATION):

19A - 3 - 100

- WIND VELOCITY = 100 mph
- CASE 3 ARM LOADING
- STANDARD TYPE
- STANDARD PLAN SHEET NUMBER
- DETAIL, NUMBER, SECTION, TYPE OR ELEVATION

MISCELLANEOUS EQUIPMENT

NEW	EXISTING	
CMS	cms	CHANGEABLE MESSAGE SIGN
		CLOSED CIRCUIT TELEVISION CAMERA
		HIGHWAY ADVISORY RADIO POLE AND ANTENNA
EMS	ems	EXTINGUISHABLE MESSAGE SIGN
M V	m v	DETECTION DEVICE M = MICROWAVE SENSOR V = VIDEO IMAGE SENSOR

WIRING DIAGRAM LEGEND

----	EXTERNAL CONDUCTOR
	CONDUCTOR OR BUS
	TIE POINT
	CONTACTOR COIL
	CONTACTOR, NO CONTACT
	TERMINAL BLOCKS
	CONTACTOR, NC CONTACT
	ENCLOSURE BOND
	GROUNDING ELECTRODE
	CIRCUIT BREAKER
	RECEPTACLE

PULL BOXES

NEW	EXISTING	
		PULL BOX, No. 5 UNLESS OTHERWISE INDICATED OR NOTED
3	9A(21)	PULL BOX, ADDITIONAL DESIGNATIONS OR DESCRIPTIONS

3 No. 3½ PULL BOX
5 No. 5 PULL BOX
6 No. 6 PULL BOX
7 No. 7 (CEILING PULL BOX)
8 No. 8 (PENDANT SOFFIT PULL BOX)
9 No. 9 PULL BOX
9A No. 9A PULL BOX

(C) COMMUNICATIONS PULL BOX
(E) PULL BOX WITH EXTENSION
(S) SPRINKLER CONTROL PULL BOX
(21) ANCHOR BOLTS AND CONDUIT FOR FUTURE INSTALLATION OF TYPE 21 STANDARD
(T) TRAFFIC PULL BOX

VEHICLE DETECTORS

5 J 9 U

- VEHICLE DETECTOR DESIGNATION
- U = UPPER
  L = LOWER
- SLOT NUMBER IN INPUT FILE
- INPUT FILE (I OR J)
- PHASE

NEW	EXISTING	
		TYPE A DETECTOR LOOP. OUTLINE OF SAWCUT SHOWN
		TYPE B DETECTOR LOOP. OUTLINE OF SAWCUT SHOWN
		TYPE C DETECTOR LOOP. OUTLINE OF SAWCUT SHOWN
		TYPE D DETECTOR LOOP. OUTLINE OF SAWCUT SHOWN
		TYPE E DETECTOR LOOP. OUTLINE OF SAWCUT SHOWN
		TYPE Q DETECTOR LOOP. OUTLINE OF SAWCUT SHOWN
		MAGNETIC DETECTOR
DH	dh	DETECTOR HANDHOLE
		MICROWAVE OR VIDEO DETECTION ZONE

STATE OF CALIFORNIA
DEPARTMENT OF TRANSPORTATION

ELECTRICAL SYSTEMS (LEGEND AND ABBREVIATIONS)

NO SCALE

RSP ES-1C DATED JULY 19, 2013 SUPERSEDES STANDARD PLAN ES-1C DATED MAY 20, 2011 - PAGE 427 OF THE STANDARD PLANS BOOK DATED 2010.

REVISED STANDARD PLAN RSP ES-1C

2010 REVISED STANDARD PLAN RSP ES-1C

7-11-13

Dist	COUNTY	ROUTE	POST MILES TOTAL PROJECT	SHEET No.	TOTAL SHEETS
07	LA	91	R11.3/R20.7	175	192

Theresa Gabriel
REGISTERED ELECTRICAL ENGINEER

October 17, 2014
PLANS APPROVAL DATE

REGISTERED PROFESSIONAL ENGINEER
Theresa Aziz Gabriel
No. E15129
Exp. 6-30-16
ELECTRICAL
STATE OF CALIFORNIA

THE STATE OF CALIFORNIA OR ITS OFFICERS OR AGENTS SHALL NOT BE RESPONSIBLE FOR THE ACCURACY OR COMPLETENESS OF SCANNED COPIES OF THIS PLAN SHEET.

TO ACCOMPANY PLANS DATED 8-10-15

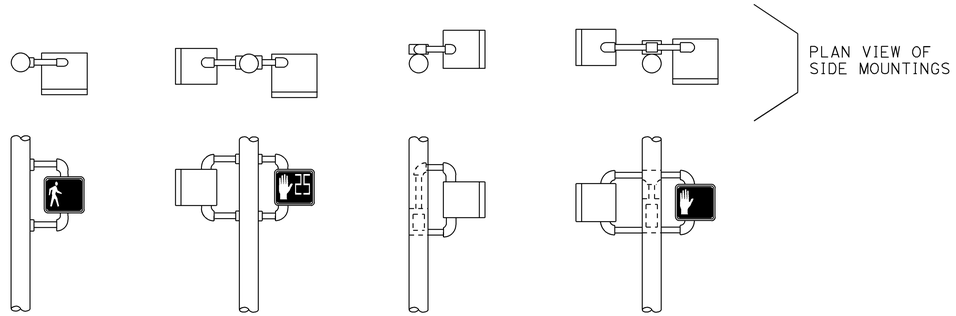

SP-1 SP-2 SP-1-T SP-2-T

SIDE MOUNTINGS

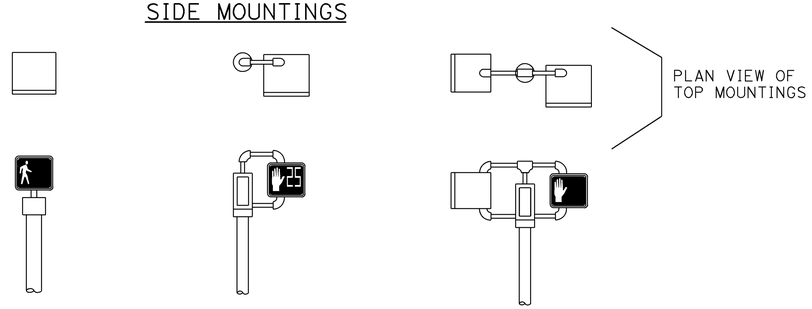

TP-1 TP-1-T TP-2-T

TOP MOUNTINGS

PEDESTRIAN SIGNALS AND MOUNTINGS

DETAIL A

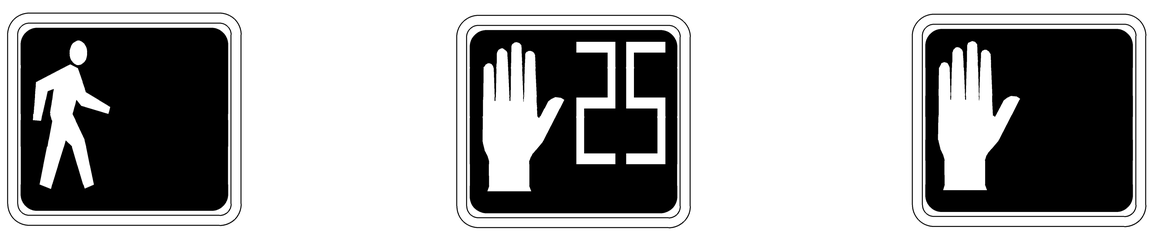

PERSON WALKING INTERVAL FLASHING UPRAISED HAND INTERVAL STEADY UPRAISED HAND INTERVAL

PEDESTRIAN SIGNAL MODULE WITH COUNTDOWN

DETAIL B

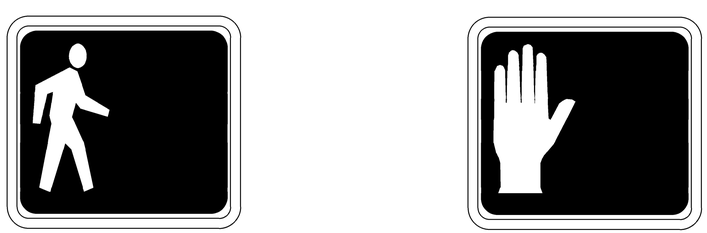

PERSON WALKING INTERVAL STEADY UPRAISED HAND INTERVAL

PEDESTRIAN SIGNAL MODULE WITHOUT COUNTDOWN

DETAIL C

NOTES:

1. Mounting shall be oriented to provide maximum horizontal clearance to adjacent roadway.
2. Bracket arms shall be long enough to permit proper alignment of signals.
3. See Standard Plan ES-4D for attachment fittings details.

ABBREVIATIONS:

1, 2	NUMBER OF SIGNAL FACES
SP	SIDE MOUNTED PEDESTRIAN SIGNAL
T	TERMINAL COMPARTMENT
TP	TOP MOUNTED PEDESTRIAN SIGNAL

STATE OF CALIFORNIA
DEPARTMENT OF TRANSPORTATION

ELECTRICAL SYSTEMS (PEDESTRIAN SIGNAL)

NO SCALE

RSP ES-4B DATED OCTOBER 17, 2014 SUPERSEDES RSP ES-4B DATED JULY 19, 2013 AND STANDARD PLAN ES-4B DATED MAY 20, 2011 - PAGE 444 OF THE STANDARD PLANS BOOK DATED 2010.

REVISED STANDARD PLAN RSP ES-4B

2010 REVISED STANDARD PLAN RSP ES-4B

9-23-14

Dist	COUNTY	ROUTE	POST MILES TOTAL PROJECT	SHEET No.	TOTAL SHEETS
07	LA	91	R11.3/R20.7	176	192

Theresa Gabriel
REGISTERED ELECTRICAL ENGINEER

July 19, 2013
PLANS APPROVAL DATE

REGISTERED PROFESSIONAL ENGINEER
Theresa Aziz Gabriel
No. E15129
Exp. 6-30-14
ELECTRICAL
STATE OF CALIFORNIA

THE STATE OF CALIFORNIA OR ITS OFFICERS OR AGENTS SHALL NOT BE RESPONSIBLE FOR THE ACCURACY OR COMPLETENESS OF SCANNED COPIES OF THIS PLAN SHEET.

TO ACCOMPANY PLANS DATED 8-10-15

VISORS

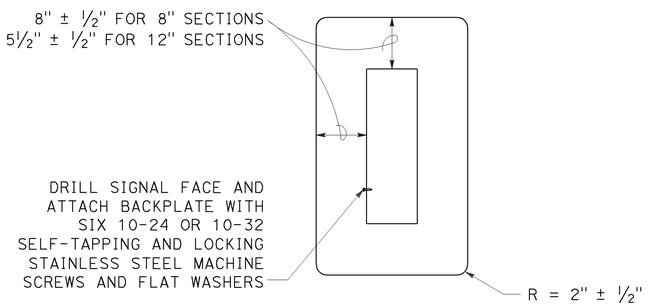

8" AND 12" SECTIONS

BACKPLATE

1/16" minimum thickness
3001-14 aluminum or plastic
when specified

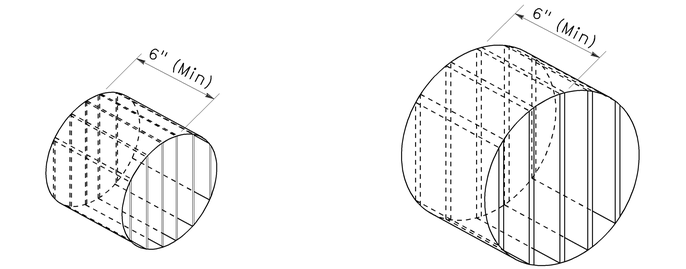

ISOMETRIC VIEW

ISOMETRIC VIEW

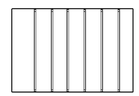

SECTION A-A

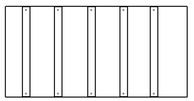

SECTION B-B

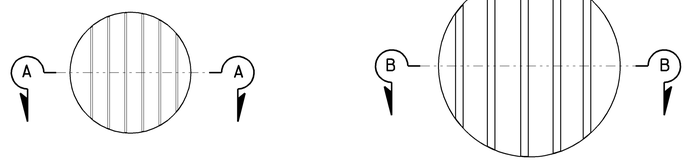

8" DIAMETER FRONT VIEW

12" DIAMETER FRONT VIEW

DIRECTIONAL LOUVER

Directional louvers shall be oriented as directed by the Engineer and secured in place with one plated brass machine screw and nut.

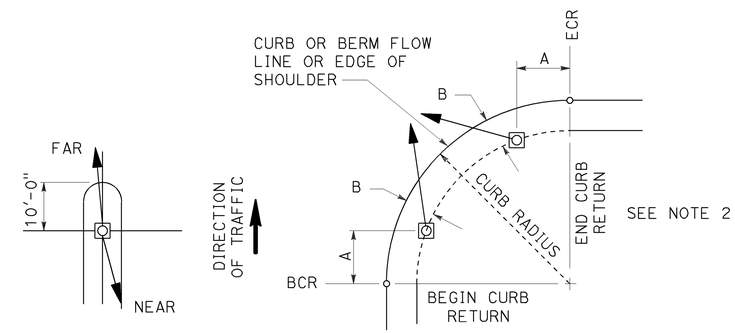

NOTES:

1. Typical signal pole placement unless dimensioned on plans.
2. For A and B dimensions, see Pole Schedule, or as directed by the Engineer.

SIGNAL STANDARD PLACEMENT DIMENSIONS AND EQUIPMENT LOCATIONS

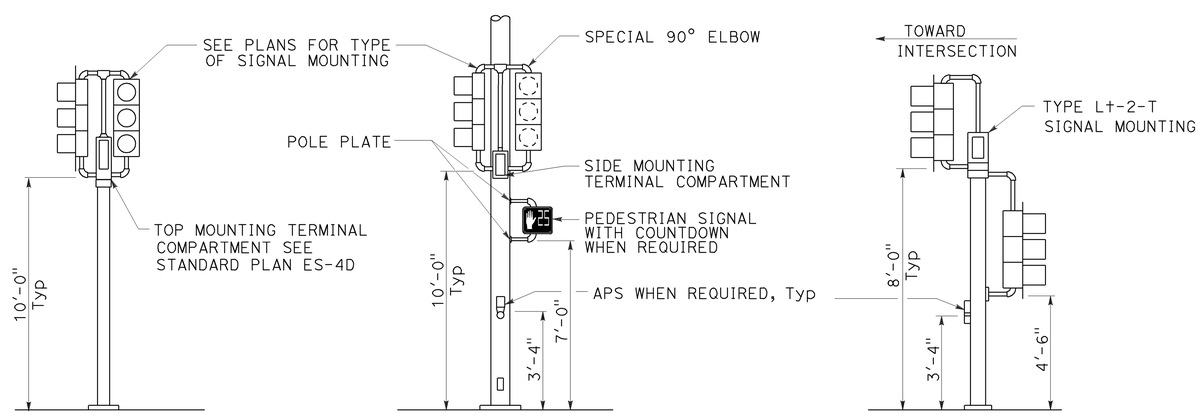

TOP MOUNTED SIGNALS (TV)

Type 1-A, 1-B, 1-C and 1-D standard as indicated on the plans

SIDE MOUNTED SIGNALS (SV AND SP)

Normally used on standards with luminaire or signal mast arm

LEFT TURN LANE SIGNAL

Type 1-A, 1-B, 1-C and 1-D standard as indicated on plans

TYPICAL SIGNAL INSTALLATIONS

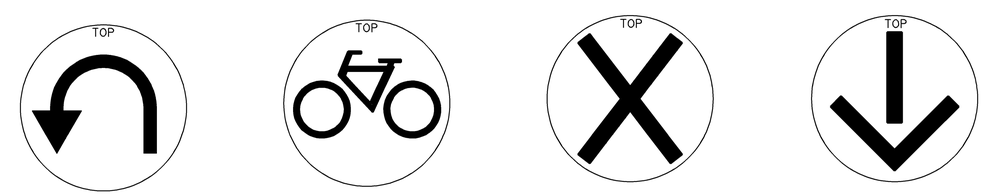

U-TURN

BICYCLE

LANE CONTROL

LANE CONTROL

SIGNAL FACES

STATE OF CALIFORNIA
DEPARTMENT OF TRANSPORTATION

ELECTRICAL SYSTEMS (VEHICULAR SIGNAL HEADS AND MOUNTINGS)

NO SCALE

RSP ES-4C DATED JULY 19, 2013 SUPERSEDES STANDARD PLAN ES-04C DATED MAY 20, 2011 - PAGE 445 OF THE STANDARD PLANS BOOK DATED 2010.

REVISED STANDARD PLAN RSP ES-4C

2010 REVISED STANDARD PLAN RSP ES-4C

7-10-13

Dist	COUNTY	ROUTE	POST MILES TOTAL PROJECT	SHEET No.	TOTAL SHEETS
07	LA	91	R11.3/R20.7	177	192

Theresa Gabriel
REGISTERED ELECTRICAL ENGINEER

July 19, 2013
PLANS APPROVAL DATE

REGISTERED PROFESSIONAL ENGINEER Theresa Aziz Gabriel No. E15129 Exp. 6-30-14 ELECTRICAL STATE OF CALIFORNIA

THE STATE OF CALIFORNIA OR ITS OFFICERS OR AGENTS SHALL NOT BE RESPONSIBLE FOR THE ACCURACY OR COMPLETENESS OF SCANNED COPIES OF THIS PLAN SHEET.

TO ACCOMPANY PLANS DATED 8-10-15

2010 REVISED STANDARD PLAN RSP ES-5B

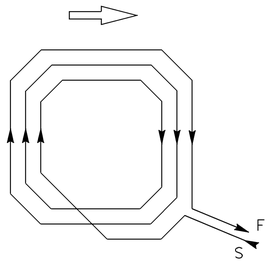

WINDING DETAIL

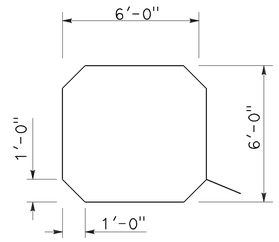

SAWCUT DETAIL

TYPE A LOOP DETECTOR CONFIGURATION

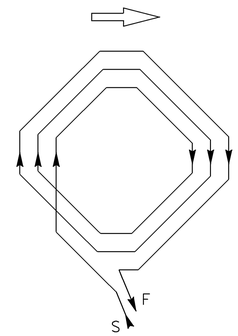

WINDING DETAIL

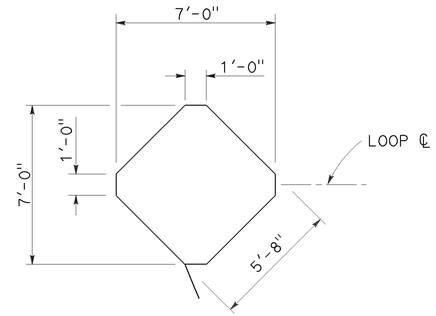

SAWCUT DETAIL

TYPE B LOOP DETECTOR CONFIGURATION

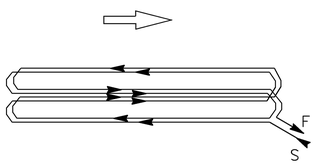

WINDING DETAIL

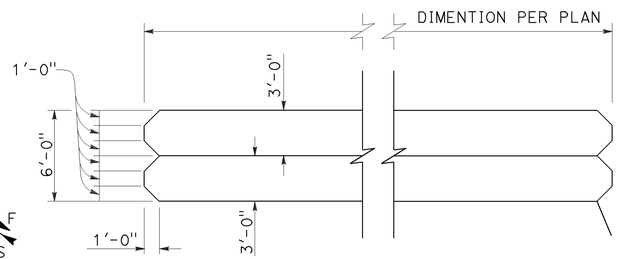

SAWCUT DETAIL

TYPE C LOOP DETECTOR CONFIGURATION

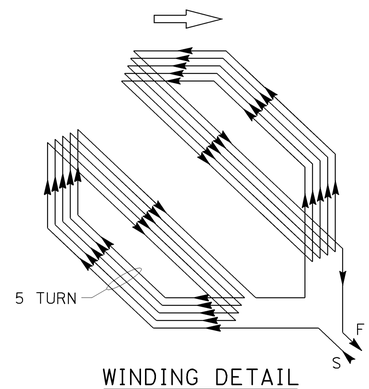

WINDING DETAIL

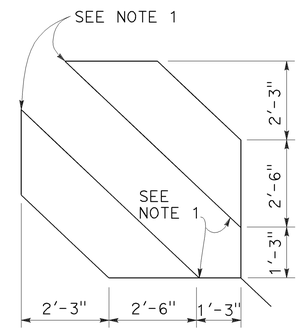

SAWCUT DETAIL

TYPE D LOOP DETECTOR CONFIGURATION

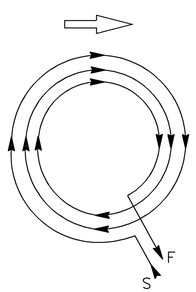

WINDING DETAIL

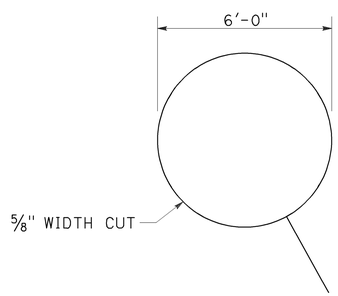

SAWCUT DETAIL

TYPE E LOOP DETECTOR CONFIGURATION

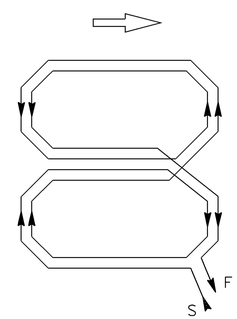

WINDING DETAIL

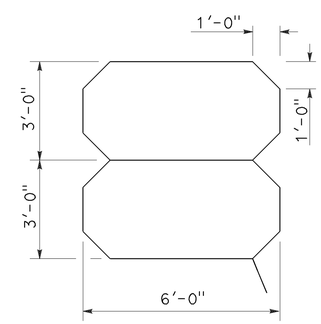

SAWCUT DETAIL

TYPE Q LOOP DETECTOR CONFIGURATION

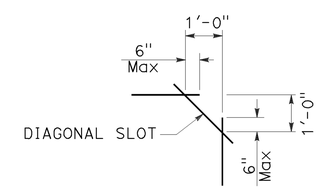

PLAN VIEW OF DIAGONAL SLOT AT CORNERS

NOTES:

1. Round corners of acute angle sawcuts to prevent damage to conductors.
2. Typical distance separating loops from edge to edge is 10' for Type A, B, D and E installation in single lane.

STATE OF CALIFORNIA
DEPARTMENT OF TRANSPORTATION

ELECTRICAL SYSTEMS (DETECTORS)

NO SCALE

RSP ES-5B DATED JULY 19, 2013 SUPERSEDES STANDARD PLAN ES-5B DATED MAY 20, 2011 - PAGE 449 OF THE STANDARD PLANS BOOK DATED 2010.

REVISED STANDARD PLAN RSP ES-5B

Dist	COUNTY	ROUTE	POST MILES TOTAL PROJECT	SHEET No.	TOTAL SHEETS
07	LA	91	R11.3/R20.7	178	192

Theresa Gabriel
REGISTERED ELECTRICAL ENGINEER

July 19, 2013
PLANS APPROVAL DATE

REGISTERED PROFESSIONAL ENGINEER
Theresa Aziz Gabriel
No. E15129
Exp. 6-30-14
ELECTRICAL
STATE OF CALIFORNIA

THE STATE OF CALIFORNIA OR ITS OFFICERS OR AGENTS SHALL NOT BE RESPONSIBLE FOR THE ACCURACY OR COMPLETENESS OF SCANNED COPIES OF THIS PLAN SHEET.

TO ACCOMPANY PLANS DATED 8-10-15

2010 REVISED STANDARD PLAN RSP ES-5C

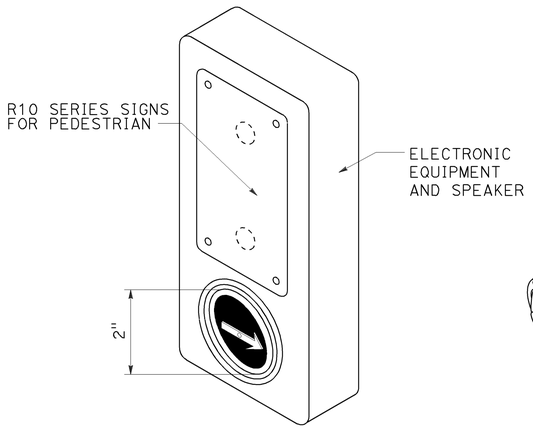

ACCESSIBLE PEDESTRIAN SIGNAL

DETAIL A
(See note 1 to 4)

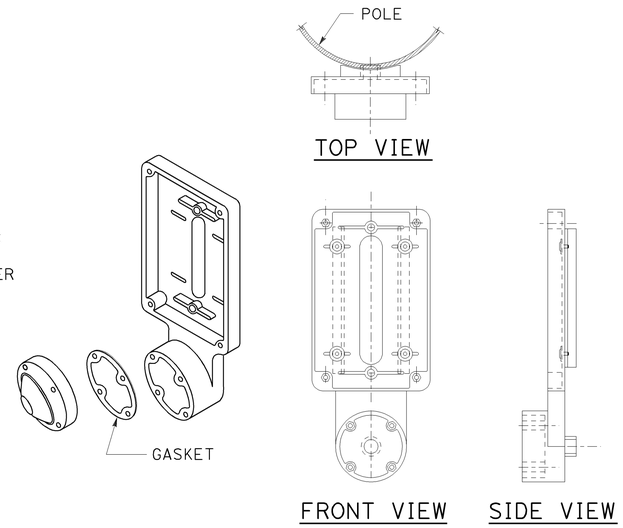

TYPE B PUSH BUTTON ASSEMBLY

DETAIL B
(See note 1 to 4)

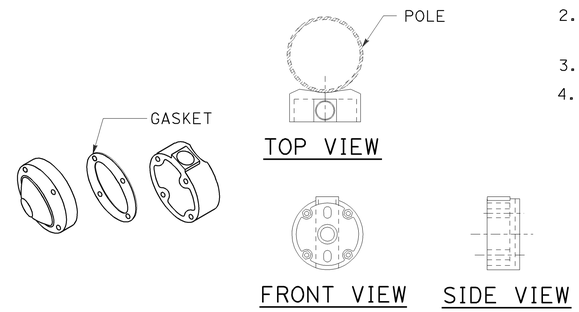

TYPE C PUSH BUTTON ASSEMBLY

DETAIL C
(See note 1 to 4)

NOTES:

1. Back casting shape to fit curvature of pole.
2. Provide cover fitting for top of post, when PBA is mounted on push button assembly post.
3. Install push button on crosswalk side of standard.
4. Use R10 series regulatory signs and plaques for pedestrian and bicycle facilities.

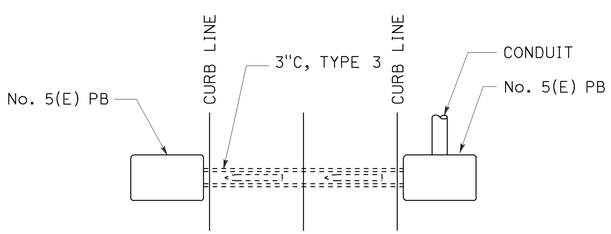

PLAN

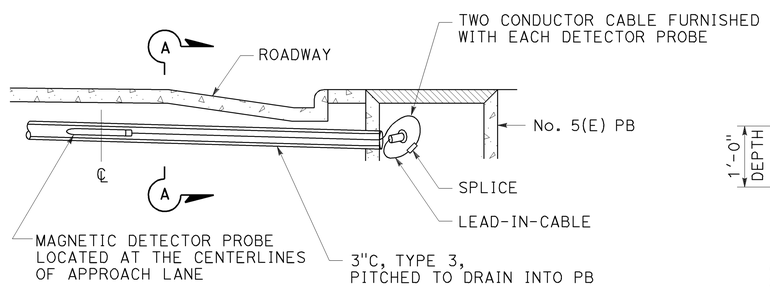

ELEVATION

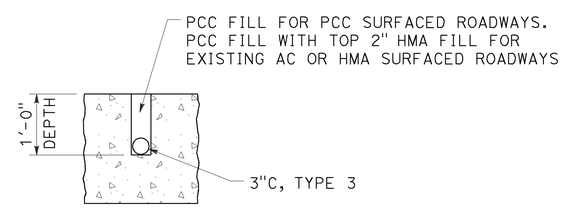

SECTION A-A

MAGNETIC VEHICLE DETECTOR

INSTALLATION DETAILS

DETAIL D

STATE OF CALIFORNIA
DEPARTMENT OF TRANSPORTATION

ELECTRICAL SYSTEMS (ACCESSIBLE PEDESTRIAN SIGNAL, PUSH BUTTON ASSEMBLIES AND MAGNETIC VEHICLE DETECTOR)

NO SCALE

RSP ES-5C DATED JULY 19, 2013 SUPERSEDES STANDARD PLAN ES-5C
DATED MAY 20, 2011 - PAGE 450 OF THE STANDARD PLANS BOOK DATED 2010.

REVISED STANDARD PLAN RSP ES-5C

Dist	COUNTY	ROUTE	POST MILES TOTAL PROJECT	SHEET No.	TOTAL SHEETS
07	LA	91	R11.3/R20.7	179	192

Theresa Gabriel
REGISTERED ELECTRICAL ENGINEER

July 19, 2013
PLANS APPROVAL DATE

REGISTERED PROFESSIONAL ENGINEER Theresa Aziz Gabriel No. E15129 Exp. 6-30-14 ELECTRICAL STATE OF CALIFORNIA

THE STATE OF CALIFORNIA OR ITS OFFICERS OR AGENTS SHALL NOT BE RESPONSIBLE FOR THE ACCURACY OR COMPLETENESS OF SCANNED COPIES OF THIS PLAN SHEET.

TO ACCOMPANY PLANS DATED 8-10-15

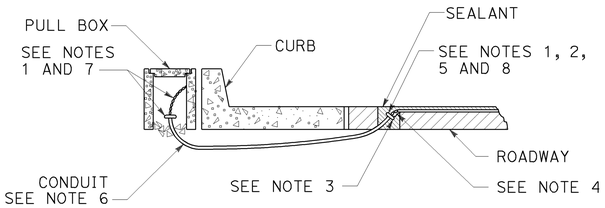

TYPE A
CURB TERMINATION DETAIL

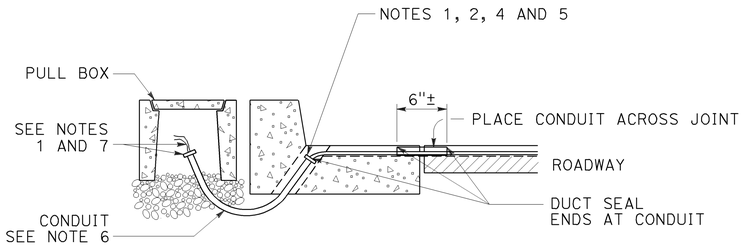

CROSS SECTION

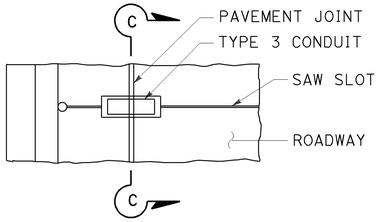

PLAN VIEW

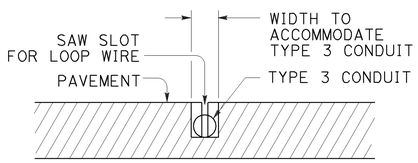

SECTION C-C

TYPE B
CURB TERMINATION DETAIL

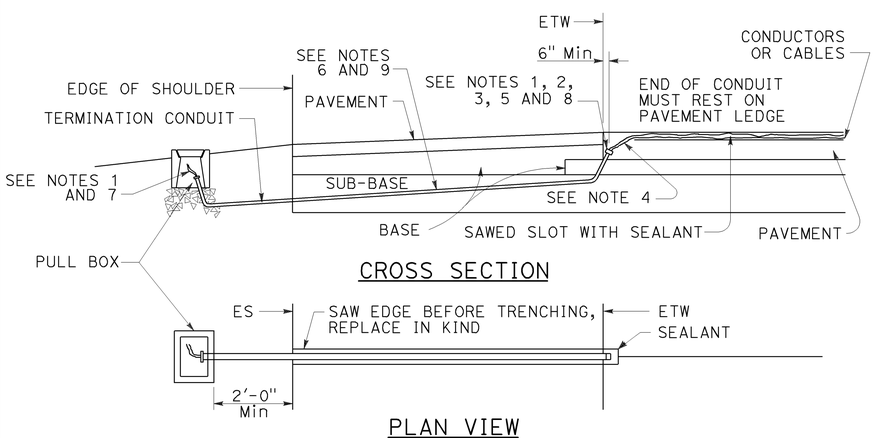

CROSS SECTION

PLAN VIEW

SHOULDER TERMINATION DETAILS

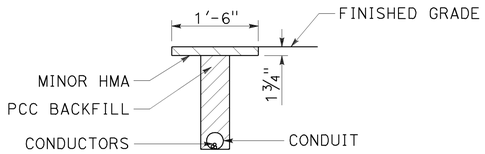

"T" TRENCH
DETAIL T

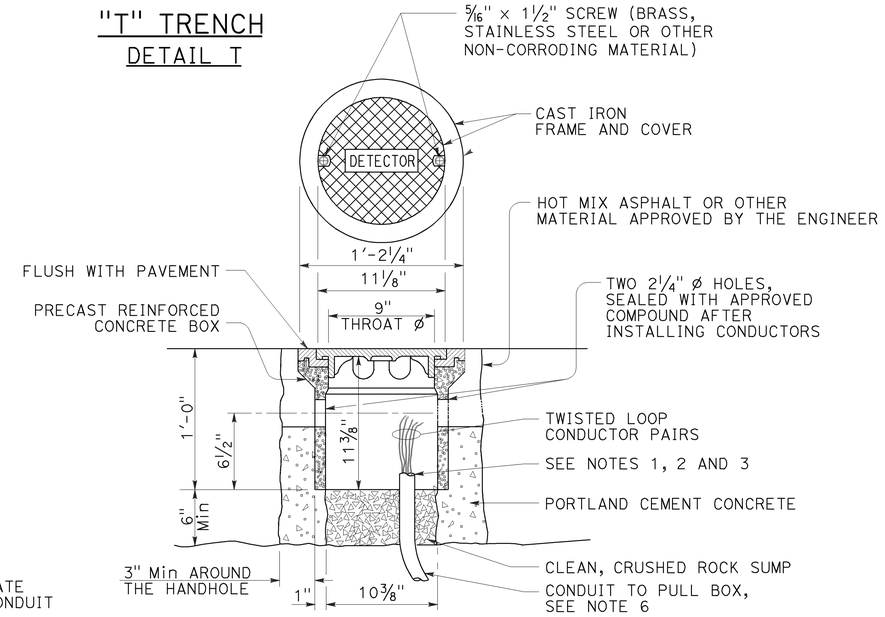

DETECTOR HANDHOLE DETAIL

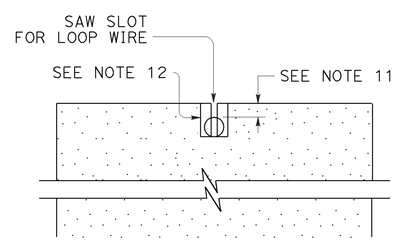

SECTION A-A

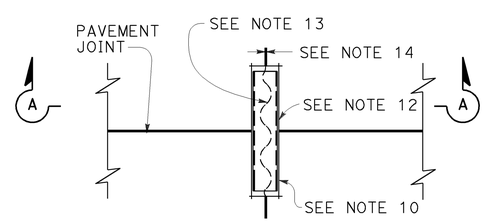

PLAN VIEW

TYPICAL LOOP LEAD-IN DETAIL AT PAVEMENT JOINT

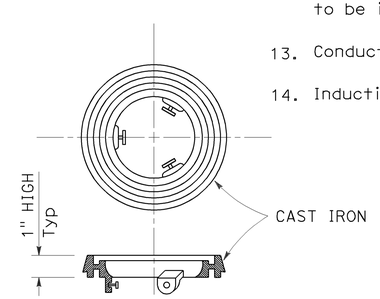

LOCKING GRADE RING

NOTES:

1. Bushing shall be used at end of conduit.
2. Tape detector conductors or cables 3" each side of bushings.
3. Install duct seal compound to each end of termination conduit before installing sealant.
4. Round all sharp edges where detector conductors or cables have to pass.
5. End of conduit shall be 3⅛" below roadway surface.
6. Conduit size / Loop conductors
   - 1"C minimum — 1 to 2 pairs
   - 1½"C minimum — 3 to 4 pairs
   - 2"C minimum — 5 or more pairs
7. Splice detector conductors or cables to detector lead-in-cable.
8. Location of detector handhole when shown on plans.
9. When the shoulder and traveled way are paved with the same material and there is no joint between them, the conduit shall extend only 2'-0" into the shoulder pavement.
10. ¾"C, Type 3 conduit 6" long minimum, plug both ends with duct compound to keep out sealant.
11. ½" Minimum between top of conduit and pavement surface.
12. Sawcut shall not exceed 1" in width and ⅛" longer than conduit to be installed.
13. Conductors with ½" minimum slack inside conduit.
14. Inductive loop detector saw slot.

STATE OF CALIFORNIA
DEPARTMENT OF TRANSPORTATION

ELECTRICAL SYSTEMS (CURB TERMINATION AND HANDHOLE)

NO SCALE

RSP ES-5D DATED JULY 19, 2013 SUPERSEDES STANDARD PLAN ES-5D DATED MAY 20, 2011 - PAGE 451 OF THE STANDARD PLANS BOOK DATED 2010.

REVISED STANDARD PLAN RSP ES-5D

2010 REVISED STANDARD PLAN RSP ES-5D

7-9-13

Dist	COUNTY	ROUTE	POST MILES TOTAL PROJECT	SHEET No.	TOTAL SHEETS
07	LA	91	R11.3/R20.7	180	192

REGISTERED CIVIL ENGINEER

July 19, 2013
PLANS APPROVAL DATE

REGISTERED PROFESSIONAL ENGINEER
Stanley P. Johnson
No. C57793
Exp. 3-31-14
CIVIL
STATE OF CALIFORNIA

THE STATE OF CALIFORNIA OR ITS OFFICERS OR AGENTS SHALL NOT BE RESPONSIBLE FOR THE ACCURACY OR COMPLETENESS OF SCANNED COPIES OF THIS PLAN SHEET.

TO ACCOMPANY PLANS DATED 8-10-15

2010 REVISED STANDARD PLAN RSP ES-7A

NOTES:

1. For additional notes, details and data for Type 15TS and Type 21TS Standards, see Standard Plan ES-6A.
2. Handhole shall be located on the downstream side of traffic.

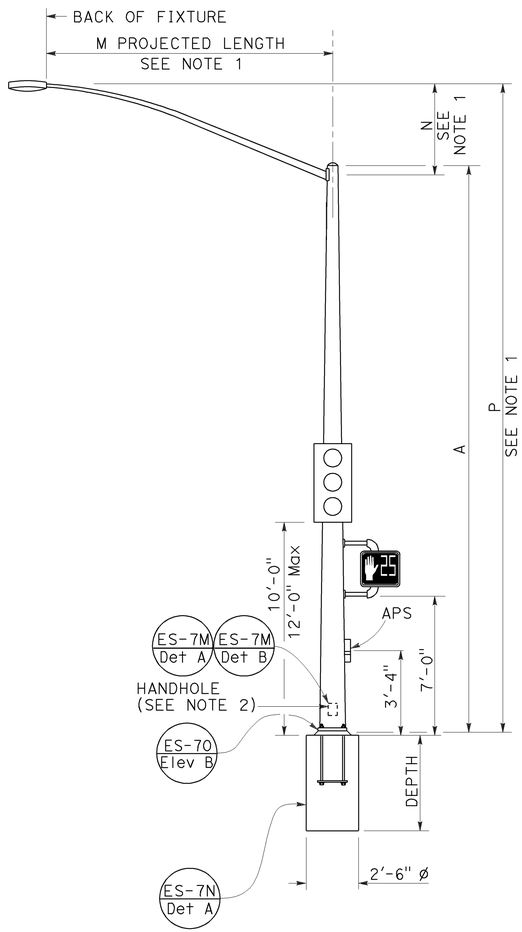

TYPE 15TS AND 21TS STANDARD

ELEVATION A

(See Note 1)

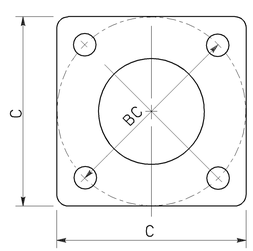

BASE PLATE

TYPE 15TS AND 21TS

DETAIL A

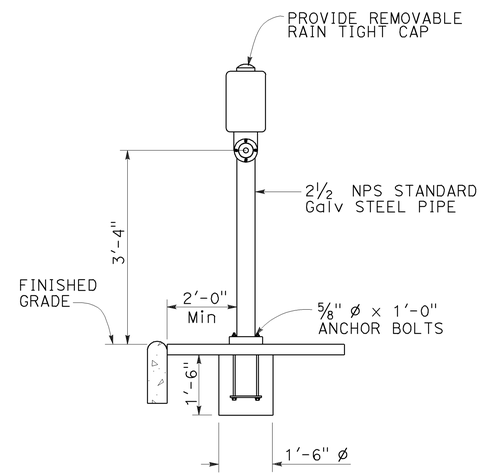

ELEVATION

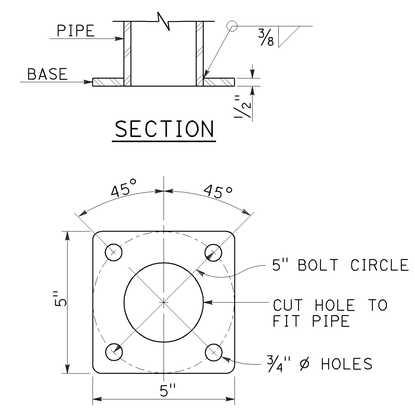

BASE PLATE

PBA POST

PUSH BUTTON ASSEMBLY POST

DETAIL B

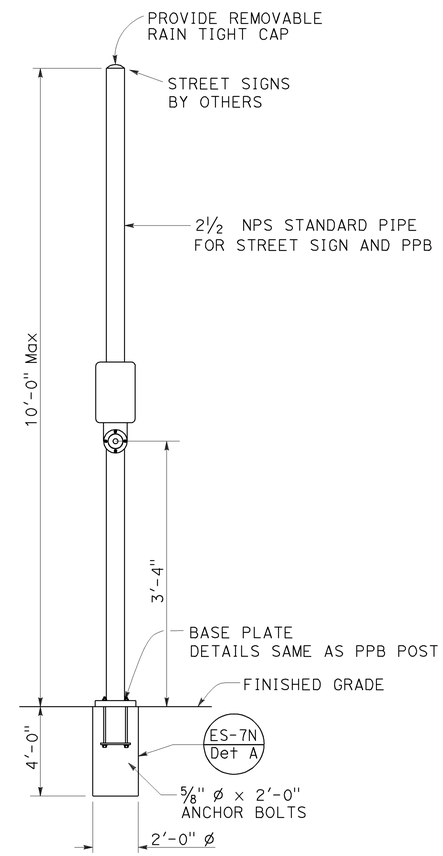

COMBINED STREET SIGN
PUSH BUTTON ASSEMBLY POST

DETAIL C

POLE TYPE	POLE DATA				BASE PLATE DATA				CIDH
	A HEIGHT	Min OD BASE	Min OD TOP	WALL THICKNESS	C	BC = BOLT CIRCLE	THICKNESS	ANCHOR BOLT SIZE	DEPTH
15TS	30'-0"	8"	3 11/16"	0.1793"	1'-1½"	1'-0"	2"	1½" ø x 42"	7'-6"
21TS	35'-0"	9⅜"	3 9/16"		1'-3"	1'-2"			8'-6"

STATE OF CALIFORNIA
DEPARTMENT OF TRANSPORTATION

ELECTRICAL SYSTEMS (SIGNAL AND LIGHTING STANDARD, TYPE TS, AND PUSH BUTTON ASSEMBLY POST)

NO SCALE

RSP ES-7A DATED JULY 19, 2013 SUPERSEDES STANDARD PLAN ES-7A DATED MAY 20, 2011 - PAGE 462 OF THE STANDARD PLANS BOOK DATED 2010.

REVISED STANDARD PLAN RSP ES-7A

DIST	COUNTY	ROUTE	POST MILES TOTAL PROJECT	SHEET NO.	TOTAL SHEETS
07	LA	91	R11.3/R20.7	181	192

Theresa Gabriel
REGISTERED ELECTRICAL ENGINEER

July 19, 2013
PLANS APPROVAL DATE

REGISTERED PROFESSIONAL ENGINEER Theresa Aziz Gabriel No. E15129 Exp. 6-30-14 ELECTRICAL STATE OF CALIFORNIA

THE STATE OF CALIFORNIA OR ITS OFFICERS OR AGENTS SHALL NOT BE RESPONSIBLE FOR THE ACCURACY OR COMPLETENESS OF SCANNED COPIES OF THIS PLAN SHEET.

TO ACCOMPANY PLANS DATED 8-10-15

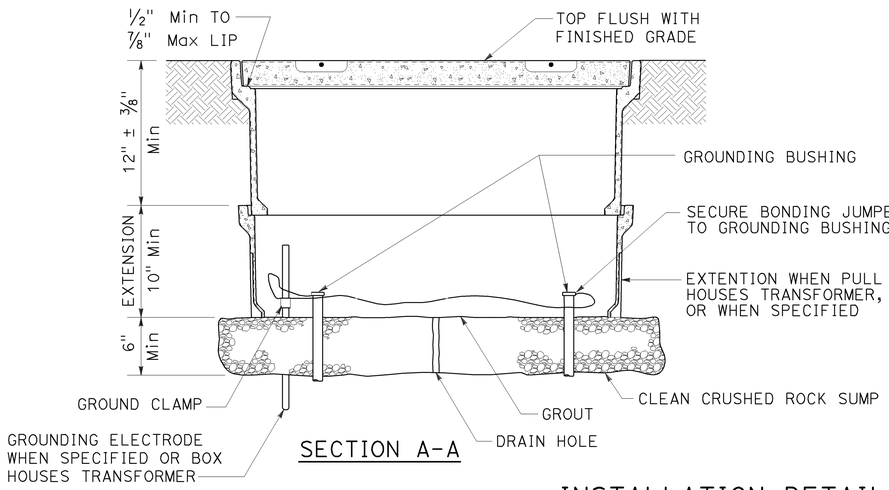

SECTION A-A

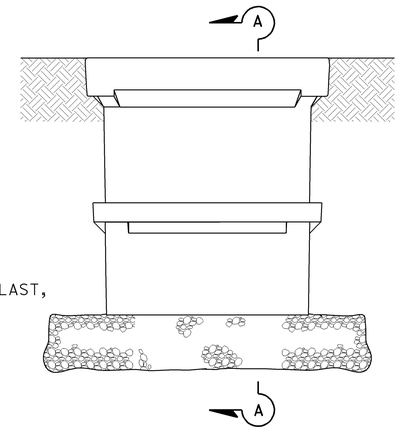

SIDE VIEW

INSTALLATION DETAILS

DETAIL A

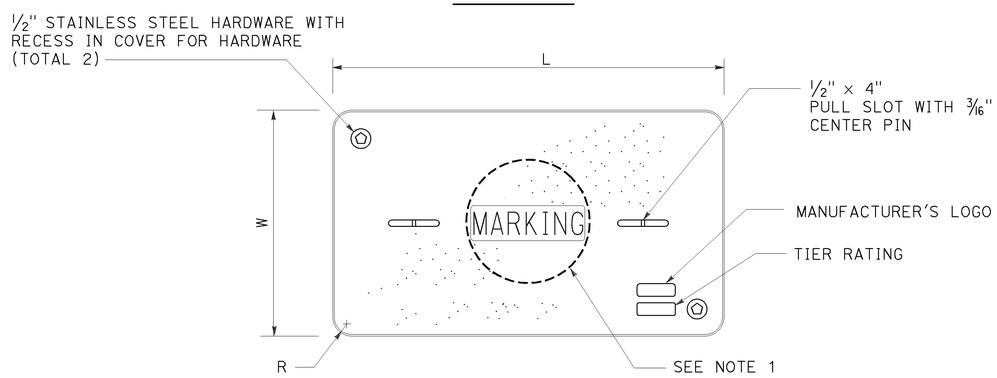

COVER TOP VIEW

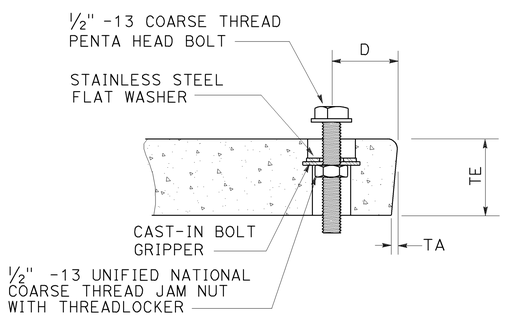

TYPICAL COVER CAPTIVE BOLT

OR SIMILAR

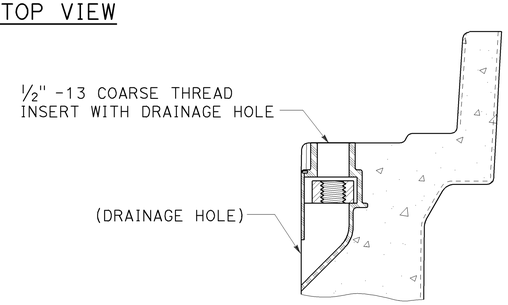

TYPICAL THREADED INSERT

OR SIMILAR

DIMENSION TABLE										
PULL BOX	PULL BOX			COVER						
	MINIMUM DEPTH BOX	MINIMUM DEPTH EXTENSION	MAXIMUM WEIGHT	L	W	R	TE	TA	D	MAXIMUM WEIGHT
No. 3½	12"	N/A	40 lb	1′ - 3⅜"	10⅛"	1⅜"	2"	⅛"	1¾"	30 lb
No. 5	12"	10"	55 lb	1′ - 11¼"	1′ - 1¾"	1⅜"	2"	⅛"	1¾"	60 lb
No. 6	12"	10"	70 lb	2′ - 6½"	1′ - 5½"	1⅜"	2"	⅛"	2"	85 lb

NOTES:

1. Pull box covers shall be marked as follows: "SERVICE" Service circuits between service point and service disconnect; "SPRINKLER-CONTROL" sprinkler control circuits, 50 V or less; "CALTRANS" on all pull boxes, except pull boxes marked "SPRINKLER-CONTROL"; and "TELEPHONE" Telephone service;
   - A) No. 3½ pull box.
     - 1) "SIGNAL" - Traffic signal circuits with or without lighting or sign lighting circuits.
     - 2) "LIGHTING" - Lighting or sign lighting circuits where voltage is under 600 V.
   - B) No. 5, 6, 9 or 9A pull box.
     - 1) "TRAFFIC SIGNAL" - Traffic signal circuits with or without lighting or sign lighting circuits.
     - 2) "LIGHTING" - Lighting or sign lighting circuits where voltage is under 600 V.
     - 3) "LIGHTING-HIGH VOLTAGE" - Lighting or sign lighting circuits where voltage is above 600 V.
     - 4) "IRRIGATION" - Circuits to irrigation controller 120 V or more.
     - 5) "RAMP METER" - Ramp meter circuits.
     - 6) "COUNT STATION" - Count or speed monitor circuits.
     - 7) "COMMUNICATIONS" - Communication circuits.
     - 8) "TOS COMMUNICATIONS" - TOS communication line.
     - 9) "TOS POWER" - TOS power.
     - 10) "TDC POWER" - Telephone demarcation cabinet power.
     - 11) "CCTV" - Closed circuit television circuits.
     - 12) "TMS" - Traffic monitoring station circuits.
     - 13) "CMS" - Changeable message sign circuits.
     - 14) "HAR" - Highway advisory radio circuits.
     - 15) "BOOSTER PUMP" - Booster pump circuit.
2. The nominal dimensions of the opening in which the cover sets shall be the same as the cover dimensions except the length and width dimensions shall be ⅛" greater.
3. Covers and boxes shall be interchangeable with California standard male and female gages. When interchanged with a standard male or female gage, the top surfaces shall be flush within ⅛". Top outside radius of covers and pull boxes shall have a ⅛" radius.
4. Pull box extension may be another pull box as long as the bottom edge of the pull box can fit into the cover opening.
5. All dimensions for the cover for non-traffic pull box are nominal values.

STATE OF CALIFORNIA
DEPARTMENT OF TRANSPORTATION

ELECTRICAL SYSTEMS (NON-TRAFFIC PULL BOX)

NO SCALE

RSP ES-8A DATED JULY 19, 2013 SUPERSEDES RSP ES-8A DATED JANUARY 20, 2012 THAT SUPPLEMENTS THE STANDARD PLANS BOOK DATED 2010.

REVISED STANDARD PLAN RSP ES-8A

2010 REVISED STANDARD PLAN RSP ES-8A

7-15-13

Dist	COUNTY	ROUTE	POST MILES TOTAL PROJECT	SHEET No.	TOTAL SHEETS
07	LA	91	R11.3/R20.7	182	192

Theresa Gabriel
REGISTERED ELECTRICAL ENGINEER

July 19, 2013
PLANS APPROVAL DATE

REGISTERED PROFESSIONAL ENGINEER
Theresa Aziz Gabriel
No. E15129
Exp. 6-30-14
ELECTRICAL
STATE OF CALIFORNIA

THE STATE OF CALIFORNIA OR ITS OFFICERS OR AGENTS SHALL NOT BE RESPONSIBLE FOR THE ACCURACY OR COMPLETENESS OF SCANNED COPIES OF THIS PLAN SHEET.

TO ACCOMPANY PLANS DATED 8-10-15

2010 REVISED STANDARD PLAN RSP ES-10A

ISOFOOTCANDLE CURVE - MINIMUM

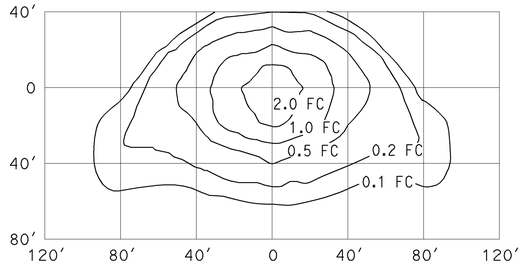

TYPE III MEDIUM CUTOFF

Cutoff Luminaire
34′ Mounting Height
Lamp operated at 22,000 lm
200-W high pressure sodium lamp
ANSI Designation S66

ISOFOOTCANDLE CURVE - MINIMUM

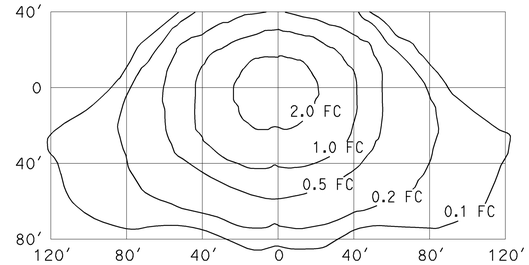

TYPE III MEDIUM CUTOFF

Cutoff Luminaire
40′ Mounting Height
Lamp operated at 37,000 lm
310-W high pressure sodium lamp
ANSI Designation S67

ISOFOOTCANDLE CURVE - MINIMUM

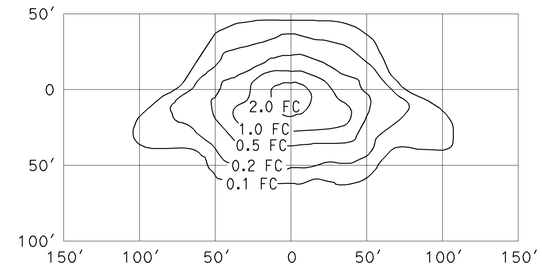

TYPE III MEDIUM CUTOFF

Cutoff Luminaire
30′ Mounting Height
Lamp operated at 16,000 lm
150-W high pressure sodium lamp
ANSI Designation S55

ISOFOOTCANDLE CURVE - MINIMUM

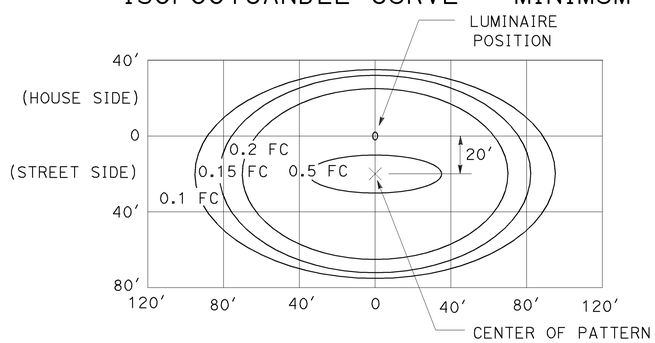

LED LUMINAIRE ROADWAY 1

165-W at 34′ Mounting Height

ISOFOOTCANDLE CURVE - MINIMUM

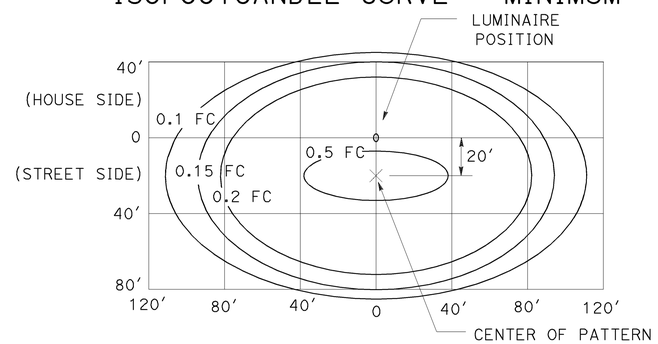

LED LUMINAIRE ROADWAY 2

235-W at 40′ Mounting Height

ISOFOOTCANDLE CURVE - MINIMUM

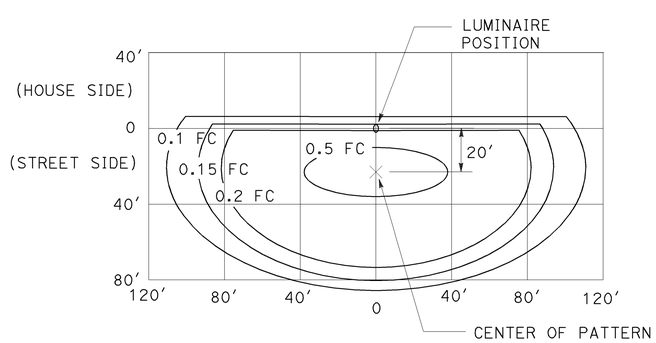

LED LUMINAIRE ROADWAY 3

235-W at 40′ Mounting Height
with back side control

ISOFOOTCANDLE CURVE - MINIMUM

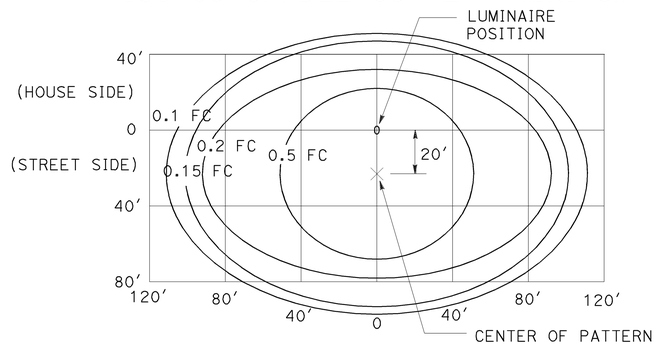

LED LUMINAIRE ROADWAY 4

300-W at 40′ Mounting Height

ISOFOOTCANDLE CURVE - MINIMUM

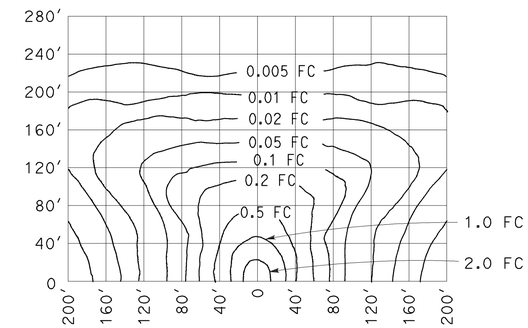

LOW PRESSURE SODIUM LUMINAIRE

40′ Mounting Height
Lamp operated at 33,000 lm
180-W low pressure sodium lamp

STATE OF CALIFORNIA
DEPARTMENT OF TRANSPORTATION

ELECTRICAL SYSTEMS (ISOFOOTCANDLE DIAGRAMS)

NO SCALE

RSP ES-10A DATED JULY 19, 2013 SUPERSEDES RSP ES-10A DATED JULY 20, 2012 THAT SUPPLEMENTS THE STANDARD PLANS BOOK DATED 2010.

REVISED STANDARD PLAN RSP ES-10A

Dist	COUNTY	ROUTE	POST MILES TOTAL PROJECT	SHEET No.	TOTAL SHEETS
07	LA	91	R11.3/R20.7	183	192

REGISTERED CIVIL ENGINEER

July 19, 2013
PLANS APPROVAL DATE

REGISTERED PROFESSIONAL ENGINEER
Stanley P. Johnson
No. C57793
Exp. 3-31-14
CIVIL
STATE OF CALIFORNIA

THE STATE OF CALIFORNIA OR ITS OFFICERS OR AGENTS SHALL NOT BE RESPONSIBLE FOR THE ACCURACY OR COMPLETENESS OF SCANNED COPIES OF THIS PLAN SHEET.

TO ACCOMPANY PLANS DATED 8-10-15

STANDARD TYPE	SETBACK (DIMENSION A)
32	30'-0" (Min)
31	20'-0" (Min)
15, 15D, 15-SB, 21, 21D, 30	ARM LENGTH (Min)

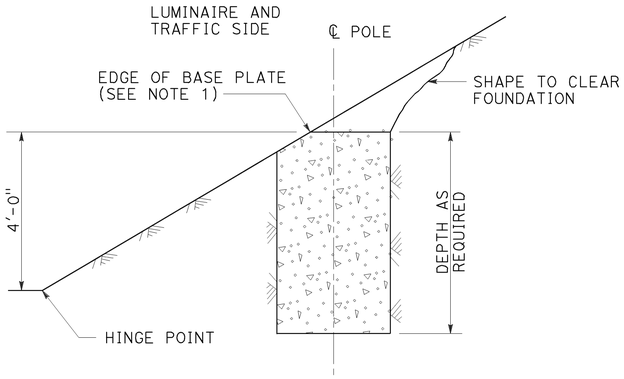

CUT SLOPES
STEEPER THAN 4:1,
LESS THAN 2:1
DETAIL A-1
See Note 2 and 3

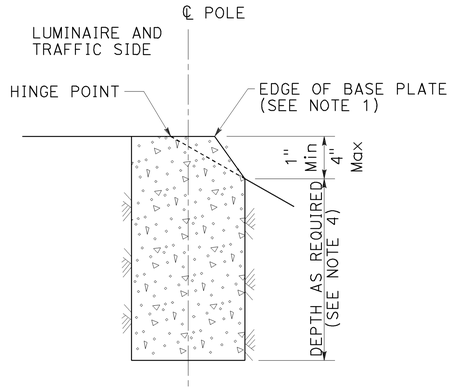

FILL SLOPES
STEEPER THAN 4:1,
LESS THAN 2:1
DETAIL A-2
See Note 2 and 3

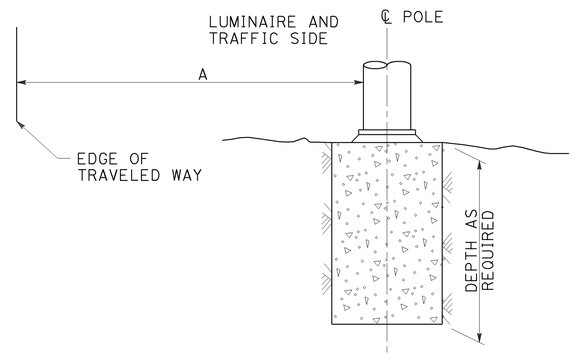

FLAT SECTIONS, CUT OR FILL SLOPES
4:1 OR FLATTER
DETAIL A-3
See Note 2

FOUNDATIONS ADJACENT TO ALL ROADWAYS EXCEPT
IN SIDEWALK, MEDIAN AND ISLAND AREAS
DETAIL A

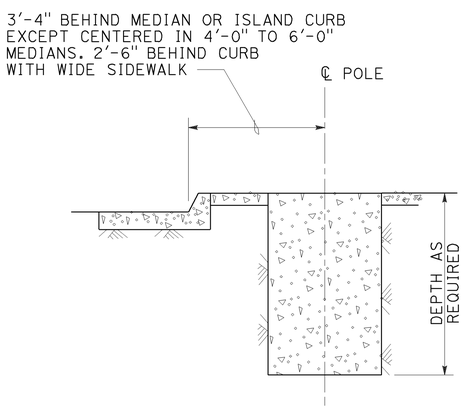

MEDIAN, ISLAND
OR WIDE SIDEWALK
DETAIL B-1
7' Wide and wider

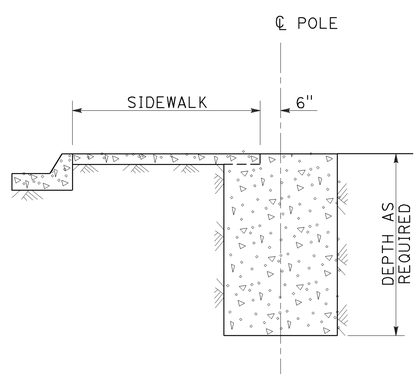

NARROW SIDEWALK
DETAIL B-2
Less than 7' wide

FOUNDATIONS IN SIDEWALK, MEDIAN AND ISLAND AREAS
DETAIL B

NOTES:

1. Where a portion of the foundation is above grade, the top edges shall have a 1" chamfer.
2. Slopes shall be horizontal to vertical ratio (Horizontal : Vertical).
3. Horizontal setbacks on cut and fill slopes steeper than 4:1 shall not exceed the distance shown for flat sections.
4. CIDH embedment depth shall be increased beyond standard depths by the diameter of the CIDH.

STATE OF CALIFORNIA
DEPARTMENT OF TRANSPORTATION

ELECTRICAL SYSTEMS (FOUNDATION INSTALLATIONS)

NO SCALE

RSP ES-11 DATED JULY 19, 2013 SUPERSEDES STANDARD PLAN ES-11
DATED MAY 20, 2011 - PAGE 488 OF THE STANDARD PLANS BOOK DATED 2010.

REVISED STANDARD PLAN RSP ES-11

2010 REVISED STANDARD PLAN RSP ES-11

7-9-13

DIST	COUNTY	ROUTE	POST MILES TOTAL PROJECT	SHEET No.	TOTAL SHEETS
07	LA	91	R11.3/R20.7	184	192

REGISTERED CIVIL ENGINEER 03/23/15 DATE

8-10-15
PLANS APPROVAL DATE

REGISTERED PROFESSIONAL ENGINEER EDWARD J. NAHM No. C66900 Exp. 09/30/16 STATE OF CALIFORNIA

The State of California or its officers or agents shall not be responsible for the accuracy or completeness of scanned copies of this plan sheet.

INDEX TO PLANS

SHEET NO.	TITLE
1	GENERAL PLAN
2	MISCELLANEOUS DETAILS NO. 1
3	MISCELLANEOUS DETAILS NO. 2
4	TEMPORARY SUPPORT DETAILS
5	COLUMN CASING - STEEL
6	CONCRETE BARRIER TYPE 60SD (TRANSITION AT BRIDGE COLUMN DETAILS NO. 1)
7	CONCRETE BARRIER TYPE 60SD (TRANSITION AT BRIDGE COLUMN DETAILS NO. 2)

BLOOMFIELD AVENUE OC (53-1433)
QUANTITIES

BRIDGE REMOVAL (PORTION)	LUMP	SUM
STRUCTURE EXCAVATION (TYPE Z-2)(AERIALLY DEPOSITED LEAD)	74	CY
STRUCTURE BACKFILL (BRIDGE)	74	CY
TEMPORARY SUPPORT	LUMP	SUM
STRUCTURAL CONCRETE, BRIDGE	4	CY
GALVANIC ANODE	60	EA
ASPHALT MEMBRANE WATERPROOFING	297	SQFT
COLUMN CASING	6,140	LB
CONCRETE BARRIER (TYPE 60SD)	216	LF

STANDARD PLANS DATED 2010

SHEET NO.	TITLE
A10A	ABBREVIATIONS (SHEET 1 OF 2)
RSP A10B	ABBREVIATIONS (SHEET 2 OF 2)
A10C	LINES AND SYMBOLS (SHEET 1 OF 3)
A10D	LINES AND SYMBOLS (SHEET 2 OF 3)
A10E	LINES AND SYMBOLS (SHEET 3 OF 3)
RSP A77U1	MIDWEST GUARDRAIL SYSTEM CONNECTIONS TO BRIDGE RAILING WITHOUT SIDEWALKS DETAILS NO. 1
RSP A77U2	MIDWEST GUARDRAIL SYSTEM CONNECTIONS TO BRIDGE RAILING WITHOUT SIDEWALKS DETAILS NO. 2
RSP A77U4	MIDWEST GUARDRAIL SYSTEM TRANSITION RAILING (TYPE WB-31)
B03	BRIDGE DETAILS

STANDARD PLAN SHEET NO.

DETAIL NO.

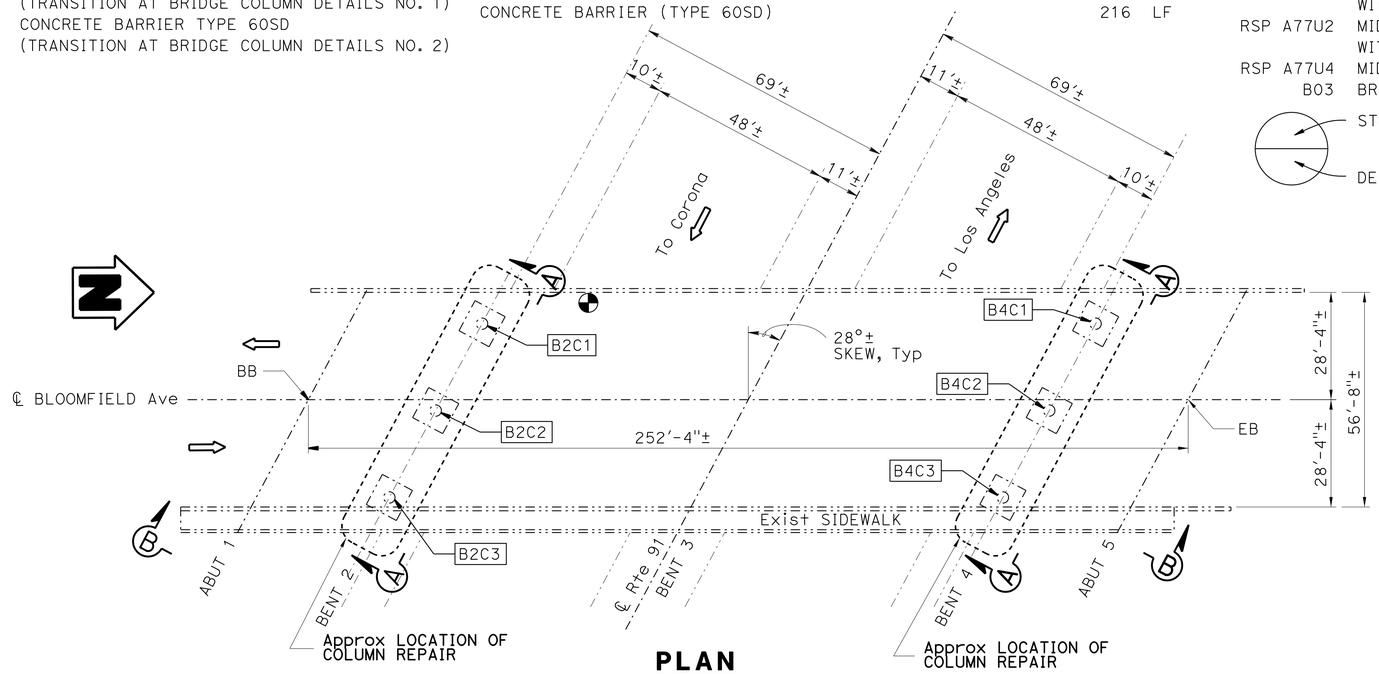

PLAN
1" = 20'

LEGEND:

-·-·-·-	Indicates existing.
———	Indicates new construction.
⇨	Indicates direction of traffic.
↑	Indicates location of Temporary Structure Supports.
1	Indicates bridge removal (portion), structural concrete (bridge), and steel column casing. See "MISCELLANEOUS DETAILS" sheet.
2	Indicates remove exist MBGR. See "ROADWAY PLANS".
3	Indicates new concrete barrier Type 60SD. See "TRANSITION AT BRIDGE COLUMN DETAILS NO. 1" and "TRANSITION AT BRIDGE COLUMN DETAILS NO. 2" sheets.
BxCx	Indicates column designation.
◐	Indicates Minimum Vertical Clearance (16'-6"±).

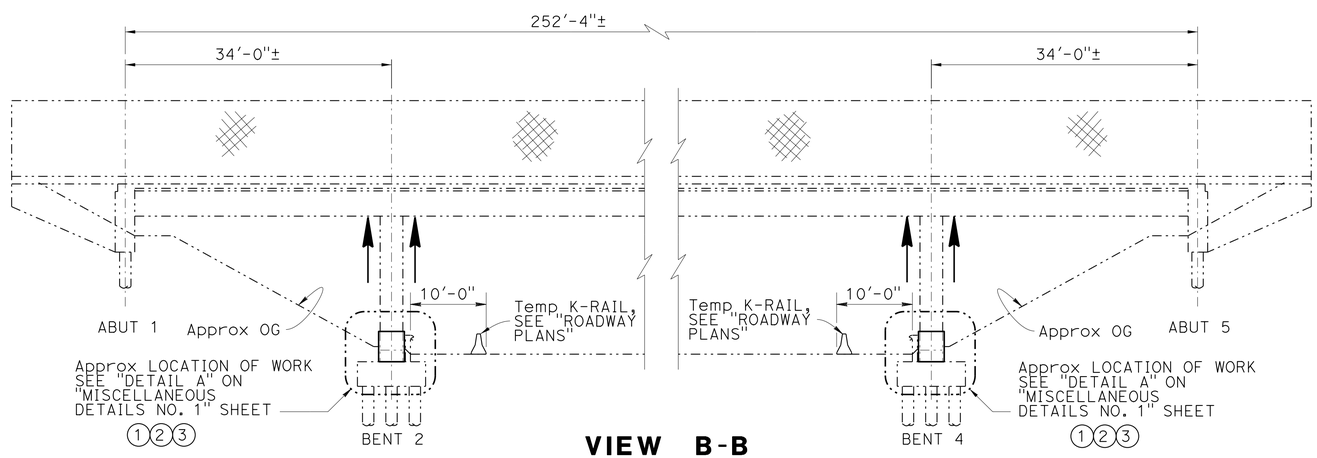

VIEW B-B
NO SCALE

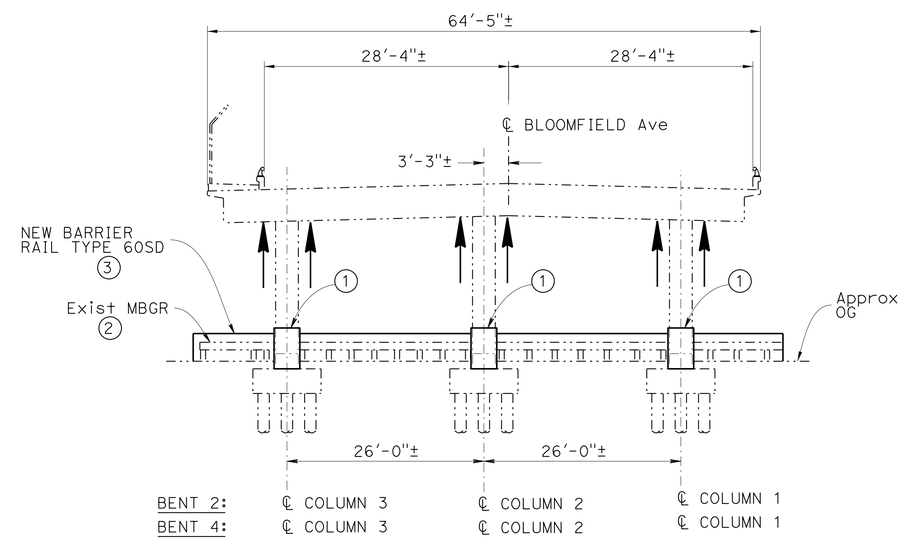

VIEW A-A
NO SCALE

NOTE:
THE CONTRACTOR MUST VERIFY ALL CONTROLLING FIELD DIMENSIONS BEFORE ORDERING OR FABRICATING ANY MATERIAL.
EXISTING UTILITY FACILITIES ARE NOT INCLUDED ON THESE PLANS.

	BY	CHECKED			
DESIGN	Edward Nahm	Tony Brake	LOAD FACTOR DESIGN	LIVE LOADING: HS20-44 AND ALTERNATIVE AND PERMIT DESIGN LOAD	
DETAILS	Tom Dang	Edward Nahm	LAYOUT	Tom Dang	Edward Nahm
QUANTITIES	Edward Nahm	Tony Brake	SPECIFICATIONS	Theresa Nedwick	Theresa Nedwick

Tony Brake
DESIGN ENGINEER

STATE OF CALIFORNIA
DEPARTMENT OF TRANSPORTATION

DIVISION OF MAINTENANCE
STRUCTURE MAINTENANCE DESIGN

BRIDGE NO. 53-1433
POST MILE R19.17

BLOOMFIELD AVENUE OC
GENERAL PLAN

STRUCTURES MAINTENANCE GENERAL PLAN SHEET (ENGLISH) (REV. 09-01-10)

ORIGINAL SCALE IN INCHES FOR REDUCED PLANS 0 1 2 3

UNIT: 3489
PROJECT NUMBER & PHASE: 0714000151-4
CONTRACT NO.: 07-306204

DISREGARD PRINTS BEARING EARLIER REVISION DATES
REVISION DATES 2-20-15 3-23-15

SHEET 01 OF 07

FILE => 53-1433-a-gp.dgn

USERNAME => s125624 DATE PLOTTED => 21-SEP-2015 TIME PLOTTED => 10:32

DIST	COUNTY	ROUTE	POST MILES TOTAL PROJECT	SHEET No.	TOTAL SHEETS
07	LA	91	R11.3/R20.7	185	192

REGISTERED CIVIL ENGINEER 03/23/15 DATE

8-10-15
PLANS APPROVAL DATE

REGISTERED PROFESSIONAL ENGINEER EDWARD J. NAHM No. C66900 Exp. 09/30/16 CIVIL STATE OF CALIFORNIA

The State of California or its officers or agents shall not be responsible for the accuracy or completeness of electronic copies of this plan sheet.

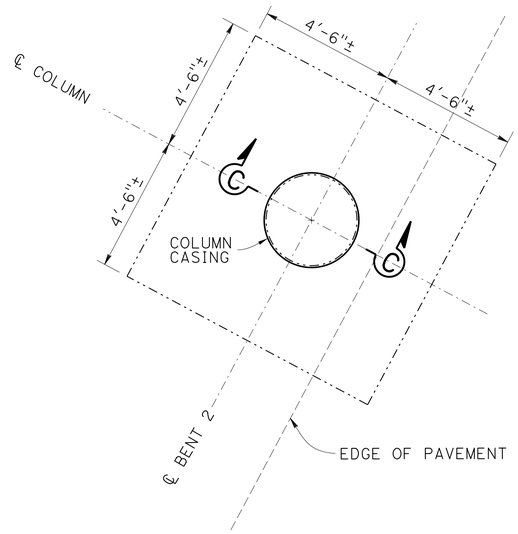

PART PLAN (COLUMN)

NO SCALE
(BENT 2 SHOWN, BENT 4 SIMILAR)

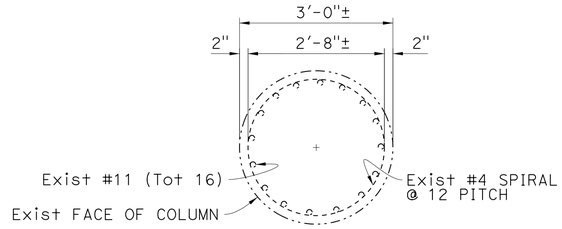

EXISTING

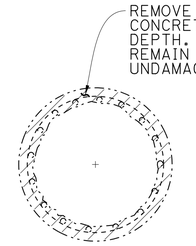

REMOVAL

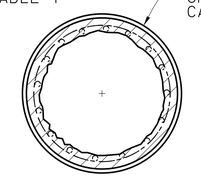

RECONSTRUCTION

SECTION D-D

NO SCALE

COLUMN REPAIR TABLE		
LOCATION	Approx DEPTH (INCH) *	Approx AREA (SQ FT)
B2C1	3	56
B2C2	3	56
B2C3	3	56
B4C1	3	63
B4C2	3	63
B4C3	3	63

* FINAL DEPTH AS DETERMINED BY THE ENGINEER

LEGEND:

-·-·-·-·-	Indicates existing.
———	Indicates new construction.
▨	Indicates limits of structural concrete (Bridge).
⊗	Indicates anti-corrosion galvanic anodes.
**	Field verification required.

NOTES:

1. Sawcut ½" deep along perimeter of concrete removal limit.
2. Remove unsound concrete to expose sound and hard concrete substrate.
3. It is responsibility of the Contractor to repair any reinforcement that is accidentally cut by saw cutting operation.
4. Existing reinforcement shall be protected in place during unsound concrete removal and patching operations.
5. Replace/clean all rusted and corroded reinforcing steel as determined by the Engineer.
6. Attached Galvanic Anodes to clean reinforcing steel per manufacturer's instructions.
7. Galvanic Anodes shall be attached around perimeter of repair area, spacing not to exceed manufacturer's recommendation.
8. For location of DETAIL A, see "GENERAL PLAN".

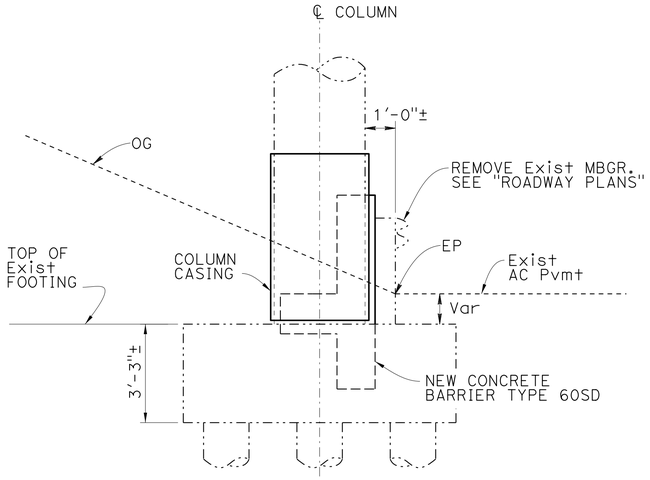

DETAIL A

NO SCALE
(BENT 2 SHOWN, BENT 4 SIMILAR)

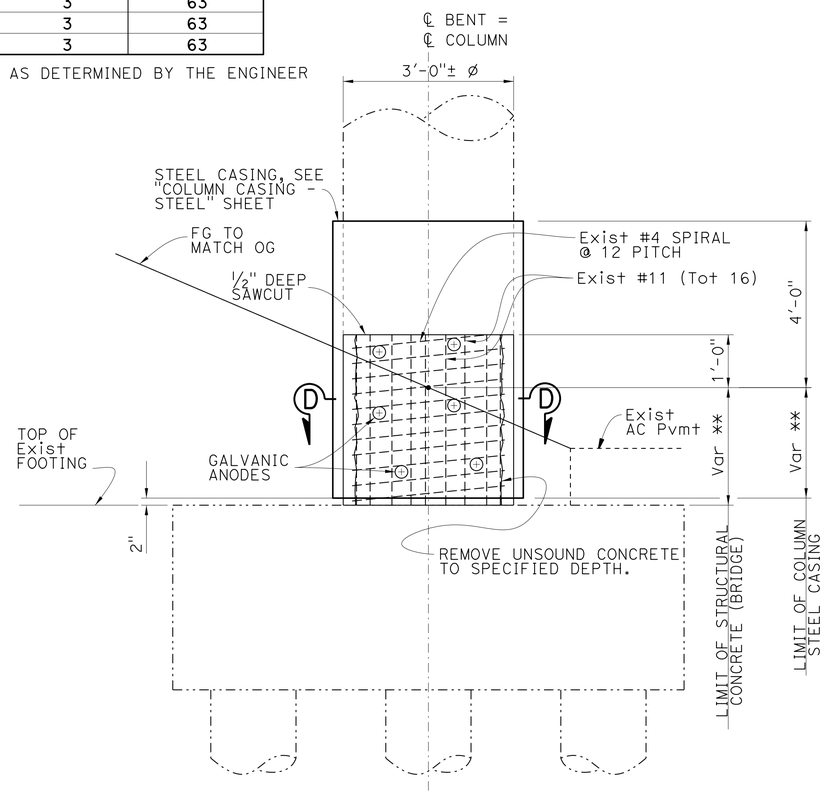

SECTION C-C

NO SCALE

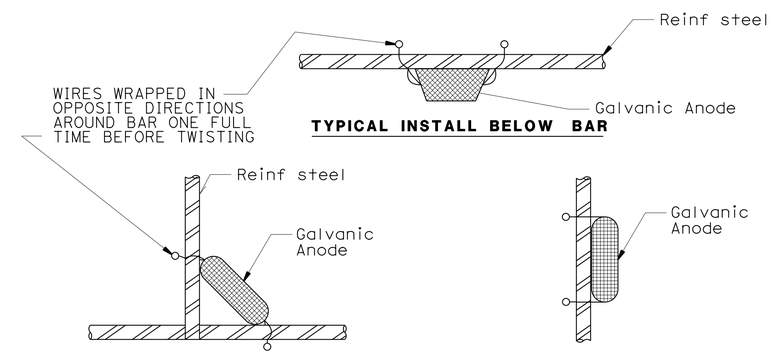

TYPICAL GALVANIC ANODE INSTALL DETAIL

NO SCALE

NOTE:
THE CONTRACTOR MUST VERIFY ALL CONTROLLING FIELD DIMENSIONS BEFORE ORDERING OR FABRICATING ANY MATERIAL. EXISTING UTILITY FACILITIES ARE NOT INCLUDED ON THESE PLANS.

	BY	CHECKED
DESIGN	Edward Nahm	Tony Brake
DETAILS	Tom Dang	Edward Nahm
QUANTITIES	Edward Nahm	Tony Brake

STATE OF CALIFORNIA
DEPARTMENT OF TRANSPORTATION

DIVISION OF MAINTENANCE
STRUCTURE MAINTENANCE DESIGN

BRIDGE NO. 53-1433
POST MILE R19.17

BLOOMFIELD AVENUE OC
MISCELLANEOUS DETAILS NO. 1

STRUCTURES MAINTENANCE DETAIL SHEET (ENGLISH) (REV. 09-01-10)

ORIGINAL SCALE IN INCHES FOR REDUCED PLANS 0 1 2 3

UNIT: 3489
PROJECT NUMBER & PHASE: 0714000151-4
CONTRACT NO.: 07-306204

DISREGARD PRINTS BEARING EARLIER REVISION DATES

REVISION DATES: 2-20-15 3-18-15 3-20-15 3-23-15

SHEET 02 OF 07

FILE => 53-1433-b-miscdt101.dgn

USERNAME => s125624 DATE PLOTTED => 21-SEP-2015 TIME PLOTTED => 10:32

DIST	COUNTY	ROUTE	POST MILES TOTAL PROJECT	SHEET No.	TOTAL SHEETS
07	LA	91	R11.3/R20.7	186	192

REGISTERED CIVIL ENGINEER 03/23/15 DATE

8-10-15
PLANS APPROVAL DATE

REGISTERED PROFESSIONAL ENGINEER EDWARD J. NAHM No. C66900 Exp. 09/30/16 CIVIL STATE OF CALIFORNIA

The State of California or its officers or agents shall not be responsible for the accuracy or completeness of electronic copies of this plan sheet.

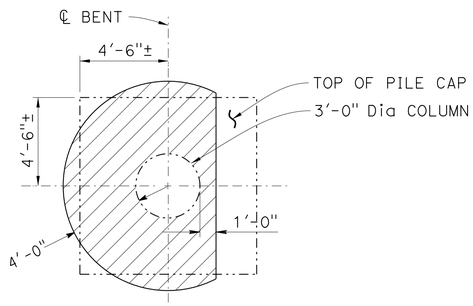

EXCAVATION

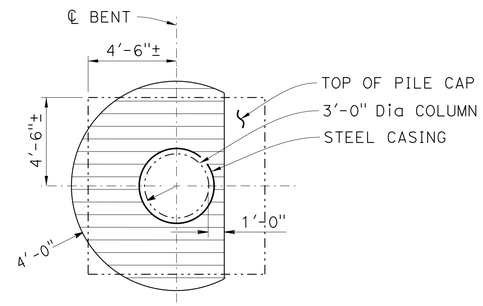

BACKFILL

LEGEND:

Indicates existing.

Indicates new construction.

Indicates limits of structure excavation (Type Z-2) (Aerially Deposited Lead).

Indicates limits of structure backfill.

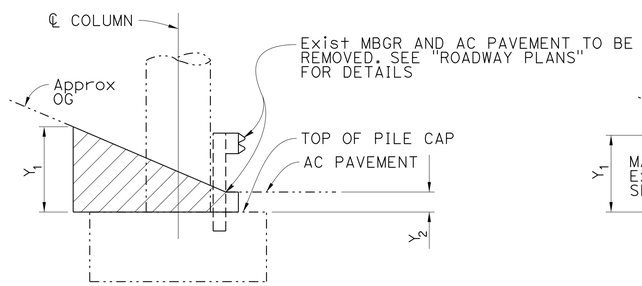

EXCAVATION

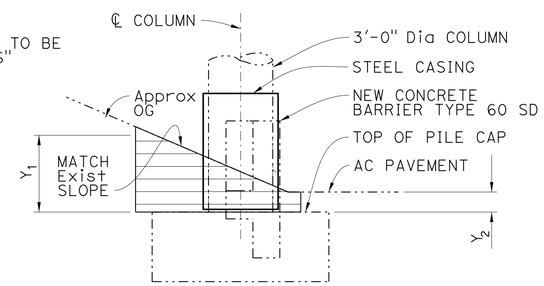

BACKFILL

EXCAVATION AND BACKFILL LIMITS TABLE		
LOCATION	DEPTH (FT)	
	Y_1	Y_2
BENT 2	6	4
BENT 4	8	5

LIMITS OF EXCAVATION AND BACKFILL

NO SCALE

NOTE:
THE CONTRACTOR MUST VERIFY ALL CONTROLLING FIELD DIMENSIONS BEFORE ORDERING OR FABRICATING ANY MATERIAL. EXISTING UTILITY FACILITIES ARE NOT INCLUDED ON THESE PLANS.

	BY	CHECKED
DESIGN	Edward Nahm	Tony Brake
DETAILS	Tom Dang	Edward Nahm
QUANTITIES	Edward Nahm	Tony Brake

STATE OF CALIFORNIA
DEPARTMENT OF TRANSPORTATION

DIVISION OF MAINTENANCE
STRUCTURE MAINTENANCE DESIGN

BRIDGE NO. 53-1433
POST MILE R19.17

BLOOMFIELD AVENUE OC
MISCELLANEOUS DETAILS NO. 2

STRUCTURES MAINTENANCE DETAIL SHEET (ENGLISH) (REV. 09-01-10)

ORIGINAL SCALE IN INCHES FOR REDUCED PLANS 0 1 2 3

UNIT: 3489
PROJECT NUMBER & PHASE: 0714000151-4
CONTRACT NO.: 07-306204

DISREGARD PRINTS BEARING EARLIER REVISION DATES

REVISION DATES: 2-20-15 3-23-15

SHEET 03 OF 07

FILE => 53-1433-b-miscdt102.dgn

USERNAME => s125624 DATE PLOTTED => 21-SEP-2015 TIME PLOTTED => 10:32

DIST	COUNTY	ROUTE	POST MILES TOTAL PROJECT	SHEET No.	TOTAL SHEETS
07	LA	91	R11.3/R20.7	187	192

REGISTERED CIVIL ENGINEER 03/23/15 DATE

8-10-15
PLANS APPROVAL DATE

REGISTERED PROFESSIONAL ENGINEER EDWARD J. NAHM No. C66900 Exp. 09/30/16 CIVIL STATE OF CALIFORNIA

The State of California or its officers or agents shall not be responsible for the accuracy or completeness of electronic copies of this plan sheet.

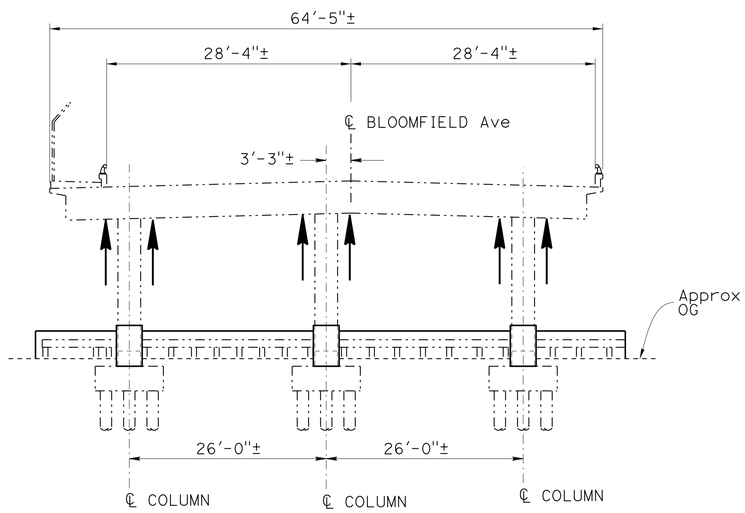

CROSS SECTION (CONCEPTUAL)

NO SCALE

LEGEND:

-·-·-·- Indicates existing.

——— Indicates new construction.

↑ Indicates suggested location of Temporary Structure Supports. Load location as determined by Temporary Support Design.

NOTES:

1. The jacking force shall be applied to all jacks. simultaneously per column designation location.
2. The temporary support shall be jacked to provide a snug fit with the bridge soffit.
3. Temporary Support Table force indicates total shoring load of a set of 3 supports as indicated in CROSS SECTION (CONCEPTUAL).
4. Initial jacking loads are estimated forces that should be applied to the structure at jacking points before demolition to achieve a zero load condition in the columns.
5. Jacking loads must be transferred evenly with load path to and throughout all existing girders and diaphragms in CIP concrete box girder.

TEMPORARY SUPPORT TABLE

SERVICE LOAD	MINIMUM TEMPORARY SUPPORT DESIGN LOAD PER BENT	MINIMUM TEMPORARY SUPPORT DESIGN LOAD PER COLUMN	INITIAL JACKING LOAD PER COLUMN
DL (Kips)	900	300	150
DL+LL (Kips)	1260	420	210
LATERAL LOAD (Kips)	18	6	3

NOTE:
THE CONTRACTOR MUST VERIFY ALL CONTROLLING FIELD DIMENSIONS BEFORE ORDERING OR FABRICATING ANY MATERIAL. EXISTING UTILITY FACILITIES ARE NOT INCLUDED ON THESE PLANS.

	BY	CHECKED
DESIGN	Edward Nahm	Tony Brake
DETAILS	Tom Dang	Edward Nahm
QUANTITIES	Edward Nahm	Tony Brake

STATE OF CALIFORNIA DEPARTMENT OF TRANSPORTATION

DIVISION OF MAINTENANCE STRUCTURE MAINTENANCE DESIGN

BRIDGE NO. 53-1433
POST MILE R19.17

BLOOMFIELD AVENUE OC
TEMPORARY SUPPORT DETAILS

STRUCTURES MAINTENANCE DETAIL SHEET (ENGLISH) (REV. 09-01-10)

ORIGINAL SCALE IN INCHES FOR REDUCED PLANS 0 1 2 3

UNIT: 3489
PROJECT NUMBER & PHASE: 0714000151-4
CONTRACT NO.: 07-306204

DISREGARD PRINTS BEARING EARLIER REVISION DATES

REVISION DATES: 2-20-15 3-23-15

SHEET 04 OF 07

FILE => 53-1433-c-tempsupdtl.dgn

USERNAME => s125624 DATE PLOTTED => 21-SEP-2015 TIME PLOTTED => 10:32

DIST	COUNTY	ROUTE	POST MILES TOTAL PROJECT	SHEET No.	TOTAL SHEETS
07	LA	91	R11.3/R20.7	188	192

REGISTERED CIVIL ENGINEER 03/23/15 DATE

8-10-15
PLANS APPROVAL DATE

REGISTERED PROFESSIONAL ENGINEER EDWARD J. NAHM No. C66900 Exp. 09/30/16 CIVIL STATE OF CALIFORNIA

The State of California or its officers or agents shall not be responsible for the accuracy or completeness of electronic copies of this plan sheet.

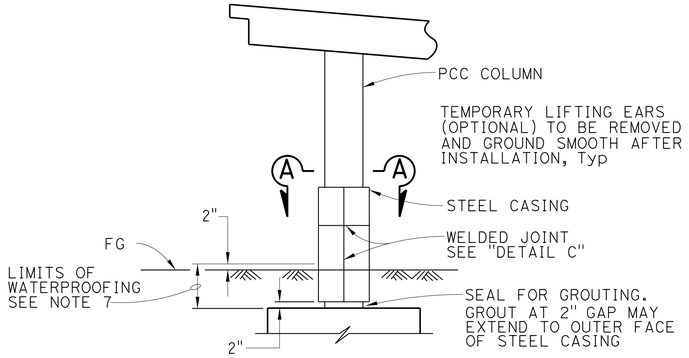

1 CLASS F COLUMN

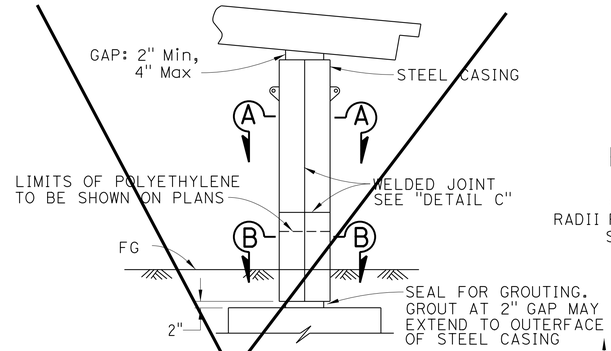

CLASS P/F COLUMN

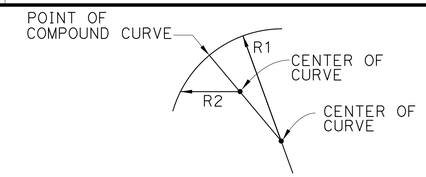

ELLIPTICAL CASING DETAIL
CLASS F AND P/F COLUMN

RADII R1 AND R2 TO BE DETERMINED BY THE CONTRACTOR SUBJECT TO THE APPROVAL OF THE ENGINEER

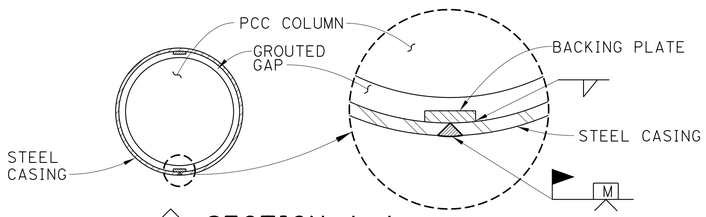

1 SECTION A-A

MINIMUM INSIDE DIAMETER OF STEEL CASING = 2½"
GREATER THAN NOMINAL COLUMN DIAMETER

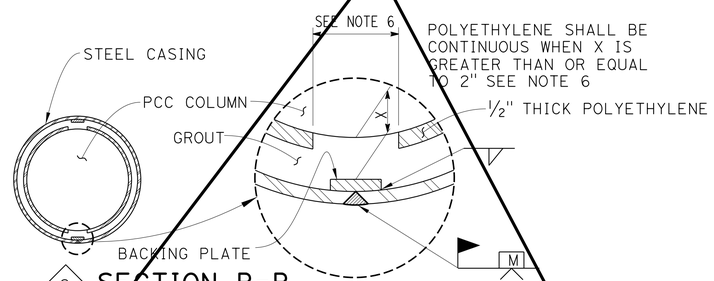

2 SECTION B-B

MINIMUM INSIDE DIAMETER OF STEEL CASING = 2½"
GREATER THAN NOMINAL COLUMN DIAMETER FOR CLASS P/F

ROUND COLUMN

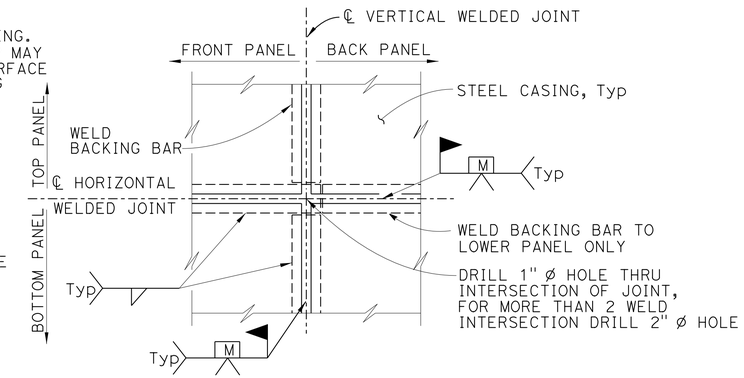

(TWO WELD INTERSECTION JOINT)

DETAIL C

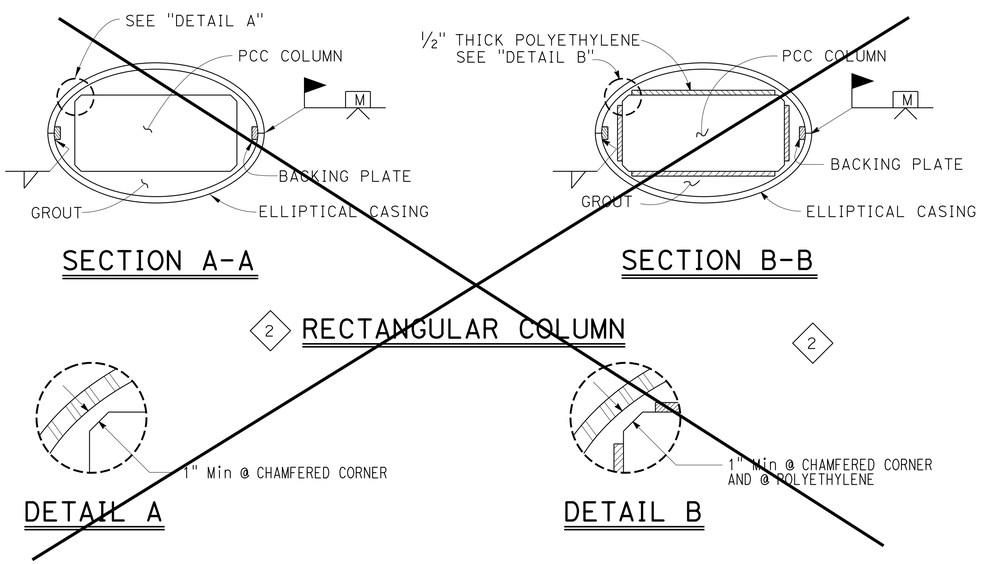

SECTION A-A

SECTION B-B

2 RECTANGULAR COLUMN

DETAIL A

DETAIL B

2

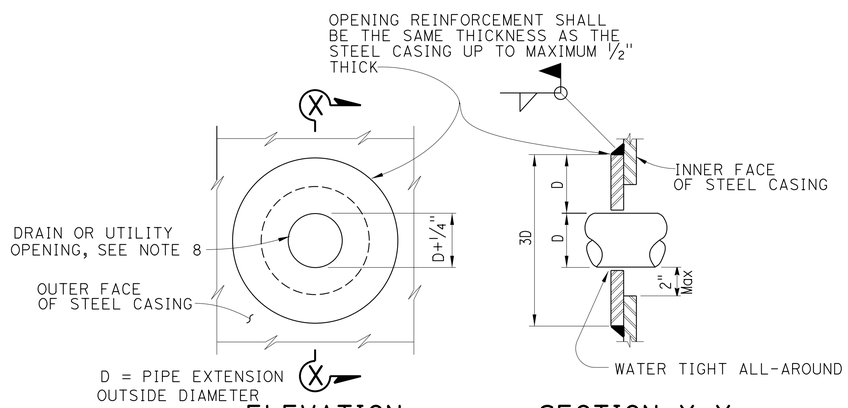

ELEVATION

SECTION X-X

CASING OPENING

NOTE: OPENING REINFORCEMENT REQUIRED FOR DRAIN OR UTILITY OPENINGS LARGER THAN 4"

NOTES:

1. For varying thickness, steel casing inside surface to remain flush. Minimum clearance from PCC column to casing shall be maintained
2. Appropriate injection nozzles to be provided on casing, but removed and ground flush following completion of grouting operation
3. All voids between steel casing and polyethylene (Class P/F), and steel casing and PCC column (Class F) to be filled with grout
4. Location and number of vertical and horizontal welds to be determined by the Contractor and subject to the approval of the Engineer. The location of casing welds are for illustration. No skip welds allowed
5. Circular steel casing to be ¼" thick minimum for casings with a 4'-4" diameter or less; all other steel casings to be ⅜" thick unless noted differently on contract plans. Backing plates to be the same thickness as casing up to maximum ⅜" thick
6. Contractor shall remove 12" polyethylene strip behind backing plate if backing plate is closer than 2" from face of column
7. Waterproof limits for steel casings. Typical for Class "F" and "P/F"
8. For pipe extensions, opening shall be no more than ¼" greater than the pipe extension diameter. For other openings, the opening diameter to be determined by the Engineer

NO SCALE

SPECIAL DETAILS

REVISED STANDARD DRAWING

FILE NO. xs7-010

APPROVAL DATE July 2014

1 REVISED DETAILS
2 DELETED DETAILS

NOTE:
THE CONTRACTOR MUST VERIFY ALL CONTROLLING FIELD DIMENSIONS BEFORE ORDERING OR FABRICATING ANY MATERIAL. EXISTING UTILITY FACILITIES ARE NOT INCLUDED ON THESE PLANS.

STATE OF CALIFORNIA
DEPARTMENT OF TRANSPORTATION

DIVISION OF ENGINEERING SERVICES

BRIDGE NO. 53-1433
POST MILE R19.17

BLOOMFIELD AVENUE OC
COLUMN CASING - STEEL

DS OSD 2147A (ENGLISH STANDARD DRAWING "XS" BORDER REV. (02-02-11)

ORIGINAL SCALE IN INCHES FOR REDUCED PLANS 0 1 2 3

UNIT: 3489
PROJECT NUMBER & PHASE: 0714000151-4
CONTRACT NO.: 07-306204

DISREGARD PRINTS BEARING EARLIER REVISION DATES

REVISION DATES: 2-20-15 3-23-15

SHEET 05 OF 07

FILE => 53-1433-d-colcasing.dgn

USERNAME => s125624 DATE PLOTTED => 21-SEP-2015 TIME PLOTTED => 10:32

DIST	COUNTY	ROUTE	POST MILES TOTAL PROJECT	SHEET No.	TOTAL SHEETS
07	LA	91	R11.3/R20.7	189	192

REGISTERED CIVIL ENGINEER 06/10/15 DATE

8-10-15
PLANS APPROVAL DATE

REGISTERED PROFESSIONAL ENGINEER EDWARD J. NAHM No. C66900 Exp. 09/30/16 CIVIL STATE OF CALIFORNIA

The State of California or its officers or agents shall not be responsible for the accuracy or completeness of electronic copies of this plan sheet.

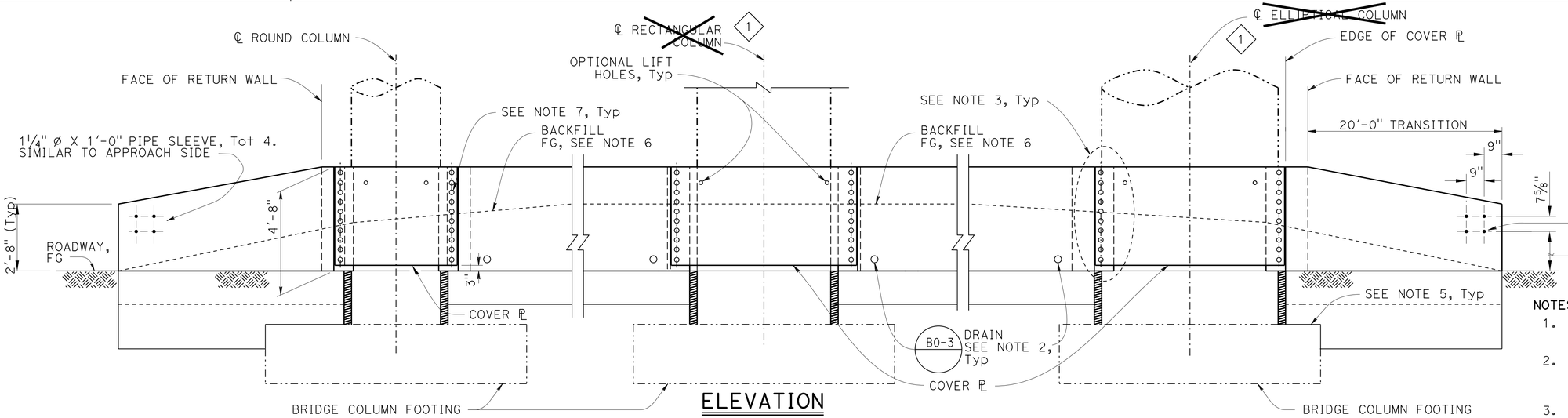

ELEVATION
NO SCALE

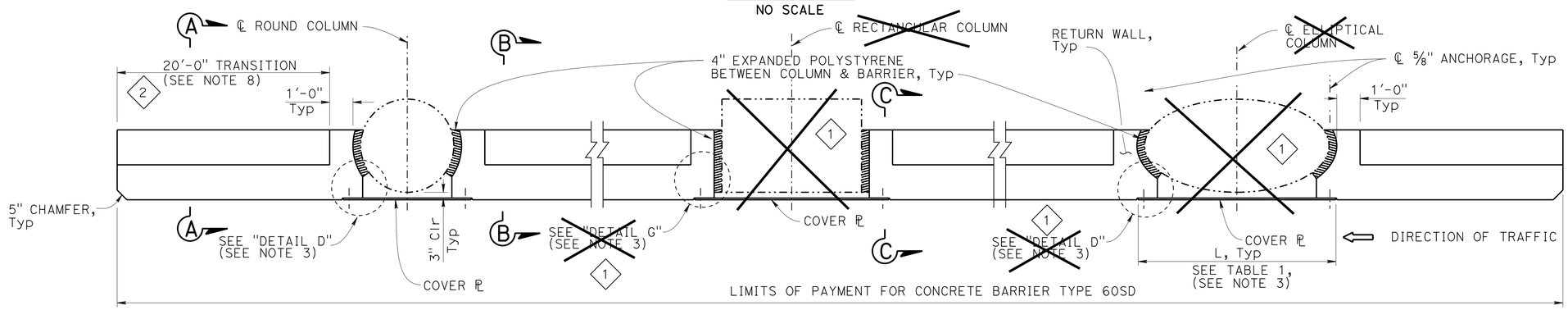

PLAN
NO SCALE

NOTES:

1. See "ROADWAY PLANS" for exact alignment of barrier.
2. 4" ø drains at 9'-0" center to center see "Details No. 2" for proper drainage and gutter details.
3. For "Detail D", "Detail E", "Detail F", "Detail G", "Table 1", "Alternative Anchorage" and "Backfill detaisl, see "CONCRETE BARRIER TYPE 60SD-TRANSITION AT BRIDGE COLUMN-DETAILS No. 2" sheet.
4. Maintain 4" (Min) gap to existing Structure.
5. Where existing bridge footing is encountered, apply bond breaker between bridge footing and new structure.
6. Slope backfill to drain any surface water.
7. All plates & connections must be galvanized.
8. ~~Details are similar for Hexagonal Columns.~~ (1)
8. Use dimensions as follows at Westbound departure only. For details, see PART PLAN (END TRANSITION AT WB DEPARTURE). (2)

TRANSITION CONCRETE BARRIER	
LENGTH	10'-0"
FOOTING DEPTH	3'-0"

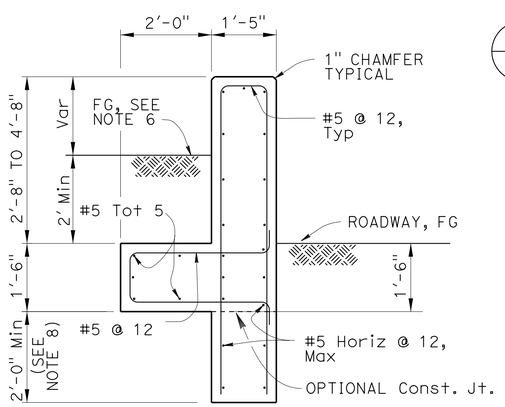

SECTION A-A
NO SCALE

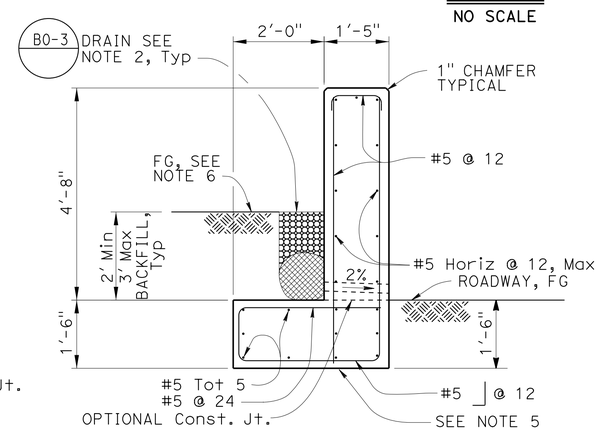

SECTION B-B
NO SCALE

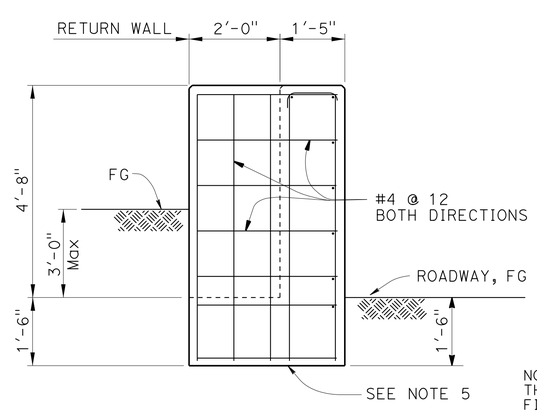

SECTION C-C
NO SCALE

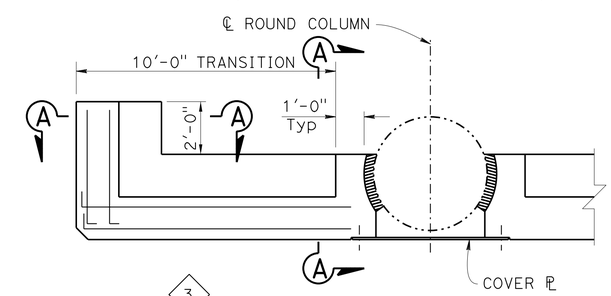

PART PLAN (END TRANSITION AT WB DEPARTURE)
(90 DEGREE HOOK REQUIRED AT THE CORNER REINFORCEMENT)

NOTE:
THE CONTRACTOR MUST VERIFY ALL CONTROLLING FIELD DIMENSIONS BEFORE ORDERING OR FABRICATING ANY MATERIAL. EXISTING UTILITY FACILITIES ARE NOT INCLUDED ON THESE PLANS.

SPECIAL DETAILS

NO SCALE

BLOOMFIELD AVENUE OC

CONCRETE BARRIER TYPE 60SD

TRANSITION AT BRIDGE COLUMN-DETAILS No. 1

REVISED STANDARD DRAWING

FILE NO. xs16-092-1

APPROVAL DATE October 2014

(1) DELETED DETAILS (2) REVISED DETAILS (3) ADDED DETAILS

CALIFORNIA DEPARTMENT OF TRANSPORTATION

DIVISION OF ENGINEERING SERVICES

BRIDGE NO. 53-1433

POST MILE R19.17

DS OSD 2147A (ENGLISH STANDARD DRAWING "XS" BORDER REV. (02-02-11)

ORIGINAL SCALE IN INCHES FOR REDUCED PLANS 0 1 2 3

UNIT: 3489
PROJECT NUMBER & PHASE: 0714000151-4
CONTRACT NO.:07-306204

DISREGARD PRINTS BEARING EARLIER REVISION DATES

REVISION DATES 6-10-15 10-2-14 3-20-15 3-20-15

SHEET 06 OF 07

FILE => 53-1433-e-concbar60sd01.dgn

USERNAME => s125624 DATE PLOTTED => 21-SEP-2015 TIME PLOTTED => 10:32

DIST	COUNTY	ROUTE	POST MILES TOTAL PROJECT	SHEET No.	TOTAL SHEETS
07	LA	91	R11.3/R20.7	190	192

REGISTERED CIVIL ENGINEER 03/23/15 DATE

8-10-15
PLANS APPROVAL DATE

REGISTERED PROFESSIONAL ENGINEER EDWARD J. NAHM No. C66900 Exp. 09/30/16 CIVIL STATE OF CALIFORNIA

The State of California or its officers or agents shall not be responsible for the accuracy or completeness of electronic copies of this plan sheet.

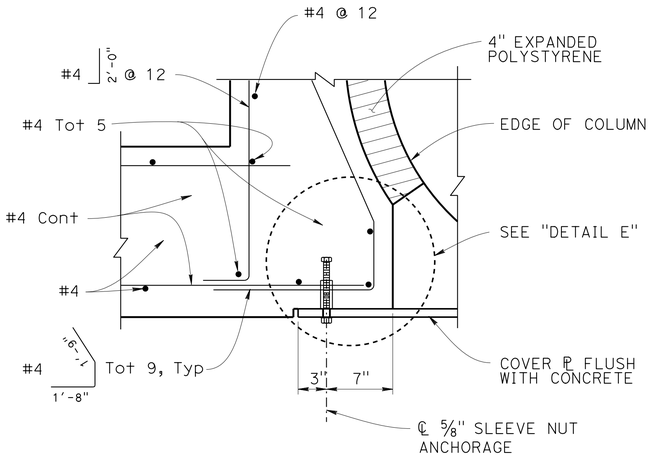

DETAIL D
1½" = 1'-0"

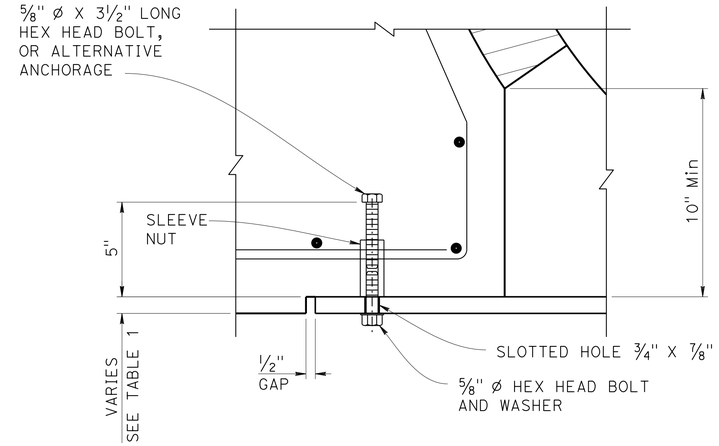

DETAIL E
3" = 1'-0"

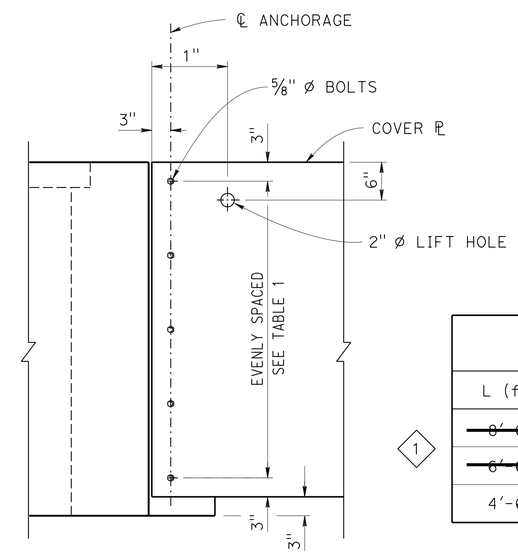

DETAIL F
NO SCALE

1

TABLE 1		
L (ft)	PLATE THICKNESS (in)	TOTAL No. OF BOLTS
~~8'-6" Max~~	~~⅞~~	~~10~~
~~6'-6" Max~~	~~11/16~~	~~7~~
4'-6" Max	7/16	5

NOTE:
Structural steel, fy = 50,000 psi
Unless otherwise noted.

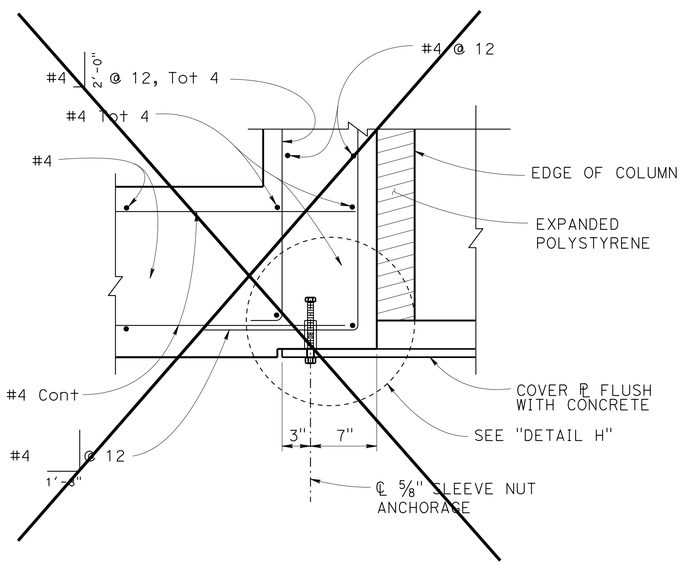

1 DETAIL G
1½" = 1'-0"

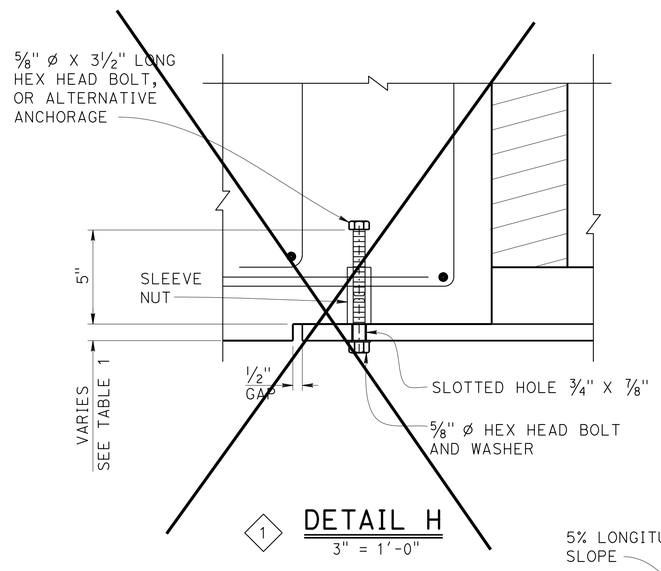

1 DETAIL H
3" = 1'-0"

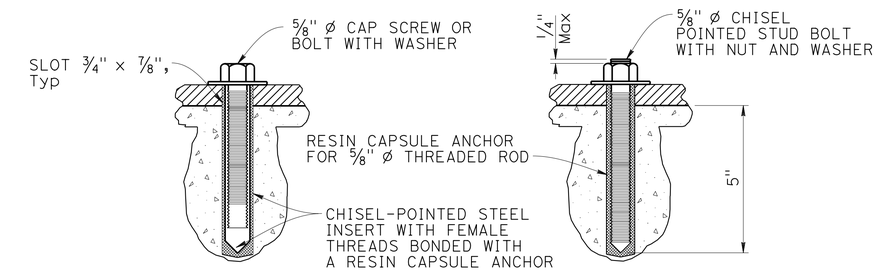

ALTERNATIVE A ALTERNATIVE B

ALTERNATIVE ANCHORAGE
NO SCALE

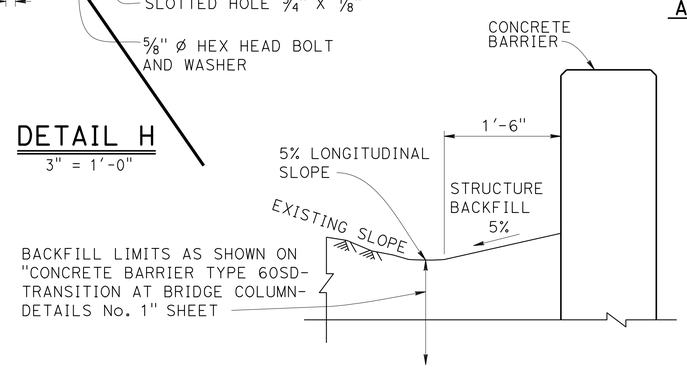

BACKFILL DETAIL
NO SCALE

STANDARD DRAWING
FILE NO. xs16-092-2
APPROVAL DATE October 2014

1 DELETED DETAILS

NOTE:
THE CONTRACTOR MUST VERIFY ALL CONTROLLING FIELD DIMENSIONS BEFORE ORDERING OR FABRICATING ANY MATERIAL. EXISTING UTILITY FACILITIES ARE NOT INCLUDED ON THESE PLANS.

CALIFORNIA
DEPARTMENT OF TRANSPORTATION

DIVISION OF ENGINEERING SERVICES

BRIDGE NO. 53-1433
POST MILE R19.17

BLOOMFIELD AVENUE OC
CONCRETE BARRIER TYPE 60SD
TRANSITION AT BRIDGE COLUMN-DETAILS No. 2

DS OSD 2147A (ENGLISH STANDARD DRAWING "XS" BORDER REV. (02-02-11)

ORIGINAL SCALE IN INCHES FOR REDUCED PLANS 0 1 2 3

UNIT: 3489
PROJECT NUMBER & PHASE: 0714000151-4
CONTRACT NO.: 07-306204

DISREGARD PRINTS BEARING EARLIER REVISION DATES

REVISION DATES: ~~9-18-14~~ ~~9-30-14~~ ~~3-20-15~~ 3-23-15

SHEET 07 OF 07

FILE => 53-1433-e-concbar60sd02.dgn

USERNAME => s125624 DATE PLOTTED => 21-SEP-2015 TIME PLOTTED => 9:32

DIST	COUNTY	ROUTE	POST MILES TOTAL PROJECT	SHEET No.	TOTAL SHEETS
07	LA	91	R11.3/R20.7	191	192

Ulysses N. Smpardos 3-19-15
REGISTERED CIVIL ENGINEER DATE

8-10-15
PLANS APPROVAL DATE

REGISTERED PROFESSIONAL ENGINEER Ulysses N. Smpardos No. 61018 Exp. 12-31-16 CIVIL STATE OF CALIFORNIA

The State of California or its officers or agents shall not be responsible for the accuracy or completeness of scanned copies of this plan sheet.

INDEX TO PLANS

SHEET NO.	TITLE
1	GENERAL PLAN
2	STRUCTURE APPROACH TYPE R(30D)

STANDARD PLANS 2010

	A10A	ABBREVIATIONS (SHEET 1 OF 2)
RSP	A10B	ABBREVIATIONS (SHEET 2 OF 2)
	B6-21	JOINT SEALS (MAXIMUM MOVEMENT RATING = 2")
	RSP P10	CONCRETE PAVEMENT DOWEL BAR DETAILS

STANDARD PLAN SHEET No.

DETAIL No.

GENERAL NOTES

DESIGN:
AASHTO LRFD BRIDGE DESIGN SPECIFICATIONS, 4th Edition and California Amendments, dated November, 2011

LIVE LOADING:
HL 93 and permit design load.

REINFORCED CONCRETE:
fy = 60 ksi (Yield Strength of Reinforcement)
f'c = 3.6 ksi (Compressive Strength at 28 days)

JOINT SEAL TABLE

LOCATION	MINIMUM "MR" (in)	APPROXIMATE LENGTH (ft)	EXISTING WATERSTOP	APPROXIMATE DEPTH TO CLEAN EXP JOINT (in)	APPROXIMATE LENGTH TO CLEAN EXP JOINT (ft)	PAVING NOTCH EXTENSION REQUIRED
Abut 1 (EB) PAVING NOTCH	½	87	NO	12	36	YES
Abut 1 (WB) PAVING NOTCH	½	75	NO	12	15	YES
Abut 4 (EB) PAVING NOTCH	½	87	NO	12	35	YES
Abut 4 (WB) PAVING NOTCH	½	75	NO	12	15	YES

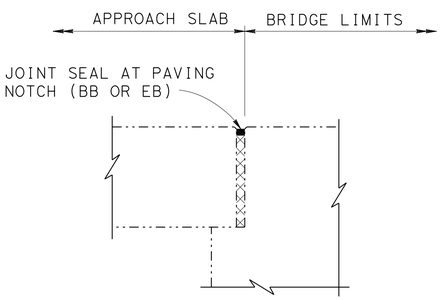

DIAPHRAGM ABUTMENT

NO SCALE

LEGEND:

- Indicates Existing Structure
- Indicates Location and Limits of Type R(30D) Structure Approach / Departure Slab, and Removal of unreinforced PCC Pavement.
- Indicates Location and Limits of Type R(30D) Structure Approach / Departure Slab, and Removal of AC Pavement.
- Indicates Location of Existing Joint Seal Removal and Placement of New Joint Seal. (B6-21)
- ± Indicates Dependant Dimensions (Dimensions which are Controlled or Constrained by Field Dimensions.)
- * Indicates Limits to Clean Expansion Joint
- ** Indicates Limits to Paving Notch Extension

NOTE:
THE CONTRACTOR MUST VERIFY ALL CONTROLLING FIELD DIMENSIONS BEFORE ORDERING OR FABRICATING ANY MATERIAL.

QUANTITIES

AGGREGATE BASE (APPROACH SLAB)	25	CY
STRUCTURAL CONCRETE, APPROACH SLAB (TYPE R)	248	CY
PAVING NOTCH EXTENSION	168	CF
CLEAN EXPANSION JOINT	101	LF
JOINT SEAL (MR ½")	324	LF

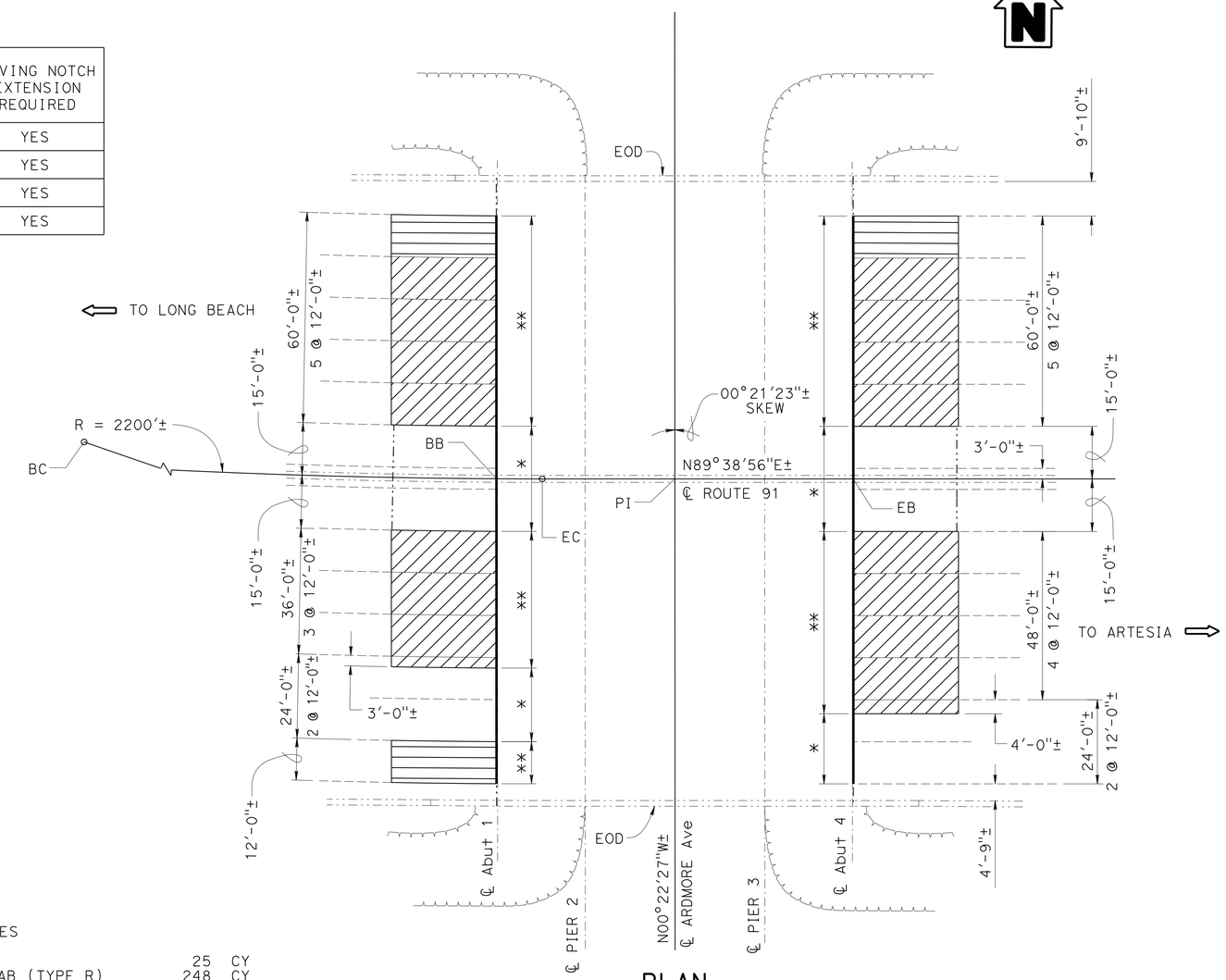

PLAN
1" = 20'-0"

ARDMORE AVENUE UNDERCROSSING

Jose Higareda DESIGN ENGINEER	DESIGN	BY Suzan Moradi	CHECKED Ulysses Smpardos	LOAD & RESISTANCE FACTOR DESIGN	LIVE LOADING: HL93 W/"LOW-BOY": PERMIT DESIGN VEHICLE
	DETAILS	BY Herman Mauroschadt	CHECKED Ulysses Smpardos	LAYOUT: BY Suzan Moradi	CHECKED Ulysses Smpardos
	QUANTITIES	BY Suzan Moradi	CHECKED Traci Menard	SPECIFICATIONS: BY Theresa Nedwick	PLANS AND SPECS COMPARED Theresa Nedwick

ORIGINAL SCALE IN INCHES FOR REDUCED PLANS 0 1 2 3

STATE OF CALIFORNIA
DEPARTMENT OF TRANSPORTATION

DIVISION OF ENGINEERING SERVICES
STRUCTURE DESIGN
DESIGN BRANCH 15

BRIDGE NO. 53-1757
POST MILE R015.39

LA 91 PAVEMENT REHAB
GENERAL PLAN

UNIT: 3604
PROJECT NUMBER & PHASE: 0714000151
CONTRACT NO.: 07-30620

DISREGARD PRINTS BEARING EARLIER REVISION DATES

REVISION DATES 8-11-14 5-18-15 2-11-15 2-26-15

SHEET 1 OF 2

USERNAME => s128624 DATE PLOTTED => 21-SEP-2015 TIME PLOTTED => 10:32

STRUCTURES DESIGN GENERAL PLAN SHEET (ENGLISH) (REV.09-01-10)

FILE => 53-1757-b-gp.dgn

DIST	COUNTY	ROUTE	POST MILES TOTAL PROJECT	SHEET No.	TOTAL SHEETS
07	LA	91	R11.3/R20.7	192	192

Ulysses N. Smpardos 3-19-15
REGISTERED CIVIL ENGINEER DATE

8-10-15
PLANS APPROVAL DATE

REGISTERED PROFESSIONAL ENGINEER Ulysses N. Smpardos No. 61018 Exp. 12-31-16 CIVIL STATE OF CALIFORNIA

The State of California or its officers or agents shall not be responsible for the accuracy or completeness of electronic copies of this plan sheet.

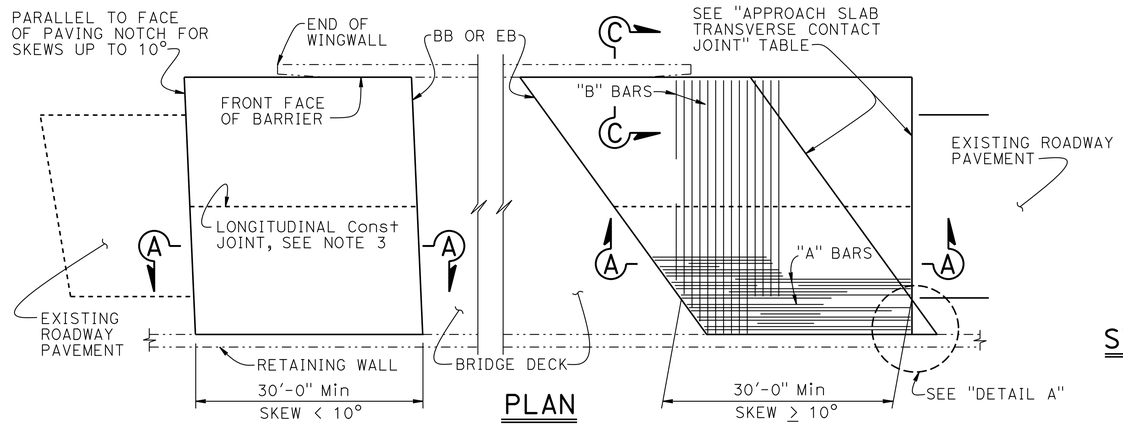

PLAN
1" = 10'

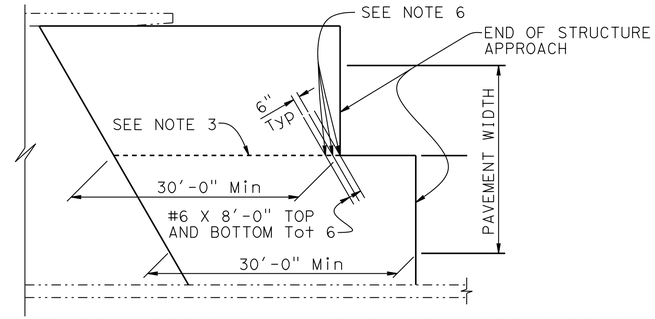

STRUCTURE APPROACH - END STAGGER DETAIL
NO SCALE

APPROACH SLAB TRANSVERSE CONTACT JOINT		
APPROACH SKEW	WITH AC ROADWAY PAVEMENT	WITH PCC ROADWAY PAVEMENT
< 10°	PARALLEL TO FACE OF PN	PARALLEL TO FACE OF PAVING NOTCH
10° - 45°	PARALLEL TO FACE OF PN USE "DETAIL A"	STAGGER LINES 24' TO 36' APART
> 45°	PARALLEL TO FACE OF PN USE "DETAIL A"	STAGGER AT EACH LANE LINE

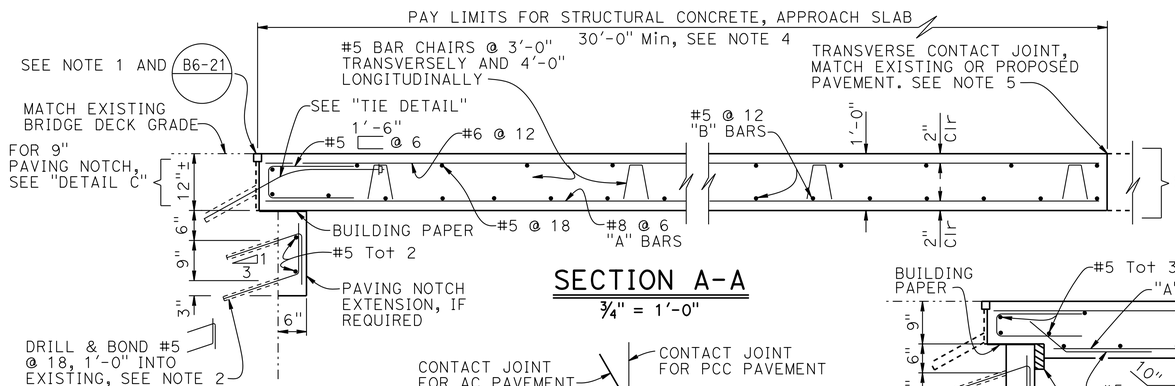

SECTION A-A
¾" = 1'-0"

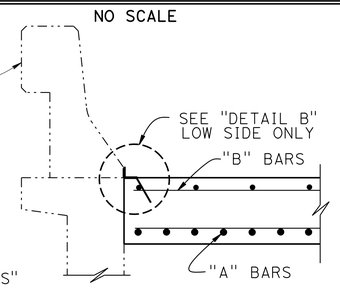

SECTION C-C
¾" = 1'-0"

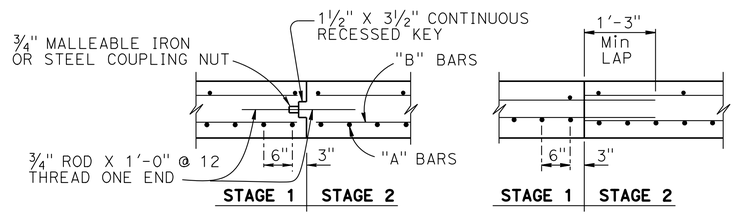

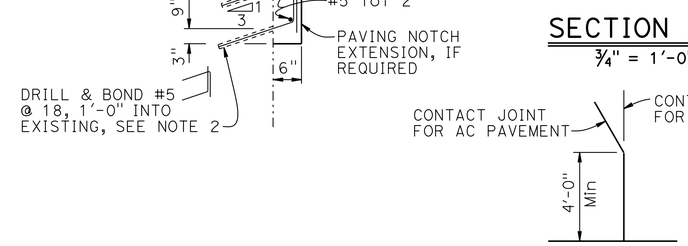

DETAIL A
No Scale

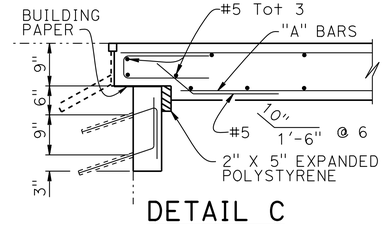

DETAIL C
¾" = 1'-0"

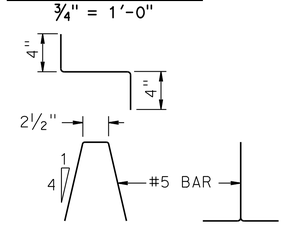

BAR CHAIR DETAIL
1½" = 1'-0"

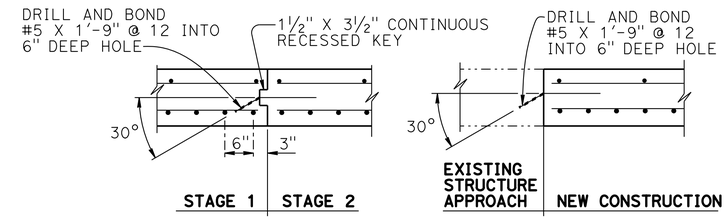

LONGITUDINAL CONSTRUCTION JOINT ALTERNATIVES
¾" = 1'-0"

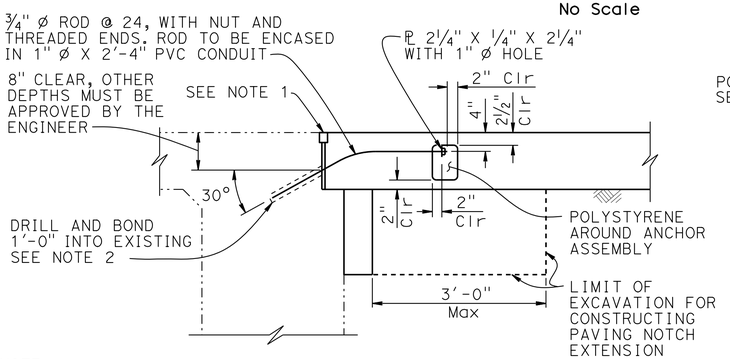

NOTE:
THE CONTRACTOR MUST VERIFY ALL CONTROLLING FIELD DIMENSIONS BEFORE ORDERING OR FABRICATING ANY MATERIAL.

TIE DETAIL
¾" = 1'-0"

NOTE: For details not shown, see "SECTION A-A"

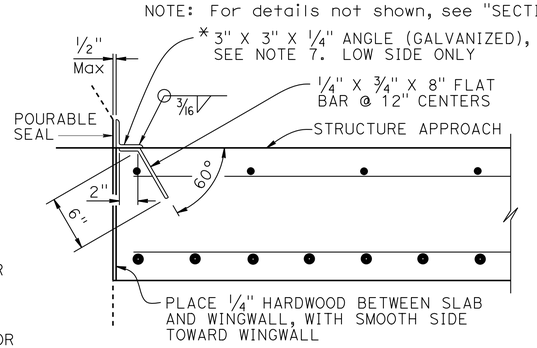

*(TO BE USED WITH CONCRETE BARRIER WITH VERTICAL FACE)

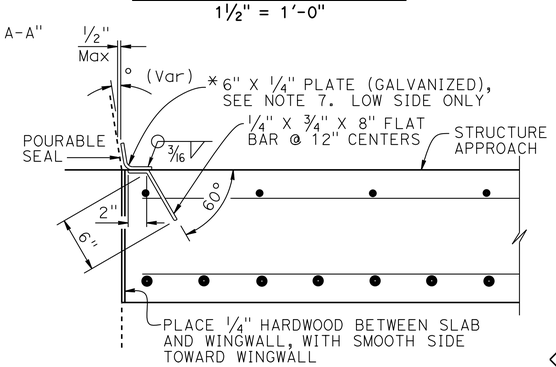

*(TO BE USED WITH CONCRETE BARRIER WITH SLOPING FACE)

DETAIL B
1½" = 1'-0"

NOTES:
1. For details not shown or noted, see Structure Plans. Adjust bar reinforcement to clear a sawcut for sealed joint, when required
2. Space to avoid existing prestress anchorages and main reinforcement
3. Longitudinal construction joints, when permitted by the Engineer, shall be located on lane lines
4. Transverse contact joint shall be a minimum of 5'-0" from an existing or constructed weakened plane joint
5. (1) For transverse contact joint with new PCC paving, refer to Revised Standard Plan RSP P10
6. Couplers are required for stage construction
7. End angle or plate at beginning of barrier transition, end of wingwall or end of structure approach as applicable

SPECIAL DETAILS

REVISED STANDARD DRAWING
FILE NO. xs3-150
APPROVAL DATE July 2011

(1) MODIFIED NOTE

STATE OF CALIFORNIA
DEPARTMENT OF TRANSPORTATION

DIVISION OF ENGINEERING SERVICES

BRIDGE NO. 53-1757
POST MILE R015.39

LA 91 PAVEMENT REHAB
STRUCTURE APPROACH TYPE R(30D)

DS OSD 2147A (ENGLISH STANDARD DRAWING "XS" BORDER REV. (02-02-11)

ORIGINAL SCALE IN INCHES FOR REDUCED PLANS 0 1 2 3

UNIT: 3604
PROJECT NUMBER & PHASE: 0714000151
CONTRACT NO.: 07-30620

DISREGARD PRINTS BEARING EARLIER REVISION DATES
REVISION DATES 8-18-14 1-7-15 2-5-15 3-18-15
SHEET 2 OF 2

FILE => 53-1757-c-xs3-150.dgn

USERNAME => s125624 DATE PLOTTED => 21-SEP-2015 TIME PLOTTED => 10:32