INFORMATION HANDOUT

For Contract No. 07-306204
At 07-LA-91-R11.3/R20.7

Identified by
Project ID 0714000151
MATERIALS INFORMATION

AERIALLY DEPOSITED LEAD SITE INVESTIGATION REPORT

CRASH CUSHION (SCI 100GM) DESIGN AND INSTALLATION MANUAL

FIBER OPTIC AS-BUILT DRAWINGS

AERIALLY DEPOSITED LEAD SITE INVESTIGATION REPORT

ADL INVESTIGATION FOR ADA CURB RAMP RECONSTRUCTION PROJECT AT VARIOUS LOCATIONS AT ON/OFF-RAMPS BETWEEN SR710 AND ORANGE COUNTY LINE IN LOS ANGELES COUNTY, CALIFORNIA
LOCATION: LA-91- PM R11.32 to R20.74

PROJECT NUMBER: 0714000151-1
EA NUMBER: 306201
CONTRACT NO. 07A3321
TASK ORDER NO. 16

STANTEC PROJECT NO.: 185831016

Submitted to:

California Department of Transportation, District 7
100 South Main Street
Los Angeles, California 90012

Submitted by:

Stantec Consulting Services Inc.
25864-F Business Center Drive
Redlands, California 92374

December 21, 2014

TABLES

TABLE 1
SUMMARY OF SOIL ANALYTICAL RESULTS-LEAD and pH
ADL SITE INVESTIGATION
LA-91- PM R11.32/R20.74
LOS ANGELES COUNTY, CALIFORNIA
PN: 0714000151-1; EA#306201
TASK ORDER #16; CONTRACT 07A3321

Ramp Number	Sample ID	Total Lead [1] (mg/kg)	Validation Qualifier	Soluble Lead [1] Cal WET-Citric (mg/L)	Validation Qualifier	Soluble Lead [1] Cal WET-DI (mg/L)	Validation Qualifier	Soluble Lead [1] TCLP (mg/L)	Validation Qualifier	pH [2]
50 (See Figure 13)	1263-101-0	32		--		--		--		--
	1263-101-2	39		1.8		--		--		--
	1263-102-0	46		1.5		--		--		--
	1263-102-2	30		--		--		--		--
	1263-103-0	180		12		0.83	UJB	0.28		--
	1263-103-2	19		--		--		--		--
	1263-104-0	71		6.9		0.83	UJB	--		--
	1263-104-2	6.7		--		--		--		--
46 (See Figure 11)	1263-105-0	17		--		--		--		--
	1263-105-2	13		--		--		--		--
	1263-106-0	50		2.5		--		--		--
	1263-106-2	17		--		--		--		--
	1263-107-0	190		15		0.83	UJB	0.16		--
	1263-107-2	7.6		--		--		--		--
	1263-108-0*	74		3.4		<0.027		--		--
	1263-108-2	14		--		--		--		--
39 (See Figure 10)	1263-109-0	100		5.8		<0.027		--		--
	1263-109-2	10		--		--		--		--
	1263-110-0	170		8.7		0.83	UJB	0.043	NJ	--
	1263-110-2	9.2		--		--		--		--
	1263-111-0	280		20		<0.027		0.15		6.8
	1263-111-2	18		--		--		--		--
	1263-112-0	210		20		0.83	UJB	0.33		--
	1263-112-2	7.3		--		--		--		--
19 (See Figure 9)	1263-113-0	400		19	J	<0.027		0.20		7.6
	1263-113-2	61		4.3		--		--		--
	1263-114-0	120		6.7		<0.027		--		--
	1263-114-2	34		--		--		--		--
	1263-115-0	67		6.4		<0.027		--		--
	1263-115-2	17	J	--		--		--		--
	1263-116-0	180		3.6		--		0.13		--
	1263-116-2	13		--		--		--		--
18 (See Figure 9)	1263-117-0	130		12		<0.027		--		--
	1263-117-2	6.1		--		--		--		--
	1263-118-0	110		7.3		<0.027		--		--
	1263-118-2	7.5		--		--		--		--
	1263-119-0	140		6.7		<0.027		0.066		--
	1263-119-2	7.1		--		--		--		--
	1263-120-0	67		3.1		--		--		--
	1263-120-2	6.0		--		--		--		--
10 (See Figure 6)	1263-121-0	240		13		0.83	UJB	0.13		6.3
	1263-121-2	19		--		--		--		--
	1263-122-0	260		18		0.83	UJB	0.15		6.6
	1263-122-2	22		--		--		--		--
	1263-123-0	340		21		0.83	UJB	0.16		7.3
	1263-123-2	72		3.7		--		--		--
	1263-124-0	77		4.9		--		--		--
	1263-124-2	4.7		--		--		--		--
9 (See Figure 6)	1263-125-0	77		6.3		0.83	UJB	--		--
	1263-125-2	39		2.1		--		--		--
	1263-126-0	220		13		0.83	UJB	0.096		--
	1263-126-2	4.8		--		--		--		--
	1263-127-0	220		16		0.83	UJB	0.18		--
	1263-127-2	4.1		--		--		--		--
	1263-128-0	250		19	J	0.072	NJ	0.17		7.4
	1263-128-2	3.3		--		--		--		--
2 (See Figure 2)	1263-129-0	61		5.2		<0.027		--		--
	1263-129-2	15	J	--		--		--		--
	1263-130-0	420		25		<0.027		0.17		7.0
	1263-130-2	30		--		--		--		--
	1263-131-0	190		14		<0.027		0.060		--
	1263-131-2	22		--		--		--		--
	1263-132-0	230		14		<0.027		0.078		7.4
	1263-132-2	42		1.8		--		--		--
1 (See Figure 2)	1263-133-0	130		7.6		<0.027		--		--
	1263-133-2	7.7		--		--		--		--
	1263-134-0	150		7.5		<0.027		0.068		--
	1263-134-2	42		2.4		--		--		--
	1263-135-0	58		3.6		--		--		--
	1263-135-2	6.1		--		--		--		--
	1263-136-0	81		3.6		--		--		--
	1263-136-2	5.6		--		--		--		--

TABLE 1
SUMMARY OF SOIL ANALYTICAL RESULTS-LEAD and pH
ADL SITE INVESTIGATION
LA-91- PM R11.32/R20.74
LOS ANGELES COUNTY, CALIFORNIA
PN: 0714000151-1; EA#306201
TASK ORDER #16; CONTRACT 07A3321

Ramp Number	Sample ID	Total Lead [1] (mg/kg)	Validation Qualifier	Soluble Lead [1] Cal WET-Citric (mg/L)	Validation Qualifier	Soluble Lead [1] Cal WET-DI (mg/L)	Validation Qualifier	Soluble Lead [1] TCLP (mg/L)	Validation Qualifier	pH [2]
3 (See Figure 3)	1263-137-0	92		6.0		<0.027		--		--
	1263-137-2	23		--		--		--		--
	1263-138-0	320		9.3		<0.027		0.10	J	8.8
	1263-138-2	9.1		--		--		--		--
	1263-139-0	56		2.7		--		--		--
	1263-139-2	25		--		--		--		--
	1263-140-0	45		3.2		--		--		--
	1263-140-2	10		--		--		--		--
8 (See Figure 4)	1263-141-0	37		--		--		--		--
	1263-141-2	8.8		--		--		--		--
	1263-142-0	120		10		<0.027		--		--
	1263-142-2	4.5		--		--		--		--
	1263-143-0	73		3.8		--		--		--
	1263-143-2	5.3		--		--		--		--
	1263-144-0	200		7.9		<0.027		0.061		--
	1263-144-2	9.4		--		--		--		--
11 (See Figure 5)	1263-145-0	220		17		0.083	NJ	0.28		--
	1263-145-2	47		2.5		--		--		--
	1263-146-0	410		21		<0.027		0.15		7.4
	1263-146-2	11		--		--		--		--
	1263-147-0	330		22		0.054		0.31		7.4
	1263-147-2	24		--		--		--		--
	1263-148-0	460		27		<0.027		0.12		7.1
	1263-148-2*	64		3.0		<0.027		--		--
16 (See Figure 7)	1263-149-0	33		--		--		--		--
	1263-149-2	30		--		--		--		--
	1263-150-0	240		11		<0.027		0.20		7.7
	1263-150-2	13		--		--		--		--
	1263-151-0	190		11		<0.027		0.12		--
	1263-151-2	6.4		--		--		--		--
	1263-152-0	16		--		--		--		--
	1263-152-2	8.6		--		--		--		--
20 (See Figure 8)	1263-153-0	39		2.1		--		--		--
	1263-153-2	4.5		--		--		--		--
	1263-154-0	67		6.1		<0.027		--		--
	1263-154-2	15	J	--		--		--		--
	1263-155-0	54		2.5		--		--		--
	1263-155-2	4.7		--		--		--		--
	1263-156-0	58		3.4		--		--		--
	1263-156-2	13		--		--		--		--
47 (See Figure 12)	1263-157-0	12		--		--		--		--
	1263-157-2	12		--		--		--		--
	1263-158-0	13		--		--		--		--
	1263-158-2	16		--		--		--		--
	1263-159-0	11		--		--		--		--
	1263-159-2	11		--		--		--		--
	1263-160-0	13		--		--		--		--
	1263-160-2	14		--		--		--		--
51 (See Figure 14)	1263-161-0	44		1.8		--		--		--
	1263-161-2	51		2.8		--		--		--
	1263-162-0	43		2.5		--		--		--
	1263-162-2	3.7	JB	--		--		--		--
	1263-163-0	42		2.1		--		--		--
	1263-163-2	4.4		--		--		--		--
	1263-164-0	44		2.4	J	--		--		--
	1263-164-2	5.2		--		--		--		--
	Minimum	3.3		1.5		<0.027		0.043 NJ		6.3
	Maximum	460		27		0.83		0.33		8.8
	Mean	81.5		--		--		--		--
	Standard Deviation	107.3		--		--		--		--

NOTES:

(1) Analysis by EPA method 6010B. Extraction methods vary.

(2) pH determined with EPA method 9045C.

mg/kg = milligrams per kilogram

mg/L = milligrams per liter

SHADED = exceeds threshold limit of 5mg/L for STLC

-- = Not analyzed or not applicable

* - The sample was reanalyzed due to data inconsistency (total lead and Cal-WET-citric). The reported result is from the second analysis. Both laboratory reports are appended to this report.

VALIDATION QUALIFIERS

J	The analyte was positively identified; the associated numerical value is the approximate concentration of the analyte in the sample.
B	The analyte was detected in the method, field and/or trip blank.
NJ	The analysis indicates the presence of an analyte that has been "tentatively identified" and the associated numerical value represents its approximate concentration.
UJ	The analyte was not detected above the reported sample quantitation limit. However, the reported quantitation limit is approximate and may or may not represent the actual limit of quantitation necessary to accurately and precisely measure the analyte in the sample.

TABLE 2
SUMMARY OF SOIL ANALYTICAL RESULTS-TITLE 22 METALS
ADL SITE INVESTIGATION
LA-91- PM R11.32/R20.74
LOS ANGELES COUNTY, CALIFORNIA
PN: 0714000151-1; EA#306201
TASK ORDER #16; CONTRACT 07A3321

CALTRANS UNIQUE SAMPLE ID[1]	SAMPLE DEPTH[2]	SAMPLE DATE	TITLE 22 METALS															
			ANTIMONY	ARSENIC	BARIUM	BERYLLIUM	CADMIUM	CHROMIUM	COBALT	COPPER	MOLYBDENUM	NICKEL	SELENIUM	SILVER	THALLIUM	VANADIUM	ZINC	MERCURY
Southern California Background Levels [3]			*380 [2]*	*0.6-11.0*	*133-1400*	*0.25-2.70*	*0.05-1.70*	*23-1579*	*2.7-46.9*	*9.1-96.4*	*0.1-9.6*	*9-509*	*0.015-0.430*	*13.2-39.4*	*9.8-36.2*	*75-288*	*133-236*	*0.05-0.90*
USEPA RSLs - Industrial Use (4)			*410*	*2.4*	*190,000*	*2,000*	*800*	*1,500,000*	*300*	*41,000*	*5,100*	*20,000*	*5,100*	*5,100*	*10*	*5,100*	*310,000*	*43*
California TTLC (mg/kg)			*500*	*500*	*10,000*	*75*	*100*	*2,500*	*8,000*	*2,500*	*3,500*	*2,000*	*100*	*500*	*700*	*2,400*	*5,000*	*20*
10 x California STLC (mg/kg)			*150*	*50*	*1,000*	*7.5*	*10*	*50*	*800*	*250*	*3,500*	*200*	*10*	*50*	*70*	*240*	*2,500*	*2*
20 x RCRA Toxicity Charateristic (mg/kg)			*--*	*100*	*2,000*	*--*	*20*	*100*	*--*	*--*	*--*	*--*	*20*	*100*	*--*	*--*	*--*	*4*
SOIL SAMPLES																		
1263-111-2	2	11/6/2014	<0.25	3.9	66	<0.04	0.37 NJ	16	7.9	18	0.5 NJ	12	<0.15	<0.06	<0.20	33	44	0.03 NJ
1263-113-0	0	11/6/2014	<0.25	7.5	140	<0.04	1.2	26	9.9	49	2.0	21	<0.15	<0.06	<0.20	36	310	0.32 J
1263-114-2	2	11/6/2014	<0.25	2.2	41	<0.04	0.39 NJ	8.4	4.0	8.6	0.4 NJ	6.6	<0.15	<0.06	<0.20	17	38	0.04 NJ
1263-123-0	0	11/6/2014	<0.25	4.9	110	<0.04	1.0	21	7.5	41	1.8	17	<0.15	<0.06	<0.20	28	310	0.09 NJ
1263-123-2	2	11/6/2014	<0.25	4.6	97	<0.04	0.63 NJ	18	8.6	26	0.65 NJ	14	<0.15	<0.06	<0.20	33	120	0.22 J
1263-130-0	0	11/7/2014	<0.25	7.8	190	<0.04	2.0	29	9.8	150	2.5	21	<0.15	<0.06	<0.20	36	450	0.14 J
1263-132-2	2	11/7/2014	<0.25	7.1	150	<0.04	0.72 NJ	24	14	33	0.41 NJ	19	<0.15	<0.06	<0.20	51	84	0.15 J
1263-138-2	2	11/7/2014	<0.25	4.6	120	<0.04	0.47 NJ	19	11	22	0.28 NJ	15	<0.15	<0.06	<0.20	42	54	0.17 J
1263-146-0	0	11/7/2014	<0.25	7.4	150	<0.04	1.3	26	8.4	49	1.9	21	<0.15	<0.06	<0.20	33	350	0.11 J
1263-148-0	0	11/7/2014	<0.25	7.0	140	<0.04	1.6	27	7.8	56	2.0	21	<0.15	<0.06	<0.20	31	490	<0.009
QA/QC SAMPLES																		
1263-EBQC-1	QA/QC*	11/6/2014	<0.0026	<0.0024	**0.0005 NJ**	**0.0004 NJB**	<0.0001	**0.0006 NJ**	<0.0004	<0.0009	<0.0005	**0.0004 NJ**	<0.0040	**0.0007 NJ**	<0.0026	<0.0013	**0.0096 NJB**	<0.11
1263-EBQC-2	QA/QC*	11/7/2014	<0.0026	<0.0024	**0.0004 NJ**	<0.0002	<0.0001	**0.0008 NJB**	<0.0004	**0.0018**	**0.0007 NJB**	**0.0016 NJB**	<0.0040	**0.001 UJB**	<0.0026	<0.0013	**0.014 JB**	<0.11
1263-EBQC-3	QA/QC*	11/10/2014	<0.0026	<0.0024	**0.0005 NJ**	<0.0002	**0.0002 NJ**	**0.0008 NJB**	<0.0004	**0.0021**	**0.0011 NJB**	**0.0012 NJB**	<0.0040	**0.0009 UJB**	<0.0026	<0.0013	**0.016 JB**	<0.11

NOTES:

All soil results in mg/Kg

(1) - Boring identification number

(2) - Sample depth reported in feet below the ground surface

(3) FOR SOIL: Marrett, D.J., A.L. Page, G.R. Bradford, D. Bakhtar, R.C. Graham, A.C. Chang, Background Levels of Soil Trace Elements in Southern California Soils, April, 1991

(4) United States Environmental Protection Agency (Region 9) Regional Screening Levels (RSLs; in mg/Kg) for VOCs for industrial soil (last updated May 2013) - - Traditional Table with a Target Cancer Risk Level of 1.0x10-6 and a Target Hazard Quotient of 1.0.

<0.5 - Analyte not reported at or above stated reporting limit

* QA/QC samples consisted of liquid equipment blanks (mg/L)

J The analyte was positively identified; the associated numerical value is the approximate concentration of the analyte in the sample.

B The analyte was detected in the method, field and/or trip blank.

NJ The analysis indicates the presence of an analyte that has been "tentatively identified" and the associated numerical value represents its approximate concentration.

UJ The analyte was not detected above the reported sample quantitation limit. However, the reported quantitation limit is approximate and may or may not represent the actual limit of quantitation necessary to accurately and precisely measure the analyte in the sample.

FIGURES

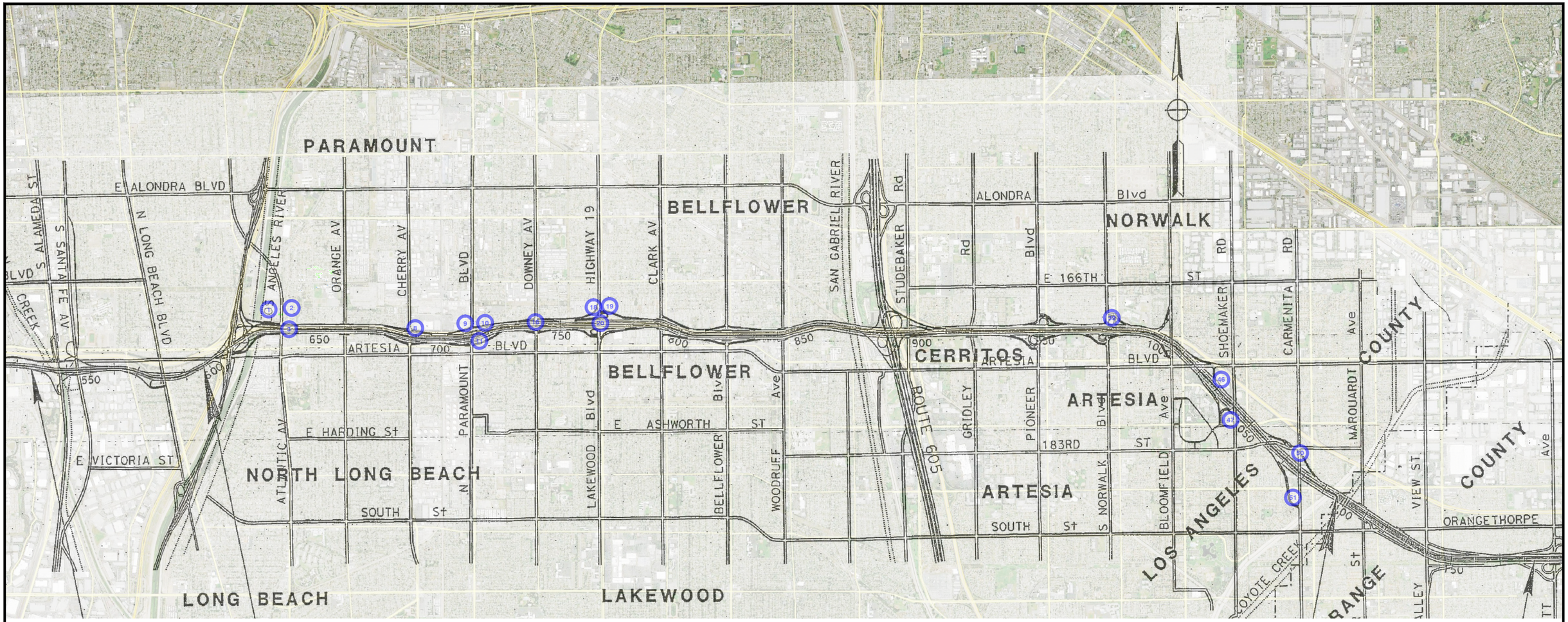

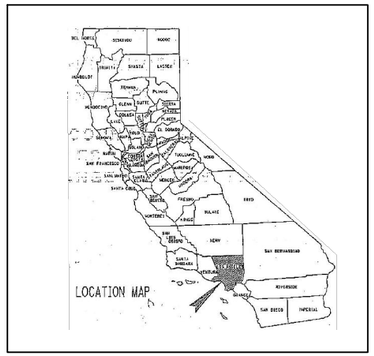

SITE LOCATION MAP
NOT TO SCALE

LEGEND:

① RAMP NUMBER

0 4000 8000

APPROXIMATE SCALE IN FEET

Stantec
25864-F BUSINESS CENTER DRIVE
REDLANDS, CALIFORNIA 92374
PHONE:(909) 335-6116 FAX:(909) 335-6120

FOR:
CALTRANS, DISTRICT 7
Contract: 07A3321
Task Order No. 16
LA-91 PM R 11.32/R20.74
PN: 0714000151-1; EA: 306201

SITE LOCATION MAP

FIGURE: 1

JOB NUMBER:	DRAWN BY:	CHECKED BY:	APPROVED BY:	DATE:
185831016	STA	AP	KM	12/09/14

FILEPATH:M:_00 OTHER OFFICES\04-REDLANDS\CAL-TRANS\ADL\TO-16_A_FIG 1_TO16_SITE LOCATION MAP FROM CALTRANS.dwg|saguinaldo|Dec 11, 2014 at 19:25|Layout: 11X17 L

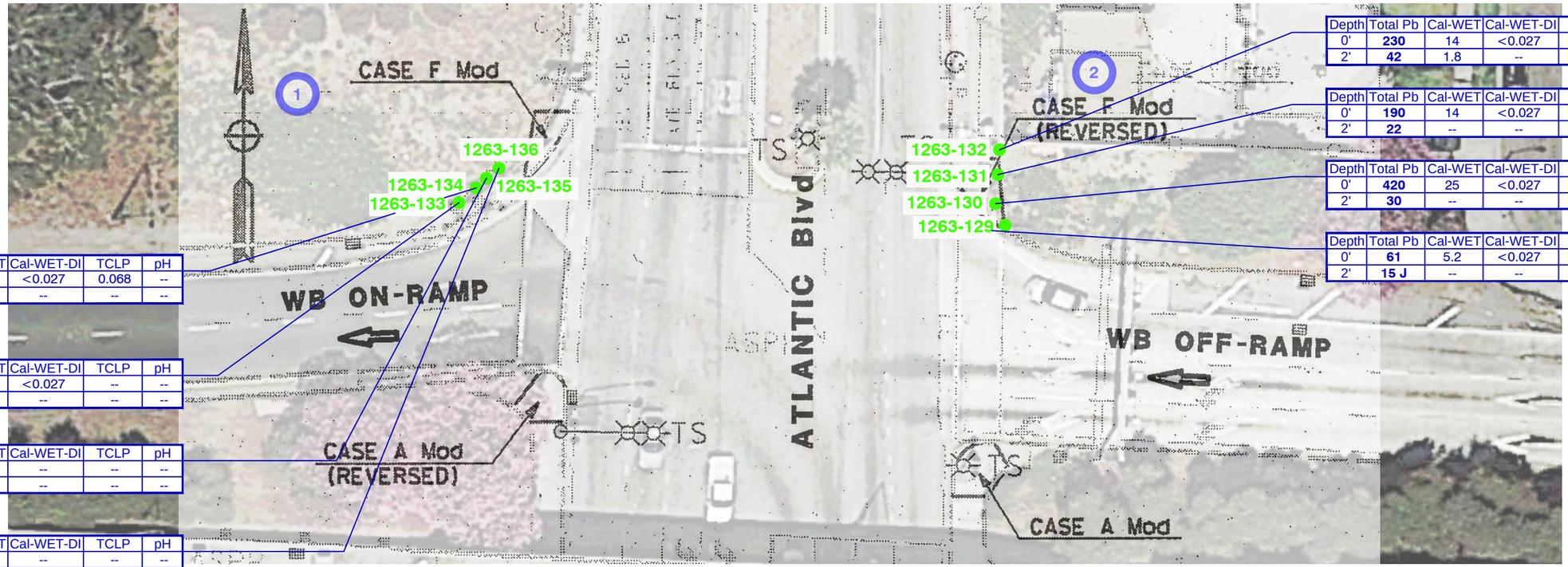

Depth	Total Pb	Cal-WET	Cal-WET-DI	TCLP	pH
0'	**150**	7.5	<0.027	0.068	--
2'	**42**	2.4	--	--	--

Depth	Total Pb	Cal-WET	Cal-WET-DI	TCLP	pH
0'	**130**	7.6	<0.027	--	--
2'	**7.7**	--	--	--	--

Depth	Total Pb	Cal-WET	Cal-WET-DI	TCLP	pH
0'	**58**	3.6	--	--	--
2'	**6.1**	--	--	--	--

Depth	Total Pb	Cal-WET	Cal-WET-DI	TCLP	pH
0'	**81**	3.6	--	--	--
2'	**5.6**	--	--	--	--

Depth	Total Pb	Cal-WET	Cal-WET-DI	TCLP	pH
0'	**230**	14	<0.027	0.078	7.4
2'	**42**	1.8	--	--	--

Depth	Total Pb	Cal-WET	Cal-WET-DI	TCLP	pH
0'	**190**	14	<0.027	0.060	--
2'	**22**	--	--	--	--

Depth	Total Pb	Cal-WET	Cal-WET-DI	TCLP	pH
0'	**420**	25	<0.027	0.17	7.0
2'	**30**	--	--	--	--

Depth	Total Pb	Cal-WET	Cal-WET-DI	TCLP	pH
0'	**61**	5.2	<0.027	--	--
2'	**15 J**	--	--	--	--

LEGEND:

1263-133 ●	BORING LOCATION
Total Pb	TOTAL LEAD IN MILLIGRAMS PER KILOGRAM (mg/kg)
Cal-WET	SOLUBLE LEAD BY CAL-WET CITRIC IN MILLIGRAMS PER LITER (mg/L)
Cal-WET DI	SOLUBLE LEAD BY CAL-WET DI IN MILLIGRAMS PER LITER (mg/L)
TCLP	SOLUBLE LEAD TOXICITY CHARACTERISTIC LEACHING PROCEDURE (mg/L)
<	ANALYTE NOT REPORTED AT OR ABOVE STATED LABORATORY METHOD DETECTION LIMIT (MDL)
J	THE ANALYTE WAS POSITIVELY IDENTIFIED; THE ASSOCIATED NUMERICAL VALUE IS THE APPROXIMATE CONCENTRATION OF THE ANALYTE IN THE SAMPLE
--	NOT ANALYZED
1	RAMP NUMBER

0 30 60

APPROXIMATE SCALE IN FEET

Stantec
25864-F BUSINESS CENTER DRIVE
REDLANDS, CALIFORNIA 92374
PHONE:(909) 335-6116 FAX:(909) 335-6120

FOR:
CALTRANS, DISTRICT 7
Contract: 07A3321
Task Order No. 16
LA-91 PM R 11.32/R20.74
PN: 0714000151-1; EA: 306201

SAMPLE LOCATION MAP
RAMP 1 AND RAMP 2

FIGURE: 2

JOB NUMBER:	DRAWN BY:	CHECKED BY:	APPROVED BY:	DATE:
185831016	STA	AP	KM	12/09/14

FILEPATH:M:_00 OTHER OFFICES\04-REDLANDS\CAL-TRANS\ADL\TO-16_A_FIG 2_TO16_ATLANTIC WB_ON-RAMP_OFF-RAMP_RIGHT.dwg|saguinaldo|Dec 11, 2014 at 14:07|Layout: 11X17 L

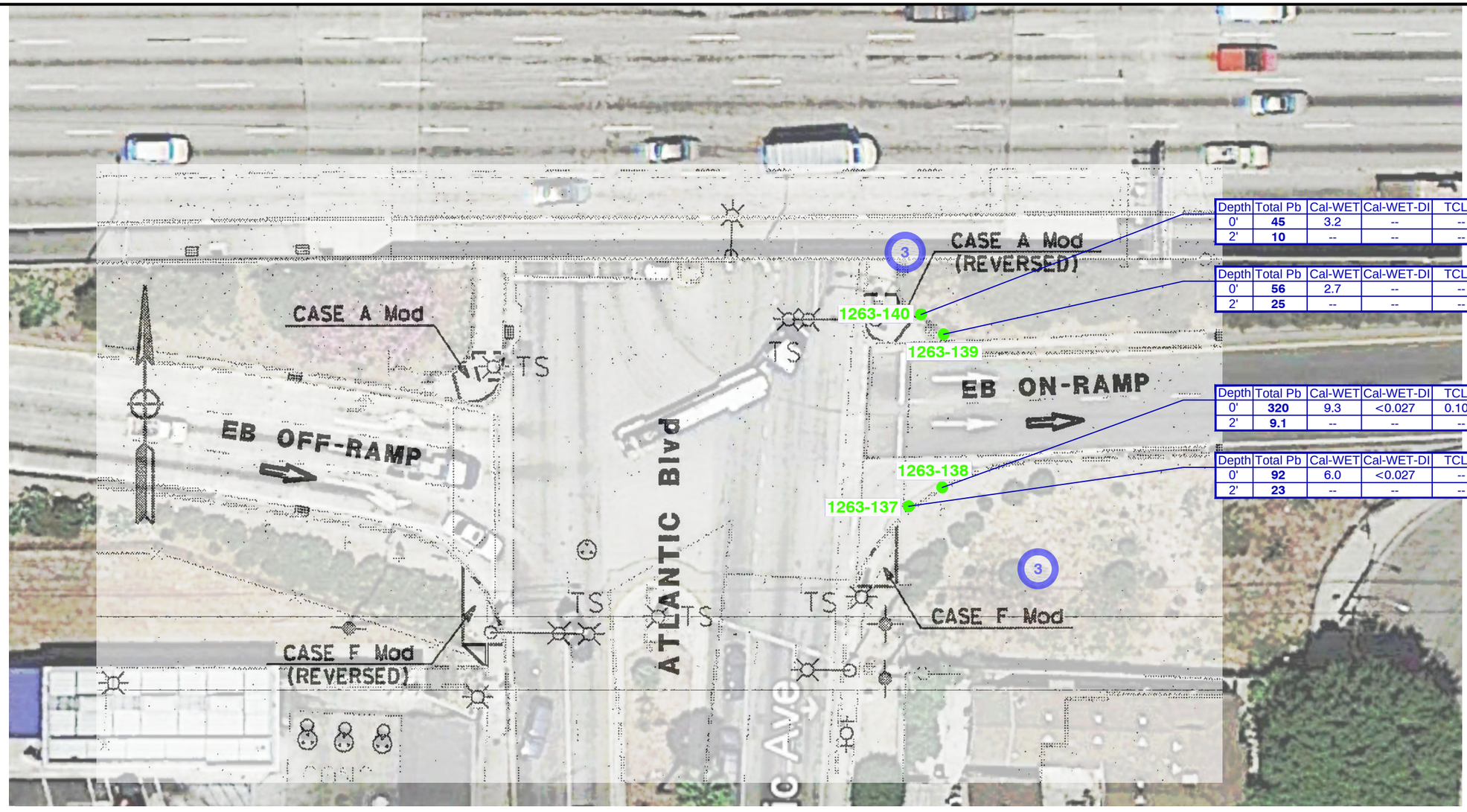

Depth	Total Pb	Cal-WET	Cal-WET-DI	TCLP	pH
0'	**45**	3.2	--	--	--
2'	**10**	--	--	--	--

Depth	Total Pb	Cal-WET	Cal-WET-DI	TCLP	pH
0'	**56**	2.7	--	--	--
2'	**25**	--	--	--	--

Depth	Total Pb	Cal-WET	Cal-WET-DI	TCLP	pH
0'	**320**	9.3	<0.027	0.10 J	8.8
2'	**9.1**	--	--	--	--

Depth	Total Pb	Cal-WET	Cal-WET-DI	TCLP	pH
0'	**92**	6.0	<0.027	--	--
2'	**23**	--	--	--	--

LEGEND:

1263-137 ●	BORING LOCATION
Total Pb	TOTAL LEAD IN MILLIGRAMS PER KILOGRAM (mg/kg)
Cal-WET	SOLUBLE LEAD BY CAL-WET CITRIC IN MILLIGRAMS PER LITER (mg/L)
Cal-WET DI	SOLUBLE LEAD BY CAL-WET DI IN MILLIGRAMS PER LITER (mg/L)
TCLP	SOLUBLE LEAD TOXICITY CHARACTERISTIC LEACHING PROCEDURE (mg/L)
<	ANALYTE NOT REPORTED AT OR ABOVE STATED LABORATORY METHOD DETECTION LIMIT (MDL)
J	THE ANALYTE WAS POSITIVELY IDENTIFIED; THE ASSOCIATED NUMERICAL VALUE IS THE APPROXIMATE CONCENTRATION OF THE ANALYTE IN THE SAMPLE
--	NOT ANALYZED
3	RAMP NUMBER

0 30 60

APPROXIMATE SCALE IN FEET

Stantec
25864-F BUSINESS CENTER DRIVE
REDLANDS, CALIFORNIA 92374
PHONE:(909) 335-6116 FAX:(909) 335-6120

FOR:
CALTRANS, DISTRICT 7
Contract: 07A3321
Task Order No. 16
LA-91 PM R 11.32/R20.74
PN: 0714000151-1; EA: 306201

SAMPLE LOCATION MAP
RAMP 3

FIGURE: 3

JOB NUMBER:	DRAWN BY:	CHECKED BY:	APPROVED BY:	DATE:
185831016	STA	AP	KM	12/09/14

FILEPATH:M:_00 OTHER OFFICES\04-REDLANDS\CAL-TRANS\ADL\TO-16_A_FIG 3_TO16_ATLANTIC EB_ON-RAMP_OFF-RAMP_RIGHT.dwg|saguinaldo|Dec 12, 2014 at 11:39|Layout: 11X17 L

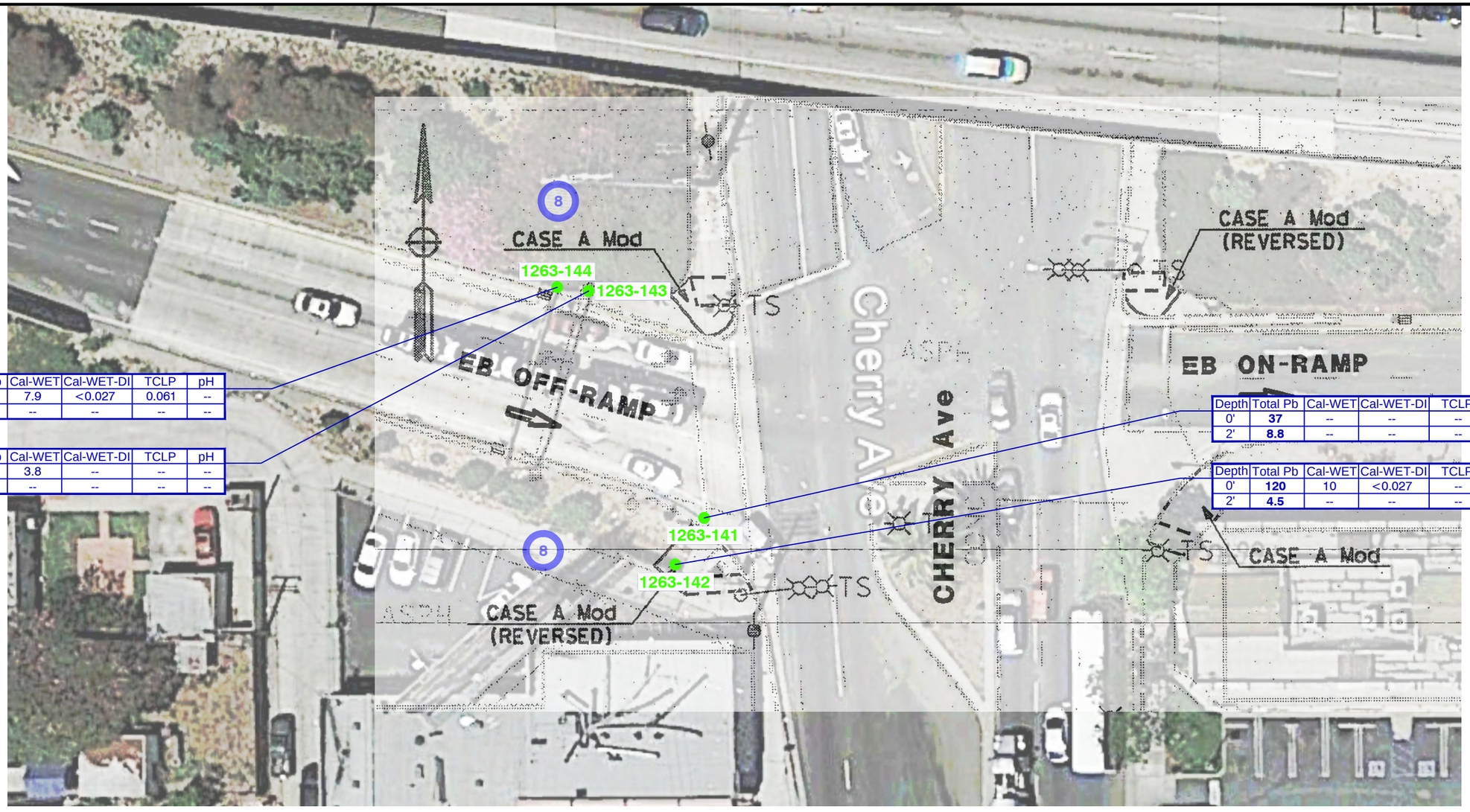

Depth	Total Pb	Cal-WET	Cal-WET-DI	TCLP	pH
0'	**200**	7.9	<0.027	0.061	--
2'	**9.4**	--	--	--	--

Depth	Total Pb	Cal-WET	Cal-WET-DI	TCLP	pH
0'	**73**	3.8	--	--	--
2'	**5.3**	--	--	--	--

Depth	Total Pb	Cal-WET	Cal-WET-DI	TCLP	pH
0'	**37**	--	--	--	--
2'	**8.8**	--	--	--	--

Depth	Total Pb	Cal-WET	Cal-WET-DI	TCLP	pH
0'	**120**	10	<0.027	--	--
2'	**4.5**	--	--	--	--

LEGEND:

1263-142 ●	BORING LOCATION
Total Pb	TOTAL LEAD IN MILLIGRAMS PER KILOGRAM (mg/kg)
Cal-WET	SOLUBLE LEAD BY CAL-WET CITRIC IN MILLIGRAMS PER LITER (mg/L)
Cal-WET DI	SOLUBLE LEAD BY CAL-WET DI IN MILLIGRAMS PER LITER (mg/L)
TCLP	SOLUBLE LEAD TOXICITY CHARACTERISTIC LEACHING PROCEDURE (mg/L)
<	ANALYTE NOT REPORTED AT OR ABOVE STATED LABORATORY METHOD DETECTION LIMIT (MDL)
--	NOT ANALYZED
8	RAMP NUMBER

0 30 60

APPROXIMATE SCALE IN FEET

Stantec
25864-F BUSINESS CENTER DRIVE
REDLANDS, CALIFORNIA 92374
PHONE:(909) 335-6116 FAX:(909) 335-6120

FOR:
CALTRANS, DISTRICT 7
Contract: 07A3321
Task Order No. 16
LA-91 PM R 11.32/R20.74
PN: 0714000151-1; EA: 306201

SAMPLE LOCATION MAP
RAMP 8

FIGURE: 4

JOB NUMBER:	DRAWN BY:	CHECKED BY:	APPROVED BY:	DATE:
185831016	STA	AP	KM	12/09/14

FILEPATH:M:_00 OTHER OFFICES\04-REDLANDS\CAL-TRANS\ADL\TO-16_A_FIG 4_TO16_CHERRY EB_OFF-RAMP.dwg|saguinaldo|Dec 11, 2014 at 15:03|Layout: 11X17 L

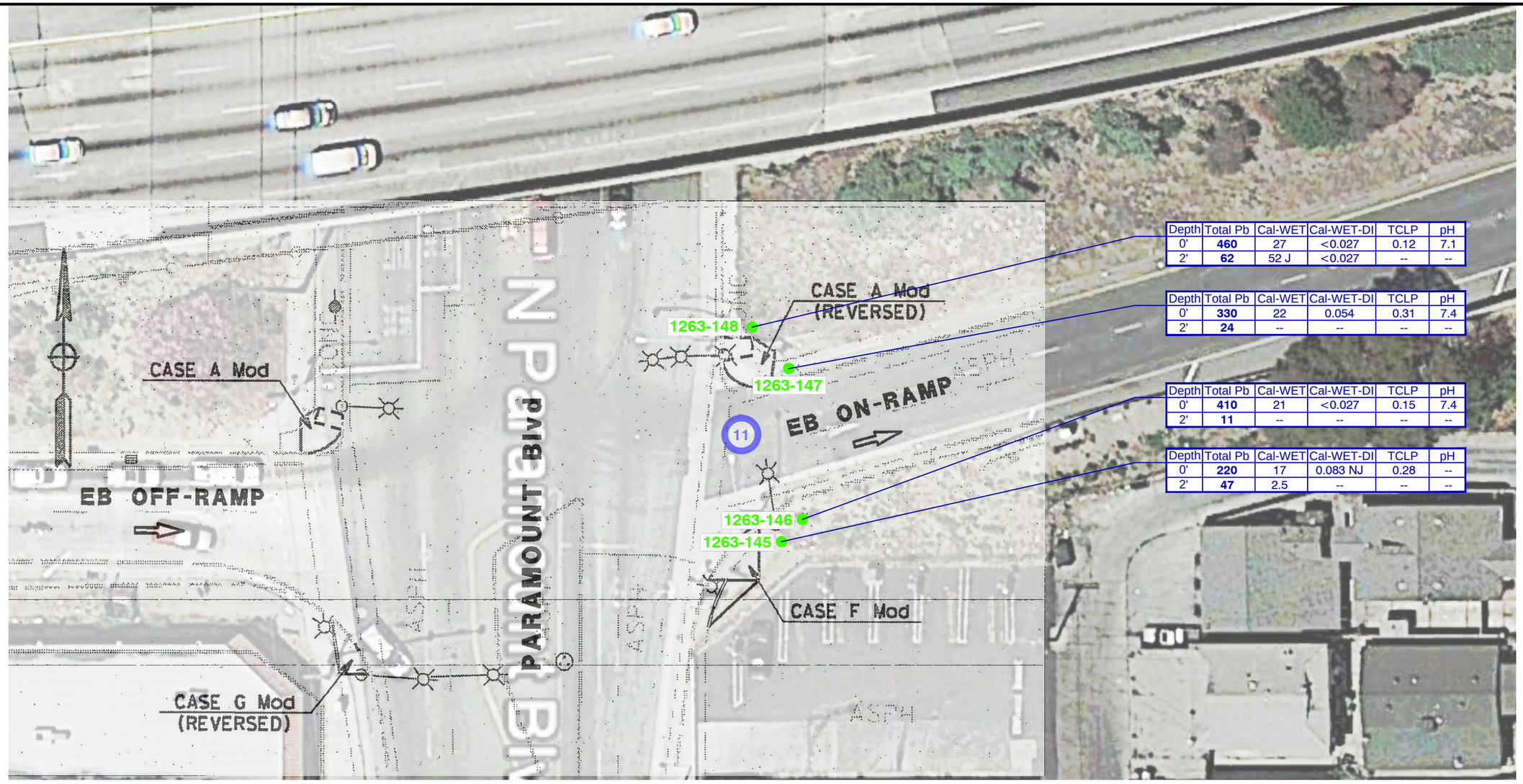

Depth	Total Pb	Cal-WET	Cal-WET-DI	TCLP	pH
0'	**460**	27	<0.027	0.12	7.1
2'	**62**	52 J	<0.027	--	--

Depth	Total Pb	Cal-WET	Cal-WET-DI	TCLP	pH
0'	**330**	22	0.054	0.31	7.4
2'	**24**	--	--	--	--

Depth	Total Pb	Cal-WET	Cal-WET-DI	TCLP	pH
0'	**410**	21	<0.027	0.15	7.4
2'	**11**	--	--	--	--

Depth	Total Pb	Cal-WET	Cal-WET-DI	TCLP	pH
0'	**220**	17	0.083 NJ	0.28	--
2'	**47**	2.5	--	--	--

LEGEND:

1263-145 ●	BORING LOCATION
Total Pb	TOTAL LEAD IN MILLIGRAMS PER KILOGRAM (mg/kg)
Cal-WET	SOLUBLE LEAD BY CAL-WET CITRIC IN MILLIGRAMS PER LITER (mg/L)
Cal-WET DI	SOLUBLE LEAD BY CAL-WET DI IN MILLIGRAMS PER LITER (mg/L)
TCLP	SOLUBLE LEAD TOXICITY CHARACTERISTIC LEACHING PROCEDURE (mg/L)
<	ANALYTE NOT REPORTED AT OR ABOVE STATED LABORATORY METHOD DETECTION LIMIT (MDL)
--	NOT ANALYZED
J	THE ANALYTE WAS POSITIVELY IDENTIFIED, THE ASSOCIATED NUMERICAL VALUE IS THE APPROXIMATE CONCENTRATION OF THE ANALYTE IN THE SAMPLE
NJ	THE ANALYSIS INDICATES THE PRESENCE OF AN ANALYTE THAT HAS BEEN "TENTATIVELY IDENTIFIED" AND THE ASSOCIATED NUMERICAL VALUE REPRESENTS ITS APPROXIMATE CONCENTRATION
11	RAMP NUMBER

0 30 60

APPROXIMATE SCALE IN FEET

Stantec
25864-F BUSINESS CENTER DRIVE
REDLANDS, CALIFORNIA 92374
PHONE:(909) 335-6116 FAX:(909) 335-6120

FOR:
CALTRANS, DISTRICT 7
Contract: 07A3321
Task Order No. 16
LA-91 PM R 11.32/R20.74
PN: 0714000151-1; EA: 306201

SAMPLE LOCATION MAP
RAMP 11

FIGURE: 5

JOB NUMBER:	DRAWN BY:	CHECKED BY:	APPROVED BY:	DATE:
185831016	STA	AP	KM	12/09/14

FILEPATH:M:_00 OTHER OFFICES\04-REDLANDS\CAL-TRANS\ADL\TO-16_A_FIG 5_TO16_PARAMOUNT EB_ON-RAMP.dwg|saguinaldo|Dec 12, 2014 at 10:19|Layout: 11X17 L

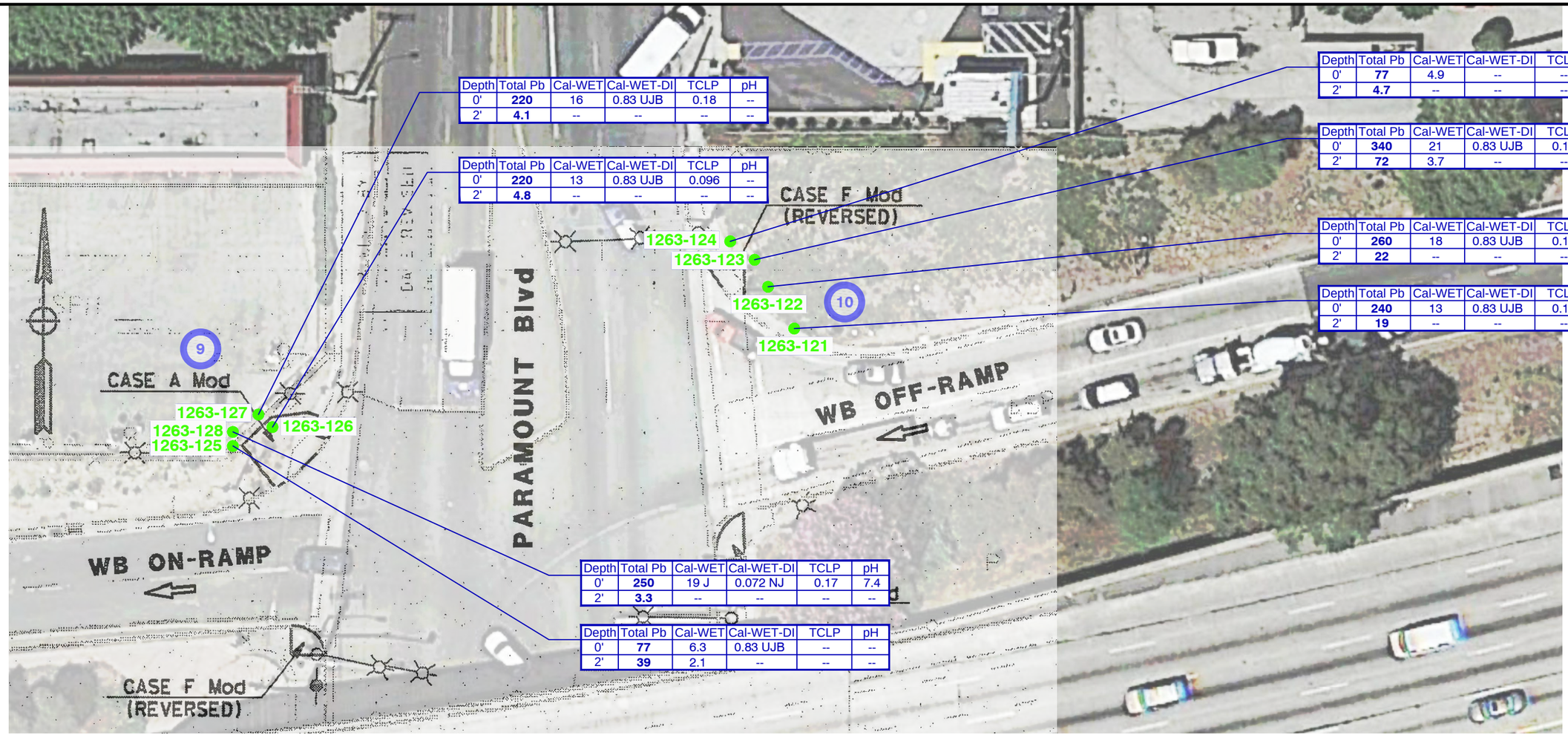

Depth	Total Pb	Cal-WET	Cal-WET-DI	TCLP	pH
0'	**220**	16	0.83 UJB	0.18	--
2'	**4.1**	--	--	--	--

Depth	Total Pb	Cal-WET	Cal-WET-DI	TCLP	pH
0'	**220**	13	0.83 UJB	0.096	--
2'	**4.8**	--	--	--	--

Depth	Total Pb	Cal-WET	Cal-WET-DI	TCLP	pH
0'	**250**	19 J	0.072 NJ	0.17	7.4
2'	**3.3**	--	--	--	--

Depth	Total Pb	Cal-WET	Cal-WET-DI	TCLP	pH
0'	**77**	6.3	0.83 UJB	--	--
2'	**39**	2.1	--	--	--

Depth	Total Pb	Cal-WET	Cal-WET-DI	TCLP	pH
0'	**77**	4.9	--	--	--
2'	**4.7**	--	--	--	--

Depth	Total Pb	Cal-WET	Cal-WET-DI	TCLP	pH
0'	**340**	21	0.83 UJB	0.16	7.3
2'	**72**	3.7	--	--	--

Depth	Total Pb	Cal-WET	Cal-WET-DI	TCLP	pH
0'	**260**	18	0.83 UJB	0.15	6.6
2'	**22**	--	--	--	--

Depth	Total Pb	Cal-WET	Cal-WET-DI	TCLP	pH
0'	**240**	13	0.83 UJB	0.13	6.3
2'	**19**	--	--	--	--

LEGEND:

1263-121 ●	BORING LOCATION
Total Pb	TOTAL LEAD IN MILLIGRAMS PER KILOGRAM (mg/kg)
Cal-WET	SOLUBLE LEAD BY CAL-WET CITRIC IN MILLIGRAMS PER LITER (mg/L)
Cal-WET DI	SOLUBLE LEAD BY CAL-WET DI IN MILLIGRAMS PER LITER (mg/L)
TCLP	SOLUBLE LEAD TOXICITY CHARACTERISTIC LEACHING PROCEDURE (mg/L)
<	ANALYTE NOT REPORTED AT OR ABOVE STATED LABORATORY METHOD DETECTION LIMIT (MDL)
--	NOT ANALYZED
J	THE ANALYTE WAS POSITIVELY IDENTIFIED, THE ASSOCIATED NUMERICAL VALUE IS THE APPROXIMATE CONCENTRATION OF THE ANALYTE IN THE SAMPLE
B	THE ANALYTE WAS DETECTED IN THE METHOD, FIELD AND/OR TRIP BLANK
NJ	THE ANALYSIS INDICATES THE PRESENCE OF AN ANALYTE THAT HAS BEEN "TENTATIVELY IDENTIFIED" AND THE ASSOCIATED NUMERICAL VALUE REPRESENTS ITS APPROXIMATE CONCENTRATION
UJ	THE ANALYTE WAS NOT DETECTED ABOVE THE REPORTED SAMPLE QUANTITATION LIMIT. HOWEVER, THE REPORTED QUANTITATION LIMIT IS APPROXIMATE AND MAY OR MAY NOT REPRESENT THE ACTUAL LIMIT OF QUANTITATION NECESSARY TO ACCURATELY AND PRECISELY MEASURE THE ANALYTE IN THE SAMPLE
9	RAMP NUMBER

0 30 60

APPROXIMATE SCALE IN FEET

Stantec
25864-F BUSINESS CENTER DRIVE
REDLANDS, CALIFORNIA 92374
PHONE:(909) 335-6116 FAX:(909) 335-6120

FOR:
CALTRANS, DISTRICT 7
Contract: 07A3321
Task Order No. 16
LA-91 PM R 11.32/R20.74
PN: 0714000151-1; EA: 306201

SAMPLE LOCATION MAP
RAMP 9 AND RAMP 10

FIGURE: 6

JOB NUMBER:	DRAWN BY:	CHECKED BY:	APPROVED BY:	DATE:
185831016	STA	AP	KM	12/09/14

FILEPATH:M:_00 OTHER OFFICES\04-REDLANDS\CAL-TRANS\ADL\TO-16_A_FIG 6_TO16_PARAMOUNT WB_ON-RAMP-OFF-RAMP.dwg|saguinaldo|Dec 12, 2014 at 11:54|Layout: 11X17 L

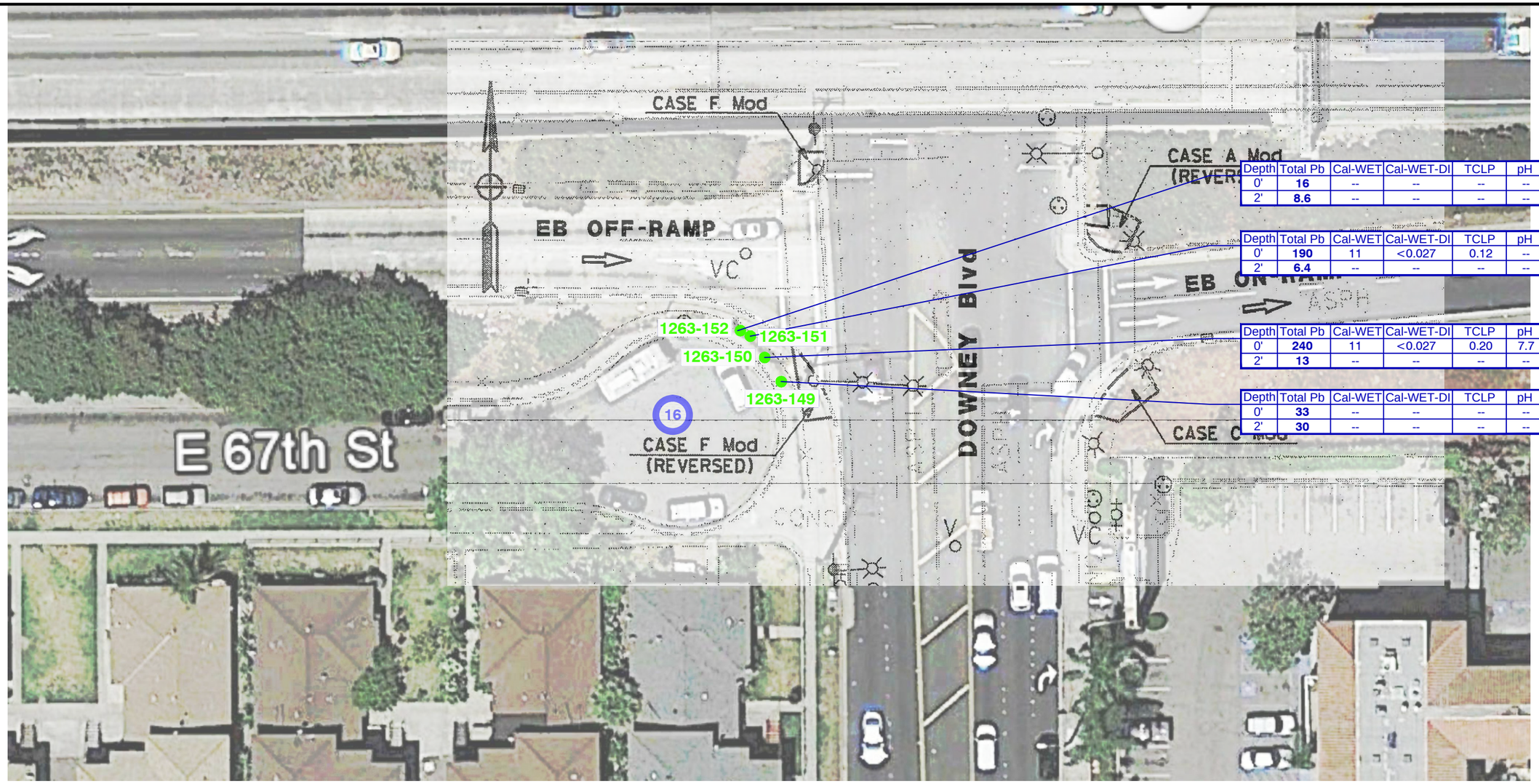

Depth	Total Pb	Cal-WET	Cal-WET-DI	TCLP	pH
0'	**16**	--	--	--	--
2'	**8.6**	--	--	--	--

Depth	Total Pb	Cal-WET	Cal-WET-DI	TCLP	pH
0'	**190**	11	<0.027	0.12	--
2'	**6.4**	--	--	--	--

Depth	Total Pb	Cal-WET	Cal-WET-DI	TCLP	pH
0'	**240**	11	<0.027	0.20	7.7
2'	**13**	--	--	--	--

Depth	Total Pb	Cal-WET	Cal-WET-DI	TCLP	pH
0'	**33**	--	--	--	--
2'	**30**	--	--	--	--

LEGEND:

1263-148 ●	BORING LOCATION
Total Pb	TOTAL LEAD IN MILLIGRAMS PER KILOGRAM (mg/kg)
Cal-WET	SOLUBLE LEAD BY CAL-WET CITRIC IN MILLIGRAMS PER LITER (mg/L)
Cal-WET DI	SOLUBLE LEAD BY CAL-WET DI IN MILLIGRAMS PER LITER (mg/L)
TCLP	SOLUBLE LEAD TOXICITY CHARACTERISTIC LEACHING PROCEDURE (mg/L)
<	ANALYTE NOT REPORTED AT OR ABOVE STATED LABORATORY METHOD DETECTION LIMIT (MDL)
--	NOT ANALYZED
16	RAMP NUMBER

0 30 60

APPROXIMATE SCALE IN FEET

Stantec
25864-F BUSINESS CENTER DRIVE
REDLANDS, CALIFORNIA 92374
PHONE:(909) 335-6116 FAX:(909) 335-6120

FOR:
CALTRANS, DISTRICT 7
Contract: 07A3321
Task Order No. 16
LA-91 PM R 11.32/R20.74
PN: 0714000151-1; EA: 306201

SAMPLE LOCATION MAP
RAMP 16

FIGURE: 7

JOB NUMBER:	DRAWN BY:	CHECKED BY:	APPROVED BY:	DATE:
185831016	STA	AP	KM	12/09/14

FILEPATH:M:_00 OTHER OFFICES\04-REDLANDS\CAL-TRANS\ADL\TO-16_A_FIG 7_TO16_DOWNEY EB_OFF-RAMP.dwg|saguinaldo|Dec 11, 2014 at 15:45|Layout: 11X17 L

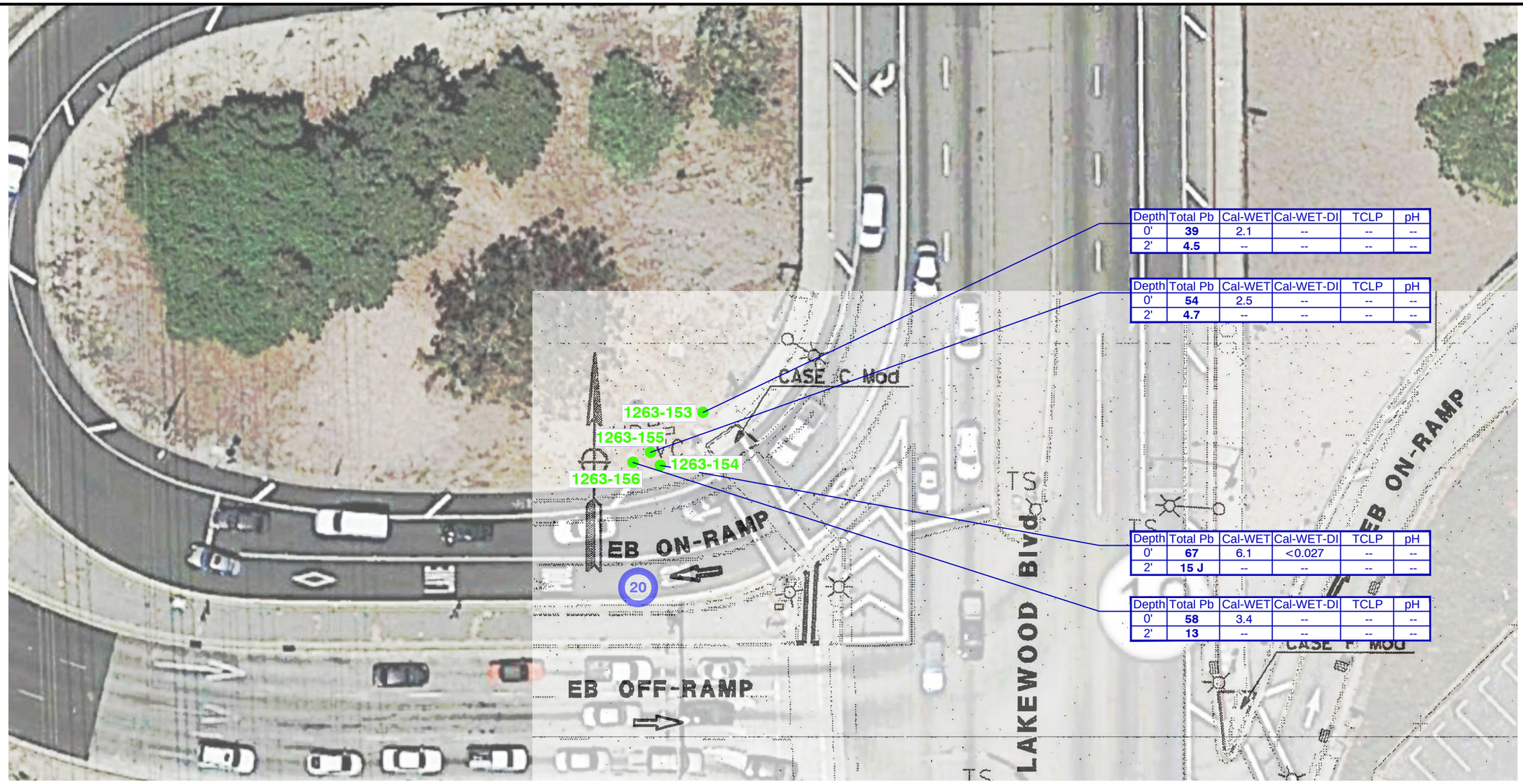

Depth	Total Pb	Cal-WET	Cal-WET-DI	TCLP	pH
0'	**39**	2.1	--	--	--
2'	**4.5**	--	--	--	--

Depth	Total Pb	Cal-WET	Cal-WET-DI	TCLP	pH
0'	**54**	2.5	--	--	--
2'	**4.7**	--	--	--	--

Depth	Total Pb	Cal-WET	Cal-WET-DI	TCLP	pH
0'	**67**	6.1	<0.027	--	--
2'	**15 J**	--	--	--	--

Depth	Total Pb	Cal-WET	Cal-WET-DI	TCLP	pH
0'	**58**	3.4	--	--	--
2'	**13**	--	--	--	--

LEGEND:

1263-153 ●	BORING LOCATION
Total Pb	TOTAL LEAD IN MILLIGRAMS PER KILOGRAM (mg/kg)
Cal-WET	SOLUBLE LEAD BY CAL-WET CITRIC IN MILLIGRAMS PER LITER (mg/L)
Cal-WET DI	SOLUBLE LEAD BY CAL-WET DI IN MILLIGRAMS PER LITER (mg/L)
TCLP	SOLUBLE LEAD TOXICITY CHARACTERISTIC LEACHING PROCEDURE (mg/L)
<	ANALYTE NOT REPORTED AT OR ABOVE STATED LABORATORY METHOD DETECTION LIMIT (MDL)
J	THE ANALYTE WAS POSITIVELY IDENTIFIED, THE ASSOCIATED NUMERICAL VALUE IS THE APPROXIMATE CONCENTRATION OF THE ANALYTE IN THE SAMPLE
--	NOT ANALYZED
20	RAMP NUMBER

0 30 60

APPROXIMATE SCALE IN FEET

Stantec
25864-F BUSINESS CENTER DRIVE
REDLANDS, CALIFORNIA 92374
PHONE:(909) 335-6116 FAX:(909) 335-6120

FOR:
CALTRANS, DISTRICT 7
Contract: 07A3321
Task Order No. 16
LA-91 PM R 11.32/R20.74
PN: 0714000151-1; EA: 306201

SAMPLE LOCATION MAP
RAMP 20

FIGURE: 8

JOB NUMBER:	DRAWN BY:	CHECKED BY:	APPROVED BY:	DATE:
185831016	STA	AP	KM	12/09/14

FILEPATH:M:_00 OTHER OFFICES\04-REDLANDS\CAL-TRANS\ADL\TO-16_A_FIG 8_TO16_LAKEWOOD EB_ON-RAMP.dwg|saguinaldo|Dec 12, 2014 at 11:59|Layout: 11X17 L

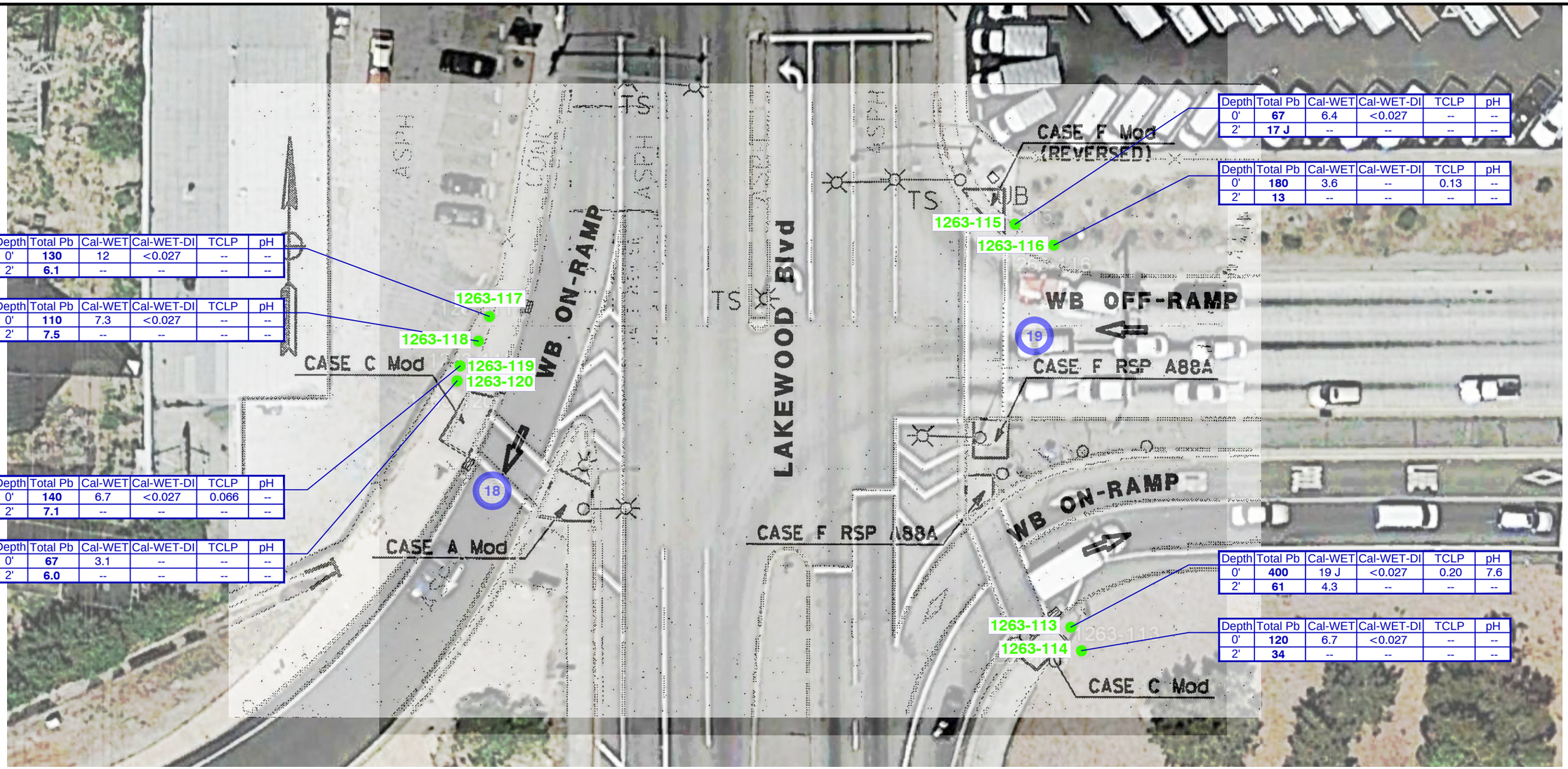

Depth	Total Pb	Cal-WET	Cal-WET-DI	TCLP	pH
0'	**130**	12	<0.027	--	--
2'	**6.1**	--	--	--	--

Depth	Total Pb	Cal-WET	Cal-WET-DI	TCLP	pH
0'	**110**	7.3	<0.027	--	--
2'	**7.5**	--	--	--	--

Depth	Total Pb	Cal-WET	Cal-WET-DI	TCLP	pH
0'	**140**	6.7	<0.027	0.066	--
2'	**7.1**	--	--	--	--

Depth	Total Pb	Cal-WET	Cal-WET-DI	TCLP	pH
0'	**67**	3.1	--	--	--
2'	**6.0**	--	--	--	--

Depth	Total Pb	Cal-WET	Cal-WET-DI	TCLP	pH
0'	**67**	6.4	<0.027	--	--
2'	**17 J**	--	--	--	--

Depth	Total Pb	Cal-WET	Cal-WET-DI	TCLP	pH
0'	**180**	3.6	--	0.13	--
2'	**13**	--	--	--	--

Depth	Total Pb	Cal-WET	Cal-WET-DI	TCLP	pH
0'	**400**	19 J	<0.027	0.20	7.6
2'	**61**	4.3	--	--	--

Depth	Total Pb	Cal-WET	Cal-WET-DI	TCLP	pH
0'	**120**	6.7	<0.027	--	--
2'	**34**	--	--	--	--

LEGEND:

1263-115 ●	BORING LOCATION
Total Pb	TOTAL LEAD IN MILLIGRAMS PER KILOGRAM (mg/kg)
Cal-WET	SOLUBLE LEAD BY CAL-WET CITRIC IN MILLIGRAMS PER LITER (mg/L)
Cal-WET DI	SOLUBLE LEAD BY CAL-WET DI IN MILLIGRAMS PER LITER (mg/L)
TCLP	SOLUBLE LEAD TOXICITY CHARACTERISTIC LEACHING PROCEDURE (mg/L)
<	ANALYTE NOT REPORTED AT OR ABOVE STATED LABORATORY METHOD DETECTION LIMIT (MDL)
J	THE ANALYTE WAS POSITIVELY IDENTIFIED, THE ASSOCIATED NUMERICAL VALUE IS THE APPROXIMATE CONCENTRATION OF THE ANALYTE IN THE SAMPLE
--	NOT ANALYZED
18	RAMP NUMBER

0 30 60

APPROXIMATE SCALE IN FEET

Stantec
25864-F BUSINESS CENTER DRIVE
REDLANDS, CALIFORNIA 92374
PHONE:(909) 335-6116 FAX:(909) 335-6120

FOR:
CALTRANS, DISTRICT 7
Contract: 07A3321
Task Order No. 16
LA-91 PM R 11.32/R20.74
PN: 0714000151-1; EA: 306201

SAMPLE LOCATION MAP
RAMP 18 AND RAMP 19

FIGURE: 9

JOB NUMBER:	DRAWN BY:	CHECKED BY:	APPROVED BY:	DATE:
185831016	STA	AP	KM	12/09/14

FILEPATH:M:_00 OTHER OFFICES\04-REDLANDS\CAL-TRANS\ADL\TO-16_A_FIG 9_TO16_LAKEWOOD WB_ON-RAMP-OFF RAMP.dwg|saguinaldo|Dec 12, 2014 at 11:18|Layout: 11X17 L

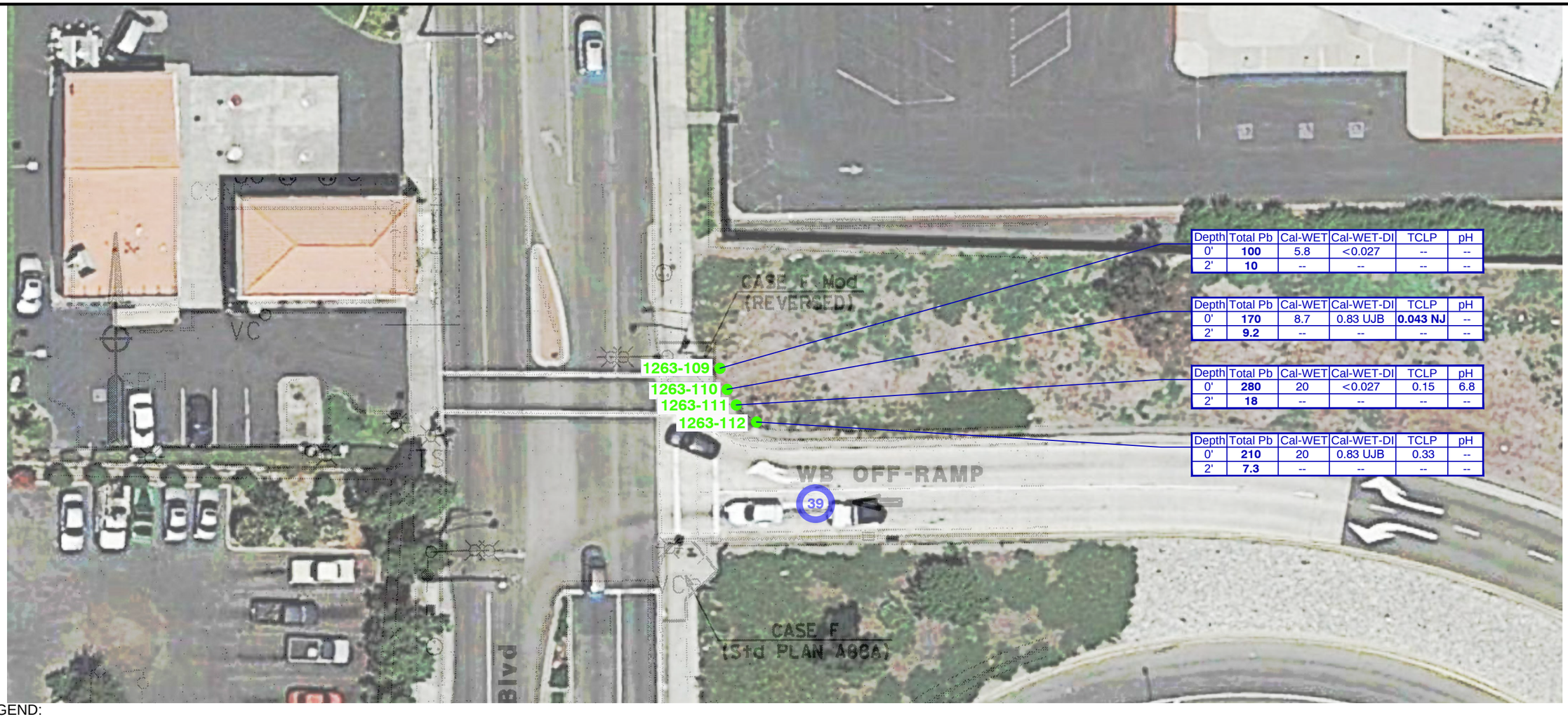

Depth	Total Pb	Cal-WET	Cal-WET-DI	TCLP	pH
0'	**100**	5.8	<0.027	--	--
2'	**10**	--	--	--	--

Depth	Total Pb	Cal-WET	Cal-WET-DI	TCLP	pH
0'	**170**	8.7	0.83 UJB	**0.043 NJ**	--
2'	**9.2**	--	--	--	--

Depth	Total Pb	Cal-WET	Cal-WET-DI	TCLP	pH
0'	**280**	20	<0.027	0.15	6.8
2'	**18**	--	--	--	--

Depth	Total Pb	Cal-WET	Cal-WET-DI	TCLP	pH
0'	**210**	20	0.83 UJB	0.33	--
2'	**7.3**	--	--	--	--

LEGEND:

1263-109 ●	BORING LOCATION
Total Pb	TOTAL LEAD IN MILLIGRAMS PER KILOGRAM (mg/kg)
Cal-WET	SOLUBLE LEAD BY CAL-WET CITRIC IN MILLIGRAMS PER LITER (mg/L)
Cal-WET DI	SOLUBLE LEAD BY CAL-WET DI IN MILLIGRAMS PER LITER (mg/L)
TCLP	SOLUBLE LEAD TOXICITY CHARACTERISTIC LEACHING PROCEDURE (mg/L)
<	ANALYTE NOT REPORTED AT OR ABOVE STATED LABORATORY METHOD DETECTION LIMIT (MDL)
--	NOT ANALYZED
J	THE ANALYTE WAS POSITIVELY IDENTIFIED, THE ASSOCIATED NUMERICAL VALUE IS THE APPROXIMATE CONCENTRATION OF THE ANALYTE IN THE SAMPLE
B	THE ANALYTE WAS DETECTED IN THE METHOD, FIELD AND/OR TRIP BLANK
NJ	THE ANALYSIS INDICATES THE PRESENCE OF AN ANALYTE THAT HAS BEEN "TENTATIVELY IDENTIFIED" AND THE ASSOCIATED NUMERICAL VALUE REPRESENTS ITS APPROXIMATE CONCENTRATION
UJ	THE ANALYTE WAS NOT DETECTED ABOVE THE REPORTED SAMPLE QUANTITATION LIMIT. HOWEVER, THE REPORTED QUANTITATION LIMIT IS APPROXIMATE AND MAY OR MAY NOT REPRESENT THE ACTUAL LIMIT OF QUANTITATION NECESSARY TO ACCURATELY AND PRECISELY MEASURE THE ANALYTE IN THE SAMPLE
39	RAMP NUMBER

0 30 60

APPROXIMATE SCALE IN FEET

Stantec
25864-F BUSINESS CENTER DRIVE
REDLANDS, CALIFORNIA 92374
PHONE:(909) 335-6116 FAX:(909) 335-6120

FOR:
CALTRANS, DISTRICT 7
Contract: 07A3321
Task Order No. 16
LA-91 PM R 11.32/R20.74
PN: 0714000151-1; EA: 306201

SAMPLE LOCATION MAP
RAMP 39

FIGURE: 10

JOB NUMBER:	DRAWN BY:	CHECKED BY:	APPROVED BY:	DATE:
185831016	STA	AP	KM	12/09/14

FILEPATH:M:_00 OTHER OFFICES\04-REDLANDS\CAL-TRANS\ADL\TO-16_A_FIG 10_TO16_NORWALK WB_OFF RAMP.dwg|saguinaldo|Dec 11, 2014 at 17:17|Layout: 11X17 L

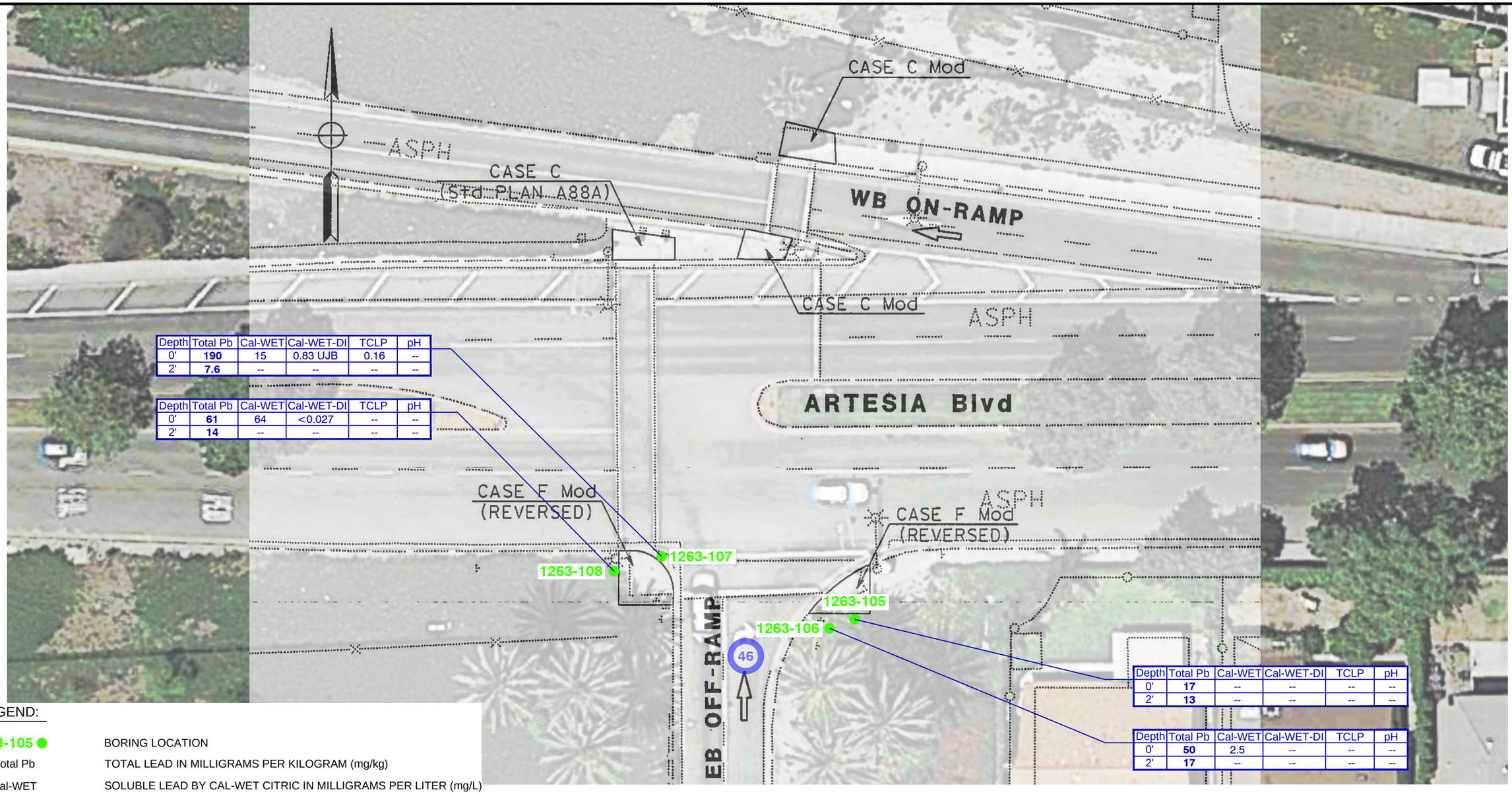

Depth	Total Pb	Cal-WET	Cal-WET-DI	TCLP	pH
0'	**190**	15	0.83 UJB	0.16	--
2'	**7.6**	--	--	--	--

Depth	Total Pb	Cal-WET	Cal-WET-DI	TCLP	pH
0'	**61**	64	<0.027	--	--
2'	**14**	--	--	--	--

Depth	Total Pb	Cal-WET	Cal-WET-DI	TCLP	pH
0'	**17**	--	--	--	--
2'	**13**	--	--	--	--

Depth	Total Pb	Cal-WET	Cal-WET-DI	TCLP	pH
0'	**50**	2.5	--	--	--
2'	**17**	--	--	--	--

LEGEND:

1263-105 ●	BORING LOCATION
Total Pb	TOTAL LEAD IN MILLIGRAMS PER KILOGRAM (mg/kg)
Cal-WET	SOLUBLE LEAD BY CAL-WET CITRIC IN MILLIGRAMS PER LITER (mg/L)
Cal-WET DI	SOLUBLE LEAD BY CAL-WET DI IN MILLIGRAMS PER LITER (mg/L)
TCLP	SOLUBLE LEAD TOXICITY CHARACTERISTIC LEACHING PROCEDURE (mg/L)
<	ANALYTE NOT REPORTED AT OR ABOVE STATED LABORATORY METHOD DETECTION LIMIT (MDL)
--	NOT ANALYZED
J	THE ANALYTE WAS POSITIVELY IDENTIFIED, THE ASSOCIATED NUMERICAL VALUE IS THE APPROXIMATE CONCENTRATION OF THE ANALYTE IN THE SAMPLE
B	THE ANALYTE WAS DETECTED IN THE METHOD, FIELD AND/OR TRIP BLANK
UJ	THE ANALYTE WAS NOT DETECTED ABOVE THE REPORTED SAMPLE QUANTITATION LIMIT. HOWEVER, THE REPORTED QUANTITATION LIMIT IS APPROXIMATE AND MAY OR MAY NOT REPRESENT THE ACTUAL LIMIT OF QUANTITATION NECESSARY TO ACCURATELY AND PRECISELY MEASURE THE ANALYTE IN THE SAMPLE
46	RAMP NUMBER

0 30 60

APPROXIMATE SCALE IN FEET

Stantec
25864-F BUSINESS CENTER DRIVE
REDLANDS, CALIFORNIA 92374
PHONE:(909) 335-6116 FAX:(909) 335-6120

FOR:
CALTRANS, DISTRICT 7
Contract: 07A3321
Task Order No. 16
LA-91 PM R 11.32/R20.74
PN: 0714000151-1; EA: 306201

SAMPLE LOCATION MAP
RAMP 46

FIGURE: 11

JOB NUMBER:	DRAWN BY:	CHECKED BY:	APPROVED BY:	DATE:
185831016	STA	AP	KM	12/09/14

FILEPATH:M:_00 OTHER OFFICES\04-REDLANDS\CAL-TRANS\ADL\TO-16_A_FIG 11_TO16_ARTESIA WB_ON RAMP-OFF RAMP.dwg|saguinaldo|Dec 12, 2014 at 11:00|Layout: 11X17 L

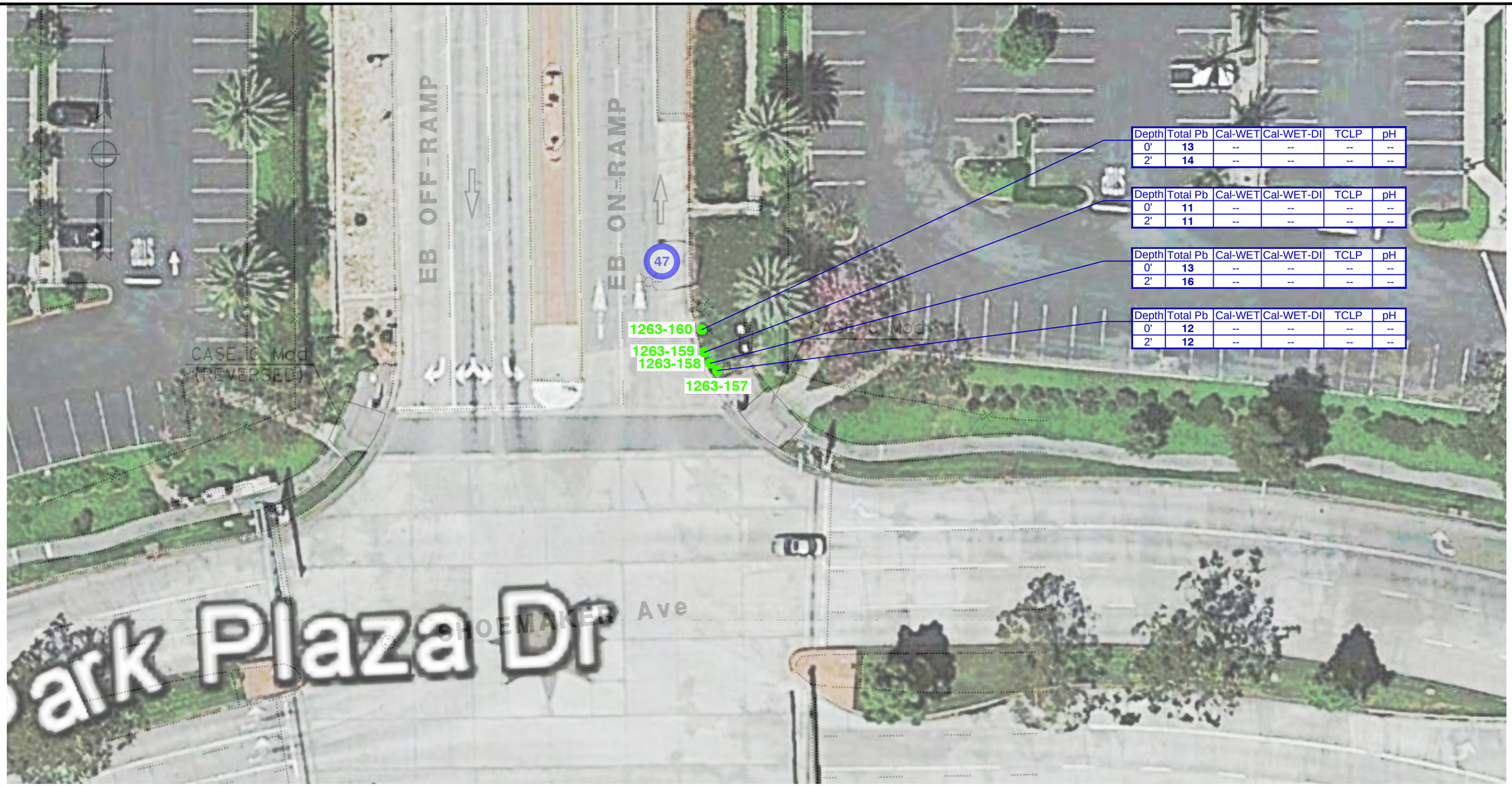

Depth	Total Pb	Cal-WET	Cal-WET-DI	TCLP	pH
0'	**13**	--	--	--	--
2'	**14**	--	--	--	--

Depth	Total Pb	Cal-WET	Cal-WET-DI	TCLP	pH
0'	**11**	--	--	--	--
2'	**11**	--	--	--	--

Depth	Total Pb	Cal-WET	Cal-WET-DI	TCLP	pH
0'	**13**	--	--	--	--
2'	**16**	--	--	--	--

Depth	Total Pb	Cal-WET	Cal-WET-DI	TCLP	pH
0'	**12**	--	--	--	--
2'	**12**	--	--	--	--

LEGEND:

1263-157 ●	BORING LOCATION
Total Pb	TOTAL LEAD IN MILLIGRAMS PER KILOGRAM (mg/kg)
Cal-WET	SOLUBLE LEAD BY CAL-WET CITRIC IN MILLIGRAMS PER LITER (mg/L)
Cal-WET DI	SOLUBLE LEAD BY CAL-WET DI IN MILLIGRAMS PER LITER (mg/L)
TCLP	SOLUBLE LEAD TOXICITY CHARACTERISTIC LEACHING PROCEDURE (mg/L)
<	ANALYTE NOT REPORTED AT OR ABOVE STATED LABORATORY METHOD DETECTION LIMIT (MDL)
--	NOT ANALYZED
47	RAMP NUMBER

0 30 60

APPROXIMATE SCALE IN FEET

Stantec
25864-F BUSINESS CENTER DRIVE
REDLANDS, CALIFORNIA 92374
PHONE:(909) 335-6116 FAX:(909) 335-6120

FOR:
CALTRANS, DISTRICT 7
Contract: 07A3321
Task Order No. 16
LA-91 PM R 11.32/R20.74
PN: 0714000151-1; EA: 306201

SAMPLE LOCATION MAP
RAMP 47

FIGURE: 12

JOB NUMBER:	DRAWN BY:	CHECKED BY:	APPROVED BY:	DATE:
185831016	STA	AP	KM	12/09/14

FILEPATH:M:_00 OTHER OFFICES\04-REDLANDS\CAL-TRANS\ADL\TO-16_A_FIG 12_TO16_PARK PLAZA EB_ON RAMP-OFF RAMP.dwg|saguinaldo|Dec 12, 2014 at 13:22|Layout: 11X17 L

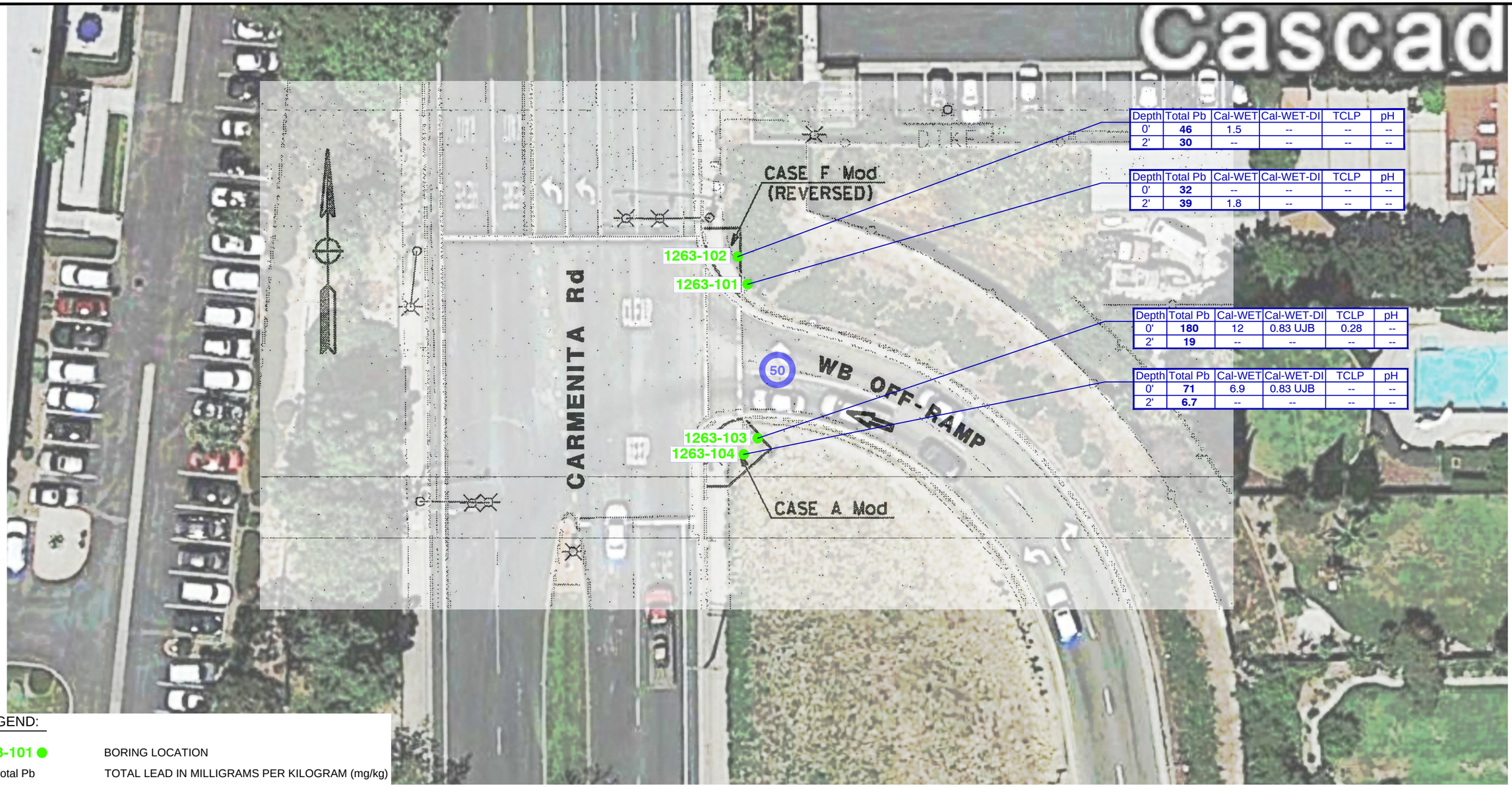

Depth	Total Pb	Cal-WET	Cal-WET-DI	TCLP	pH
0'	**46**	1.5	--	--	--
2'	**30**	--	--	--	--

Depth	Total Pb	Cal-WET	Cal-WET-DI	TCLP	pH
0'	**32**	--	--	--	--
2'	**39**	1.8	--	--	--

Depth	Total Pb	Cal-WET	Cal-WET-DI	TCLP	pH
0'	**180**	12	0.83 UJB	0.28	--
2'	**19**	--	--	--	--

Depth	Total Pb	Cal-WET	Cal-WET-DI	TCLP	pH
0'	**71**	6.9	0.83 UJB	--	--
2'	**6.7**	--	--	--	--

LEGEND:

1263-101 ●	BORING LOCATION
Total Pb	TOTAL LEAD IN MILLIGRAMS PER KILOGRAM (mg/kg)
Cal-WET	SOLUBLE LEAD BY CAL-WET CITRIC IN MILLIGRAMS PER LITER (mg/L)
Cal-WET DI	SOLUBLE LEAD BY CAL-WET DI IN MILLIGRAMS PER LITER (mg/L)
TCLP	SOLUBLE LEAD TOXICITY CHARACTERISTIC LEACHING PROCEDURE (mg/L)
<	ANALYTE NOT REPORTED AT OR ABOVE STATED LABORATORY METHOD DETECTION LIMIT (MDL)
--	NOT ANALYZED
J	THE ANALYTE WAS POSITIVELY IDENTIFIED, THE ASSOCIATED NUMERICAL VALUE IS THE APPROXIMATE CONCENTRATION OF THE ANALYTE IN THE SAMPLE
B	THE ANALYTE WAS DETECTED IN THE METHOD, FIELD AND/OR TRIP BLANK
UJ	THE ANALYTE WAS NOT DETECTED ABOVE THE REPORTED SAMPLE QUANTITATION LIMIT. HOWEVER, THE REPORTED QUANTITATION LIMIT IS APPROXIMATE AND MAY OR MAY NOT REPRESENT THE ACTUAL LIMIT OF QUANTITATION NECESSARY TO ACCURATELY AND PRECISELY MEASURE THE ANALYTE IN THE SAMPLE
50	RAMP NUMBER

0 30 60

APPROXIMATE SCALE IN FEET

Stantec
25864-F BUSINESS CENTER DRIVE
REDLANDS, CALIFORNIA 92374
PHONE:(909) 335-6116 FAX:(909) 335-6120

FOR:
CALTRANS, DISTRICT 7
Contract: 07A3321
Task Order No. 16
LA-91 PM R 11.32/R20.74
PN: 0714000151-1; EA: 306201

SAMPLE LOCATION MAP
RAMP 50

FIGURE: 13

JOB NUMBER:	DRAWN BY:	CHECKED BY:	APPROVED BY:	DATE:
185831016	STA	AP	KM	12/09/14

FILEPATH:M:_00 OTHER OFFICES\04-REDLANDS\CAL-TRANS\ADL\TO-16_A_FIG 13_TO16_CARMENITA WB_OFF RAMP.dwg|saguinaldo|Dec 11, 2014 at 17:05|Layout: 11X17 L

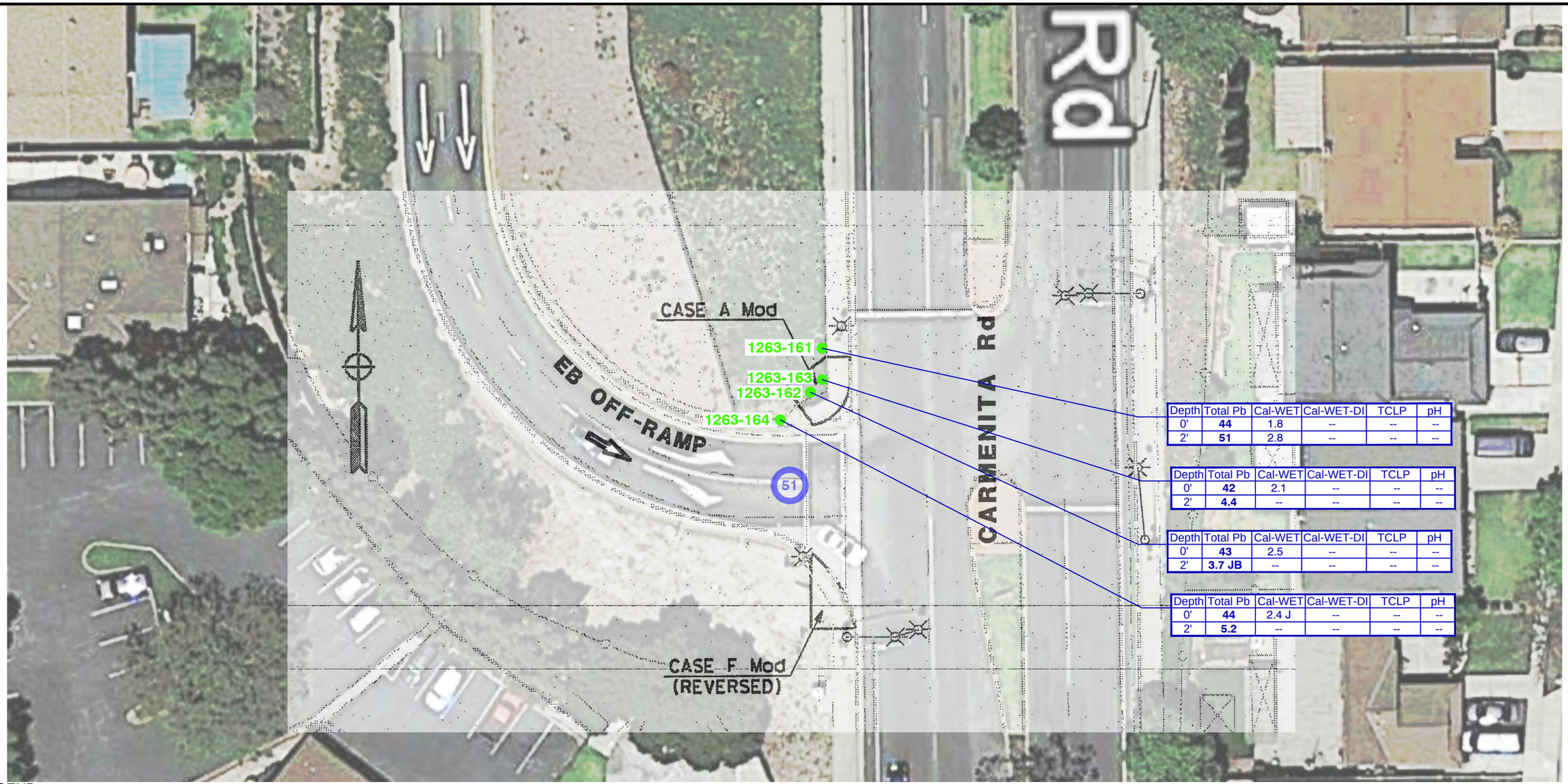

Depth	Total Pb	Cal-WET	Cal-WET-DI	TCLP	pH
0'	**44**	1.8	--	--	--
2'	**51**	2.8	--	--	--

Depth	Total Pb	Cal-WET	Cal-WET-DI	TCLP	pH
0'	**42**	2.1	--	--	--
2'	**4.4**	--	--	--	--

Depth	Total Pb	Cal-WET	Cal-WET-DI	TCLP	pH
0'	**43**	2.5	--	--	--
2'	**3.7 JB**	--	--	--	--

Depth	Total Pb	Cal-WET	Cal-WET-DI	TCLP	pH
0'	**44**	2.4 J	--	--	--
2'	**5.2**	--	--	--	--

LEGEND:

1263-161 ●	BORING LOCATION
Total Pb	TOTAL LEAD IN MILLIGRAMS PER KILOGRAM (mg/kg)
Cal-WET	SOLUBLE LEAD BY CAL-WET CITRIC IN MILLIGRAMS PER LITER (mg/L)
Cal-WET DI	SOLUBLE LEAD BY CAL-WET DI IN MILLIGRAMS PER LITER (mg/L)
TCLP	SOLUBLE LEAD TOXICITY CHARACTERISTIC LEACHING PROCEDURE (mg/L)
<	ANALYTE NOT REPORTED AT OR ABOVE STATED LABORATORY METHOD DETECTION LIMIT (MDL)
--	NOT ANALYZED
J	THE ANALYTE WAS POSITIVELY IDENTIFIED, THE ASSOCIATED NUMERICAL VALUE IS THE APPROXIMATE CONCENTRATION OF THE ANALYTE IN THE SAMPLE
B	THE ANALYTE WAS DETECTED IN THE METHOD, FIELD AND/OR TRIP BLANK
51	RAMP NUMBER

0 30 60

APPROXIMATE SCALE IN FEET

Stantec
25864-F BUSINESS CENTER DRIVE
REDLANDS, CALIFORNIA 92374
PHONE:(909) 335-6116 FAX:(909) 335-6120

FOR:
CALTRANS, DISTRICT 7
Contract: 07A3321
Task Order No. 16
LA-91 PM R 11.32/R20.74
PN: 0714000151-1; EA: 306201

SAMPLE LOCATION MAP
RAMP 51

FIGURE: 14

JOB NUMBER:	DRAWN BY:	CHECKED BY:	APPROVED BY:	DATE:
185831016	STA	AP	KM	12/09/14

FILEPATH:M:_00 OTHER OFFICES\04-REDLANDS\CAL-TRANS\ADL\TO-16_A_FIG 14_TO16_CARMENITA EB_OFF RAMP.dwg|saguinaldo|Dec 12, 2014 at 12:24|Layout: 11X17 L

SMART CUSHION INNOVATIONS™

The World's Only Speed-Dependent Crash Attenuators

The Smart Cushion Innovations (SCI) crash attenuator is a revolutionary, speed-dependent product that varies stopping resistance during an impact. The Smart Cushion Innovations (SCI) crash attenuator allows lighter and slower-moving vehicles to have longer ridedown distances and lower ridedown G forces.

Unlike fixed-resistance attenuators, the Smart Cushion Innovations (SCI) attenuator does not reach maximum stopping resistance unless a vehicle is traveling at the maximum design speed. This fully redirective, non-gating, bi-directional, impact attenuator was designed for maximum safety and reusability, as well as outstanding durability before, during and after an impact.

The SCI is the only attenuator with a reverse-tapered design to eliminate side panel stress during a collapse. It also has an extremely low angle of exit on side impacts (<1°) to keep vehicles from rebounding back into traffic and causing secondary accidents. This is the lowest angle of exit for any redirective attenuator on the market.

How It Works

The hydraulic porting of the attenuator ensures that the proper resistance is used to stop the vehicle before it reaches the end of the cushion's usable length.

The SCI was specifically designed for durability and resetability to enable resets to be performed in less than one hour. After a frontal impact, an experienced crew can perform the two-stage reset in less than 45 minutes. Side impacts within NCHRP 350 specifications should not damage the attenuator.

After an impact, the cushion requires a dual-stage pull-out with the replacement of two 1/4" shear bolts. The crash attenuator requires a minimal inventory of spare parts because of the new side panels' durability and the normal requirement of only two shear bolts on the frontal impact reset. Minimal damage means quick resetting and reduced worker exposure to traffic, as well as lower costs for traffic control, replacement parts and labor.

Ready To Install

SCI attenuators come fully assembled for a pick-and-set install. A typical installation can be performed in less than 1-1/2 hours. The units require no backstops for permanent or temporary construction applications.

NCHRP 350 Test Results

All NCHRP 350 tests were performed on the same unit in four consecutive days. All tests showed outstanding results for ridedown G forces and low angle of exit. There were no replacement parts required prior to the next test except for shear bolts.

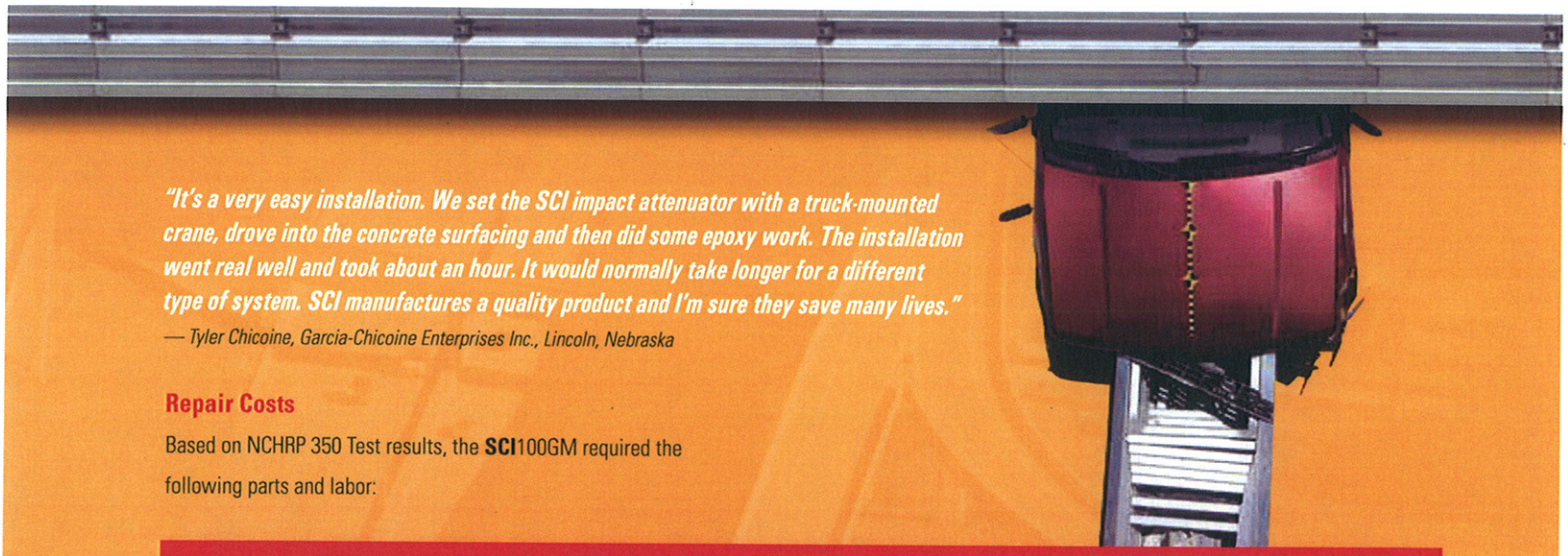

"It's a very easy installation. We set the SCI impact attenuator with a truck-mounted crane, drove into the concrete surfacing and then did some epoxy work. The installation went real well and took about an hour. It would normally take longer for a different type of system. SCI manufactures a quality product and I'm sure they save many lives."

— Tyler Chicoine, Garcia-Chicoine Enterprises Inc., Lincoln, Nebraska

Repair Costs

Based on NCHRP 350 Test results, the **SCI**100GM required the following parts and labor:

NCHRP 350 TEST LEVEL III REPAIR RESULTS	Part Names	Cost	Repair Hrs.	Cost	Total Cost
#3-31 2000 kg vehicle 0 degree frontal impact at 102 km/h	2 – Shear Bolts	$1	2 man hours	$80	$81
#3-32 820 kg vehicle 15 degree frontal impact at 101 km/h	2 - Shear Bolts	$1	2 man hours	$80	$81
#3-33 2000 kg vehicle 15 degree frontal impact at 101 km/h	2 - Shear Bolts	$1	2 man hours	$80	$81
#3-37 2000 kg vehicle 20 degree side impact at 99 km/h	0	$0	0	$0	$0
#3-39 2000 kg vehicle 20 degree rev. side impact at 99 km/h	0	$0	0	$0	$0

Test Levels Available

The **SCI**70GM is our Test Level 2 (45 MPH) attenuator and the **SCI**100GM is our Test Level 3 (62 MPH) attenuator. Both attenuators can protect a wide range of hazards including bridges, median barriers and highway signs.

The first speed-dependent, variable-resistance attenuator that can ramp resistance up or down to provide the smoothest ridedown of any system on the market.

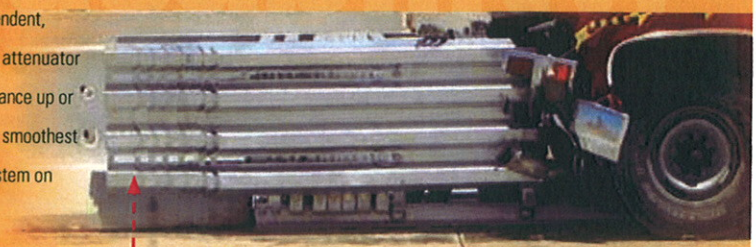

*"The **SCI**100GM unit has experienced three hits in a very short period. The first was well above the NCHRP 350 criteria. The crash used every bit of the capacity the unit has and I believe the driver survived because of the performance of the unit in extreme circumstances. The next two hits were within the NCHRP 350 criteria and the unit functioned as designed with very little repair cost. As we gain experience in resetting units, the job can be accomplished in less than 30 minutes for a majority of hits. Damage to the unit for the last two hits was limited to the shear pins and the chevron plate."*

— Ron Jones, Trafficade Services Inc., Phoenix, Arizona

Features

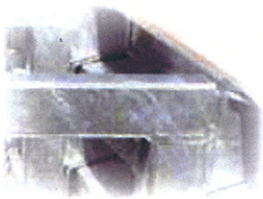

Support Gussets.
Gussets located behind the panels reduce gap formation and deformation to prevent snagging on reverse side impacts.

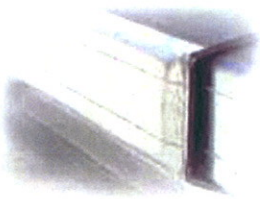

Stronger Side Panel.
Our panels are over 90% stronger than curved profiles. The profile allows the edges to be beveled, reducing the potential for snagging and damage on reverse-direction impacts. The panel also smoothly redirects vehicles on side impacts. The side panel is fabricated from 10-gauge, 60-ksi, minimum-yield steel with a G90 galvanized coating.

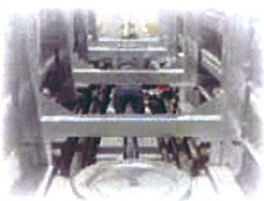

Cable & Cylinder System.
This system allows longer ridedown distances for smaller vehicles, as well as smoother ridedown with lower G forces for all vehicles. The cylinder's hydraulic porting assures a controlled ridedown by applying the necessary resistance required based on the speed of the vehicle.

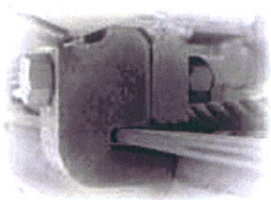

Side Guide Design.
This new design withstands side impacts with no damage. It also allows individual replacement of the support frames.

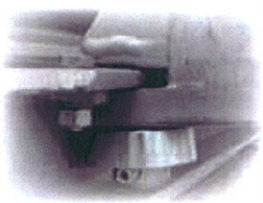

Front Rollers.
The roller guide design on the front sled produces a smooth, aligned collapse by reducing friction and binding.

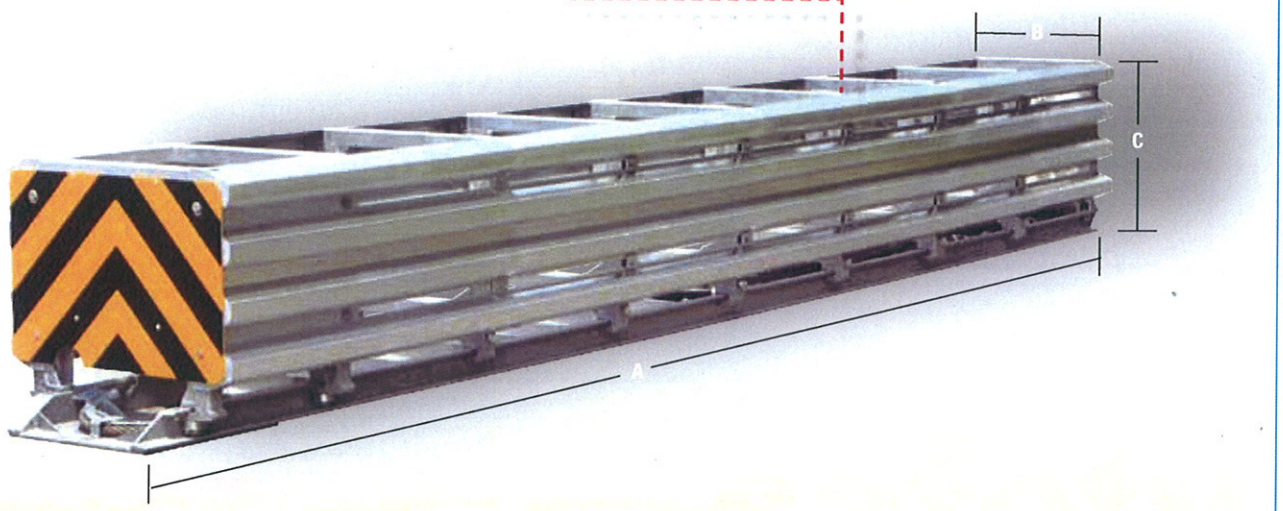

SCI Dimensions	Test Level 2	Test Level 3
A	13' 6"	21' 6"
B	24"	24"
C	34"	34"
Weight	2470 lbs.	3450 lbs.

Weights are for attenuators only

SMART CUSHION INNOVATIONS™
Highlights

Safety Benefits

- Variable force (speed-dependent), not fixed force, provides consistent deceleration during ridedown.
- Longer ridedown distances and lower sustained G forces for lighter or slower-moving vehicles.
- Low angle of exit on side impacts (<1°) to keep vehicle from deflecting back into traffic.
- Quick and easy resetting for reduced worker exposure to traffic.
- Reduced out-of-service time to maximize highway safety.

Cost Benefits

- Minimal replacement parts requirement reduces spare parts inventory and parts costs.
- Quick, easy resetting reduces labor and traffic control costs.
- The new, reverse-tapered design eliminates side panel stress on frontal impacts to reduce damage and system fatigue from multiple impacts.
- Low life cycle cost benefits increase dramatically as impacts occur.

About Work Area Protection Corporation

Work Area Protection Corporation is the international leader in traffic control devices and work zone safety products. Since 1969, we have been meeting customer needs and exceeding quality standards with a wide range of highway and construction safety products. We back those products with knowledgeable, personalized customer service and strong distributor support.

Part No.	Description	Weight
Attenuators		
9400	**SCI**100GM Attenuator 24" wide w/Concrete Anchors Test Level 3	3500 lbs.
9450	**SCI**100GM Attenuator 24" wide w/Asphalt Anchors Test Level 3	3575 lbs.
9451	**SCI**70GM Attenuator 24" wide w/Concrete Anchors Test Level 2	2500 lbs.
9452	**SCI**70GM Attenuator 24" wide w/Asphalt Anchors Test Level 2	2550 lbs.
Anchor Kits		
9401	Concrete Anchor Kit for **SCI**100GM	
9402	Asphalt Anchor Kit for **SCI**100GM	
9453	Concrete Anchor Kit for **SCI**70GM	
9454	Asphalt Anchor Kit for **SCI**70GM	
Accessories		
9406	Shear Bolt	
9424	Delineator Panel Yellow Test Level 3	
9456	Delineator Panel Yellow Test Level 2	
9439	Epoxy 22 oz. Cartridge Required for Attenuator Part No. 9400=4/9450=12/9451=3/9452=9	
9440	Nozzle Epoxy Mixing – 1 nozzle required per cartridge	
9444	Spare Parts Kit Test Level 3	
9458	Spare Parts Kit Test Level 2	
Transitions		
9431	Transition 24" Jersey Barrier - Right (viewed from front)	
9432	Transition 24" Jersey Barrier - Left (viewed from front)	
9433	Transition 24" Concrete - Left & Right	

Call for other transition design availability

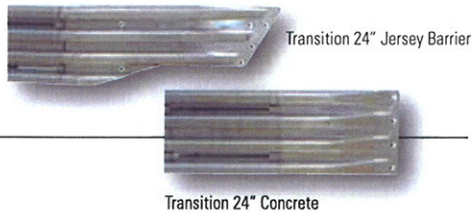

Transition 24" Jersey Barrier

Transition 24" Concrete

Disclaimer

This product is only intended for use as a redirective impact attenuator. Installations must be performed according to manufacturer's specification. Improper installations, modifications or unintended use creates a hazardous condition that can cause personal injury, property damage or death. Any modification or unintended use of this product shall immediately void all manufacturers' warranties. SCI Products Inc. disclaims all liability for injuries to persons or property resulting from any modifications to, unintended use of or unspecified installation of this product.

Designs are subject to change without notice.
SMART CUSHION INNOVATIONS is a trademark of SCI Products Inc.
PATENT PENDING.

SCI Products Inc.

Permanent Message Boards • Attenuators • Speed Awareness Products • LED Signals • Advanced Warners

Work Area Protection Corp.
P.O. Box 4087 • 2500 Production Drive • St. Charles, IL 60174-9081
Phone: 630.377.9100 • **Orders: 800.327.4417** • Fax: 630.377.9270
Web: www.workareaprotection.com

Member ATSSA

Distributed by:

©2005 SCI Products Inc.

SMART CUSHION INNOVATIONS
SCI100GM
General Specifications

DESCRIPTION:

The SCI100GM is a redirective, non-gating crash attenuator that consists of a base, supporting frames, a sled, side panels, a wire rope cable, sheaves and a shock arresting cylinder. The base is anchored to the mounting surface and provides support for the frames that are mounted on it. The support frames hold the side panels that provide an outer flat redirective surface for side impacts. The sled provides redirective support for side impacts and deceleration force for frontal impacts. It is designed for 24" applications. The SCI100GM telescopes rearward upon frontal impact and can be reset with minimal repair parts. It is NCHRP 350 Test Level 3 approved.

MATERIALS:

SCI100GM Impact Attenuator component parts shall meet the following requirements:

A. **Shock Arresting Cylinder.** The cylinder shall be specially designed for different Test Levels and filled with an environmentally friendly, fire-resistant hydraulic fluid that will perform to a minimum saturated pour point temperature of -37 degrees C. (-35 degrees F.). The Shock Arresting Cylinder shall be a metered hydraulic cylinder that has internal ports engineered to reduce the speed of the vehicle to a predefined rate that is dependent on a combination of speed and mass. It translates its resistance (force) to the cable that is attached to the sled.

B. **Cable.** The wire rope cable shall be a 28.6mm (1.125") 6 x 3 IWRC galvanized wire rope cable with a breaking strength of 58.96 metric tons (65 tons). It shall be attached to the sled with an Open Spelter Socket that has a 100% efficiency rating. It shall be reaved around the Shock Arresting Cylinder and terminated to the base with 4 wire rope clips.

C. **Base.** The base shall be manufactured from 20.5kg/m (13.8lb/ft) steel channel. It shall include all cross bracing necessary to sustain its design criteria impacts without damage.

D. **Side Panels**. The side panels shall be manufactured from ASTM A1011 Grade 60 Steel with an ASTM653 galvanized coating. The outer surface shall have four flat flutes to provide a substantial redirective bearing surface for side impacts. The outer trailing edge overlaps shall be formed to create a bend toward the inner panel to reduce snag potential on reverse side impacts. The angle of the outer flat surface to the flat side return wall shall be 19 – 22 degrees which provides an optimized angle for maximum rigidity to minimize damage and snag potential on side impacts. The outside trailing edge shall be longitudinally shorter than the inside trailing edge to produce a minimum of a 23 degree taper giving the attachment bolts more surface to hold the panels on the support frames with no overlap past the rear edge of the support frames to reduce snagging on reverse impacts.

E. **Support Frames.** The support frames shall be fabricated out of 63.5mm x 63.5mm x 4.7mm (2.5" x 2.5" x .187") tubular steel. The support frames provide a structure to mount and support the side panels. They will include outboard gussets to support the top and bottom panel flute to eliminate panel fold over at both locations caused by side impacts. They shall be attached to the base by the side guides using a 1" diameter Grade 8 bolt which allows the frames to slide longitudinally upon frontal impacts. The frames shall be designed to be individually replaced without removing other frames.

F. **Front Sled.** The front sled shall be fabricated out of 63.5mm x 63.5mm x 4.7mm (2.5" x 2.5" x .187") tubular steel. It shall have diagonal bracing to minimize distortion on angled hits, support impact of different vehicle heights, and transfer stopping force to the Spelter Socket attachment. The sled shall have four guide rollers to eliminate wedging on angled front impacts.

G. **Transition Panels.** The transition panels shall be manufactured from ASTM A1011 Grade 60 Steel with an ASTM123 galvanized coating. Three standard transition panels shall be available. These shall be: SCI100GM to Jersey Barrier, SCI100GM to Thrie Beam, and SCI100GM Concrete Transition (for vertical surfaces). Drawings are available for the Thrie Beam transition to be used with Thrie and W Beam Guardrail.

H. **Delineator Plate and Reflectorization.** The front delineator plate shall be supplied in the color specified by the state or, if no color is specified, it shall be yellow. Reflectorization shall be in accordance with state requirements.

I. **Metal Work.** All metal work, except side and transition panels, shall be fabricated from ASTM A36 steel. After fabrication, all metal work shall be hot dip galvanized in accordance with ASTM A123. Welding shall be performed by welders certified per AWS3G.

J. **Fasteners.** All bolts shall be American-made Standard Regular Bolts, unless indicated otherwise in the specification. Anchor bolts shall be anchored using an epoxy with an ultimate pullout load rating of 14,695kg (32,397 lbs) and ultimate shear load rating of 10,644 kg (23,467 lbs).

CONSTRUCTION DETAILS:

The SCI100GM shall be built either on existing concrete pad minimum 150 mm (6") deep or existing 150 mm (6") minimum asphalt (type 6 or 7) over 150 mm (6") minimum compacted subbase (minimum 95% of maximum theoretical density) or existing 150 mm (6") minimum asphalt (type 6 or 7) over 76 mm (3") minimum concrete . If new installation is necessary, then the preferred foundation would be a 150 mm (6") reinforced concrete pad per manufacturer's instructions.

Anchors shall be set into holes drilled with rotary impact drills, approved by the Engineer, of the sizes recommended by the manufacturer of the attenuator.

The SCI100GM shall be bolted in place in accordance with the attenuator manufacturer's instructions, but no sooner than seven days after placement of fresh concrete, without accelerators, and no sooner than three days after placement of concrete which has been batched with an approved accelerator.

If a transition is required, the appropriate manufacturer's standard transition shall be used.

Traffic protection devices, such as cones, drums, lights, signs, barricades, or other articles directed by the Engineer, shall be provided and maintained under their respective items. Those devices shall not be removed until the SCI100GM Impact Attenuator is fully operational and, in lighted areas or areas to be lighted, these articles shall also be maintained until the lighting system is operational.

QUALITY CONTROL:

1. All steel shall be fabricated from the specified material that is called out on the fabrication drawings.
2. All welding shall be performed by welders certified per AWS3G.
3. Material certifications shall be required from all vendors.
4. All attenuators shall be fabricated from the drawings of the NCHRP 350 tested unit.

TESTING AND CERTIFICATION:

The SCI100GM has passed all required tests and is certified for NCHRP 350 Test Level III. The letter of approval from the Federal Highway Administration is dated September 12, 2003 and has a designation of HSA-10/CC-85.

PERFORMANCE:

1. The SCI100GM is designed to meet the Test Level 3 performance criteria of the NCHRP 350 for redirective, non-gating crash cushions including, but not limited to, Occupant Risk Criteria and Redirective Criteria.
2. After impacts that are within the design parameters of vehicle mass and speed, the SCI100GM should not require the replacement of parts except for the Nose Plate and Mobile Sheave Shear Bolts. Side impacts may only require an inspection with no repair parts necessary.
3. Upon side impacts, vehicle exit angles should be <1 degree.

DIMENSIONS:

Width (Effective) ----------	24" (610mm)
Length ----------	21.5' (6.55m)
Height ----------	33" (838mm)
Weight ----------	3450 lb (1565kg)

SCI Products Inc.

SCI70GM AND SCI100GM DESIGN AND INSTALLATION MANUAL

The World's Only

Speed-Dependent

Crash Attenuator

SMART CUSHION INNOVATIONS®

NCHRP 350 Approved

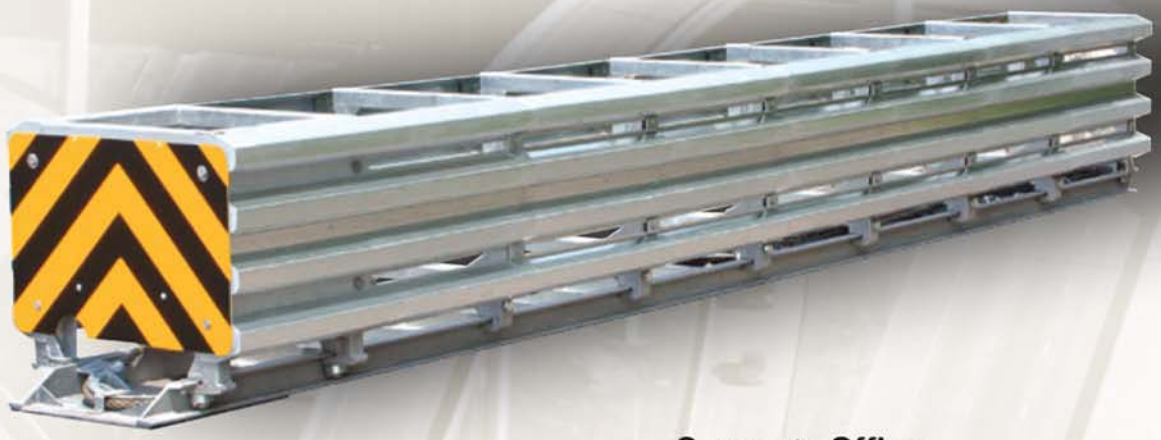

Corporate Office:
2500 Production Drive
St. Charles, IL 60174
Telephone: 800-327-4417
www.workareaprotection.com

WORK AREA PROTECTION CORP. EST. 1969

Work Area Protection

TABLE OF CONTENTS

OVERVIEW 1

Product 1
Maintenance 1
Crash Performance 1

SPECIFICATIONS 2

Description 2
System Dimensions & Weight 2

DESIGN CRITERIA 2

General 2
Foundations 2
Support Structure 3
Location 3
Transition Design 3

INSTALLATION 6

Installation & Performance Statements 6
Safety 6
Equipment List ..... Appendix B
Site Preparation 6
Foundations 6
Placement of Crash Cushion 7
Anchor Installation 7
Delineator Panel Attachment 8
Transition Installation 8
Final Inspection 9

RESETTING CRASH CUSHION AFTER IMPACT 9

Site Preparation 9
Re-Extension & Inspection After Frontal Impact 9
Side Impact Inspection & Repair 10
Cable Inspection Procedure 11
Cylinder Inspection 11
Anchor Bolt Inspection 11
Side Panel Inspection 11
Side Guide Inspection 12
Final Inspection 12
Non-Repairable Impacts 12

APPENDIXES

SCI ATTENUATOR PARTS LIST ..... A

EQUIPMENT LIST ..... B

ATTENUATORS

SMART CUSHION®, TEST LEVEL 2 C
SMART CUSHION®, TEST LEVEL 3. ..... D

FOUNDATIONS

Test Level 2 Foundation E1
Test Level 3 Foundation E2

LAYOUTS

Gore Assembly ..... F
Gore Assembly Calculations F3

TRANSITIONS

Jersey/F Shape Barrier ..... G
Concrete Block, 24 Inch *(610 mm)* ..... H
Concrete Block, 30 Inch *(762 mm)* I
Concrete Block, 36 Inch *(915 mm)* ..... J
Concrete Block, 30 Inch (762 mm), Flared ..... K
Concrete Block, 36 Inch *(915 mm)*, Flared L
Thrie-Beam ..... M
W-Beam (Reverse Direction Traffic Design) ..... N
Jersey/F Shape, Variable Width Base ..... O
Median Barrier, Single Slope ..... P
W-Beam 28 Inch Tall (no reverse direction traffic design) ..... Q
W-Beam 32 Inch Tall (no reverse direction traffic design) ..... R
Wide Block Spanner ..... S

OVERVIEW

Product

The SMART CUSHION® impact attenuators are manufactured by SCI Products, Inc./Work Area Protection Corp. They are NCHRP Report 350, Test Levels 2 and 3 (TL2 and TL3) compliant (Models SCI 70 GM and SCI 100 GM, respectively) and are fully redirective, non-gating, and bi-directional. SMART CUSHION® impact attenuators are used to help protect motorists from hazards in both permanent and work zone locations. They can be attached to most types of median and roadside barriers.

The SMART CUSHION® attenuators use a patented system for stopping vehicles. The system is speed dependent and stops small and large vehicles by automatically regulating the stopping force exerted on a vehicle. Essentially, the system provides the necessary forces based on the speed of the vehicle automatically compensating for the mass of the vehicle.

The SMART CUSHION® attenuators are slightly tapered from front to rear. This allows the side panel sections to collapse over the next section without stress or damage. During collapse, the parts move freely past each other and do not become wedged during the impact.

Wide temperature variations and temperature extremes do not affect the performance of SMART CUSHION® impact attenuators. Temperature driven changes in viscosity of the fluid in the shock-arresting cylinder does not affect performance.

Maintenance

SMART CUSHION® impact attenuators are low-maintenance units. In a two-year in-service evaluation report submitted to the Federal Highway Administration, the average cost of parts to repair the SMART CUSHION® impact attenuator was $39, excluding two catastrophic impacts. More than four out of five of the reported repairs only required two shear bolts costing under $2. A trained, two-person maintenance crew can return most impacted SMART CUSHION® attenuators to full service within 30 minutes. This short repair time reduces the maintenance workers' exposure to traffic and minimizes motorist inconvenience. Side impacts usually result in no damage to the impact attenuator.

Crash Performance

The SMART CUSHION® impact attenuator broke new ground during NCHRP Report 350 crash testing. In the high-speed test, 100 kilometers per hour (63 miles per hour), the small vehicle's deceleration rate was significantly lower than any previously recorded value (-9.8 G's as compared to previous low of –13.4 G's). This means less impact forces on the vehicle's occupants and a reduced risk of injury and severity.

All the tests were conducted on the same SMART CUSHION® unit over four consecutive days with no damage to non-expendable parts. The only parts replaced after each crash test were the two shear bolts, costing less than $2 for each reset.

SPECIFICATIONS

Description

The SMART CUSHION® is a re-directive, non-gating crash attenuator that consists of a base, supporting frames, a sled, side panels, a wire rope cable, sheaves, and a shock-arresting cylinder. The base is anchored to the mounting surface and provides support for the frames that are mounted on it. The support frames hold the side panels that provide a flat outer redirective surface for side impacts. The sled provides redirective support for side impacts and deceleration force for frontal impacts. The SMART CUSHION® telescopes rearward upon frontal impact and can be reset with minimal repair parts. It is NCHRP 350 approved at Test Levels 2 and 3.

System Dimensions & Weight

Table 2 – Dimensions & Weight

	SCI 70 GM	SCI 100 GM
Width	24 inch (610 mm)	24 inch (610 mm)
Length	13 ½ feet (4115 mm)	21 ½ feet (6550 mm)
Height	33 inch (840 mm)	33 inch (840 mm)
Weight	2465 lbs. (1120 kg)	3450 lbs. (1570 kg)
NCHRP 350, Test Level	2	3

DESIGN CRITERIA

General

SMART CUSHION® impact attenuators comply with NCHRP Report 350, TL2 and TL3, and are designed for work zone and permanent applications.

Foundations

Foundations must be a flat surface with longitudinal and cross slopes of 10:1 (horizontal: vertical) or less. SMART CUSHION® impact attenuators should not be located over drainage basins or expansion joints. Portland cement concrete foundation pads are preferred for permanent installations; asphaltic concrete foundation pads are appropriate for work zone installations.

The following table describes the foundations that may be used. See Appendices for drawings.

Table 1 – Foundations

Pad Material and Thickness	Anchor Embedment
6 inch (150 mm) reinforced PCC [1]	5 ½ inch (140 mm)
8 inch (205 mm) non-reinforced PCC	5 ½ inch (140 mm)
3 inch (75 mm) AC [2,3] over 3 inch (75 mm) non-reinforced PCC	16 ½ inch (420 mm)
6 inch (150 mm) AC over compacted subgrade [3]	16 ½ inch (420 mm)
8 inch (205 mm) AC [3]	16 ½ inch (420 mm)

Notes: 1. Portland cement concrete 2. Asphaltic concrete 3. Minimum compaction: 95% of optimal

Concrete compressive strength shall be 4000 psi (28 MPa) at 28 days.

Foundation lengths may vary when using wide transitions.

Support Structure

SMART CUSHION® impact attenuators are self-supporting and do not require an additional support structure.

Location

The SMART CUSHION® impact attenuator's location determines its position and transition requirements.

1. Approach Zone – SMART CUSHION® impact attenuators should not be placed directly behind raised curbs that exceed 4 inches in height. The longitudinal and cross slopes in front of the device should not exceed 10:1 (horizontal: vertical).
2. Barrier Width – SMART CUSHION® impact attenuators are 24 inch (610 mm) wide at the rear. Barriers 24 inch (610 mm) wide, or less, can be shielded without using a transition if there is no reverse direction traffic. Barriers that are wider than 24 inch (610 mm) and/or have reverse direction traffic require a transition, available from Work Area Protection Corp.
3. Barrier Height – SMART CUSHION® impact attenuators are approximately 33 ⅜ inch (848 mm) high.
4. Barrier Shape – SMART CUSHION® transitions allow for connection to many barrier shapes.

Transition Design

SMART CUSHION® impact attenuators can be attached to many different barrier shapes. The attenuators are designed for direct attachment to 24 in wide barriers and Jersey/F-Shape barriers with base widths up to 27 ½ inch (700 mm). The SMART CUSHION® side panels move rearward beyond the end of the attenuator up to 30 inch (760 mm) upon impact. This area is known as the travel zone. SMART CUSHION® transitions provide this travel zone in front of wider barriers and obstacles.

See appendices for SMART CUSHION® transition drawings. Work Area Protection Corp. can design transitions for other frequently used applications. Contact us for details.

Transitions

Necessary Locations (see Figure 1 – Necessary Locations):

- There is reverse direction traffic within the clear zone .
- The barrier intrudes into the side panels' travel zone.

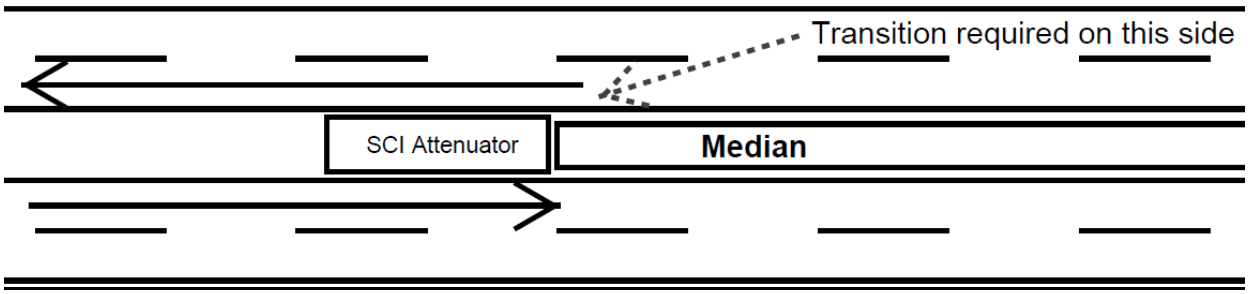

Figure 1 – Necessary Locations

Examples are median applications with bidirectional traffic, two lane roads with crossover potential, etc.

Unnecessary Locations (see Figure 2 – Unnecessary Locations):

- No reverse direction traffic within the clear zone.
- The barrier does not intrude into the side panels' travel zone.

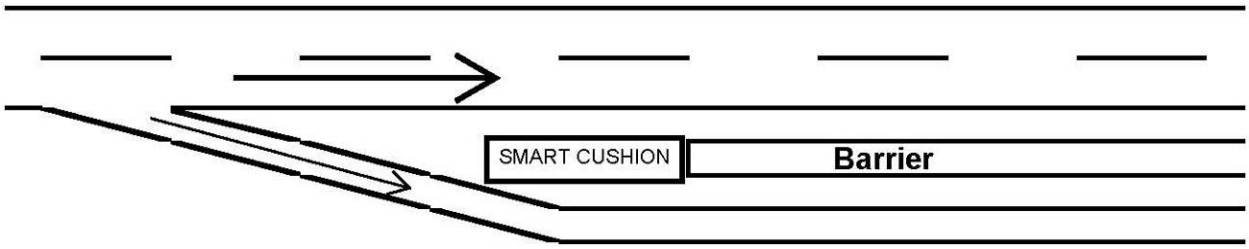

Figure 2 – Unnecessary Locations

Examples are traffic splits, shoulder applications with no crossover potential, one-way roads, etc.

Determining Side of Transition

The transition's side is determined by standing at the front of the attenuator looking rearward toward the barrier to choose between left and right.

Drawings

The following SMART CUSHION® transitions and layouts are available from Work Area Protection Corporation. Diagrams are shown in the Appendices as follows:

- Layout – Gore Assembly, Appendix F & F2 - Rigid design for wide obstacles
- Layout – Gore Assembly Calculations, Appendix F3 - Used to calculate longitudinal distances and parts requirements
- Transition - Jersey/F Shape, Appendix G - Used on standard Jersey/F shaped barriers with a 24 inch Base
- Transition - Concrete Block, 24 Inch, Appendix H - Used on 24 inch Concrete Block that must be 30 inch longitudinal length for our travel zone
- Transition - Concrete Block, 30 Inch, Appendix I - Used on 30 inch Concrete Block and will extend our installation length 38 inches
- Transition - Concrete Block, 36 Inch, Appendix J - Used on 36 inch Concrete Block and will extend our installation length 53 inches
- Transition - Concrete Block, 30 Inch, Flared, Appendix K - Used on 30 inch Concrete Block/Pillars and will extend our installation length 54 inches
- Transition - Concrete Block, 36 Inch, Flared, Appendix L - Used on 36 inch Concrete Block/Pillars and will extend our installation length 71 inches
- Transition – Thrie-Beam Rigid Assembly, Appendix M - Rigid design for possible reverse direction impacts
- Transition – W-Beam Rigid Assembly, Appendix N - Rigid design for possible reverse direction impacts
- Transition – Jersey, Median Barrier Variable Width, Appendix O - Used on Jersey Shape barrier with base widths of 30 - 38 inches wide.
- Transition – Single Slope Barrier, Appendix -P - Used on 42 inch and 48 inch Single Slope barrier up to 26 inches wide at the base
- Transition – W-Beam 28 Inch High, Appendix Q – Connection to 28 inch high W-Beam Guardrail with no reverse direction traffic
- Transition – W-Beam 32 Inch High, Appendix R – Connection to 32 inch high W-Beam Guardrail with no reverse direction traffic
- Transition – Wide Block Spanner, Appendix S – Connection to a wide Concrete Block for one sided protection

Installation

Installation and Performance Statements

Proper performance within these limits depends on correct installation of the system on an approved foundation. Any crash cushion not installed according to the drawings and the requirements of this installation manual may present an unsafe condition and should be reinstalled accordingly.

Impacts with vehicles whose size or mass are outside of those tested according to NCHRP 350 or with vehicles traveling at speeds greater than those tested according to NCHRP 350 will not necessarily produce results within the test criteria. The crash cushion is in conformance with all requirements of NCHRP 350 Levels 2 & 3 but is not guaranteed to safely stop a vehicle in a situation not encompassed by the test conditions.

Safety

All work during installation, repair and inspection of the crash cushion should be performed according to federal, state and local laws.

Equipment List

See Appendix B

Site Preparation

Check to make sure there are no drains, expansion joints, or buried conduit, cables or utility lines in the footprint space where the attenuator will be placed. Remove any curbs >4 inch or obstacles in front of or beside where attenuator will be installed for a minimum distance of 12 feet from any edge of the attenuator. Be sure to set up proper traffic control before beginning any installation or repair work at the site.

Foundations – (reference Appendices E1 and E2)

New foundations should be installed according to Appendix E – Foundation Drawing. Concrete should reach full cure strength before use. The surface of the foundation must be cleaned of all debris, dirt, mud, sand, etc., as the crash cushion must sit on a level plane, although longitudinal and/or cross slope of up to 10:1 (horizontal:vertical) is allowed.

Any of the following foundations will meet the minimum requirements:

- 6 inch reinforced concrete pad
- 8 inch non-reinforced concrete pad
- 3 inch asphalt over 3 inch of concrete
- 6 inch asphalt over 6 inch of compacted sub base
- 8 inch asphalt

Note: Concrete should be 28 MPa or 4000 psi minimum at full cure. The slope should not exceed 10:1.

Installing the crash cushion on an existing foundation may result in anchor bolt locations corresponding to rebar positions in the foundation. It may be necessary to use more elaborate drilling equipment than simply an impact drill with standard concrete bits.

Prior to installing the crash cushion on an existing foundation, the concrete must be thoroughly inspected for slope, signs of cracking, surface wear, shifting from original position, undercut of earth below or to the sides supporting the foundation, settling, and any other signs of age or deterioration which may make the foundation unusable. If any of these signs are evident, the foundation must be removed and a new one must be installed according to requirements stated. If prior bolt patterns are present, use proper engineering calculations to assure adequate strength in the new holes.

Placement of the Crash Cushion

Measure the correct distance and offset of the crash cushion according to the type of object being shielded and the type of transition being used. The dimensions shown on the transition drawings may be used as a guide for this. System drawings are also available.

The crash cushion is shipped in one piece, fully assembled. Use a choked four-point attachment on panel support frames 3 & 4 behind the sled for the Test Level 3 unit. The lift points on the Test Level 2 unit are the 1st and 2nd frames behind the sled. Lift the crash cushion off the transporting vehicle with a boom or forklift of sufficient capacity and place it in the position marked on the foundation.

Once in place, double-check the measurements to be sure of the proper location of the crash cushion.

Warning: On a full collapse, the last set of side panels will telescope 30 inches beyond the last terminal brace at the rear of the crash cushion. All objects that may interfere with this motion can affect the performance of and cause undue damage to the crash cushion.

Anchor Installation

Embedment Requirements are as follows:

1. 6 inch reinforced concrete pad – anchor embedment of 5 ½ inch and a torque value of 125 ft-lbs
2. 8 inch non-reinforced concrete pad – anchor embedment of 5 ½ inch and a torque value of 125 ft-lbs
3. 3 inch asphalt over 3 inch of concrete – anchor embedment of 16 ½ inch and a torque value of less than 10 ft-lbs
4. 6 inch asphalt over 6 in of compacted sub base – anchor embedment of 16 ½ inch and a torque value of less than 10 ft-lbs
5. 8 inch asphalt – anchor embedment of 16 ½ inch and a torque value of less than 10 ft-lbs

Using the holes in the base as a template, drill ⅞ inch diameter holes to the proper depth as previously defined. If the crash cushion is being installed on an existing foundation and the drills are hitting rebar, use a core drill or rebar cutter to ensure that straight, vertical holes are made at each location. Take care that the holes do not break out the bottom of the foundation as this may result in loss of epoxy during anchor placement.

Once the holes are drilled, clean the hole of all debris using suitable means. To ensure epoxy adhesion, concrete holes MUST be cleaned with a bottle brush to remove embedded dust, and a final check conducted that all holes are clean of debris and dry. Inject the epoxy into each hole at an angle to avoid air entrapment. Use a sufficient amount of epoxy so that the hole will be filled when the bolt is inserted. Screw the nut on the anchor bolt flush with the end, put the washer on the stud, and immediately insert the anchor stud all the way to the bottom while turning the anchor. This method assures the anchor bolts are vertically plumb and the threads are coated with epoxy. **Stud locations should not project more than ½ inch above the nut after final torque is completed.

There is a quantity of 48 anchors for the SCI 100 GM, TL-3 attenuator.
There is a quantity of 34 anchors for the SCI 70 GM, TL-2 attenuator.

The epoxy will be ready for bolt tightening after 30 minutes at 80 degrees F (27 degrees C). See the container label for other temperatures and bolt up times. Allow the epoxy to cure. Torque the anchor nuts to 170 N-m (125 ft-lbs). Substitute epoxy must match our specifications. Asphalt anchors are longer and should only be torqued to 10 ft-lbs.

Delineator Panel Attachment

Installation of the front delineation plate will be determined by the location of the attenuator and state regulations. A delineation plate is shipped with a yellow powder coat background and no striping. It is attached with four bolts. Applying the striping to the plate is easier while it is removed from the attenuator. Examples of the delineation plate are as follows:

Right Shoulder

Chevron (Gores)

Left Shoulder

Transition Installation

Transitions may be required. Any use of a crash cushion with a possible reverse direction impact will require a transition. In all applications, be sure to install the transition anchors that are exposed to traffic, so that there is no extension of the studs beyond the outside face of the nut. Refer to the transition drawings for details of the required anchor locations. For horizontal stud installation in concrete use mechanical anchors, or if using studs repeat the same epoxy installation process as the anchor bolts using plugs to retain the epoxy to secure the transition to the barrier. Transition drawings and parts explosions are in the appendices.

Final Inspection

After the anchor bolts have been tightened to the proper torque value, check that the crash cushion is not distorted in any way as might happen if the unit is secured to a foundation which is not a flat plane. Check that the front section is pulled out to within 1 inch of the front stop bolts and that no part of the unit has been damaged by shipping and handling. Verify that all assembly bolts are tight and have not come loose during shipping or installation. Finally, check that no tools or other equipment have been left within the crash cushion structure.

Resetting Crash Cushion after Impact

In the event of any impact, the crash cushion will require a full evaluation to determine the necessary repairs to return it to service. To do this, proceed as follows:

Site Preparation

Do not begin work until the area is declared safe and accessible.

Re-Extension and Inspection after Frontal Impact

1. Remove the front delineator panel and attach pulling means to the bottom brace of the front sled.
2. Use wire or strap on the bottom brace at the front of the sled to hold the spelter socket up in the air while pulling out or it will catch on the base frame cross braces.

3. Remove the front cable bracket that is located on the front sheave at the front of the attenuator.

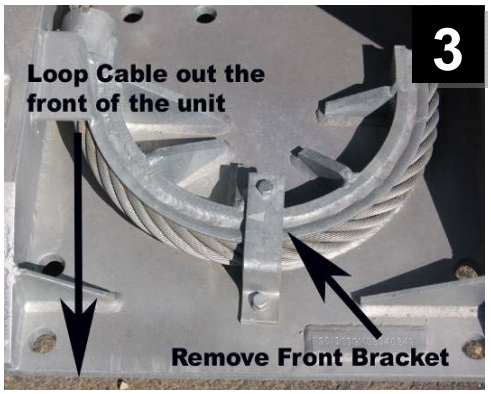

4. Pull the sled forward one to two feet to give you slack on the cable.

5. If necessary, use two long-handled flat screwdrivers or Work Area Protection Corp's cable release tool to break cable loose from the sheave at the front of the attenuator if the zinc coating has attached the cable to the sheave. Start feeding the cable out of the front of the unit.

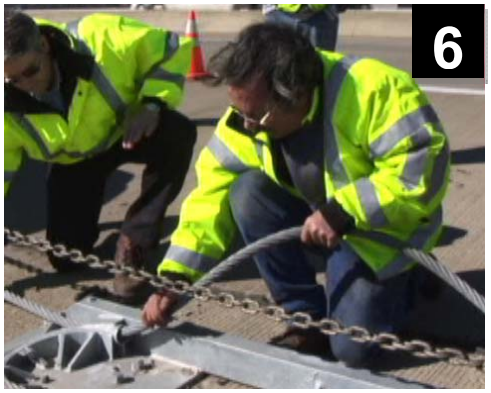

6. Pull the sled out the rest of the way in short smooth increments so you can help feed the cable out the front of the attenuator. This will give you a cable loop in front of the attenuator. When you are past the last cross brace, you will need to remove the

strap or wire to allow the cable to follow the path into the front sheave. The sled must be fully extended to replace the shear bolts. The sled should be approximately 1 inch from the stop bolts in the front.

7. During frame pullout, inspect front part of the cable from the spelter socket, as it will be partially obscured after extension of the mobile frames and sheaves. See the cable inspection procedure.
8. Remove the front and rear sheave cover plates at each end of the cylinder by removing the two hex bolts that hold them down.

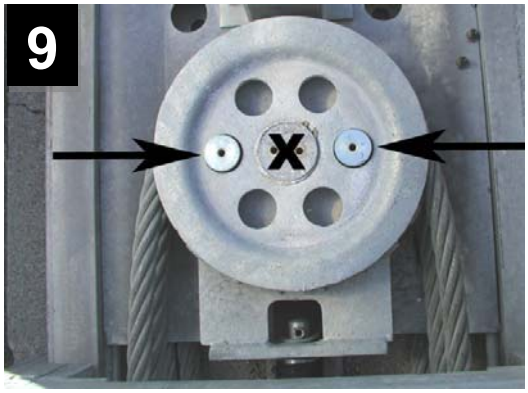

9. Remove the anti-rotation pins, which are the two outer pins, inserted through the holes in the sheaves from both the front and back sheaves. This will be easily done with Work Area Protection Corp's anti-rotation pin removal tool. Caution: Do not remove the center pin. The rear pins are longer than the front sheave pins and cannot be intermixed so leave them by their locations.
10. Remove shear bolt remnants in the holes on both sides of the mobile sheaves. These are grade 8 bolts so they can be difficult to remove without a 90 degree pry bar with a claw to pry out.

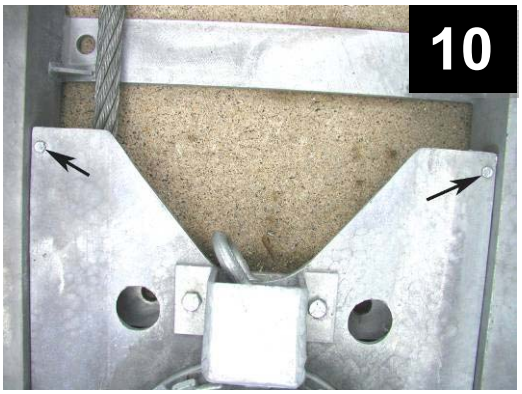

11. Attach a pulling means to the shackle on the mobile sheave assembly. (See #10)
12. Slowly pull out the mobile sheaves. Do not stand inside the cable loop or be in the pulling strap danger zone.
13. Finish pulling out the mobile sheaves until you can see through the shear bolt holes but do not put in the shear bolts yet.
14. If the cable passes inspection, release any tension on your pulling strap and reinstall the anti-rotation pins in the front and back sheave assemblies and reinstall the cover plates for those sheaves using marine grade anti-seize on the bolt threads. The sheaves may be aligned by inserting a pry bar into the sheave holes. Work your way from the bottom up.
15. Put tension on your chain and replace the two ¼ inch Grade 8 shear bolts in the front corners of the mobile sheaves.
16. Inspect the cylinder, anchor bolts and side panels according to the subsequent procedures listed.

Side Impact Inspection and Repair

17. Inspect and replace any damaged side panels.
18. Inspect and replace any damaged side keeper bolts on all panels. There are three styles of side keeper bolts. The winged style is for the panel connected to the sled and bolts through the first frame behind the sled. The center side keepers have a ½ inch shoulder while the last side keeper, which is bolted to the terminal frame, has a ¼ inch shoulder.
19. Inspect and repair any damaged side guides.

Cable Inspection Procedure

The cable should be visually inspected for damage. The most common sign of rope deterioration is broken wires. The wire must be clean and not under tension to perform a visual inspection. The visual inspection should include looking for broken wire strands, localized wear or crowns. A sharp awl or marlin spike can be used to separate wires to check if internal damage is present, indicated by loose wires or crowns. If internal inspection shows any damage to any core wires, the cable should be replaced. If there are more than six random broken wires in one rope lay or three broken wires in one strand in one rope lay, the wire rope should be replaced. A rope lay is the length along the rope in which one strand makes a complete revolution around the rope.

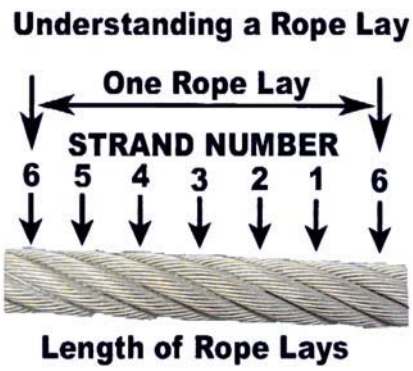

Inspect the spelter socket for broken wires, damaged eyes or other fatigue. Any signs of broken wires at the spelter socket will require a new cable.

Cable damage is the indication of an over-design impact. The unit must be inspected by an authorized manufacturers' representative.

Cylinder Inspection

The cylinder should be inspected for:

- Dented or swollen tube jacket
- Visible cracks in any welds and fluid leakage from the welds
- Piston rod surface damage, bending or fluid leakage in seal area
- If fully collapsed or over design impact speed, disconnect piston rod from the mobile sheave after the unit is pulled out and push the piston rod in checking for free movement.

If any of these inspections are suspect, replace cylinder and have it examined by the manufacturer. Current models have PTFE seals with an unlimited static life.

Anchor Bolt Inspection

Anchor bolts may come loose or be damaged upon impact. These bolts may be replaced by welding a nut or putting a double nut on them and backing them out of the hole. Drill out the old epoxy and reinstall new bolts with new epoxy following previous instructions on page 9.

Side Panel Inspection

Side Panels are designed to nest and collapse with minimal or no damage upon frontal impact. The side keepers sustain a shock upon impact. These side keepers should be replaced if there are any signs of fatigue, bending or other visible damage. Inspect the side panels for any bending or torn metal. If damage is found, any side panel is removable by removing four bolts. It may be necessary to remove the bolts on the panel upstream to slide out a panel located in the middle of the unit. The side keepers used to hold the large front sled panels are different than the side keepers on the center panels. Also, the side keeper used on the last terminal brace, which is the rearmost support, has a shorter shoulder

(¼ inch vs. ½ inch), as it does not have a panel overlap. These shoulders must seat into the outer overlapping panel and pin the inside panel to the frames using a torque value of 270 N-m (200 ft-lbs). Be careful not to pin the edge of the outside panel as it will restrict free sliding of that panel.

Side Guide Inspection

At the bottom of each support frame, there are two guides to stabilize and guide collapse of the attenuator. Inspect each side guide for damage. These guide assemblies are very rugged. If the side guides are not damaged they can be reused. The torque value for the side guides is 920 N-m (680 ft-lb). These side guides are stronger than the rail, so visually inspect the rail for crowns. Any crowning of the rail can be straightened.

Final Inspection

After the resetting of the crash cushion is complete, verify by visual inspection that all assembly bolts are tight and show no sign of damage. Finally, check that no tools and other equipment or debris have been left within the crash cushion structure. Verify that no other damage unrelated to the most recent impact has occurred and that no significant corrosion or other deterioration has taken place.

Non-Repairable Impacts

There can be instances where the impact is outside the scope of the crash cushion's design. This may render the crash cushion unsafe to reuse and it should be replaced.

APPENDIX A - SCI SMART CUSHION® ATTENUATOR PARTS LIST

Prod No.	Part No.	Description	Qty Per Unit TL2/TL3	Unit of Measure
270128	9400	Attenuator 24" wide w/Concrete Anchors TL3		
270127	9450	Attenuator 24" wide w/Asphalt Anchors TL3		
270126	9451	Attenuator 24" wide w/Concrete Anchors TL2		
270125	9452	Attenuator 24" wide w/Asphalt Anchors TL2		
270667	9401	Bolt Concrete Anchor 3/4" X 7" TL3 *(Included in P/N 9400)	*	KIT/48 pcs.
270663	9402	Bolt Asphalt Anchor 3/4" x 18" TL3 *(Included in P/N 9450)	*	KIT/48 pcs.
270666	9453	Bolt Concrete Anchor 3/4" X 7" TL2 **(Included in P/N 9451)	**	KIT/34 pcs.
270664	9454	Bolt Asphalt Anchor 3/4" x 18" TL2 **(Included in P/N 9452)	**	KIT/34 pcs.
270685	9404	Bolt Sled Side Panel	8	EACH
270677	9405	Bolt Front Stop	2	EACH
270683	9406	Bolt Shear	2	EACH
270687	9408	Bolt Terminal Brace	4	EACH
270770	9409	Brace Terminal	1	EACH
274915	9413	Strap Cylinder TL3	1	EACH
233936	9448	Strap Cylinder TL2	1	EACH
272214	9414	Frame Mobile #1 TL3	0/1	EACH
272215	9415	Frame Mobile #2 TL3	0/1	EACH
272216	9416	Frame Mobile #3 TL3	0/1	EACH
272217	9417	Frame Mobile #4 TL2 & TL3	1	EACH
272218	9418	Frame Mobile #5 TL2 & TL3	1	EACH
272219	9419	Frame Mobile #6 TL2 & TL3	1	EACH
272527	9421	Keeper Side #3 (Sled Panels) TL2 & TL3	4	EACH
272593	9422	Keeper Side #1 (Side Panels) TL2 & TL3	8/20	EACH
272595	9423	Keeper Side #2 (Rear Panels) TL2 & TL3	4	EACH
273378	9424	Panel Delineator (Painted Yellow) TL3	0/1	EACH
273386	9496	Panel Delineator (Painted Black) TL3		EACH
273381	9497	Panel Delineator Diamond Grade Chevron 6 inch stripes TL3		EACH
273383	9498	Panel Delineator Diamond Grade Left 6 inch stripes TL3		EACH
273389	9499	Panel Delineator Diamond Grade Right 6 inch stripes TL3		EACH
273380	9456	Panel Delineator (Painted Yellow) TL2	1/0	EACH
273385	9506	Panel Delineator (Painted Black) TL2		EACH
273382	9501	Panel Delineator Diamond Grade Chevron 6 inch stripes TL2		EACH
233928	9502	Panel Delineator Diamond Grade Left 6 inch stripes TL2		EACH
273388	9503	Panel Delineator Diamond Grade Right 6 inch stripes TL2		EACH
273401	9425	Panel Side TL2 & TL3	4/10	EACH
273402	9426	Panel Sled	2	EACH
273399	9427	Panel Rear	2	EACH
274649	9429	Sled (with guide rollers) 24" TL3	0/1	EACH
274648	9457	Sled (with guide rollers) 24" TL2	1/0	EACH
271242	9439	Epoxy 28 oz. Cartridge and Nozzle ***	***	EACH
272612	9515	Epoxy Kit for TL3 Concrete Attenuator		EACH
272610	9516	Epoxy Kit for TL3 Asphalt Attenuator		EACH
272611	9517	Epoxy Kit for TL2 Concrete Attenuator		EACH
272609	9518	Epoxy Kit for TL2 Asphalt Attenuator		EACH
273113	9440	Nozzle Epoxy Mixing ***	***	EACH
271946	9441	Dispenser Epoxy	0	EACH
270707	9443	Boot Cylinder TL3	1	EACH
233937	9449	Boot Cylinder TL2	0	EACH
272626	9444	Spare Parts Kit TL3	0	EACH

APPENDIX A - SCI SMART CUSHION® ATTENUATOR PARTS LIST (continued

274747	9458	Spare Parts Kit TL2	0	EACH
272621	9488	Reset Parts Kit TL3	0	EACH
272620	9489	Reset Parts Kit TL2	0	EACH
273994	9495	Tool Anti Rotation Pin Removal	0	EACH
270069	9507	Anchor Drop In	0	EACH
273590	9508	Pin Anti-Rotation Front	0	EACH
273608	9509	Pin Anti-Rotation Rear	0	EACH
273667	9510	Plate Sheave Cover	0	EACH
233449	9524	PWB02 Block Out	0	EACH
275224	9525	Cable Release Tool	0	EACH
238247	9536	Shear Bolt Removal Tool	0	EACH
270952	9519	Hole Brush-Nylon	0	EACH
		Transitions and Transition Parts		
275297	9431	Transition Jersey Barrier - Right	O	EACH
275294	9432	Transition Jersey Barrier - Left	O	EACH
275263	9433	Transition 24" Concrete - Left & Right	O	EACH
275298	9437	Transition Thrie & W Beam - Right	O	EACH
232971	9438	Transition Thrie & W Beam - Left	O	EACH
275309	9511	Transition W Beam 28" High Right	O	EACH
275307	9512	Transition W Beam 28" High Left	O	EACH
275311	9513	Transition W Beam 32" High Right	O	EACH
275310	9514	Transition W Beam 32" High Left	O	EACH
275279	9459	Transition Assembly 30" Concrete Straight Connection	O	EACH
275283	9460	Transition Assembly 36" Concrete Straight Connection	O	EACH
275278	9461	Transition Assembly 30" Concrete Outside Connection	O	EACH
275282	9462	Transition Assembly 36" Concrete Outside Connection	O	EACH
275288	9475	Transition Assembly Gore to End of Flared Transition	O	EACH
239542	9528	Transition Assembly Median Barrier Variable Width with Rub Rail	O	EACH
239545	9535	Transition Assembly Median Barrier Variable Width w/o Rub Rail	O	EACH
275265	9463	Transition 30" Concrete Straight Connection	O	EACH
275267	9464	Transition 36" Concrete Straight Connection	O	EACH
275266	9465	Transition 30" Concrete Outside Connection	O	EACH
275268	9466	Transition 36" Concrete Outside Connection	O	EACH
275304	9467	Transition Thrie & W Beam 10 Degree Flare - Right	O	EACH
275306	9468	Transition Thrie & W Beam 10 Degree Flare - Left	O	EACH
275291	9469	Transition Concrete Spanner Brace	O	EACH
275290	9470	Transition Concrete #1 Tapered Spanner Brace	O	EACH
233450	9471	Transition Concrete #2 Tapered Spanner Brace	O	EACH
275292	9472	Transition Gore Tapered #1 Spanner Brace	O	EACH
275293	9473	Transition Gore Tapered #2 Spanner Brace	O	EACH
270765	9474	Thrie Beam Concrete Leg Brace	O	EACH
275273	9493	Transition Median Barrier Variable Width - Right	O	EACH
275272	9494	Transition Median Barrier Variable Width - Left	O	EACH
239471	9526	Transition Support Bracket - Right	O	EACH
239472	9527	Transition Support Bracket - Left	O	EACH
275271	9480	Transition Rub Rail Median Barrier-Right	O	EACH
275270	9481	Transition Rub Rail Median Barrier-Left	O	EACH
275299	9490	Transition Single Slope 24-26 9/32" Wide Median Barrier - Right	O	EACH
275302	9491	Transition Single Slope 24-26 9/32" Wide Median Barrier - Left	O	EACH
251641	9537	Transition Spanner – Left & Right	O	EACH
		O = Optional Revised 4-2013		

APPENDIX B - EQUIPMENT LIST

The following tools and equipment will be required to install and repair the Crash Cushion:

- Standard roadside work area safety equipment
- Personal safety equipment (gloves, latex gloves for epoxy, eye/face protection, etc.)
- Means of safely unloading 3500 lbs.
- Compressed air source/vacuum
- 1 inch bottle brush
- Safety goggles
- Four lifting slings or four-point sling
- Bosch rotary hammer drill 13 ½ amp #11263EVS Model 0 611 263 739 or equal
- ⅞ inch X 22 inch concrete drill bit for concrete installations or ⅞ inch X 28 inch drill bit for asphalt installations
- Renton rebar eater bit #RB-14 - ⅞ inch rebar cutter bit or equal
- 1 inch X 12 inch concrete drill bit for drop-in anchors on transitions
- Punch or setting tool for drop in anchors.
- ½ inch electric drill for rebar bit and bottle brush (cordless will work for bottle brush)
- Epoxy dispenser for 28 oz. dual cartridge system (have spare in case of malfunction)
- Socket wrench and breaker bar
- Torque wrench (225 ft-lb capacity) with 3 ft extension
- Measuring and layout equipment (tape measure, chalk line, markers, etc.)
- Combination wrenches, deep sockets (Including 7/16 inch - ⅝ inch, 1 ¼ inch, 1 ½ inch, 1 ⅝ inch) and 3+ inch extension
- 5 foot wedge and round-ended pry bar
- Loctite #34395 marine grade anti-seize
- Suitable pulling means (strap or chain)
- 2 long-handled flat screwdrivers
- Misc. small tools (hammers, pliers, screwdrivers, vise grips, etc.)
- Bear claw pry bar to remove ¼ inch shear bolt remnants
- Anti-rotation pin removal tool
- Cable release tool
- Piece of wire to hold up spelter socket during pullout

This list is adequate for general installation and repair.
Depending on site conditions, additional tools and equipment may be required.

APPENDIX C - SMART CUSHION®, TEST LEVEL 2

PARTS LIST

01 - Front Sled
02 - Cable Assembly
05 - Sled Panel
07 - Terminal Brace
09 - Anchor Bolts
12 - Side Panels
14 - Mobile Sheave Assembly
17 - Cable Adjuster Bolt
18-20 - Mobile Frames 4-6
26 - Cylinder
27 - Rear Panel
06, 08, 29 - Side Keepers

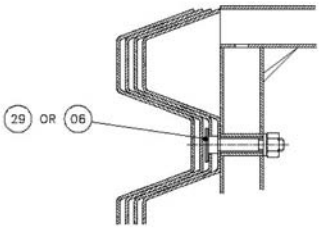

DETAIL A

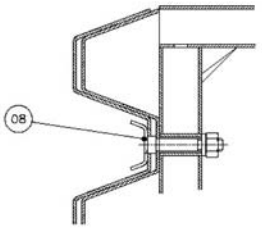

DETAIL B

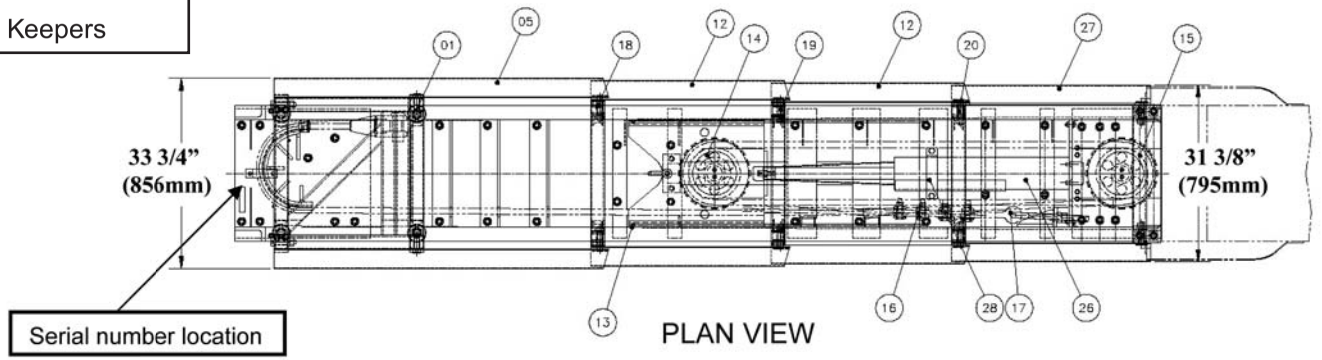

PLAN VIEW

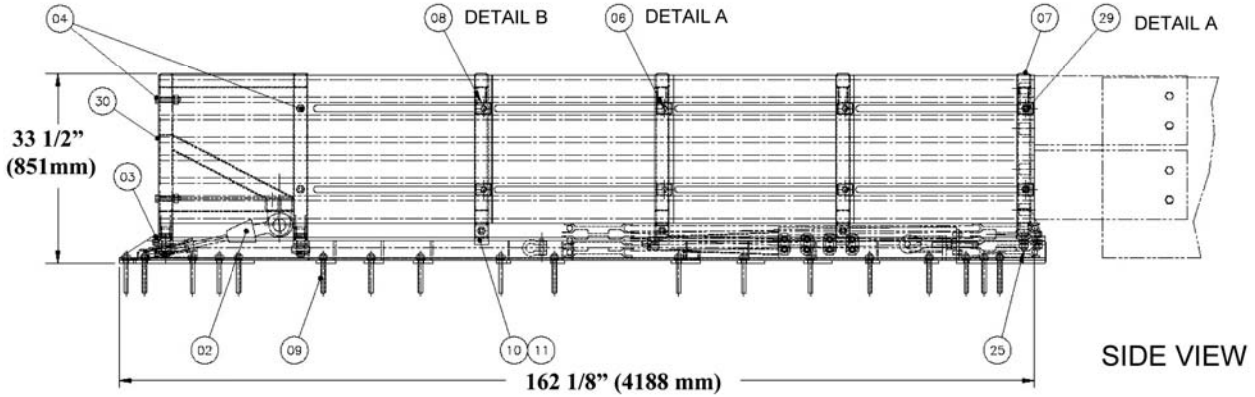

SIDE VIEW

APPENDIX D - SMART CUSHION®, TEST LEVEL 3

PARTS LIST

01 - Front Sled
02 - Cable Assembly
05 - Sled Panel
07 - Terminal Brace
09 - Anchor Bolts
12 - Side Panels
14 - Mobile Sheave Assembly
17 - Cable Adjuster Bolt
18-23 - Mobile Frames 1-6
26 - Cylinder
27 - Rear Panel
06, 08, 29 - Side Keepers

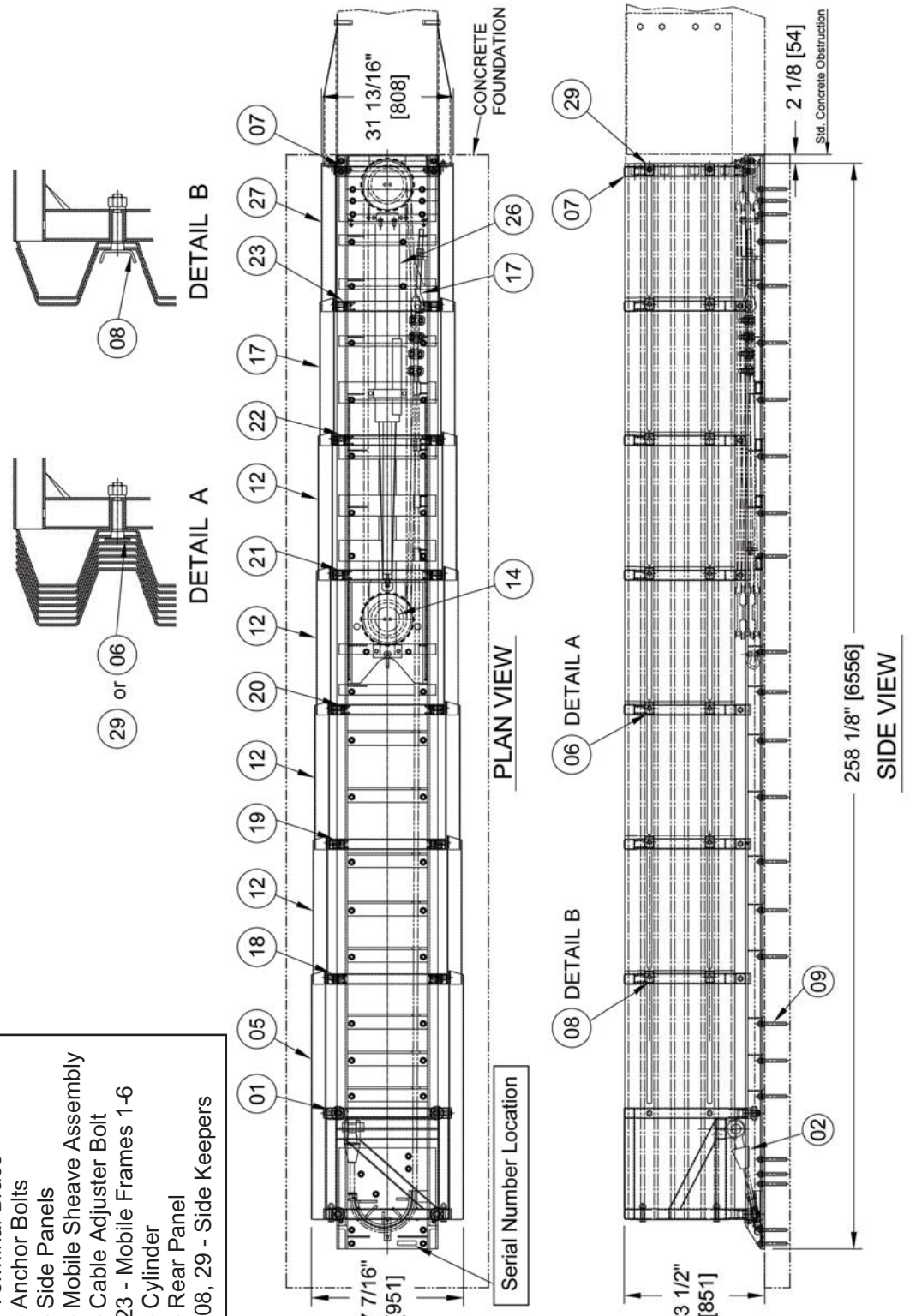

APPENDIX E1 - TEST LEVEL 2 FOUNDATION

Cross Slope at Top Surface not to Exceed 1 in 10
Foundation must be a Level Plane

* * * * * Wide Hazards and Transitions may require the foundation to be longer. See Transition Drawings.

SPECIFICATIONS

All reinforcing steel - straight #4 ASTM-A36

Embedment requirements:

- 6" reinforced concrete pad with anchor embedment of 5 1/2"
- 8" non-reinforced concrete pad with anchor embedment of 5 1/2"
- 3" asphalt over 3" concrete with anchor embedment of 16 1/2"
- 6" asphalt over 6" of compacted subbase with anchor embedment of 16 1/2"
- 8" asphalt with anchor embedment of 16 1/2"

The contractor shall furnish a certification for material installed to the following requirements:

- 6" reinforced concrete (PCC) sampling per ASTM C31-84, testing per ASTM C39-84
- 8" non-reinforced concrete (PCC) sampling per ASTM C31-84, testing per ASTM 39-84
- 3" asphalt over 3" concrete - Type SP 12.5 Level C or higher
- 6" asphalt over 6" of compacted subbase - same as above
- 8" asphalt (AC) - Type SP 12.5 Traffic Level C or higher

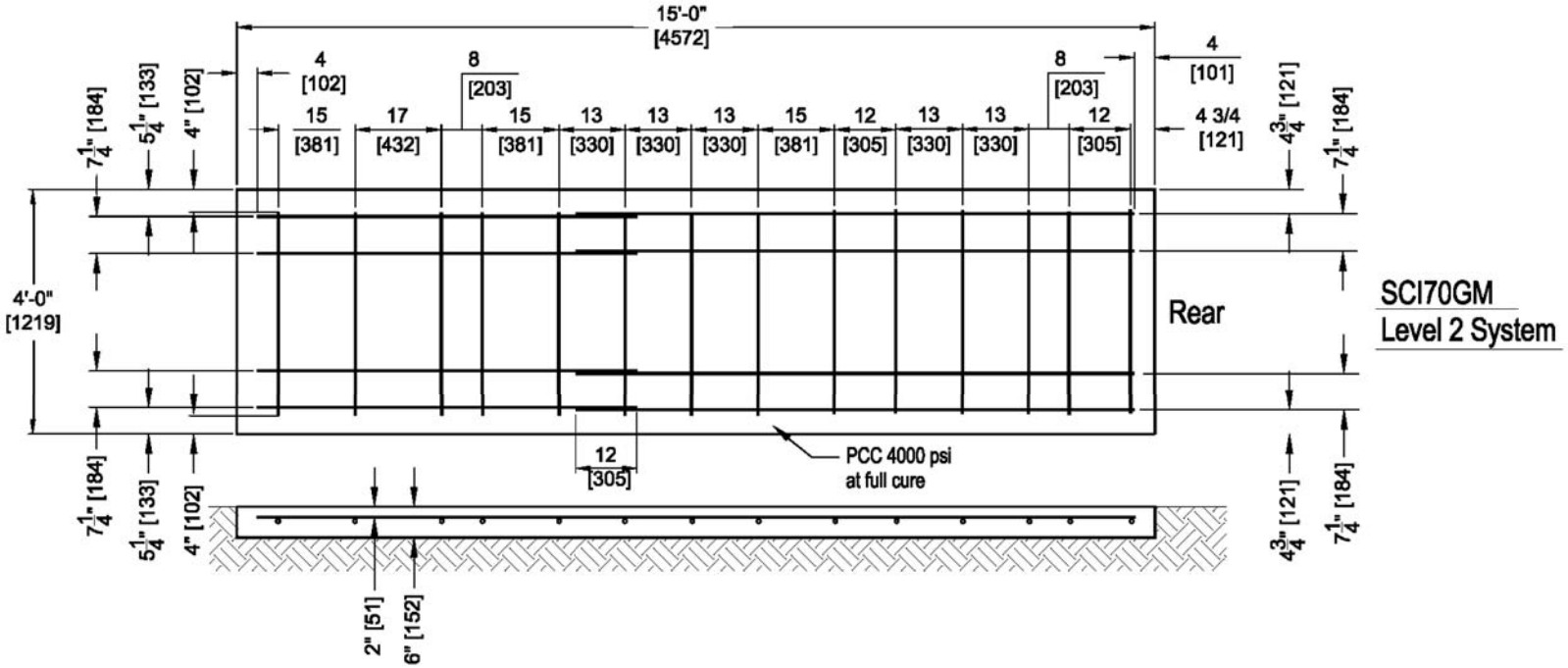

SMART CUSHION® by SCI Products, Inc.

APPENDIX E2 - TEST LEVEL 3 FOUNDATION

Cross Slope at Top Surface not to Exceed 1 in 10
Foundation must be a Level Plane

* * * * * Wide Hazards and Transitions may require the foundation to be longer. See Transition Drawings.

SPECIFICATIONS

All reinforcing steel - straight #4 ASTM-A36

Embedment requirements:

- 6" reinforced concrete pad with anchor embedment of 5 1/2"
- 8" non-reinforced concrete pad with anchor embedment of 5 1/2"
- 3" asphalt over 3" concrete with anchor embedment of 16 1/2"
- 6" asphalt over 6" of compacted subbase with anchor embedment of 16 1/2"
- 8" asphalt with anchor embedment of 16 1/2"

The contractor shall furnish a certification for material installed to the following requirements:

- 6" reinforced concrete (PCC) sampling per ASTM C31-84, testing per ASTM C39-84
- 8" non-reinforced concrete (PCC) sampling per ASTM C31-84, testing per ASTM 39-84
- 3" asphalt over 3" concrete - Type SP 12.5 Level C or higher
- 6" asphalt over 6" of compacted subbase - same as above
- 8" asphalt (AC) - Type SP 12.5 Traffic Level C or higher

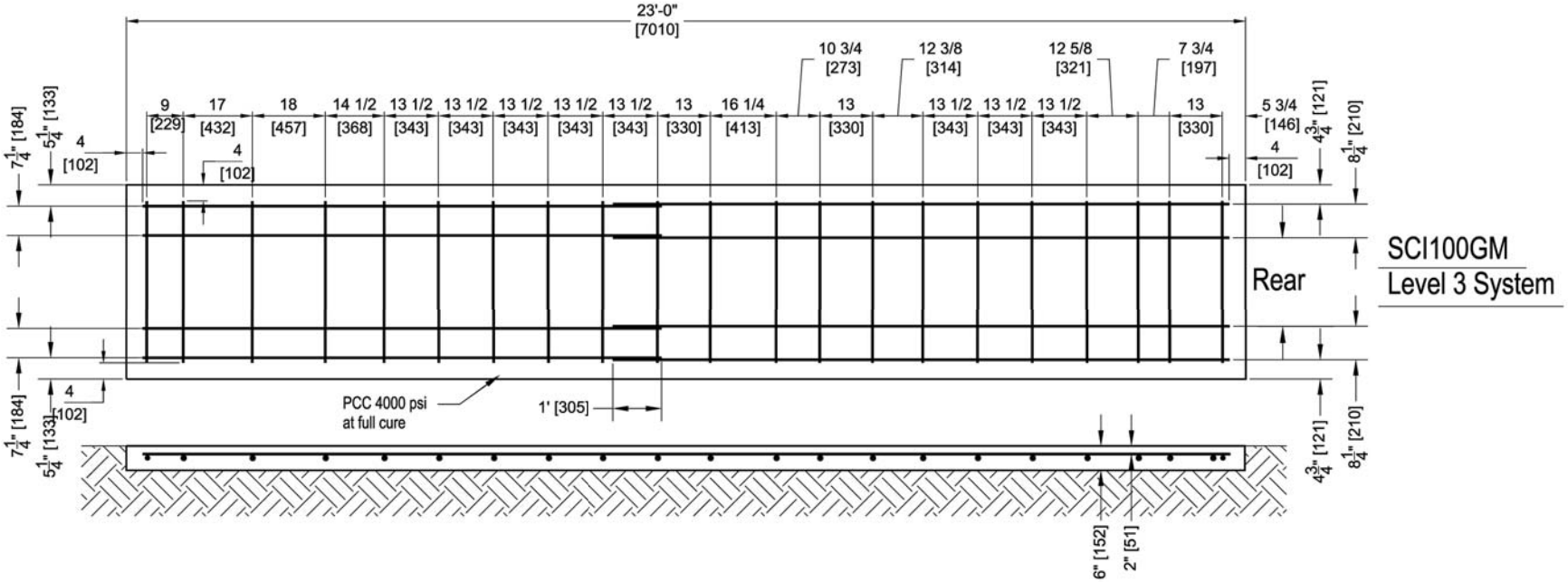

APPENDIX F - TRANSITION, GORE ASSEMBLY

PARTS LIST

Gore Assembly #9475
01 - Transition 10 Degree Flare Right #9467
01 - Transition 10 Degree Flare Left #9468
02 - Transition Concrete Spanner Brace #9469
03 - Transition Concrete #1 Spanner Brace #9470
04 - Transition Gore Tapered #1 Spanner Brace #9472
05 - Transition Gore Tapered #2 Spanner Brace #9473
06 - Thrie Beam Concrete Leg Brace #9474
07 - Thrie Beam Blockout (AASHTO PWB02)

***** SPLICE BOLTS AND GUARDRAIL SUPPLIED BY OTHERS*****

NOTES:
1) DIMENSIONS SHOWN ARE FOR 60" WIDTH
2) FOR EACH 1" OF WIDTH CHANGE, ADD OR SUBTRACT THE FOLLOWIING:
   2.88" [73.15mm] TO LENGTH OF GUARDRAIL
   2.84" [72.13mm] TO OVERAL LENGTH
3) ADD OR SUBTRACT ADDITIONAL POST ON EACH SIDE FOR EACH 13" [330mm] CHANGE IN WIDTH.
4) GUARDRAIL TERMINATION - YOU MUST ADD THE GUARDRAIL OVERLAP LENGTH AND TERMINATE PER STATE REGULATIONS.

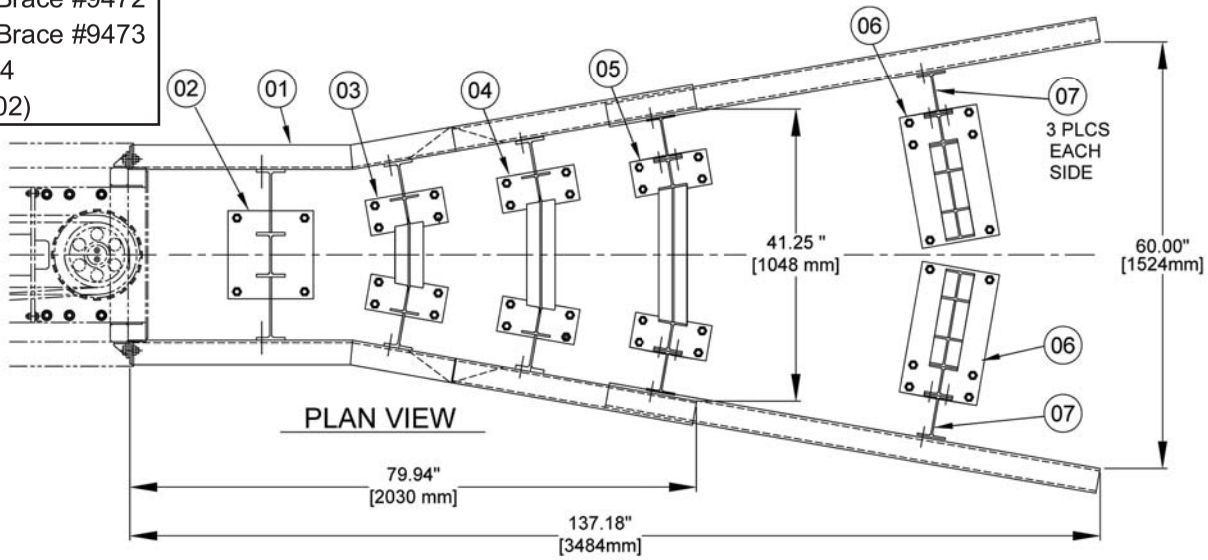

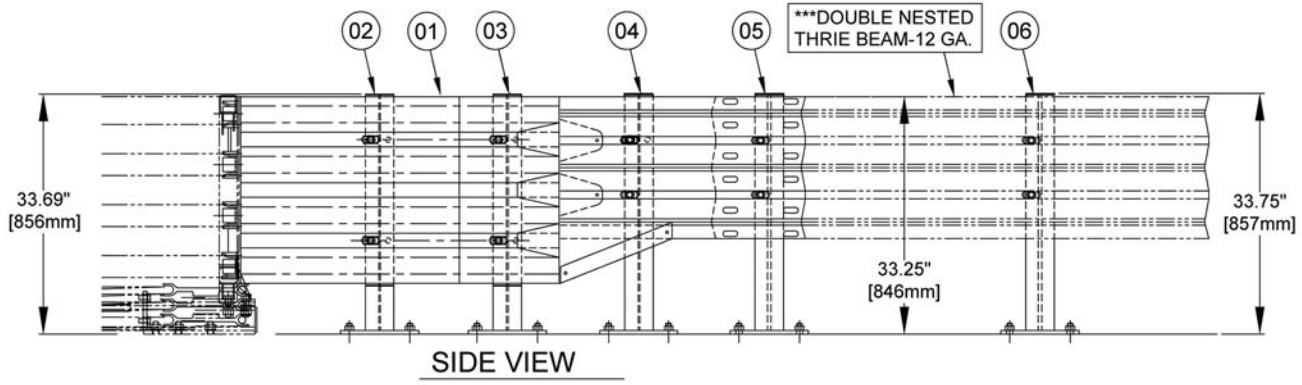

The use of the last brace will be determined by whether the Thrie Beam can be attached to the obstruction or not. If the Thrie Beam distance from the last brace is 40 inches or less and can be attached, you will not need a brace at the obstruction. If you cannot attach to the obstruction, you may need a brace and drill holes in the Thrie Beam at the furthest rearward location.

APPENDIX F(2) - TRANSITION. GORE ASSEMBLY

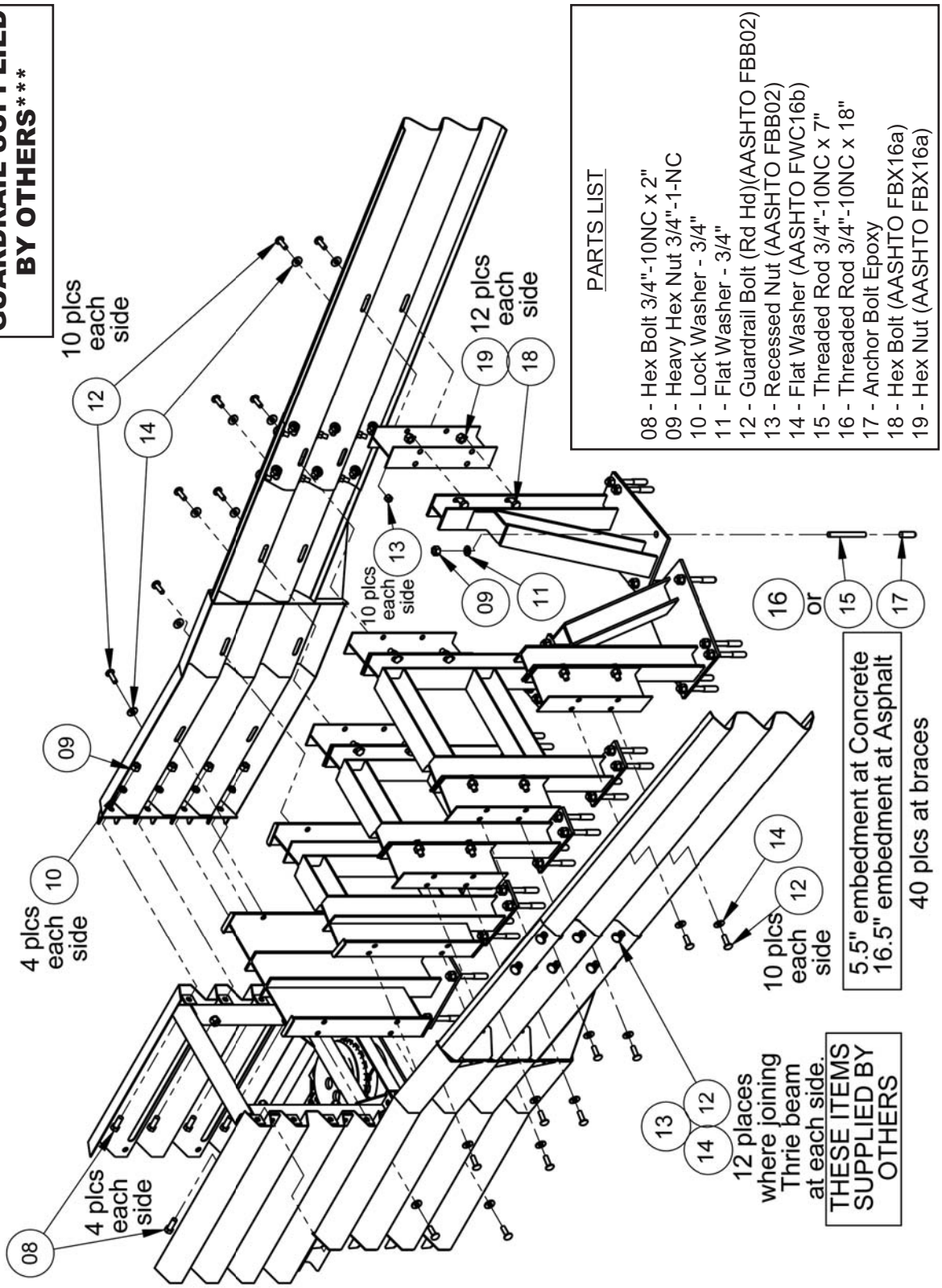

APPENDIX F(3) - TRANSITION. GORE ASSEMBLY CALCULATIONS

SCI GM WIDE TRANSITION CALCULATIONS

Guardrail

12.6" Splice overlap at Transition end

Must add length for barrier overlap and end termination per state specifications

Longitudinal distance increases 2.84" for each 1" increase in width

Thrie Beam Length increases 2.88" for each 1" increase in width

Gore Width Inches	Additional Long. Distance Inches	Additional Long. Distance Feet	Thrie Beam Length Inches	Overall System Length Feet	Additional Brace Count
41	79.2	6.6	12.6	28.1	All 4 Spanner Braces # 9469, 9470, 9472, 9473
48	99.1	8.3	32.8	29.8	All 4 Spanner Braces # 9469, 9470, 9472, 9473
55	118.9	9.9	52.9	31.4	Add 2-Thrie Beam Concrete Leg Brace #9474
60	133.1	11.1	67.3	32.6	Add 2-Thrie Beam Concrete Leg Brace #9474
68	155.8	13.0	90.4	34.5	Add 4-Thrie Beam Concrete Leg Brace #9474
69	158.6	13.2	93.2	34.7	Add 4-Thrie Beam Concrete Leg Brace #9474
81	192.7	16.1	127.8	37.6	Add 6-Thrie Beam Concrete Leg Brace #9474
88	212.5	17.7	148.0	39.2	Add 6-Thrie Beam Concrete Leg Brace #9474
94	229.5	19.1	165.2	40.6	Add 8-Thrie Beam Concrete Leg Brace #9474
100	246.5	20.5	182.5	42.1	Add 8-Thrie Beam Concrete Leg Brace #9474
107	266.4	22.2	202.7	43.7	Add 10-Thrie Beam Concrete Leg Brace #9474
112	280.6	23.4	217.1	44.9	Add 10-Thrie Beam Concrete Leg Brace #9474
120	303.3	25.3	240.1	46.8	Add 12-Thrie Beam Concrete Leg Brace #9474
126	320.3	26.7	257.4	48.2	Add 12-Thrie Beam Concrete Leg Brace #9474
133	340.1	28.3	277.6	49.9	Add 14-Thrie Beam Concrete Leg Brace #9474

APPENDIX G - TRANSITION, JERSEY/F SHAPE BARRIER

PARTS LIST

01 - Transition Jersey Barrier Right #9431
02 - Transition Jersey Barrier Left #9432

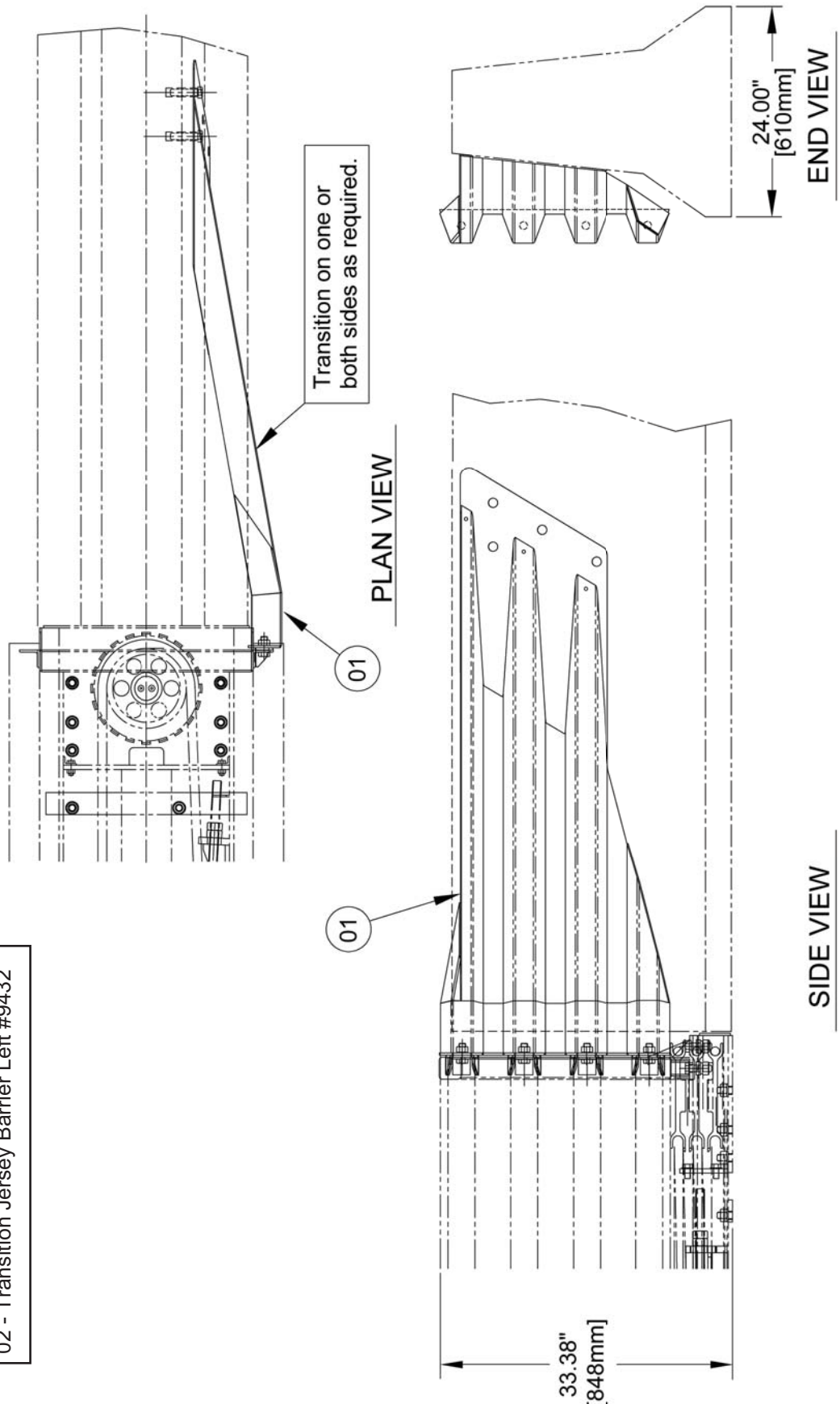

APPENDIX G(2) - TRANSITION, JERSEY/F SHAPE BARRIER

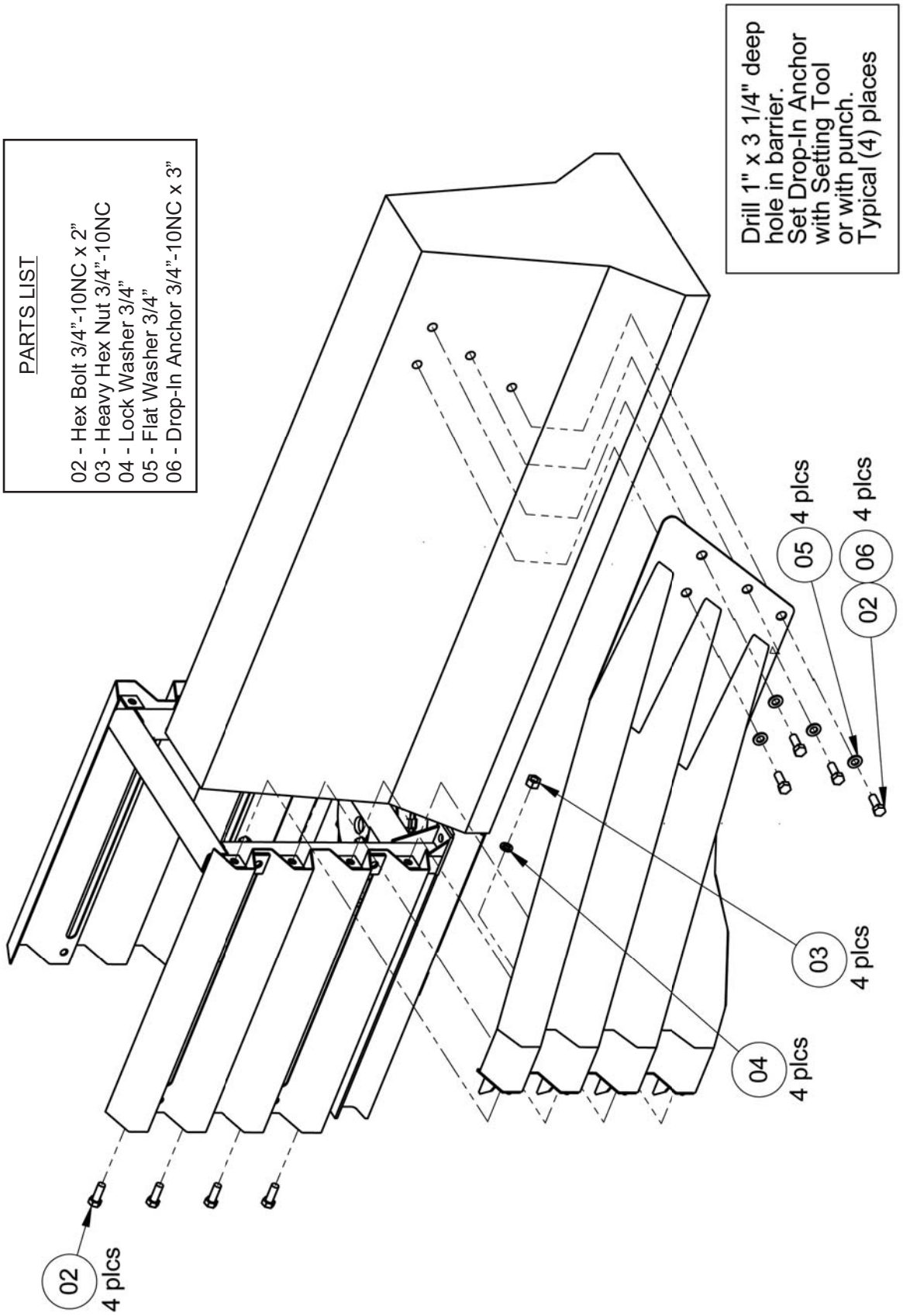

APPENDIX H - TRANSITION, CONCRETE BLOCK, 24 INCH (610mm)

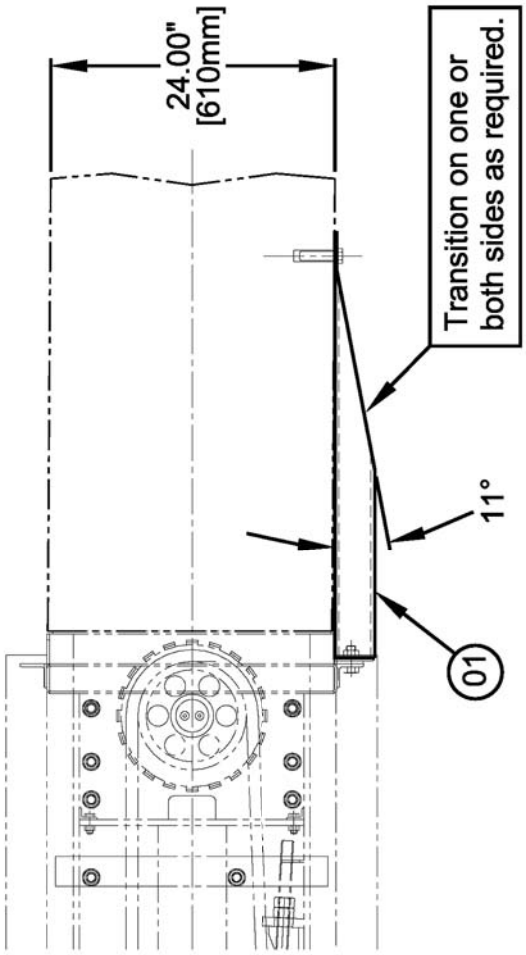

PLAN VIEW

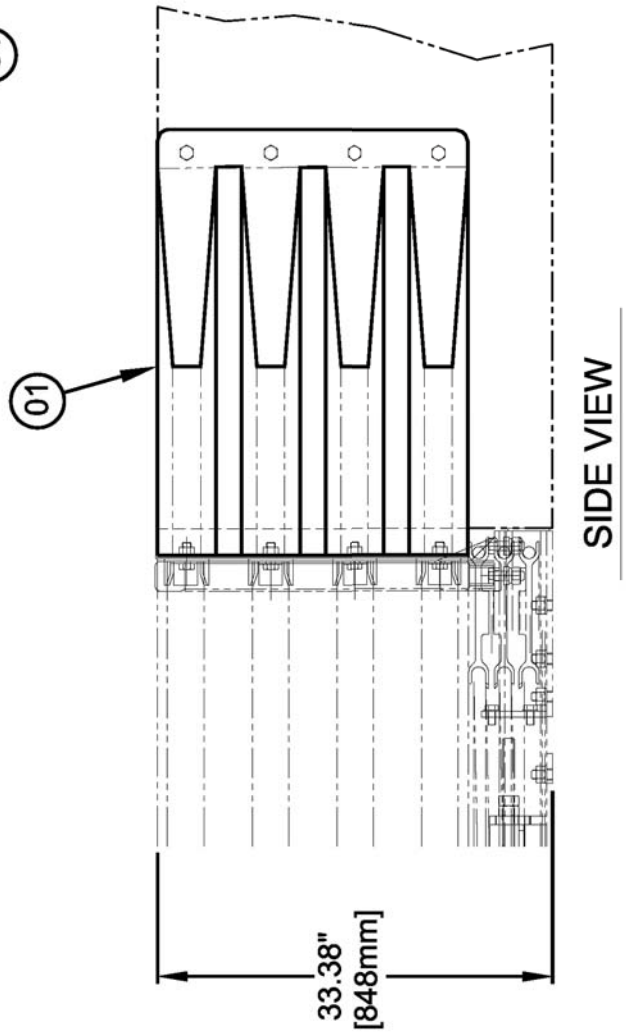

SIDE VIEW

PARTS LIST

01 - Transition Concrete Block Right or Left #9433

APPENDIX H(2) - TRANSITION, CONCRETE BLOCK, 24 INCH (610mm)

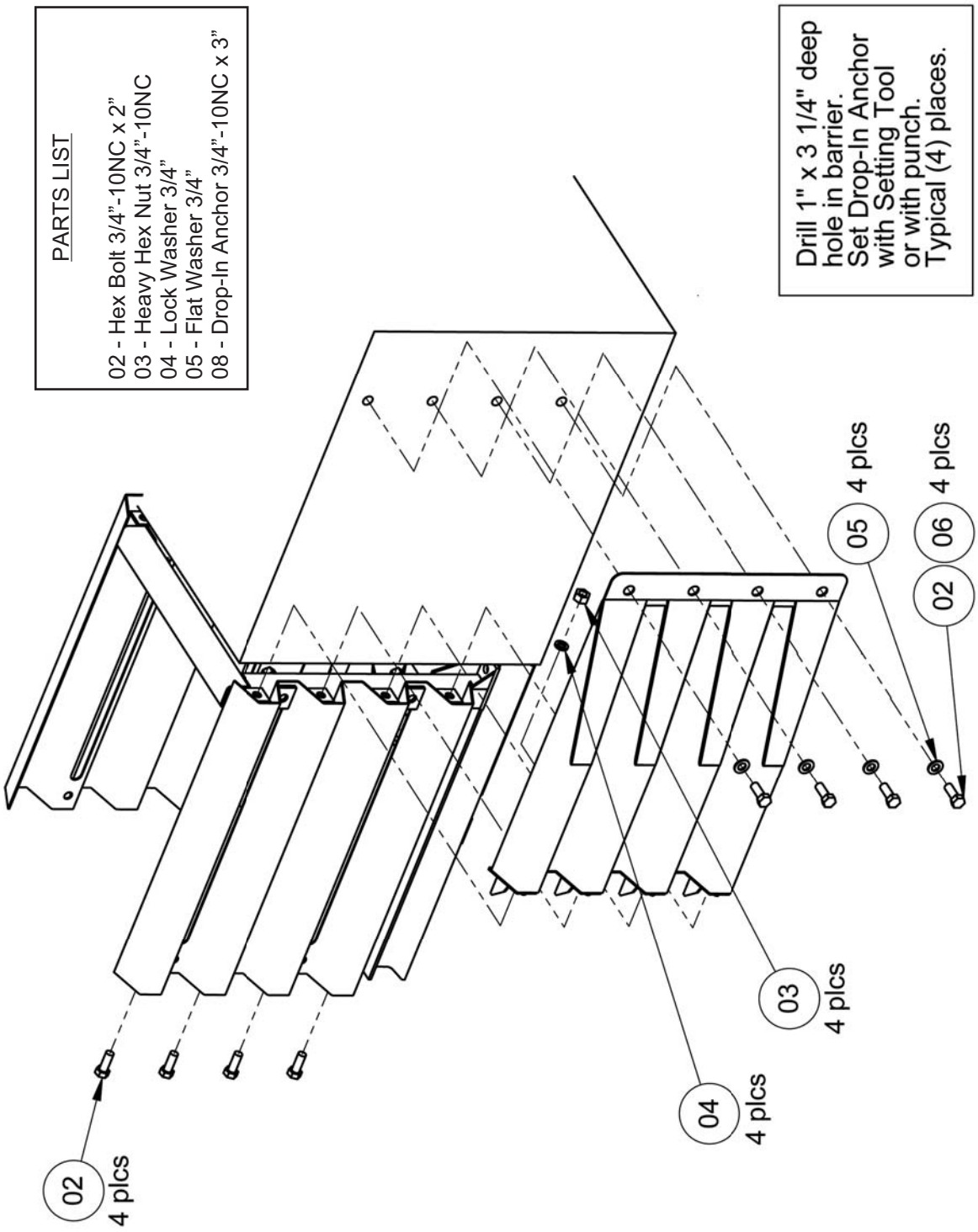

APPENDIX I - TRANSITION, CONCRETE BLOCK, 30 INCH (762mm)

PARTS LIST

Two Sided Full Assembly #9459
01 - Transition 30" Concrete Straight Connection #9463
02 - Transition Concrete Spanner Brace #9469

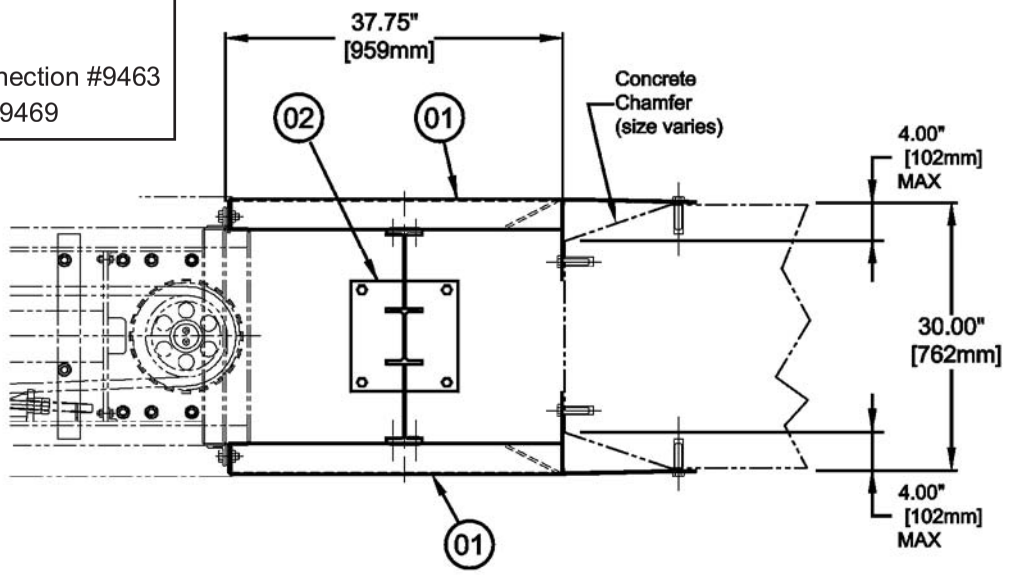

PLAN VIEW

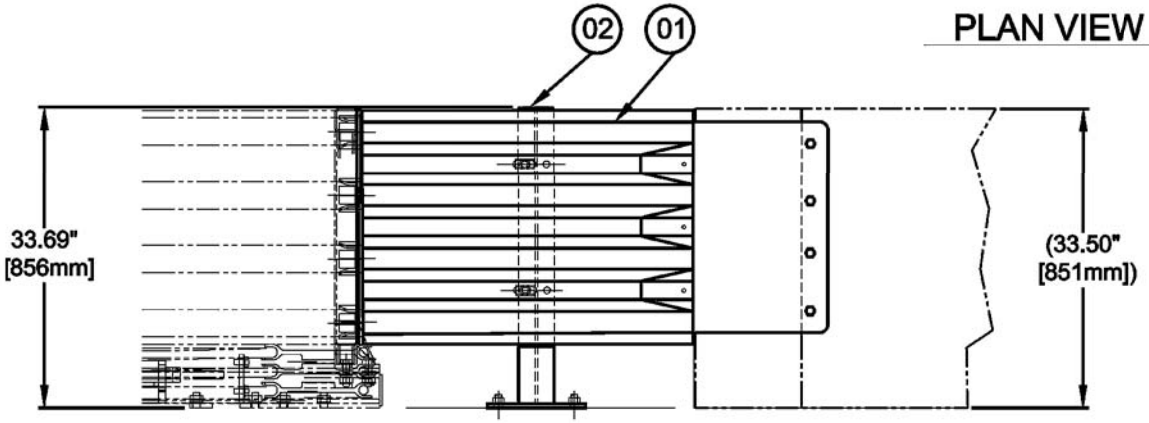

SIDE VIEW

USED FOR:
1. Unchamfered Concrete Block
2. Chamfered Concrete Block ***

***Chamfer limited to <4"

APPENDIX I(2) - TRANSITION, CONCRETE BLOCK, 30 INCH (762mm)

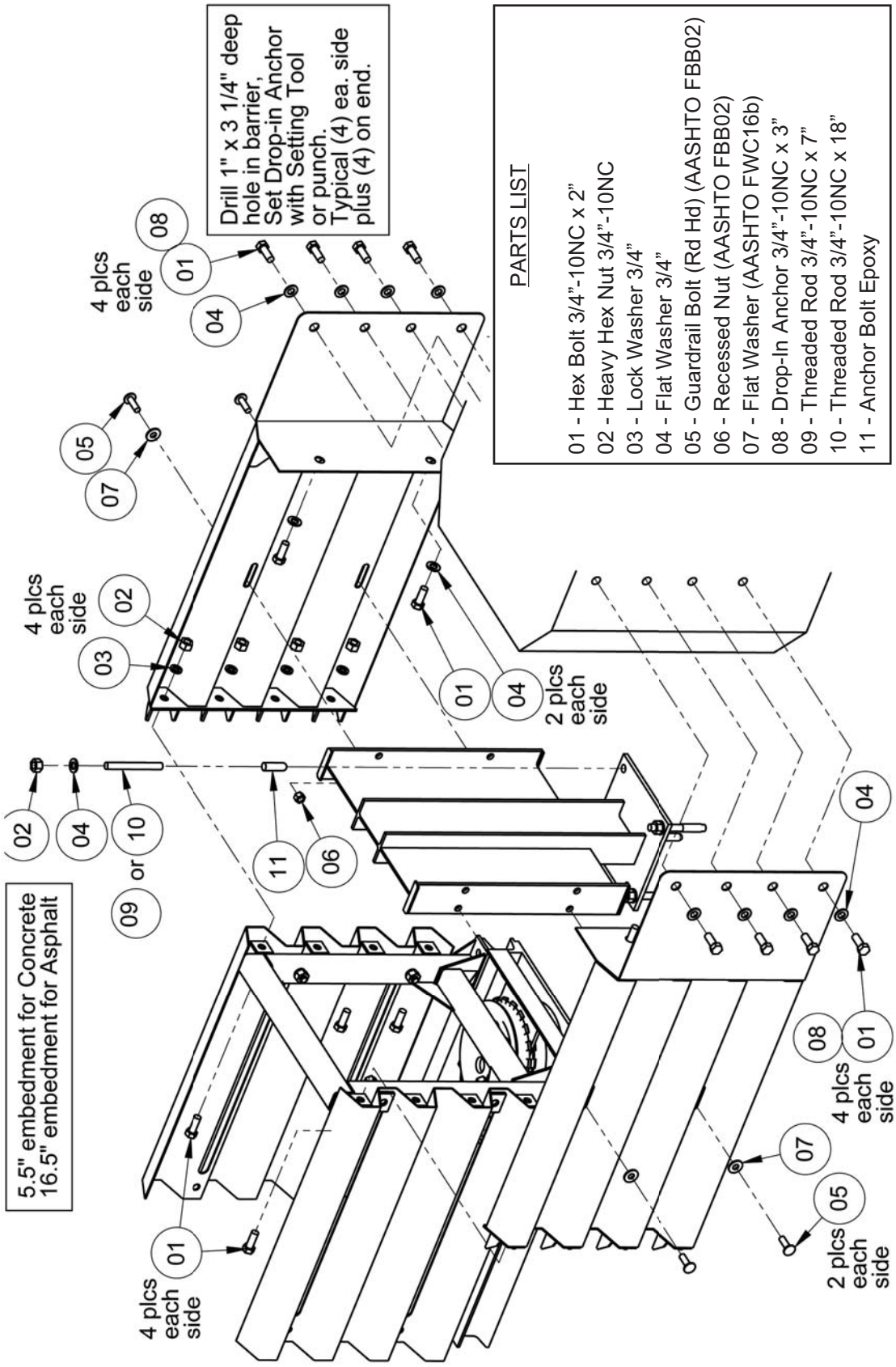

APPENDIX J - TRANSITION, CONCRETE BLOCK, 36 INCH (915mm)

PARTS LIST

Two Sided Full Assembly #9460
01 - Transition 36" Concrete Straight Connection #9464
02 - Transition Concrete Spanner Brace #9469
03 - Transition Concrete #1 Spanner Brace #9470

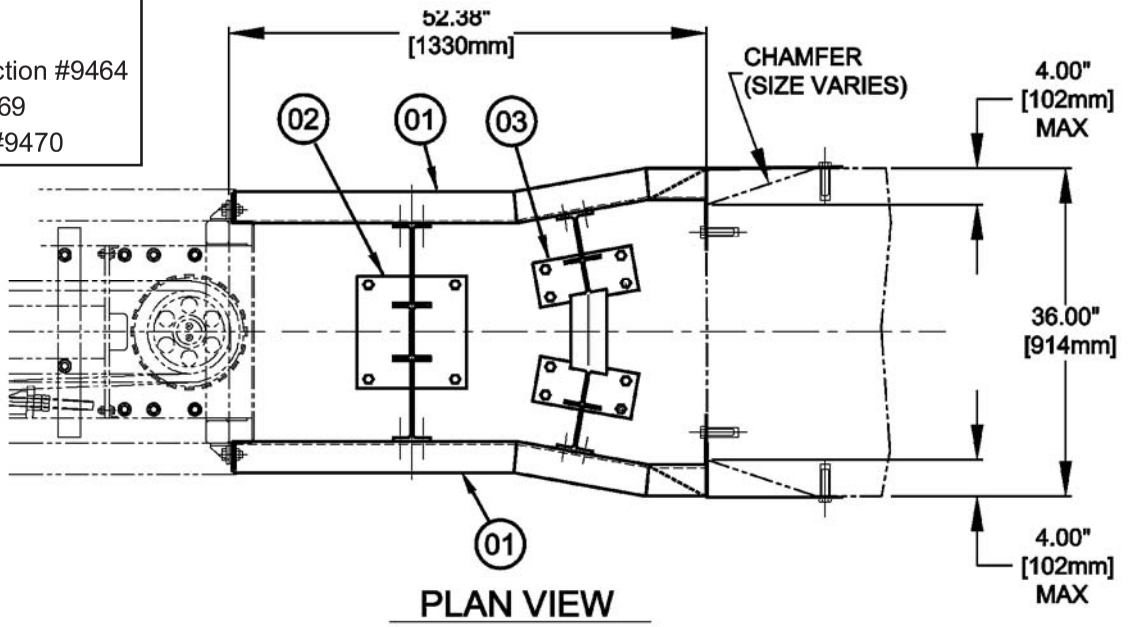

PLAN VIEW

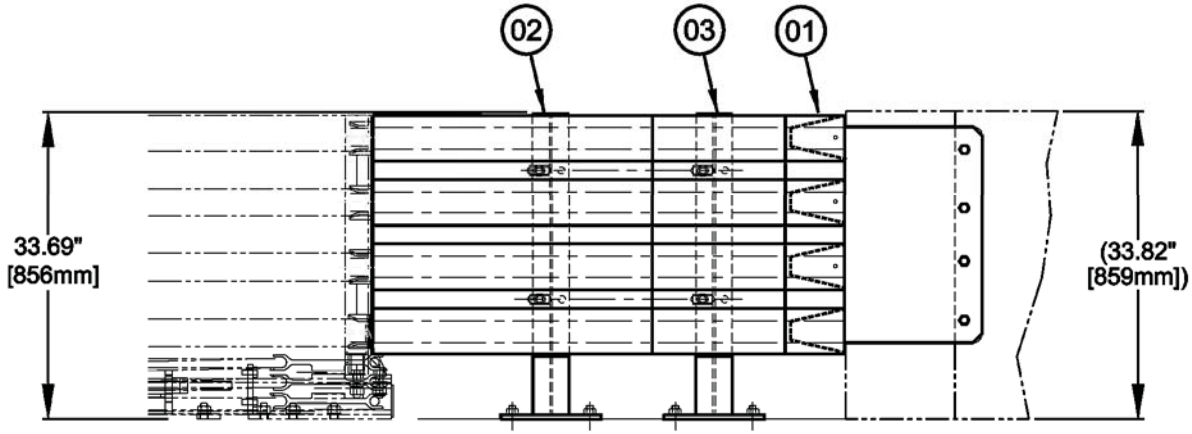

SIDE VIEW

USED FOR:
1. Unchamfered Concrete Block
2. Chamfered Concrete Block ***

***Chamfer limited to <4"

APPENDIX J2 - TRANSITION, CONCRETE BLOCK, 36 INCH (915mm)

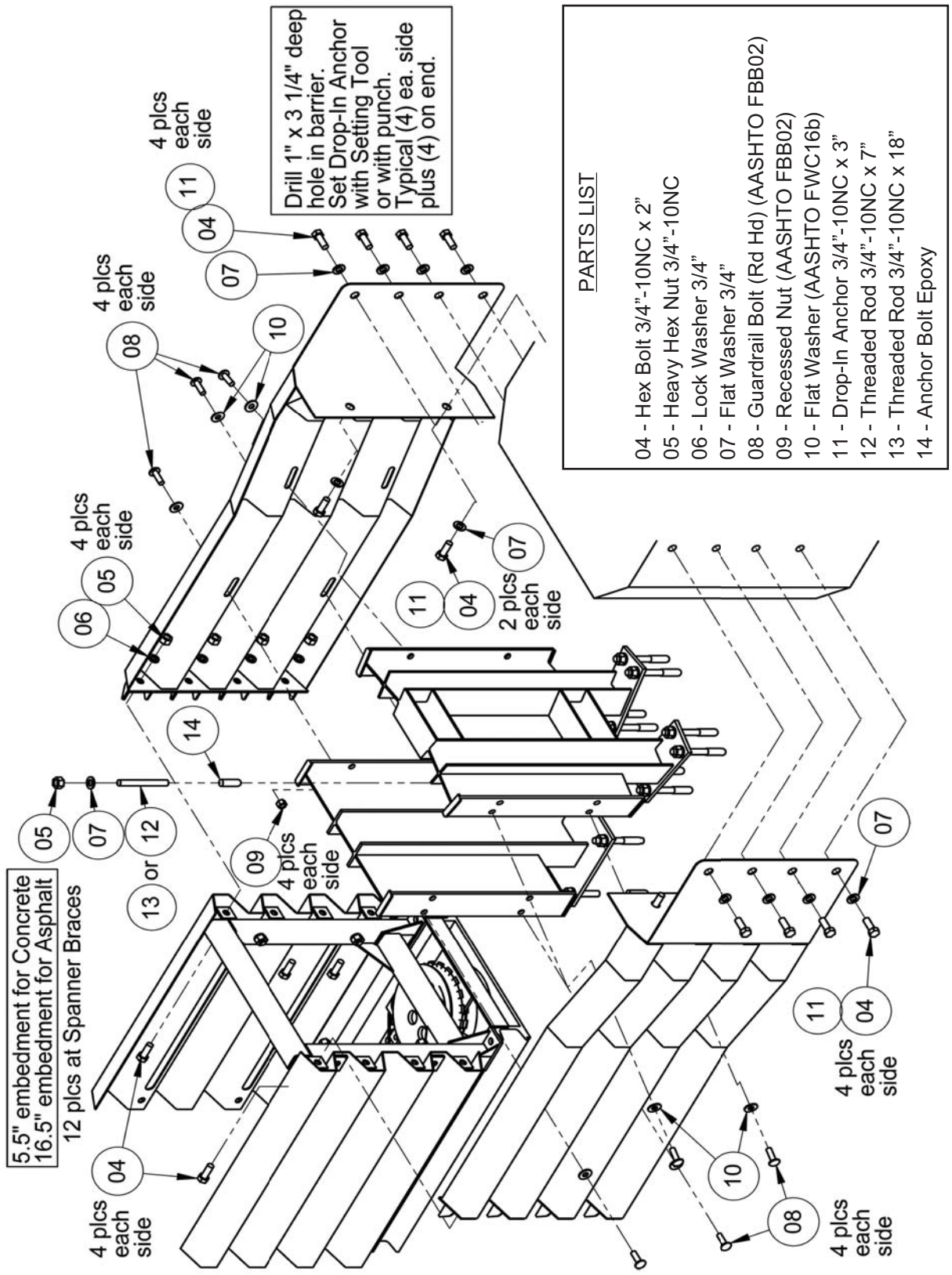

APPENDIX K - TRANSITION, CONCRETE BLOCK, 30 INCH (762mm) FLARED

PARTS LIST

Two Sided Full Assembly #9461
01 - Transition 30" Concrete Outside Connection #9465
02 - Transition Concrete Spanner Brace # 9469
03 - Transition Concrete #1 Tapered Spanner Brace #9470

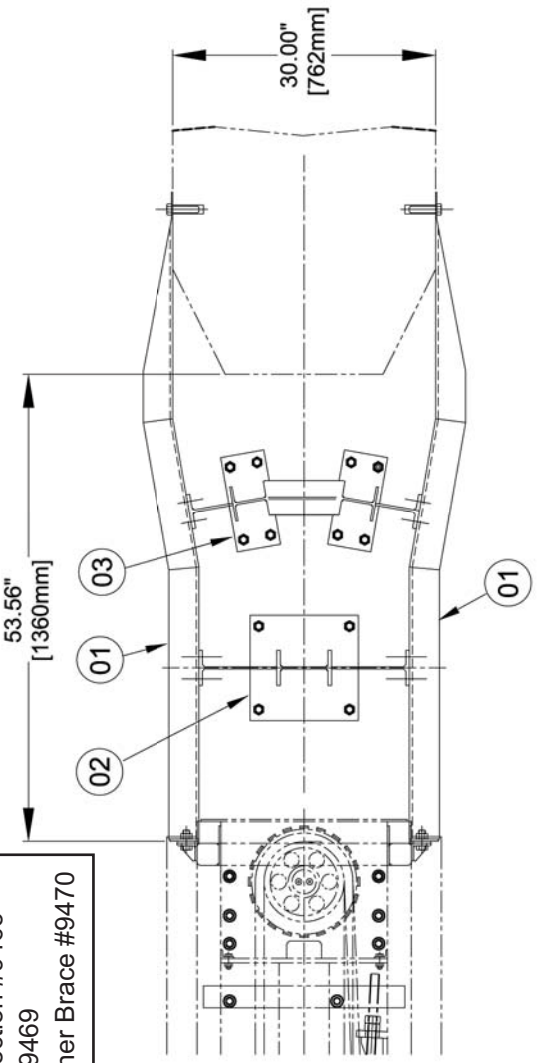

PLAN VIEW

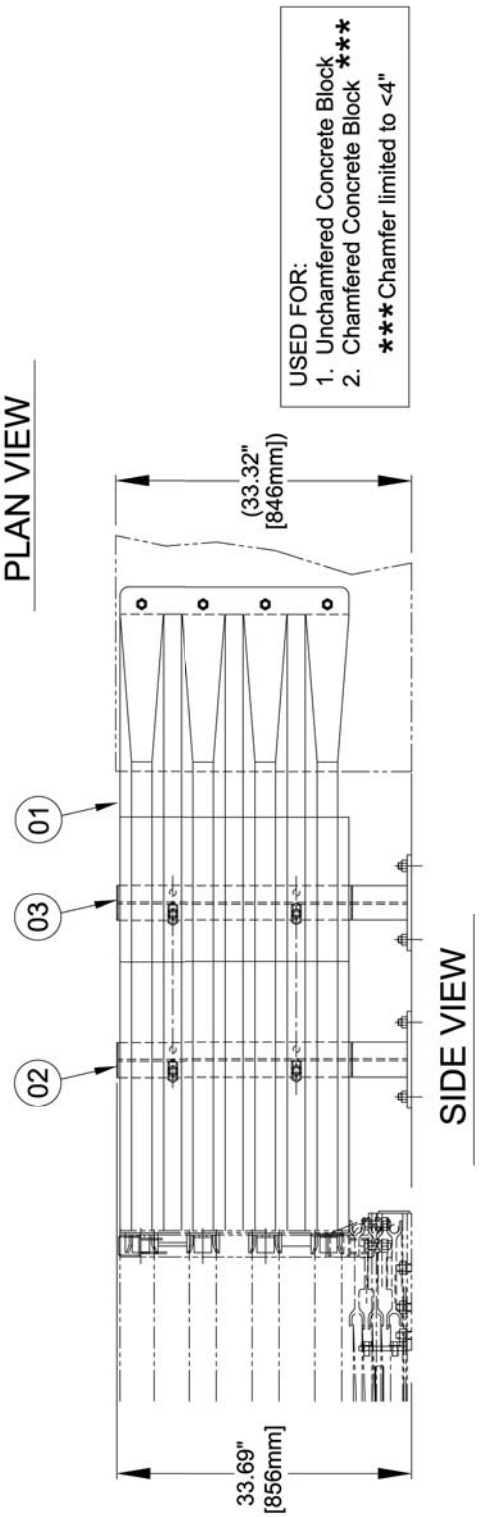

SIDE VIEW

APPENDIX K(2) - TRANSITION, CONCRETE BLOCK, 30 INCH (762mm) FLARED

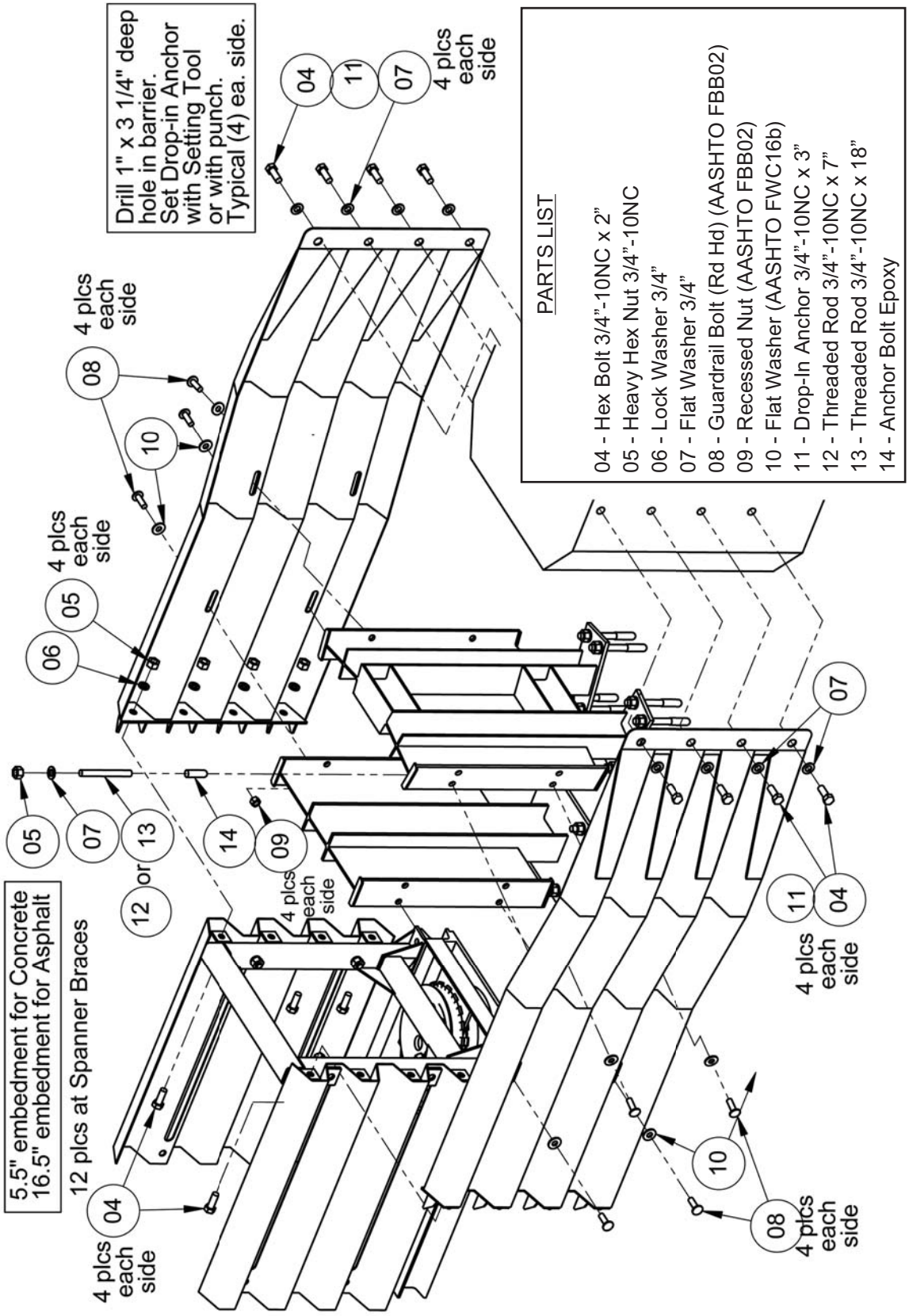

APPENDIX L - TRANSITION, CONCRETE BLOCK, 36 INCH (915mm) FLARED

PARTS LIST

Two Sided Full Assembly #9462
01 - Transition 36" Concrete Outside Connection #9466
02 - Transition Concrete Spanner Brace # 9469
03 - Transition Concrete #1 Tapered Spanner Brace #9470
04 - Transition Concrete #2 Tapered Spanner Brace #9471

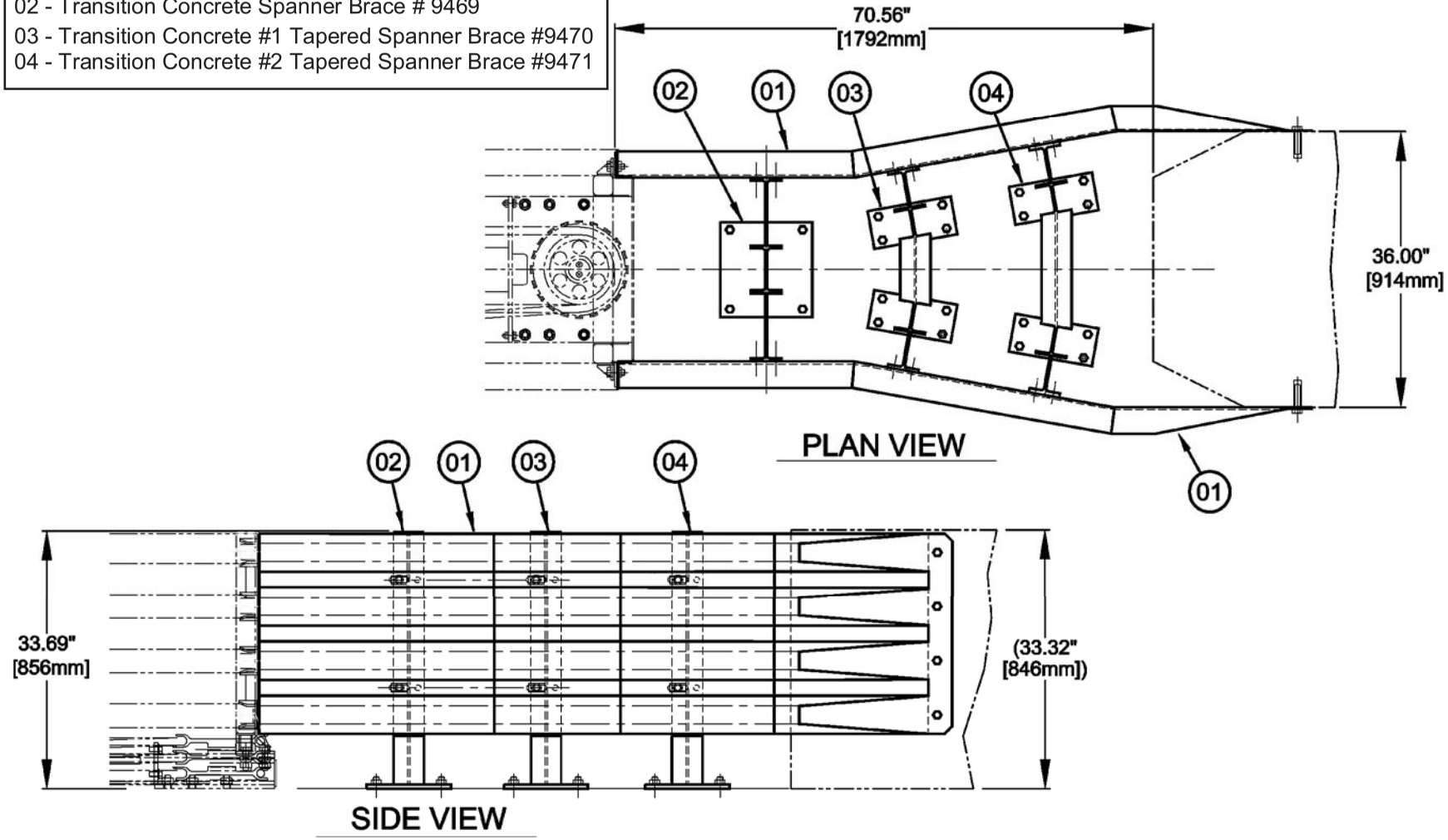

APPENDIX L(2) - TRANSITION, CONCRETE BLOCK, 36 INCH (915mm) FLARED

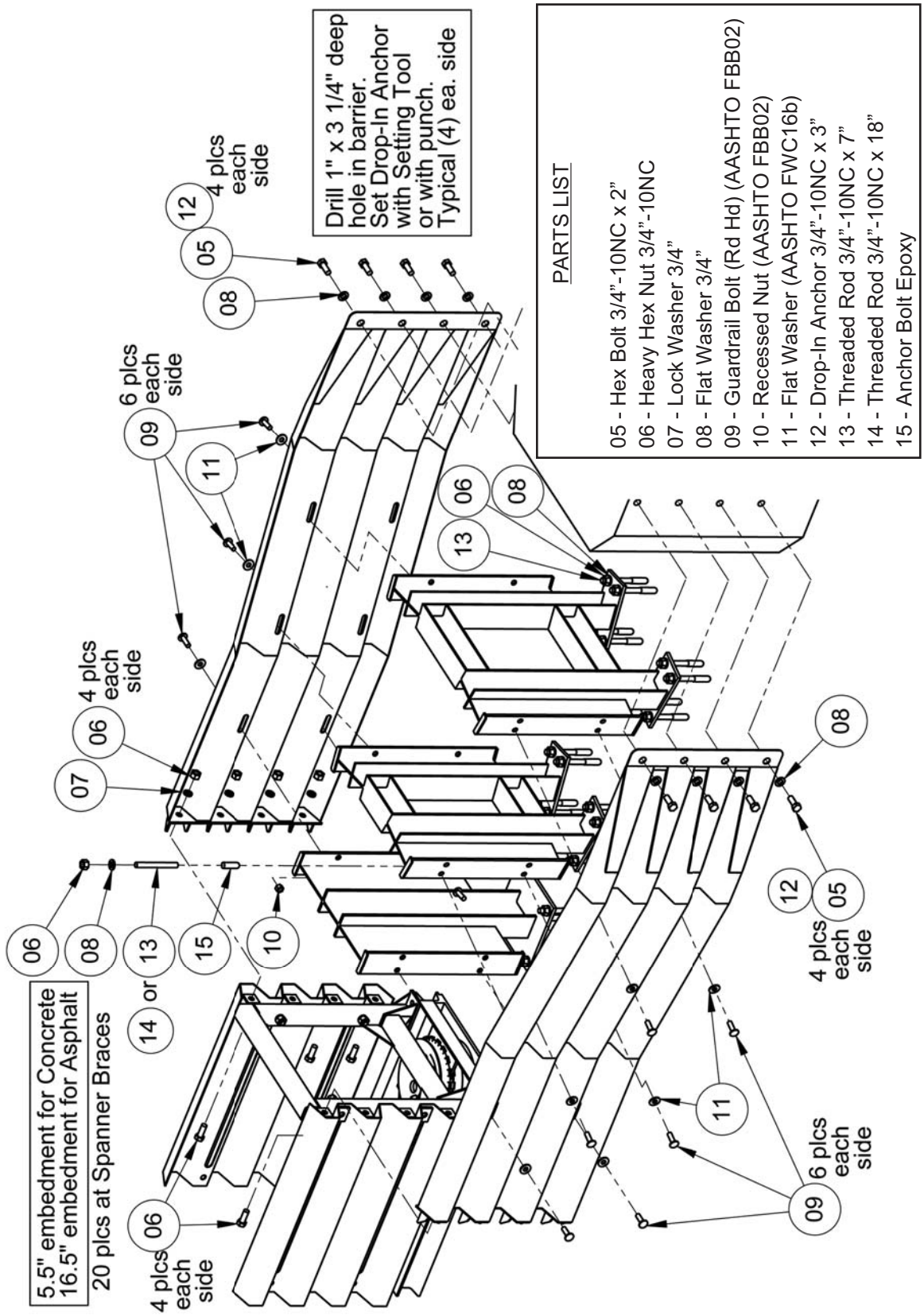

APPENDIX M - TRANSITION, THRIE BEAM

PARTS LIST

01 - Transition Thrie & W Beam - Right #9437
01 - Transition Thrie & W Beam - Left #9438

GUARDRAILS, POSTS, BLOCKOUTS AND CONNECTION BOLTS SUPPLIED BY OTHERS

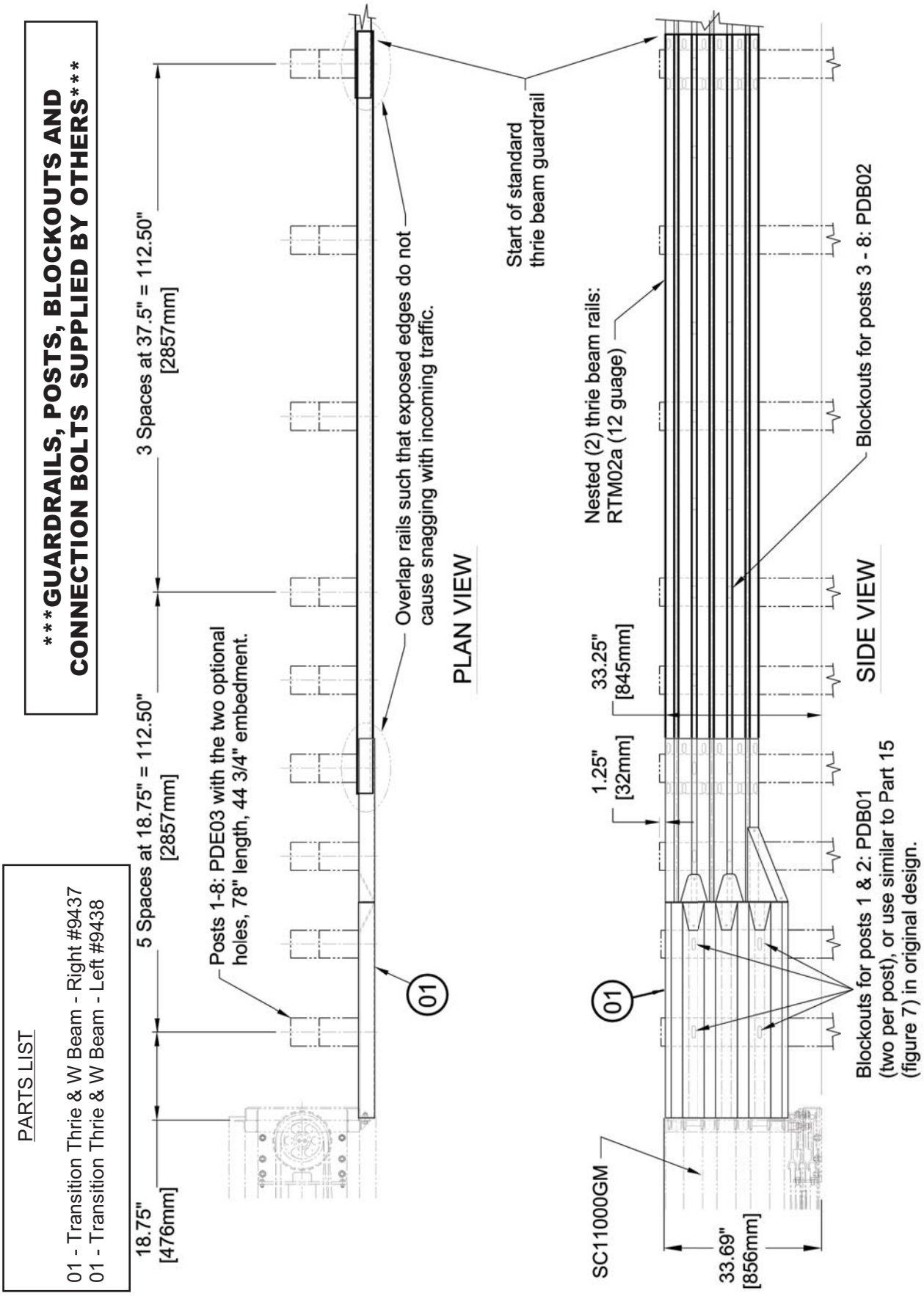

APPENDIX M(2) - TRANSITION, THRIE BEAM

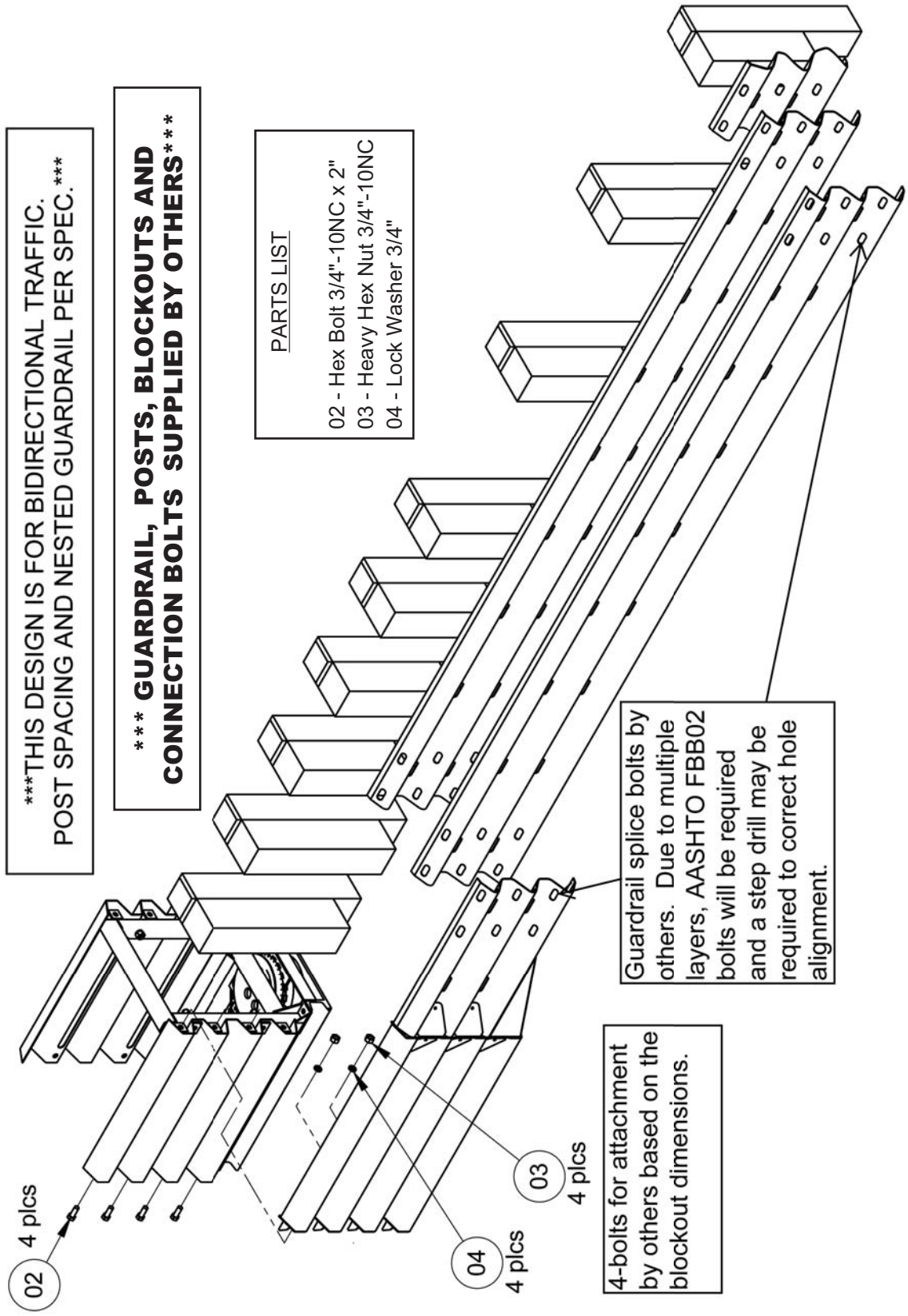

APPENDIX N - TRANSITION, W BEAM
***FOR USE WITH REVERSE DIRECTION TRAFFIC ***

***** GUARDRAIL, POSTS, BLOCKOUTS AND CONNECTION BOLTS SUPPLIED BY OTHERS*****

PARTS LIST

01 - Transition Thrie & W Beam - Right #9437
01 - Transition Thrie & W Beam - Left #9438

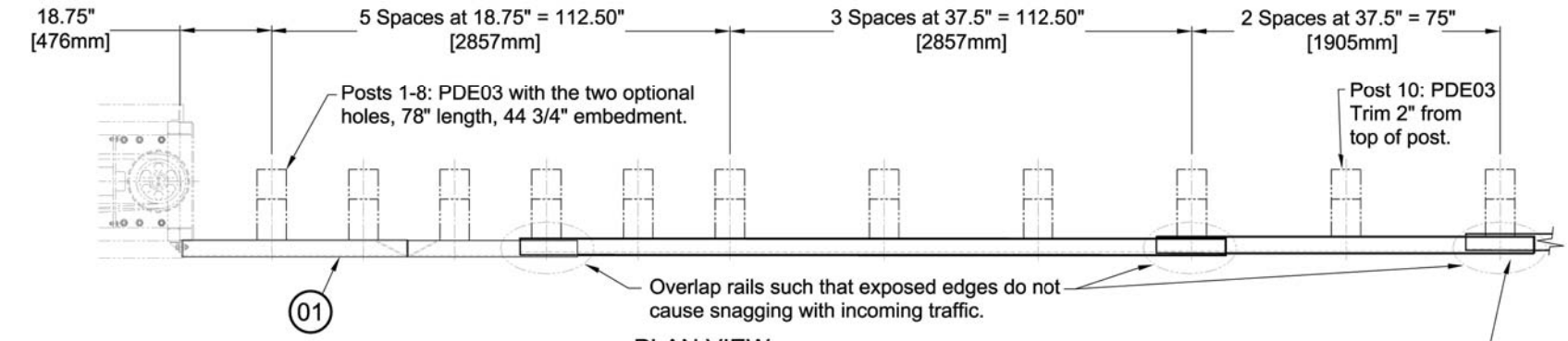

PLAN VIEW

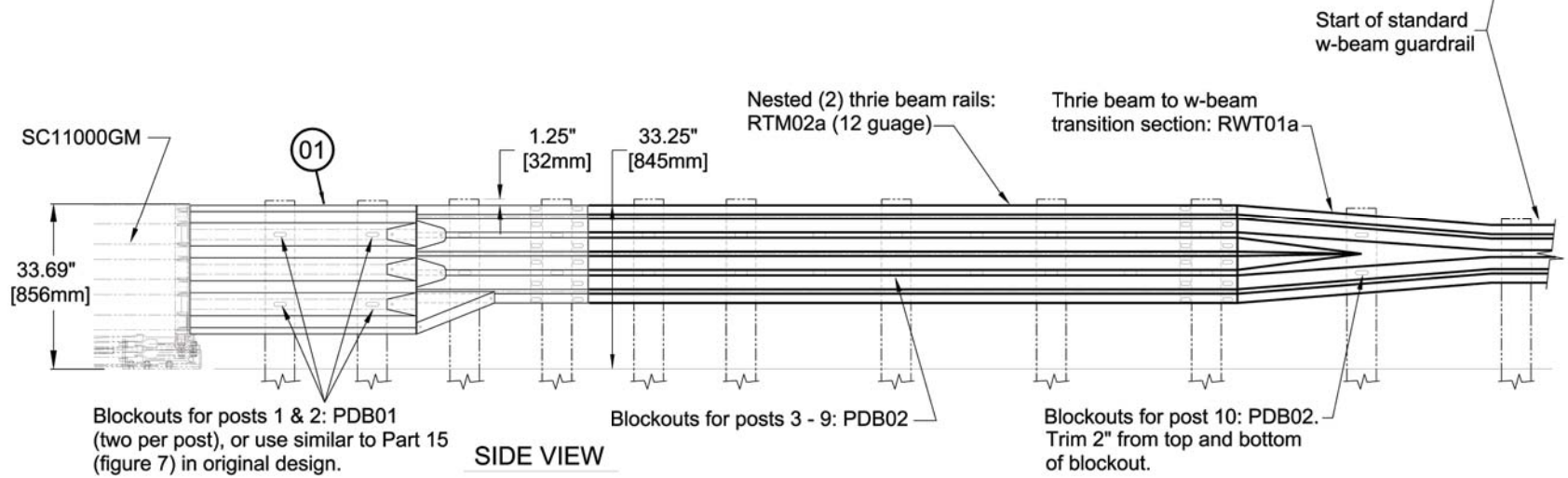

SIDE VIEW

APPENDIX N(2) - TRANSITION, W BEAM

***THIS DESIGN IS FOR BIDIRECTIONAL TRAFFIC.
POST SPACING AND NESTED GUARDRAIL PER SPEC.***

***** GUARDRAIL POSTS, BLOCKOUTS AND CONNECTION BOLTS SUPPLIED BY OTHERS*****

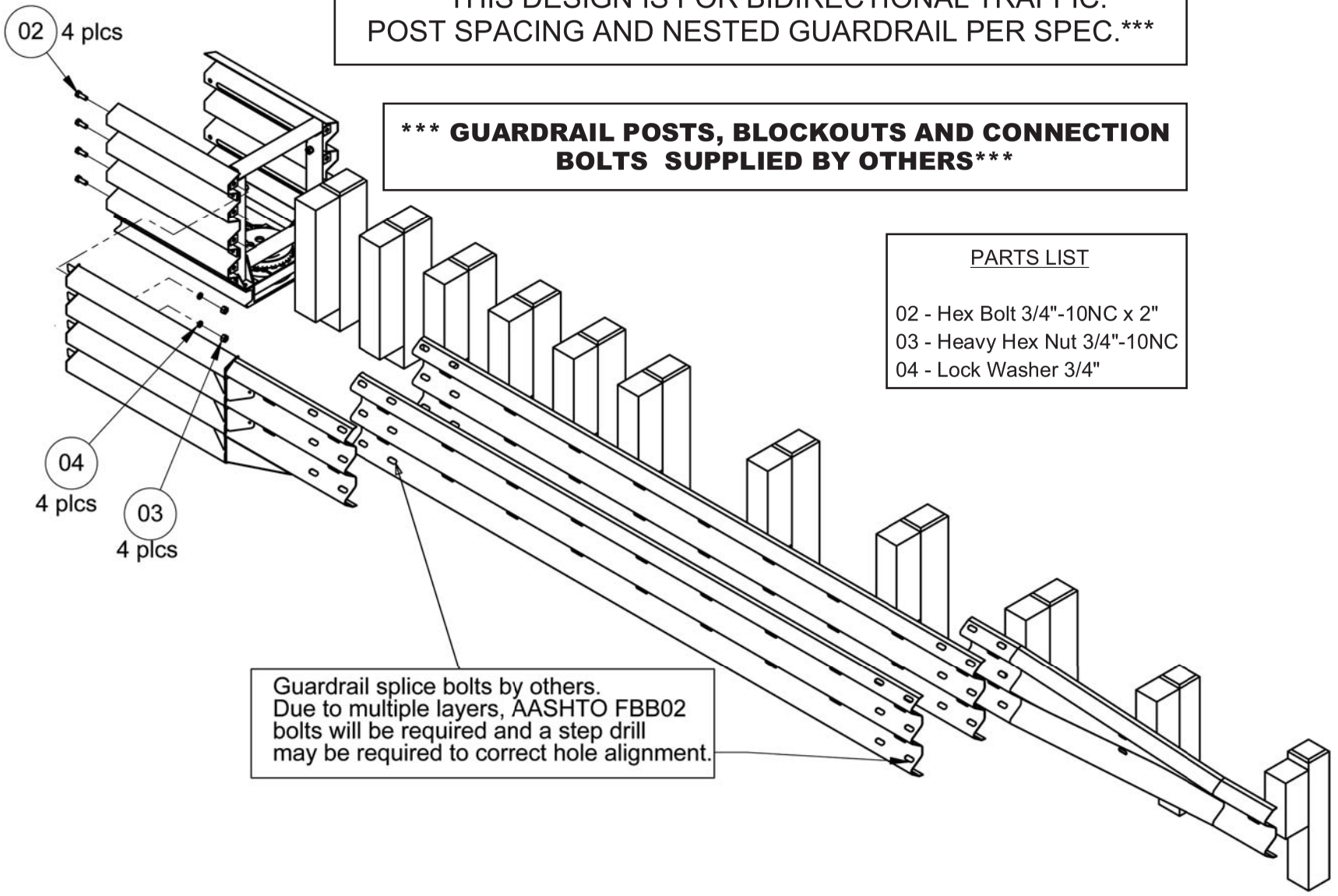

PARTS LIST

02 - Hex Bolt 3/4"-10NC x 2"
03 - Heavy Hex Nut 3/4"-10NC
04 - Lock Washer 3/4"

APPENDIX O - TRANSITION, JERSEY/F SHAPE, VARIABLE WIDTH BASE

PARTS LIST

Double Sided Median Base 30"-38" Base:
Two Sided Full Assembly
With Rub Rail #9528
Without Rub Rail #9535
01 - Transition - Left #9494
02 - Transition - Right #9493
03 - Transition Rub Rail - Left #9481
04 - Transition Rub Rail - Right #9480
05 - Transition Support Bracket - Right #9526
06 - Transition Support Bracket - Left #9527

For use with barriers with base widths of 30"-38"
Rub rails only required for base widths > 34"

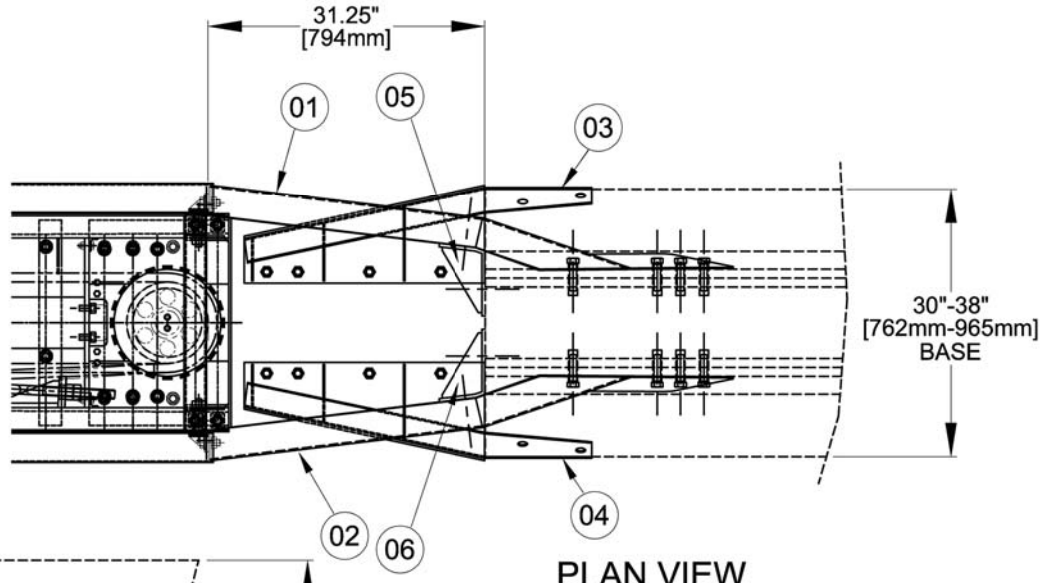

PLAN VIEW

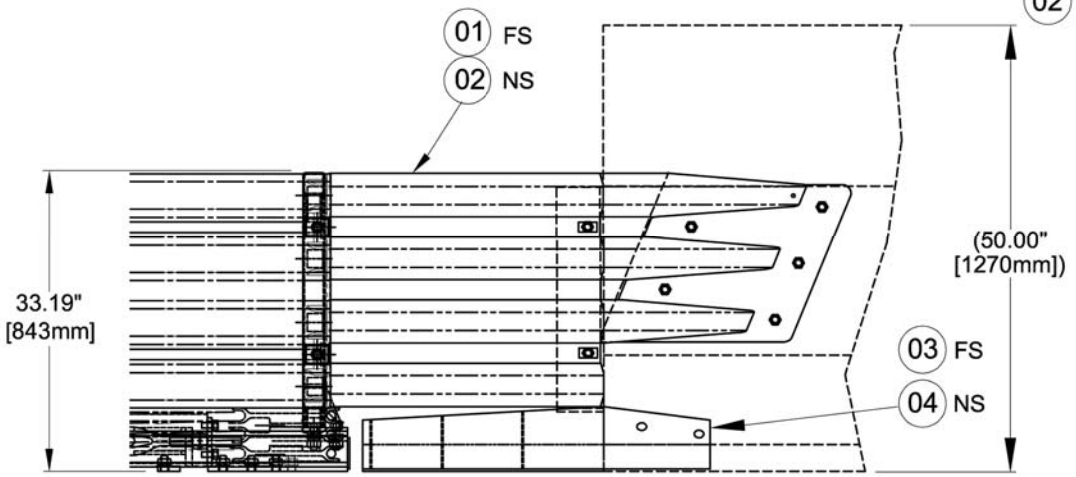

SIDE VIEW

APPENDIX O(2) - TRANSITION, JERSEY/F SHAPE, VARIABLE WIDTH BASE

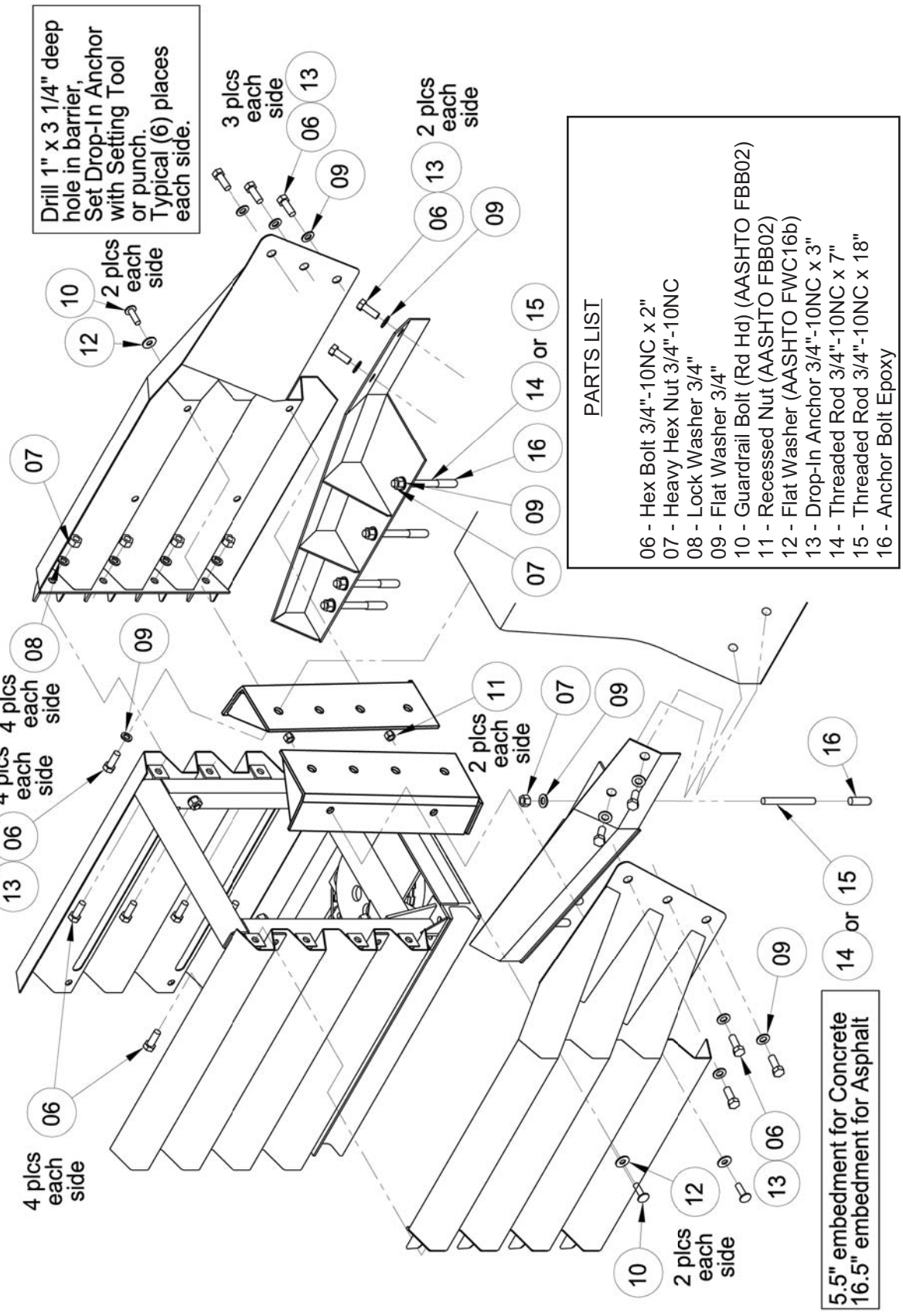

APPENDIX P - TRANSITION, MEDIAN BARRIER, SINGLE SLOPE

PARTS LIST

01 - Transition Single Slope Barrier - Right #9490
01 - Transition Single Slope Barrier - Left #9491

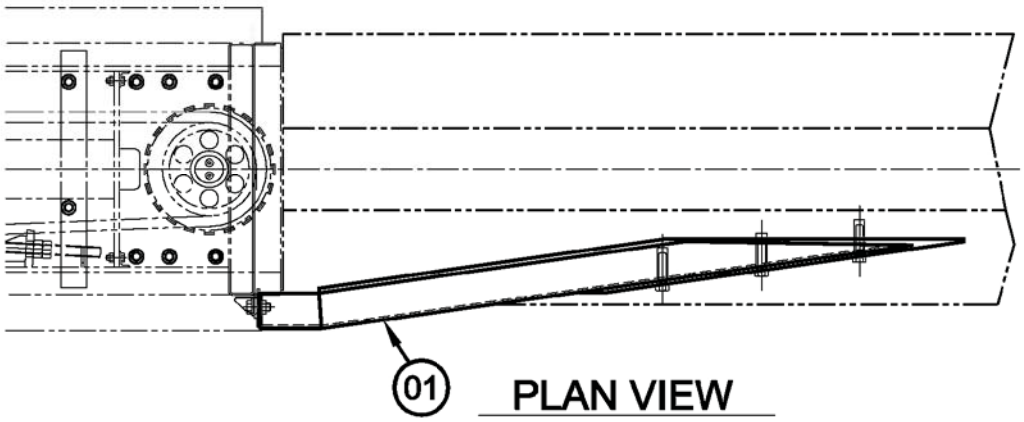

PLAN VIEW

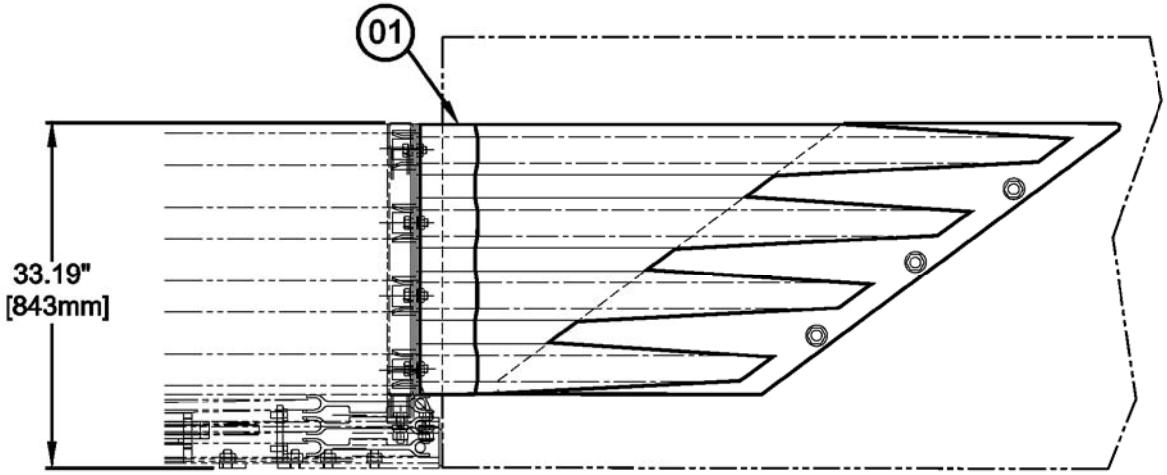

SIDE VIEW

APPENDIX P(2) - TRANSITION, MEDIAN BARRIER, SINGLE SLOPE

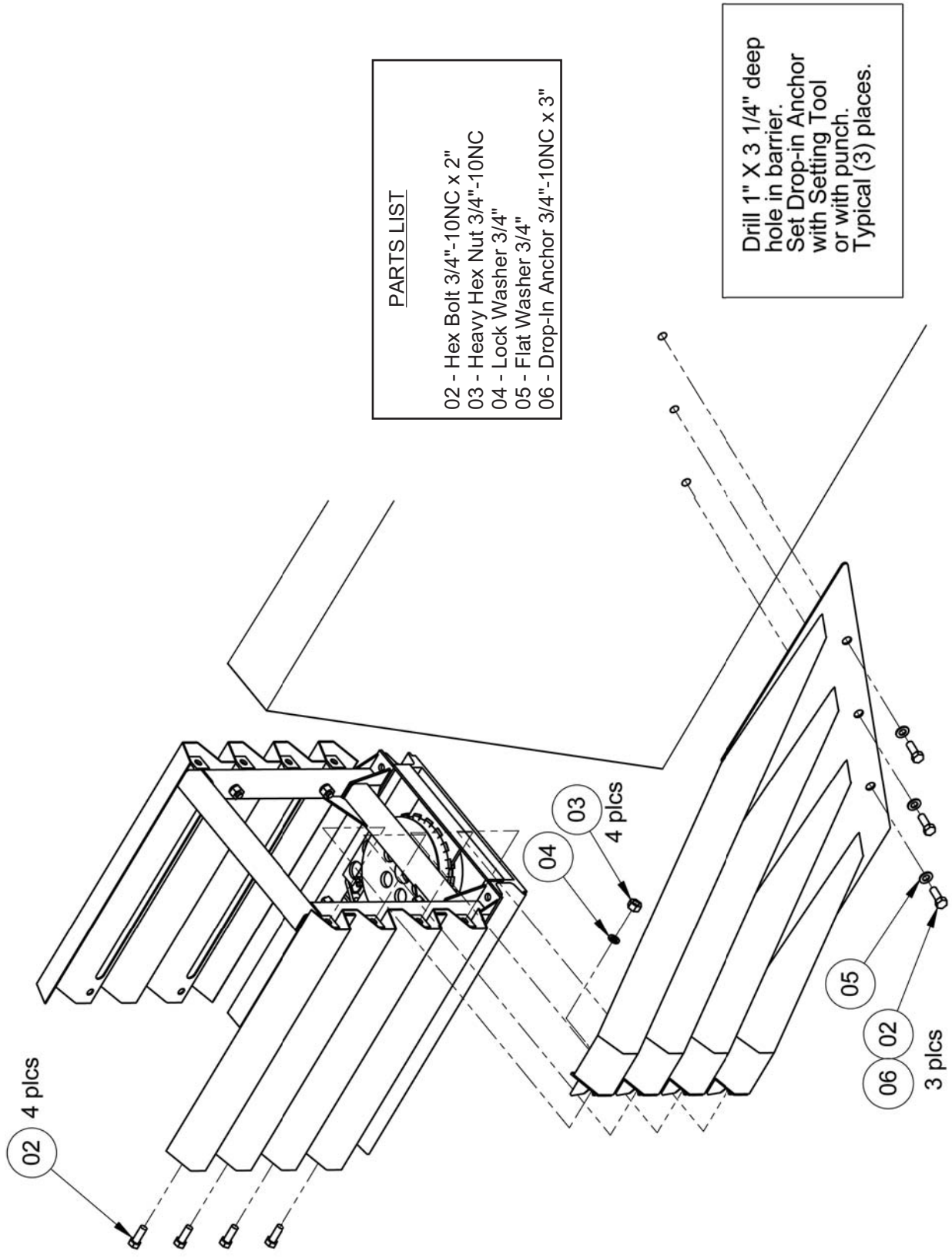

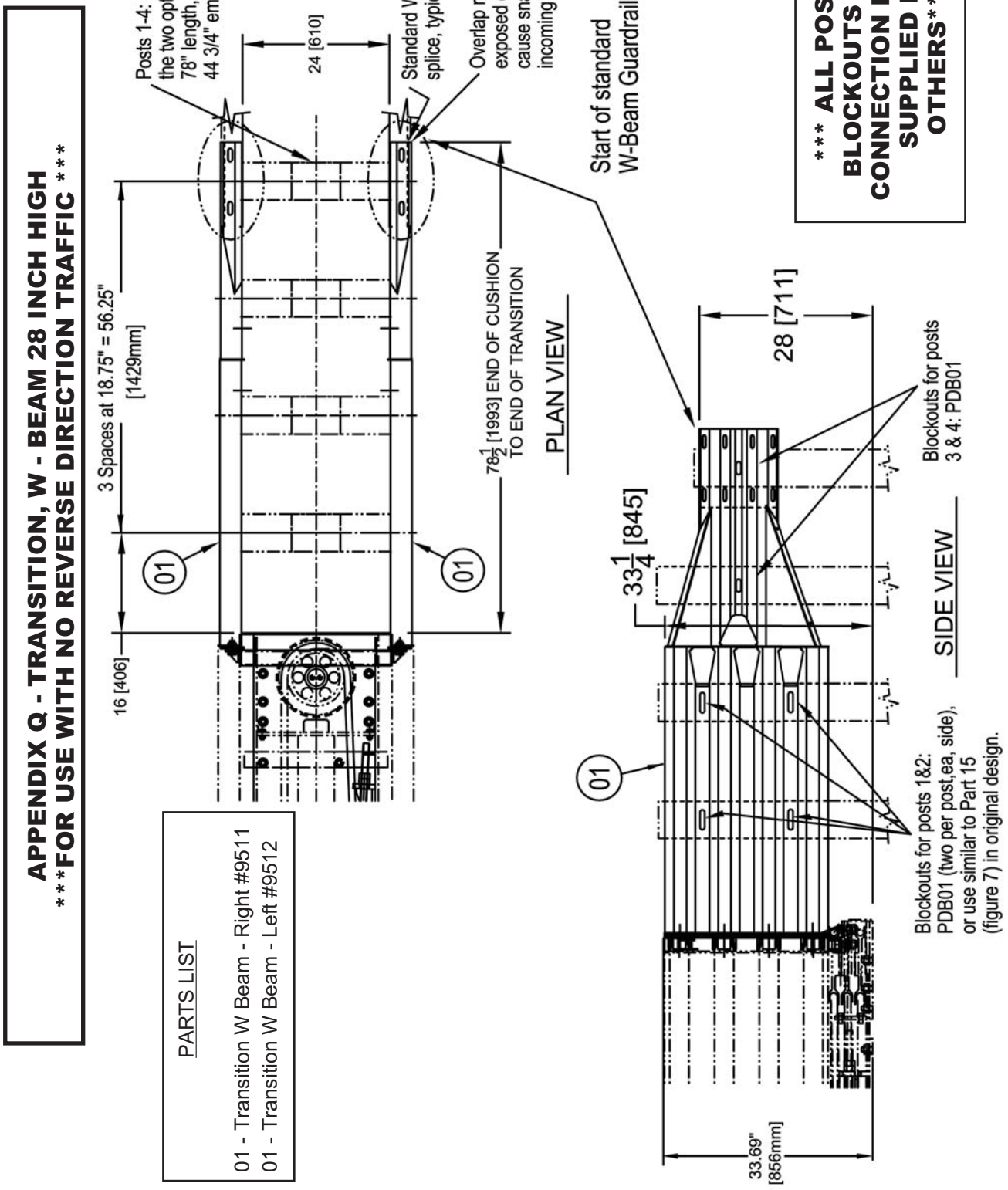
APPENDIX Q - TRANSITION, W - BEAM 28 INCH HIGH
***FOR USE WITH NO REVERSE DIRECTION TRAFFIC ***
PARTS LIST
01 - Transition W Beam - Right #9511
01 - Transition W Beam - Left #9512
Posts 1-4: PDE03 with the two optional holes, 78" length, 44 3/4" embedment
24 [610]
Standard W-Beam splice, typical both sides
Overlap rails such that exposed edges do not cause snagging with incoming traffic
3 Spaces at 18.75" = 56.25" [1429mm]
16 [406]
78½ [1993] END OF CUSHION TO END OF TRANSITION
Start of standard W-Beam Guardrail
PLAN VIEW
*** ALL POSTS, BLOCKOUTS AND CONNECTION BOLTS SUPPLIED BY OTHERS***
28 [711]
33¼ [845]
Blockouts for posts 3 & 4: PDB01
Blockouts for posts 1&2: PDB01 (two per post,ea, side), or use similar to Part 15 (figure 7) in original design.
SIDE VIEW
33.69" [856mm]
01

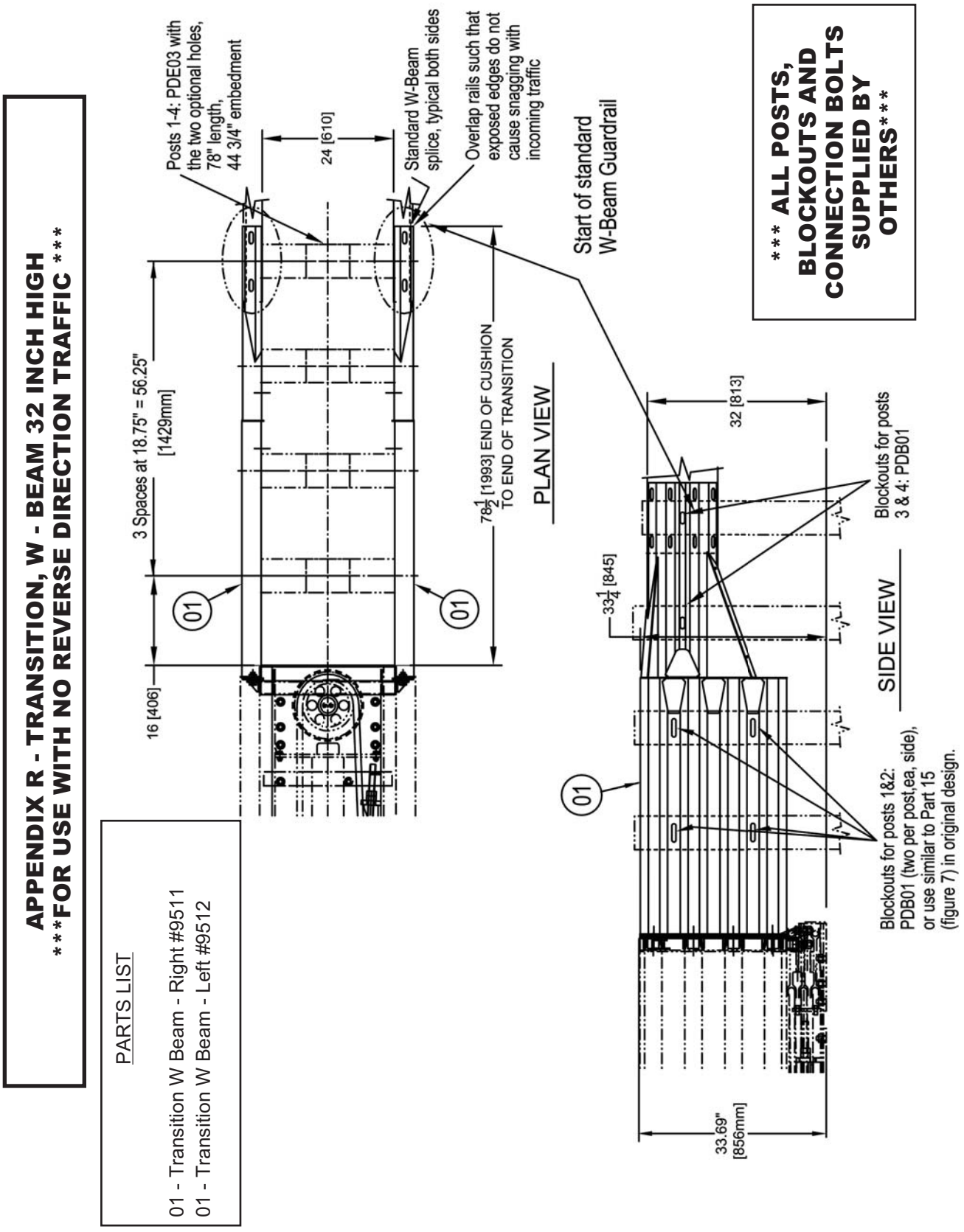
APPENDIX R - TRANSITION, W - BEAM 32 INCH HIGH
***FOR USE WITH NO REVERSE DIRECTION TRAFFIC ***
PARTS LIST
01 - Transition W Beam - Right #9511
01 - Transition W Beam - Left #9512
Posts 1-4: PDE03 with the two optional holes, 78" length, 44 3/4" embedment
24 [610]
Standard W-Beam splice, typical both sides
Overlap rails such that exposed edges do not cause snagging with incoming traffic
3 Spaces at 18.75" = 56.25" [1429mm]
16 [406]
78½ [1993] END OF CUSHION TO END OF TRANSITION
Start of standard W-Beam Guardrail
PLAN VIEW
*** ALL POSTS, BLOCKOUTS AND CONNECTION BOLTS SUPPLIED BY OTHERS***
32 [813]
33¼ [845]
Blockouts for posts 3 & 4: PDB01
Blockouts for posts 1&2: PDB01 (two per post,ea, side), or use similar to Part 15 (figure 7) in original design.
SIDE VIEW
33.69" [856mm]

APPENDIX Q(2) & R(2) - TRANSITION, W-BEAM 28" & 32" HIGH

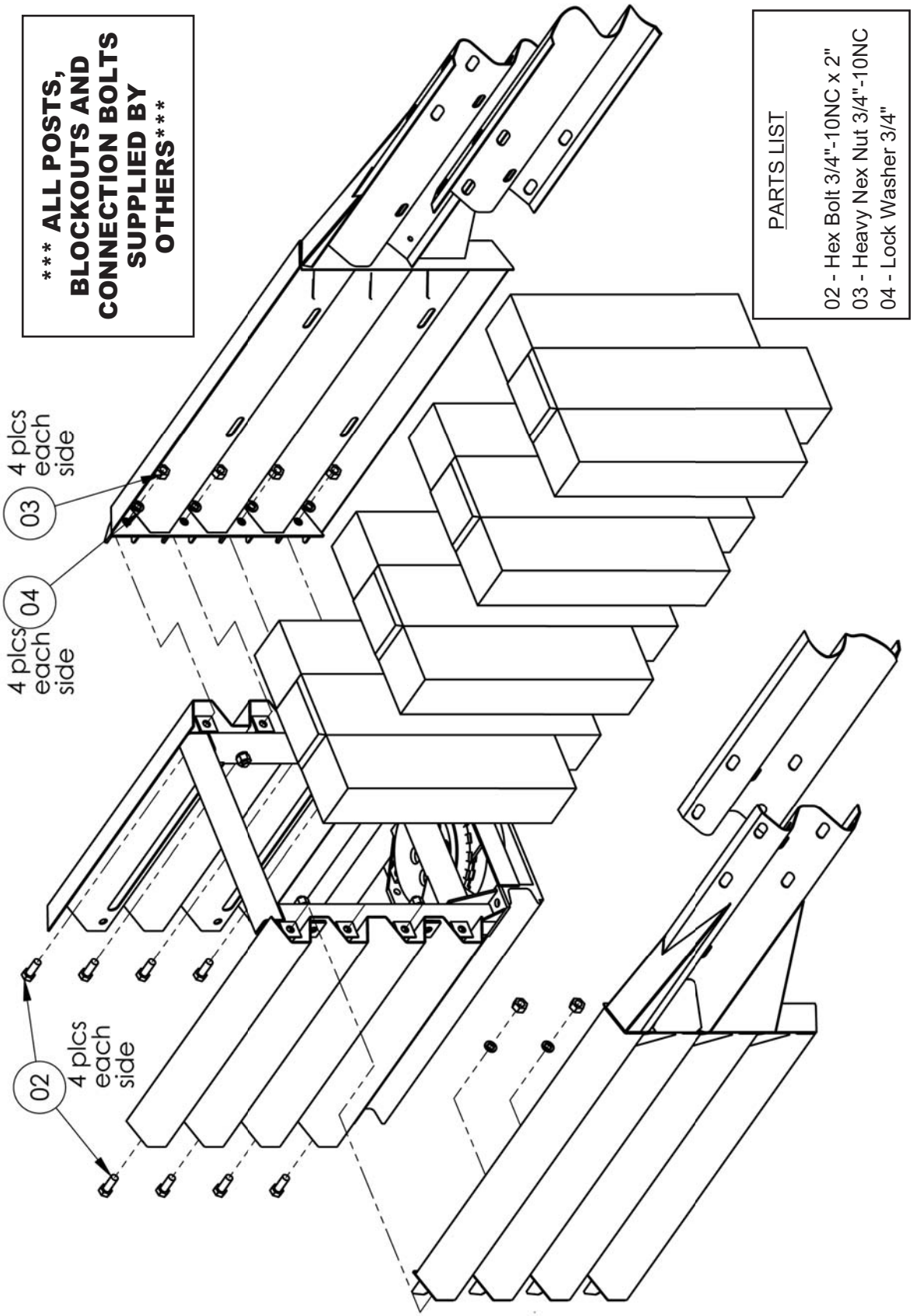

APPENDIX S - TRANSITION, WIDE BLOCK SPANNER

PARTS LIST

01 - Spanner Transition to Wide Block Right (shown)
& Left #9537 (opposite)

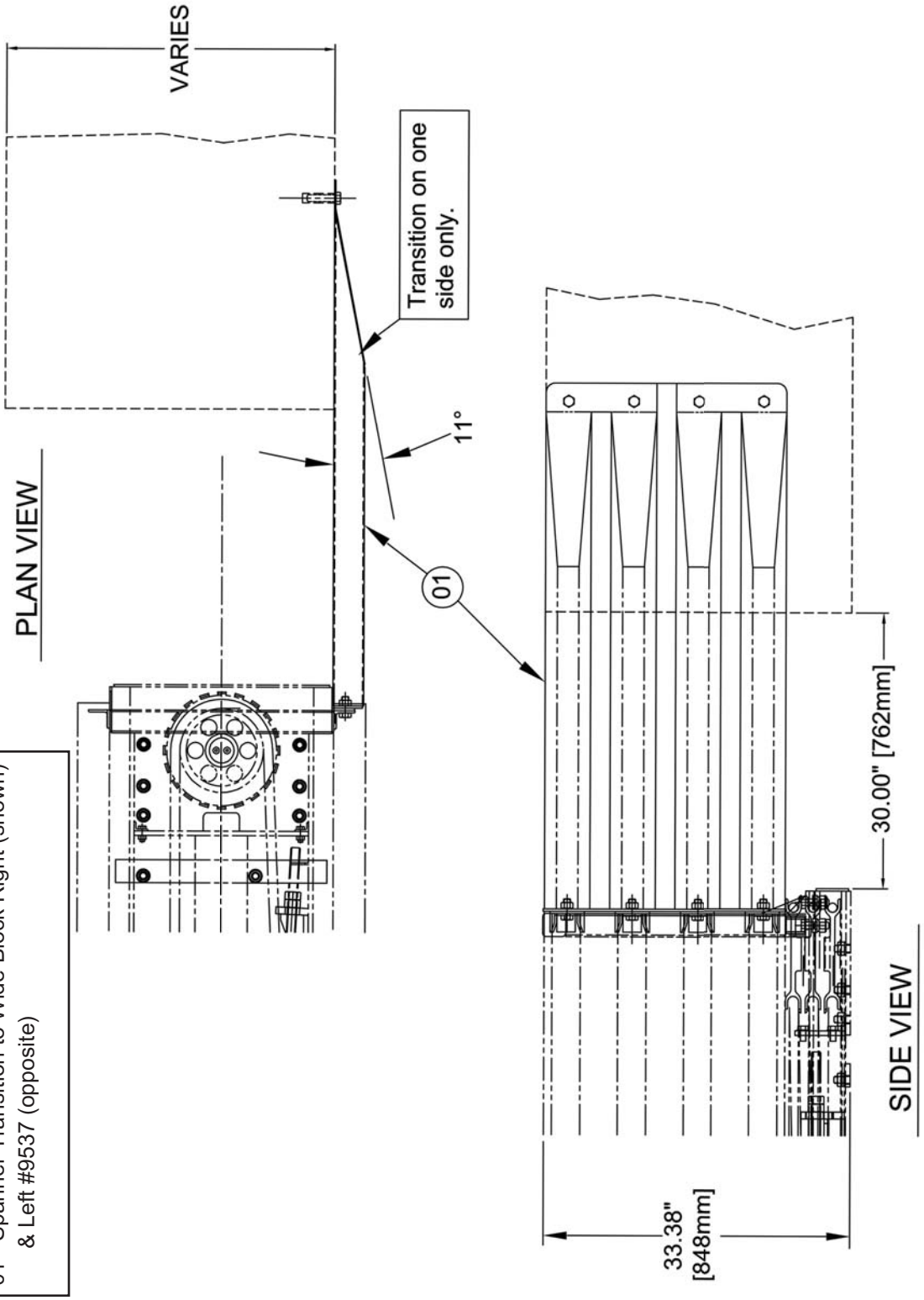

APPENDIX S(2) - TRANSITION, WIDE BLOCK SPANNER

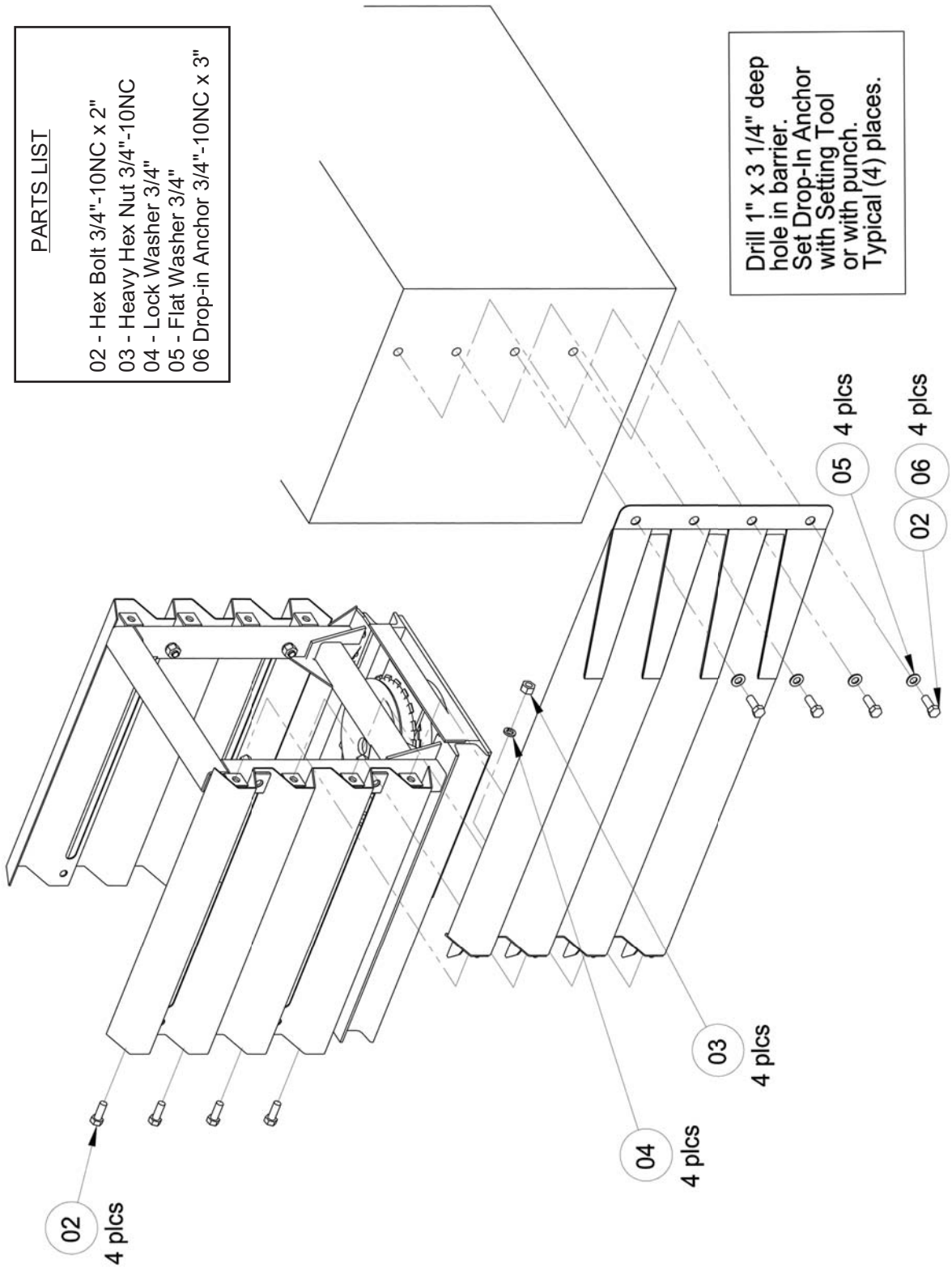

SCI Products Inc.

SCI70/100GM CRASH CUSHION COMMERCIAL 1-YEAR WARRANTY

SCI PRODUCTS INC. warrants this product to be free from defects in material and workmanship under normal use and service for a period of one (1) year beginning on the date of installation. SCI PRODUCTS INC. will repair or replace without charge to the original customer any defective component. This is the sole and exclusive remedy.

This warranty is contingent upon proper use of the System and does not cover Systems that have been modified (including the addition of parts) without the approval of SCI PRODUCTS INC. or which are in need of repair due to damage from external cause, including accident, collision, improper handling, improper transporting, failure to properly maintain the System as recommended by SCI PRODUCTS INC., abuse, misuse or which have been damaged by outside parties not employed by SCI PRODUCTS INC., whether in installation or otherwise.

THIS IS A LIMITED WARRANTY AND IT IS THE ONLY WARRANTY MADE BY SCI PRODUCTS INC. SCI PRODUCTS INC. MAKES, AND CUSTOMER RECEIVES, NO OTHER WARRANTY, EXPRESS OR IMPLIED, INCLUDING BUT NOT LIMITED TO THE IMPLIED WARRANTIES OR MERCHANTABILITY AND FITNESS FOR A PARTICULAR PURPOSE. SCI PRODUCTS INC. SHALL HAVE NO LIABILITY WITH RESPECT TO ITS OBLIGATIONS UNDER THIS WARRANTY FOR CONSEQUENTIAL, EXEMPLARY OR INCIDENTAL DAMAGES EVEN IF IT HAS BEEN ADVISED OF THE POSSIBILITY OF SUCH DAMAGES. THERE ARE NO WARRANTIES WHICH EXTEND BEYOND THIS DOCUMENT WITH RESPECT TO THE PRODUCT INDICATED ABOVE. BUYER ACKNOWLEDGES THAT ANY STATEMENTS MADE WHICH ARE NOT FOUND IN THIS DOCUMENT ARE NOT PROMISES TO BE RELIED UPON.

THE BUYER AGREES TO INSPECT THE PRODUCT ON RECEIPT AS FULLY AS THE BUYER DESIRES AND TO NOTIFY SCI PRODUCTS INC. OF ANY REVEALED DEFECT.

WORK AREA PROTECTION CORP. EST. 1969

Marketed and Distributed by

Work Area Protection

ATT2013

DIST	COUNTY	ROUTE	POST MILES TOTAL PROJECT	SHEET NO.	TOTAL SHEETS
07	LA	91	6.5/ 4.6	66	127

Alebachew Bekele
REGISTERED ELECTRICAL ENGINEER

6-15-98
PLANS APPROVAL DATE

The State of California or its officers or agents shall not be responsible for the accuracy or completeness of electronic copies of this plan sheet.

REGISTERED PROFESSIONAL ENGINEER ALEBACHEW BEKELE No. E 533 Exp. 6/30/0 ELECTRICAL STATE OF CALIFORNIA

CONDUIT AND CONDUCTOR SCHEDULE (THIS SHEET ONLY)

CONDUCTOR TYPE	FUNCTION	RUN △1			△4
6P22 CABLE	DATA/PHONE				1
50P22 CABLE	DATA/PHONE	1			
36SMFO CABLE	VIDEO/DATA			1	
12SMFO CABLE	VIDEO/DATA		1		
	INNERDUCT		1 1/4"	1 1/4"	
	CONDUIT SIZE		4"		2"

CONSTRUCTION NOTES (THIS SHEET ONLY)

35 ADD 1 DLC IN EXISTING CONDUIT.

37 TERMINATE 1 DLC CABLE IN EXISTING CABINET & INSTALL 1 STATE-FURNISHED LOOP DETECTOR SENSOR UNIT.

49 REMOVE AND DISPOSE OF PULL BOX/HANDHOLE. FILL OPENING WITH PCC AND AC TO MATCH EXISTING (0.1'MIN AC).

59 SHOWN FOR REFERENCE ONLY. FOR INSTALLATION REFER TO SHEET E-24.

65 REUSE EXISTING DLC.

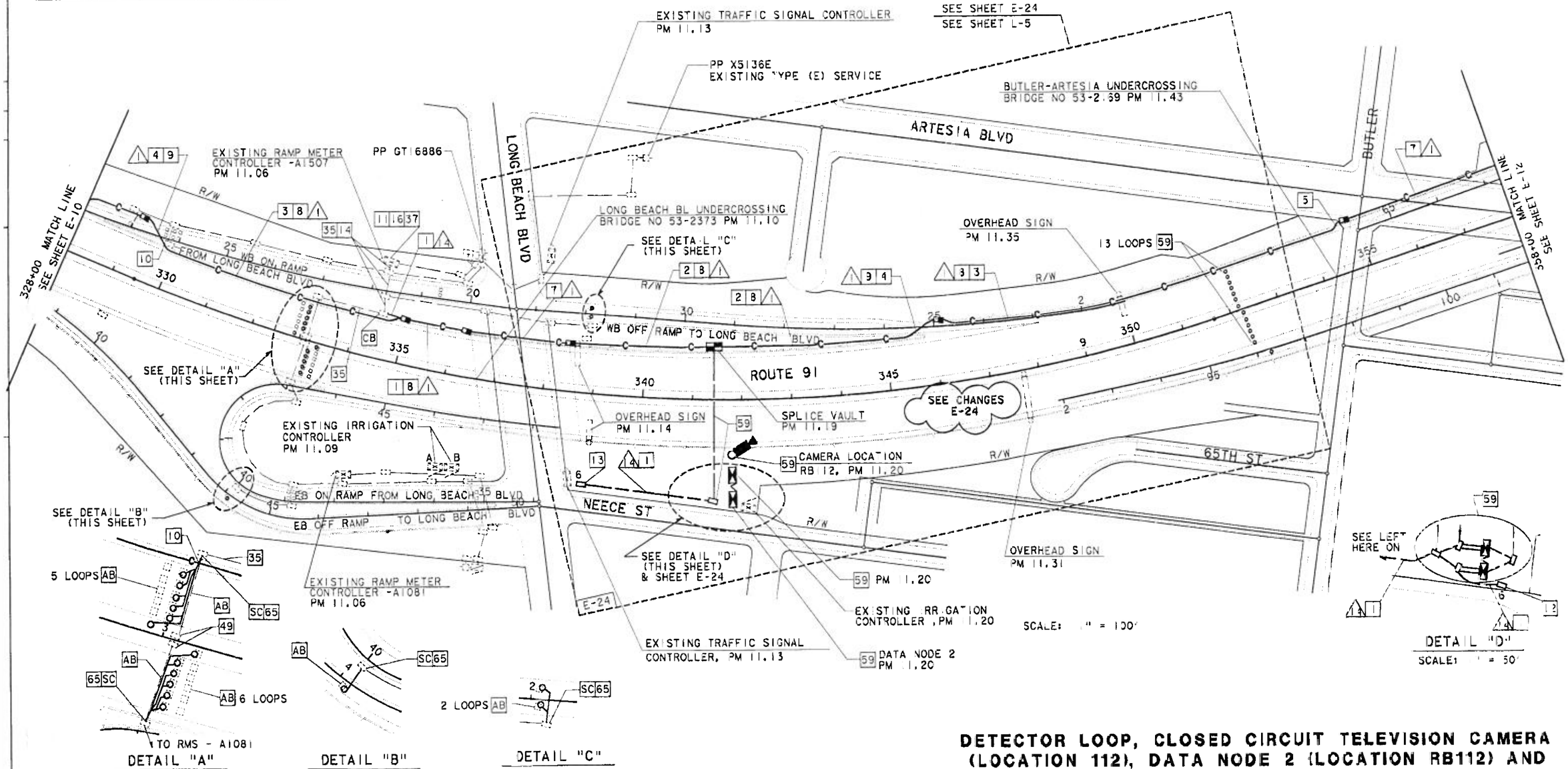

NOTE: THIS PLAN ACCURATE FOR ELECTRICAL WORK ONLY.
SEE SHEET E-1 FOR LEGEND AND PROJECT NOTES.
SEE SHEET J-11 FOR EXISTING UTILITIES.

DETECTOR LOOP, CLOSED CIRCUIT TELEVISION CAMERA (LOCATION 112), DATA NODE 2 (LOCATION RB112) AND COMMUNICATIONS SYSTEM ROUTING

SCALE AS SHOWN

E-11

LAST REVISION 08-12-97 DATE PLOTTED => 27-AUG-2001 TIME PLOTTED => 09:33

FOR REDUCED PLANS ORIGINAL SCALE IS IN INCHES 0 2 3

USERNAME => SCruz
DGN FILE => 712098U1127093136

CL 07396 EA 120981

DE-92-PF (REV. 3/88)

DIST	COUNTY	ROUTE	POST MILES TOTAL PROJECT	SHEET NO.	TOTAL SHEETS
07	LA	9	5.5/14.6	67	27

Alebachew Bekele
REGISTERED ELECTRICAL ENGINEER

6-13-98
PLANS APPROVAL DATE

ALEBACHEW BEKELE No. E15331 Exp. 3/30/0 ELECTRICAL STATE OF CALIFORNIA

The State of California or its officers or agents shall not be responsible for the accuracy or completeness of electronic copies of this plan sheet.

CONDUIT AND CONDUCTOR SCHEDULE (THIS SHEET ONLY)

CONDUCTOR TYPE	FUNCTION	RUN 1			RUN 6			RUN 7			RUN 4	RUN 11	RUN 25
6P22 CABLE	DATA/PHONE										1		
50P22 CABLE	DATA/PHONE	1			2			2					
36SMFO CABLE	VIDEO/DATA			1			2	2					
12SMFO CABLE	VIDEO/DATA		1										
DLC	DETECTOR LEAD-IN CABLE											6	C
	INNERDUCT	1 1/4"	1 1/4"		1 1/4"	1 1/4"							
	CONDUIT SIZE	4"			4"			2-4"			2"	3"	2"

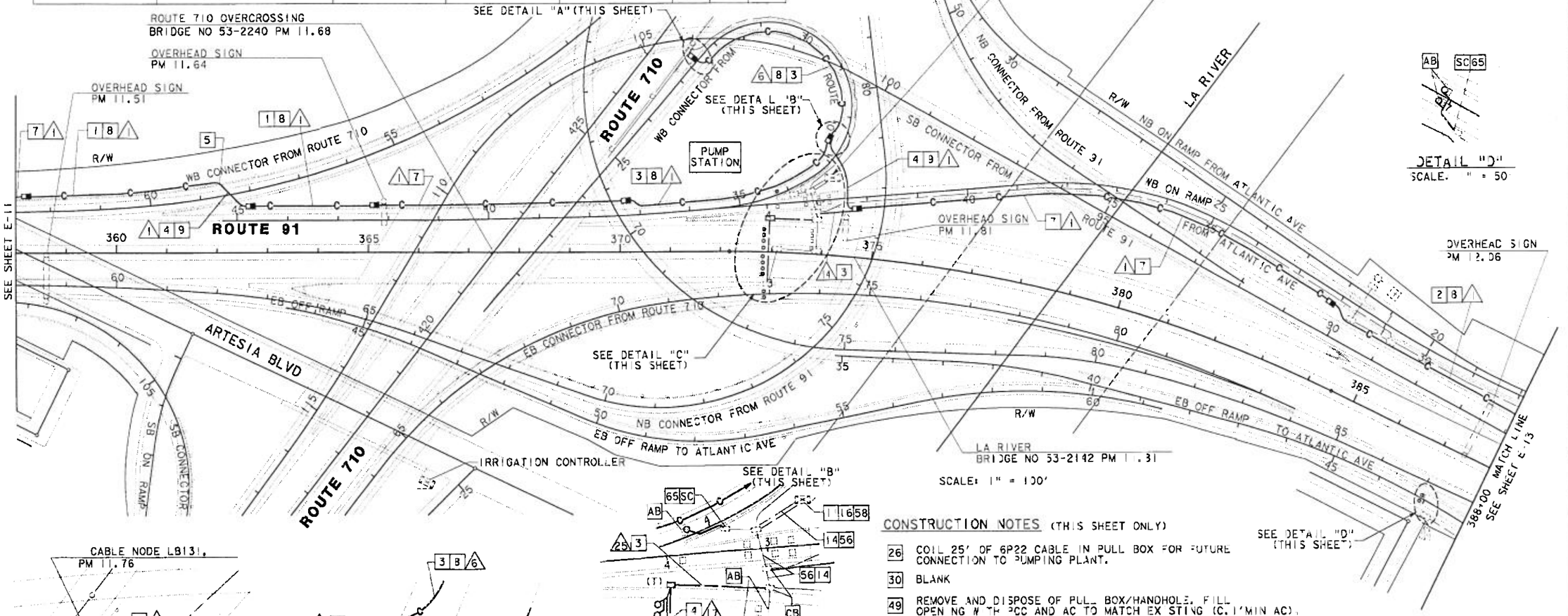

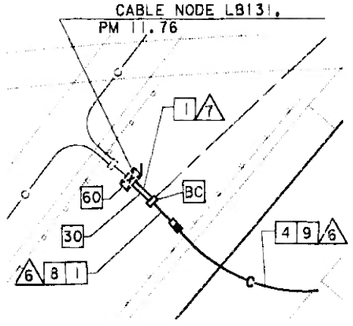

DETAIL "A"
SCALE: 1" = 10'

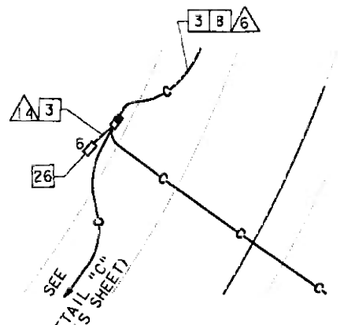

DETAIL "B"
SCALE: " = 10'

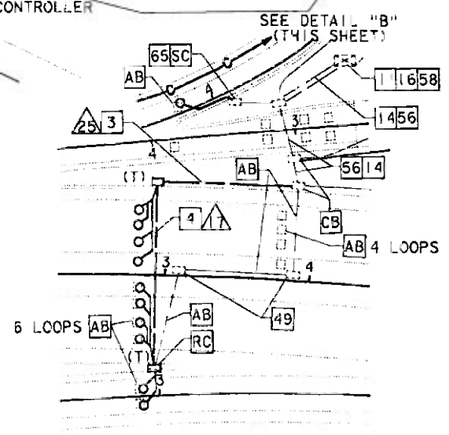

DETAIL "C"
SCALE: 1" = 50'

DETAIL "D"
SCALE: " = 50'

CONSTRUCTION NOTES (THIS SHEET ONLY)

26 COIL 25' OF 6P22 CABLE IN PULL BOX FOR FUTURE CONNECTION TO PUMPING PLANT.

30 BLANK

49 REMOVE AND DISPOSE OF PULL BOX/HANDHOLE. FILL OPENING WITH PCC AND AC TO MATCH EXISTING (C.I.P.M.I.N AC).

56 ADD 0 DLC, REMOVE 10 DLC FROM EXISTING CONDUIT.

58 TERMINATE 10 DLC IN EXISTING CABINET.

60 INSTALL 5-25 PAIR TERMINAL BLOCKS AND FIBER DISTRIBUTION FRAME WITH 72 OPTICAL BULKHEAD ADAPTERS IN CABLE NODE. TERMINATE (2)-36SMFO VIDEO/DATA AND (2)-50P22 CABLES.

65 REUSE EXISTING DLC.

AS-BUILT
Contract No. 07-: 120984
Resident Engineer: LUKE NGUYEN
Completion Date: 05/22/2001

DETECTOR LOOP, CABLE NODE LB131 AND COMMUNICATIONS SYSTEM ROUTING

NOTE: THIS PLAN ACCURATE FOR ELECTRICAL WORK ONLY. SEE SHEET E-1 FOR LEGEND AND PROJECT NOTES. SEE SHEET J-2 FOR EXISTING UTILITIES.

SCALE AS SHOWN

E-12

R	REVISED BY	DATE 6/97	HHT	CALCULATED/ DESIGNED BY	
	DATE REVISED		NT 6/97	CHECKED BY	

PROJECT ENG: PAT SULLIVAN

STATE OF CALIFORNIA - DEPARTMENT OF TRANSPORTATION
Caltrans

LAST REVISION 08 12 97 DATE PLOTTED = 24 JUN 1998 TIME PLOTTED = 14:56

FORM DC-OE-92-PF (REV. 3/88)

FOR REDUCED PLANS ORIGINAL SCALE IS IN INCHES 0 1 2 3

USERNAME => tmaurice
DGN FILE => 7120984u12_24_45120

CU 07396 EA 120981

DIST	COUNTY	ROUTE	POST MILES TOTAL PROJECT	SHEET NO.	TOTAL SHEETS
07	LA	9	6.5/14.6	68	27

REGISTERED ELECTRICAL ENGINEER

6-5-98
PLANS APPROVAL DATE

"The State of California or its officers or agents shall not be responsible for the accuracy or completeness of electronic copies of this plan sheet."

REGISTERED PROFESSIONAL ENGINEER — ALEBACHEW BEKELE — No. E15331 — Exp. 6/30/00 — ELECTRICAL — STATE OF CALIFORNIA

CONDUIT AND CONDUCTOR SCHEDULE (THIS SHEET ONLY)

CONDUCTOR TYPE	FUNCTION	RUN							
		7			14	11	20	40	41
6P22 CABLE	DATA/PHONE				1				
50P22 CABLE	DATA/PHONE	1							
36SMFO CABLE	VIDEO/DATA			1					
12SMFO CABLE	VIDEO/DATA		1						
DLC	DETECTOR LEAD-IN CABLE					6	12	9	15
	INNERDUCT		1 1/4"	1 1/4"					
	CONDUIT SIZE		4"		2"	3"	3"	3"	3"

CONSTRUCTION NOTES (THIS SHEET ONLY)

45 TERMINATE 12 DLC IN EXISTING CABINET & INSTALL 1 STATE-FURN SHED LOOP DETECTOR SENSOR UNITS.

49 REMOVE AND DISPOSE OF PULL BOX/HANDHOLE. FILL OPENING WITH PCC AND AC TO MATCH EXISTING (0.5' MIN AC).

55 ADD 15 DLC, REMOVE 14 DLC IN EXISTING CONDUIT.

59 SHOWN FOR REFERENCE ONLY. FOR INSTALLATION REFER TO SHEET E-25.

67 REUSE AND RE-TAG EXISTING DLC. RECONFIGURE LOOP DETECTOR CABLES IN CABINET TO PROVIDE REVISED DETECTOR LOOP OPERATION.

74 TERMINATE 15 DLC IN EXISTING CABINET & INSTALL 1 STATE-FURN SHED LOOP DETECTOR SENSOR UNIT.

75 ADD 12 DLC, REMOVE 11 DLC IN EXISTING CONDUIT.

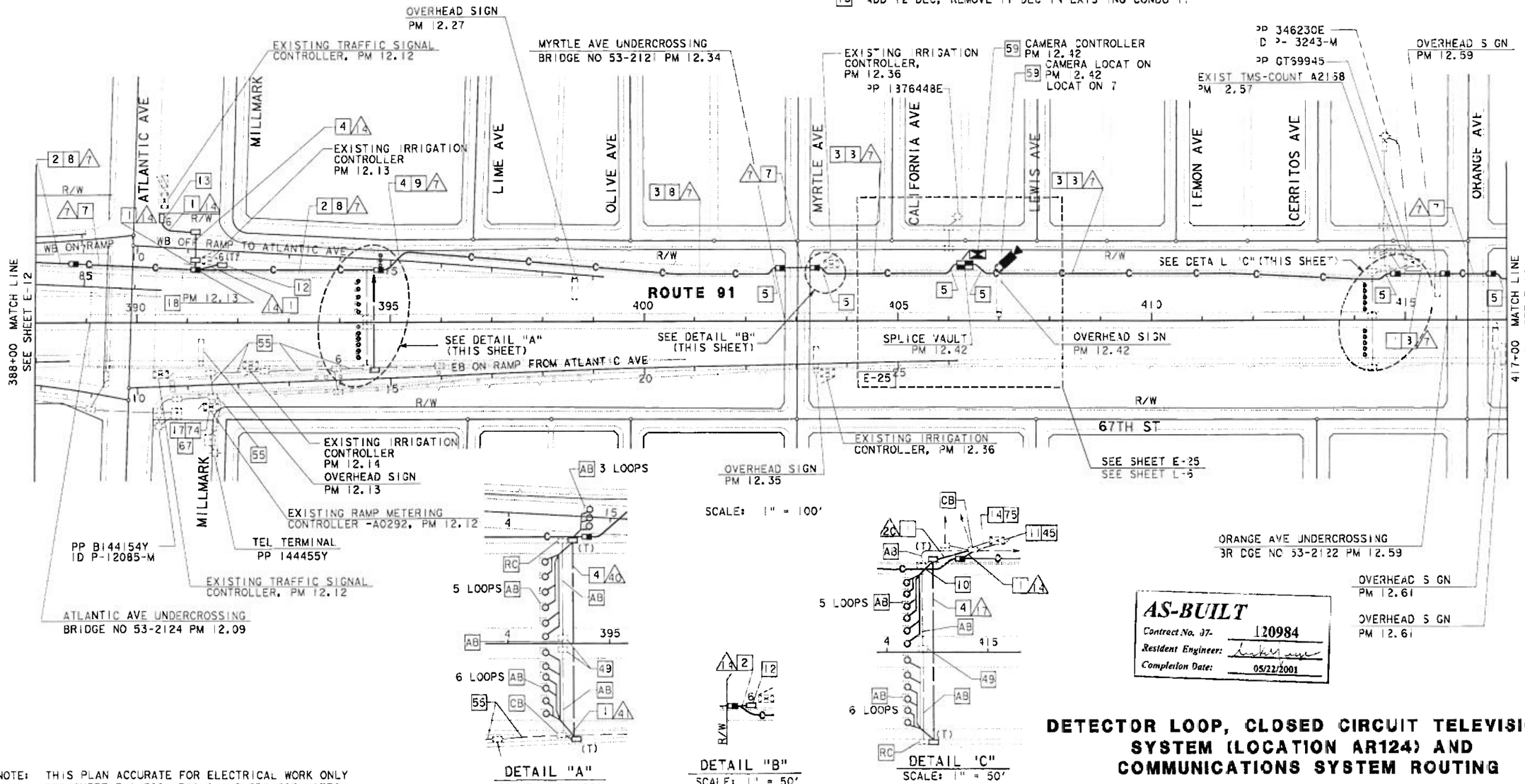

DETAIL "A"
SCALE: 1" = 50'

DETAIL "B"
SCALE: 1" = 50'

DETAIL "C"
SCALE: 1" = 50'

AS-BUILT
Contract No. 07- 120984
Resident Engineer:
Completion Date: 05/22/2001

DETECTOR LOOP, CLOSED CIRCUIT TELEVISION SYSTEM (LOCATION AR124) AND COMMUNICATIONS SYSTEM ROUTING

SCALE AS SHOWN

E-13

NOTE: THIS PLAN ACCURATE FOR ELECTRICAL WORK ONLY
SEE SHEET E-1 FOR LEGEND AND PROJECT NOTES
SEE SHEET U-13 FOR EXISTING UTILITIES

DATE	REVISED BY	DATE REVISED
HHT	06/97	06/97
NT		

CALCULATED/DESIGNED BY
CHECKED BY

PROJECT ENG' 'R
PAT SULLIVAN

STATE OF CALIFORNIA - DEPARTMENT OF TRANSPORTATION
Caltrans

LAST REVISION 08 25 97

FORM DC-OE-92-PF (REV. 3/88)

FOR REDUCED PLANS ORIGINAL SCALE IS IN INCHES 0 1 2 3

CU 07396 EA 20981

DIST	COUNTY	ROUTE	POST MILES TOTAL PROJECT	SHEET NO.	TOTAL SHEETS
07	LA	91	3.5/14.3	69	127

Alebachew Bekele
REGISTERED ELECTRICAL ENGINEER

6-15-98
PLANS APPROVAL DATE

ALEBACHEW BEKELE No. E 5331 6/30/01 ELECTRICAL — REGISTERED PROFESSIONAL ENGINEER — STATE OF CALIFORNIA

The State of California or its officers or agents shall not be responsible for the accuracy or completeness of electronic copies of this plan sheet.

CONDUIT AND CONDUCTOR SCHEDULE (THIS SHEET ONLY)

CONDUCTOR TYPE	FUNCTION	RUN 7	14	21	22
2 CABLE	DATA/PHONE		1		1
50P22 CABLE	DATA/PHONE	1			
36SMFO CABLE	VIDEO/DATA		1		
12SMFO CABLE	VIDEO/DATA	1			
DLC	DETECTOR LEAD-IN CABLE			5	11
	INNERDUCT	1 1/4"	1 1/4"		
	CONDUIT SIZE	4"	2"	3"	3"

CONSTRUCTION NOTES (THIS SHEET ONLY)

28 ADD 1-6P22 CABLE & 11 DLC, REMOVE 6 DLC IN EXISTING CONDUIT.

40 TERMINATE 1 DLC IN EXISTING CABINET & INSTALL 5 STATE-FURNISHED LOOP DETECTOR SENSOR UNITS.

49 REMOVE AND DISPOSE OF PULL BOX/HANDHOLE. FILL OPENING WITH PCC AND AC TO MATCH EXISTING (0.1'MIN AC).

65 REUSE EXISTING DLC.

67 REUSE AND RE-TAG EXISTING DLC. RECONFIGURE LOOP DETECTOR CABLES IN CABINET TO PROVIDE REVISED DETECTOR LOOP OPERATION.

AS-BUILT
Contract No. 97- 120984
Resident Engineer: LUKE NGUYEN
Completion Date: 05/22/2001

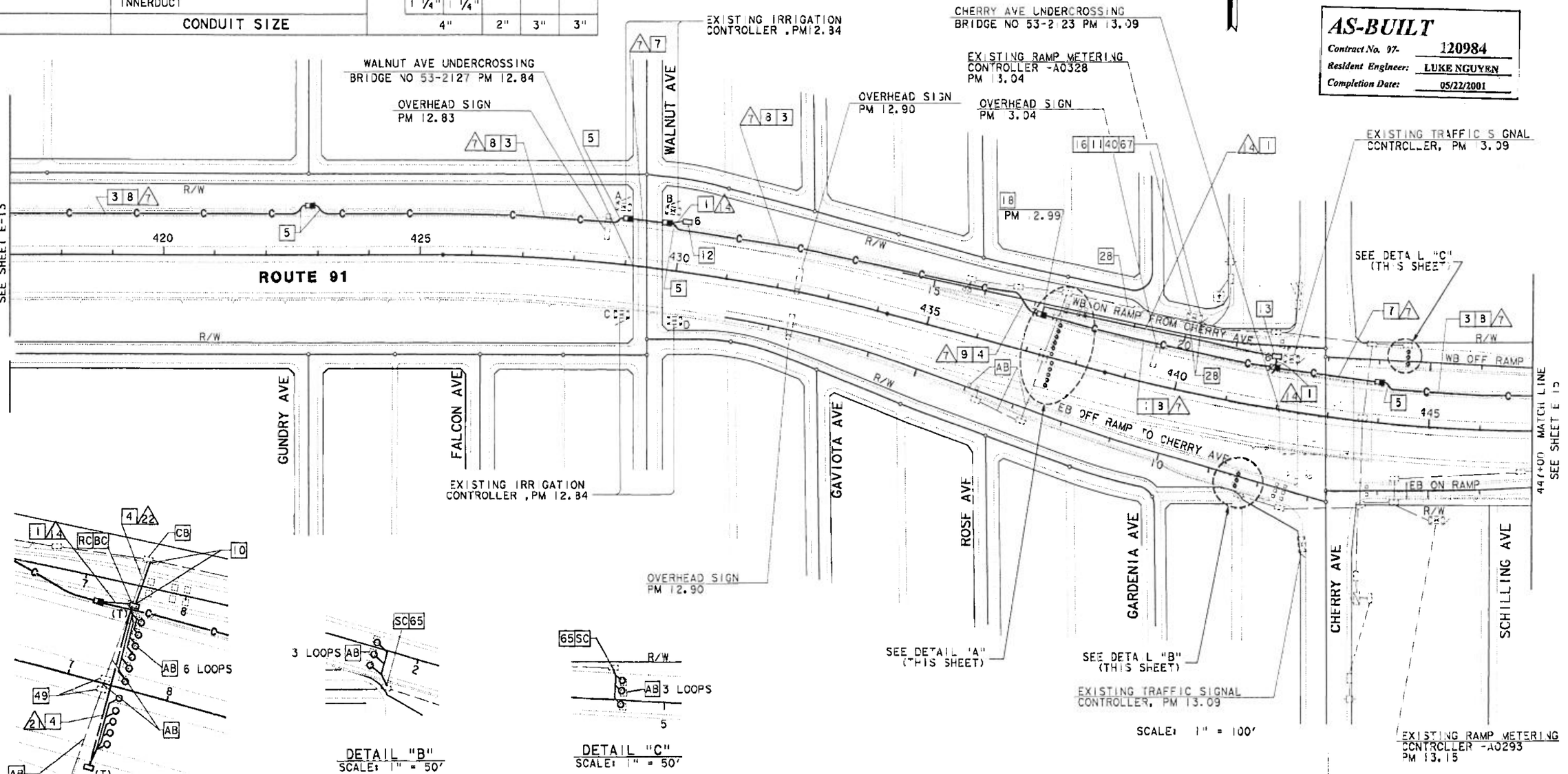

DETAIL "A"
SCALE: 1" = 50'

DETAIL "B"
SCALE: 1" = 50'

DETAIL "C"
SCALE: 1" = 50'

NOTE: THIS PLAN ACCURATE FOR ELECTRICAL WORK ONLY.
SEE SHEET E-1 FOR LEGEND AND PROJECT NOTES.
SEE SHEET U-14 FOR EXISTING UTILITIES.

DETECTOR LOOP AND COMMUNICATIONS SYSTEM ROUTING

SCALE AS SHOWN

E-14

LAST REVISION 08 12 97

CONDUIT AND CONDUCTOR SCHEDULE (THIS SHEET ONLY)

CONDUCTOR TYPE	FUNCTION	RUN					
		7	11	14	17	28	
CABLE	DATA/PHONE		2	1			
50P22 CABLE	DATA/PHONE	1					
36SMFO CABLE	VIDEO/DATA			1			
12SMFO CABLE	VIDEO/DATA		1				
DLC	DETECTOR LEAD-IN CABLE					6	5
#8	SERVICE		2				
	INNERDUCT	1 1/4"	1 1/4"				
	CONDUIT SIZE	4"	2"	2"	3"	2"	

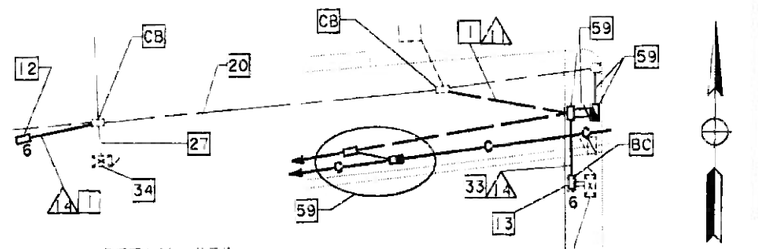

DETAIL "E"
SCALE: 1" = 20'

EXIST TRAFFIC SIGNAL CONTROLLER PM 3.89

DIST	COUNTY	ROUTE	POST MILES TOTAL PROJECT	SHEET NO.	TOTAL SHEETS
07	LA	91	5.5/14.6	70	27

Alebachew Bekele
REGISTERED ELECTRICAL ENGINEER

6-15-98
PLANS APPROVAL DATE

REGISTERED PROFESSIONAL ENGINEER — ALEBACHEW BEKELE — No. E13331 — Exp. 6/30/00 — ELECTRICAL — STATE OF CALIFORNIA

The State of California or its officers or agents shall not be responsible for the accuracy or completeness of electronic copies of this plan sheet.

AS-BUILT
Contract No. 07- 120984
Resident Engineer: LUKE NGUYEN
Completion Date: 05/22/2001

SPLICE VAULT AR134, PM 13.38
EXISTING IRRIGATION CONTROLLER AR133A PM 13.35
OVERHEAD SIGN PM 13.20
N LONG BEACH OH BRIDGE NO 53-2101 PM 13.35
OVERHEAD SIGN PM 13.26
OVERHEAD SIGN PM 13.28
UNION PACIFIC RR
PP 1876442E
ID P-12088-M
EXISTING TRAFFIC SIGNAL CONTROLLER AR136A, PM 13.39
EXISTING RMS-A0327 AR136A, PM 13.57
SEE DETAIL "E" (THIS SHEET)
SEE DETAIL "F" (THIS SHEET)
SEE DETAIL "G" (THIS SHEET)

CONSTRUCTION NOTES (THIS SHEET ONLY)

20 ADD 2-6P22 CABLE ~~& 2#8 WIRES~~ IN EXISTING CONDUIT.
27 ADD 1-6P22 CABLE ~~& 2#8 WIRES~~ IN EXISTING CONDUIT.
29 COIL 10' OF 6P22 CABLE IN CENSUS STATION CABINET FOR FUTURE CONNECTION.
33 INSTALL 2"GRS CONDUIT UNDER CONCRETE SIDEWALK.

EXISTING IRRIGATION CONTROLLER AR136 PM 13.55
OVERHEAD SIGN PM 13.54
EAST 67TH WY
SEE DETAIL "B" (THIS SHEET)
OFF RAMP TO PARAMOUNT BLVD
WB
MATCH LINE SEE SHEET E-16
475+00
ROUTE 91
WB ON RAMP FROM PARAMOUNT BLVD
R/W
WB OFF RAMP TO CHERRY AVE
447+00 MATCH LINE SEE SHEET E-14
450
455
460
465
470
SEE DETAIL "C" (THIS SHEET)
AR136 PM 13.59
EB OFF RAMP TO PARAMOUNT BLVD
EB ON RAMP FROM CHERRY AVE
EB ON RAMP FROM PARAMOUNT BLVD
CURTIS
59 CAMERA CONTROLLER PM 13.38
OVERHEAD SIGN PM 13.42
EXISTING-COUNT STATION 126 PM 13.38
59 CAMERA LOCATION, PM 13.38
SEE DETAIL "D" (THIS SHEET)
PARAMOUNT BLVD UNDERCROSSING BRIDGE NO 53-2129 PM 13.59
OVERHEAD SIGN PM 13.67
EXISTING RAMP METERING CONTROLLER-A0294, PM 3.64
MINNESOTA
SARNIA AVE
SEE DETAIL "A" (THIS SHEET)
EXISTING IRRIGATION CONTROLLER, PM 13.35
PP 1876447E
SEE SHEET E-26
SEE SHEET L-7
E-26
EXISTING IRRIGATION CONTROLLER, PM 13.59
EXISTING TRAFFIC SIGNAL CONTROLLER, PM 13.59
PARAMOUNT BLVD
ID P-12089-M

SCALE: 1" = 100'

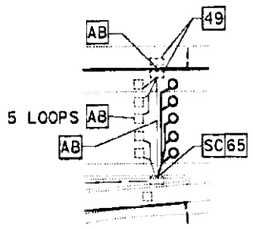

DETAIL "A"
SCALE: 1" = 50'

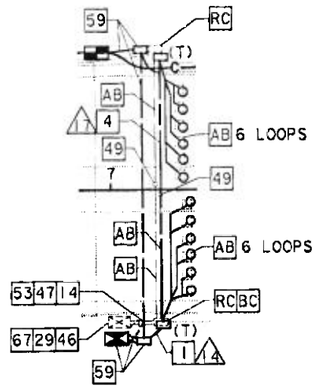

DETAIL "B"
SCALE: 1" = 50'

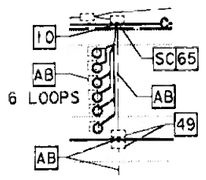

DETAIL "C"
SCALE: 1" = 50'

CONSTRUCTION NOTES (CONTINUE)

34 TERMINATE 1-6P22 CABLE & 2#8 WIRE, INSTALL MODEL 170 CONTROLLER INTERFACE IN EXISTING CABINET. SEE SHEET E-44.
46 TERMINATE 12 DLC IN EXISTING CABINET.
47 ADD 12 DLC IN EXISTING CONDUIT.
49 REMOVE AND DISPOSE OF PULL BOX/HANDHOLE. FILL OPENING WITH PCC AND AC TO MATCH EXISTING (0.1'M N AC).
53 REMOVE 12 DLC FROM EXISTING CONDUIT.
59 SHOWN FOR REFERENCE ONLY. FOR INSTALLATION REFER TO SHEET E-26.
61 TERMINATE 5 DLC IN CABINET. INSTALL 1 STATE-FURNISHED LOOP DETECTOR SENSOR UNIT.
62 ADD 5 DLC IN EXISTING CONDUIT.
65 REUSE EXISTING DLC.
67 REUSE AND RE-TAG EXISTING DLC. RECONFIGURE LOOP DETECTOR CABLES IN CABINET TO PROVIDE REVISED DETECTOR LOOP OPERATION.
76 REMOVE 4 DLC FROM EXISTING CONDUIT.

NOTE: THIS PLAN ACCURATE FOR ELECTRICAL WORK ONLY.
SEE SHEET E-1 FOR LEGEND AND PROJECT NOTES.
SEE SHEET U-15 FOR EXISTING UTILITIES.

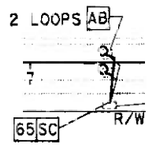

DETAIL "D"
SCALE: 1" = 50'

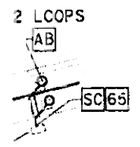

DETAIL "F"
SCALE: 1" = 50'

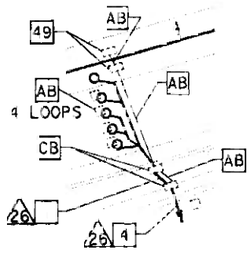

DETAIL "G"
SCALE: 1" = 50'

DETECTOR LOOP, CLOSED CIRCUIT TELEVISION CAMERA (LOCATION AR134) AND COMMUNICATIONS SYSTEM ROUTING

SCALE AS SHOWN

E-15

LAST REVISION 08 12 97

FOR REDUCED PLANS ORIGINAL SCALE IS IN INCHES 0 1 2 3

CU 07396 EA 120981

E-92-PF (REV. 3/88)

DIST	COUNTY	ROUTE	POST MILES TOTAL PROJECT	SHEET NO.	TOTAL SHEETS
07	LA	91	8.5/14.6	7	27

Alebachew Bekele
REGISTERED ELECTRICAL ENGINEER

6-15-98
PLANS APPROVAL DATE

ALEBACHEW BEKELE No. E15331 Exp. 6/30/0 ELECTRICAL — REGISTERED PROFESSIONAL ENGINEER — STATE OF CALIFORNIA

The State of California or its officers or agents shall not be responsible for the accuracy or completeness of electronic copies of this plan sheet.

AS-BUILT
Contract No. 07- 120984
Resident Engineer: LUKE NGUYEN
Completion Date: 05/22/2001

CONDUIT AND CONDUCTOR SCHEDULE (THIS SHEET ONLY)

CONDUCTOR TYPE	FUNCTION	RUN 7	RUN 14
6P22 CABLE	DATA/PHONE		1
50P22 CABLE	DATA/PHONE	1	
36SMFO CABLE	VIDEO/DATA	1	
12SMFO CABLE	VIDEO/DATA	1	
	INNERDUCT	1 1/4" 1 1/4"	
	CONDUIT SIZE	4"	2"

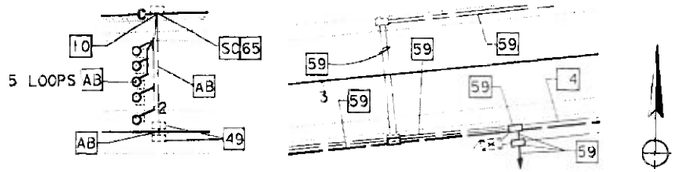

DETAIL "A"
SCALE: 1" = 50'

DETAIL "B"
SCALE: 1" = 50'

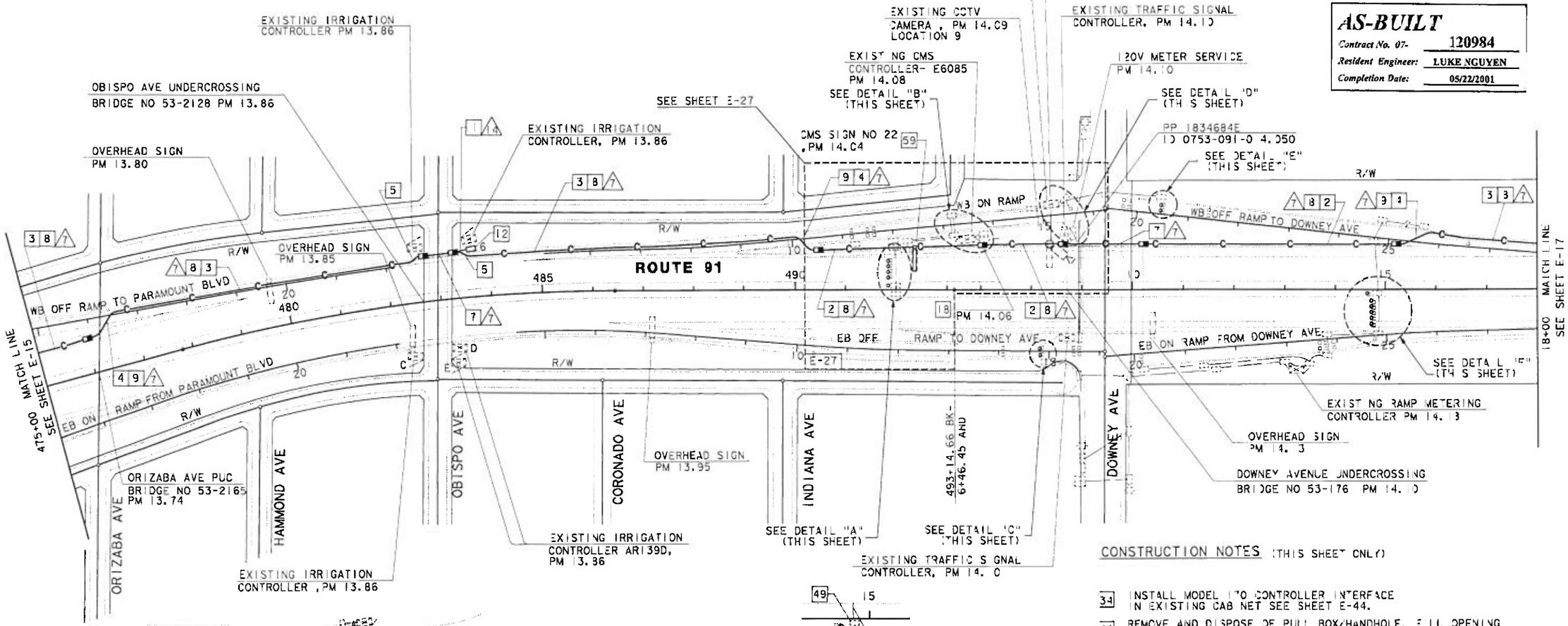

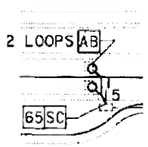

DETAIL "C"
SCALE: 1" = 50'

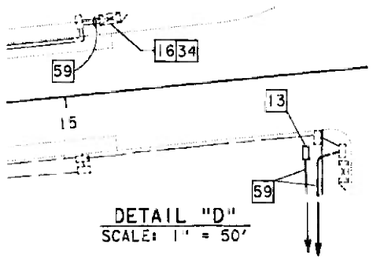

DETAIL "D"
SCALE: 1" = 50'

DETAIL "E"
SCALE: 1" = 50'

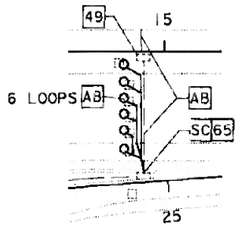

DETAIL "F"
SCALE: 1" = 50'

NOTE: THIS PLAN ACCURATE FOR ELECTRICAL WORK ONLY.
SEE SHEET E-1 FOR LEGEND AND PROJECT NOTES.
SEE SHEET U-16 FOR EXISTING UTILITIES.

CONSTRUCTION NOTES (THIS SHEET ONLY)

34 INSTALL MODEL 170 CONTROLLER INTERFACE IN EXISTING CAB NET SEE SHEET E-44.

49 REMOVE AND DISPOSE OF PULL BOX/HANDHOLE. FILL OPENING WITH PCC AND AC TO MATCH EXISTING (0.5' MIN AC).

59 SHOWN FOR REFERENCE ONLY. FOR INSTALLATION REFER TO SHEET E-27.

65 REUSE EXISTING DLC.

DETECTOR LOOP, MODIFY CLOSED CIRCUIT TELEVISION CAMERA (LOCATION AR141), CHANGEABLE MESSAGE SIGN SYSTEM (NO. 22) AND COMMUNICATIONS SYSTEM ROUTING

SCALE: 1"=100'

E-16

LAST REVISION 08 12-97

DATE	REVISED BY	DATE	REVISED
06/97	HHT	06/97	NT

CALCULATED/DESIGNED BY
CHECKED BY

PROJECT ENG' PAT SULLIVAN

STATE OF CALIFORNIA - DEPARTMENT OF TRANSPORTATION
Caltrans

FORM DC-OE-92-PF (REV. 3/88)

FOR REDUCED PLANS ORIGINAL SCALE IS IN INCHES 0 1 2 3

CU 07396 EA 120981

DIST	COUNTY	ROUTE	POST MILES TOTAL PROJECT	SHEET NO.	TOTAL SHEETS
07	LA	91	6.3/14.6	72	127

Alebachew Bekele
REGISTERED ELECTRICAL ENGINEER

6-15-98
PLANS APPROVAL DATE

The State of California or its officers or agents shall not be responsible for the accuracy or completeness of electronic copies of this plan sheet.

REGISTERED PROFESSIONAL ENGINEER — ALEBACHEW BEKELE — No. E15331 — Exp. 6/30/01 — ELECTRICAL — STATE OF CALIFORNIA

CONDUIT AND CONDUCTOR SCHEDULE (THIS SHEET ONLY)

CONDUCTOR TYPE	FUNCTION	RUN 3	RUN 7	RUN 14	RUN 23
6P22 CABLE	DATA/PHONE			1	2
50P22 CABLE	DATA/PHONE		1		
36SMFO CABLE	CCTV/DATA		1		
12SMFO CABLE	VIDEO/DATA		1		
#8	SERVICE (CABLE NODE)				2
	INNERDUCT		1 1/4" 1 1/4"		
	CONDUIT SIZE	4"	4"	2"	2"

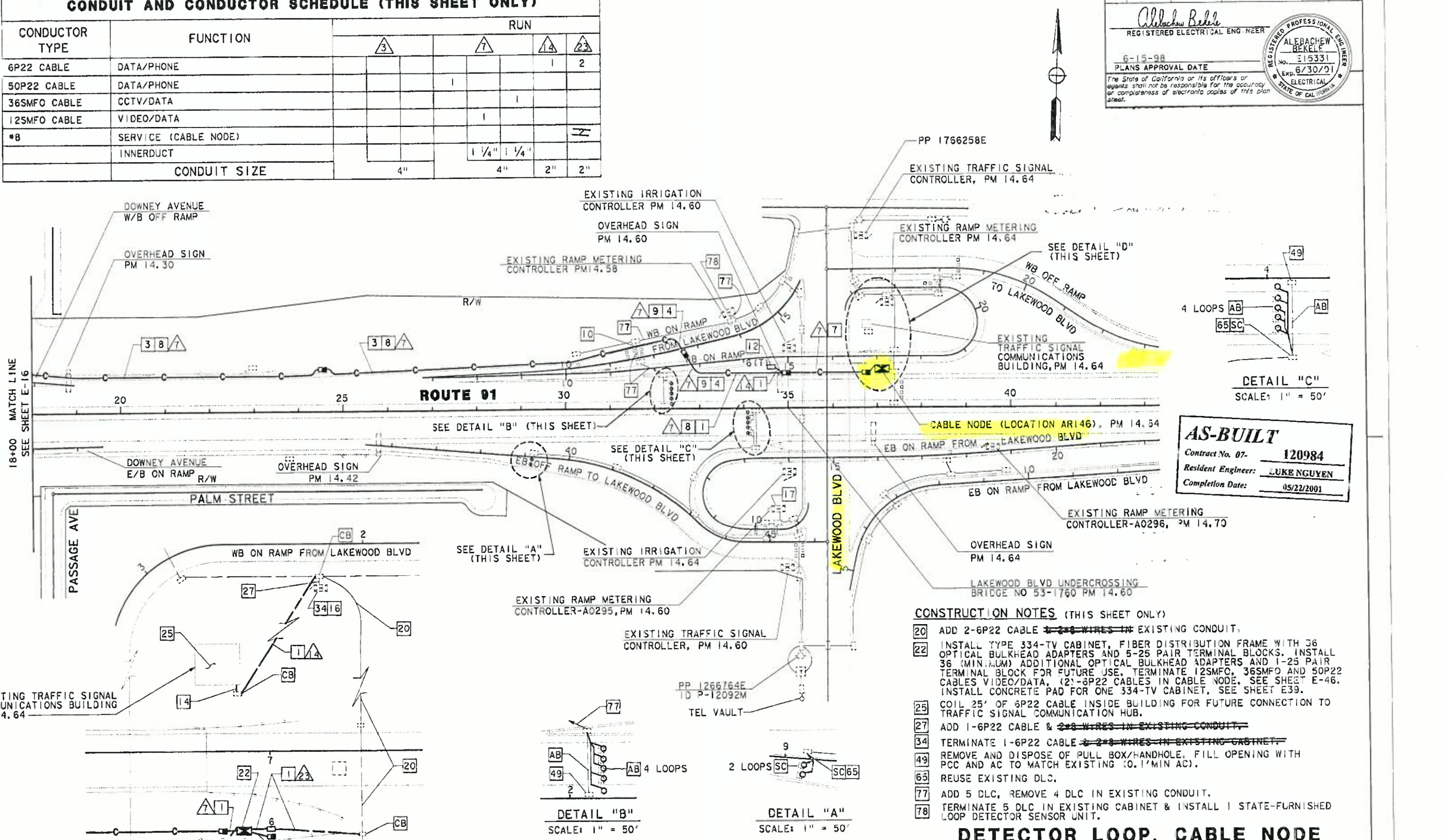

DETAIL "C"
SCALE: 1" = 50'

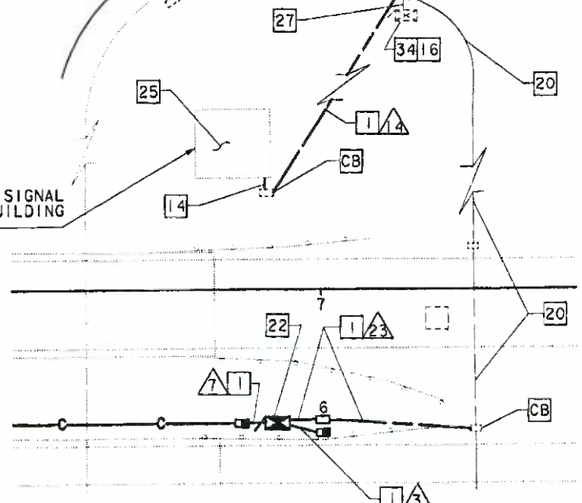

DETAIL "D"
SCALE: 1" = 20'

DETAIL "B"
SCALE: 1" = 50'

DETAIL "A"
SCALE: 1" = 50'

NOTE: THIS PLAN ACCURATE FOR ELECTRICAL WORK ONLY.
SEE SHEET E-1 FOR LEGEND AND PROJECT NOTES.
SEE SHEET U-17 FOR EXISTING UTILITIES.

AS-BUILT
Contract No. 07- 120984
Resident Engineer: LUKE NGUYEN
Completion Date: 05/22/2001

CONSTRUCTION NOTES (THIS SHEET ONLY)

20 ADD 2-6P22 CABLE ~~& 2#8 WIRES IN~~ EXISTING CONDUIT.

22 INSTALL TYPE 334-TV CABINET, FIBER DISTRIBUTION FRAME WITH 36 OPTICAL BULKHEAD ADAPTERS AND 5-25 PAIR TERMINAL BLOCKS. INSTALL 36 (MINIMUM) ADDITIONAL OPTICAL BULKHEAD ADAPTERS AND 1-25 PAIR TERMINAL BLOCK FOR FUTURE USE. TERMINATE 12SMFO, 36SMFO AND 50P22 CABLES VIDEO/DATA, (2)-6P22 CABLES IN CABLE NODE. SEE SHEET E-46. INSTALL CONCRETE PAD FOR ONE 334-TV CABINET. SEE SHEET E39.

25 COIL 25' OF 6P22 CABLE INSIDE BUILDING FOR FUTURE CONNECTION TO TRAFFIC SIGNAL COMMUNICATION HUB.

27 ADD 1-6P22 CABLE & ~~2#8 WIRES IN EXISTING CONDUIT.~~

34 TERMINATE 1-6P22 CABLE ~~& 2#8 WIRES IN EXISTING CABINET.~~

49 REMOVE AND DISPOSE OF PULL BOX/HANDHOLE. FILL OPENING WITH PCC AND AC TO MATCH EXISTING (0.1'MIN AC).

65 REUSE EXISTING DLC.

77 ADD 5 DLC, REMOVE 4 DLC IN EXISTING CONDUIT.

78 TERMINATE 5 DLC IN EXISTING CABINET & INSTALL 1 STATE-FURNISHED LOOP DETECTOR SENSOR UNIT.

DETECTOR LOOP, CABLE NODE (LOCATION AR146) AND COMMUNICATIONS SYSTEM ROUTING

SCALE: 1"=100'

E-17

LAST REVISION 08-12-97

FOR REDUCED PLANS ORIGINAL SCALE IS IN INCHES 0 1 2 3

CU 07396 | EA 12098!

DE-92-PF (REV. 3/88)
FILE: f:\projects\120981_ua\ab\712098u17.dgn DATE: Mon Aug 27 2001 TIME: 09:36

DIST	COUNTY	ROUTE	POST MILES TOTAL PROJECT	SHEET NO.	TOTAL SHEETS
07	LA	91	14.6/20.7	44	07

Alebachew Bekele
REGISTERED ELECTRICAL ENGINEER

6- -98
PLANS APPROVAL DATE

The State of California or its officers or agents shall not be responsible for the accuracy or completeness of electronic copies of this xion sheet.

REGISTERED PROFESSIONAL ENGINEER — ALEBACHEW BEKELE — No. E 533 — Exp 6/30/01 — ELECTRICAL — STATE OF CALIFORNIA

AS-BUILT
Contract No. 07- 120994
Resident Engineer: NGUYEN, L.
Completion Date: 09/15/2000

CONDUIT AND CONDUCTOR SCHEDULE (THIS SHEET ONLY)

CONDUCTOR TYPE	FUNCTION	RUN 2	RUN 44
50P22 CABLE	DATA/PHONE	1	
36SMFO	VIDEO/DATA	1	
12SMFO	VIDEO/DATA	1	
DLC	DETECTOR LEAD-IN CABLE	1	1
	INNERDUCT	1 1/4"	1 1/4"
	CONDUIT SIZE	4"	2"

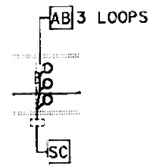

DETAIL "A"
SCALE: 1" = 50'

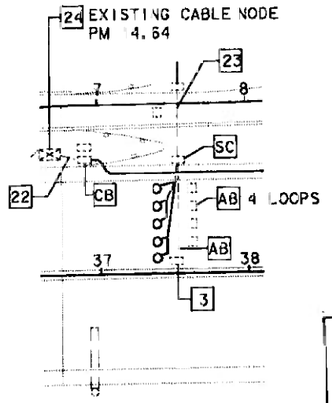

DETAIL "B"
SCALE: 1" = 50'

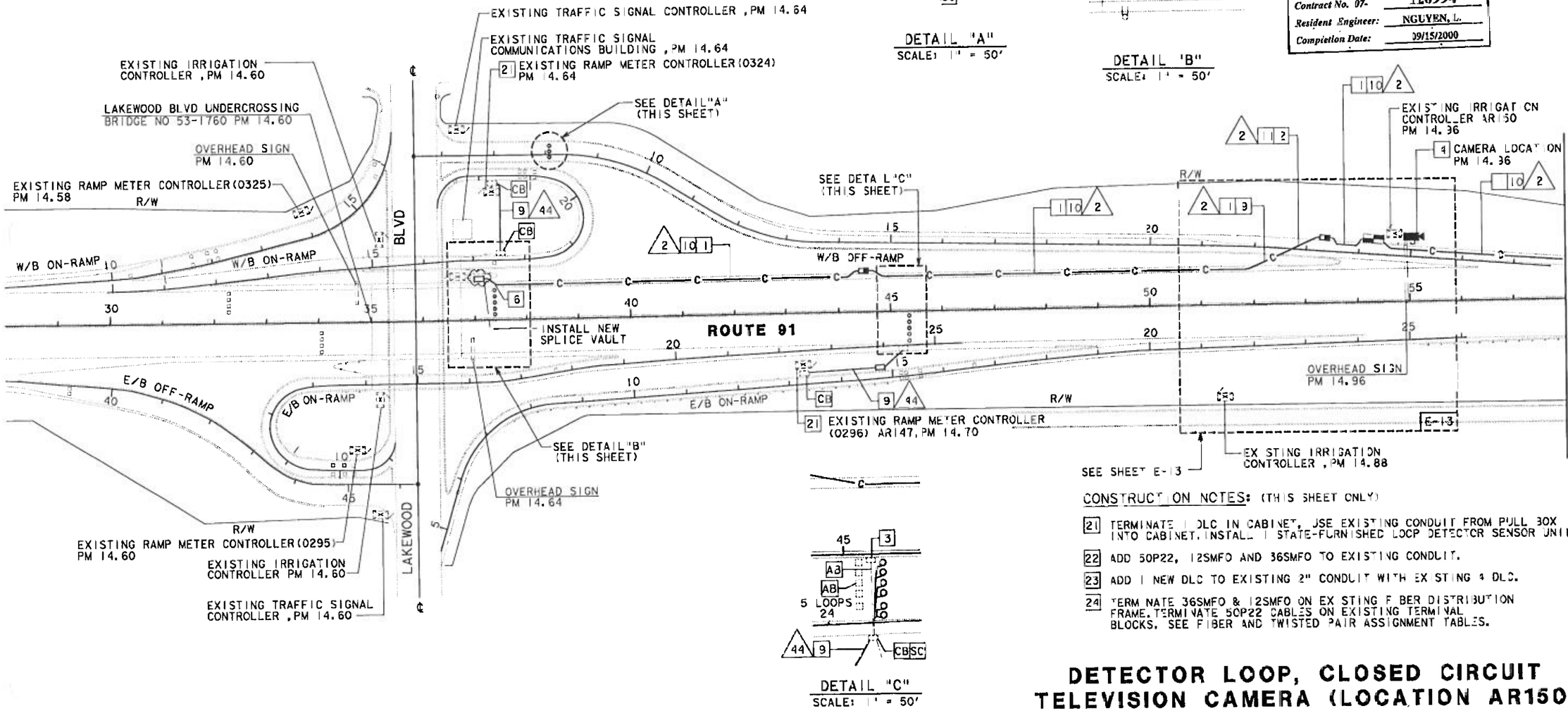

DETAIL "C"
SCALE: 1" = 50'

CONSTRUCTION NOTES: (THIS SHEET ONLY)

21 TERMINATE 1 DLC IN CABINET, USE EXISTING CONDUIT FROM PULL BOX INTO CABINET. INSTALL 1 STATE-FURNISHED LOOP DETECTOR SENSOR UNIT.

22 ADD 50P22, 12SMFO AND 36SMFO TO EXISTING CONDUIT.

23 ADD 1 NEW DLC TO EXISTING 2" CONDUIT WITH EXISTING 4 DLC.

24 TERMINATE 36SMFO & 12SMFO ON EXISTING FIBER DISTRIBUTION FRAME. TERMINATE 50P22 CABLES ON EXISTING TERMINAL BLOCKS. SEE FIBER AND TWISTED PAIR ASSIGNMENT TABLES.

DETECTOR LOOP, CLOSED CIRCUIT TELEVISION CAMERA (LOCATION AR150) AND COMMUNICATION SYSTEM ROUTING

SCALE: 1" = 50'

E-2

NOTE: THIS PLAN ACCURATE FOR ELECTRICAL WORK ONLY. SEE SHEET E-1 FOR LEGEND AND NOTES.

DATE PLOTTED => 23-Jun-2001
TIME PLOTTED => 09:13
LAST REVISION 08-04-97

FOR REDUCED PLANS ORIGINAL SCALE IS IN INCHES 0 2 3

USERNAME => GCRUZ
DGN FILE => T12099u0223091325

CU 07396 EA 12099

D ST	COUNTY	ROUTE	POST MILES TOTAL PROJECT	SHEET NO.	TOTAL SHEETS
07	LA	91	14.6/20.7	45	107

Alebachew Bekele
REGISTERED ELECTRICAL ENGINEER

REGISTERED PROFESSIONAL ENGINEER
ALEBACHEW BEKELE
No. E 5331
Exp. 6/30/01
ELECTRICAL
STATE OF CALIFORNIA

5-1-98
PLANS APPROVAL DATE

The State of California or its officers or agents shall not be responsible for the accuracy or completeness of electronic copies of this plan sheet.

CONDUIT AND CONDUCTOR SCHEDULE (THIS SHEET ONLY)

CONDUCTOR TYPE	FUNCTION	RUN 2	21	22	25	27	28	32	33	35	36
50P22 CABLE	DATA/PHONE	1									
36SMFO	VIDEO/DATA	1									
12SMFO	VIDEO/DATA	1									
6P22 CABLE	DATA/PHONE		1	2				2		2	2
DLC	DETECTOR LEAD-IN CABLE				2	5	6	6	5	7	13
	INNERDUCT	1¼" 1¼"									
	CONDUIT SIZE	4"	2"	2"	2"	3"	3"	3"	2"	3"	3"

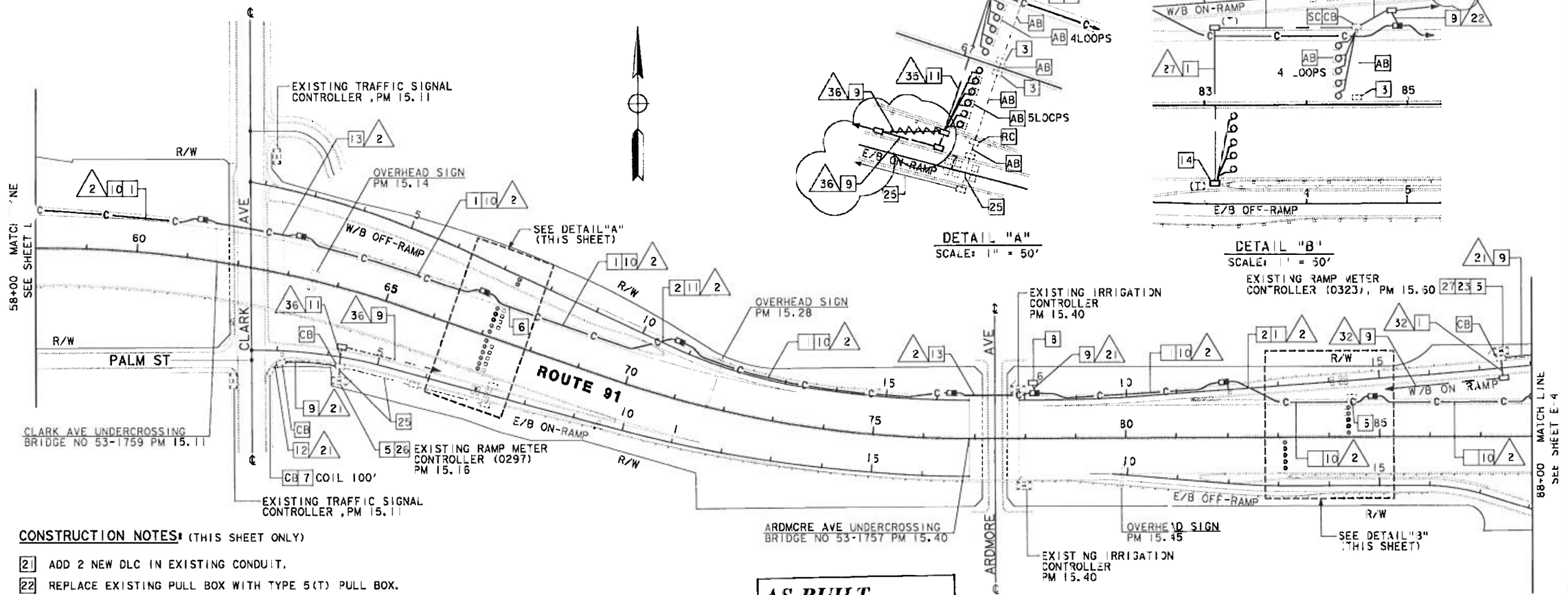

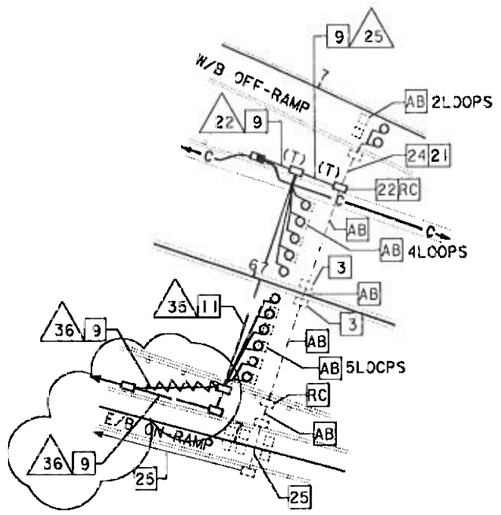

DETAIL "A"
SCALE: 1" = 50'

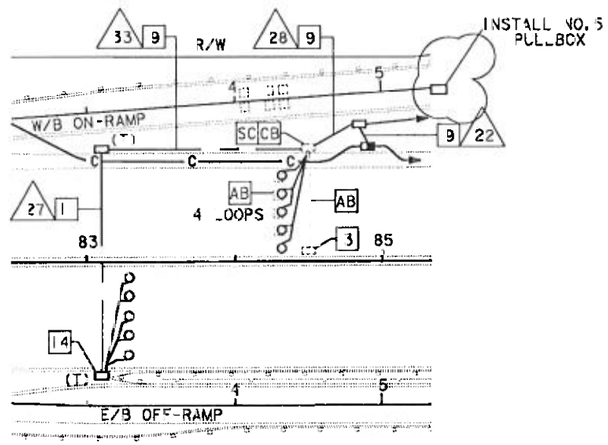

DETAIL "B"
SCALE: 1" = 50'

CONSTRUCTION NOTES: (THIS SHEET ONLY)

21 ADD 2 NEW DLC IN EXISTING CONDUIT.

22 REPLACE EXISTING PULL BOX WITH TYPE 5(T) PULL BOX.

23 TERMINATE 6 NEW DLC IN CABINET. USE EXISTING CONDUIT FROM PULL BOX INTO CABINET. INSTALL 3 STATE-FURNISHED LOOP DETECTOR SENSOR UNIT.

24 REMOVE 2 EXISTING DLC FROM EXISTING CONDUIT.

REMOVE 11 EXISTING MAINLINE DLC FROM EXISTING CONDUIT.

26 TERMINATE 13 NEW DLC IN CABINET. USE EXISTING CONDUIT FROM PULL BOX INTO CABINET. INSTALL 1 STATE-FURNISHED LOOP DETECTOR SENSOR UNIT.

27 INSTALL ADDITIONAL 5-2WAY 4-WIRE BRIDGE FOR RECONFIGURATION OF INTERCONNECT RMS BRIDGES.

AS-BUILT
Contract No. 07- 120994
Resident Engineer: NGUYEN, L.
Completion Date: 09/15/2000

NOTE: THIS PLAN ACCURATE FOR ELECTRICAL WORK ONLY. SEE SHEET E-1 FOR LEGEND AND NOTES.

DETECTOR LOOP AND COMMUNICATION SYSTEM ROUTING

SCALE: 1" = 100'

E-3

LAST REVISION 08 04 97 | DATE PLOTTED => 23-Jan-2001 | TIME PLOTTED => 09:14

2-PF (REV. 3/88)

FOR REDUCED PLANS ORIGINAL SCALE IS IN INCHES 0 1 2 3

USERNAME => Scruz
DGN FILE => 712099L0323091356

CU 07396 EA 20991

DIST	COUNTY	ROUTE	POST MILES TOTAL PROJECT	SHEET NO.	TOTAL SHEETS
07	LA	91	14.6/20.7	46	107

Aleboche Bekele
REGISTERED ELECTRICAL ENGINEER

6-1-98
PLANS APPROVAL DATE

REGISTERED PROFESSIONAL ENGINEER — ALEBACHEW BEKELE — No. E 3331 — EXP. 6/30/00 — ELECTRICAL — STATE OF CALIFORNIA

"The State of California or its officers or agents shall not be responsible for the accuracy or completeness of electronic copies of this plan sheet."

CONDUIT AND CONDUCTOR SCHEDULE (THIS SHEET ONLY)								
CONDUCTOR TYPE	FUNCTION	RUN						
		2			2	21	27	28	33
50P22 CABLE	DATA/PHONE	1			2				
36SMFO CABLE	VIDEO/DATA		1						
12SMFO CABLE	VIDEO/DATA			1					
2SMFO B/O CABLE	VIDEO/DATA				2				
2SMFO B/O CABLE	VIDEO D STR BUTION				1				
6P22 CABLE	DATA/PHONE					1			
DLC	DETECTOR LEAD-IN CABLE						5	5	5
	INNERDUCT		1¼"	1¼"					
	CONDUIT SIZE		4"		4"	2"	3"	3"	2"

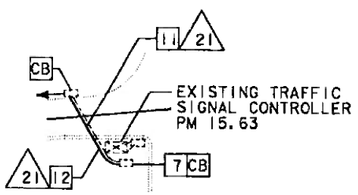

DETAIL "A"
SCALE: 1" = 50'

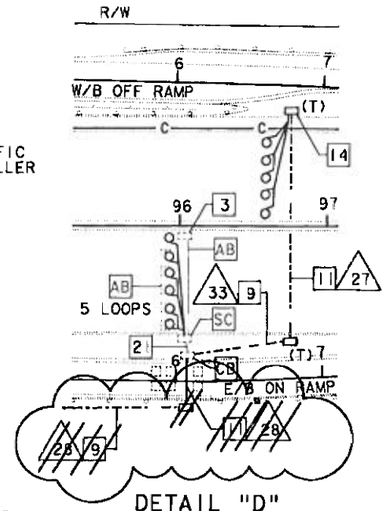

DETAIL "D"
SCALE: 1" = 50'

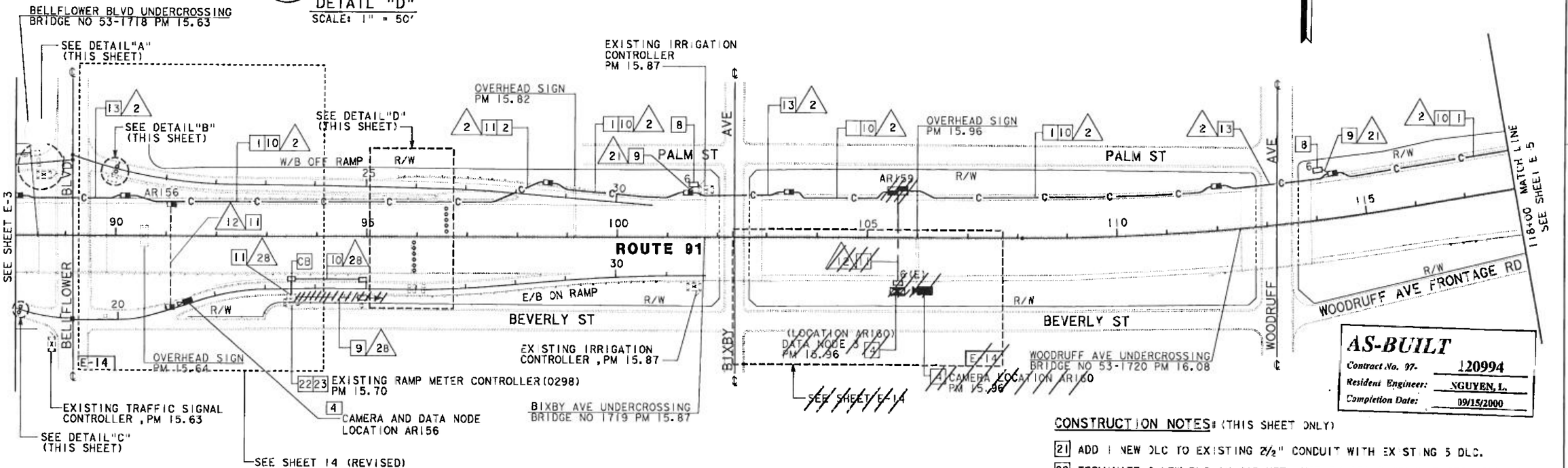

AS-BUILT
Contract No. 97- 120994
Resident Engineer: NGUYEN, L.
Completion Date: 09/15/2000

CONSTRUCTION NOTES: (THIS SHEET ONLY)

21 ADD 1 NEW DLC TO EXISTING 2½" CONDUIT WITH EXISTING 5 DLC.

22 TERMINATE 3 NEW DLC IN CAB NET. USE EXISTING CONDUIT FROM PULL BOX INTO CABINET. INSTALL 3 STATE-FURNISHED LOOP DETECTOR SENSOR UNITS.

23 RECONFIGURE INPUT/OUTPUT CABLES AT EXISTING 5-WAY, 4 WIRE BRIDGE. SEE SHEET E-36 FOR DETAILS.

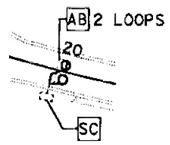

DETAIL "B"
SCALE: 1" = 50'

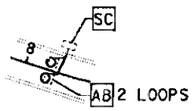

DETAIL "C"
SCALE: 1" = 50'

DETECTOR LOOP, DATA NODE 3 (LOCATION ~~AR160~~ AR150), CLOSED CIRCUIT TELEVISION CAMERA (LOCATION ~~AR160~~ AR150) AND COMMUNICATION SYSTEM ROUTING AR156

NOTE: THIS PLAN ACCURATE FOR ELECTRICAL WORK ONLY. SEE SHEET E-1 FOR LEGEND AND NOTES.

SCALE: 1" = 00'

E-4

LAST REVISION DATE PLOTTED => 23-Jun-2000 TIME PLOTTED => 08:52

08 04 97

-PF (REV. 3/88) FOR REDUCED PLANS ORIGINAL SCALE IS IN INCHES 0 1 2 3 USERNAME => GCruz DI 07396 EA 120994

DIST	COUNTY	ROUTE	POST MILES TOTAL PROJECT	SHEET NO.	TOTAL SHEETS
07	LA	91	14.5/20.7	47	107

Alebachew Bekele
REGISTERED ELECTRICAL ENGINEER

5-1-98
PLANS APPROVAL DATE

REGISTERED PROFESSIONAL ENGINEER ALEBACHEW BEKELE No. E15331 Exp. 6/30/01 ELECTRICAL STATE OF CALIFORNIA

The State of California or its officers or agents shall not be responsible for the accuracy or completeness of electronic copies of this plan sheet.

CONDUCTOR TYPE	FUNCTION	RUN 2			21	38	39
50P22 CABLE	DATA/PHONE	1					
36SMFO	VIDEO/DATA		1				
12SMFO	VIDEO/DATA			1			
6P22 CABLE	DATA/PHONE				1		
DLC	DETECTOR LEAD-IN CABLE					7	13
	INNERDUCT		1/4"	1 1/4"			
	CONDUIT SIZE		4"		2"	3"	3"

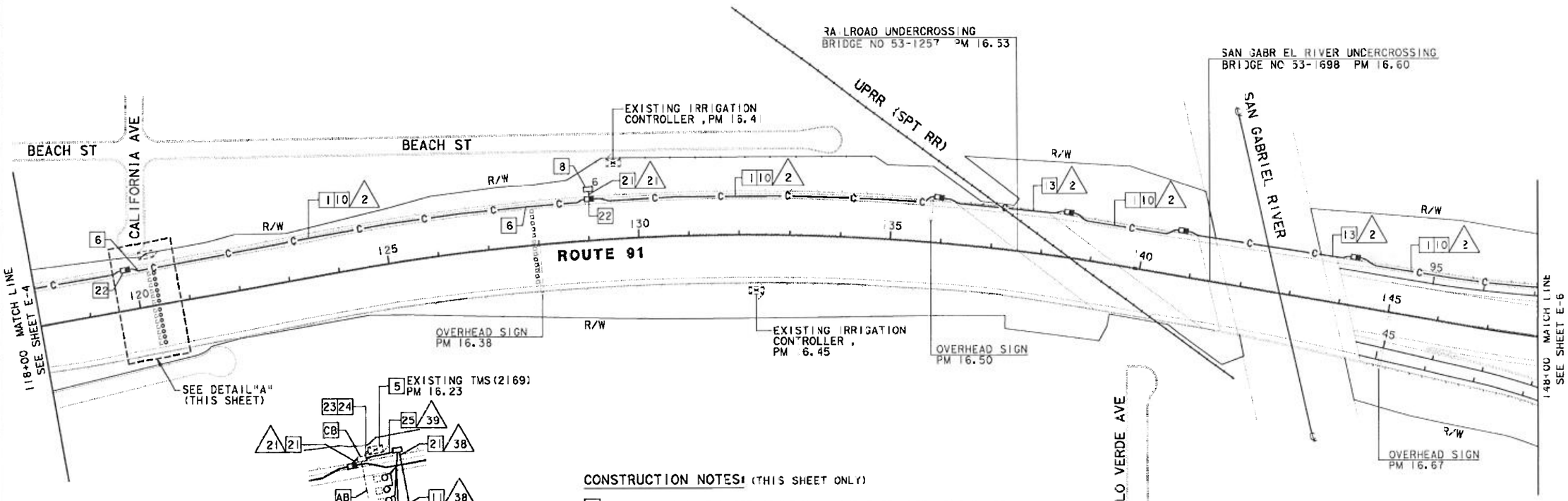

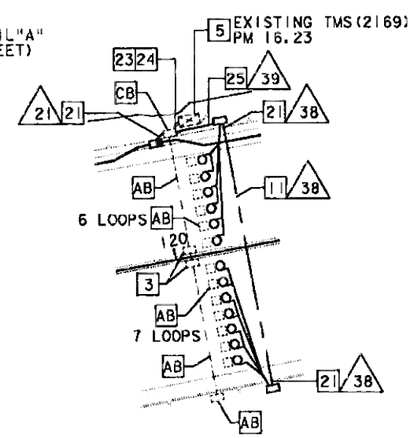

DETAIL "A"
SCALE: 1" = 50'

CONSTRUCTION NOTES: (THIS SHEET ONLY)

21 INSTALL CONDUIT UNDER SOUNDWALL. AVOID DRILLED HOLE PILES.
22 INSTALL PULL BOX IN ASPHALT SHOULDER. (SEE SHEET E-25)
23 REMOVE 13 EXISTING MAINLINE DLC FROM EXISTING CONDUIT.
24 ADD 13 NEW DLC IN EXISTING CONDUIT AND TERMINATE IN EXISTING TMS CABINET.
25 TRENCH AND INSTALL CONDUIT IN CONCRETE.

NOTE: THIS PLAN ACCURATE FOR ELECTRICAL WORK ONLY. SEE SHEET E-1 FOR LEGEND AND NOTES.

AS-BUILT
Contract No. 07- 120994
Resident Engineer: NGUYEN, L.
Completion Date: 09/15/2000

DETECTOR LOOP AND COMMUNICATION SYSTEM ROUTING

SCALE: 1" = 100'

E-5

STATE OF CALIFORNIA - DEPARTMENT OF TRANSPORTATION
PROJECT ENGINEER PAT SULLIV
CALCULATED/DESIGNED BY HHT DATE 6/97 REVISED BY
CHECKED BY NT 6/97 DATE REVISED

FORM DC-OE-92-PF (REV. 3/88)
FOR REDUCED PLANS ORIGINAL SCALE IS IN INCHES 0 1 2 3
USERNAME => trgnndo
DGN FILE => 712099u05_05134656
CU 07396
EA 120991
LAST REVISION 08-04-97
DATE PLOTTED => 5-Jun-1998
TIME PLOTTED => 13:48

DIST	COUNTY	ROUTE	POST MILES TOTAL PROJECT	SHEET NO.	TOTAL SHEETS
07	LA	91	14.6/20.7	48	107

Alebachew Bekele
REGISTERED ELECTRICAL ENGINEER

6-1-98
PLANS APPROVAL DATE

REGISTERED PROFESSIONAL ENGINEER
ALEBACHEW BEKELE
No. E15331
EXP. 6/30/99
ELECTRICAL
STATE OF CALIFORNIA

The State of California or its officers or agents shall not be responsible for the accuracy or completeness of electronic copies of this plan sheet.

AS-BUILT
Contract No. 07- 120994
Resident Engineer: NGUYEN, L.
Completion Date: 09/15/2000

CONDUIT AND CONDUCTOR SCHEDULE (THIS SHEET ONLY)

CONDUCTOR TYPE	FUNCTION	RUN 1	RUN 2	RUN 9	21	22	23	34	37	41
50P22 CABLE	DATA/PHONE	1	1	2						
36SMFO	VIDEO/DATA		1	1						
24SMFO	VIDEO/DATA	1		1						
12SMFO	VIDEO/DATA		1	1						
6P22 CABLE	DATA/PHONE				1	2	1	2		2
DLC	DETECTOR LEAD-IN CABLE							5	4	11
	INNERDUCT	1¼" 1¼"	1¼" 1¼"	1¼" 1¼"						
	CONDUIT SIZE	4"	4"	4"	2"	2"	3"	3"	3"	3"

CONSTRUCTION NOTES (THIS SHEET ONLY)

2 ADD 1 NEW DLC IN EXISTING CONDUIT AND TERMINATE IN EXISTING RMS CABINET.

22 COIL 25' OF 6P22 CABLE FOR FUTURE CONNECTOR METER.

23 REPLACE EXISTING PULL BOX WITH TYPE 5 (T) PULL BOX.

24 PULL BACK EXISTING 9 DLC FROM EXISTING CONDUIT AND REPLACE WITH 9 NEW DLC.

25 INSTALL FIBER DISTRIBUTION FRAME WITH 48 OPTICAL BULKHEAD ADAPTERS. TERMINATE 2-12SMFO AND 2-12SMFO SHORT HAUL VIDEO ON FIBER DISTRIBUTION FRAME. INSTALL 4-25P TERMINAL BLOCKS AND TERMINATE 2-50P22 CABLES IN THE EXISTING CABLE NODE CABINET. SEE FIBER AND TWISTED PAIR ASSIGNMENT TABLES.

26 ADD 6P22 IN EXISTING CONDUIT.

27 REMOVE 11 EXISTING MAINLINE LOOP DLC FROM EXISTING CONDUIT.

28 ADD 2-50P22 & 4-12SMFO TO EXISTING CONDUIT.

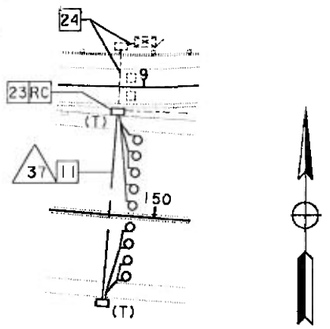

DETAIL "A"
SCALE: 1" = 50'

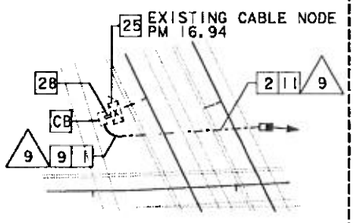

DETAIL "C"
SCALE: 1" = 50'

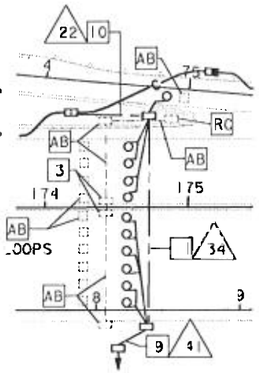

DETAIL "F"
SCALE: 1" = 50'

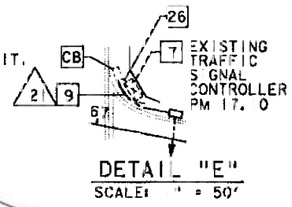

DETAIL "E"
SCALE: 1" = 50'

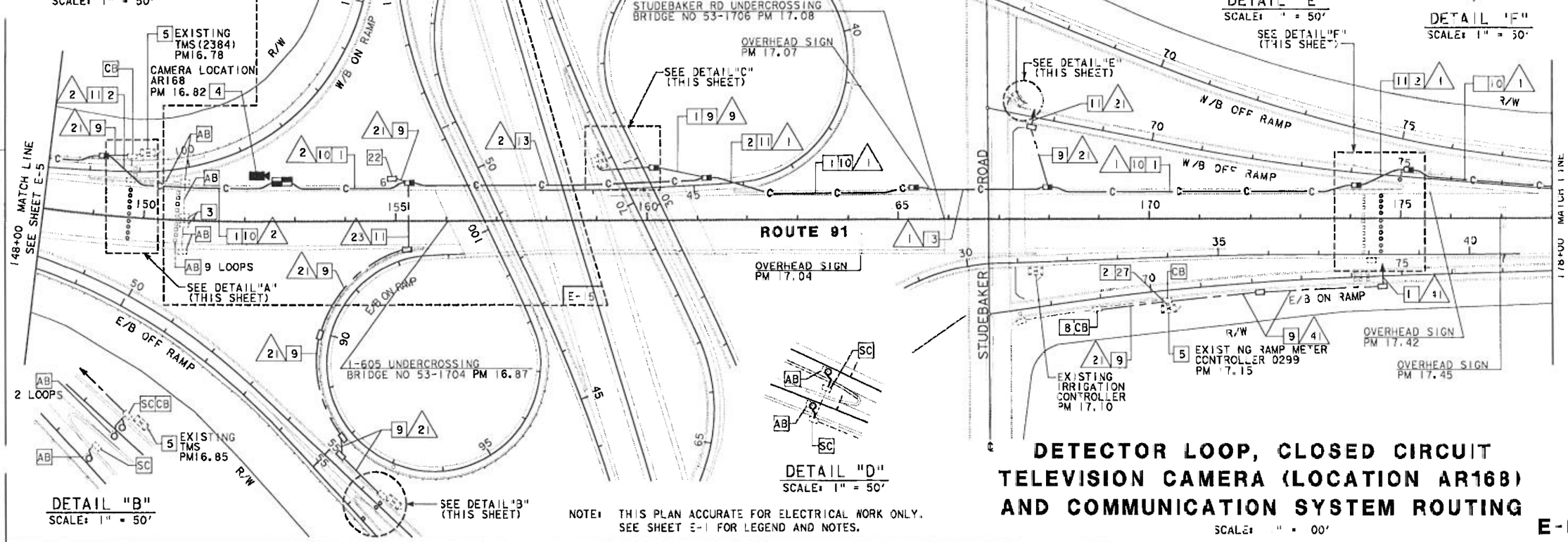

DETAIL "B"
SCALE: 1" = 50'

DETAIL "D"
SCALE: 1" = 50'

NOTE: THIS PLAN ACCURATE FOR ELECTRICAL WORK ONLY. SEE SHEET E-1 FOR LEGEND AND NOTES.

DETECTOR LOOP, CLOSED CIRCUIT TELEVISION CAMERA (LOCATION AR168) AND COMMUNICATION SYSTEM ROUTING

SCALE: 1" = 100'

E-6

LAST REVISION DATE PLOTTED => 5 Jun 1998
08-04-97 TIME PLOTTED => 13:47

CALCULATED/DESIGNED BY HHT DATE 6/97
CHECKED BY NT 6/97
REVISED BY DATE REVISED

PROJECT ENGINEER PAT SULLI

STATE OF CALIFORNIA - DEPARTMENT OF TRANSPORTATION
Caltrans

FOR REDUCED PLANS ORIGINAL SCALE IS IN INCHES 0 1 2 3

USERNAME => tronnda
DGN FILE => 712099\06 05134655

CU 07396 EA 120991

ORM DC-OE-92-PF (REV. 3/88)

DIST	COUNTY	ROUTE	POST MILES TOTAL PROJECT	SHEET NO.	TOTAL SHEETS
07	LA	91	14.6/20.7	49	107

Alebachew Bekele
REGISTERED ELECTRICAL ENGINEER

6-1-98
PLANS APPROVAL DATE

REGISTERED PROFESSIONAL ENGINEER ALEBACHEW BEKELE No. E 533 Exp. 6/30/01 ELECTRICAL STATE OF CALIFORNIA

The State of California or its officers or agents shall not be responsible for the accuracy or completeness of electronic copies of this plan sheet.

CONDUIT AND CONDUCTOR SCHEDULE (THIS SHEET ONLY)						
CONDUCTOR TYPE	FUNCTION	RUN 1			28	42
50P22 CABLE	DATA/PHONE	1				
24SMFO	VIDEO/DATA		1			
12SMFO	VIDEO/DATA			1		
DLC	DETECTOR LEAD-IN CABLE				6	12
	INNERDUCT		1¼"	1¼"		
	CONDUIT SIZE		4"		3"	3"

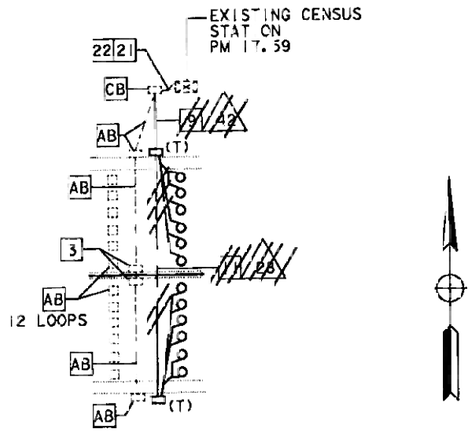

DETAIL "A"
SCALE: 1" = 50'

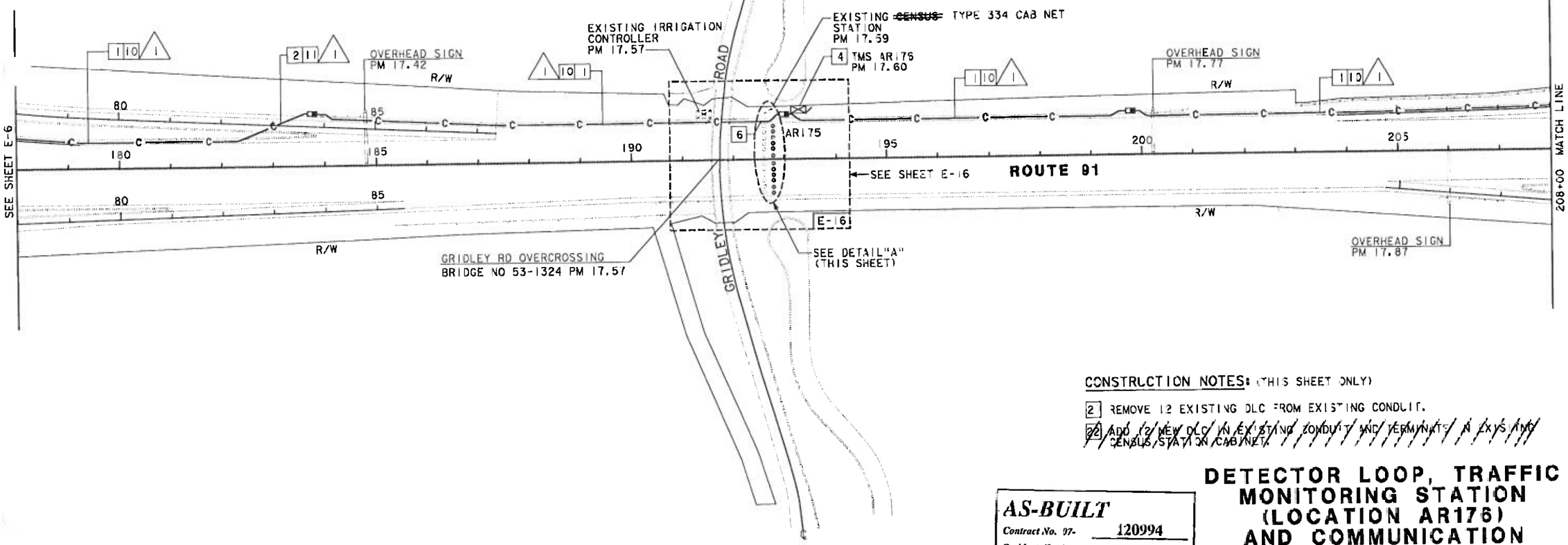

CONSTRUCTION NOTES: (THIS SHEET ONLY)

2 REMOVE 12 EXISTING DLC FROM EXISTING CONDUIT.

~~22 ADD 12 NEW DLC IN EXISTING CONDUIT AND TERMINATE IN EXISTING CENSUS STATION CABINET.~~

AS-BUILT
Contract No. 07- 120994
Resident Engineer: NGUYEN, L.
Completion Date: 09/15/2000

DETECTOR LOOP, TRAFFIC MONITORING STATION (LOCATION AR176) AND COMMUNICATION SYSTEM ROUTING

SCALE: 1" = 100'

E-7

NOTE: THIS PLAN ACCURATE FOR ELECTRICAL WORK ONLY. SEE SHEET E-1 FOR LEGEND AND NOTES.

FOR REDUCED PLANS ORIGINAL SCALE IS IN INCHES 0 1 2 3

CU 07396 | EA 20991

LAST REVISION 08-04-97

DIST	COUNTY	ROUTE	POST MILES TOTAL PROJECT	SHEET NO.	TOTAL SHEETS
07	LA	9	4.6/20.7	50	07

Alebachew Bekele
REGISTERED ELECTRICAL ENGINEER

6-1-98
PLANS APPROVAL DATE

The State of California or its officers or agents shall not be responsible for the accuracy or completeness of electronic copies of this plan sheet.

REGISTERED PROFESSIONAL ENGINEER — ALEBACHEW BEKELE — No. E 533 — Exp. 6/30/01 — ELECTRICAL — STATE OF CALIFORNIA

CONDUIT AND CONDUCTOR SCHEDULE (THIS SHEET ONLY)				
CONDUCTOR TYPE	FUNCTION	RUN △1		
50P22 CABLE	DATA/PHONE	1		
24SMFO	VIDEO/DATA		1	
12SMFO	VIDEO/DATA			1
6P22 CABLE	DATA/PHONE			
	INNERDUCT		1¼"	1¼"
	CONDUIT SIZE	4"		

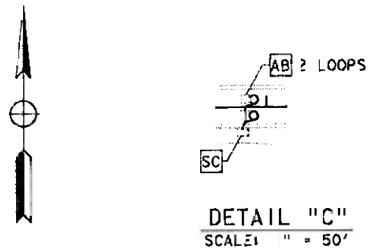

DETAIL "C"
SCALE: 1" = 50'

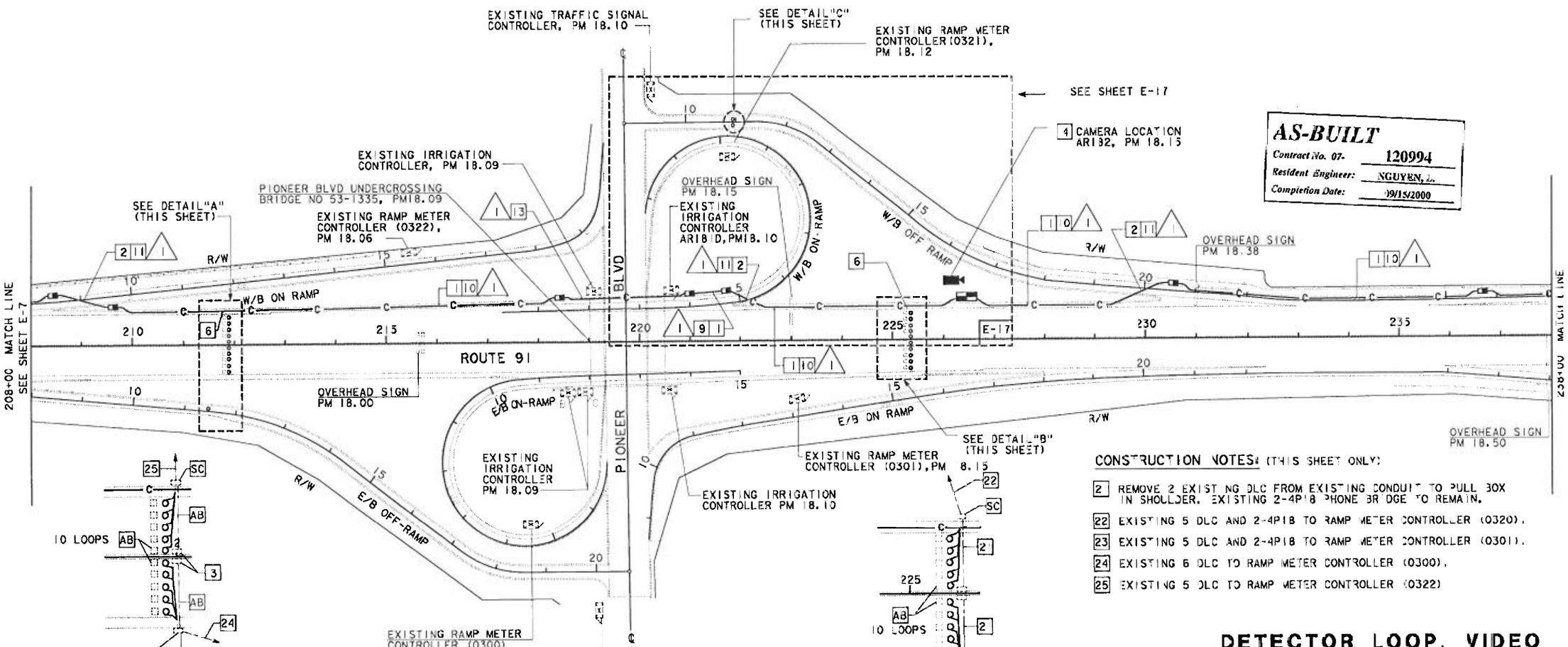

DETAIL "A"
SCALE: 1" = 50'

DETAIL "B"
SCALE: 1" = 50'

AS-BUILT
Contract No. 07- 120994
Resident Engineer: NGUYEN, L.
Completion Date: 09/15/2000

CONSTRUCTION NOTES: (THIS SHEET ONLY)

2 REMOVE 2 EXISTING DLC FROM EXISTING CONDUIT TO PULL BOX IN SHOULDER. EXISTING 2-4P18 PHONE SERVICE TO REMAIN.
22 EXISTING 5 DLC AND 2-4P18 TO RAMP METER CONTROLLER (0320).
23 EXISTING 5 DLC AND 2-4P18 TO RAMP METER CONTROLLER (0301).
24 EXISTING 6 DLC TO RAMP METER CONTROLLER (0300).
25 EXISTING 5 DLC TO RAMP METER CONTROLLER (0322)

DETECTOR LOOP, VIDEO NODE 2 (LOCATION AR182), CLOSED CIRCUIT TELEVISION CAMERA (LOCATION AR182) AND COMMUNICATION SYSTEM ROUTING

SCALE: 1" = 100'

NOTE: THIS PLAN ACCURATE FOR ELECTRICAL WORK ONLY. SEE SHEET E-1 FOR LEGEND AND NOTES.

E-8

LAST REVISION 08 04 97

DATE | REVISED BY | DATE REVISED
CALCULATED/ DESIGNED BY
CHECKED BY
PROJECT ENGINEER PAT SULLIVAN
STATE OF CALIFORNIA - DEPARTMENT OF TRANSPORTATION

FOR REDUCED PLANS ORIGINAL SCALE IS IN INCHES 0 2 3

CU 07396 EA 2099

FORM DC-OE-92-PF (REV. 3/88)

DIST	COUNTY	ROUTE	POST MILES TOTAL PROJECT	SHEET NO.	TOTAL SHEETS
07	LA	91	4.3/20.7	51	107

Alebachew Bekele
REGISTERED ELECTRICAL ENGINEER

6-1-98
PLANS APPROVAL DATE

REGISTERED PROFESSIONAL ENGINEER — ALEBACHEW BEKELE — No. E 13331 — 6/30/0 — ELECTRICAL — STATE OF CALIFORNIA

The State of California or its officers or agents shall not be responsible for the accuracy or completeness of electronic copies of this plan sheet.

CONDUCTOR TYPE	FUNCTION	RUN 1	21	22	25
50P22 CABLE	DATA/PHONE	1			
24SMFO	VIDEO/DATA		1		
12SMFO	VIDEO/DATA			1	
6P22 CABLE	DATA/PHONE				1
DLC	DETECTOR LEAD-IN CABLE				1
	INNERDUCT	1¼"	1¼"		
	CONDUIT SIZE	4"	2"	2"	2"

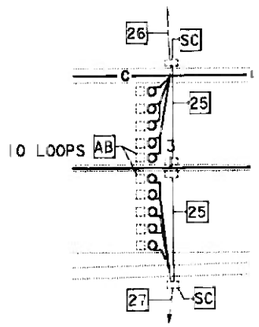

DETAIL "E"
SCALE: 1" = 50'

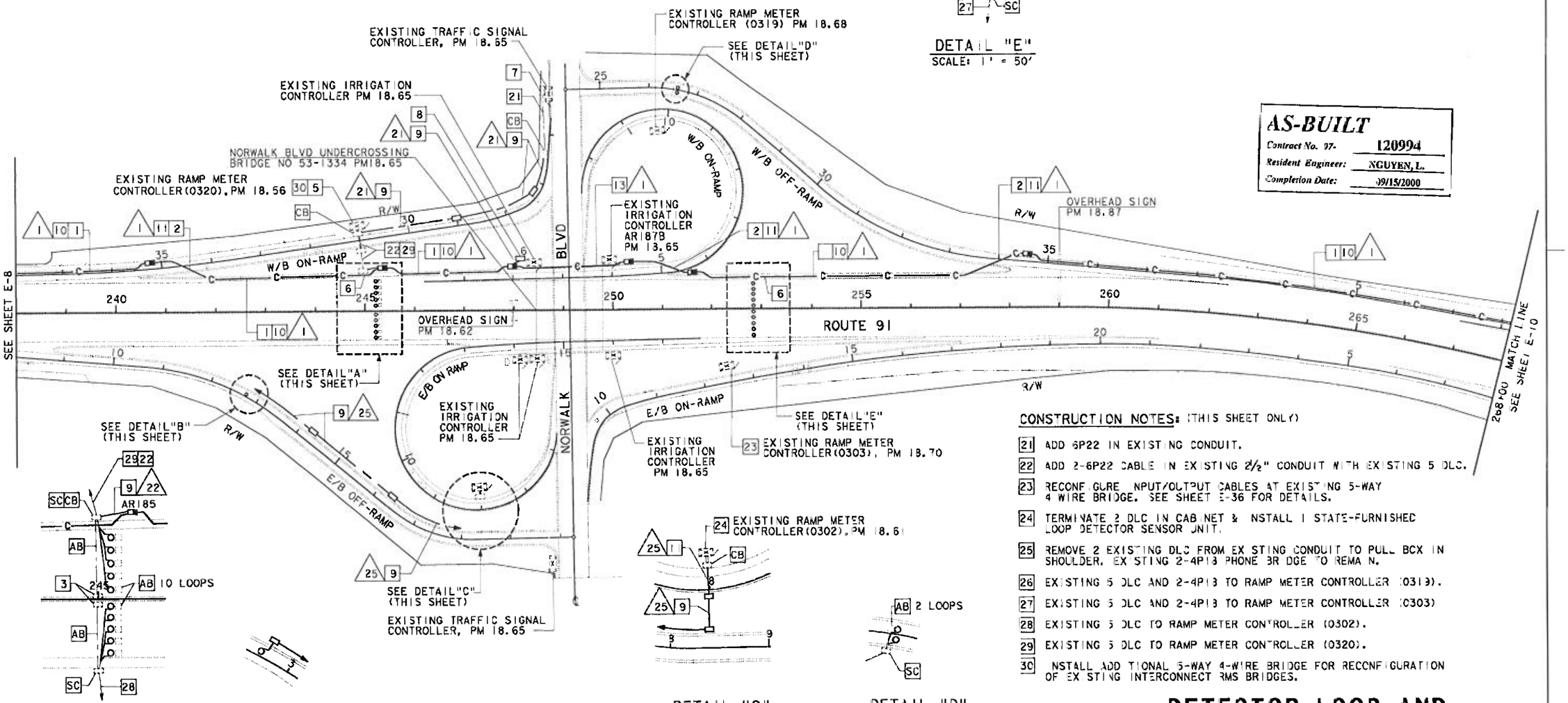

DETAIL "A"
SCALE: 1" = 50'

DETAIL "B"
SCALE: 1" = 50'

DETAIL "C"
SCALE: 1" = 50'

DETAIL "D"
SCALE: 1" = 50'

AS-BUILT
Contract No. 07- 120994
Resident Engineer: NGUYEN, L.
Completion Date: 09/15/2000

CONSTRUCTION NOTES: (THIS SHEET ONLY)

21 ADD 6P22 IN EXISTING CONDUIT.

22 ADD 2-6P22 CABLE IN EXISTING 2½" CONDUIT WITH EXISTING 5 DLC.

23 RECONFIGURE INPUT/OUTPUT CABLES AT EXISTING 5-WAY 4 WIRE BRIDGE. SEE SHEET E-36 FOR DETAILS.

24 TERMINATE 2 DLC IN CABINET & INSTALL 1 STATE-FURNISHED LOOP DETECTOR SENSOR UNIT.

25 REMOVE 2 EXISTING DLC FROM EXISTING CONDUIT TO PULL BOX IN SHOULDER. EXISTING 2-4P18 PHONE BRIDGE TO REMAIN.

26 EXISTING 5 DLC AND 2-4P18 TO RAMP METER CONTROLLER (0319).

27 EXISTING 5 DLC AND 2-4P18 TO RAMP METER CONTROLLER (0303)

28 EXISTING 5 DLC TO RAMP METER CONTROLLER (0302).

29 EXISTING 5 DLC TO RAMP METER CONTROLLER (0320).

30 INSTALL ADDITIONAL 5-WAY 4-WIRE BRIDGE FOR RECONFIGURATION OF EXISTING INTERCONNECT RMS BRIDGES.

DETECTOR LOOP AND COMMUNICATION SYSTEM ROUTING

SCALE: 1" = 100'

NOTE: THIS PLAN ACCURATE FOR ELECTRICAL WORK ONLY. SEE SHEET E-1 FOR LEGEND AND NOTES.

E-9

LAST REVISION 08-04-97

DATE	REVISED BY	DATE REVISED
6/97	HHT	6/97 NT

CALCULATED/DESIGNED BY
CHECKED BY

PROJECT ENGINEER
PAT SULLIVAN

STATE OF CALIFORNIA - DEPARTMENT OF TRANSPORTATION
Caltrans

FORM DG-DE-92-PF (REV. 3/88)

FOR REDUCED PLANS ORIGINAL SCALE IS IN INCHES 0 1 2 3

CU 07396 EA 2099

D ST	COUNTY	ROUTE	POST MILES TOTAL PROJECT	SHEET NO.	TOTAL SHEETS
07	LA	9	4.6/20.7	52	07

REGISTERED ELECTRICAL ENGINEER

6-1-98
PLANS APPROVAL DATE

REGISTERED PROFESSIONAL ENGINEER — ALEBACHEW JEKELE — No. E 5331 — EXP. 6/30/01 — ELECTRICAL — STATE OF CALIFORNIA

The State of California or its officers or agents shall not be responsible for the accuracy or completeness of electronic copies of this xion sheet.

CONDUIT AND CONDUCTOR SCHEDULE (THIS SHEET ONLY)

CONDUCTOR TYPE	FUNCTION	RUN 1	21	22	24	25	27	28	33	41	43
50P22 CABLE	DATA/PHONE	1									
24SMFO	VIDEO/DATA										
12SMFO	VIDEO/DATA	1									
6P22 CABLE	DATA/PHONE		1	2						2	
DLC	DETECTOR LEAD-IN CABLE				5	2	5	6	5	11	11
	INNERDUCT	1¼"									
	CONDUIT SIZE	4"	2"	2"	3"	2"	3"	3"	2"	3"	3"

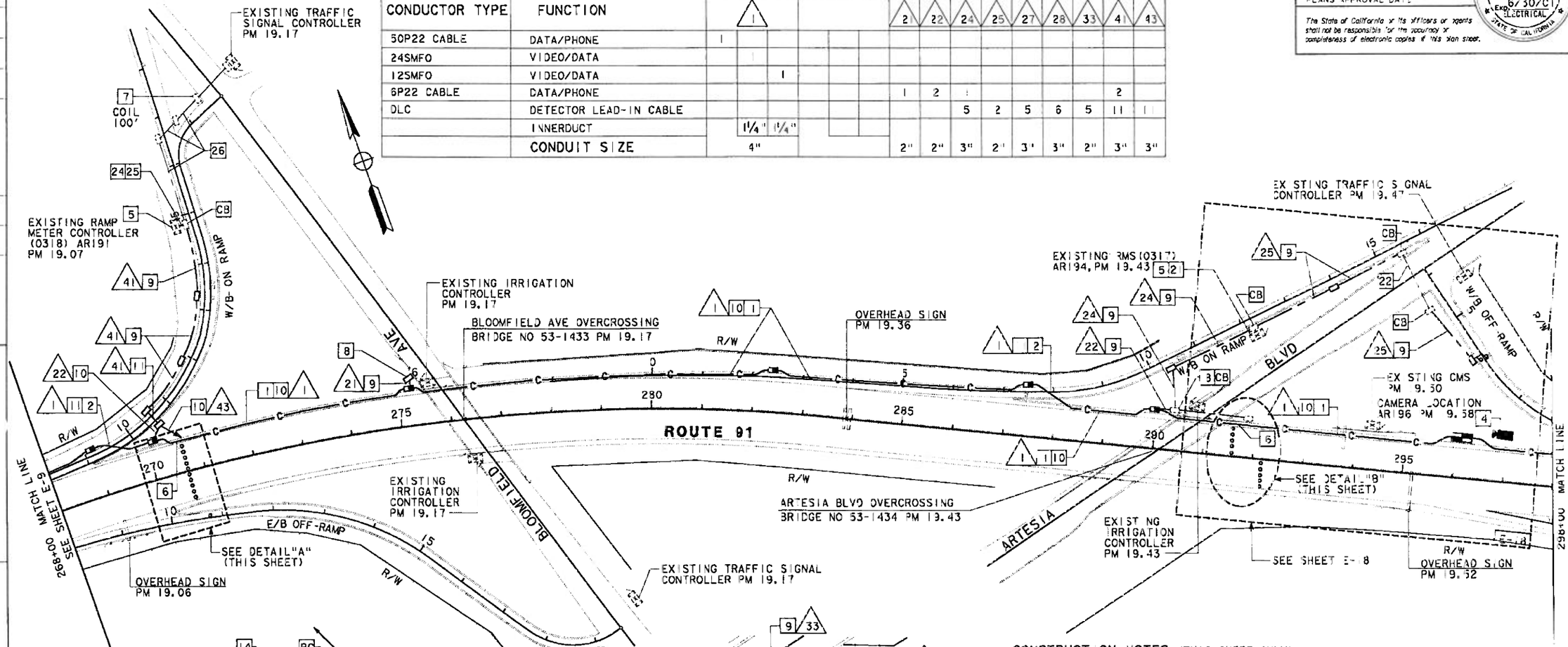

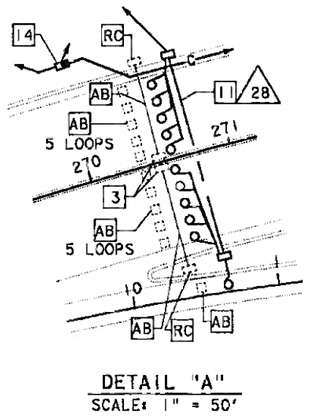

DETAIL "A"
SCALE: 1" = 50'

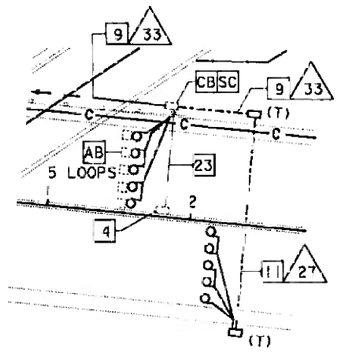

DETAIL "B"
SCALE: 1" = 50'

CONSTRUCTION NOTES: (THIS SHEET ONLY)

2. TERMINATE 7 DLC IN CABINET. USE EX STING CONDUIT FROM PULL BOX NTO CABINET. INSTALL 4 STATE FURN SHED LOOP DETECTOR SENSOR UNIT.
22. ADD 2 NEW DLC TO EXISTING CONDUIT.
23. REMOVE 2 EXISTING DLC FROM EXISTING CONDUIT.
24. REMOVE 11 EX STING MAINLINE DLC FROM EX STING CONDUIT.
25. ADD 6P22 CABLE & 1 NEW DLC IN EX STING CONDUIT.
26. ADD 6P22 CABLE IN EXISTING CONDUIT.

AS-BUILT
Contract No. 97- 120994
Resident Engineer: NGUYEN, L.
Completion Date: 09/15/2000

DETECTOR LOOP, CLOSED CIRCUIT TELEVISION CAMERA (LOCATION AR196) AND COMMUNICATION SYSTEM ROUTING

SCALE: 1" = 00'

E-10

NOTE: THIS PLAN ACCURATE FOR ELECTRICAL WORK ONLY. SEE SHEET E-1 FOR LEGEND AND NOTES.

DATE	REVISED BY
6/97	DATE REVISED
HHT	NT
CALCULATED/ DESIGNED BY	CHECKED BY

PROJECT ENGINEER: PAT SULL

STATE OF CALIFORNIA - DEPARTMENT OF TRANSPORTATION

LAST REVISION 08 04 97

FORM DC-OE-92-PF (REV. 3/88)

FOR REDUCED PLANS ORIGINAL SCALE IS IN INCHES 0 1 2 3

CU 07396 EA 120991

DIST	COUNTY	ROUTE	POST MILES TOTAL PROJECT	SHEET NO.	TOTAL SHEETS
07	LA	91	4.6/20.1	53	07

Alebachew Bekele
REGISTERED ELECTRICAL ENGINEER

6-1-98
PLANS APPROVAL DATE

REGISTERED PROFESSIONAL ENGINEER — ALEBACHEW BEKELE — No. E 5331 — Exp 6/30/01 — ELECTRICAL — STATE OF CALIFORNIA

The State of California or its officers or agents shall not be responsible for the accuracy or completeness of electronic copies of this plan sheet.

CONDUIT AND CONDUCTOR SCHEDULE (THIS SHEET ONLY)

CONDUCTOR TYPE	FUNCTION	RUN 1	1	1	2	22	28	32
50P22 CABLE	DATA/PHONE	1						
24SMFO	VIDEO/DATA		1					
12SMFO	VIDEO/DATA			1				
6P22 CABLE	DATA/PHONE				1	2		2
DLC	DETECTOR LEAD-IN CABLE						6	6
	INNERDUCT		1¼"	1¼"				
	CONDUIT SIZE		4"		2"	2"	3"	3"

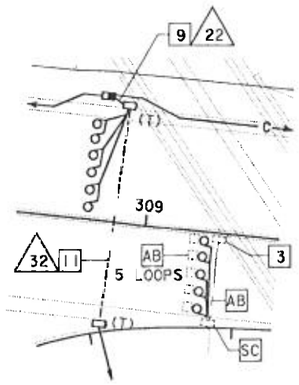

DETAIL "B"
SCALE: 1" = 50'

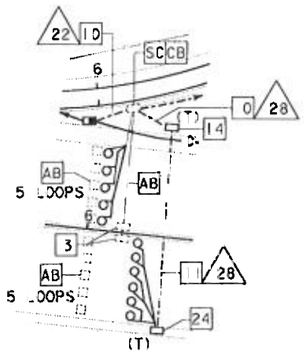

DETAIL 'C'
SCALE: 1" = 50'

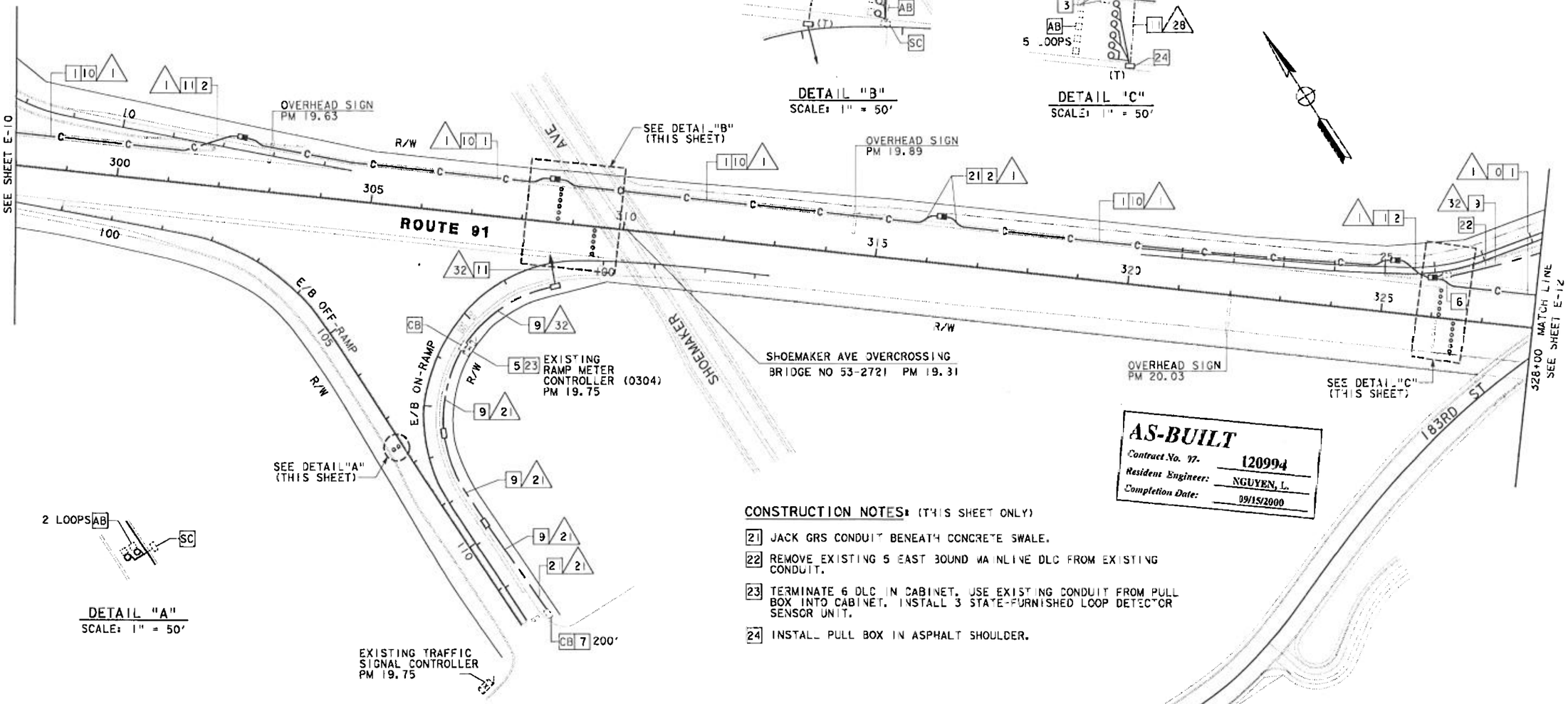

DETAIL "A"
SCALE: 1" = 50'

AS-BUILT
Contract No. 97- 120994
Resident Engineer: NGUYEN, L.
Completion Date: 09/15/2000

CONSTRUCTION NOTES: (THIS SHEET ONLY)

21 JACK GRS CONDUIT BENEATH CONCRETE SWALE.

22 REMOVE EXISTING 5 EAST BOUND MAINLINE DLC FROM EXISTING CONDUIT.

23 TERMINATE 6 DLC IN CABINET. USE EXISTING CONDUIT FROM PULL BOX INTO CABINET. INSTALL 3 STATE-FURNISHED LOOP DETECTOR SENSOR UNIT.

24 INSTALL PULL BOX IN ASPHALT SHOULDER.

NOTE: THIS PLAN ACCURATE FOR ELECTRICAL WORK ONLY. SEE SHEET E-1 FOR LEGEND AND NOTES.

DETECTOR LOOP AND COMMUNICATION SYSTEM ROUTING

SCALE: 1" = 00'

E-11

DATE	REVISED BY
6/97	DATE REVISED

CALCULATED/DESIGNED BY: HHT
CHECKED BY: NT

PROJECT ENGINEER: PAT SULLI

STATE OF CALIFORNIA - DEPARTMENT OF TRANSPORTATION

LAST REVISION 08 05 97

FORM DC-OE-92-PF (REV. 3/88)

FOR REDUCED PLANS ORIGINAL SCALE IS IN INCHES 0 1 2 3

CU 07396 EA 120991

CONDUIT AND CONDUCTOR SCHEDULE (THIS SHEET ONLY)							
CONDUCTOR TYPE	FUNCTION	RUN 1			2	40	32
50P22 CABLE	DATA/PHONE	1					
24SMFO	VIDEO/DATA		1				
12SMFO	VIDEO/DATA			1			
6P22 CABLE	DATA/PHONE				1	1	2
DLC	DETECTOR LEAD-IN CABLE					6	6
	INNERDUCT	1¼"	1¼"				
	CONDUIT SIZE	4"			2"	3"	3"

CONSTRUCTION NOTES: (THIS SHEET ONLY)

21 ADD 6P22 CABLE & 6 NEW DLC TO EXISTING CONDUIT AND TERM NATE IN EXISTING RAMP METER CONTROLLER CAB NET.

22 REMOVE 5 EXISTING EAST BOUND MAINLINE DLC FROM EXISTING CONDUIT.

23 LOOPS SHOWN FOR REFERENCE ONLY. SEE SHEET E-20 FOR INSTALLATION DETAILS.

D ST	COUNTY	ROUTE	POST MILES TOTAL PROJECT	SHEET NO.	TOTAL SHEETS
07	LA	91	14.6/20.7	54	107

Alebachew Bekele
REGISTERED ELECTRICAL ENGINEER

6-1-98
PLANS APPROVAL DATE

ALEBACHEW BEKELE No. E13331 Exp. 6/30/01 ELECTRICAL STATE OF CALIFORNIA — REGISTERED PROFESSIONAL ENGINEER

The State of California or its officers or agents shall not be responsible for the accuracy or completeness of electronic copies of this plan sheet.

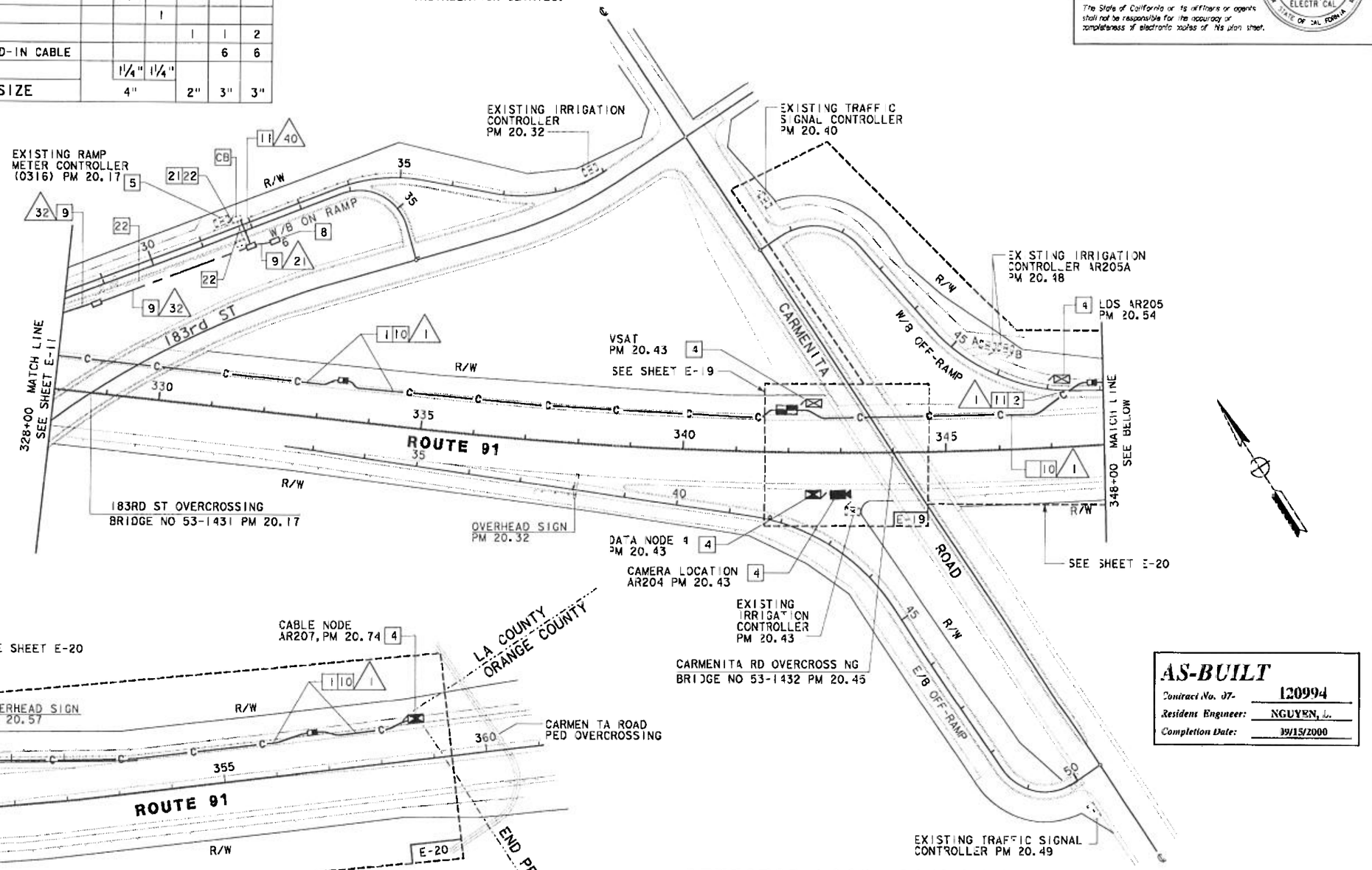

AS-BUILT

Contract No. 07- 120994
Resident Engineer: NGUYEN, L.
Completion Date: 09/15/2000

DETECTOR LOOP, CABLE NODE (LOCATION AR207), DATA NODE 4 (LOCATION AR207), TRAFFIC MONITORING STATION (LOCATION AR204), CLOSED CIRCUIT TELEVISION CAMERA (LOCATION AR204) AND COMMUNICATION SYSTEM ROUTING

SCALE: 1" = 100'

NOTE: THIS PLAN ACCURATE FOR ELECTRICAL WORK ONLY. SEE SHEET E-1 FOR LEGEND AND NOTES.

E-12

DATE	REVISED BY	DATE REVISED
6/97	HHT	6/97
	NT	

CALCULATED/DESIGNED BY
CHECKED BY

PROJECT ENGINEER
PAT SULLIVAN

STATE OF CALIFORNIA - DEPARTMENT OF TRANSPORTATION

FORM DC-OE-92-PF (REV. 3/88)

FOR REDUCED PLANS ORIGINAL SCALE IS IN INCHES 0 1 2 3

CU 07396 EA 120991