INFORMATION HANDOUT

For Contract No. 07-3X7114
At 07-LA-60-R7.4/R8.1

Identified by
Project ID 0715000132

MATERIALS INFORMATION

Battery Backup System

Geotechnical Design Report

Dist	COUNTY	LOCATION CODE	POST MILES TOTAL PROJECT	SHEET No.	TOTAL SHEETS

Theresa Gabriel 12-20-07
REGISTERED CIVIL ENGINEER DATE

PLANS APPROVAL DATE

REGISTERED PROFESSIONAL ENGINEER Theresa A. Gabriel No. E15129 Exp. 6-30-14 ELECT STATE OF CALIFORNIA

THE STATE OF CALIFORNIA OR ITS OFFICERS OR AGENTS SHALL NOT BE RESPONSIBLE FOR THE ACCURACY OR COMPLETENESS OF SCANNED COPIES OF THIS PLAN SHEET.

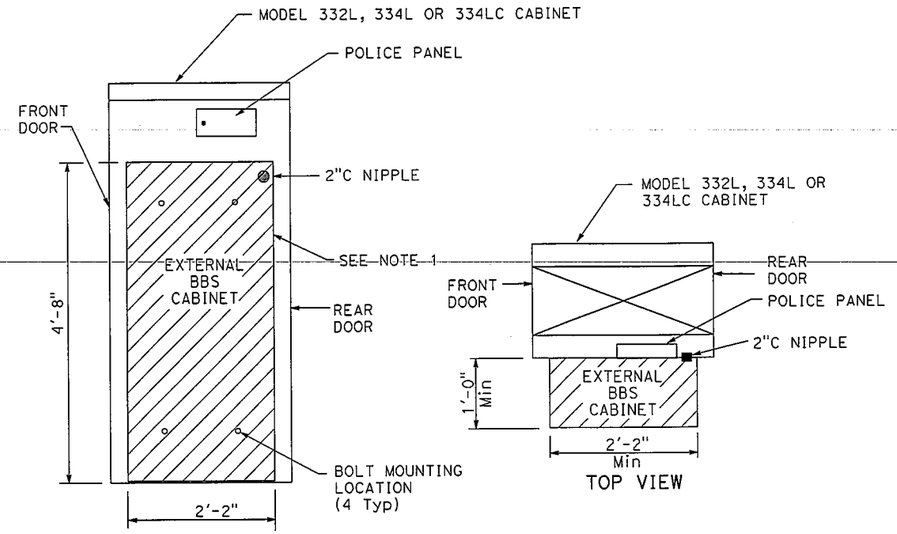

SIDE VIEW

TOP VIEW

EXTERNAL BBS CABINET MOUNTED TO THE MODEL 332L, 334L OR 334LC CABINET

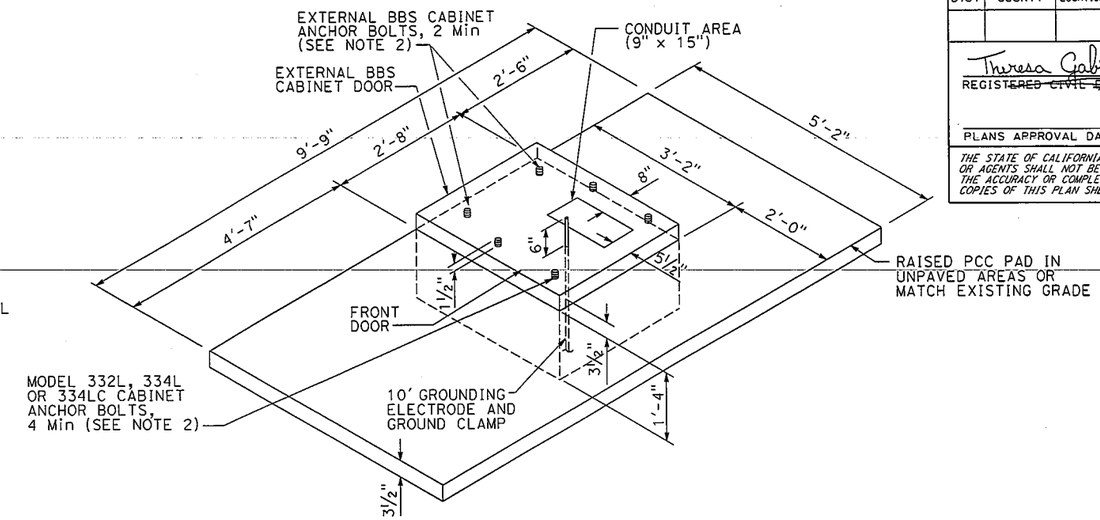

LEFT-HAND INSTALLATION DETAIL A

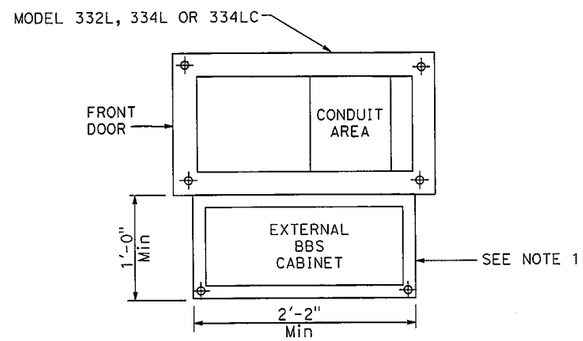

BASE PLAN FOR BBS MOUNTED TO THE MODEL 332L, 334L OR 334LC CABINET

(FOR DIMENSIONS AND DETAILS NOT SHOWN, SEE SHEET A6-1 TO A6-4, CABINET HOUSING DETAILS OF THE TRANSPORTATION ELECTRICAL EQUIPMENT SPECIFICATION (TEES))

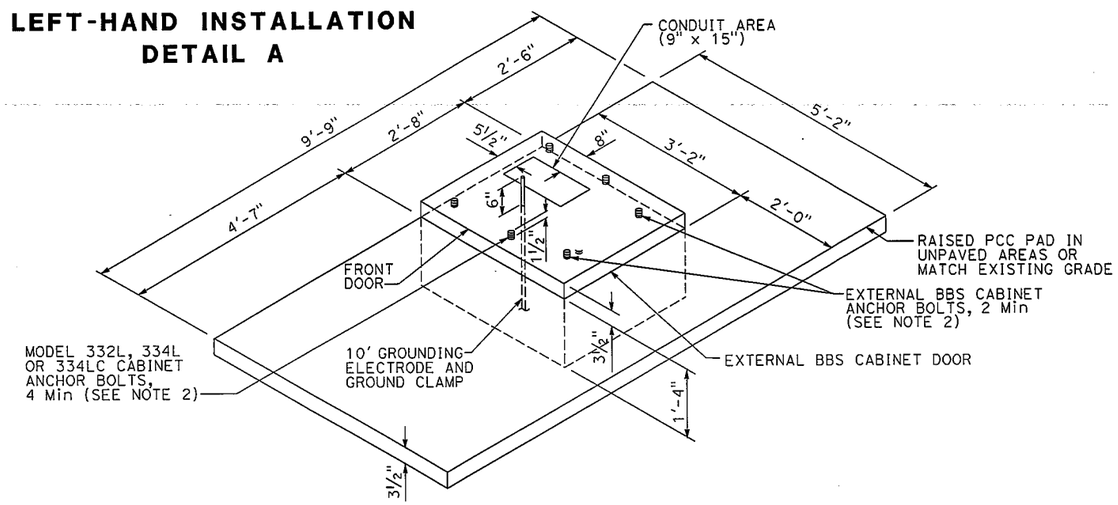

RIGHT-HAND INSTALLATION DETAIL B

MODIFIED MODEL 332L, 334L OR 334LC CABINET FOUNDATION DETAIL FOR BATTERY BACKUP SYSTEM (BBS)

(FOR ADDITIONAL NOTES, SEE SHEET ES-3C OF THE STANDARD PLANS FOR MODEL 332L, 334L OR 334LC CABINETS)

NOTES: (THIS SHEET ONLY)

1. THE EXTERNAL BBS CABINET SHALL BE MOUNTED TO THE MODEL 332L, 334L OR 334LC CABINET WITH FOUR 18-8 STAINLESS STEEL Hex HEAD, FULLY-THREADED, ⅜"-16 x 1" BOLTS; TWO WASHERS PER BOLT, DESIGNED FOR ⅜" BOLTS AND ARE 18-8 STAINLESS STEEL, 1" OUTSIDE DIAMETER, ROUND, AND FLAT; AND ONE K-LOCK NUT PER BOLT THAT IS 18-8 STAINLESS STEEL AND A Hex-NUT. THE ENGINEER WILL HAVE TO APPROVE THE BOLT MOUNTING LOCATION PRIOR TO INSTALLATION.
2. THE ANCHOR BOLTS SHALL BE ¾" Dia x 15" WITH A 2"-90° BEND. THE CABINET MANUFACTURER'S SPECIFICATION SHALL DETERMINE THE LOCATION OF THE ANCHOR BOLTS IN THE FOUNDATION. THE ENGINEER WILL HAVE TO APPROVE THE ANCHOR BOLTS AND ITS LOCATION IN THE FOUNDATION PRIOR TO CONSTRUCTION.
3. THE CONTRACTOR SHALL VERIFY THE DIMENSIONS OF THE BBS CABINET PRIOR TO CONSTRUCTING THE FOUNDATION OF THE Std MODEL 332L, 334L OR 334LC CABINET FOUNDATION. THE ENGINEER WILL HAVE TO APPROVE ANY NECESSARY DEVIATIONS PRIOR TO CONSTRUCTION.
4. ALL DIMENSIONS ARE NOMINAL.

ELECTRICAL SYSTEMS
(BATTERY BACKUP SYSTEM FOUNDATION DETAILS)

NO SCALE

REVISED BY | DATE REVISED
CALCULATED-DESIGNED BY | CHECKED BY
FUNCTIONAL SUPERVISOR
STATE OF CALIFORNIA - DEPARTMENT OF TRANSPORTATION
Caltrans

LAST REVISION 2-2-09 | DATE PLOTTED => 14-FEB-2014 | TIME PLOTTED => 14:09

Dist	COUNTY	LOCATION CODE	POST MILES TOTAL PROJECT	SHEET No.	TOTAL SHEETS

Theresa Gabriel 12-20-07
REGISTERED CIVIL ENGINEER DATE

PLANS APPROVAL DATE

REGISTERED PROFESSIONAL ENGINEER Theresa A. Gabriel No. E15129 Exp. 6-30-10 ELECT STATE OF CALIFORNIA

THE STATE OF CALIFORNIA OR ITS OFFICERS OR AGENTS SHALL NOT BE RESPONSIBLE FOR THE ACCURACY OR COMPLETENESS OF SCANNED COPIES OF THIS PLAN SHEET.

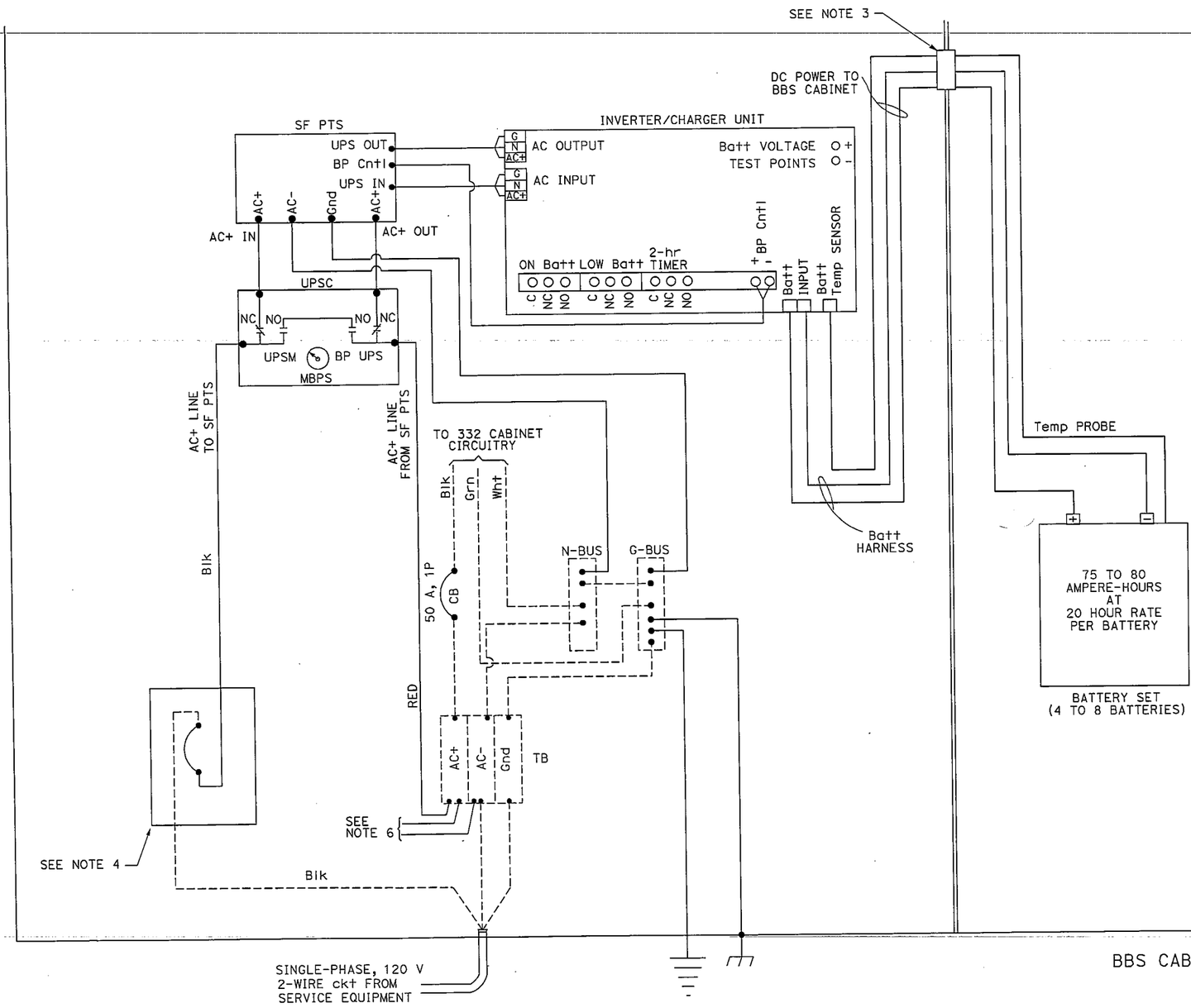

LEGEND: (THIS SHEET ONLY)

PTS = POWER TRANSFER SWITCH
UPS = UNINTERRUPTIBLE POWER SUPPLY
UPSC = UNINTERRUPTIBLE POWER SUPPLY CONTROLLER
UPSM = UPS MODE
BP = BYPASS
MBPS = MANUAL BYPASS SWITCH
AC+ = UNGROUNDED CONDUCTOR
AC- = GROUNDED CONDUCTOR
C = COMMON
Grn = GREEN
Blk = BLACK
Wht = WHITE
SF = STATE-FURNISHED
Batt = BATTERY
Temp = TEMPERATURE
TB = TERMINAL BOARD
Cntl = CONTROL
Gnd = GROUND

NOTES: (THIS SHEET ONLY)

1. TYPE B REFERS TO THE BBS EQUIPMENT FROM MANUFACTURER B.
2. CASE-2 REFERS TO THE SITUATION WHEN ONLY THE BATTERIES ARE INSTALLED IN THE BBS CABINET. THE REMAINING EQUIPMENT IS PLACED IN THE 332 CONTROLLER CABINET.
3. THE LOCATION OF THE 2"C NIPPLE WILL BE DETERMINED BY THE ENGINEER IN THE FIELD.
4. THE CONTRACTOR SHALL FURNISH AND INSTALL A NEMA-1 ENCLOSURE WITH 30 A, 1P, 120/240 VOLTS RATED CIRCUIT BREAKER MANUFACTURED PER UL STANDARD 489.
5. A TEMPERATURE PROBE SHALL BE ATTACHED TO THE BATTERY BY TAPE OR ATTACHED TO THE NEGATIVE TERMINAL OF THE BATTERY.
6. THE ELECTRICAL POWER FOR THE COOLING FAN FOR THE BBS CABINET SHALL BE TAPPED FROM THE BOTTOM OF THE TB IN THE 332 CABINET.
7. THE CONTRACTOR SHALL PROVIDE A 9-WIRE WIRING HARNESS OR BUNDLED 9 MULTICOLOR CONDUCTORS, #18 AWG WIRES FROM THE RELAY ON THE INVERTER/CHARGER UNIT TO THE CONTROLLER. THE ENDS OFTHE CONDUCTORS SHALL BE INSULATED WITH TAPE AND A SIX-FOOT COIL ON EACH END.

ELECTRICAL SYSTEMS
(BBS POWER CONNECTION DIAGRAM, TYPE A, CASE-2)

NO SCALE

REVISED BY	DATE REVISED

CALCULATED-DESIGNED BY
CHECKED BY
FUNCTIONAL SUPERVISOR

STATE OF CALIFORNIA - DEPARTMENT OF TRANSPORTATION
Caltrans

LAST REVISION 2-2-09
DATE PLOTTED => 13-MAR-2009
TIME PLOTTED => 09:07

Dist	COUNTY	LOCATION CODE	POST MILES TOTAL PROJECT	SHEET No.	TOTAL SHEETS

Theresa Gabriel 12-20-07
REGISTERED CIVIL ENGINEER DATE

PLANS APPROVAL DATE

THE STATE OF CALIFORNIA OR ITS OFFICERS OR AGENTS SHALL NOT BE RESPONSIBLE FOR THE ACCURACY OR COMPLETENESS OF SCANNED COPIES OF THIS PLAN SHEET.

REGISTERED PROFESSIONAL ENGINEER Theresa A. Gabriel No. E15129 Exp. 6-30-14 ELECT STATE OF CALIFORNIA

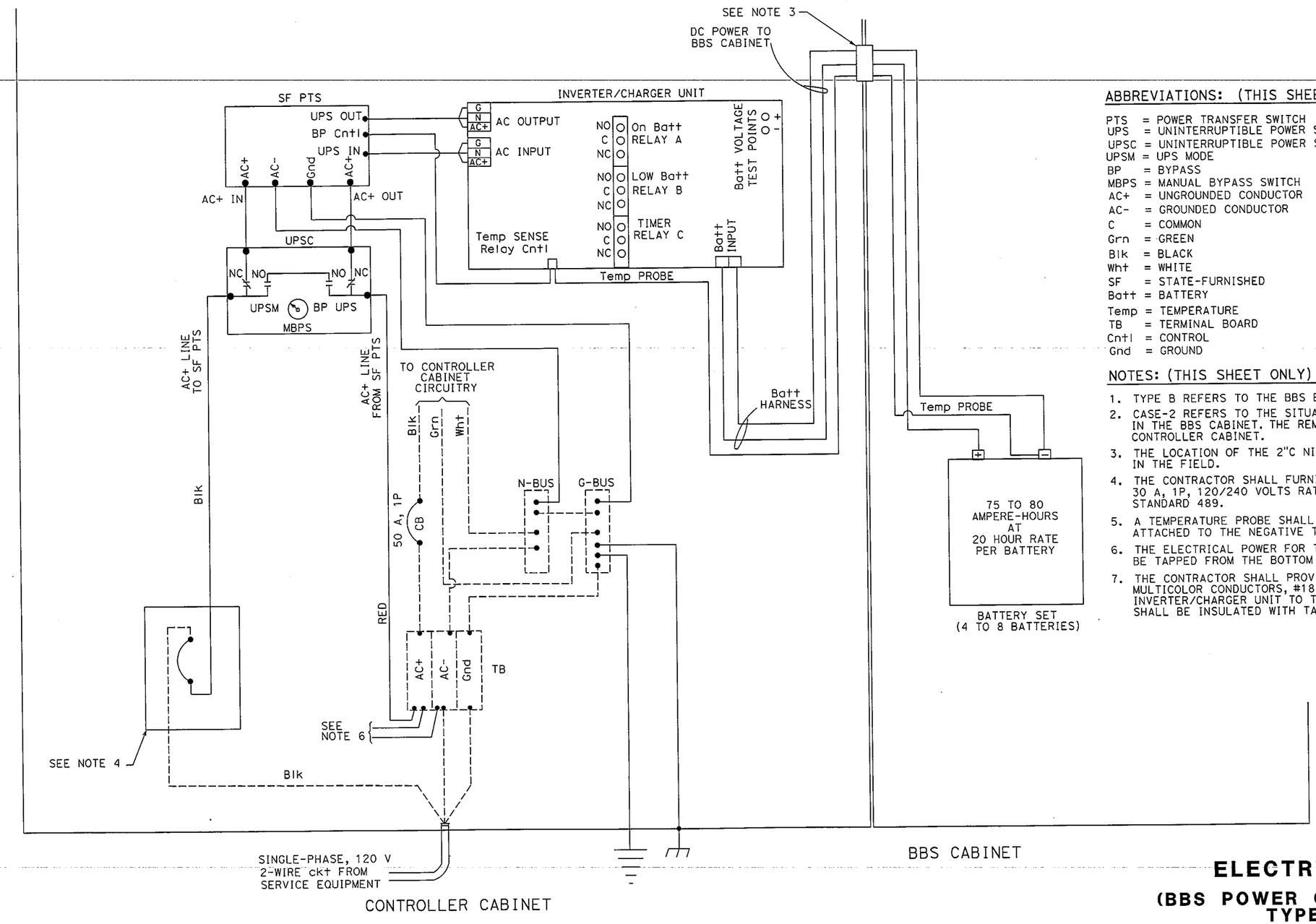

ABBREVIATIONS: (THIS SHEET ONLY)

PTS = POWER TRANSFER SWITCH
UPS = UNINTERRUPTIBLE POWER SUPPLY
UPSC = UNINTERRUPTIBLE POWER SUPPLY CONTROLLER
UPSM = UPS MODE
BP = BYPASS
MBPS = MANUAL BYPASS SWITCH
AC+ = UNGROUNDED CONDUCTOR
AC- = GROUNDED CONDUCTOR
C = COMMON
Grn = GREEN
Blk = BLACK
Wht = WHITE
SF = STATE-FURNISHED
Batt = BATTERY
Temp = TEMPERATURE
TB = TERMINAL BOARD
Cntl = CONTROL
Gnd = GROUND

NOTES: (THIS SHEET ONLY)

1. TYPE B REFERS TO THE BBS EQUIPMENT FROM MANUFACTURER B.
2. CASE-2 REFERS TO THE SITUATION WHEN ONLY THE BATTERIES ARE INSTALLED IN THE BBS CABINET. THE REMAINING EQUIPMENT IS PLACED IN THE CONTROLLER CABINET.
3. THE LOCATION OF THE 2"C NIPPLE WILL BE DETERMINED BY THE ENGINEER IN THE FIELD.
4. THE CONTRACTOR SHALL FURNISH AND INSTALL A NEMA-1 ENCLOSURE WITH 30 A, 1P, 120/240 VOLTS RATED CIRCUIT BREAKER MANUFACTURED PER UL STANDARD 489.
5. A TEMPERATURE PROBE SHALL BE ATTACHED TO THE BATTERY BY TAPE OR ATTACHED TO THE NEGATIVE TERMINAL OF THE BATTERY.
6. THE ELECTRICAL POWER FOR THE COOLING FAN FOR THE BBS CABINET SHALL BE TAPPED FROM THE BOTTOM OF THE TB IN THE CONTROLLER CABINET.
7. THE CONTRACTOR SHALL PROVIDE A 9-WIRE WIRING HARNESS OR BUNDLED 9 MULTICOLOR CONDUCTORS, #18 AWG WIRES FROM THE RELAY ON THE INVERTER/CHARGER UNIT TO THE CONTROLLER. THE ENDS OFTHE CONDUCTORS SHALL BE INSULATED WITH TAPE AND A SIX-FOOT COIL ON EACH END.

ELECTRICAL SYSTEM

(BBS POWER CONNECTION DIAGRAM, TYPE B, CASE-2)

REVISED BY	DATE REVISED
CALCULATED-DESIGNED BY	CHECKED BY
FUNCTIONAL SUPERVISOR	

STATE OF CALIFORNIA - DEPARTMENT OF TRANSPORTATION
Caltrans

LAST REVISION 3-11-09 | DATE PLOTTED => 14-FEB-2014 | TIME PLOTTED => 14:11

Me m o r a n d u m

To	: HOWARD NG, PE STRUCUTRE DEISGN SOUTH 2– Branch 20	**Date**	: October 14, 2013
		File No.	: 07-LA-60 PM 7.4/8.1 Project ID 0712000300 EA 07-3X7101
Attn.	: Edward Bin Mu, Project Engineers		

From : **DEPARTMENT OF TRANSPORTATION**
DIVISION OF ENGINEERING SERVICES
METS-Geotechnical Services
Office of Geotechnical Design South-1

Subject : **Geotechnical Design Report**

The following is the Geotechnical Design Report (GDR) that includes geotechnical recommendations for the ramp realignment as part of the permanent restoration project of Paramount Boulevard Overcrossing on Route 60, in the city of Montebello, Los Angeles County.

1. Introduction and Geotechnical Project Scope

The project involves a permanent restoration of the Paramount Boulevard interchange following replacement of the overcrossing that was damaged by a truck fire on December 14, 2011. The project proposes to widen Paramount Boulevard within the state right-of-way, realign, and upgrade the affected two quadrant cloverleaf ramps to current standards. As a part of the project, construction of retaining walls on the Westbound Paramount Boulevard Off-Ramp will be required. The project location is shown on the Figure 1.

The geotechnical scope of work for this project includes:

- Review of As-Built plans and Log of Test Borings (LOTBs)
- Review of previous Foundation Reports (FRs)
- Perform subsurface investigation
- Perform laboratory testing on soil samples obtained during field investigation
- Evaluate site geology, subsurface, and groundwater conditions
- Perform site seismicity study
- Perform engineering analyses
- Provide geotechnical recommendations and construction considerations

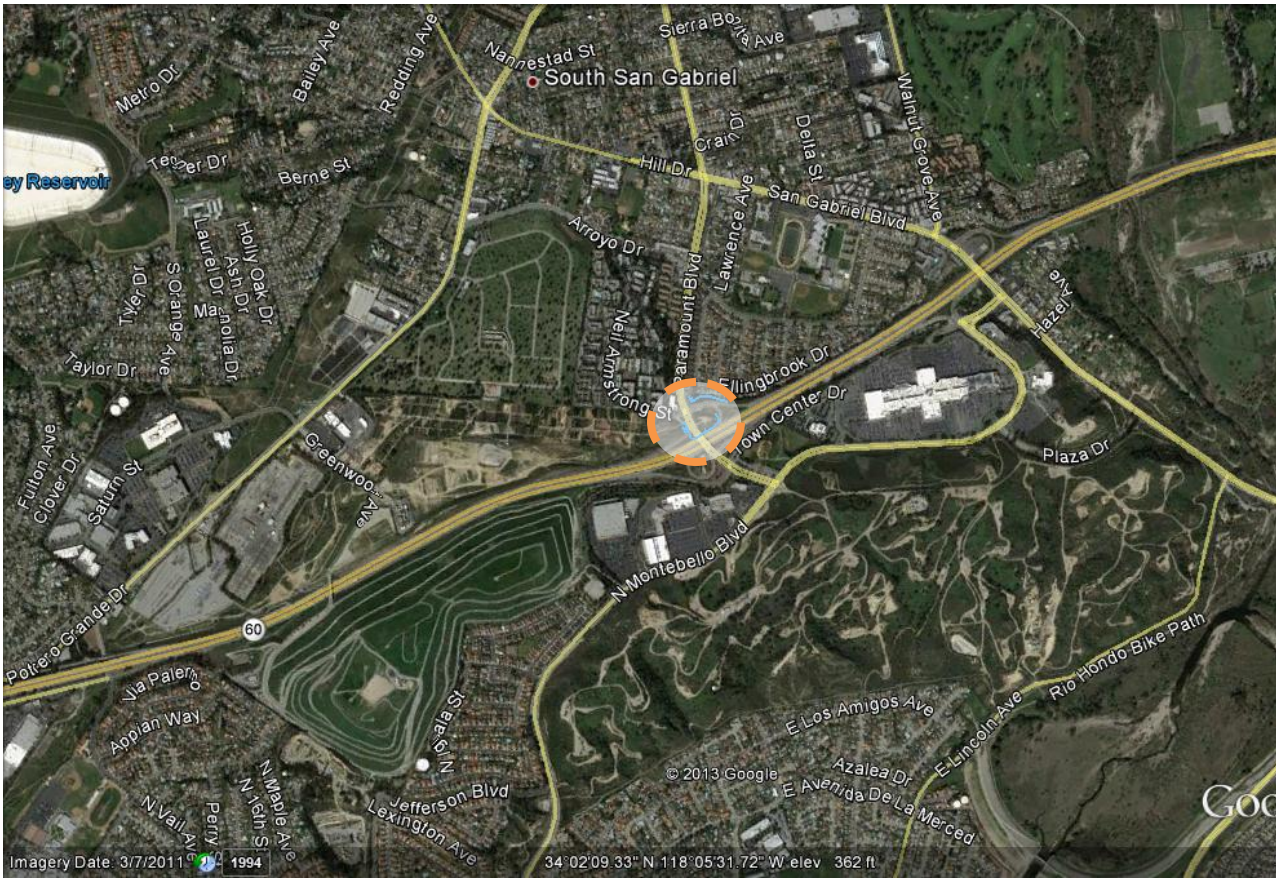

Figure 1: Vicinity map

The purpose of this report is to document subsurface geotechnical conditions, provide the interpretation of engineering parameters for the design of the retaining walls, and recommend the types of the retaining wall, associated foundation, and constructability. This report is intended for use by the project design engineer, construction personnel, bidders and contractors.

Proposed locations and maximum heights of the retaining walls are summarized in the Table 1.

Table 1 - Locations and Heights of Retaining Wall

Retaining Wall	Stationing	Begin Station	End Station	Maximum Wall Height (ft)
1	“C”	187+37	190+49	10
2	"B"	102+14	102+92	9
3	"D"	188+25	190+07	17

2. Existing Site Conditions

Based on 1968 As-Built plans showing ground elevations prior to construction of the Pomona freeway (Hwy 60), the proposed retaining walls are located to the north of Hwy 60 on native soils. The retaining walls will be constructed in both cut and fill slopes underlain by mostly very

dense silty sands and sands with gravel. Retaining Wall 1 will be mostly constructed in fill with a relatively flat backfill and in close proximity to residential properties. Soldier pile walls have been proposed for Retaining Walls 2 and 3 and will most likely be constructed in cut with existing sloped backfills that currently support tower foundations for Southern California Edison.

3. Regional Geology and Seismicity

The project site is in the southern portion of the San Gabriel Valley bound by the Puente and Montebello Hills to the South. It is located within the Transverse Ranges geomorphic province of California. The geologic map of the El Monte and Baldwin park quadrangles, Los Angeles County, California, by Thomas W. Dibblee and Helmut E. Ehrenspeck, Scale 1:24000, indicates that project site is underlain by most likely tertiary nonmarine sandstone and conglomerate (Tfsc).

The project site is located within a seismically active region of southern California. Due to the presence of numerous active or potentially active faults in this region as listed in Table 2, the project site is susceptible to strong earthquake ground motion.

Table 2 - Summary of Adjacent Active and Potentially Active Faults

Fault Name	Fault Type	Max Earthquake Moment Magnitude	Distance to Site (km)
Upper Elysian Park Blind Thrust	Reverse	6.6	4.65
Elsinore Fault Zone (Whittier Section)	Strike Slip	6.9	5.29
Puente Hills (LA)	Reverse	6.9	6.72
Puente Hills (Santa Fe Springs)	Reverse	6.6	8.87
Verdugo-Eagle Rock	Reverse	6.8	9.77

Note: Information is based on the Caltrans 2012 Fault Database.

4. Subsurface Exploration

Three geotechnical borings were completed to depths based on proposed retaining wall heights as of October 30, 2012. Soils were visually classified in accordance with Caltrans' Soil and Rock Logging, Classification, and Presentation Manual (June 2010). Standard Penetration Tests (SPT) in accordance with American Society for Testing and Materials (ASTM) D1586 for SPT and Split-Barrel Sampling of Soils, were performed to estimate in situ density of soils. Soil strength parameters of cohesionless soils were estimated from SPT blow count correlations. A piezometer was installed in Boring R-12-002 and all three borings have been backfilled with a combination of sand, gravel, and bentonite chips. Boring R-11-003, which was drilled on December 23, 2011, in conjunction with the replacement of the Paramount Boulevard Overcrossing, was located near the proposed Retaining Wall 2 and utilized for geotechnical design in this report.

Table 3 - Summary of Soil Exploration Plan

Retaining Wall No.	Boring No.	"CL Rte 60" Station	Offset (ft)	Approx. Top of Boring Elevation (ft)	Approx. Borehole Depth (ft)	Drill Exploration Method	Exploration Equipment
1	A-12-001	187+19	464.1L	353.6	115	Auger/Rotary	CME-85
	R-12-002	189+55	336.7L	346.5	115	Rotary	CME-85
2	R-11-003[1]	186+25	170.7L	369.7	71.5	Rotary	CS-2000
3	A-12-003	189+82	152.8L	343.6	26.5	Auger	CME-85

[1]Boring R-11-003 drilled as part of subsurface exploration program for "Paramount Blvd. OC (Replace)" (2011)

5. Geotechnical Testing

Corrosion Evaluation

Bulk samples were collected during subsurface exploration and tested by Caltrans' Materials laboratory for pH value and minimum electrical resistivity. Based on Caltrans' Corrosion Guidelines (Version 1.0, September 2003), the test results indicate the soils are not corrosive to structure foundation elements.

Table 4 - Corrosion Test Data

Location	Boring Number	Depth of Sample (ft)	Minimum Resistivity (ohm-cm)	pH	Chloride Content (ppm)	Sulfate Content (ppm)
RW1	A-12-001	27.5	3386	7.5	N/A	N/A
RW1	A-12-001	42.5	7722	7.46	N/A	N/A
RW1	R-12-002	2.5	4640	8.08	N/A	N/A
RW2	R-11-003[1]	composite	9300	6.75	N/A	N/A
RW3	A-12-003	7.5	2997	6.69	N/A	N/A

[1]Boring R-11-003 drilled as part of subsurface exploration program for "Paramount Blvd. OC (Replace)" (2011)

Note: Caltrans currently considers a site to be corrosive to foundation elements if one or more of the following conditions exist: Chloride oncentration is greater than or equal to 500 ppm, sulfate concentration is greater than or equal to 2000 ppm, or the pH is 5.5 or less. It is the practice of the caltrans Corrosion Technology Section (with the exceotion of MSE Walls) if the minimum resistivity of the sample is greater than 1000 ohm-cm and the pH is greater than 5.5, the sample is considered to be non-corrosive.

6. Geotechnical Conditions

The subsurface condition for the retaining walls generally consists of mostly medium dense to very dense silty sands and sands with gravel. A loose layer of silt sand (less than 5 feet) was encountered at an elevation, 335 feet at boring R-12-002 of the retaining wall No. 1.

Interpreted engineering parameters are summarized in the Table 5. Note that zero cohesion is assumed for sandy soils, although an apparent cohesion may exist.

Table 5 - Idealized Soil Profile and Strength Parameters

Approximate Elevation	Predominant Soil Type, USCS	Total Unit Weight (pcf)	Effective Unit Weight (pcf)	Apparent Effective Friction Angle (degrees)	Earth Coefficients (Ka/ Kp)
Retaining Wall No. 1					
+345' to +330'	SM	120	120	31	Note 1
+330' to +318'	SW/SM	125	125	36	Note 1
+318' to +283'	SW/SM	125	62.6	40	Note 1
+283' to +268'	SP/SM	125	62.6	40	Note 1
+268' to +230'	SW/SM	125	62.6	40	Note 1
Retaining Wall No. 2					
+370' to +337'	SM	125	125	37	Note 1
+337' to +318'	SM	125	125	40	Note 1
+318' to +299'	SM	125	62.6	40	Note 1
Retaining Wall No. 3					
+344' to +336'	SM	125	125	38	Note 1
+336' to +318'	SW/SM	125	125	37	Note 1

Note:

1. **Earth coefficients should be estimated based on effective soil parameters above and ground slope angle on the top of the wall.**
2. **Design groundwater elevation, 318 feet, should be used for the wall design, whenever it is applicable.**

Groundwater

Hollow stem auger and rotary wash method were used for subsurface exploration with a piezometer installed at boring R-12-002 for groundwater monitoring. Groundwater was measured at 40 feet below ground surface (approximate elevation 346.5 feet) on December 7, 2012. According to records from the State Water Resources Control Board GeoTracker tool, several monitoring wells were installed at the Chevron Gas Station approximately 400 feet north of the project site and reported the highest groundwater table at elevation 309 (NAVD88) feet between October 2003 and March 2009.

During subsurface exploration for the original Paramount Boulevard overcrossing construction in October 1965, the borehole approximately 400 feet south of the current project site was drilled down to elevation 297 feet (NGVD29) and did not encounter water. However, during the June 1967 construction drilling period, water was encountered at the same location at elevation 315 feet (NGVD29). Therefore, for the design of the new retaining walls, the groundwater table is

conservatively assumed to be at 318 feet, the recorded highest groundwater table during construction for the original bridge, after vertical datum conversion to NAVD88.

Liquefaction

Soil liquefaction is a phenomenon is which saturated, predominately granular loose to medium dense soils lost most, if not all, of shear strength and stiffness due to the development of excess porewater pressure when subjected to ground motion. Occurrence of the following three conditions can trigger liquefaction: (1) presence of loose, contractive soils, (2) soil saturation and (3) high intensity ground motion. Effects of liquefaction on ground surface include foundation settlement and reduction in bearing capacity, sand boils and ground settlement, and lateral spreading.

Based on the Department of Conservation's Division of Mines and Geology, Seismic Hazard Zones Map, the project site is not located within an area requiring further investigation due to historic occurrences of liquefaction or a potential for permanent ground displacements. Based on current subsurface information and the groundwater data mentioned above, soils below the historical high groundwater table are very dense silty sands and sands with gravel. Therefore, liquefaction potential is low and potential for hazard due to liquefaction is negligible.

Ground Rupture

No known major faults traverse the project site according to the Fault Activity Map of California (2010). East of the project site lays the East Montebello Fault, a fault considered to have been active during Holecene time and to have a relatively high potential for surface rupture according to the California Department of Conservation's Alquist-Priolo Earthquake Fault Zone Map of the El Monte Quadrangle (1991). The project site is approximately one mile from the fault trace, thus making the potential for ground rupture at the project site negligible.

Ground Motion

A seismic hazard analysis was performed to develop the design ground motion parameters, including the Acceleration Response Spectrum (ARS) for structure design. The analysis was performed in accordance with Caltrans' 2009 Geotechnical Services Design Manual Version 1.0. The "Caltrans ARS Online (v2.0.4)" web tool was used to evaluate deterministic, probabilistic (5% probability of exceedance in 50 years) and the design ground motion as defined in the SDC.

The average small strain shear wave velocity V_{s30} for the upper 30 meters (100 feet) of the profile is required to determine the design ground motion. The shear wave velocity V_{s30} was estimated using correlations between shear wave velocity and SPT N-values. In the upper 30 meters, the project site is underlain by mostly Type D soil profile types with an average shear wave velocity V_{s30} of 300 m/sec, which was used for the seismic hazard analysis.

The probabilistic method controls over the deterministic method in the design ground motion at this site. The Peak Ground Acceleration (PGA) at the project site is expected to be 0.72g.

7. Geotechnical Analysis and Design

Based on the subsurface condition encountered at the wall locations and proposed wall heights, global slope stability should have a factor of safety of greater than 1.3.

8. Geotechnical Recommendations

Based on the subsurface condition encountered at the wall locations and proposed wall heights, following is our recommendation for the proposed retaining wall locations.

Retaining Wall No. 1

Considering a maximum wall height of about 10 feet, newly placed fill over the existing embankment (less than 5 feet) , and sandy material encountered at the site, the Retaining Wall Type 1 shown on the 2010 Revised Standard Plans B3-1A can be used for this location.

The retaining wall will be constructed on the existing sloped embankment. The foundation material should be over-excavated at least 3 feet below the bottom of footing, and horizontally extended to the face of the existing sloped embankment. The over-excavated areas should be back-filled with the structural fill, and compacted to at least 95 % relative compaction.

Retaining wall footing should be embedded a sufficient depth to provide adequate bearing and/or erosion protection. A minimum footing embedment of 2 feet, measured to the top of the footing, should be maintained. The slope of embankment in front of wall should be graded to be flatter than 2 to 1 (H:V).

Cantilever Soldier Pile Wall can be also used for this wall. However, extra cautions should be applied to compaction of materials behind of wall panel, in order not to overstress the panel and appropriate compaction requirement.

Retaining Wall No. 2

Considering that the wall will be constructed by cutting into existing slope and its maximum height is about 6 feet, cantilever soldier pile walls can be used for Retaining Wall No. 2. The retaining wall will be constructed adjacent to traffic, and foundation elements will be constructed in dense native soils. Due to a minimal axial capacity demand, a pile length should be designed by Structure Design to provide sufficient factor of safety for lateral stability wall.

Retaining Wall No. 3

Considering that the wall will be constructed by cutting into existing slope and its maximum height is about 14 feet, cantilever soldier pile walls can be used for Retaining Wall No. 3. The retaining wall will be constructed adjacent to westbound Highway 60 cloverleaf onramp traffic, and foundation elements will be constructed in dense native soils. Due to a minimal axial capacity demand, a pile length should be designed by Structure Design to provide sufficient factor of safety for lateral stability wall.

9. Construction Considerations

Although subsurface materials typically consist of dense to very dense silt sands, when a hole is drilled for the construction of the wall, a caving should be anticipated due to typical characteristics of sandy soils, and presence of gravel and sporadic medium dense sand.

Based on preliminary information regarding newly planned and exiting overhead power lines, the construction of Retaining Wall No. 3 will not affect the proposed overhead power lines. We also understand that deep foundation will be used to support the power lines.

REGISTERED PROFESSIONAL ENGINEER
Seungwoon Han
No. 73527
Exp. 12/31/2014
CIVIL
STATE OF CALIFORNIA

Seungwoon Han, Ph.D, P.E.
Transportation Engineer-Civil
Branch A

Cc: Deh-Jeng Jang Ph.D, G.E., P.E.