DIST	COUNTY	ROUTE	POST MILES TOTAL PROJECT	SHEET No.	TOTAL SHEETS
07	LA	138	44.9	1	57

INDEX OF PLANS

SHEET No.	DESCRIPTION
1	TITLE SHEET
2	LAYOUT PLAN
3-6	CONSTRUCTION DETAILS
7	UTILITY PLAN
8	CONSTRUCTION AREA SIGNS
9	TRAFFIC HANDLING PLAN
10	PAVEMENT DELINEATION AND SIGN PLAN
11-12	SIGN DETAIL AND QUANTITIES
13	SUMMARY OF QUANTITIES
14-17	ELECTRICAL PLAN, DETAILS AND QUANTITIES
18-57	REVISED STANDARD PLANS

THE STANDARD PLANS LIST APPLICABLE TO THIS CONTRACT IS INCLUDED IN THE NOTICE TO CONTRACTORS AND SPECIAL PROVISIONS BOOK .

STATE OF CALIFORNIA

DEPARTMENT OF TRANSPORTATION

PROJECT PLANS FOR CONSTRUCTION ON

STATE HIGHWAY

IN LOS ANGELES COUNTY
IN PALMDALE
AT PALMDALE BOULEVARD AND 12TH STREET EAST

TO BE SUPPLEMENTED BY STANDARD PLANS DATED 2010

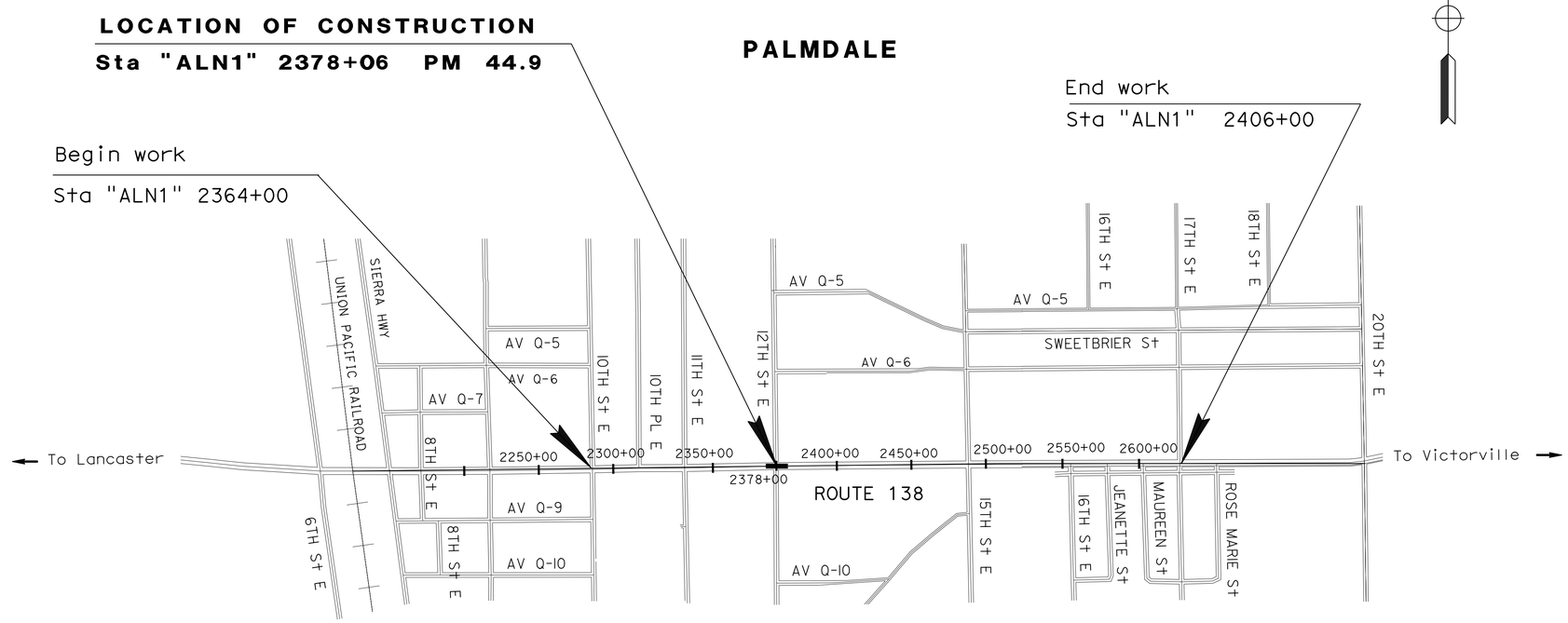

NO SCALE

THE CONTRACTOR SHALL POSSESS THE CLASS (OR CLASSES) OF LICENSE AS SPECIFIED IN THE "NOTICE TO BIDDERS."

PROJECT MANAGER ERIC WANG

DESIGN MANAGER YI TSAU

Jesse Ruelas 2-22-16
PROJECT ENGINEER DATE
REGISTERED ELECTRICAL ENGINEER

March 28, 2016
PLANS APPROVAL DATE

REGISTERED PROFESSIONAL ENGINEER JESSE RUELAS No. E015604 Exp. 12/31/17 ELECT STATE OF CALIFORNIA

THE STATE OF CALIFORNIA OR ITS OFFICERS OR AGENTS SHALL NOT BE RESPONSIBLE FOR THE ACCURACY OR COMPLETENESS OF SCANNED COPIES OF THIS PLAN SHEET.

CONTRACT No.	07-4P0204
PROJECT ID	0715000181

LAST REVISION 00-00-00 DATE PLOTTED => 18-MAR-2016 TIME PLOTTED => 10:18

Dist	COUNTY	ROUTE	POST MILES TOTAL PROJECT	SHEET No.	TOTAL SHEETS
07	LA	138	44.9	2	57

Jennifer Nguyen 2/22/16
REGISTERED CIVIL ENGINEER DATE

3-28-16
PLANS APPROVAL DATE

REGISTERED PROFESSIONAL ENGINEER JENNIFER NGUYEN No. C65953 Exp.6/30/16 CIVIL STATE OF CALIFORNIA

THE STATE OF CALIFORNIA OR ITS OFFICERS OR AGENTS SHALL NOT BE RESPONSIBLE FOR THE ACCURACY OR COMPLETENESS OF SCANNED COPIES OF THIS PLAN SHEET.

NOTES:

FOR ACCURATE RIGHT OF WAY DATA, CONTACT
RIGHT OF WAY ENGINEERING AT THE DISTRICT OFFICE.

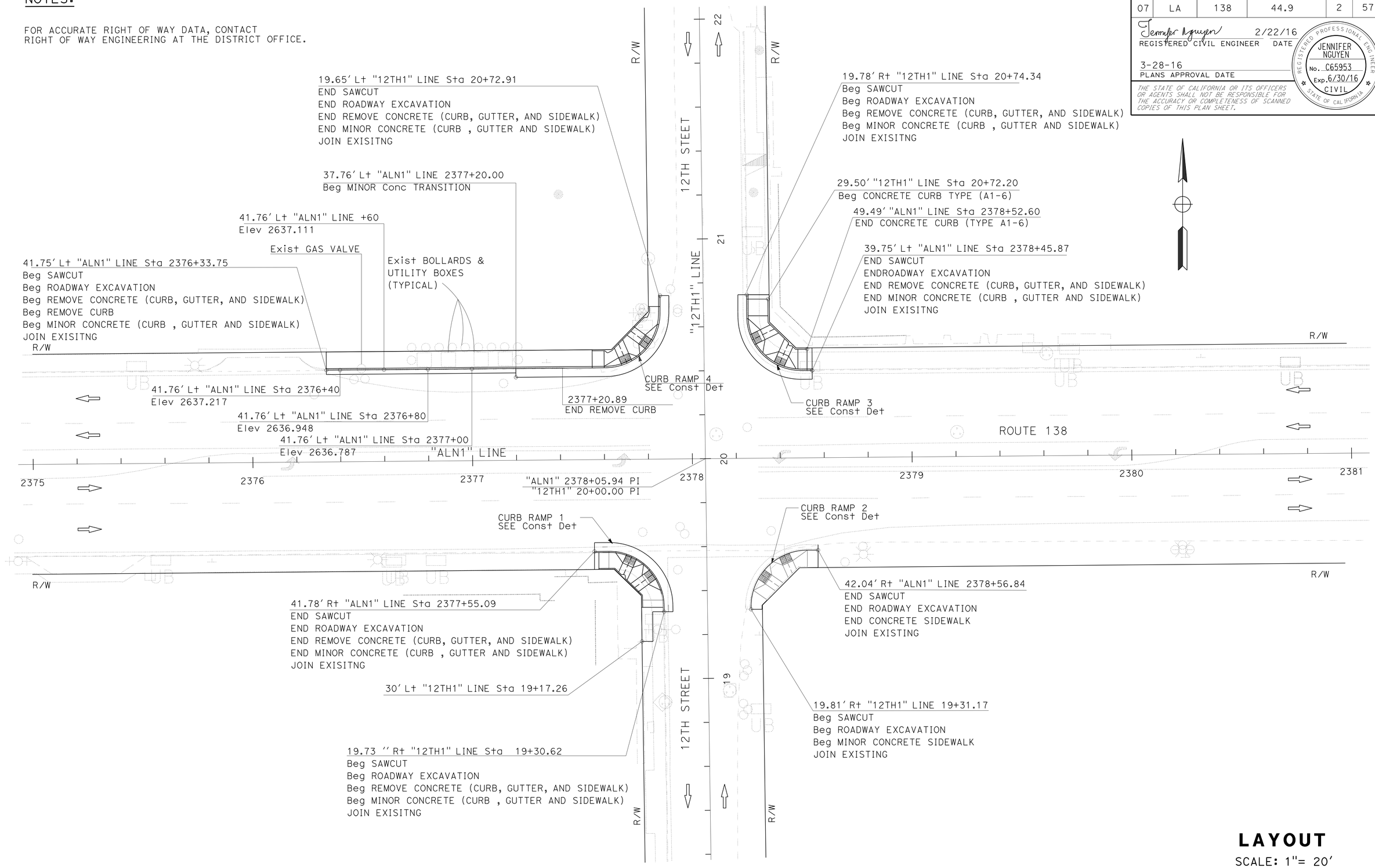

LAYOUT
SCALE: 1"= 20′

L-1

REVISED BY | DATE REVISED
EUGENE BRAVO | JENNIFER L NGUYEN
CALCULATED-DESIGNED BY | CHECKED BY
FUNCTIONAL SUPERVISOR: GRISH BIGLARIAN
STATE OF CALIFORNIA - DEPARTMENT OF TRANSPORTATION
Caltrans
TRAFFIC DESIGN

S:\design\4p0201\traffic\Traffic Civil\100% REVISED PLANS Feb 16, 2016\74p020ea001.dgn

LAST REVISION 00-00-00 | DATE PLOTTED => 18-MAR-2016 | TIME PLOTTED => 10:18

Dist	COUNTY	ROUTE	POST MILES TOTAL PROJECT	SHEET No.	TOTAL SHEETS
07	LA	138	44.9	3	57

Jennifer Nguyen 2/22/16
REGISTERED CIVIL ENGINEER DATE

3-28-16
PLANS APPROVAL DATE

REGISTERED PROFESSIONAL ENGINEER
JENNIFER NGUYEN
No. C65953
Exp. 6/30/16
CIVIL
STATE OF CALIFORNIA

THE STATE OF CALIFORNIA OR ITS OFFICERS OR AGENTS SHALL NOT BE RESPONSIBLE FOR THE ACCURACY OR COMPLETENESS OF SCANNED COPIES OF THIS PLAN SHEET.

NOTES:

1. FOR ACCURATE RIGHT OF WAY DATA, CONTACT RIGHT OF WAY ENGINEERING AT THE DISTRICT OFFICE.
2. SIDEWALK AND RAMP THICKNESS, T = 4".
3. SAW CUT THE PAVEMENT WITH EXACT DIMENSION OF THE CURB & GUTTER (GUTTER FLOW LINE). DO NOT OVER EXCAVATE OF THE ADJACENT PAVEMENT SECTION WHEN CURB & GUTTER AND CURB RAMP ARE CONSTRUCTED.
4. SIDEWALK AND RAMP MUST MATCH EXISTING COLOR AND TEXTURE, AND MUST BE PRE-APPROVED BY THE ENGINEER.
5. FOR DETAILS NOT SHOWN, SEE REVISED STANDARD PLANS A87A AND A88A.

CURVE DATA

No. ⊕	R	Δ	T	L
1	25′	87°39′28"	24.00′	38.25′

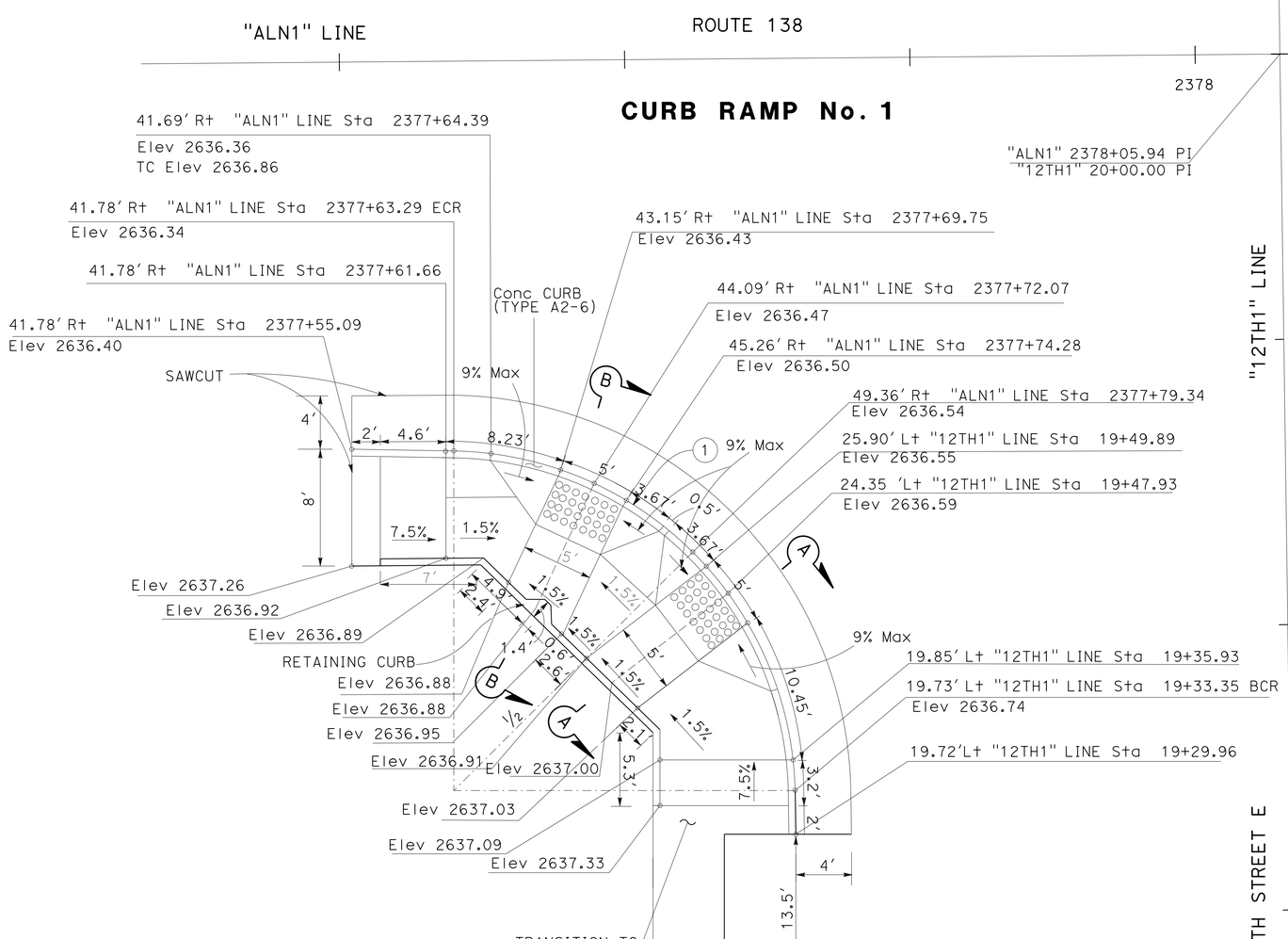

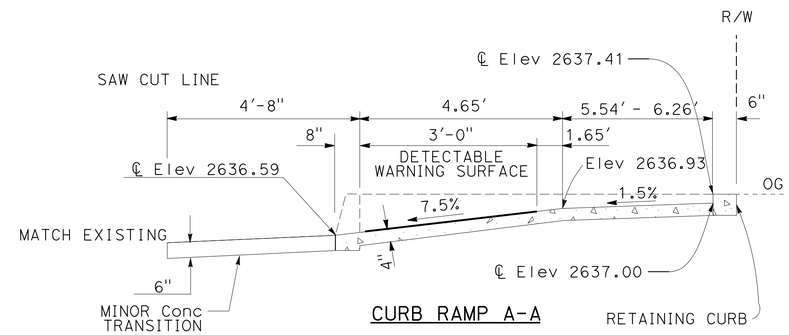

CURB RAMP A-A

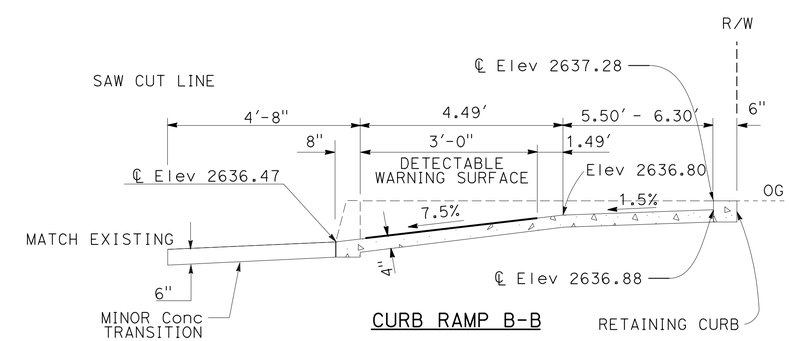

CURB RAMP B-B

CONSTRUCTION DETAILS

NO SCALE

C-1

STATE OF CALIFORNIA - DEPARTMENT OF TRANSPORTATION
Caltrans® TRAFFIC DESIGN

FUNCTIONAL SUPERVISOR: GRISH BIGLARIAN
CALCULATED-DESIGNED BY: EUGENE BRAVO
CHECKED BY: JENNIFER L NGUYEN
REVISED BY
DATE REVISED

LAST REVISION 00-00-00
DATE PLOTTED => 18-MAR-2016
TIME PLOTTED => 10:18

Dist	COUNTY	ROUTE	POST MILES TOTAL PROJECT	SHEET No.	TOTAL SHEETS
07	LA	138	44.9	4	57

REGISTERED CIVIL ENGINEER Jennifer Nguyen 2/22/16 DATE

3-28-16
PLANS APPROVAL DATE

REGISTERED PROFESSIONAL ENGINEER JENNIFER NGUYEN No. C65953 Exp. 6/30/16 CIVIL STATE OF CALIFORNIA

THE STATE OF CALIFORNIA OR ITS OFFICERS OR AGENTS SHALL NOT BE RESPONSIBLE FOR THE ACCURACY OR COMPLETENESS OF SCANNED COPIES OF THIS PLAN SHEET.

CURVE DATA

No. ⊕	R	Δ	T	L
2	26′	90°23′37"	25.90′	40.58′

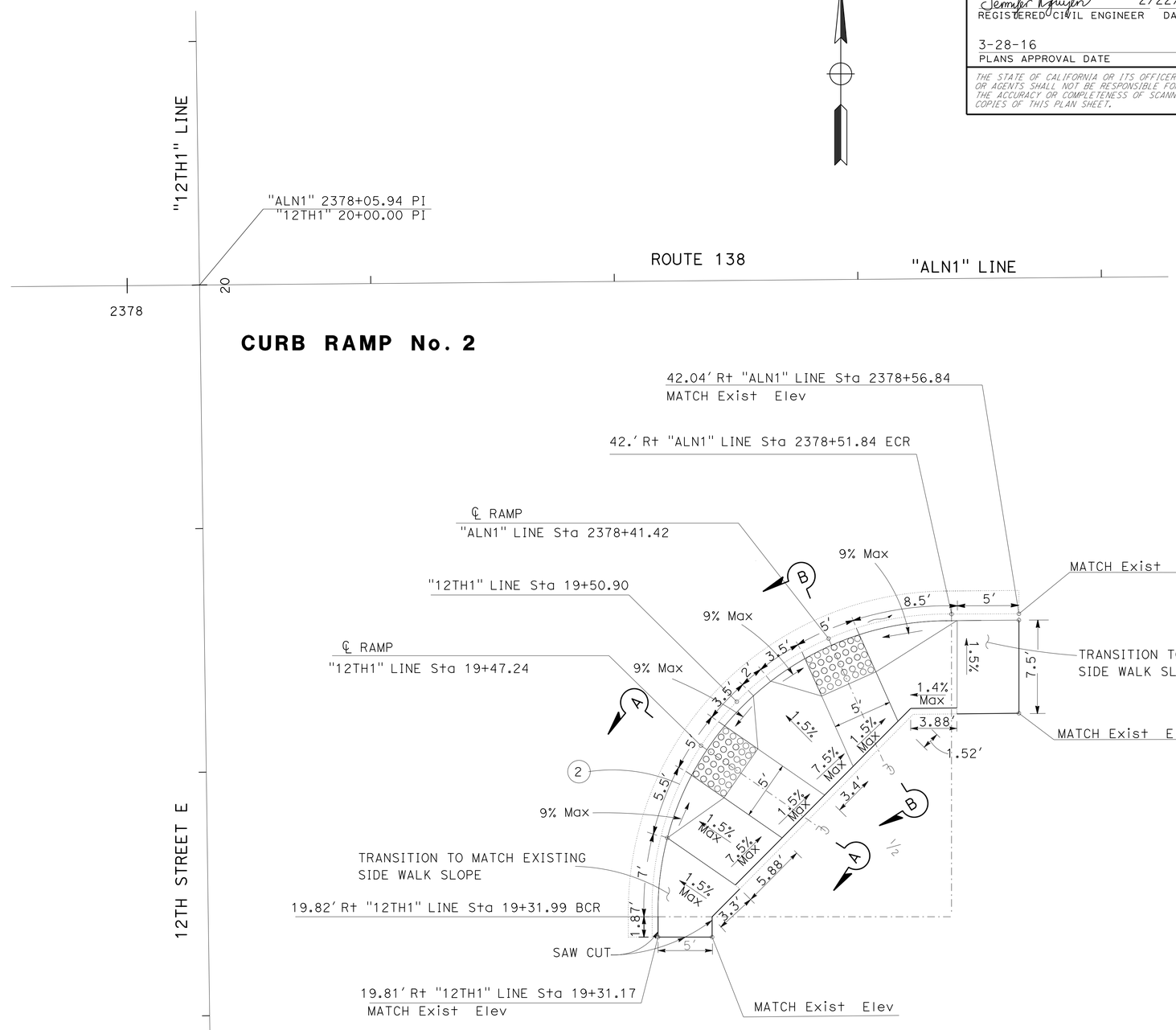

CURB RAMP No. 2

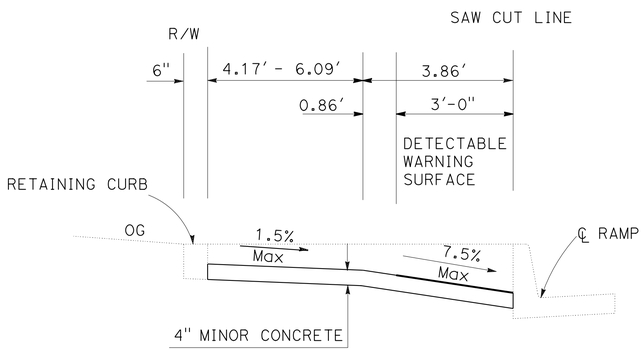

SECTION B-B

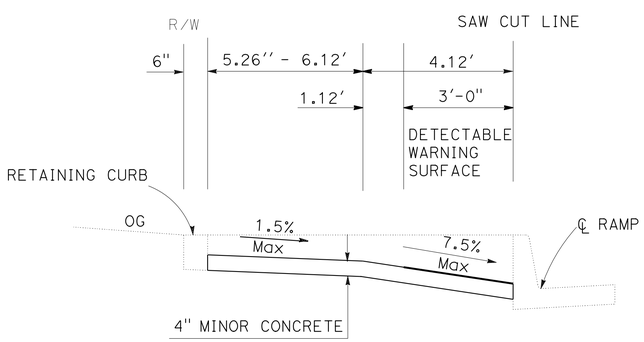

SECTION A-A

CONSTRUCTION DETAILS

NO SCALE

C-2

STATE OF CALIFORNIA - DEPARTMENT OF TRANSPORTATION
Caltrans® TRAFFIC DESIGN

EUGENE BRAVO | JENNIFER L NGUYEN | GRISH BIGLARIAN | REVISED BY | DATE REVISED | CALCULATED-DESIGNED BY | CHECKED BY | FUNCTIONAL SUPERVISOR

S:\desig\4p0201\traffic\Traffic Civil\100% REVISED PLANS Feb 16, 2016\74p020ga002.dgn

LAST REVISION 00-00-00 | DATE PLOTTED => 18-MAR-2016 | TIME PLOTTED => 10:18

Dist	COUNTY	ROUTE	POST MILES TOTAL PROJECT	SHEET No.	TOTAL SHEETS
07	LA	138	44.9	5	57

Jennifer Nguyen 2/22/16
REGISTERED CIVIL ENGINEER DATE

3-28-16
PLANS APPROVAL DATE

REGISTERED PROFESSIONAL ENGINEER JENNIFER NGUYEN No. C65953 Exp.6/30/16 CIVIL STATE OF CALIFORNIA

THE STATE OF CALIFORNIA OR ITS OFFICERS OR AGENTS SHALL NOT BE RESPONSIBLE FOR THE ACCURACY OR COMPLETENESS OF SCANNED COPIES OF THIS PLAN SHEET.

CURVE DATA

No. ⊕	R	Δ	T	L
3	25′	89°24′27″	24.49′	38.61′

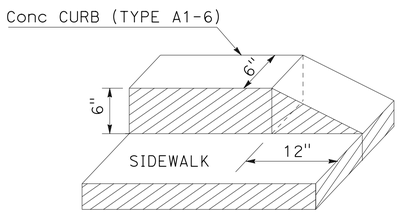

DETAIL A

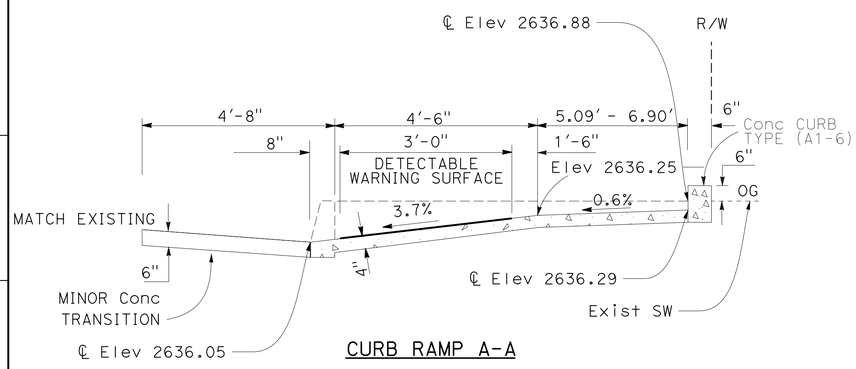

CURB RAMP A-A

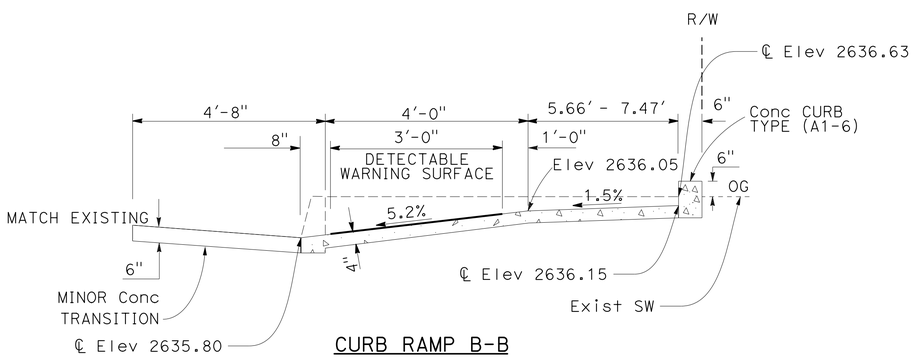

CURB RAMP B-B

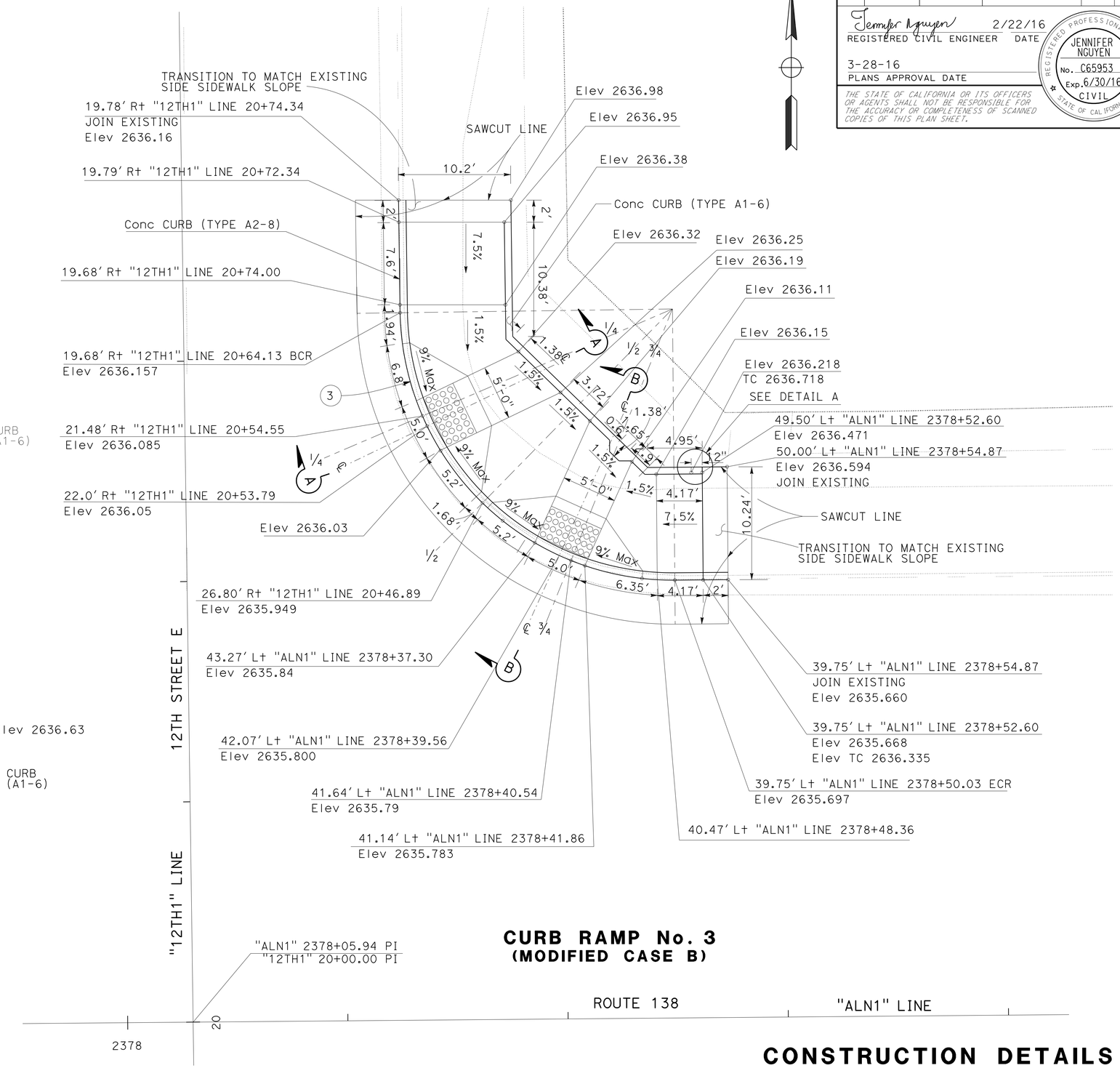

CURB RAMP No. 3
(MODIFIED CASE B)

CONSTRUCTION DETAILS

NO SCALE

C-3

STATE OF CALIFORNIA - DEPARTMENT OF TRANSPORTATION
Caltrans
TRAFFIC DESIGN

FUNCTIONAL SUPERVISOR: GRISH BIGLARIAN
CALCULATED-DESIGNED BY: EUGENE BRAVO
CHECKED BY: JENNIFER L NGUYEN
REVISED BY
DATE REVISED

LAST REVISION 00-00-00
DATE PLOTTED => 18-MAR-2016
TIME PLOTTED => 10:18

Dist	COUNTY	ROUTE	POST MILES TOTAL PROJECT	SHEET No.	TOTAL SHEETS
07	LA	138	44.9	6	57

Jennifer Nguyen 2/22/16
REGISTERED CIVIL ENGINEER DATE

3-28-16
PLANS APPROVAL DATE

REGISTERED PROFESSIONAL ENGINEER JENNIFER NGUYEN No. C65953 Exp.6/30/16 CIVIL STATE OF CALIFORNIA

THE STATE OF CALIFORNIA OR ITS OFFICERS OR AGENTS SHALL NOT BE RESPONSIBLE FOR THE ACCURACY OR COMPLETENESS OF SCANNED COPIES OF THIS PLAN SHEET.

CURVE DATA

No. ⊕	R	Δ	T	L
4	25′	90°58′12″	25.43′	39.69′

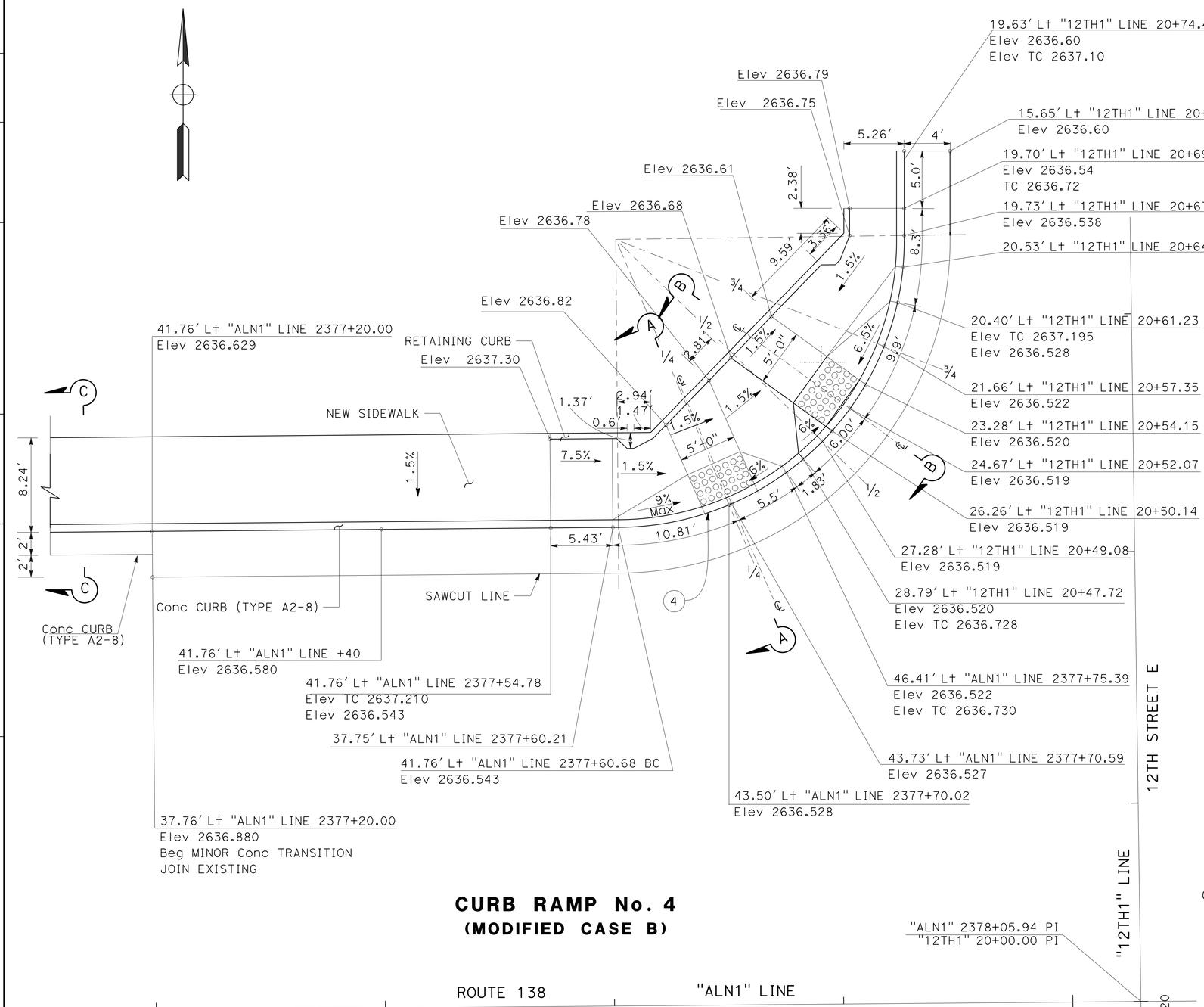

CURB RAMP No. 4
(MODIFIED CASE B)

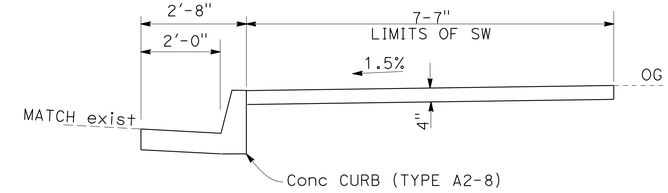

SIDEWALK C-C

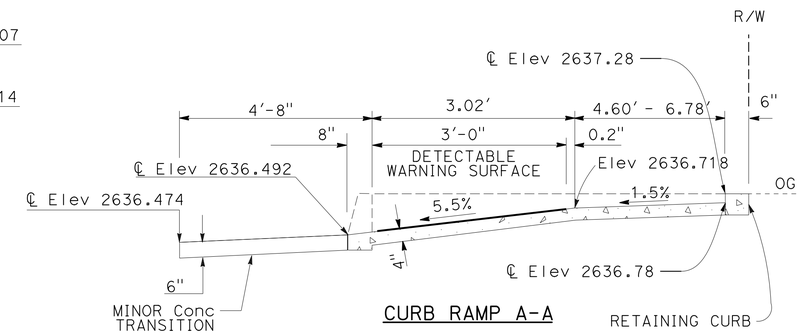

CURB RAMP A-A

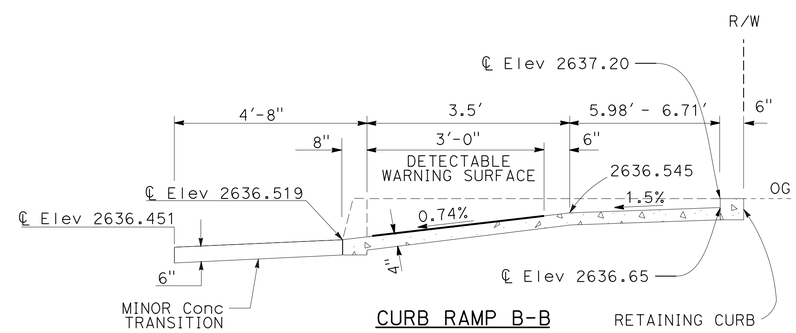

CURB RAMP B-B

CONSTRUCTION DETAILS

NO SCALE

C-4

STATE OF CALIFORNIA - DEPARTMENT OF TRANSPORTATION
Caltrans® TRAFFIC DESIGN
FUNCTIONAL SUPERVISOR: GRISH BIGLARIAN
CALCULATED-DESIGNED BY: EUGENE BRAVO
CHECKED BY: JENNIFER L NGUYEN
REVISED BY / DATE REVISED

LAST REVISION 00-00-00 | DATE PLOTTED => 18-MAR-2016 | TIME PLOTTED => 10:18

Dist	COUNTY	ROUTE	POST MILES TOTAL PROJECT	SHEET No.	TOTAL SHEETS
07	LA	138	44.9	7	57

REGISTERED CIVIL ENGINEER 2/22/16 DATE

3-28-16
PLANS APPROVAL DATE

REGISTERED PROFESSIONAL ENGINEER DON TRONG LUU No. C62286 Exp. 09/30/17 CIVIL STATE OF CALIFORNIA

THE STATE OF CALIFORNIA OR ITS OFFICERS OR AGENTS SHALL NOT BE RESPONSIBLE FOR THE ACCURACY OR COMPLETENESS OF SCANNED COPIES OF THIS PLAN SHEET.

POTHOLDING INFORMATION TABLE

	UTILITY COMPANY	NORTHING	EASTING	GROUND ELEVATION	DEPTH
1	6"H STL SCG	2033366.5	6529263.8	2636.6	4′
2	4"M SCG	2033396.7	6529328.0	2636.4	3.5′
3	4" SCG	2033338.9	6529361.7	2636.6	3.41′
4	4" SCG	2033337.5	6529262.6	2637.3	3.70′
5	6" SCG	2033306.1	6529365.8	2636.5	3.82′
6	12" DIP PWD	2033394.3	6529304.0	2636.6	3.30′
7	12" DIP PWD	2033391.7	6529367.3	2636.1	3.45′

ABBREVIATIONS

H - HIGH PRESSURE
DU - DUCT
M - MEDIUM PRESSURE
SL - STREET LIGHT
STL - STEEL
BUR CA - BURIED CABLE
POTHOLE LOCATION

PWD - PALMDALE WATER DISTRICT
PAC BELL - PACIFIC BELL
LACSD - LOS ANGELES COUNTY SANITATION DISTRICT
SCE - SOUTHERN CALIFORNIA EDISON
SCG - SOUTHERN CALIFORNIA GAS
LRCID - LITTLEROCK CREEK IRRIGATION DISTRICT
COP - CITY OF PALMDALE SEWER

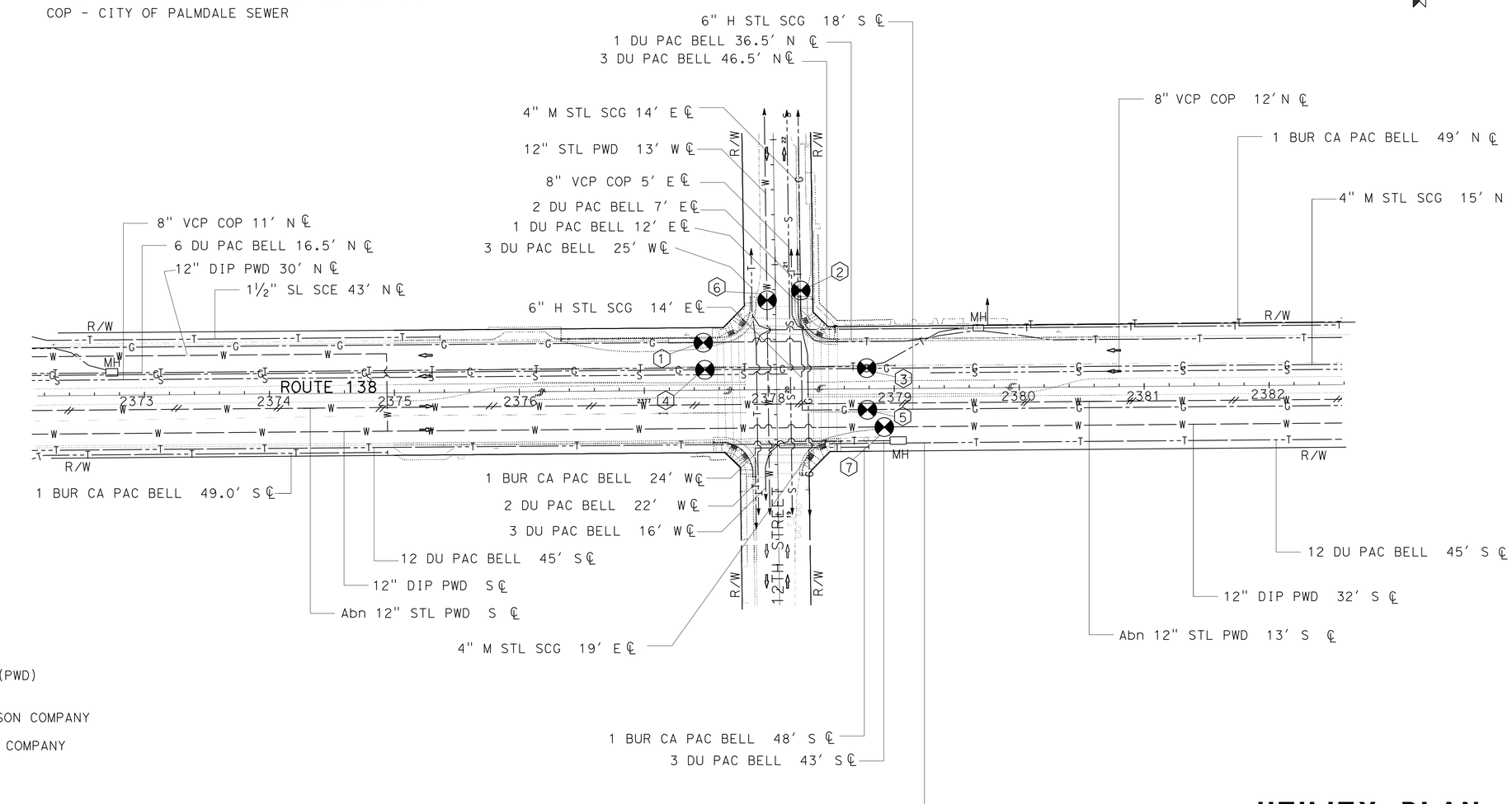

UTILITY OWNERSHIP

WATER	PALMDALE WATER DISTRICT(PWD)
TELEPHONE	PAC BELL
POWER	SOUTHERN CALIFORNIA EDISON COMPANY
GAS	SOUTHERN CALIFORNIA GAS COMPANY
SEWER	CITY OF PALMDALE(COP)

APPROVED FOR UTILITY INFORMATION ONLY

UTILITY PLAN

SCALE: 1" = 50′

U-1

STATE OF CALIFORNIA - DEPARTMENT OF TRANSPORTATION
Caltrans PROJECT DEVELOPMENT

FUNCTIONAL SUPERVISOR: CELINA AVILES
CALCULATED-DESIGNED BY: DON LUU
CHECKED BY: HOSSAIN KIAN
REVISED BY
DATE REVISED

LAST REVISION 00-00-00
DATE PLOTTED => 11-APR-2016
TIME PLOTTED => 07:38

Dist	COUNTY	ROUTE	POST MILES TOTAL PROJECT	SHEET No.	TOTAL SHEETS
07	LA	138	44.9	8	57

Jennifer Nguyen 2/22/16
REGISTERED CIVIL ENGINEER DATE

3-28-16
PLANS APPROVAL DATE

REGISTERED PROFESSIONAL ENGINEER
JENNIFER NGUYEN
No. C65953
Exp. 6/30/16
CIVIL
STATE OF CALIFORNIA

THE STATE OF CALIFORNIA OR ITS OFFICERS OR AGENTS SHALL NOT BE RESPONSIBLE FOR THE ACCURACY OR COMPLETENESS OF SCANNED COPIES OF THIS PLAN SHEET.

NOTES:

1. LOCATIONS OF CONSTRUCTION AREA SIGNS SHOWN ARE APPROXIMATE. EXACT LOCATIONS MUST BE DETERMINED BY THE ENGINEER.

STATIONARY MOUNTED CONSTRUCTION AREA SIGNS

SIGN No. (X)	SIGN CODE		PANEL SIZE	SIGN MESSAGE	NUMBER OF POSTS AND SIZE	NUMBER OF SIGNS
	FEDERAL	CALIFORNIA				
(A)	W20-1		36" x 36"	ROAD WORK AHEAD	1 - 4" x 6"	4
(B)	G20-2		36" x 18"	END ROAD WORK	1 - 4" x 4"	4
(C)		C40(CA)	72" x 36"	TRAFFIC FINES DOUBLED IN CONSTRUCTION ZONES	2 - 6" x 6"	2
					TOTAL	10

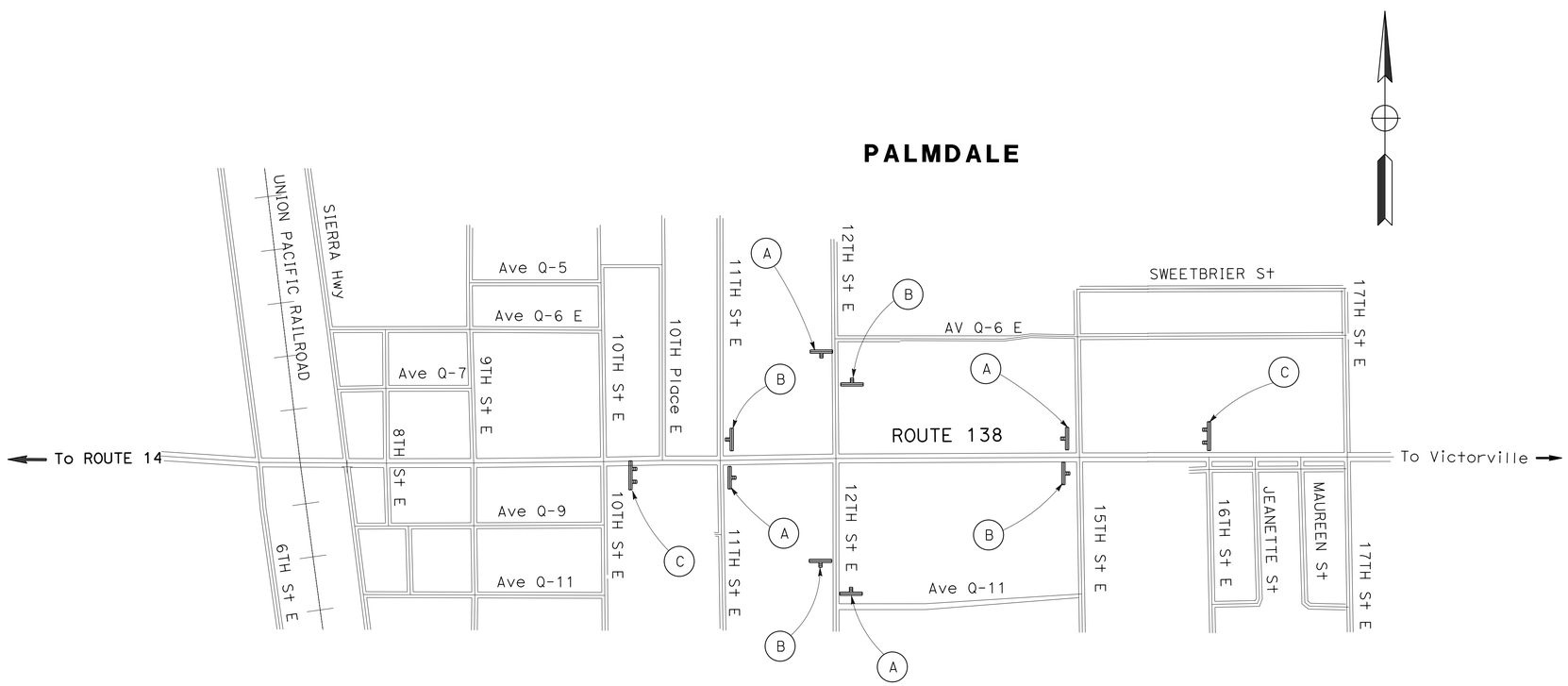

CONSTRUCTION AREA SIGNS

NO SCALE

APPROVED FOR CONSTRUCTION AREA SIGN WORK ONLY

CS-1

STATE OF CALIFORNIA - DEPARTMENT OF TRANSPORTATION
Caltrans® TRAFFIC DESIGN

FUNCTIONAL SUPERVISOR: GRISH BIGLARIAN
CALCULATED-DESIGNED BY: EUGENE BRAVO
CHECKED BY: JENNIFER L NGUYEN
REVISED BY
DATE REVISED

LAST REVISION 00-00-00
DATE PLOTTED => 18-MAR-2016
TIME PLOTTED => 10:18

Dist	COUNTY	ROUTE	POST MILES TOTAL PROJECT	SHEET No.	TOTAL SHEETS
07	LA	138	44.9	9	57

Jennifer Nguyen 2/22/16
REGISTERED CIVIL ENGINEER DATE

3-28-16
PLANS APPROVAL DATE

REGISTERED PROFESSIONAL ENGINEER
JENNIFER NGUYEN
No. C65953
Exp. 6/30/16
CIVIL
STATE OF CALIFORNIA

THE STATE OF CALIFORNIA OR ITS OFFICERS OR AGENTS SHALL NOT BE RESPONSIBLE FOR THE ACCURACY OR COMPLETENESS OF SCANNED COPIES OF THIS PLAN SHEET.

NOTES:

1. LOCATIONS OF PEDESTRIAN CROSS SIGNS SHOWN ARE APPROXIMATE. EXACT LOCATIONS MUST BE DETERMINED BY THE ENGINEER.
2. PEDESTRIANS ACCESS SIGNS ARE MOUNTED ON TYPE II BARRICADES.
3. PEDESTRIAN CROSSING MUST BE ACCESSIBLE AT ALL TIMES DURING CONSTRUCTION.

LEGEND:

TYPE II BARRICADE

TRAFFIC HANDLING QUANTITIES
PEDESTRIAN SIGNS

SIGN No. (X)	SIGN CODE FEDERAL	PANEL SIZE	SIGN MESSAGE	SIGNS EA	TYPE II BARRICADE EA
(A)	R9-9	24" x 12"	SIDEWALK CLOSED	8	8
(B)	R9-11	24" x 18"	SIDEWALK CLOSED AHEAD CROSS HERE	8	8
TOTAL				16	16

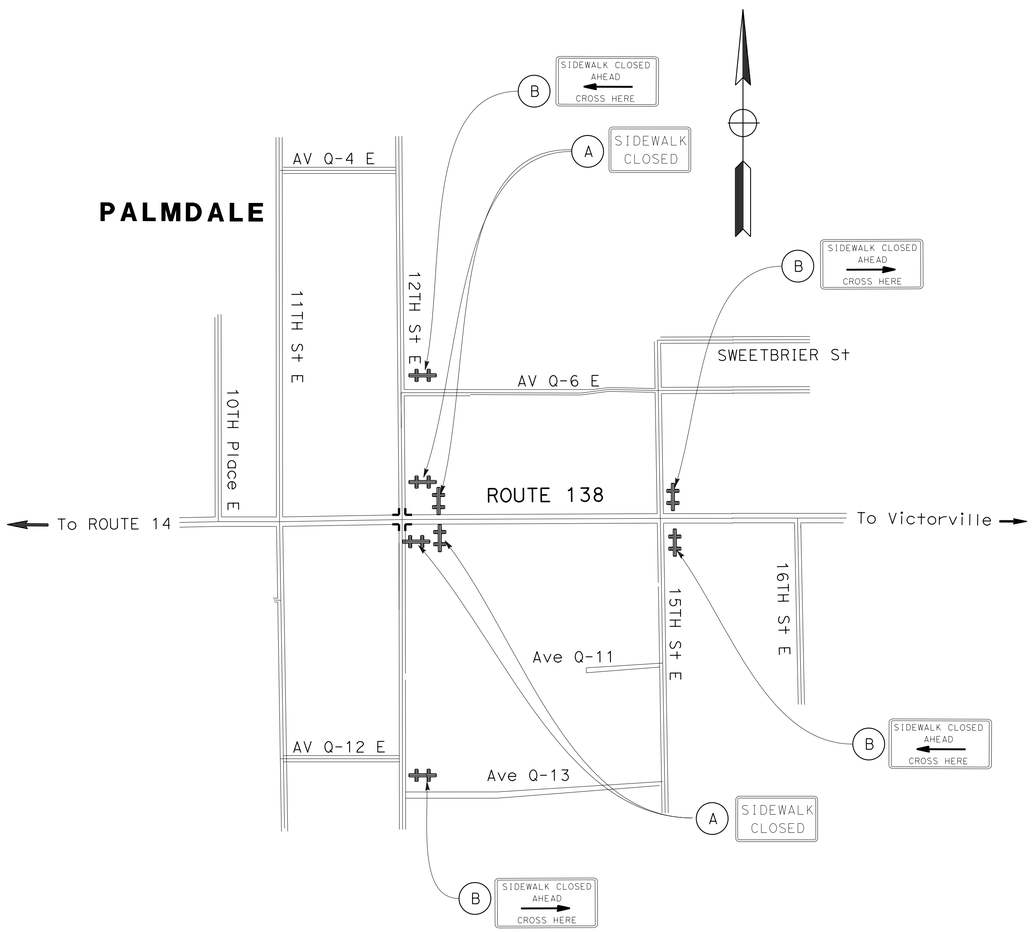

STAGE 1

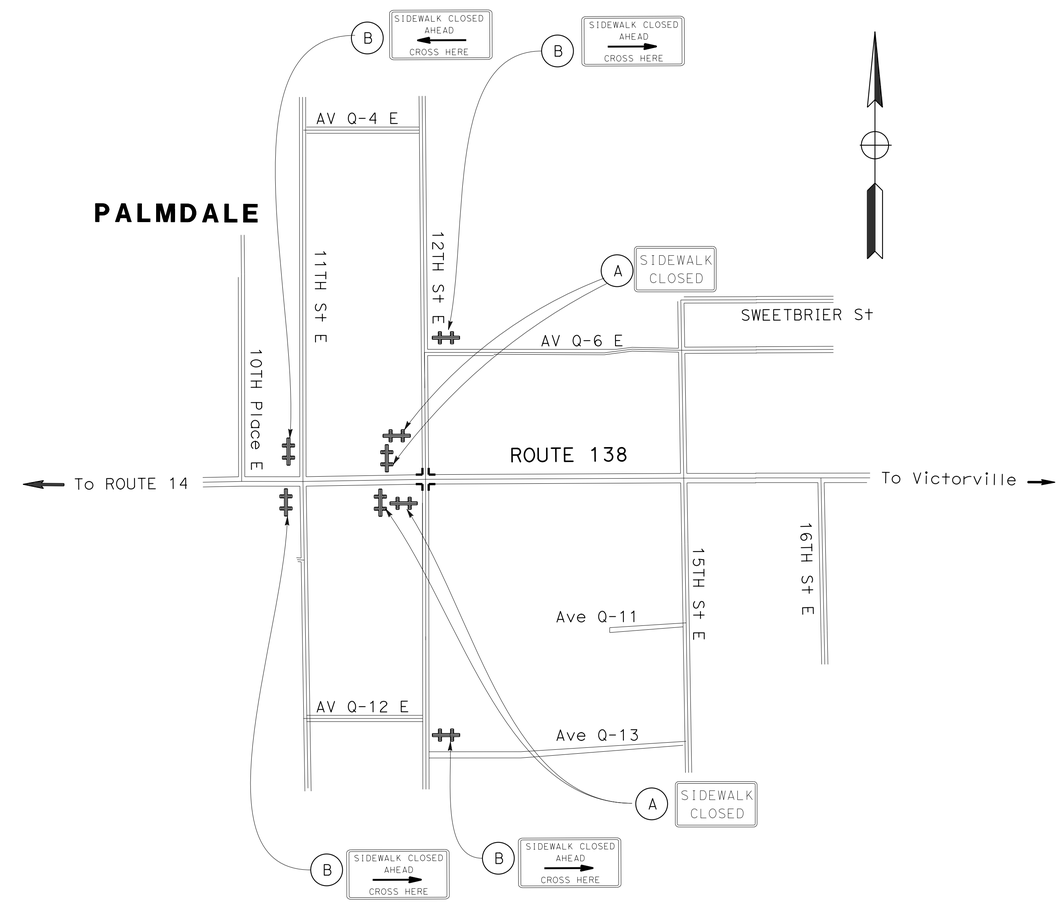

STAGE 2

TRAFFIC HANDLING PLAN
TRAFFIC CONTROL SYSTEM FOR PEDESTRIAN SIGNS

NO SCALE

APPROVED FOR TRAFFIC HANDLING WORK ONLY

TH-1

STATE OF CALIFORNIA - DEPARTMENT OF TRANSPORTATION
Caltrans® **TRAFFIC DESIGN**

FUNCTIONAL SUPERVISOR: GRISH BIGLARIAN
CALCULATED-DESIGNED BY: SHAHAN PETROSIAN
CHECKED BY: JENNIFER L NGUYEN
REVISED BY / DATE REVISED

LAST REVISION 00-00-00 | DATE PLOTTED => 18-MAR-2016 | TIME PLOTTED => 10:18

Dist	COUNTY	ROUTE	POST MILES TOTAL PROJECT	SHEET No.	TOTAL SHEETS
07	LA	138	44.9	10	57

Jennifer Nguyen 2/22/16
REGISTERED CIVIL ENGINEER DATE

3-28-16
PLANS APPROVAL DATE

REGISTERED PROFESSIONAL ENGINEER JENNIFER NGUYEN No. C65953 Exp. 6/30/16 CIVIL STATE OF CALIFORNIA

THE STATE OF CALIFORNIA OR ITS OFFICERS OR AGENTS SHALL NOT BE RESPONSIBLE FOR THE ACCURACY OR COMPLETENESS OF SCANNED COPIES OF THIS PLAN SHEET.

LEGENDS:

- No — STRIPING DETAIL NUMBER PER CALTRANS STANDARD PLANS (WITH NUMBER)
- No — ROADSIDE SIGN INDENTIFICATION (WITH NUMBER)
- SS — INSTALL SIGN (STRAP AND SADDLE BRACKET METHOD)
- I — INSTALL ROADSIDE SIGN
- RS — RESET ROADSIDE SIGN
- R — REMOVE SIGN
- RL — RELOCATE ROADSIDE SIGN
- ROADSIDE SIGN - ONE POST
- TRAFFIC DIRECTION

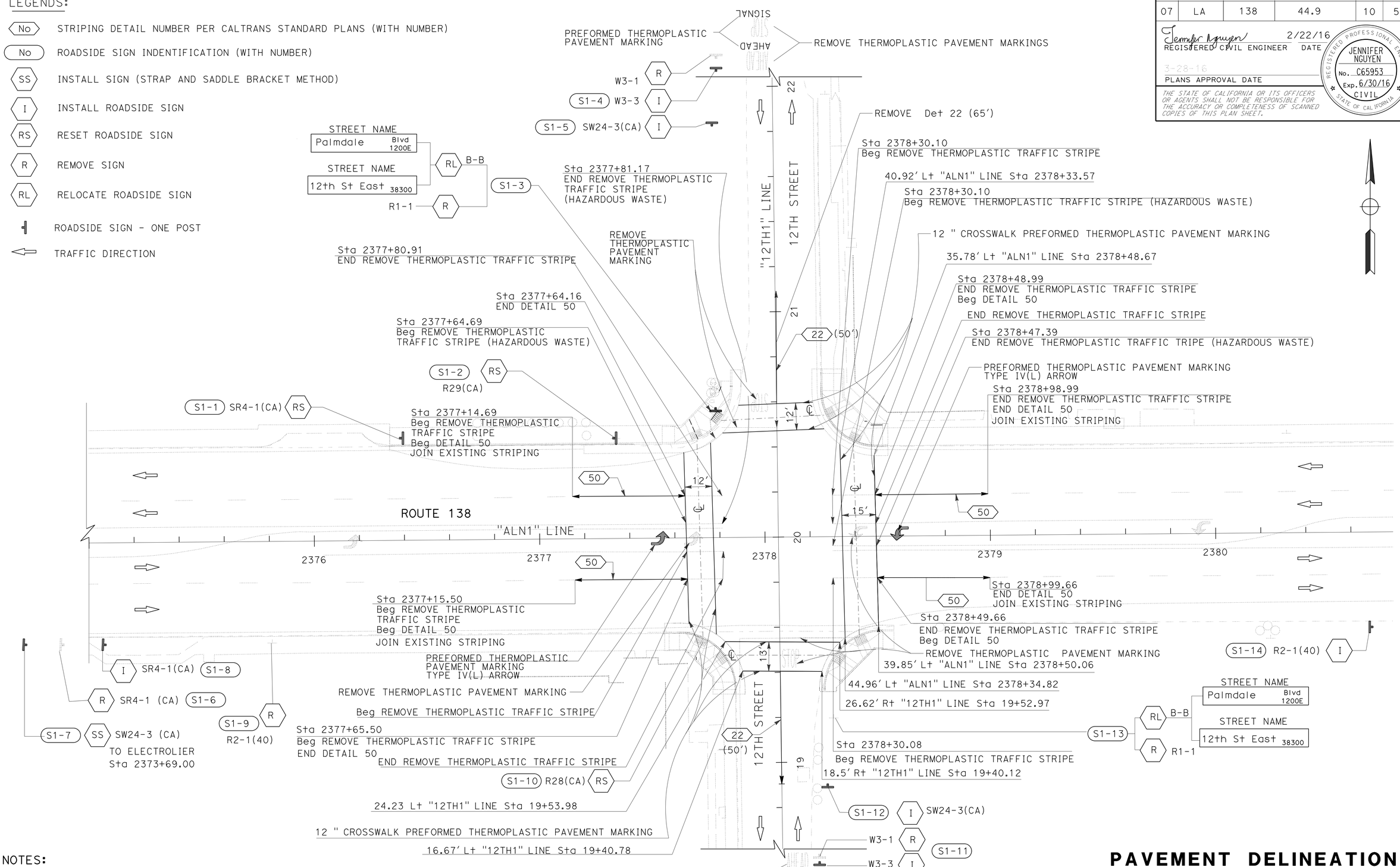

NOTES:

1. STRIPES AND PAVEMENT MARKINGS MUST BE THERMOPLASTIC, UNLESS OTHERWISE NOTED.
2. CONFLICTING STRIPING MUST BE REMOVED.
3. ALL CROSSWALKS MUST BE 12" SOLID YELLOW.
4. CROSSWALK MUST BE 12' CENTER TO CENTER OF EACH CROSSWALK LINE UNLESS OTHERWISE NOTE.

APPROVED FOR PAVEMENT DELINEATION AND SIGN WORK ONLY

PAVEMENT DELINEATION AND SIGN PLAN

SCALE: 1"= 20'

PD-1

STATE OF CALIFORNIA - DEPARTMENT OF TRANSPORTATION
Caltrans® TRAFFIC DESIGN
FUNCTIONAL SUPERVISOR: GRISH BIGLARIAN
CALCULATED-DESIGNED BY: EUGENE BRAVO
CHECKED BY: JENNIFER L NGUYEN
REVISED BY / DATE REVISED

LAST REVISION 00-00-00
DATE PLOTTED => 18-MAR-2016
TIME PLOTTED => 10:18

Dist	COUNTY	ROUTE	POST MILES TOTAL PROJECT	SHEET No.	TOTAL SHEETS
07	LA	138	44.9	11	57

Jennifer Nguyen 2/22/16
REGISTERED CIVIL ENGINEER DATE

3-28-16
PLANS APPROVAL DATE

REGISTERED PROFESSIONAL ENGINEER
JENNIFER NGUYEN
No. C65953
Exp.6/30/16
CIVIL
STATE OF CALIFORNIA

THE STATE OF CALIFORNIA OR ITS OFFICERS OR AGENTS SHALL NOT BE RESPONSIBLE FOR THE ACCURACY OR COMPLETENESS OF SCANNED COPIES OF THIS PLAN SHEET.

NOTES:

1. POSTS FOR PARKING SIGNS MUST BE INSTALLED AT 45° ANGLE TO CURB. POSTS FOR WARNING AND REGULATORY SIGNS MUST BE INSTALLED AT 90° ANGLE TO CURB
2. TWO FASTENERS (RIVETS) MUST BE USED TO ATTACH SIGN TO PERFORATED METAL POST. THREE FASTENERS MUST BE USED TO ATTACH SIGNS OF 3'-0" AND 3'-6" SIGNS TO PREFORATED METAL POST.
3. EXACT LOCATIONS AND POSITIONS OF ROADSIDE SIGNS WILL BE DETERMINED BY THE ENGINEER.

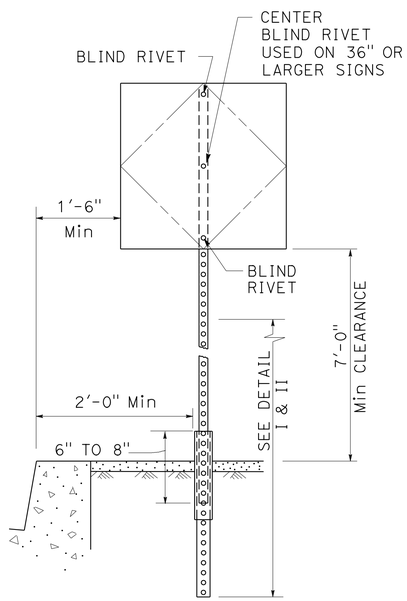

METAL SIGN POST INSTALLATION

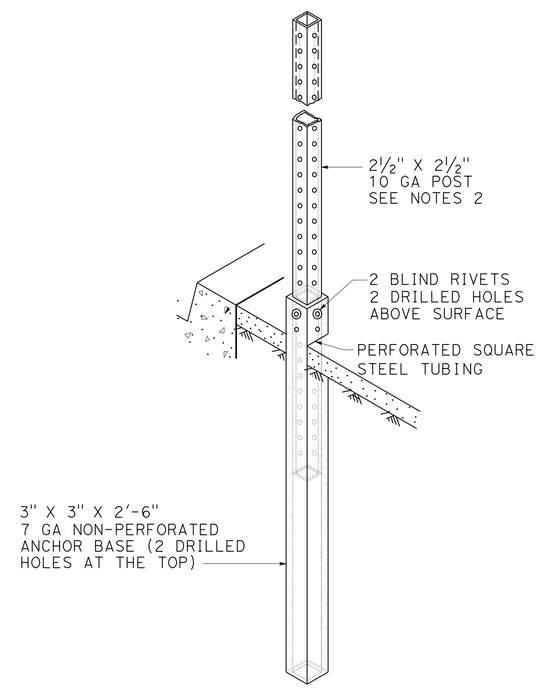

DETAIL II

SIGN PANEL
LARGER THAN 9.04 SQFT

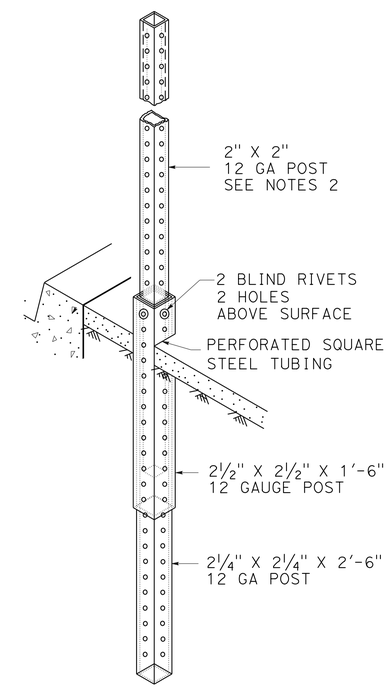

DETAIL I

SIGN PANEL
9.04 SQFT Max

METAL POST SIGN DETAILS

NO SCALE

SD-1

REVISED BY	DATE REVISED

EUGENE BRAVO
JENNIFER L NGUYEN
CALCULATED-DESIGNED BY
CHECKED BY
FUNCTIONAL SUPERVISOR
GRISH BIGLARIAN

STATE OF CALIFORNIA - DEPARTMENT OF TRANSPORTATION
Caltrans
TRAFFIC DESIGN

LAST REVISION 00-00-00
DATE PLOTTED => 18-MAR-2016
TIME PLOTTED => 10:19

Dist	COUNTY	ROUTE	POST MILES TOTAL PROJECT	SHEET No.	TOTAL SHEETS
07	LA	138	44.9	12	57

REGISTERED CIVIL ENGINEER 2/22/16 DATE

3-28-16
PLANS APPROVAL DATE

REGISTERED PROFESSIONAL ENGINEER JENNIFER NGUYEN No. C65953 Exp.6/30/16 CIVIL STATE OF CALIFORNIA

THE STATE OF CALIFORNIA OR ITS OFFICERS OR AGENTS SHALL NOT BE RESPONSIBLE FOR THE ACCURACY OR COMPLETENESS OF SCANNED COPIES OF THIS PLAN SHEET.

NOTES:

1. SIGNS ARE MUTCD (MANUAL ON UNIFORM TRAFFIC CONTROL DEVICES, NOV 2014 EDITION) CODED EXCEPT AS NOTED.
2. (CA) DENOTES CALIFORNIA CODED SIGNS.
3. FOR SIGN SPECIFICATIONS SEE CALTRANS WEBSITE: http://www.dot.ca.gov/hq/traffops/engineering/control-devices/specs.htm

LEGEND

B = BLACK ; R = RED ; W = WHITE ; FY = FLUORESCENT YELLOW-GREEN; Y=YELLOW; G=GREEN

ROADSIDE SIGNS

SHEET No	SIGN No	SIGN CODE	PANEL SIZE (INCH X INCH)	POST DATA SIZE (INCH X INCH)	SIGN FACING MATERIAL: SINGLE FACED	DOUBLE FACED	BACKGROUND: SHEETING COLOR	BACKGROUND: RETRO - REFLECTIVE ASTM TYPE	LEGEND: SHEETING COLOR	LEGEND: RETRO - REFLECTIVE ASTM TYPE	LEGEND: NON - REFLECTIVE	GRAFFITI FILM PREMIUM	FURNISH SINGLE SHEET ALUMINUM SIGN (0.063"- UNFRAMED) FOR RETROREFLECTIVE SHEETING (TYPE XI) SQFT	FURNISH SINGLE SHEET ALUMINUM SIGN (0.063"- UNFRAMED) SQFT	RETROREFLECTIVE SHEETING (TYPE XI) SQFT	ROADSIDE SIGN (WOOD) ONE POST EA	METAL (ROADSIDE SIGN) LB	RESET ROADSIDE SIGN (METAL POST) EA	INSTALL SIGN (STRAP & SADDLE BRACKET METHOD) EA	RELOCATE ROADSIDE SIGN (METAL POST) EA	REMOVE ROADSIDE SIGN EA	TREATED WOOD WASTE LB	REMARKS
PD-1	S1-1	SR4-1(CA)																1					SCHOOL SPEED LIMIT ASSEMBLY C (CA) - 25
	S1-2	R29(CA)																1					
	S1-3	STREET NAME																		1			PALMDALE Blvd 12TH St EAST
		R1-1																			1		STOP
	S1-4	W3-1																			1	35	STOP AHEAD
		W3-3	30" x 30"	4" x 6"	X		Y	XI	R/G		XI	X	6.25		6.25	1							SIGNAL AHEAD
	S1-5	SW24-3(CA)	36" X 48"	4" X 6"	X		FY	XI	B		XI	X	9.75		9.75	1							SCHOOL CROSSWALK WARNING ASSEMBLY D (CA)
	S1-6	SR4-1(CA)																			1		SCHOOL SPEED LIMIT ASSEMBLY C (CA) - 25
	S1-7	SW24-3(CA)	36" X 48"	2 ½" X 2 ½"	X		FY	XI	B		XI	X	9.75		9.75				1				SCHOOL CROSSWALK WARNING ASSEMBLY D (CA)
	S1-8	SR4-1(CA)	36" X 72"	2 ½" X 2 ½"	X		W /FY	IX	B		IX	X		18.0			50						SCHOOL SPEED LIMIT ASSEMBLY C (CA) - 25
	S1-9	R2-1(40)																			1	35	SPEED LIMIT 40
	S1-10	R28(CA)																1					NO PARKING ANY TIME (Rt AND Lt ARROW)
	S1-11	W3-1																			1	35	STOP AHEAD
		W3-3	30" x 30"	4" x 6"	X		Y	XI	R/G		XI	X	6.25		6.25	1							SIGNAL AHEAD
	S1-12	SW24-3(CA)	36" X 48"	4" X 6"	X		FY	XI	B		XI	X	9.75		9.75	1							SCHOOL CROSSWALK WARNING ASSEMBLY D (CA)
	S1-13	STREET NAME																		1			PALMDALE Blvd 12TH St EAST
		R1-1																			1		STOP
	S1-14	R2-1(40)	36" X 48"	2 ½" X 2 ½"	X		W	IX	B		IX	X		12.0			50						SPEED LIMIT 40
	TOTAL												41.75	30.0	41.75	4	100	3	1	2	6	105	

SIGN QUANTITIES
SQ-1

REVISED BY | DATE REVISED
EUGENE BRAVO | JENNIFER L NGUYEN
CALCULATED-DESIGNED BY | CHECKED BY
FUNCTIONAL SUPERVISOR: GRISH BIGLARIAN
STATE OF CALIFORNIA - DEPARTMENT OF TRANSPORTATION
Caltrans® TRAFFIC DESIGN

LAST REVISION 00-00-00 | DATE PLOTTED => 18-MAR-2016 | TIME PLOTTED => 12:35

Dist	COUNTY	ROUTE	POST MILES TOTAL PROJECT	SHEET No.	TOTAL SHEETS
07	LA	138	44.9	13	57

Jennifer Nguyen 2/22/16
REGISTERED CIVIL ENGINEER DATE

3-28-16
PLANS APPROVAL DATE

REGISTERED PROFESSIONAL ENGINEER
JENNIFER NGUYEN
No. C65953
Exp. 6/30/16
CIVIL
STATE OF CALIFORNIA

THE STATE OF CALIFORNIA OR ITS OFFICERS OR AGENTS SHALL NOT BE RESPONSIBLE FOR THE ACCURACY OR COMPLETENESS OF SCANNED COPIES OF THIS PLAN SHEET.

PAVEMENT DELINEATION QUANTITIES

SHEET NO.	THERMOPLASTIC TRAFFIC STRIPE 4"		THERMOPLASTIC PAVEMENT MARKING (PREFORMED)				PAVEMENT MARKER RETROREFLECTIVE		REMOVE THERMOPLASTIC TRAFFIC STRIPE	REMOVE THERMOPLASTIC PAVEMENT MARKING	REMOVE PAVEMENT MARKER	REMOVE YELLOW THERMOPLASTIC TRAFFIC STRIPE (HAZARDOUS WASTE)
	DETAIL 50	DETAIL 22	ARROW	CROSSWALK (YELLOW)	WORDS (AHEAD)	WORDS (SIGNAL)	TYPE D	TYPE G				
	LF	LF	SQFT	SQFT	SQFT	SQFT	EA	EA	LF	SQFT	EA	LF
PD-1	200	194	30	497	62	64	11	12	292	234	43	262
TOTAL	394		653				23		292	234	43	262

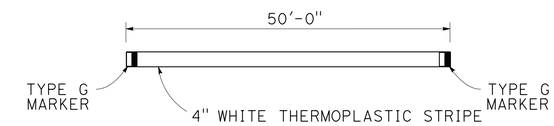

DETAIL 50

ROADWAY QUANTITIES

SHEET No.	LOCATION	REMOVE CONCRETE (CURB, GUTTER & SIDEWALK) CURB & CUTTER	SW	MINOR CONCRETE (CURB, SIDEWALK AND CURB RAMP)	REMOVE CURB	ROADWAY EXCAVATION	DETECTABLE WARNING SURFACE	PRE/POST CONSTRUCTION SURVEYS
		CY	CY	CY	LF	CY	SQFT	EA
L-1	Sta 2376+33.75 TO Sta 2377+89.91			30.82	108	7.83	30	1
	Sta 2378+21.34 TO Sta 2378+54.87	3.17	5.57	10.06		8.74	30	1
	Sta 2377+55.09 TO Sta 2377+90.58	2.80	6.13	12.15		6.13	40	1
	Sta 2378+23.62 TO Sta 2378+56.84			7.87		4.16	40	1
SUB-TOTAL		5.97	11.70	60.90	108	26.86	140	4
TOTAL		17.66		60.90	108	26.86	140	4

SUMMARY OF QUANTITIES

Q-1

STATE OF CALIFORNIA - DEPARTMENT OF TRANSPORTATION
Caltrans® TRAFFIC DESIGN

FUNCTIONAL SUPERVISOR: GRISH BIGLARIAN
CALCULATED-DESIGNED BY: SHAHAN PETROSIAN
CHECKED BY: JENNIFER L NGUYEN
REVISED BY
DATE REVISED

LAST REVISION 00-00-00
DATE PLOTTED => 18-MAR-2016
TIME PLOTTED => 10:19

Dist	COUNTY	ROUTE	POST MILES TOTAL PROJECT	SHEET No.	TOTAL SHEETS
07	LA	138	44.9	14	57

REGISTERED ELECTRICAL ENGINEER 2/22/16 DATE

3-28-16
PLANS APPROVAL DATE

REGISTERED PROFESSIONAL ENGINEER JESSE RUELAS No. E015604 Exp. 12/31/17 ELECT STATE OF CALIFORNIA

THE STATE OF CALIFORNIA OR ITS OFFICERS OR AGENTS SHALL NOT BE RESPONSIBLE FOR THE ACCURACY OR COMPLETENESS OF SCANNED COPIES OF THIS PLAN SHEET.

NOTE:

1. FOR ACCURATE RIGHT OF WAY DATA, CONTACT RIGHT OF WAY ENGINEERING AT THE DISTRICT OFFICE.
2. FOR A , B AND C DIMENSIONS, SEE POLE SCHEDULE. THIS SHEET.

LEGEND: (THIS SHEET ONLY)

1 INSTALL 120/240 V TYPE III-BF METERED SERVICE EQUIPMENT ENCLOSURE WITH:
- 100 A, 240 V, 2P, CB - MAIN
- 50 A, 120 V, 1P, CB - SIGNAL
- 30 A, 240 V, 2P, CB - LIGHTING.
- 15 A, 120 V, 1P, CB - TYPE V PEC.
- Ctid# 07-53-138-0-044.941 M
- ADDRESS: 1187½ E. PALMDALE Blvd
- P.P. No. 4434536E

2 INSTALL DEPARTMENT-FURNISHED MODEL 2070 CONTROLLER ASSEMBLY WITH 2 MODEL 2070 CONTROLLER UNITS IN NEW MODEL 332L CONTROLLER CABINET. INSTALL DEPARTMENT-FURNISHED 2 MODEL 2070-6B MODEMS, 1 MODEL 2070-7G MODULE AND C2 MODEM HARNESS. INSTALL BATTERY BACKUP SYSTEM WITH DEPARTMENT-FURNISHED COMPONENTS OF BATTERY BACKUP SYSTEM. INSTALL TRAFFIC SIGNAL INTERCONNECT AND WIRELESS DATA SERVICE SYSTEM. (SEE DETAIL SHEETS)

3 INSTALL 12 PAIR #19 SIC AND 1#8 (G) TO 10TH STREET.
RC EXISTING SIC.

4 INSTALL 2"C, 2-12 PAIR #19 SIC AND 1#8 (G)

5 INSTALL TYPE H SERVICE RISER PER ELECTRIC UTILITY REQUIRMENTS.

6 INSTALL 12 PAIR #19 SIC AND 1#8 (G) TO 17TH STREET.
RC EXISTING SIC.

7 INSTALL 3"C, PT. CONDUCTORS BY ELECTRIC UTILITY.

8 INSTALL PULL BOX PER ELECTRIC UTILITY REQUIRMENTS.

9 INSTALL SIGN TYPE R3-4.

10 INSTALL SIGN TYPE R73-2.

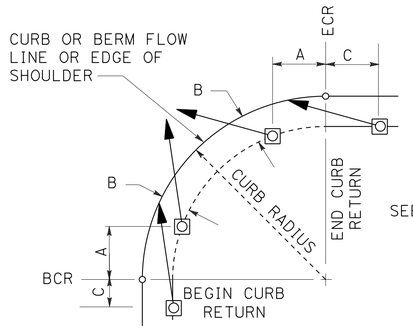

SIGNAL STANDARD PLACEMENT DIMENSIONS
NOT TO SCALE

NEW PHASE DIAGRAM

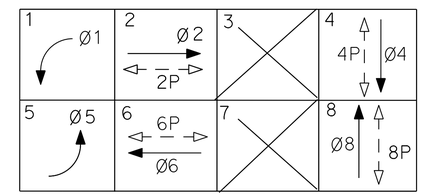

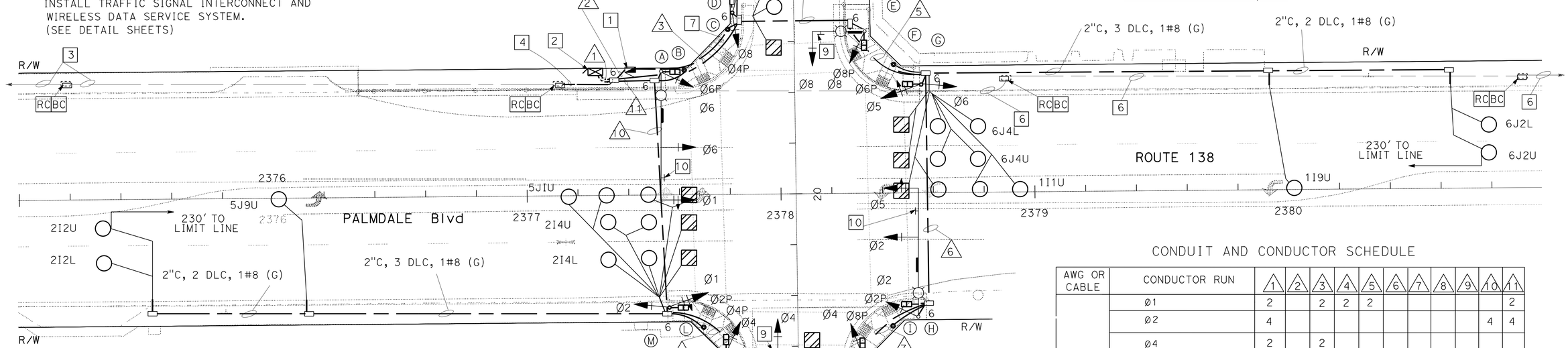

POLE AND EQUIPMENT SCHEDULE

NO.	STANDARD Type	STANDARD SMA	STANDARD LMA	veh Sig Mtg SMA	veh Sig Mtg Pole	Ped SIGNAL Mtg	APS Ø	APS ARROW	LED LUMINAIRE	SPECIAL REQUIRMENT REFLECTORIZED STREET NAME SIGN TYPE XI	LOCATION * A	LOCATION * B	LOCATION * C
A	29-5-100	50'	15'	2-MAS	SV-1-T	SP-1-T	_	-	165 W	12th St EAST	-	7	8
B	PBA POST	-	-	-	-	-	4	←	-	-	1	7	-
C	PBA POST	-	-	-	-	-	6	→	-	-	2	6	-
D	1-A	-	-	-	TV-2-T	SP-1-T	-	-	-	-	-	5	5
E	17-3-100	20'	12'	MAS	SV-1-T	SP-1-T	6	←	165 W	PALMDALE Blvd	-	8	-
F	PBA POST	-	-	-	-	-	8	→	-	-	5	10	-
G	1-A	-	-	-	TV-2-T	SP-1-T	-	-	-	-	-	3	5
H	29-5-100	50'	15'	2-MAS	SV-1-T	SP-1-T	-	-	165 W	12th St EAST	-	7	2
I	PBA POST	-	-	-	-	-	8	←	-	-	8	8	-
J	1-A	-	-	-	TV-2-T	SP-1-T	2	→	-	-	3	5	-
K	17-3-100	20'	12'	MAS	SV-1-T	SP-1-T	2	←	165 W	PALMDALE Blvd	5	8	-
L	PBA POST	-	-	-	-	-	4	→	-	-	7	10	-
M	1-A	-	-	-	TV-2-T	SP-1-T	-	-	-	-	-	3	7

* FINAL LOCATION AS DIRECTED BY THE ENGINEER. APPROXIMATE LOCATIONS SHOWN IN FEET.

CONDUIT AND CONDUCTOR SCHEDULE

AWG OR CABLE	CONDUCTOR RUN	1	2	3	4	5	6	7	8	9	10	11
DLC	Ø1	2		2	2	2						2
	Ø2	4									4	4
	Ø4	2		2								
	Ø5	2									2	2
	Ø6	4		4	4	4						
	Ø8	2							2	2	2	2
	TOTAL DLC	16		8	6	6			2	2	8	10
#10	LUMINAIRES		2	2	2			2	2	2	2	2
#6	SIGNAL SERVICE	2	2									
#8	EQUIPMENT GROUNDING CONDUCTOR	1	1	1	1	1	1	1	1	1	1	1
28-CONDUCTOR CABLE		4		2	2	2		2	2	2	2	2
12 PAIR #19 SIC		2										
CONDUIT SIZE		2-3"	2-2"	3"	3"	3"	3"	3"	3"	3"	3"	3"

PALMDALE Blvd AND 12TH STREET EAST

APPROVED FOR ELECTRICAL WORK ONLY

SIGNAL AND LIGHTING
SCALE 1" = 20'

E-1

REVISED BY | DATE REVISED
HOSSAIN KIAN | JESSE RUELAS
CALCULATED-DESIGNED BY | CHECKED BY
FUNCTIONAL SUPERVISOR: YI TSAU
STATE OF CALIFORNIA - DEPARTMENT OF TRANSPORTATION
Caltrans TRAFFIC DESIGN

S:\design\4p0201\traffic\Final Plans\74p020ua001.dgn

LAST REVISION | DATE PLOTTED => 18-MAR-2016 | TIME PLOTTED => 10:19
00-00-00

BORDER LAST REVISED 7/2/2010 | USERNAME => s116095 | DGN FILE => 74p020ua001.dgn | RELATIVE BORDER SCALE IS IN INCHES 0 1 2 3 | UNIT 1880 | PROJECT NUMBER & PHASE 0715000181

Dist	COUNTY	ROUTE	POST MILES TOTAL PROJECT	SHEET No.	TOTAL SHEETS
07	LA	138	44.9	15	57

REGISTERED ELECTRICAL ENGINEER 2/22/16 DATE

3-28-16
PLANS APPROVAL DATE

REGISTERED PROFESSIONAL ENGINEER JACQUELINE C. TAN No. E015611 Exp. 12/31/17 ELECTRICAL STATE OF CALIFORNIA

THE STATE OF CALIFORNIA OR ITS OFFICERS OR AGENTS SHALL NOT BE RESPONSIBLE FOR THE ACCURACY OR COMPLETENESS OF SCANNED COPIES OF THIS PLAN SHEET.

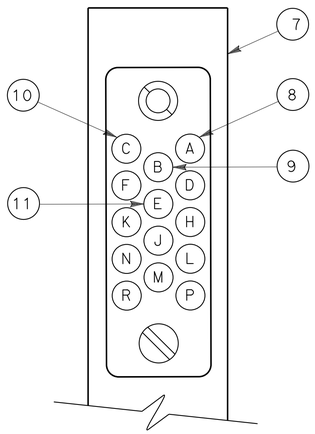

CONNECTOR C2P DETAIL

DETAIL A

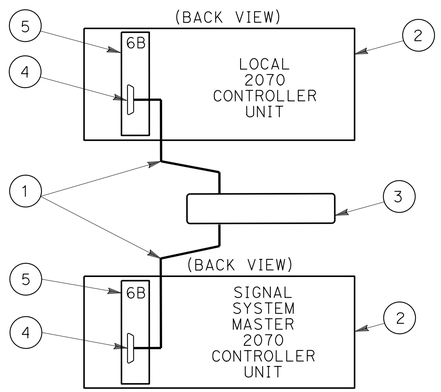

DETAIL B

CABINET WITH
LOCAL CONTROLLER
AND SIGNAL SYSTEM MASTER

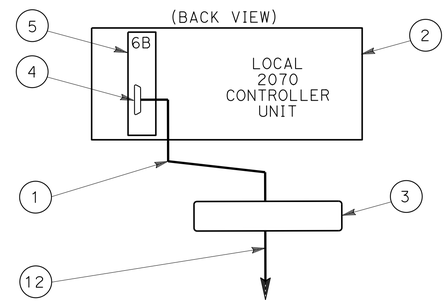

DETAIL C

LOCAL CONTROLLER
WITH STAND ALONE
GPS TIME SOURCE DEVICE

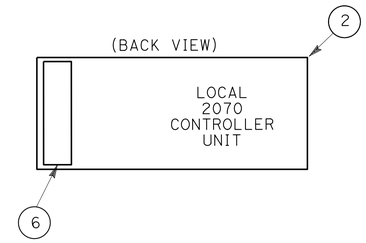

DETAIL D

WITH GPS TIME
SOURCE MODULE

NOTES-THIS SHEET ONLY

1. C2 MODEM HARNESS
2. MODEL 2070 CONTROLLER
3. TERMINAL BLOCK Ø (TBØ)
4. C2S PORT
5. MODEL 2070-6B MODEM IN SLOT A2
6. MODEL 2070-7G MODULE IN SLOT A1
7. CONNECTOR C2P
8. C2 A SIGNAL (WHITE)
9. C2 B SIGNAL (GREEN)
10. C2 C SIGNAL (RED)
11. C2 E SIGNAL (BLACK)
12. SIC(S) SIGNAL INTERCONNECT CABLE(S) TO OTHER CABINET(S)

LEGEND (THIS SHEET)

SIC SIGNAL INTERCONNECT CABLE
C2P C2 PLUG
C2S C2 SOCKET

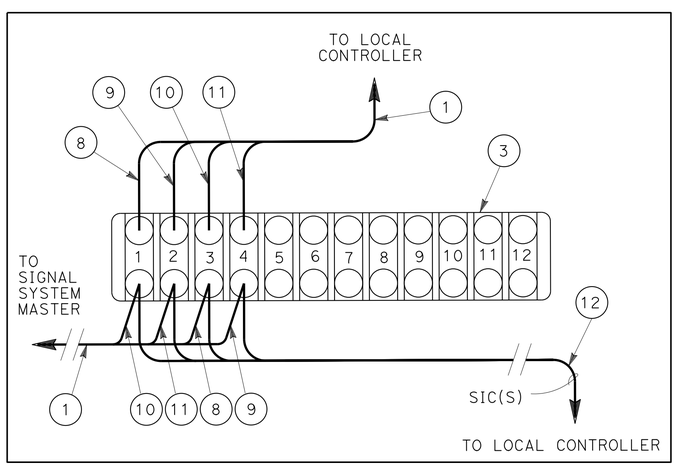

DETAIL E

WITH TWO OR MORE INTERCONNECTS

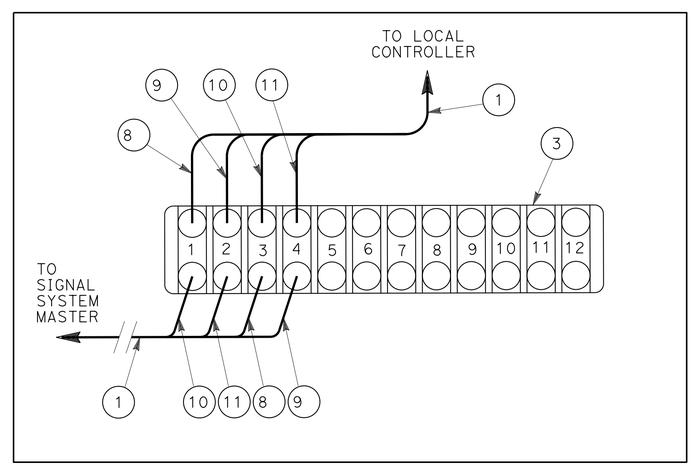

DETAIL F

WITH ONE INTERCONNECT

(TYPICAL TRAFFIC SIGNAL INTERCONNECT SYSTEM DETAILS)

ELECTRICAL DETAILS

NO SCALE

E-2

STATE OF CALIFORNIA - DEPARTMENT OF TRANSPORTATION
Caltrans® OFFICE OF ITS

FUNCTIONAL SUPERVISOR: JACQUELINE C. TAN
CALCULATED-DESIGNED BY: HOSSAIN KIAN
CHECKED BY: PATRICK P. LUI
REVISED BY / DATE REVISED

LAST REVISION 00-00-00
DATE PLOTTED => 18-MAR-2016
TIME PLOTTED => 10:19

Dist	COUNTY	ROUTE	POST MILES TOTAL PROJECT	SHEET No.	TOTAL SHEETS
07	LA	138	44.9	16	57

REGISTERED ELECTRICAL ENGINEER DATE 2/22/16

3-28-16
PLANS APPROVAL DATE

REGISTERED PROFESSIONAL ENGINEER JACQUELINE C. TAN No. E015611 Exp. 12/31/17 ELECT STATE OF CALIFORNIA

THE STATE OF CALIFORNIA OR ITS OFFICERS OR AGENTS SHALL NOT BE RESPONSIBLE FOR THE ACCURACY OR COMPLETENESS OF SCANNED COPIES OF THIS PLAN SHEET.

LEGEND (THIS SHEET)

AC	ALTERNATING CURRENT
IP	INTERNET PROTOCOL
LARTMC	LOS ANGELES REGIONAL TRANSPORTATION MANAGEMENT CENTER
GPS	GLOBAL POSITIONING SYSTEM
SMA	SUBMINIATURE VERSION A
TNC	THREADED NEILL-CONCELMAN
TSMSS	TRAFFIC SIGNAL MANAGEMENT SURVEILLIANCE SYSTEM
V(ac)	VOLTS ALTERNATING CURRENT

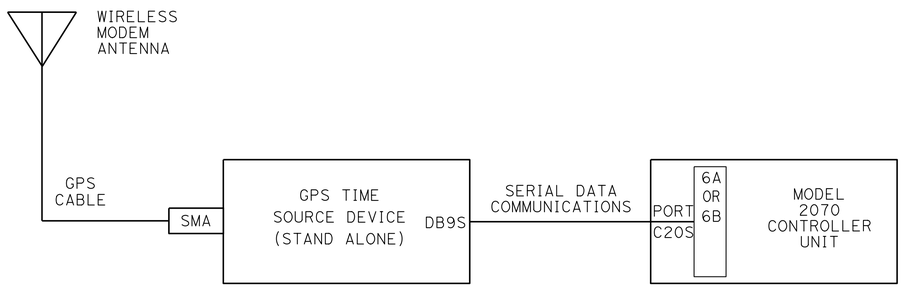

DETAIL G

GPS TIME SOURCE DEVICE CONNECTION DETAIL

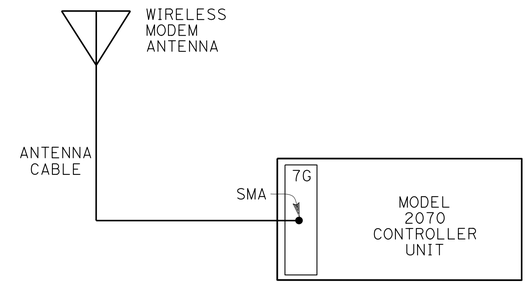

DETAIL I

2070-7G MODULE CONNECTION DETAIL

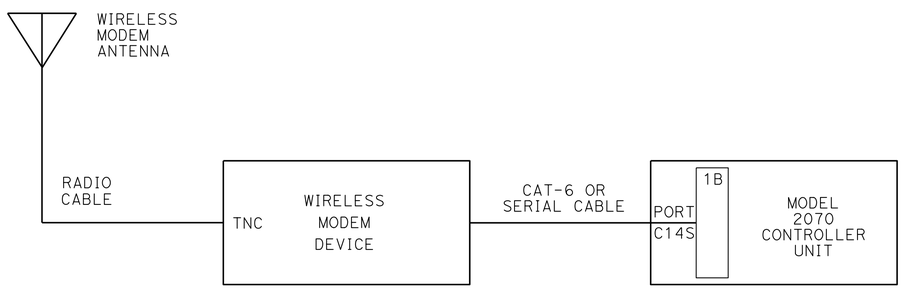

DETAIL H

WIRELESS MODEM DEVICE CONNECTION DETAIL

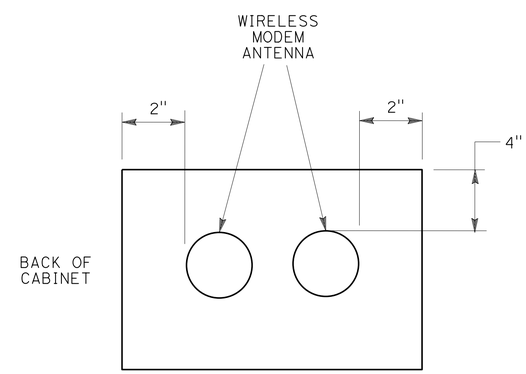

TOP VIEW

MODEL 332L CONTROLLER CABINET

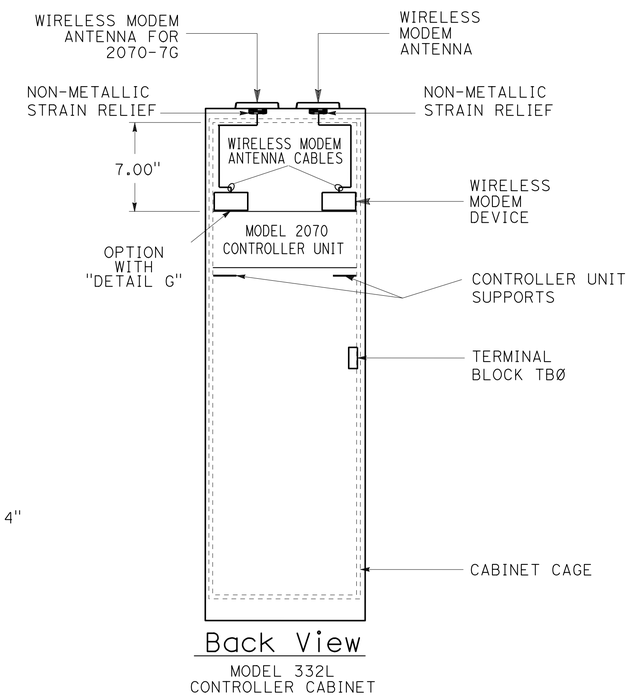

Back View

MODEL 332L CONTROLLER CABINET

WIRELESS MODEM DEVICE AND WIRELESS MODEM ANTENNA PLACEMENT DETAIL

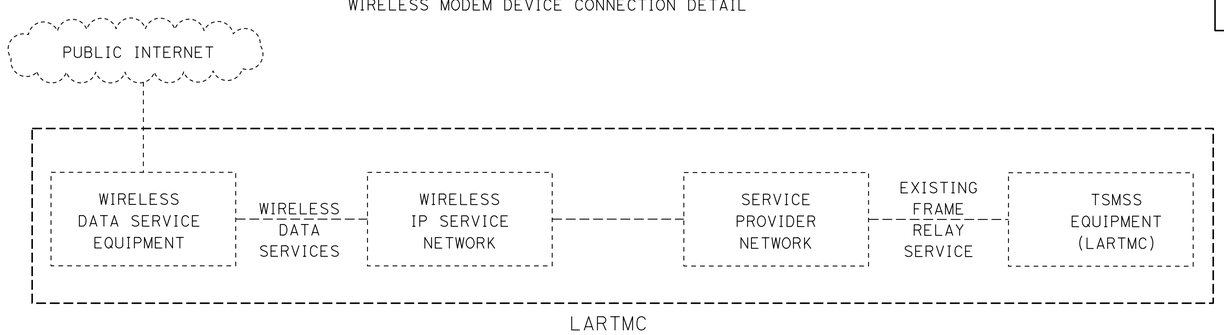

WIRELESS CONNECTIVITY DETAIL

(TYPICAL WIRELESS DATA SERVICE AND GPS TIME BASE SYSTEMS DETAILS)

ELECTRICAL DETAILS

NO SCALE

E-3

STATE OF CALIFORNIA - DEPARTMENT OF TRANSPORTATION
Caltrans® **OFFICE OF ITS**

FUNCTIONAL SUPERVISOR: JACQUELINE C. TAN
CALCULATED-DESIGNED BY: HOSSAIN KIAN
CHECKED BY: PATRICK P. LUI
REVISED BY
DATE REVISED

LAST REVISION 09-15-11
DATE PLOTTED => 18-MAR-2016
TIME PLOTTED => 10:19

Dist	COUNTY	ROUTE	POST MILES TOTAL PROJECT	SHEET No.	TOTAL SHEETS
07	LA	138	44.9	17	57

REGISTERED ELECTRICAL ENGINEER 2/22/16 DATE

3-28-16
PLANS APPROVAL DATE

REGISTERED PROFESSIONAL ENGINEER JESSE RUELAS No. E015604 Exp. 12/31/17 ELECT STATE OF CALIFORNIA

THE STATE OF CALIFORNIA OR ITS OFFICERS OR AGENTS SHALL NOT BE RESPONSIBLE FOR THE ACCURACY OR COMPLETENESS OF SCANNED COPIES OF THIS PLAN SHEET.

NOTE: ITEMS SHOWN IN TABLES ARE NOT SEPARATE PAY ITEM, FOR INFORMATION ONLY.

SIGNAL AND LIGHTING

SHEET No.	28CSC	No. 6 CONDUCTOR	No. 8 CONDUCTOR	No. 10 CONDUCTOR	PULL BOXES (EACH) #5	3"C TYPE 1	2"C TYPE 1	LUMINAIRES (EACH)	SERVICE CABINET (EACH)	FOUNDATION (POLES, CABINETS)	PULL BOXES (EACH) #6	PED SIGNAL HEAD	PBA (EACH)	SIGNAL HEADS (EACH)	SIGNAL POLES (EACH)
	LF							EA							
E-1	1100	100	1250	1200	8	600	740	4	1	15	9	8	8	18	13

SIGNAL AND LIGHTING

SHEET No.	SIC	DLC	LOOP TYPE E	LOOP TYPE D	SIGN	TRAFFIC PULL BOXES (EACH) #5
	LF		EA			
E-1	3990	3000	24	8	8	1

ELECTRICAL QUANTITIES

E-4

STATE OF CALIFORNIA - DEPARTMENT OF TRANSPORTATION
Caltrans® TRAFFIC DESIGN

FUNCTIONAL SUPERVISOR: YI TSAU
CALCULATED-DESIGNED BY / CHECKED BY
HOSSAIN KIAN / JESSE RUELAS
REVISED BY / DATE REVISED

LAST REVISION 00-00-00 | DATE PLOTTED => 18-MAR-2016 | TIME PLOTTED => 10:19

M

Maint	MAINTENANCE
Max	MAXIMUM
MB	METAL BEAM
MBB	METAL BEAM BARRIER
MBGR	METAL BEAM GUARD RAILING
Med	MEDIAN
MGS	MIDWEST GUARDRAIL SYSTEM
MH	MANHOLE
Min	MINIMUM
Misc	MISCELLANEOUS
Misc I & S	MISCELLANEOUS IRON AND STEEL
Mkr	MARKER
Mod	MODIFIED,
	MODIFY
Mon	MONUMENT
MP	METAL PLATE
MPGR	METAL PLATE GUARD RAILING
MR	MOVEMENT RATING
MSE	MECHANICALLY STABILIZED EMBANKMENT
Mt	MOUNTAIN, MOUNT
Mtl	MATERIAL
MVP	MAINTENANCE VEHICLE PULLOUT

N

N	NORTH
NB	NORTHBOUND
No.	NUMBER (MUST HAVE PERIOD)
Nos.	NUMBERS (MUST HAVE PERIOD)
NPS	NOMINAL PIPE SIZE
NS	NEAR SIDE
NSP	NEW STANDARD PLAN
NTS	NOT TO SCALE

O

Oblr	OBLITERATE
OC	OVERCROSSING
OD	OUTSIDE DIAMETER
OF	OUTSIDE FACE
OG	ORIGINAL GROUND
OGAC	OPEN GRADED ASPHALT CONCRETE
OGFC	OPEN GRADED FRICTION COURSE
OH	OVERHEAD
OHWM	ORDINARY HIGH WATER MARK
O-O	OUT TO OUT
Opp	OPPOSITE
OSD	OVERSIDE DRAIN

P

P	PAGE
PAP	PERFORATED ALUMINUM PIPE
PB	PULL BOX
PC	POINT OF CURVATURE,
	PRECAST
PCC	POINT OF COMPOUND CURVE,
	PORTLAND CEMENT CONCRETE
PCMS	PORTABLE CHANGEABLE MESSAGE SIGN
PCP	PERFORATED CONCRETE PIPE,
	PRESTRESSED CONCRETE PIPE
PCVC	POINT OF COMPOUND VERTICAL CURVE
PEC	PERMIT TO ENTER AND CONSTRUCT
Ped	PEDESTRIAN
Ped OC	PEDESTRIAN OVERCROSSING
Ped UC	PEDESTRIAN UNDERCROSSING
Perm Mtl	PERMEABLE MATERIAL

P continued

PG	PROFILE GRADE
PI	POINT OF INTERSECTION
PJP	PARTIAL JOINT PENETRATION
Pkwy	PARKWAY
ℙ,PL	PLATE
P/L	PROPERTY LINE
PM	POST MILE,
	TIME FROM NOON TO MIDNIGHT
PN	PAVING NOTCH
POC	POINT OF HORIZONTAL CURVE
POT	POINT OF TANGENT
POVC	POINT OF VERTICAL CURVE
PP	PIPE PILE,
	PLASTIC PIPE,
	POWER POLE
PPL	PREFORMED PERMEABLE LINER
PPP	PERFORATED PLASTIC PIPE
PRC	POINT OF REVERSE CURVE
PRF	PAVEMENT REINFORCING FABRIC
PRVC	POINT OF REVERSE VERTICAL CURVE
PS&E	PLANS, SPECIFICATIONS AND ESTIMATES
PS, P/S	PRESTRESSED
PSP	PERFORATED STEEL PIPE
PT	POINT OF TANGENCY
PVC	POLYVINYL CHLORIDE
Pvmt	PAVEMENT

Q

Qty	QUANTITY

R

R	RADIUS
R & D	REMOVE AND DISPOSE
R & S	REMOVE AND SALVAGE
R/C	RATE OF CHANGE
RCA	REINFORCED CONCRETE ARCH
RCB	REINFORCED CONCRETE BOX
RCP	REINFORCED CONCRETE PIPE
RCPA	REINFORCED CONCRETE PIPE ARCH
Rd	ROAD
Reinf	REINFORCED,
	REINFORCEMENT,
	REINFORCING
Rel	RELOCATE
Repl	REPLACEMENT
Ret	RETAINING
Rev	REVISED, REVISION
Rdwy	ROADWAY
RHMA	RUBBERIZED HOT MIX ASPHALT
Riv	RIVER
RM	ROAD-MIXED
RP	RADIUS POINT,
	REFERENCE POINT
RR	RAILROAD
RSP	ROCK SLOPE PROTECTION,
	REVISED STANDARD PLAN
Rt	RIGHT
Rte	ROUTE
RW	REDWOOD,
	RETAINING WALL
R/W	RIGHT OF WAY
Rwy	RAILWAY

S

S	SOUTH,
	SUPPLEMENT
SAE	STRUCTURE APPROACH EMBANKMENT
Salv	SALVAGE
SAPP	STRUCTURAL ALUMINUM PLATE PIPE
SB	SOUTHBOUND
SC	SAND CUSHION
SCSP	SLOTTED CORRUGATED STEEL PIPE
SD	STORM DRAIN
Sec	SECOND,
	SECTION
Sep	SEPARATION
SG	SUBGRADE
Shld	SHOULDER
Sht	SHEET
Sim	SIMILAR
℄	STATION LINE
SM	SELECTED MATERIAL
Spec	SPECIAL,
	SPECIFICATIONS
SPP	SLOTTED PLASTIC PIPE
SS	SLOPE STAKE
SSBM	STRAP AND SADDLE BRACKET METHOD
SSD	STRUCTURAL SECTION DRAIN
SSPA	STRUCTURAL STEEL PLATE ARCH
SSPP	STRUCTURAL STEEL PLATE PIPE
SSPPA	STRUCTURAL STEEL PLATE PIPE ARCH
SSRP	STEEL SPIRAL RIB PIPE
St	STREET
Sta	STATION
STBB	SINGLE THRIE BEAM BARRIER
Std	STANDARD
Str	STRUCTURE
Surf	SURFACING
SW	SIDEWALK,
	SOUND WALL
Swr	SEWER
Sym	SYMMETRICAL
S4S	SURFACE 4 SIDES

T

T	SEMI-TANGENT
Tan	TANGENT
TBB	THRIE BEAM BARRIER
Tbr	TIMBER
TC	TOP OF CURB
TCB	TRAFFIC CONTROL BOX
TCE	TEMPORARY CONSTRUCTION EASEMENT
Tel	TELEPHONE
Temp	TEMPORARY
TG	TOP OF GRADE
Tot	TOTAL
TP	TELEPHONE POLE
TPB	TREATED PERMEABLE BASE
TPM	TREATED PERMEABLE MATERIAL
Trans	TRANSITION

T continued

TS	TRANSVERSE,
	TRAFFIC SIGNAL,
	TUBULAR STEEL
Typ	TYPICAL

U

UC	UNDERCROSSING
UD	UNDERDRAIN
UG	UNDERGROUND
UON	UNLESS OTHERWISE NOTED
UP	UNDERPASS

V

V	VALVE,
	DESIGN SPEED
Var	VARIABLE,
	VARIES
VC	VERTICAL CURVE
VCP	VITRIFIED CLAY PIPE
Vert	VERTICAL
Via	VIADUCT
Vol	VOLUME

W

W	WEST,
	WIDTH
WB	WESTBOUND
WH	WEEP HOLE
WM	WIRE MESH
WS	WATER SURFACE
WSP	WELDED STEEL PIPE
Wt	WEIGHT
WV	WATER VALVE
WW	WINGWALL
WWLOL	WINGWALL LAYOUT LINE

X

X Sec	CROSS SECTION
Xing	CROSSING

Y

Yr	YEAR
Yrs	YEARS

Dist	COUNTY	ROUTE	POST MILES TOTAL PROJECT	SHEET No.	TOTAL SHEETS
07	LA	138	44.9	18	57

Grace M. Tsushima
REGISTERED CIVIL ENGINEER

July 19, 2013
PLANS APPROVAL DATE

REGISTERED PROFESSIONAL ENGINEER
Grace M. Tsushima
No. C49814
Exp. 9-30-14
CIVIL
STATE OF CALIFORNIA

THE STATE OF CALIFORNIA OR ITS OFFICERS OR AGENTS SHALL NOT BE RESPONSIBLE FOR THE ACCURACY OR COMPLETENESS OF SCANNED COPIES OF THIS PLAN SHEET.

TO ACCOMPANY PLANS DATED 3-28-16

UNIT OF MEASUREMENT SYMBOLS:

Some of the symbols used in the project plan quantity tables and in the Bid Item List are:

TABLE A

SYMBOL USED	DEFINITIONS
ACRE	ACRE
CF	CUBIC FOOT
CY	CUBIC YARD
EA	EACH
GAL	GALLON
LB	POUND
LF	LINEAR FOOT
SQFT	SQUARE FOOT
SQYD	SQUARE YARD
STA	100 FEET
TAB	TABLET
TON	2,000 POUNDS

Some of the symbols used in the plans other than in the project plan quantity tables are:

TABLE B

SYMBOL USED	DEFINITIONS
ksi	KIPS PER SQUARE INCH
ksf	KIPS PER SQUARE FOOT
psi	POUNDS PER SQUARE INCH
psf	POUNDS PER SQUARE FOOT
lb/ft^3, pcf	POUNDS PER CUBIC FOOT
tsf	TONS PER SQUARE FOOT
mph, MPH *	MILES PER HOUR
ø	NOMINAL DIAMETER
oz	OUNCE
lb	POUND
kip	1,000 POUNDS
cal	CALORIE
ft	FOOT OR FEET
gal	GALLON

* For use on a sign panel only

STATE OF CALIFORNIA
DEPARTMENT OF TRANSPORTATION

ABBREVIATIONS (SHEET 2 OF 2)

NO SCALE

RSP A10B DATED JULY 19, 2013 SUPERSEDES STANDARD PLAN A10B DATED MAY 20, 2011 - PAGE 2 OF THE STANDARD PLANS BOOK DATED 2010.

REVISED STANDARD PLAN RSP A10B

2010 REVISED STANDARD PLAN RSP A10B

6-7-13

Dist	COUNTY	ROUTE	POST MILES TOTAL PROJECT	SHEET No.	TOTAL SHEETS
07	LA	138	44.9	19	57

REGISTERED CIVIL ENGINEER

April 20, 2012
PLANS APPROVAL DATE

REGISTERED PROFESSIONAL ENGINEER
Roberta L. McLaughlin
No. C40375
Exp. 3-31-13
CIVIL
STATE OF CALIFORNIA

THE STATE OF CALIFORNIA OR ITS OFFICERS OR AGENTS SHALL NOT BE RESPONSIBLE FOR THE ACCURACY OR COMPLETENESS OF SCANNED COPIES OF THIS PLAN SHEET.

TO ACCOMPANY PLANS DATED 3-28-16

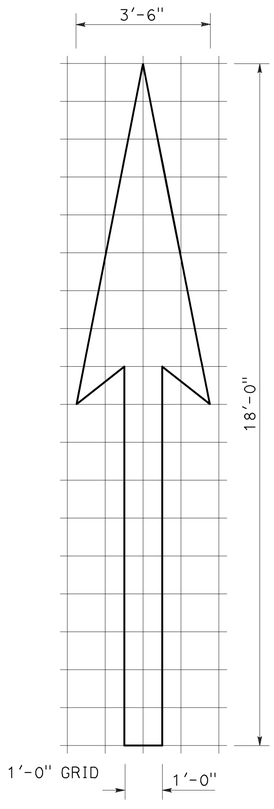

A=25 ft^2

TYPE I 18'-0" ARROW

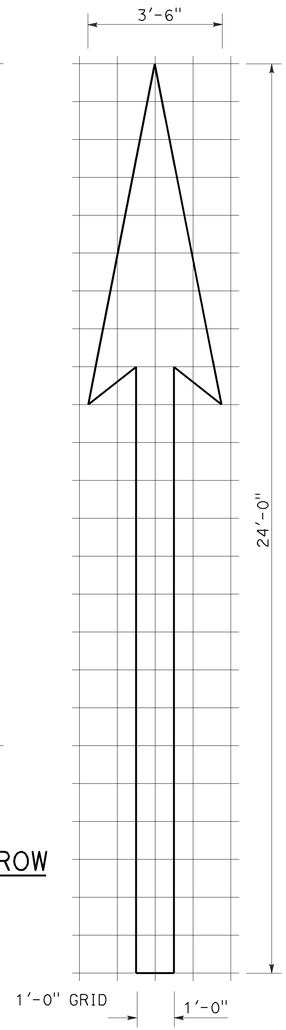

A=31 ft^2

TYPE I 24'-0" ARROW

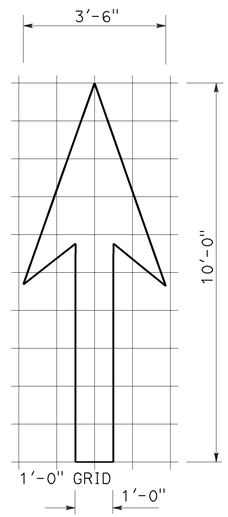

A=14 ft^2

TYPE I 10'-0" ARROW

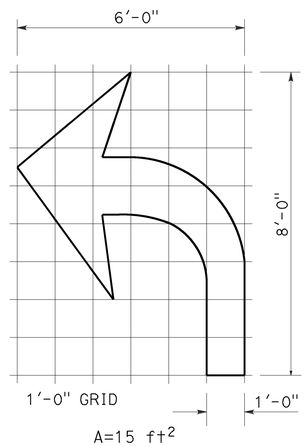

A=15 ft^2

TYPE IV (L) ARROW

(For Type IV (R) arrow, use mirror image)

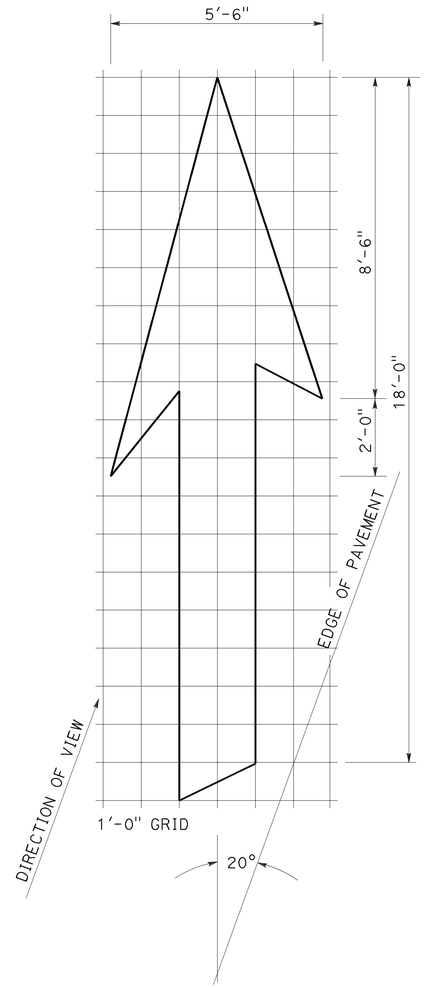

A=42 ft^2

TYPE VI ARROW

Right lane drop arrow
(For left lane, use mirror image)

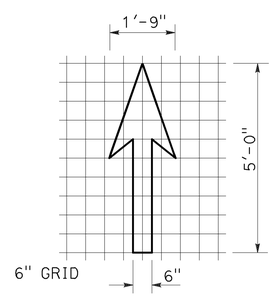

A=3.5 ft^2

BIKE LANE ARROW

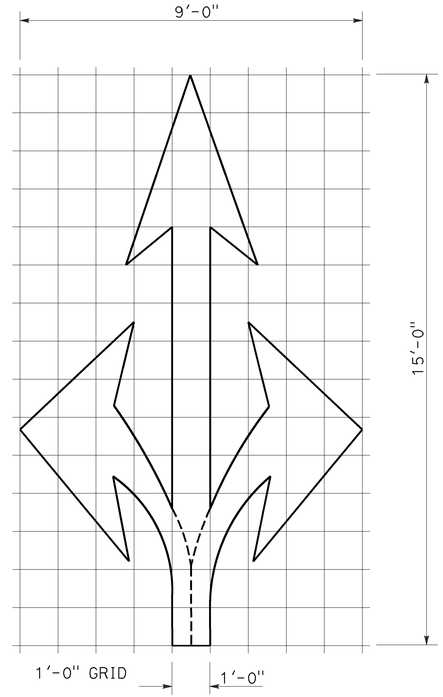

A=36 ft^2

TYPE VIII ARROW

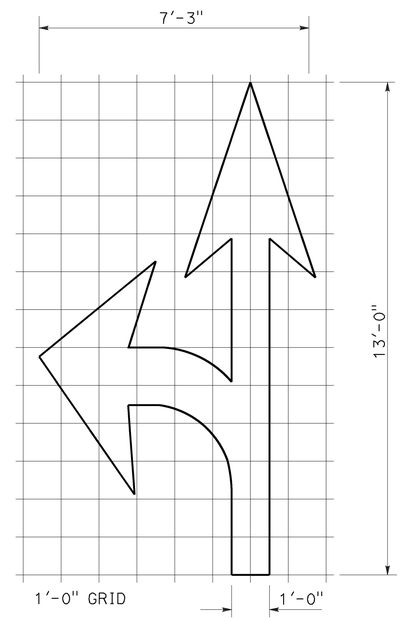

A=27 ft^2

TYPE VII (L) ARROW

(For Type VII (R) arrow, use mirror image)

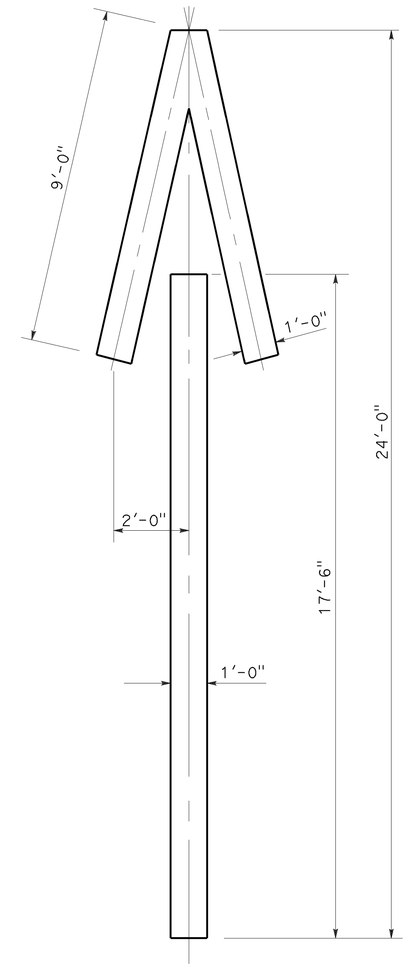

A=33 ft^2

TYPE V ARROW

NOTE:
Minor variations in dimensions may be accepted by the Engineer.

STATE OF CALIFORNIA
DEPARTMENT OF TRANSPORTATION

PAVEMENT MARKINGS ARROWS

NO SCALE

RSP A24A DATED APRIL 20, 2012 SUPERSEDES STANDARD PLAN A24A DATED MAY 20, 2011 - PAGE 13 OF THE STANDARD PLANS BOOK DATED 2010.

REVISED STANDARD PLAN RSP A24A

2010 REVISED STANDARD PLAN RSP A24A

3-14-12

Dist	COUNTY	ROUTE	POST MILES TOTAL PROJECT	SHEET No.	TOTAL SHEETS
07	LA	138	44.9	20	57

REGISTERED CIVIL ENGINEER

July 20, 2012
PLANS APPROVAL DATE

REGISTERED PROFESSIONAL ENGINEER
Roberta L. McLaughlin
No. C40375
Exp. 3-31-13
CIVIL
STATE OF CALIFORNIA

THE STATE OF CALIFORNIA OR ITS OFFICERS OR AGENTS SHALL NOT BE RESPONSIBLE FOR THE ACCURACY OR COMPLETENESS OF SCANNED COPIES OF THIS PLAN SHEET.

TO ACCOMPANY PLANS DATED 3-28-16

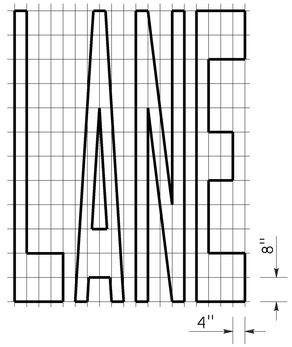

A=24 ft^2

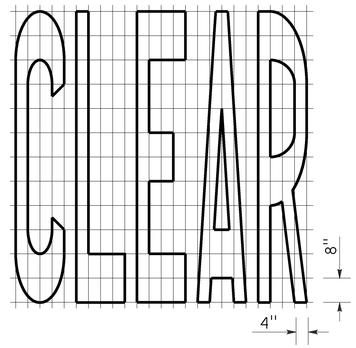

A=27 ft^2

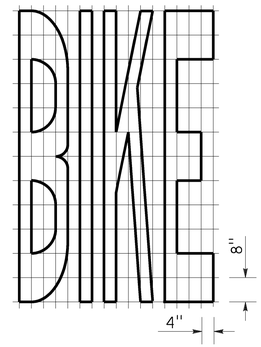

A=21 ft^2

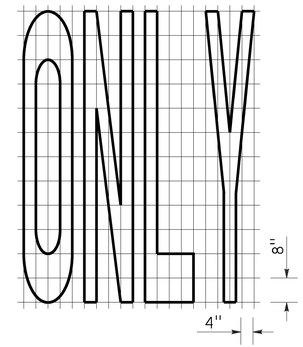

A=22 ft^2

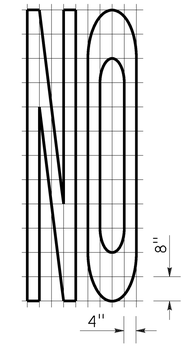

A=14 ft^2

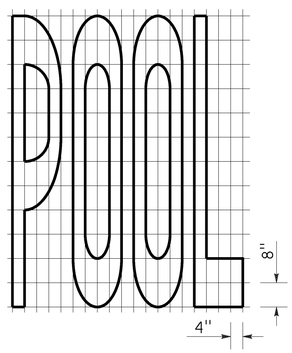

A=23 ft^2

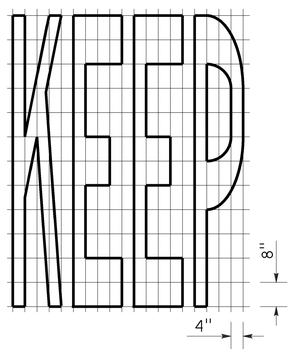

A=24 ft^2

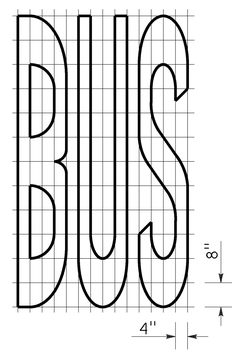

A=20 ft^2

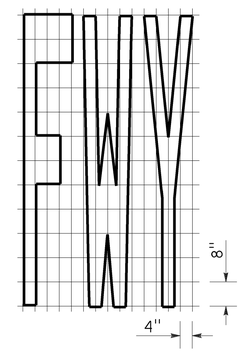

A=16 ft^2

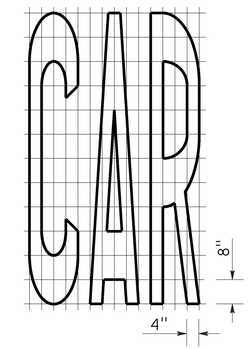

A=17 ft^2

WORD MARKINGS			
ITEM	ft^2	ITEM	ft^2
LANE	24	NO	14
POOL	23	BIKE	21
CAR	17	BUS	20
CLEAR	27	ONLY	22
KEEP	24	FWY	16

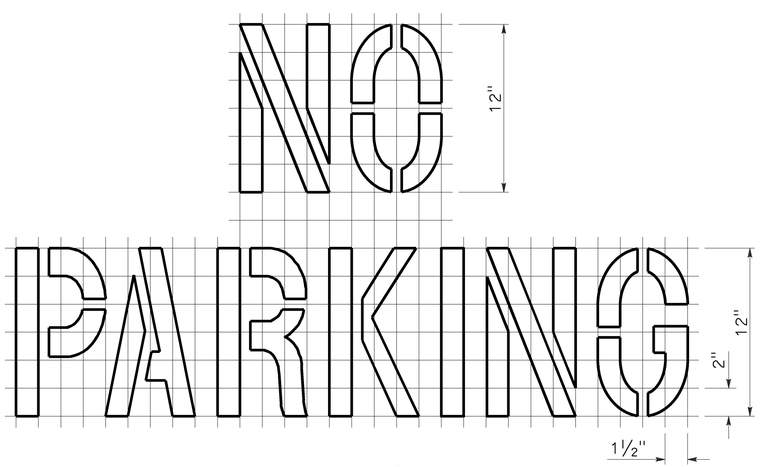

A=2 ft^2
See Notes 6 and 7

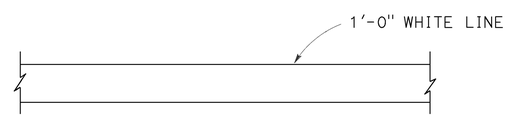

LIMIT LINE (STOP LINE)

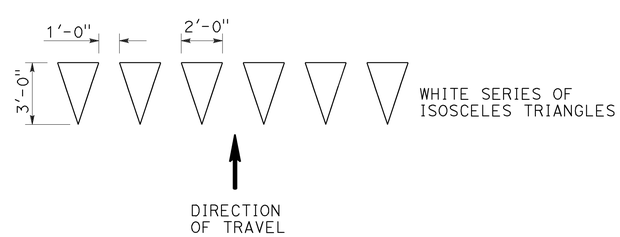

YIELD LINE

NOTES:

1. If a message consists of more than one word, it should read "UP", i.e., the first word should be nearest the driver.
2. The space between words should be at least four times the height of the characters for low speed roads, but not more than ten times the height of the characters. The space may be reduced appropriately where there is limited space because of local conditions.
3. Minor variations in dimensions may be accepted by the Engineer.
4. Portions of a letter, number or symbol may be separated by connecting segments not to exceed 2" in width.
5. The words "NO PARKING" pavement marking is to be used for parking facilities. For typical locations of markings, see Standard Plans A90A and A90B.
6. The words "NO PARKING", shall be painted in white letters no less than 1'-0" high on a contrasting background and located so that it is visible to traffic enforcement officials.

STATE OF CALIFORNIA
DEPARTMENT OF TRANSPORTATION

PAVEMENT MARKINGS WORDS, LIMIT AND YIELD LINES

NO SCALE

RSP A24E DATED JULY 20, 2012 SUPERSEDES STANDARD PLAN A24E
DATED MAY 20, 2011 - PAGE 17 OF THE STANDARD PLANS BOOK DATED 2010.

REVISED STANDARD PLAN RSP A24E

2010 REVISED STANDARD PLAN RSP A24E

6-12-12

Dist	COUNTY	ROUTE	POST MILES TOTAL PROJECT	SHEET No.	TOTAL SHEETS
07	LA	138	44.9	21	57

REGISTERED CIVIL ENGINEER

July 20, 2012
PLANS APPROVAL DATE

REGISTERED PROFESSIONAL ENGINEER
Roberta L. McLaughlin
No. C40375
Exp. 3-31-13
CIVIL
STATE OF CALIFORNIA

THE STATE OF CALIFORNIA OR ITS OFFICERS OR AGENTS SHALL NOT BE RESPONSIBLE FOR THE ACCURACY OR COMPLETENESS OF SCANNED COPIES OF THIS PLAN SHEET.

TO ACCOMPANY PLANS DATED 3-28-16

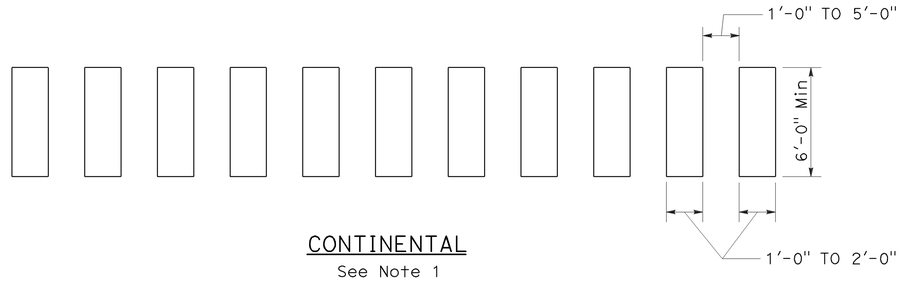

CONTINENTAL
See Note 1

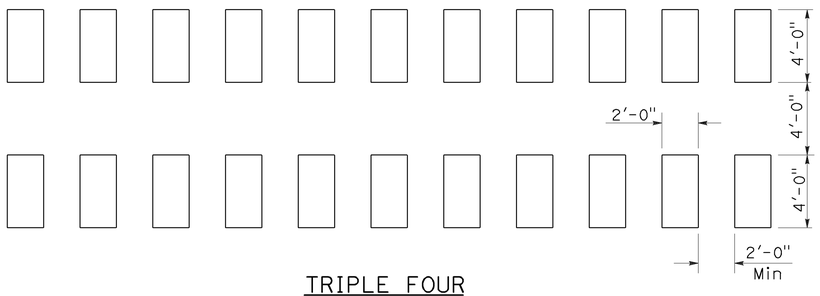

TRIPLE FOUR
See Note 1

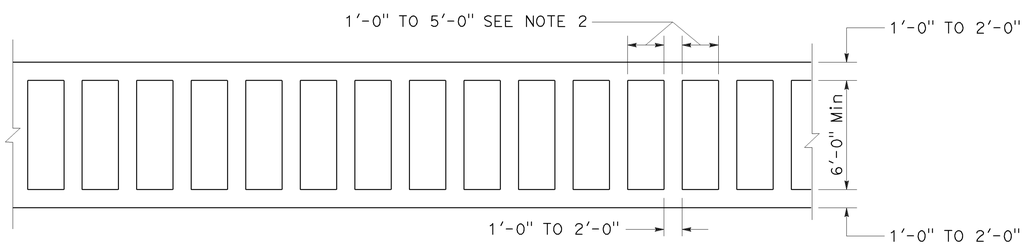

LADDER

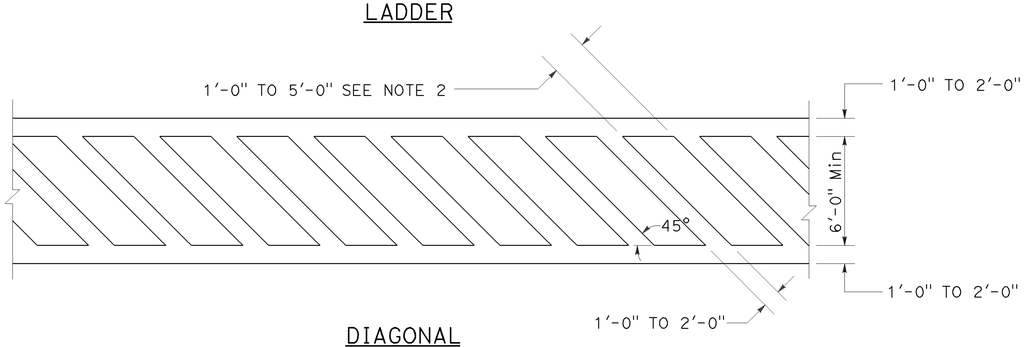

DIAGONAL

HIGHER VISIBILITY CROSSWALKS

NOTES:

1. Spaces between markings should be placed in wheel tracks of each lane.
2. Spacings not to exceed 2.5 times width of longitudinal line.
3. All crosswalk markings must be white except for those near schools must be yellow.

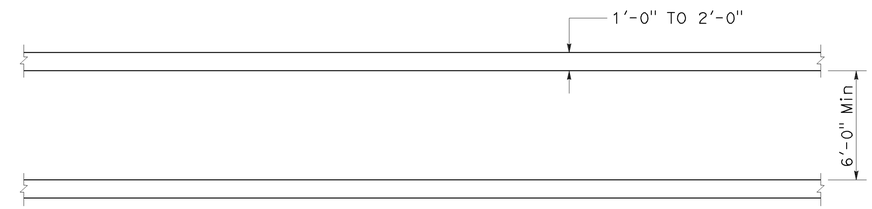

BASIC

STATE OF CALIFORNIA
DEPARTMENT OF TRANSPORTATION

PAVEMENT MARKINGS CROSSWALKS

NO SCALE

RSP A24F DATED JULY 20, 2012 SUPPLEMENTS THE STANDARD PLANS BOOK DATED 2010.

REVISED STANDARD PLAN RSP A24F

2010 REVISED STANDARD PLAN RSP A24F

6-28-12

Dist	COUNTY	ROUTE	POST MILES TOTAL PROJECT	SHEET No.	TOTAL SHEETS
07	LA	138	44.9	22	57

REGISTERED CIVIL ENGINEER

July 19, 2013
PLANS APPROVAL DATE

REGISTERED PROFESSIONAL ENGINEER
Michael Janzen
No. 44788
Exp. 03-31-14
CIVIL
STATE OF CALIFORNIA

THE STATE OF CALIFORNIA OR ITS OFFICERS OR AGENTS SHALL NOT BE RESPONSIBLE FOR THE ACCURACY OR COMPLETENESS OF SCANNED COPIES OF THIS PLAN SHEET.

TO ACCOMPANY PLANS DATED 3-28-16

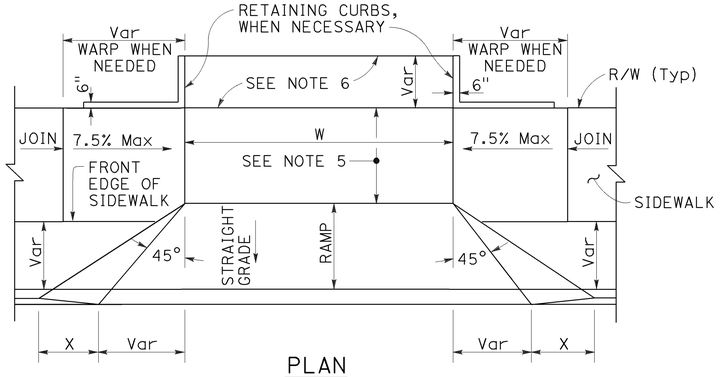

PLAN

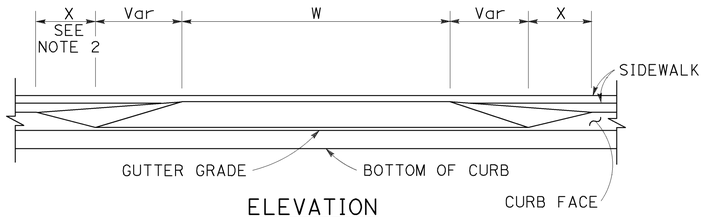

ELEVATION

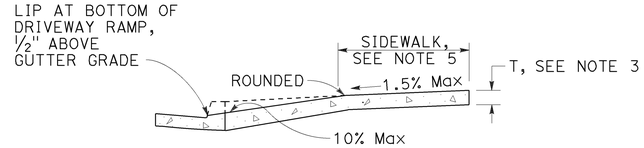

CASE A

Typical driveway, sidewalk not depressed

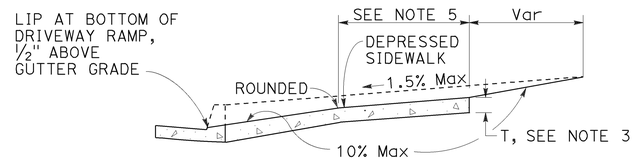

CASE B

Driveway with depressed sidewalk

SECTIONS

DRIVEWAYS

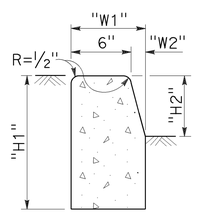

TYPE A1 CURBS

See Table A

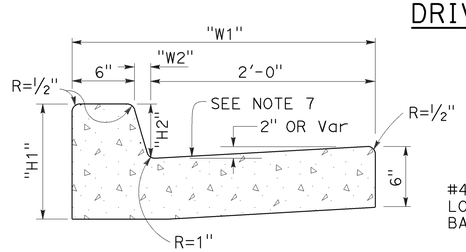

TYPE A2 CURBS

See Table A

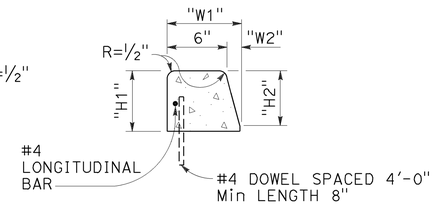

TYPE A3 CURBS

Superimposed on existing pavement
See Table A

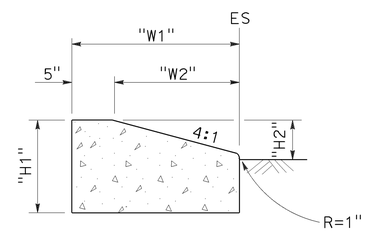

TYPE D CURBS

See Table A

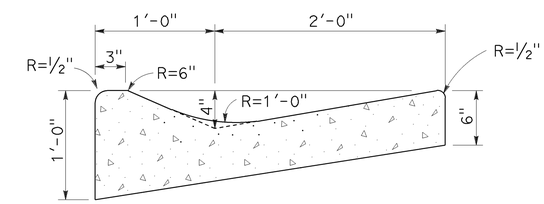

TYPE E CURB

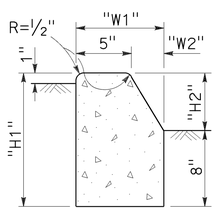

TYPE B1 CURBS

See Table A

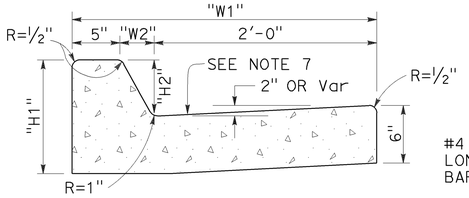

TYPE B2 CURBS

See Table A

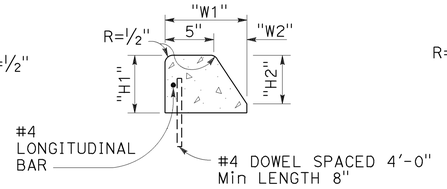

TYPE B3 CURBS

Superimposed on existing pavement
See Table A

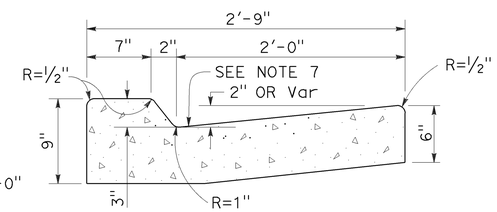

TYPE B4 CURBS

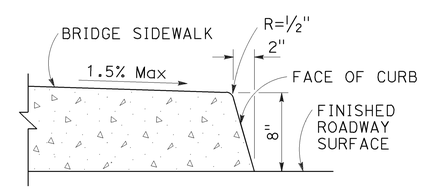

TYPE H CURB

On Bridges

CURBS

TABLE A

CURB TYPE	DIMENSIONS			
	"H1"	"H2"	"W1"	"W2"
A1-6	1'-2"	6"	7½"	1½"
A1-8	1'-4"	8"	8"	2"
A2-6	1'-0"	6"	2'-7½"	1½"
A2-8	1'-2"	8"	2'-8"	2"
A3-6	6"	5"	7¼"	1¼"
A3-8	8"	7"	7¾"	1¾"
B1-4	1'-0"	4"	7½"	2½"
B1-6	1'-2"	6"	9"	4"
B2-4	10"	4"	2'-7½"	2½"
B2-6	1'-0"	6"	2'-9"	4"
B3-4	4"	3"	7"	2"
B3-6	6"	5"	8½"	3½"
D-4	10"	4"	1'-6"	1'-1"
D-6	1'-0"	6"	2'-2"	1'-9"

CURB QUANTITIES

TYPE	CUBIC YARDS PER LINEAR FOOT
A1-6	0.02585
A1-8	0.03084
A2-6	0.05903
A2-8	0.06379
A3-6	0.01036
A3-8	0.01435
B1-4	0.02185
B1-6	0.02930
B2-4	0.05515
B2-6	0.06171
B3-4	0.00641
B3-6	0.01074
B4	0.05709
D-4	0.04083
D-6	0.06804
E	0.06661

NOTES:

1. Case A driveway section typically applies.
2. X=3'-0" except for curb heights over 10" where 4:1 slopes shall be used on curb slope.
3. Sidewalk and ramp thickness "T" at driveway shall be 4" for residental and 6" for commercial.
4. Difference in slope of the driveway ramp and the slope of a line between the gutter and a point on the roadway 5'-0" from gutter line shall not exceed 15%. Reduce driveway ramp slope, not gutter slope, where required.
5. Minimum width of clear passageway for sidewalk shall be 4'-2".
6. Retaining curbs and acquisition of construction easement may be necessary for narrow sidewalks or curb heights in excess of 6".
7. Across the pedestrian route at curb ramp locations, the gutter pan slope shall not exceed 1" of depth for each 2'-0" of width.

STATE OF CALIFORNIA
DEPARTMENT OF TRANSPORTATION

CURBS AND DRIVEWAYS

NO SCALE

RSP A87A DATED JULY 19, 2013 SUPERSEDES STANDARD PLAN A87A
DATED MAY 20, 2011 - PAGE 119 OF THE STANDARD PLANS BOOK DATED 2010.

REVISED STANDARD PLAN RSP A87A

2010 REVISED STANDARD PLAN RSP A87A

7-8-13

Dist	COUNTY	ROUTE	POST MILES TOTAL PROJECT	SHEET No.	TOTAL SHEETS
07	LA	138	44.9	23	57

REGISTERED CIVIL ENGINEER

July 3, 2015
PLANS APPROVAL DATE

REGISTERED PROFESSIONAL ENGINEER Hector David Cordova No. C41957 Exp. 3-31-16 CIVIL STATE OF CALIFORNIA

THE STATE OF CALIFORNIA OR ITS OFFICERS OR AGENTS SHALL NOT BE RESPONSIBLE FOR THE ACCURACY OR COMPLETENESS OF SCANNED COPIES OF THIS PLAN SHEET.

TO ACCOMPANY PLANS DATED 3-28-16

2010 REVISED STANDARD PLAN RSP A88A

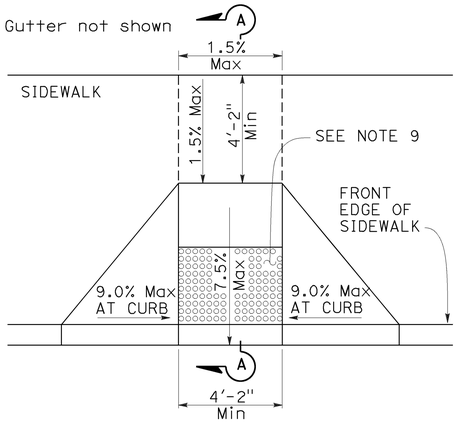

CASE A

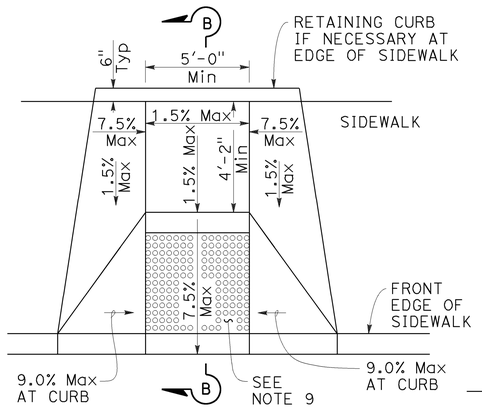

CASE B

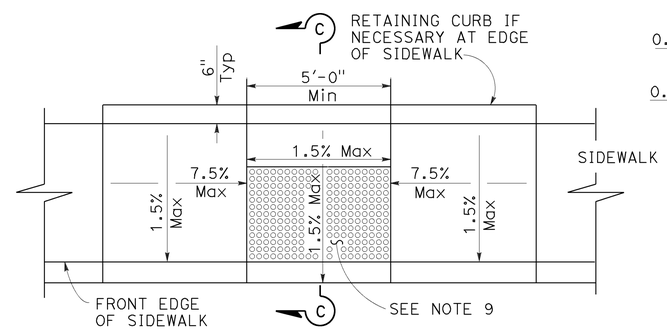

CASE C

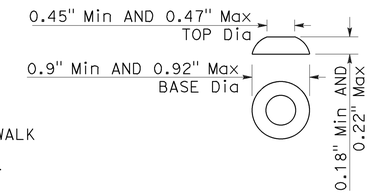

RAISED TRUNCATED DOME

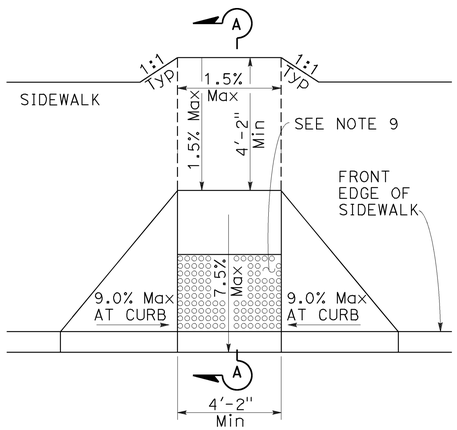

CASE D

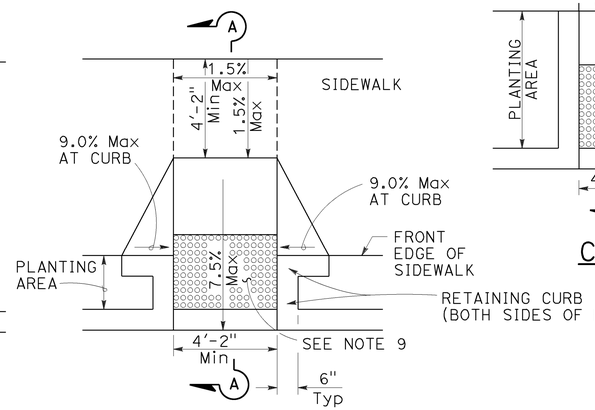

CASE E

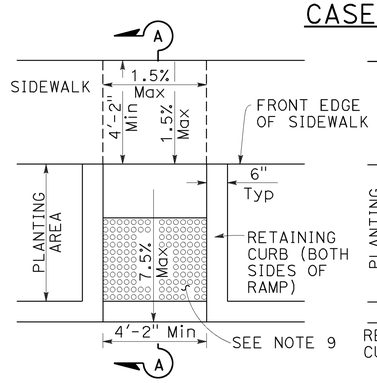

CASE F

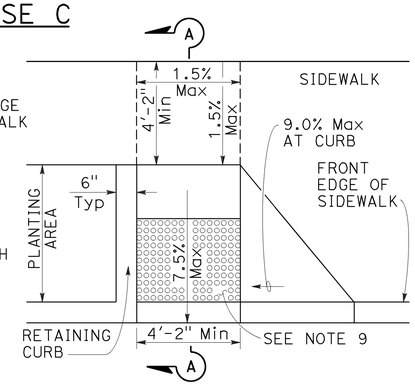

CASE G
See Note 4

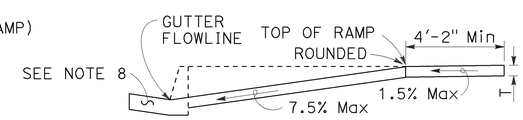

SECTION A-A

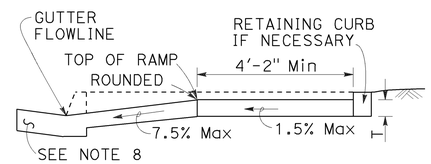

SECTION B-B
Depress entire sidewalk as required

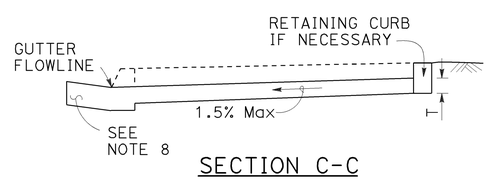

SECTION C-C

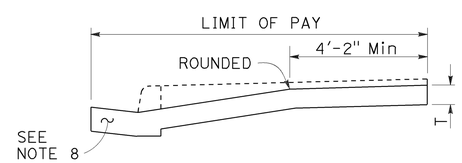

RETROFIT PAY LIMITS
Existing curb and sidewalk

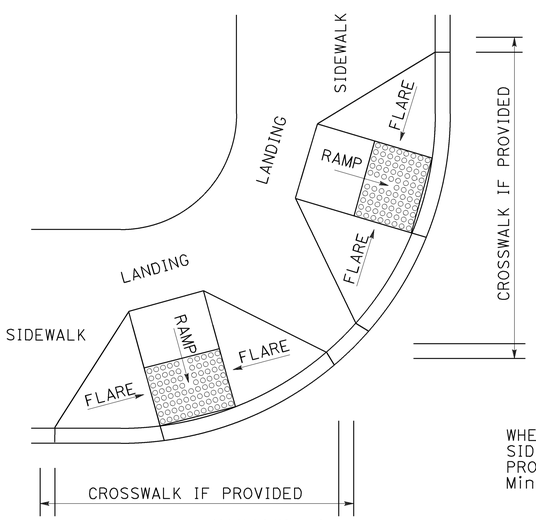

DETAIL A

TYPICAL TWO-RAMP CORNER INSTALLATION

See Note 1

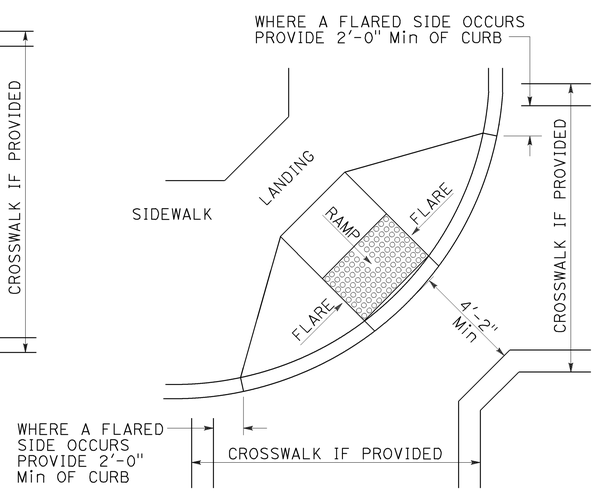

DETAIL B

TYPICAL ONE-RAMP CORNER INSTALLATION

See Notes 1 and 3

NOTES:

1. As site conditions dictate, Case A through Case G curb ramps may be used for corner installations similar to those shown in Detail A and Detail B. The case of curb ramps used in Detail A do not have to be the same. Case A through Case G curb ramps also may be used at mid block locations, as site conditions dictate.
2. If distance from curb to back of sidewalk is too short to accommodate ramp and 4'-2" platform (landing) as shown in Case A, the sidewalk may be depressed longitudinally as in Case B, or C or may be widened as in Case D.
3. When ramp is located in center of curb return, crosswalk configuration must be similar to that shown for Detail B.
4. As site conditions dictate, the retaining curb side and the flared side of the Case G ramp shall be constructed in reversed position.
5. If located on a curve, the sides of the ramp need not be parallel, but the minimum width of the ramp shall be 4'-2".
6. Side slope of ramp flares vary uniformly from a maximum of 9.0% at curb to conform with longitudinal sidewalk slope adjacent to top of the ramp, except in Case C and Case F.
7. Transitions from ramps and landing to walks, gutters or streets shall be flush (no lip) and free of abrupt changes.
8. Counter slopes of adjoining gutters and road surfaces immediately adjacent to and within 24 inches of the curb ramp shall not be steeper than 1:20 (5.0%). Gutter pan slope shall not exceed 1" of depth for each 2'-0" of width.
9. Curb ramps shall have a detectable warning surface that extends the full width and 3'-0" depth of the ramp. A 4'-0" wide detectable warning surface may be used on a 4'-2" wide curb ramp. Detectable Warning Surfaces shall conform to the requirements in the Standard Specifications.
10. Sidewalk and ramp thickness, "T", shall be 3½" minimum.
11. Utility pull boxes, manholes, vaults and all other utility facilities within the boundaries of the curb ramp will be relocated or adjusted to grade by the owner prior to, or in conjunction with, curb ramp construction.
12. Detectable warning surface may have to be cut to allow removal of utility covers while maintaining full detectable warning width and depth.

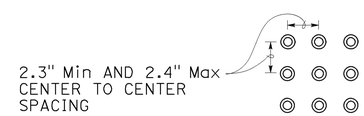

RAISED TRUNCATED DOME PATTERN (IN-LINE)

DETECTABLE WARNING SURFACE

See Note 9

STATE OF CALIFORNIA
DEPARTMENT OF TRANSPORTATION

CURB RAMP DETAILS

NO SCALE

RSP A88A DATED JULY 3, 2015 SUPERSEDES RSP A88A DATED MARCH 21, 2014 AND RSP A88A DATED JULY 19, 2013 AND STANDARD PLAN A88A DATED MAY 20, 2011 - PAGE 121 OF THE STANDARD PLANS BOOK DATED 2010.

REVISED STANDARD PLAN RSP A88A

6-30-15

Dist	COUNTY	ROUTE	POST MILES TOTAL PROJECT	SHEET No.	TOTAL SHEETS
07	LA	138	44.9	24	57

REGISTERED CIVIL ENGINEER

July 19, 2013
PLANS APPROVAL DATE

REGISTERED PROFESSIONAL ENGINEER
Gurinderpal Bhullar
No. C48815
Exp. 9-30-14
CIVIL
STATE OF CALIFORNIA

THE STATE OF CALIFORNIA OR ITS OFFICERS OR AGENTS SHALL NOT BE RESPONSIBLE FOR THE ACCURACY OR COMPLETENESS OF SCANNED COPIES OF THIS PLAN SHEET.

TO ACCOMPANY PLANS DATED 3-28-16

2010 REVISED STANDARD PLAN RSP T9

TABLE 1

TAPER LENGTH CRITERIA AND CHANNELIZING DEVICE SPACING

SPEED (S)	MINIMUM TAPER LENGTH * FOR WIDTH OF OFFSET 12 FEET (W)				MAXIMUM CHANNELIZING DEVICE SPACING		
					X	Y	Z **
	TANGENT 2L	MERGING L	SHIFTING L/2	SHOULDER L/3	TAPER	TANGENT	CONFLICT
mph	ft	ft	ft	ft	ft	ft	ft
20	160	80	40	27	20	40	10
25	250	125	63	42	25	50	12
30	360	180	90	60	30	60	15
35	490	245	123	82	35	70	17
40	640	320	160	107	40	80	20
45	1080	540	270	180	45	90	22
50	1200	600	300	200	50	100	25
55	1320	660	330	220	55	110	27
60	1440	720	360	240	60	120	30
65	1560	780	390	260	65	130	32
70	1680	840	420	280	70	140	35

* - For other offsets, use the following merging taper length formula for L:
For speed of 40 mph or less, $L = WS^2/60$
For speed of 45 mph or more, $L = WS$

Where: L = Taper length in feet
W = Width of offset in feet
S = Posted speed limit, off-peak 85th-percentile speed prior to work starting, or the anticipated operating speed in mph

** - Use for taper and tangent sections where there are no pavement markings or where there is a conflict between existing pavement markings and channelizers (CA).

TABLE 2

LONGITUDINAL BUFFER SPACE AND FLAGGER STATION SPACING

SPEED *	Min D **	DOWNGRADE Min D ***		
		-3%	-6%	-9%
mph	ft	ft	ft	ft
20	115	116	120	126
25	155	158	165	173
30	200	205	215	227
35	250	257	271	287
40	305	315	333	354
45	360	378	400	427
50	425	446	474	507
55	495	520	553	593
60	570	598	638	686
65	645	682	728	785
70	730	771	825	891

* - Speed is posted speed limit, off-peak 85th-percentile speed prior to work starting, or the anticipated operating speed in mph

** - Longitudinal buffer space or flagger station spacing

*** - Use on sustained downgrade steeper than -3 percent and longer than 1 mile.

TABLE 3

ADVANCE WARNING SIGN SPACING

ROAD TYPE	DISTANCE BETWEEN SIGNS *		
	A	B	C
	ft	ft	ft
URBAN - 25 mph OR LESS	100	100	100
URBAN - MORE THAN 25 mph TO 40 mph	250	250	250
URBAN - MORE THAN 40 mph	350	350	350
RURAL	500	500	500
EXPRESSWAY / FREEWAY	1000	1500	2640

* - The distances are approximate, are intended for guidance purposes only, and should be applied with engineering judgment. These distances should be adjusted by the Engineer for field conditions, if necessary, by increasing or decreasing the recommmended distances.

STATE OF CALIFORNIA
DEPARTMENT OF TRANSPORTATION

TRAFFIC CONTROL SYSTEM TABLES FOR LANE AND RAMP CLOSURES

NO SCALE

RSP T9 DATED JULY 19, 2013 SUPERSEDES RSP T9 DATED APRIL 19, 2013 THAT SUPPLEMENTS THE STANDARD PLANS BOOK DATED 2010.

REVISED STANDARD PLAN RSP T9

Dist	COUNTY	ROUTE	POST MILES TOTAL PROJECT	SHEET No.	TOTAL SHEETS
07	LA	138	44.9	25	57

REGISTERED CIVIL ENGINEER

April 19, 2013
PLANS APPROVAL DATE

REGISTERED PROFESSIONAL ENGINEER Gurinderpal Bhullar No. C48815 Exp. 9-30-14 CIVIL STATE OF CALIFORNIA

THE STATE OF CALIFORNIA OR ITS OFFICERS OR AGENTS SHALL NOT BE RESPONSIBLE FOR THE ACCURACY OR COMPLETENESS OF SCANNED COPIES OF THIS PLAN SHEET.

TO ACCOMPANY PLANS DATED 3-28-16

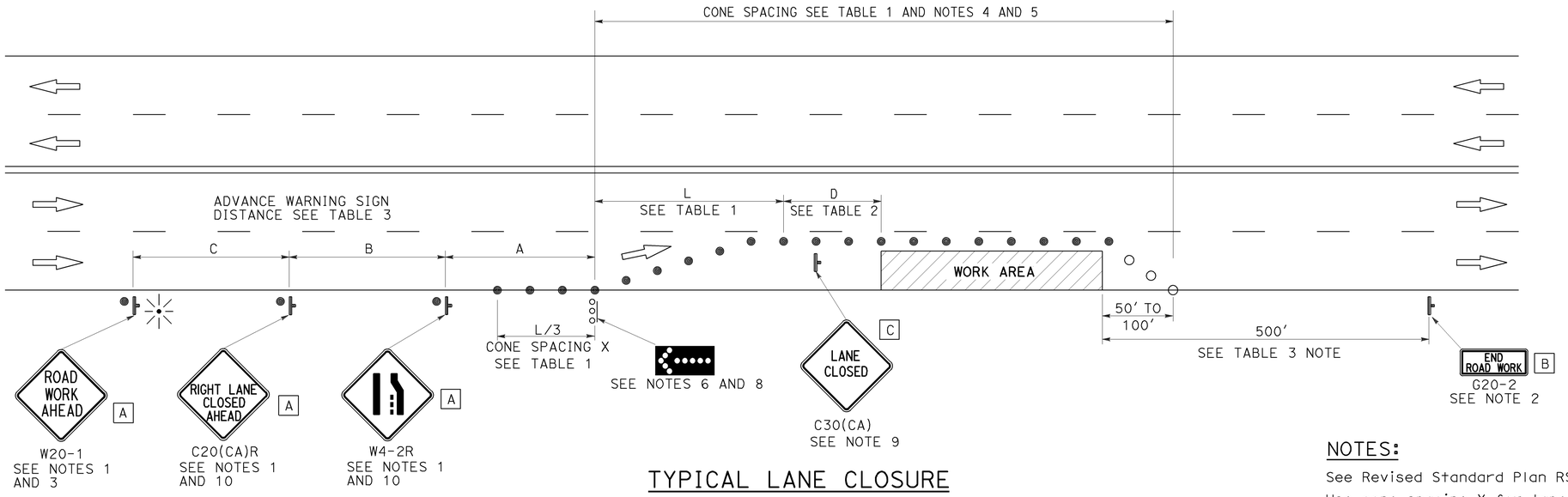

TYPICAL LANE CLOSURE

NOTES:

See Revised Standard Plan RSP T9 for tables.

Use cone spacing X for taper segment, Y for tangent segment or Z for conflict situations, as approriate, per Table 1, unless X, Y, or Z cone spacing is shown on this sheet.

Unless otherwise specified in the special provisions, all temporary warning signs shall have black legend on fluorescent orange background.

California codes are designated by (CA). Otherwise, Federal (MUTCD) codes are shown.

NOTES:

1. Each advance warning sign shall be equipped with at least two flags for daytime closure. Each flag shall be at least 16" x 16" in size and shall be orange or fluorescent red-orange in color. Flashing beacons shall be placed at the locations indicated for lane closure during hours of darkness.
2. A G20-2 "END ROAD WORK" sign, as appropriate, shall be placed at the end of the lane closure unless the end of work area is obvious, or ends within a larger project's limits.
3. If the W20-1 sign would follow within 2000' of a stationary W20-1 or G20-1 "ROAD WORK NEXT _____ MILES", use a C20(CA) sign for the first advance warning sign.
4. All cones used for lane closures during the hours of darkness shall be fitted with retroreflective bands (or sleeves) as specified in the specifications.
5. Portable delineators, placed at one-half the spacing indicated for traffic cones, may be used instead of cones for daytime closures only.
6. Flashing arrow sign shall be either Type I or Type II.
7. For approach speeds over 50 mph, use the "Traffic Control System for Lane Closure On Freeways And Expressways" plan for lane closure details and requirements.
8. A minimum 1500' of sight distance shall be provided where possible for vehicles approaching the first flashing arrow sign. Lane closures shall not begin at the top of crest vertical curve or on a horizontal curve.
9. Place a C30(CA) sign every 2000' throughout length of lane closure.
10. Median lane closures shall conform to the details as shown except that C20(CA)L and W4-2L signs shall be used.
11. At least one person shall be assigned to provide full time maintenance of traffic control devices for lane closure unless, otherwise directed by the Engineer.

LEGEND

- TRAFFIC CONE
- TRAFFIC CONE (OPTIONAL TAPER)
- TEMPORARY TRAFFIC CONTROL SIGN
- FLASHING ARROW SIGN (FAS)
- FAS SUPPORT OR TRAILER
- PORTABLE FLASHING BEACON

SIGN PANEL SIZE (Min)

A	48" x 48"
B	36" x 18"
C	30" x 30"

STATE OF CALIFORNIA
DEPARTMENT OF TRANSPORTATION

TRAFFIC CONTROL SYSTEM FOR LANE CLOSURE ON MULTILANE CONVENTIONAL HIGHWAYS

NO SCALE

RSP T11 DATED APRIL 19, 2013 SUPERSEDES STANDARD PLAN T11 DATED MAY 20, 2011 - PAGE 239 OF THE STANDARD PLANS BOOK DATED 2010.

REVISED STANDARD PLAN RSP T11

2010 REVISED STANDARD PLAN RSP T11

4-2-13

Dist	COUNTY	ROUTE	POST MILES TOTAL PROJECT	SHEET No.	TOTAL SHEETS
07	LA	138	44.9	26	57

REGISTERED CIVIL ENGINEER

April 19, 2013
PLANS APPROVAL DATE

REGISTERED PROFESSIONAL ENGINEER Gurinderpal Bhullar No. C48815 Exp. 9-30-14 CIVIL STATE OF CALIFORNIA

THE STATE OF CALIFORNIA OR ITS OFFICERS OR AGENTS SHALL NOT BE RESPONSIBLE FOR THE ACCURACY OR COMPLETENESS OF SCANNED COPIES OF THIS PLAN SHEET.

TO ACCOMPANY PLANS DATED 3-28-16

LEGEND

- TRAFFIC CONE
- TEMPORARY TRAFFIC CONTROL SIGN
- FLASHING ARROW SIGN (FAS)
- FAS SUPPORT OR TRAILER
- PORTABLE FLASHING BEACON

SIGN PANEL SIZE (Min)

- A 48" x 48"
- B 24" x 24"
- C 36" x 18"

NOTES:

See Revised Standard Plan RSP T9 for tables.

Use cone spacing X for taper segment, Y for tangent segment or Z for conflict situations, as approriate, per Table 1, unless X, Y, or Z cone spacing is shown on this sheet.

Unless otherwise specified in the special provisions, all temporary warning signs shall have black legend on fluorescent orange background.

California codes are designated by (CA). Otherwise, Federal (MUTCD) codes are shown.

TYPICAL HALF ROAD CLOSURE

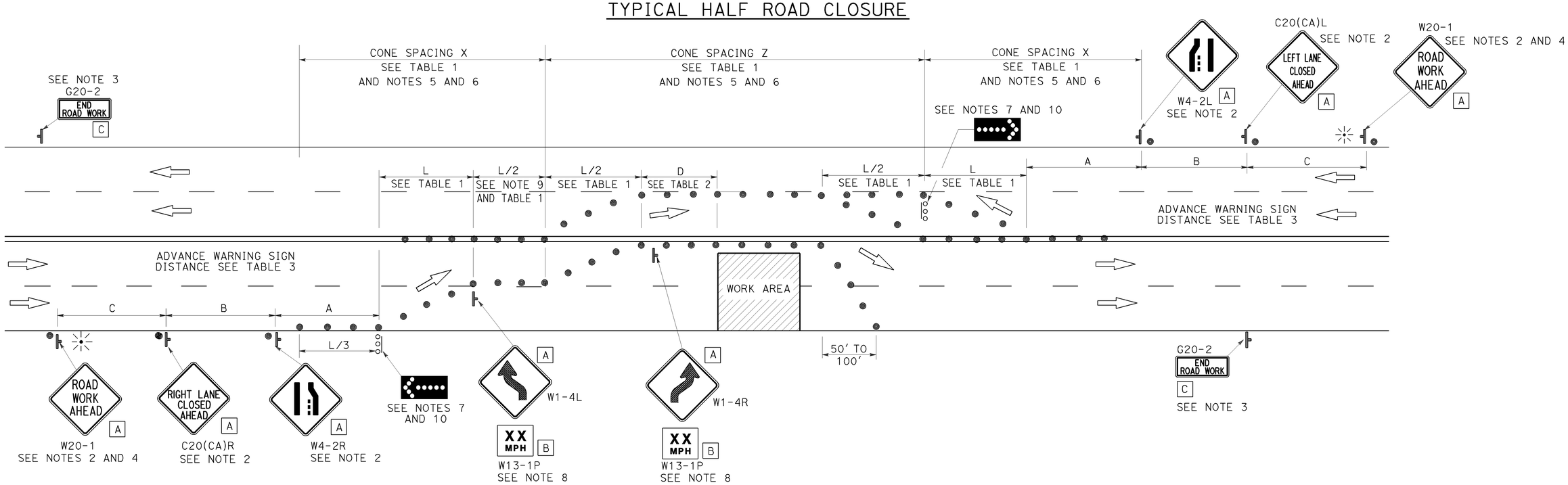

NOTES:

1. At least one person shall be assigned to provide full time maintenance of traffic control devices for lane closure unless, otherwise directed by the Engineer.
2. Each advance warning sign in each direction of travel shall be equipped with at least two flags for daytime closure. Each flag shall be at least 16" x 16" in size and shall be orange or fluorescent red-orange in color. Flashing beacons shall be placed at the locations indicated for lane closure during hours of darkness.
3. A G20-2 "END ROAD WORK" sign, as appropriate, shall be placed at the end of the lane closure unless the end of work area is obvious, or ends within a larger project's limits.
4. If the W20-1 sign would follow within 2000' of a stationary W20-1 or G20-1 "ROAD WORK NEXT _____ MILES", use a C20(CA) sign for the first advance warning sign.
5. All cones used for lane closures during the hours of darkness shall be fitted with retroreflective bands (or sleeves) as specified in the specifications.
6. Portable delineators, placed at one-half the spacing indicated for traffic cones, may be used instead of cones for daytime closures only.
7. Flashing arrow signs shall be either Type I or Type II.
8. Advisory speed will be determined by the Engineer. The W13-1P Plaque will not be required when advisory speed is more than the posted or maximum speed limit.
9. Unless otherwise specified in the special provisions, the tangent (L/2) shall be used.
10. A minimum 1500' of sight distance shall be provided where possible for vehicles approaching the first flashing arrow sign. Lane closures shall not begin at the top of crest vertical curve or on a horizontal curve.

STATE OF CALIFORNIA
DEPARTMENT OF TRANSPORTATION

TRAFFIC CONTROL SYSTEM FOR HALF ROAD CLOSURE ON MULTILANE CONVENTIONAL HIGHWAYS AND EXPRESSWAYS

NO SCALE

RSP T12 DATED APRIL 19, 2013 SUPERSEDES STANDARD PLAN T12
DATED MAY 20, 2011 - PAGE 240 OF THE STANDARD PLANS BOOK DATED 2010.

REVISED STANDARD PLAN RSP T12

2010 REVISED STANDARD PLAN RSP T12

4-2-13

Dist	COUNTY	ROUTE	POST MILES TOTAL PROJECT	SHEET No.	TOTAL SHEETS
07	LA	138	44.9	27	57

Devinder Singh
REGISTERED CIVIL ENGINEER

October 30, 2015
PLANS APPROVAL DATE

REGISTERED PROFESSIONAL ENGINEER
Devinder Singh
No. C50470
Exp. 6-30-17
CIVIL
STATE OF CALIFORNIA

THE STATE OF CALIFORNIA OR ITS OFFICERS OR AGENTS SHALL NOT BE RESPONSIBLE FOR THE ACCURACY OR COMPLETENESS OF SCANNED COPIES OF THIS PLAN SHEET.

TO ACCOMPANY PLANS DATED 3-28-16

2010 REVISED STANDARD PLAN RSP T13

NOTES:

See Revised Standard Plan RSP T9 for tables.

Use cone spacing X for taper segment, Y for tangent segment or Z for conflict situations, as approriate, per Table 1, unless X, Y, or Z cone spacing is shown on this sheet.

Unless otherwise specified in the special provisions, all temporary warning signs shall have black legend on fluorescent orange background.

California codes are designated by (CA). Otherwise, Federal (MUTCD) codes are shown.

TYPICAL LANE CLOSURE WITH REVERSIBLE CONTROL

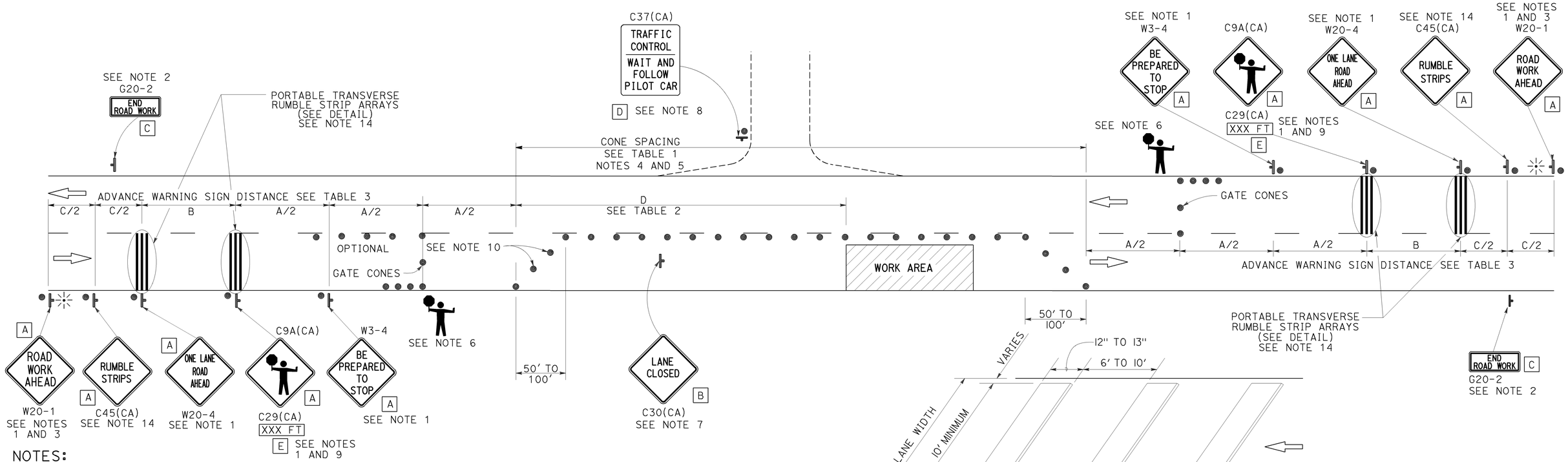

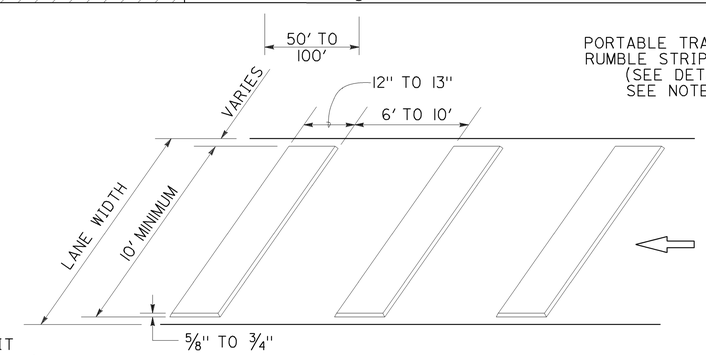

PORTABLE TRANSVERSE RUMBLE STRIP ARRAY DETAIL

NOTES:

1. Each advance warning sign in each direction of travel shall be equipped with at least two flags for daytime closure. Each flag shall be at least 16" x 16" in size and shall be orange or fluorescent red-orange in color. Flashing beacons shall be placed at the locations indicated for lane closure during hours of darkness.
2. A G20-2 "END ROAD WORK" sign, as appropriate, shall be placed at the end of the lane control unless the end of work area is obvious, or ends within a larger project's limits.
3. If the W20-1 sign would follow within 2000' of a stationary W20-1 or G20-1 "ROAD WORK NEXT _____ MILES", use a W20-4 sign for the first advance warning sign.
4. All cones used for lane closures during the hours of darkness shall be fitted with retroreflective bands (or sleeves) as specified in the specifications.
5. Portable delineators, placed at one-half the spacing indicated for traffic cones, may be used instead of cones for daytime closures only.
6. Additional advance flaggers may be required. Flagger should stand in a conspicuous place, be visible to approaching traffic as well as approaching vehicles after the first vehicle has stopped. During the hours of darkness, the flagging-station and flagger shall be illuminated and clearly visible to approaching traffic. The illumination footprint of the lighting on the ground shall be at least 20' in diameter. Place a minimum of four cones at 50' intervals in advance of flagger station as shown.
7. Place C30(CA) "LANE CLOSED" sign at 500' to 1000' intervals throughout extended work areas. They are optional if the work area is visible from the flagger station.
8. When a pilot car is used, place a C37(CA) "TRAFFIC CONTROL-WAIT AND FOLLOW PILOT CAR" sign with black legend on white background at all intersections, driveways and alleys without a flagger within traffic control area. Signs shall be clean and visible at all times. Where traffic can not be effectively self-regulated, at least one flagger shall be used at each intersection within traffic control area.
9. An optional C29(CA) sign may be placed below the C9A(CA) sign.
10. Either traffic cones or barricades shall be placed on the taper. Barricades shall be Type I, II, or III.
11. The color of the portable transverse rumble strips shall be black or orange. Use 2 arrays, each array shall consist of 3 rumble strips.
12. Portable transverse rumble strips shall not be placed on sharp horizontal or vertical curves nor shall they be placed through pedestrian crossings.
13. If the portable transverse rumble strips become out of alignment (skewed) by more than 6 inches, measured from one end to the other, they shall be readjusted to bring the placement back to the original location.
14. Portable transverse rumble strips are not required if any one of the following conditions is satisfied:
    A. Work duration occupies a location for four hours or less
    B. Posted speed limit is below 45 MPH
    C. Work is of emergency nature
    D. Work zone is in snow or icy weather conditions

SIGN PANEL SIZE (Min)

A	48" x 48"
B	30" x 30"
C	36" x 18"
D	36" x 42"
E	20" x 7"

LEGEND

- TRAFFIC CONE
- TEMPORARY TRAFFIC CONTROL SIGN
- PORTABLE FLASHING BEACON
- FLAGGER

STATE OF CALIFORNIA
DEPARTMENT OF TRANSPORTATION

TRAFFIC CONTROL SYSTEM FOR LANE CLOSURE ON TWO LANE CONVENTIONAL HIGHWAYS

NO SCALE

RSP T13 DATED OCTOBER 30, 2015 SUPERSEDES RSP T13 DATED OCTOBER 17, 2014, RSP T13 DATED JULY 18, 2014 AND RSP T13 DATED APRIL 19, 2013 AND STANDARD PLAN T13 DATED MAY 20, 2011 - PAGE 241 OF THE STANDARD PLANS BOOK DATED 2010.

REVISED STANDARD PLAN RSP T13

10-13-15

Dist	COUNTY	ROUTE	POST MILES TOTAL PROJECT	SHEET No.	TOTAL SHEETS
07	LA	138	44.9	28	57

Theresa Gabriel
REGISTERED ELECTRICAL ENGINEER

October 30, 2015
PLANS APPROVAL DATE

REGISTERED PROFESSIONAL ENGINEER Theresa Aziz Gabriel No. E15129 Exp. 6-30-16 ELECTRICAL STATE OF CALIFORNIA

THE STATE OF CALIFORNIA OR ITS OFFICERS OR AGENTS SHALL NOT BE RESPONSIBLE FOR THE ACCURACY OR COMPLETENESS OF SCANNED COPIES OF THIS PLAN SHEET.

TO ACCOMPANY PLANS DATED 3-28-16

LEGEND:

- AB — ABANDON. IF APPLIED TO CONDUIT, REMOVE CONDUCTORS
- BC — INSTALL PULL BOX IN EXISTING CONDUIT RUN
- BP — PEDESTRIAN BARRICADE, TYPE AS INDICATED ON PLAN
- CB — INSTALL CONDUIT INTO EXISTING PULL BOX
- CC — CONNECT NEW AND EXISTING CONDUIT. REMOVE EXISTING CONDUCTORS AND INSTALL CONDUCTORS AS INDICATED
- CF — CONDUIT TO REMAIN FOR FUTURE USE. REMOVE CONDUCTORS. INSTALL PULL TAPE
- DH — DETECTOR HANDHOLE
- FA — FOUNDATION TO BE ABANDONED
- IS — INSTALL SIGN ON SIGNAL MAST ARM
- NS — NO SLIP BASE ON STANDARD
- PEC — PHOTOELECTRIC CONTROL
- PEU — PHOTOELECTRIC UNIT
- RC — EQUIPMENT OR MATERIAL TO BE REMOVED AND BECOME THE PROPERTY OF THE CONTRACTOR
- RE — REMOVE ELECTROLIER, FUSES AND BALLAST. TAPE ENDS OF CONDUCTORS
- RL — RELOCATE EQUIPMENT
- RR — REMOVE AND REUSE EQUIPMENT
- RS — REMOVE AND SALVAGE EQUIPMENT
- SC — SPLICE NEW TO EXISTING CONDUCTORS
- SD — SERVICE DISCONNECT
- TSP — TELEPHONE SERVICE POINT

ABBREVIATIONS

AC+	UNDERGROUNDED CONDUCTOR
APS	ACCESSIBLE PEDESTRIAN SIGNAL
Batt	BATTERY
BBS	BATTERY BACKUP SYSTEM
BC	BOLT CIRCLE
Blk	BLACK
BP	BYPASS
BPB	BICYCLE PUSH BUTTON
C	CONDUIT
CB	CIRCUIT BREAKER
CCTV	CLOSED CIRCUIT TELEVISION
Ckt	CIRCUIT
CMS	CHANGEABLE MESSAGE SIGN
Ctid	CALTRANS IDENTIFICATION
Comm	COMMUNICATION
Cntl	CONTROL
DF	DEPARTMENT-FURNISHED
DLC	LOOP DETECTOR LEAD-IN CABLE
EMS	EXTINGUISHABLE MESSAGE SIGN
EVUC	EMERGENCY VEHICLE UNIT CABLE
EVUD	EMERGENCY VEHICLE UNIT DETECTOR
FB	FLASHING BEACON
FBCA	FLASHING BEACON CONTROL ASSEMBLY
FBS	FLASHING BEACON WITH SLIP BASE
FO	FIBER OPTIC
G	EQUIPMENT GROUNDING CONDUCTOR
GB	GROUND BUS
GFCI	GROUND FAULT CIRCUIT INTERRUPTER
Grn	GREEN
HAR	HIGHWAY ADVISORY RADIO
Hex	HEXAGONAL
HPS	HIGH PRESSURE SODIUM
IISNS	INTERNALLY ILLUMINATED STREET NAME SIGN
ISL	INDUCTION SIGN LIGHTING
LED	LIGHT EMITTING DIODE
LMA	LUMINAIRE MAST ARM
LPS	LOW PRESSURE SODIUM
Ltg	LIGHTING
Lum	LUMINAIRE
M	METERED
MAT	MAST ARM MOUNTING TOP ATTACHMENT
MAS	MAST ARM MOUNTING SIDE ATTACHMENT
MBPS	MANUAL BYPASS SWITCH
M/M	MULTIPLE TO MULTIPLE TRANSFORMER
Mtg	MOUNTING
MV	MERCURY VAPOR LIGHTING FIXTURE
MVDS	MICROWAVE VEHICLE DETECTION SYSTEM
N	NEUTRAL (GROUNDED CONDUCTOR)
NB	NEUTRAL BUS
NC	NORMALLY CLOSE
NO	NORMALLY OPEN
P	CIRCUIT BREAKER'S POLE
PB	PULL BOX
PBA	PUSH BUTTON ASSEMBLY
PEC	PHOTOELECTRIC CONTROL
Ped	PEDESTRIAN
PEU	PHOTOELECTRIC UNIT
PT	CONDUIT WITH PULL TAPE
PTR	POWER TRANSFER RELAY
RE	RELOCATED EQUIPMENT
RM	RAMP METERING
RWIS	ROADSIDE WEATHER INFORMATION SYSTEM
SB	SLIP BASE
SIC	SIGNAL INTERCONNECT CABLE
Sig	SIGNAL
SMA	SIGNAL MAST ARM
SNS	STREET NAME SIGN
SP	SERVICE POINT
TB	TERMINAL BOARD
TDC	TELEPHONE DEMARCATION CABINET
Temp	TEMPERATURE
TMS	TRAFFIC MONITORING STATION
TOS	TRAFFIC OPERATIONS SYSTEM
UPS	UNINTERRUPTABLE POWER SUPPLY
UPSC	UNINTERRUPTABLE POWER SUPPLY CONTROLLER
Veh	VEHICLE
VIVDS	VIDEO IMAGE VEHICLE DETECTION SYSTEM
Wht	WHITE
WIM	WEIGH-IN-MOTION
Xfmr	TRANSFORMER

SOFFIT AND WALL-MOUNTED LUMINAIRES

- PENDANT SOFFIT LUMINAIRE, 70 W HPS UNLESS OTHERWISE SPECIFIED
- FLUSH-MOUNTED SOFFIT LUMINAIRE, 70 W HPS UNLESS OTHERWISE SPECIFIED
- WALL-MOUNTED LUMINAIRE, 70 W HPS UNLESS OTHERWISE SPECIFIED
- EXISTING SOFFIT OR WALL-MOUNTED LUMINAIRE TO REMAIN UNMODIFIED
- (M) EXISTING SOFFIT OR WALL-MOUNTED LUMINAIRE TO BE MODIFIED AS SPECIFIED

NOTE:
Arrow indicates "street side" of luminaire.

COMMONLY USED SYMBOLS FOR UNITED STATES CUSTOMARY UNITS OF MEASUREMENT:

SYMBOL	DEFINITIONS
Ω	OHMS
min	MINUTE
s	SECOND
bps	BITS PER SECOND
Bps	BYTES PER SECOND
A	AMPERE
V	VOLT
V(dc)	VOLT (DIRECT CURRENT)
V(ac)	VOLT (ALTERNATING CURRENT)
FC	FOOT - CANDLE
W	WATTS
VA	VOLT-AMPERE
M	MEGA
k	KILO
m	MILLI
μ	MICRO
P	PICO
Hz	HERTZ

MISCELLANEOUS ELECTROLIERS

NEW	EXISTING	
		LUMINAIRE ON WOOD POLE
		NON-STANDARD ELECTROLIER (SEE PROJECT LEGEND)
		CITY ELECTROLIER
		ELECTROLIER FOUNDATION (FUTURE INSTALLATION)

NOTES:

1. LED luminaires shall be 235 W when installed on Type 21, 21D, 30, 31 and 32 Standards, unless otherwise specified. LED luminaires shall be 165 W when installed on other type standards or poles, unless otherwise specified.
2. Luminaires shall be the cutoff type, ANSI Type III medium cutoff lighting distribution, unless otherwise specified.

STANDARD ELECTROLIER

NEW	EXISTING	STANDARD TYPE
		15
		15D
		15 STRUCTURE
		15D STRUCTURE
		21
		21D
		21 STRUCTURE
		21D STRUCTURE
		30
		31
		32

STATE OF CALIFORNIA
DEPARTMENT OF TRANSPORTATION

ELECTRICAL SYSTEMS (LEGEND AND ABBREVIATIONS)

NO SCALE

RSP ES-1A DATED OCTOBER 30, 2015 SUPERSEDES RSP ES-1A DATED JULY 19, 2013 AND STANDARD PLAN ES-1A DATED MAY 20, 2011 - PAGE 425 OF THE STANDARD PLANS BOOK DATED 2010.

REVISED STANDARD PLAN RSP ES-1A

2010 REVISED STANDARD PLAN RSP ES-1A

9-29-15

Dist	COUNTY	ROUTE	POST MILES TOTAL PROJECT	SHEET No.	TOTAL SHEETS
07	LA	138	44.9	29	57

Theresa Gabriel
REGISTERED ELECTRICAL ENGINEER

October 30, 2015
PLANS APPROVAL DATE

REGISTERED PROFESSIONAL ENGINEER
Theresa Aziz Gabriel
No. E15129
Exp. 6-30-16
ELECTRICAL
STATE OF CALIFORNIA

THE STATE OF CALIFORNIA OR ITS OFFICERS OR AGENTS SHALL NOT BE RESPONSIBLE FOR THE ACCURACY OR COMPLETENESS OF SCANNED COPIES OF THIS PLAN SHEET.

TO ACCOMPANY PLANS DATED 3-28-16

CONDUIT

NEW	EXISTING	
		LIGHTING CONDUIT, UNLESS OTHERWISE INDICATED OR NOTED
		TRAFFIC SIGNAL CONDUIT
C	c	COMMUNICATION CONDUIT
T	t	TELEPHONE CONDUIT
F	f	FIRE ALARM CONDUIT
FO	fo	FIBER OPTIC CONDUIT
		CONDUIT TERMINATION
R	r	CONDUIT RISER ATTACHED TO THE STRUCTURE OR SERVICE POLE

SERVICE EQUIPMENT

NEW	EXISTING	
OH	oh	OVERHEAD LINES
U	U	WOOD POLE, "U" INDICATES UTILITY OWNED
		POLE GUY WITH ANCHOR
		UTILITY TRANSFORMER - GROUND MOUNTED
III	III	SERVICE EQUIPMENT ENCLOSURE TYPE. DOOR INDICATES FRONT OF ENCLOSURE
T	t	TELEPHONE DEMARCATION CABINET

POLE-MOUNTED SERVICE DESIGNATION

TYPE H SERVICE, 28'-10" — TYPE OF INSTALLATION AND POLE HEIGHT ABOVE GRADE

FLASHING BEACON

NEW	EXISTING	
R	R	FLASHING BEACON (ONE VEHICLE SIGNAL HEAD WITH BACKPLATE AND VISOR) "R" INDICATES RED INDICATION, "Y" INDICATES YELLOW INDICATION
Y Y	Y Y	FLASHING BEACON WITH TYPE 15-FBS STANDARD AND A SIGN.
R R	R R	FLASHING BEACON WITH TYPES 9, 9A OR 9B SIGN UNLESS OTHERWISE SPECIFIED OR INDICATED

SIGNAL EQUIPMENT

NEW	EXISTING	
		PEDESTRIAN SIGNAL HEAD
		PUSH BUTTON ASSEMBLY POST
		PEDESTRIAN BARRICADE
		VEHICLE SIGNAL HEAD (WITH BACKPLATE AND 3-SECTIONS: RED, YELLOW AND GREEN)
		VEHICLE SIGNAL HEAD WITH ANGLE VISOR
PV	PV	MODIFICATIONS OF BASIC SYMBOL: "L" INDICATES ALL NON-ARROW SECTIONS LOUVERED "LG" INDICATES LOUVERED GREEN SECTION ONLY "PV" INDICATES ALL 12" SECTIONS PROGRAMMED VISIBILITY "8" INDICATES ALL 8" SECTIONS (ONLY WHEN SPECIFIED)
		VEHICLE SIGNAL HEAD CONSISTING OF RED, YELLOW AND GREEN LEFT ARROW SECTIONS
		VEHICLE SIGNAL HEAD CONSISTING OF RED AND YELLOW SECTIONS WITH AN UP GREEN ARROW SECTION
		VEHICLE SIGNAL HEAD (5 SECTION) CONSISTING OF RED, YELLOW AND GREEN SECTIONS WITH YELLOW AND GREEN RIGHT ARROW SECTIONS
		TYPE 15TS STANDARD WITH VEHICLE SIGNAL HEAD AND LUMINAIRE
		TYPE 21TS STANDARD WITH VEHICLE SIGNAL HEAD AND LUMINAIRE
		STANDARD WITH LUMINAIRE AND SIGNAL MAST ARMS AND ATTACHED VEHICLE SIGNAL HEADS
		TYPE 1 STANDARD WITH ATTACHED VEHICLE SIGNAL HEADS
		STANDARD WITH A SIGNAL MAST ARM, ATTACHED VEHICLE SIGNAL HEADS AND INTERNALLY ILLUMINATED STREET NAME SIGN
		CONTROLLER ASSEMBLY. DOOR INDICATES FRONT OF CABINET

SIGNAL EQUIPMENT Cont

NEW	EXISTING	
		GUARD POST
		TYPE 1 STANDARD WITH RAMP METERING SIGN
		OPTICAL DETECTOR FOR THE EMERGENCY VEHICLE DETECTION

NOTES:

1. All signal sections shall be 12" unless shown otherwise.
2. Signal heads shall be provided with backplates unless shown otherwise.

ILLUMINATED OVERHEAD SIGN

NEW	EXISTING	
		SINGLE POST, SINGLE ILLUMINATED SIGN, BALANCED BUTTERFLY
		SINGLE POST, DOUBLE ILLUMINATED SIGN, BALANCED BUTTERFLY
		SINGLE POST, SINGLE ILLUMINATED SIGN, FULL CANTILEVER
		DOUBLE POST, SINGLE ILLUMINATED SIGN
		SINGLE ILLUMINATED SIGN MOUNTED ON STRUCTURE
		DOUBLE POST, SINGLE ILLUMINATED SIGN WITH ELECTROLIER

STATE OF CALIFORNIA
DEPARTMENT OF TRANSPORTATION

ELECTRICAL SYSTEMS (LEGEND AND ABBREVIATIONS)

NO SCALE

RSP ES-1B DATED OCTOBER 30, 2015 SUPERSEDES RSP ES-1B DATED JULY 19, 2013 AND STANDARD PLAN ES-1B DATED MAY 20, 2011 - PAGE 426 OF THE STANDARD PLANS BOOK DATED 2010.

REVISED STANDARD PLAN RSP ES-1B

2010 REVISED STANDARD PLAN RSP ES-1B

8-19-15

Dist	COUNTY	ROUTE	POST MILES TOTAL PROJECT	SHEET No.	TOTAL SHEETS
07	LA	138	44.9	30	57

Theresa Gabriel
REGISTERED ELECTRICAL ENGINEER

October 30, 2015
PLANS APPROVAL DATE

REGISTERED PROFESSIONAL ENGINEER
Theresa Aziz Gabriel
No. E15129
Exp. 6-30-16
ELECTRICAL
STATE OF CALIFORNIA

THE STATE OF CALIFORNIA OR ITS OFFICERS OR AGENTS SHALL NOT BE RESPONSIBLE FOR THE ACCURACY OR COMPLETENESS OF SCANNED COPIES OF THIS PLAN SHEET.

TO ACCOMPANY PLANS DATED 3-28-16

EQUIPMENT IDENTIFICATION

ILLUMINATED SIGN IDENTIFICATION NUMBER:

SIGN No. 12345
10 ISL SCI 1.0

- SIGN NUMBER - PLACE ON POST OR STRUCTURE
- TRANSFORMER RATING (kVA)
- LIGHTING CONTROL TYPE
- NUMBER AND TYPE OF FIXTURES

} DO NOT PLACE ON STANDARD OR STRUCTURE

ELECTROLIER OR EQUIPMENT IDENTIFICATION NUMBER:

12345 - 15'-0"

- MAST ARM LENGTH, IF SHOWN. DO NOT PLACE ON STANDARD OR STRUCTURE
- EQUIPMENT NUMBER - PLACE ON STANDARD OR STRUCTURE. EXISTING EQUIPMENT NUMBERS ARE SHOWN IN PARENTHESIS

CONDUIT AND CONDUCTOR IDENTIFICATION:

1½"C, 2#10, 15#14, 2 DLC, 12P#18 (PAIR)

- NUMBER AND SIZE OF CONDUCTORS AND CABLES
- SIZE OF CONDUIT IN INCHES

ø1, ø2, ø2P, etc.	TRAFFIC PHASE IDENTIFICATION FOR SIGNALS, DETECTORS AND PHASE DIAGRAMS
1 2 3	LEGEND NUMBERS
A B C	EQUIPMENT, SIGNAL POLES, INSTALLATION OR ITEMS
1 2 3	CONDUIT RUN NUMBERS

SIGNAL AND LIGHTING STANDARD (TYPICAL DESIGNATION):

19A - 3 - 100

- WIND VELOCITY = 100 mph
- CASE 3 ARM LOADING
- STANDARD TYPE
- STANDARD PLAN SHEET NUMBER
- DETAIL, NUMBER, SECTION, TYPE OR ELEVATION

MISCELLANEOUS EQUIPMENT

NEW	EXISTING	
CMS	cms	CHANGEABLE MESSAGE SIGN
		CLOSED CIRCUIT TELEVISION CAMERA
		HIGHWAY ADVISORY RADIO POLE AND ANTENNA
EMS	ems	LED EXTINGUISHABLE MESSAGE SIGN
M V	m v	DETECTION DEVICE M = MICROWAVE SENSOR V = VIDEO IMAGE SENSOR

WIRING DIAGRAM LEGEND

- EXTERNAL CONDUCTOR
- CONDUCTOR OR BUS
- TIE POINT
- CONTACTOR COIL
- CONTACTOR, NO CONTACT
- TERMINAL BLOCKS
- CONTACTOR, NC CONTACT
- ENCLOSURE BOND
- GROUNDING ELECTRODE
- CIRCUIT BREAKER
- RECEPTACLE

PULL BOXES

NEW	EXISTING	
		PULL BOX, No. 5 UNLESS OTHERWISE INDICATED OR NOTED
3	9A(21)	PULL BOX, ADDITIONAL DESIGNATIONS OR DESCRIPTIONS

3 No. 3½ PULL BOX
5 No. 5 PULL BOX
6 No. 6 PULL BOX
7 No. 7 (CEILING PULL BOX)
8 No. 8 (PENDANT SOFFIT PULL BOX)
9 No. 9 PULL BOX
9A No. 9A PULL BOX

(C) COMMUNICATIONS PULL BOX
(E) PULL BOX WITH EXTENSION
(S) SPRINKLER CONTROL PULL BOX
(21) ANCHOR BOLTS AND CONDUIT FOR FUTURE INSTALLATION OF TYPE 21 STANDARD
(T) TRAFFIC PULL BOX

VEHICLE DETECTORS

5 J 9 U

- VEHICLE DETECTOR DESIGNATION
- U = UPPER
  L = LOWER
- SLOT NUMBER IN INPUT FILE
- INPUT FILE (I OR J)
- PHASE

NEW	EXISTING	
		TYPE A LOOP DETECTOR. OUTLINE OF SAWCUT SHOWN
		TYPE B LOOP DETECTOR. OUTLINE OF SAWCUT SHOWN
		TYPE C LOOP DETECTOR. OUTLINE OF SAWCUT SHOWN
		TYPE D LOOP DETECTOR. OUTLINE OF SAWCUT SHOWN
		TYPE E LOOP DETECTOR. OUTLINE OF SAWCUT SHOWN
		TYPE Q LOOP DETECTOR. OUTLINE OF SAWCUT SHOWN
DH	dh	DETECTOR HANDHOLE
		MICROWAVE OR VIDEO DETECTION ZONE

STATE OF CALIFORNIA
DEPARTMENT OF TRANSPORTATION

ELECTRICAL SYSTEMS (LEGEND AND ABBREVIATIONS)

NO SCALE

RSP ES-1C DATED OCTOBER 30, 2015 SUPERSEDES RSP ES-1C DATED JULY 19, 2013 AND STANDARD PLAN ES-1C DATED MAY 20, 2011 - PAGE 427 OF THE STANDARD PLANS BOOK DATED 2010.

REVISED STANDARD PLAN RSP ES-1C

2010 REVISED STANDARD PLAN RSP ES-1C

8-19-15

Dist	COUNTY	ROUTE	POST MILES TOTAL PROJECT	SHEET No.	TOTAL SHEETS
07	LA	138	44.9	31	57

Theresa Gabriel
REGISTERED ELECTRICAL ENGINEER

October 30, 2015
PLANS APPROVAL DATE

REGISTERED PROFESSIONAL ENGINEER Theresa Aziz Gabriel No. E15129 Exp. 6-30-16 ELECTRICAL STATE OF CALIFORNIA

THE STATE OF CALIFORNIA OR ITS OFFICERS OR AGENTS SHALL NOT BE RESPONSIBLE FOR THE ACCURACY OR COMPLETENESS OF SCANNED COPIES OF THIS PLAN SHEET.

TO ACCOMPANY PLANS DATED 3-28-16

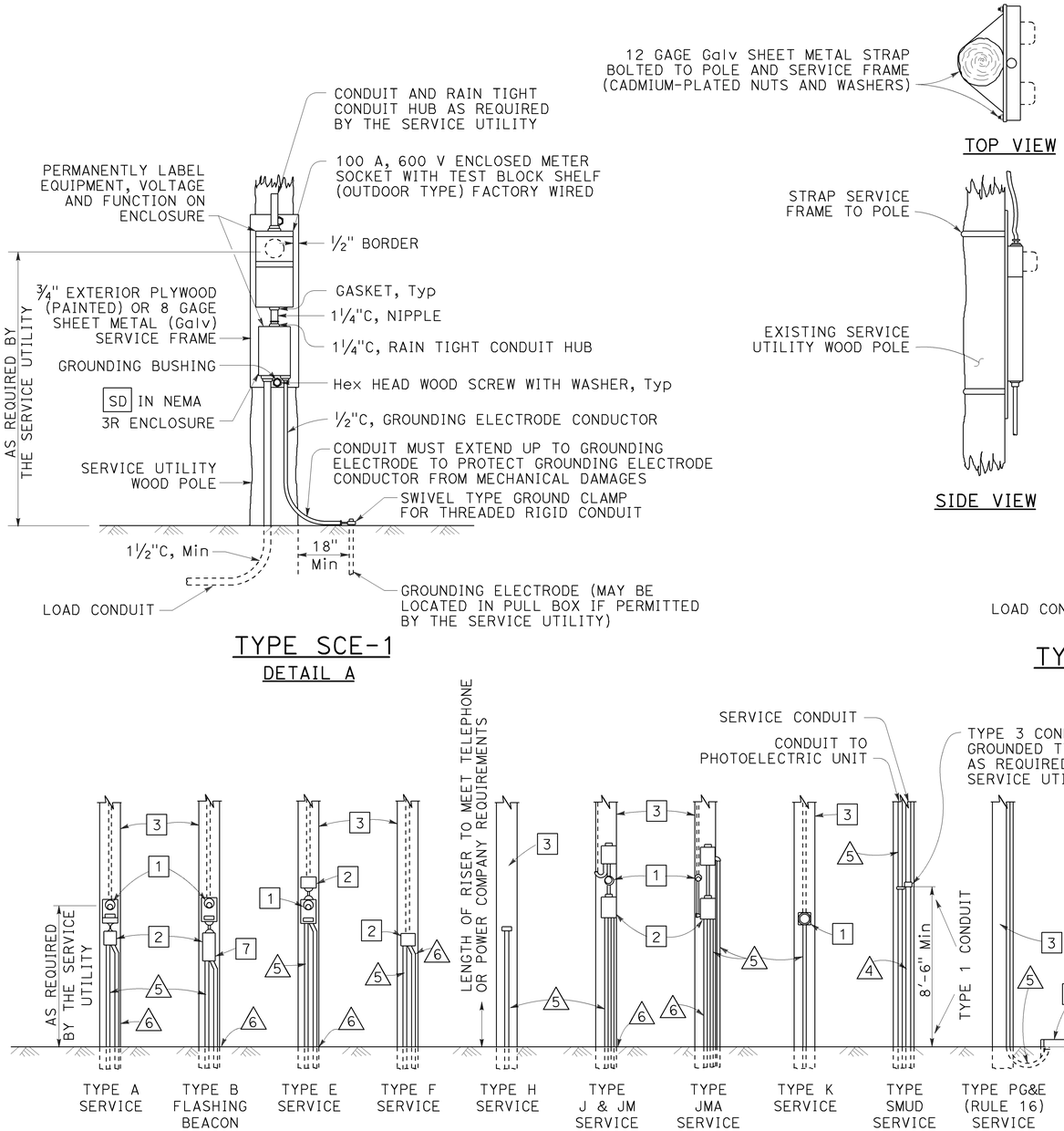

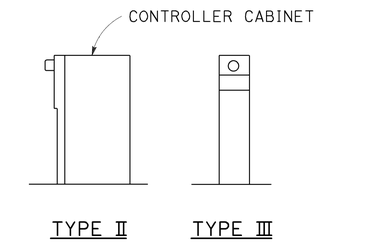

TYPE OF SERVICE (TYPICAL)
DETAIL C
See Notes 1 and 2

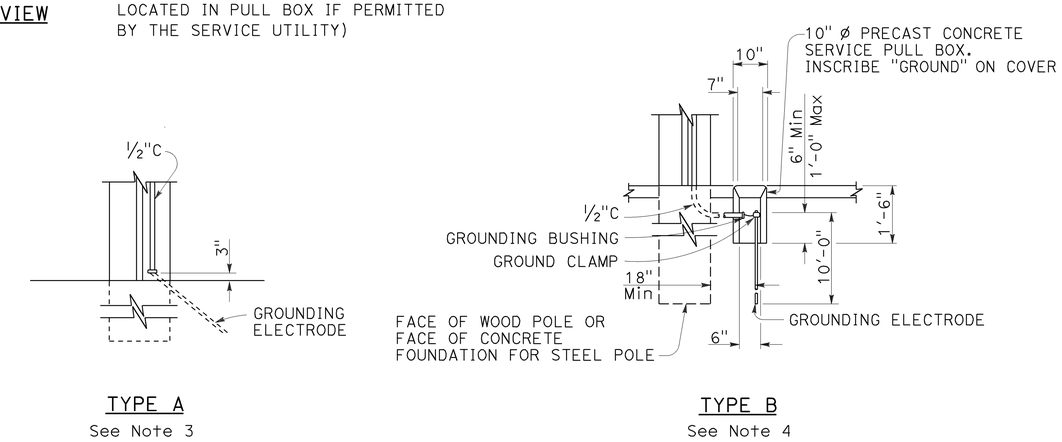

SERVICE GROUNDING
DETAIL E

LEGEND:

1. METER SOCKET.
2. SERVICE ENCLOSURE WITH A MINIMUM 60 A RATED MAIN CIRCUIT BREAKER, UNLESS OTHERWISE SHOWN.
3. A. UTILITY OWNED POLE. THE SERVICE UTILITY WILL FURNISH AND INSTALL REQUIRED SERVICE RISER, PEU WITH CONDUCTORS AND OTHER EQUIPMENT AS NEEDED.
   B. STATE OWNED POLE. THE CONTRACTOR SHALL FURNISH AND INSTALL REQUIRED SERVICE RISER AND EQUIPMENT.
4. 2"C, SERVICE CONDUIT MUST HAVE A GROUNDED TYPE BUSHING INSTALLED AT UPPER END OF THE METALLIC POLE RISER CONDUIT. A GROUNDING CONDUCTOR MUST BE ATTACHED TO THE BUSHING, CARRIED THROUGH THE CONDUIT RUN AND ATTACHED TO THE SERVICE EQUIPMENT ENCLOSURE'S GROUNDING ELECTRODE.
5. CONDUIT, LENGTH AND SIZE AS REQUIRED.
6. ½"C, 1#6. SEE DETAIL E.
7. FLASHING BEACON CONTROL ASSEMBLY.
8. SERVICE PULL BOX, No. 5 UNLESS OTHERWISE NOTED, FURNISHED AND INSTALLED BY THE CONTRACTOR. SERVICE UTILITY SHALL DETERMINE THE EXACT LOCATION.

POLE MOUNTED SERVICE INSTALLATIONS
DETAIL D

NOTES:

1. Type II service equipment enclosure mounted on the side of a controller cabinet.
2. Type III complete free-standing service equipment enclosure.
3. Ground clamp and required fittings must be accessible. Conduit must extend to protect grounding electrode conductor from mechanical damage.
4. Use where service utility requires 18" clearance between grounding electrode and the pole or service equipment enclosure. Installation shown is for sidewalk or paved areas. In unpaved areas, omit special service pull box and locate ground clamp above ground or locate ground clamp in nearest pull box.

STATE OF CALIFORNIA
DEPARTMENT OF TRANSPORTATION

ELECTRICAL SYSTEMS (SERVICE EQUIPMENT)

NO SCALE

RSP ES-2A DATED OCTOBER 30, 2015 SUPERSEDES STANDARD PLAN ES-2A DATED MAY 20, 2011 - PAGE 428 OF THE STANDARD PLANS BOOK DATED 2010.

REVISED STANDARD PLAN RSP ES-2A

2010 REVISED STANDARD PLAN RSP ES-2A

8-20-15

Dist	COUNTY	ROUTE	POST MILES TOTAL PROJECT	SHEET No.	TOTAL SHEETS
07	LA	138	44.9	32	57

Theresa Gabriel
REGISTERED ELECTRICAL ENGINEER

October 30, 2015
PLANS APPROVAL DATE

REGISTERED PROFESSIONAL ENGINEER
Theresa Aziz Gabriel
No. E15129
Exp. 6-30-16
ELECTRICAL
STATE OF CALIFORNIA

THE STATE OF CALIFORNIA OR ITS OFFICERS OR AGENTS SHALL NOT BE RESPONSIBLE FOR THE ACCURACY OR COMPLETENESS OF SCANNED COPIES OF THIS PLAN SHEET.

TO ACCOMPANY PLANS DATED 3-28-16

2010 REVISED STANDARD PLAN RSP ES-2C

NOTES:

1. The plan shows the approximate location of devices within the enclosure. Components may be rearranged, however, the "working" clearances within the service equipment enclosure shall be maintained.

2. In unpaved areas a raised portland cement concrete pad 2'-0" x 4" x width of foundation shall be constructed in front of new service equipment enclosure installation. Pad shall be set to elevation of foundation.

3. Plug-in circuit breakers may be mounted in the vertical or horizontal position. Cable-in/cable-out circuit breakers shall be mounted in the vertical position.

4. Type III-AF and Type III-BF service equipment enclosures shall have the meter viewing windows located on the front side of the service equipment enclosures.

5. Type III-AR and Type III-BR service equipment enclosure shall be similarly constructed as Type III-AF and Type III-BF respectively, except the meter viewing windows shall be located on the back side of the service equipment enclosures.

STATE OF CALIFORNIA
DEPARTMENT OF TRANSPORTATION

ELECTRICAL SYSTEMS (SERVICE EQUIPMENT ENCLOSURE NOTES TYPE III SERIES)

NO SCALE

RSP ES-2C DATED OCTOBER 30, 2015 SUPERSEDES STANDARD PLAN ES-2C DATED MAY 20, 2011 - PAGE 430 OF THE STANDARD PLANS BOOK DATED 2010.

REVISED STANDARD PLAN RSP ES-2C

Dist	COUNTY	ROUTE	POST MILES TOTAL PROJECT	SHEET No.	TOTAL SHEETS
07	LA	138	44.9	33	57

Theresa Gabriel
REGISTERED ELECTRICAL ENGINEER

October 30, 2015
PLANS APPROVAL DATE

REGISTERED PROFESSIONAL ENGINEER Theresa Aziz Gabriel No. E15129 Exp. 6-30-16 ELECTRICAL STATE OF CALIFORNIA

THE STATE OF CALIFORNIA OR ITS OFFICERS OR AGENTS SHALL NOT BE RESPONSIBLE FOR THE ACCURACY OR COMPLETENESS OF SCANNED COPIES OF THIS PLAN SHEET.

TO ACCOMPANY PLANS DATED 3-28-16

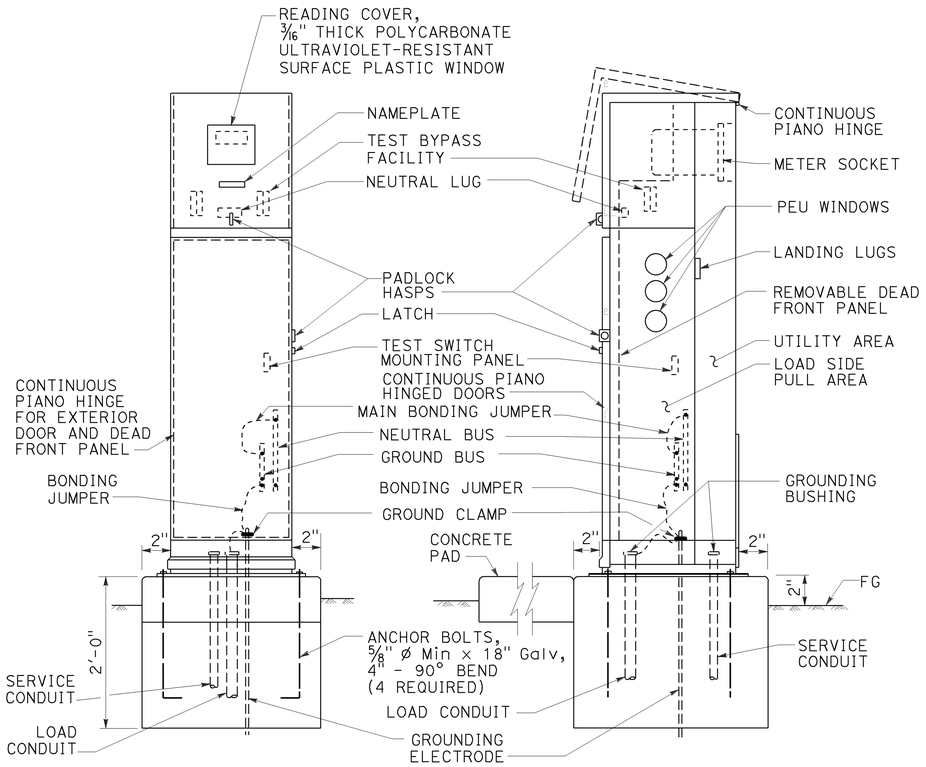

TYPE III-BF SERVICE EQUIPMENT ENCLOSURE (TYPICAL)

DETAIL A

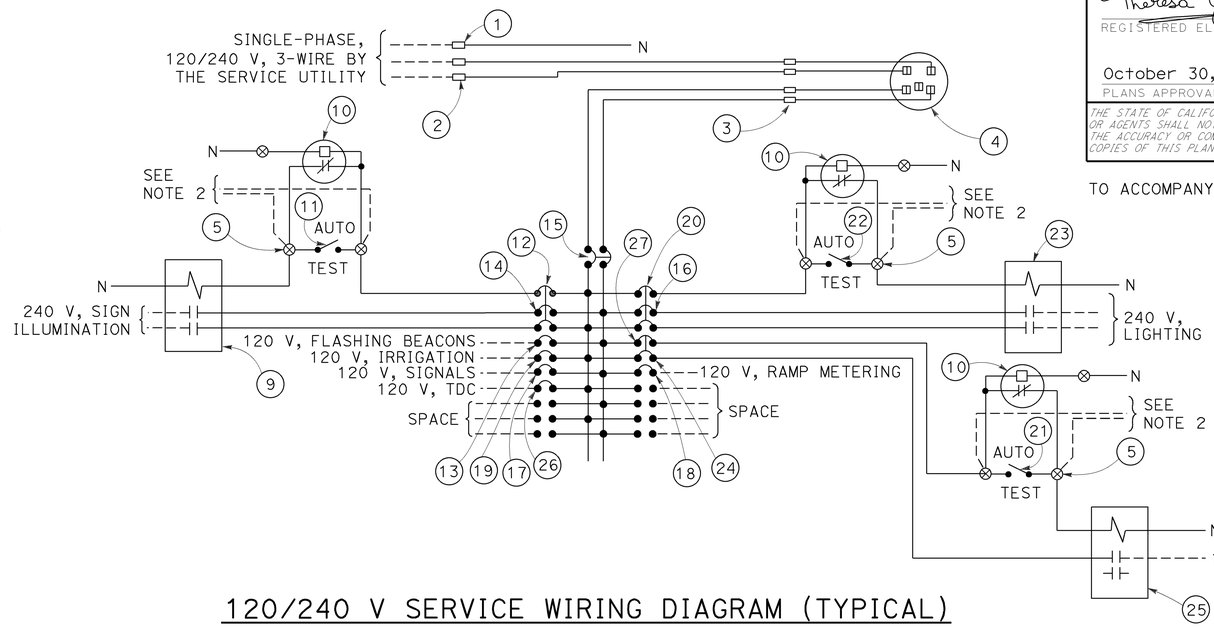

120/240 V SERVICE WIRING DIAGRAM (TYPICAL)

DETAIL C

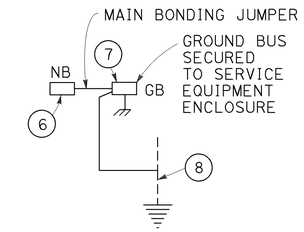

DETAIL D

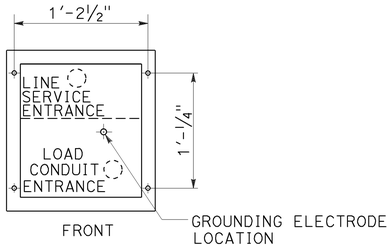

BASE FOR TYPE III-B SERVICE EQUIPMENT ENCLOSURE

DETAIL B

TYPE III-B SERVICE EQUIPMENT ENCLOSURE LEGEND (120/240 V)

ITEM	COMPONENT	NAMEPLATE DESCRIPTION	ITEM	COMPONENT	NAMEPLATE DESCRIPTION
1	NEUTRAL LUG		14	30 A, 240 V, 2P, CB	SIGN ILLUMINATION
2	LANDING LUG		15	100 A, 240 V, 2P, CB	MAIN BREAKER
3	TEST BYPASS FACILITY		16	30 A, 240 V, 2P, CB	LIGHTING
4	METER SOCKET AND SUPPORT		17	50 A, 120 V, 1P, CB	SIGNALS
5	TERMINAL BLOCKS		18	30 A, 120 V, 1P, CB	RAMP METERING
6	NEUTRAL BUS		19	20 A, 120 V, 1P, CB	IRRIGATION
7	GROUND BUS		20	15 A, 120 V, 1P, CB	LIGHTING CONTROL
8	GROUNDING ELECTRODE		21	15 A, 1P, TEST SWITCH	IISNS TEST SWITCH
9	30 A, 2P, NO CONTACTOR	SIGN ILLUMINATION	22	15 A, 1P, TEST SWITCH	LIGHTING TEST SWITCH
10	PHOTOELECTRIC UNIT (NOTE 4)	PEU	23	60 A, 2P, NO CONTACTOR	LIGHTING
11	15 A, 1P, TEST SWITCH	SIGN ILLUMINATION TEST SWITCH	24	15 A, 120 V, 1P, CB	IISNS
12	15 A, 120 V, 1P, CB	SIGN ILLUMINATION CONTROL	25	30 A, 2P, NO CONTACTOR	IISNS
13	15 A, 120 V, 1P, CB	FLASHING BEACON	26	20 A, 120 V, IP, CB	TELEPHONE DEMARCATION CABINET
			27	15 A, 120 V, 1P, CB	IISNS CONTROL

NOTES:

1. Unless otherwise indicated on the plans, service equipment items shall be provided for each service equipment enclosure as shown.
2. Connect to remote test switch mounted on lighting standards, sign post or structure when required.
3. Items 1 and 6 shall be isolated from the service equipment enclosure.
4. Type V photoelectric control shall be used unless otherwise indicated on the plans.
5. Item 12, 20 and 27 shall be ganged operated CB.

STATE OF CALIFORNIA
DEPARTMENT OF TRANSPORTATION

ELECTRICAL SYSTEMS (SERVICE EQUIPMENT ENCLOSURE AND TYPICAL WIRING DIAGRAM, TYPE III-B SERIES)

NO SCALE

RSP ES-2E DATED OCTOBER 30, 2015 SUPERSEDES STANDARD PLAN ES-2E DATED MAY 20, 2011 - PAGE 432 OF THE STANDARD PLANS BOOK DATED 2010.

REVISED STANDARD PLAN RSP ES-2E

2010 REVISED STANDARD PLAN RSP ES-2E

8-20-15

Dist	COUNTY	ROUTE	POST MILES TOTAL PROJECT	SHEET No.	TOTAL SHEETS
07	LA	138	44.9	34	57

Theresa Gabriel
REGISTERED ELECTRICAL ENGINEER

October 30, 2015
PLANS APPROVAL DATE

REGISTERED PROFESSIONAL ENGINEER
Theresa Aziz Gabriel
No. E15129
Exp. 6-30-16
ELECTRICAL
STATE OF CALIFORNIA

THE STATE OF CALIFORNIA OR ITS OFFICERS OR AGENTS SHALL NOT BE RESPONSIBLE FOR THE ACCURACY OR COMPLETENESS OF SCANNED COPIES OF THIS PLAN SHEET.

TO ACCOMPANY PLANS DATED 3-28-16

NOTES:

1. Cabinet dimensions are nominal.
2. Cabinet fan may be installed at an alternate location near the top of the cabinet when approved by the Engineer.

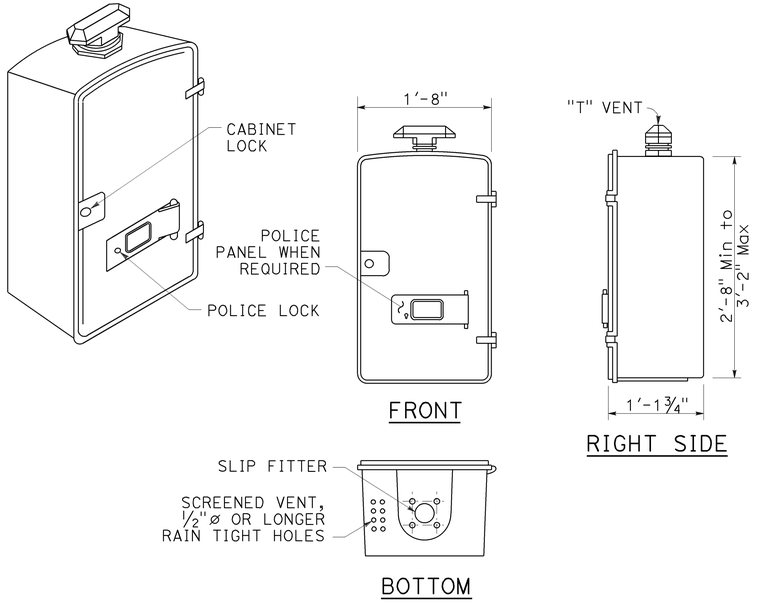

TYPE G CABINET

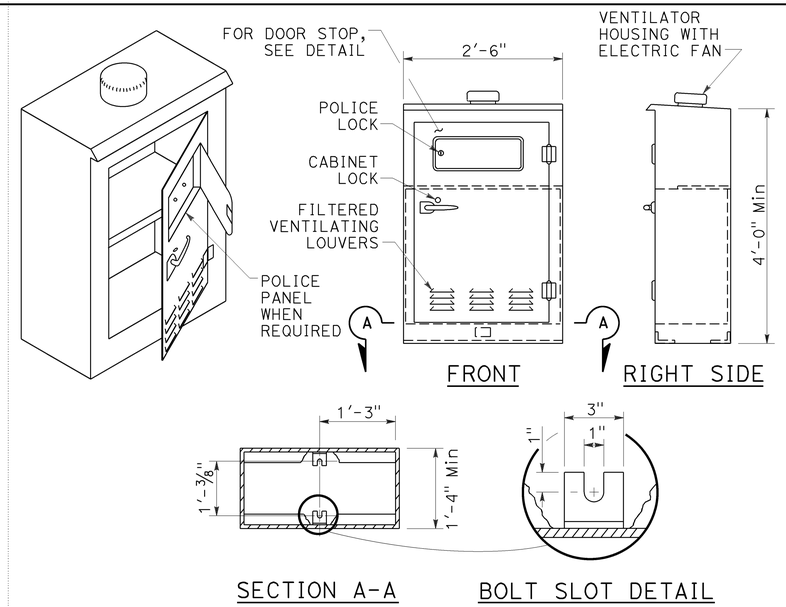

TYPE M CABINET

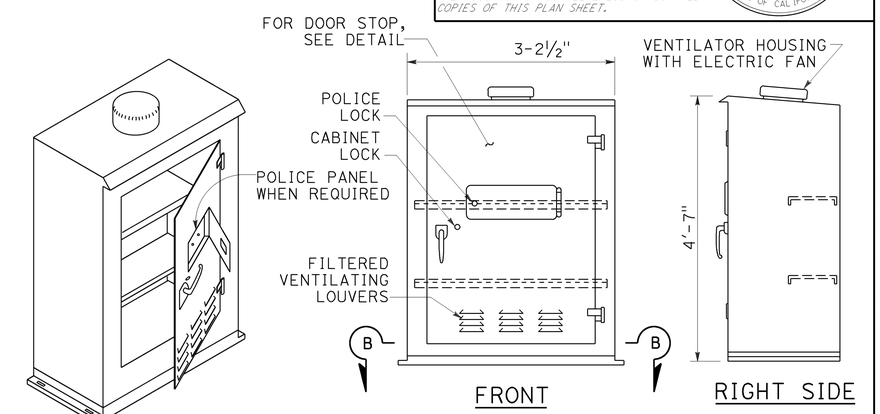

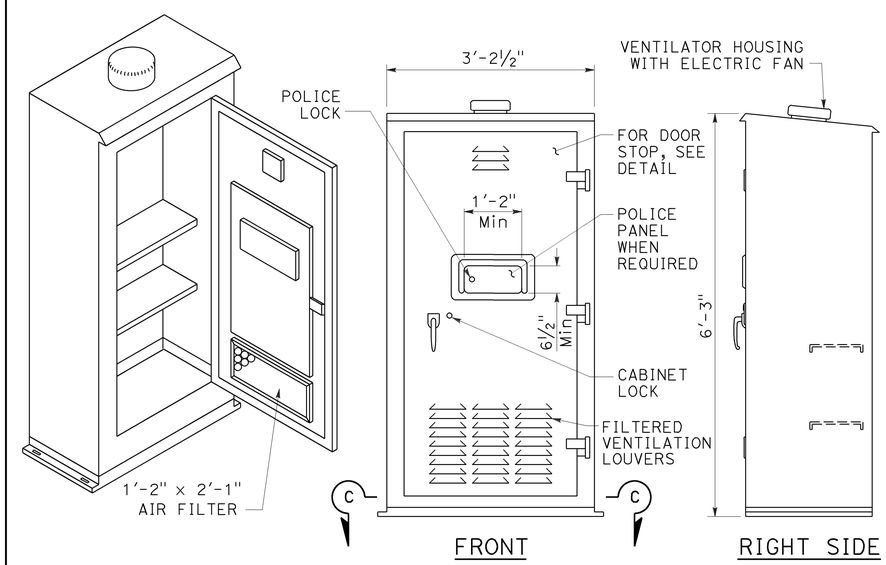

TYPE R CABINET

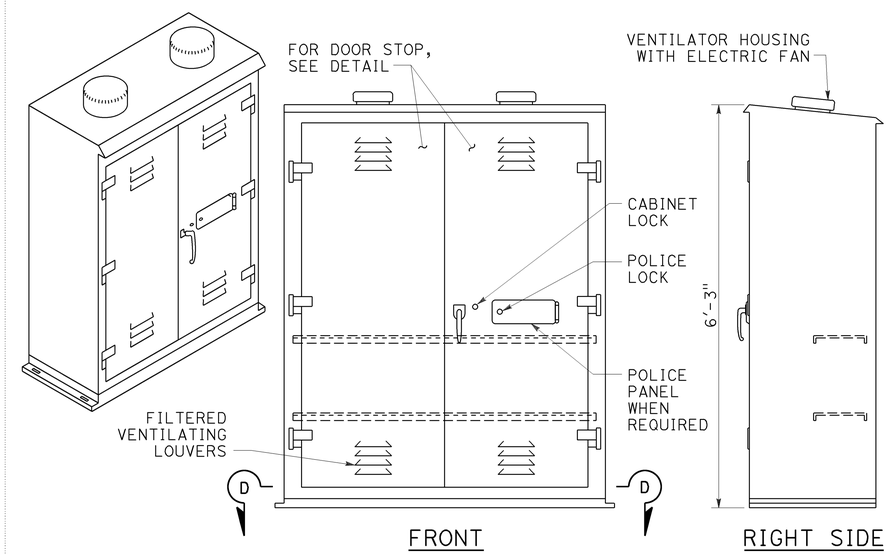

TYPE S CABINET

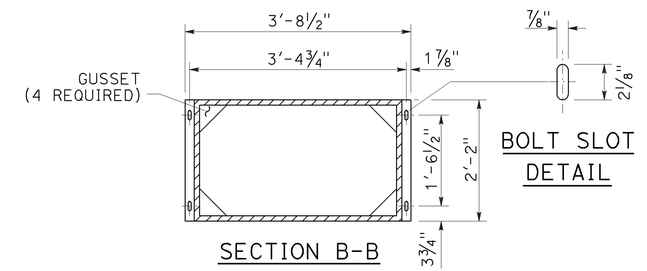

TYPE P CABINET

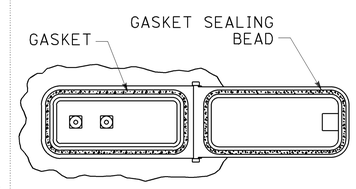

POLICE PANEL

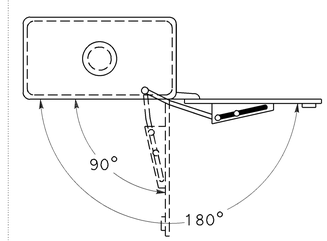

PLAN VIEW
DOOR STOP DETAIL
(2 POSITIONS)

STATE OF CALIFORNIA
DEPARTMENT OF TRANSPORTATION

ELECTRICAL SYSTEMS (CONTROLLER CABINET DETAILS)

NO SCALE

RSP ES-3A DATED OCTOBER 30, 2015 SUPERSEDES STANDARD PLAN ES-3A DATED MAY 20, 2011 - PAGE 435 OF THE STANDARD PLANS BOOK DATED 2010.

REVISED STANDARD PLAN RSP ES-3A

2010 REVISED STANDARD PLAN RSP ES-3A

8-19-15

Dist	COUNTY	ROUTE	POST MILES TOTAL PROJECT	SHEET No.	TOTAL SHEETS
07	LA	138	44.9	35	57

Theresa Gabriel
REGISTERED ELECTRICAL ENGINEER

October 30, 2015
PLANS APPROVAL DATE

REGISTERED PROFESSIONAL ENGINEER Theresa Aziz Gabriel No. E15129 Exp. 6-30-16 ELECTRICAL STATE OF CALIFORNIA

THE STATE OF CALIFORNIA OR ITS OFFICERS OR AGENTS SHALL NOT BE RESPONSIBLE FOR THE ACCURACY OR COMPLETENESS OF SCANNED COPIES OF THIS PLAN SHEET.

TO ACCOMPANY PLANS DATED 3-28-16

2010 REVISED STANDARD PLAN RSP ES-3B

NOTES:

1. Foundation shall be located to provide 2'-0" minimum clearance between face of curb and any portion of cabinet.
2. Type G, M, P, R, S and Model 336L cabinets shall be installed with the back toward the nearest lane of traffic.
3. In unpaved areas, a raised portland cement concrete pad shall be constructed in front of each controller cabinet. The pad shall be 3'-0" x 3'-0" x 4" for a Type G cabinet and shall be 3'-0" x 4" thick x width of foundation for Type M, P, R, S and Model 336L cabinets.
4. In unpaved areas, the top of foundation for Type G, P, R and S cabinets shall be 6" above surrounding grade. Top of foundation for Type M or Model 336L cabinet shall be 1'-6" above surrounding grade.
5. In sidewalks and other paved areas, top of foundation for Type G cabinet shall be level with surrounding grade. Top of foundation for Type P, R and S cabinets shall be 3½" above surrounding grade.
6. The steel pedestal, base plate, bolt circle and foundation for Type G cabinet shall be the same as that shown for a Type 1-C Standard (see ES-7B). Pedestal shall be 2'-1" to 2'-6" in length. Anchor bolts shall be ¾" Ø x 1'-6" with a 2" - 90° bend. Four bolts required per cabinet.
7. Type G cabinet shall be provided with a slipfitter to permit mounting an 4½" outside diameter pedestal. Slipfitter shall be bolted to bottom of the cabinet.
8. A 1" drain shall be provided through the foundation of a Type M or Model 336L cabinet. Drain pipe shall be screened.
9. Cabinet shelves shall be adjustable for vertical spacing and shall be removable. Type M, P, R and S cabinets shall be provided with a minimum of two shelves.
10. Controller units, plug-mounted equipment, shelf-mounted equipment and wall-mounted equipment shall be located to permit safe and easy removal or replacement without removing any other piece of equipment.
11. Where telephone interconnect is required, a minimum of 5" clear vertical space shall be provided inside the cabinet for the equipment.
12. Telephone interconnect conductors shall be enclosed in a ¾"C or larger conduit through the foundation. Type 4 conduit shall be used to separate telephone and power conductors in cabinets or pedestals.
13. Anchor bolts for Type M, P, R, S and Model 336L cabinets shall be ¾" Ø x 1'-6" with a 2" - 90° bend.

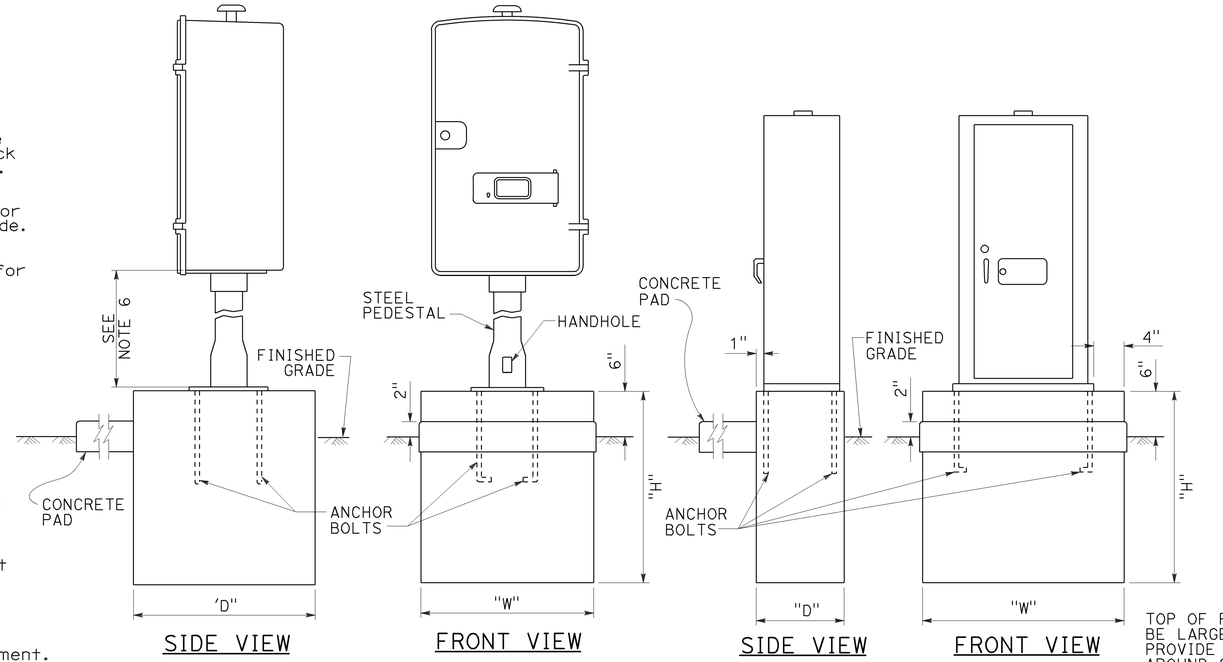

FOUNDATION FOR TYPE G CABINET
DETAIL A

FOUNDATION FOR TYPE P, R AND S CABINETS
DETAIL B

CABINET TYPE	FOUNDATION		
	"W"	"H"	"D"
G	2'-0"	3'-6"	2'-0"
M	3'-2"	2'-6"	1'-6"
P	4'-4½"	1'-6"	2'-4"
R	4'-2"	1'-6"	2'-4"
S	5'-11½"	1'-6"	2'-4"

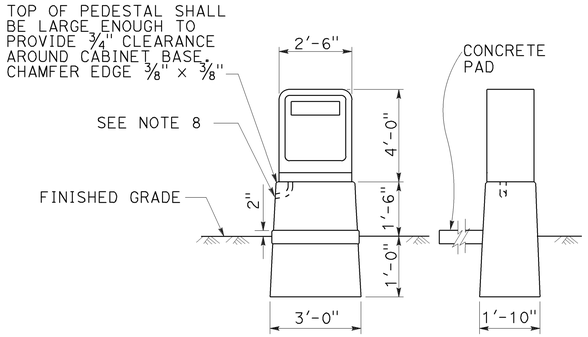

PEDESTAL FOUNDATION FOR TYPE M OR MODEL 336L CABINET
DETAIL C

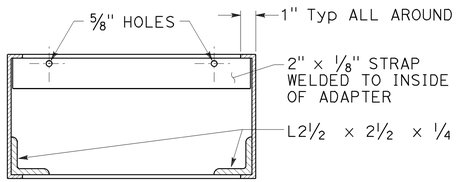

SECTION A-A

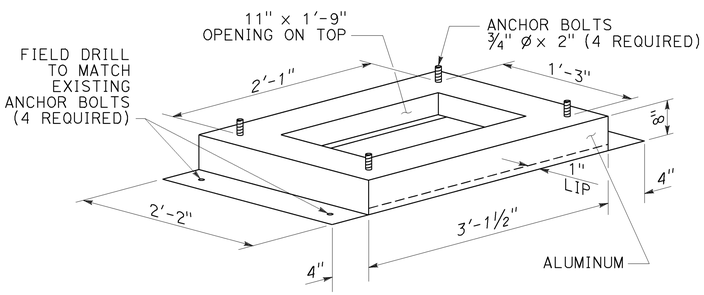

TYPE PR CABINET ADAPTER
See Notes A and B

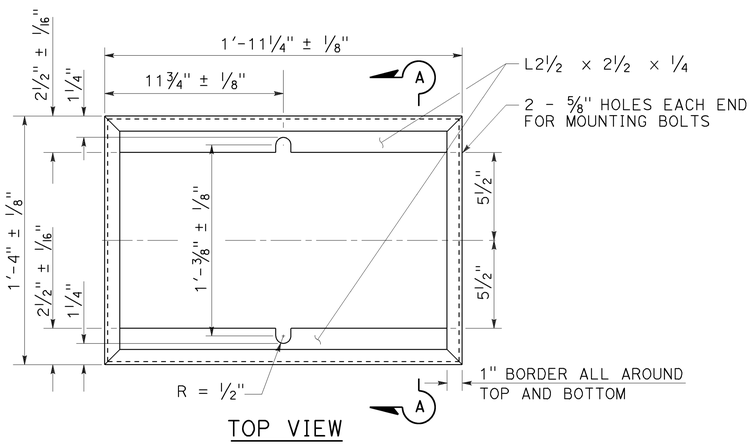

TOP VIEW

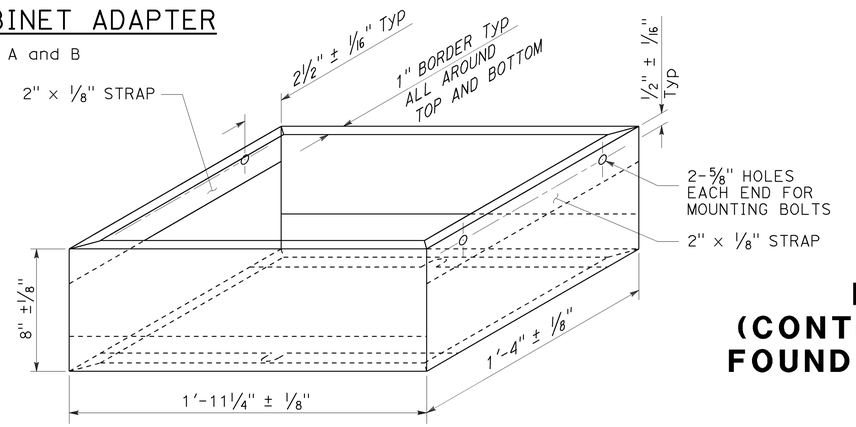

TYPE M CABINET ADAPTER
See Notes A, C, and D

NOTES:

A. Material: 0.188" thickness aluminum plate.
B. Adapter for Type P or Type R cabinet foundation.
C. Adapter for Type M cabinet foundation.
D. Mounting bolts shall be ⅜" Ø minimum size.

STATE OF CALIFORNIA
DEPARTMENT OF TRANSPORTATION

ELECTRICAL SYSTEMS (CONTROLLER CABINET ADAPTER, FOUNDATIONS, AND PAD DETAILS)

NO SCALE

RSP ES-3B DATED OCTOBER 30, 2015 SUPERSEDES STANDARD PLAN ES-3B DATED MAY 20, 2011 - PAGE 436 OF THE STANDARD PLANS BOOK DATED 2010.

REVISED STANDARD PLAN RSP ES-3B

8-19-15

Dist	COUNTY	ROUTE	POST MILES TOTAL PROJECT	SHEET No.	TOTAL SHEETS
07	LA	138	44.9	36	57

Theresa Gabriel
REGISTERED ELECTRICAL ENGINEER

October 30, 2015
PLANS APPROVAL DATE

REGISTERED PROFESSIONAL ENGINEER Theresa Aziz Gabriel No. E15129 Exp. 6-30-16 ELECTRICAL STATE OF CALIFORNIA

THE STATE OF CALIFORNIA OR ITS OFFICERS OR AGENTS SHALL NOT BE RESPONSIBLE FOR THE ACCURACY OR COMPLETENESS OF SCANNED COPIES OF THIS PLAN SHEET.

TO ACCOMPANY PLANS DATED 3-28-16

2010 REVISED STANDARD PLAN RSP ES-3C

NOTES:

1. Foundation shall be located to provide 2'-0" minimum clearance between face of curb and any portion of cabinet.
2. Controller units, plug-mounted equipment, shelf-mounted equipment and wall-mounted equipment shall be located to permit safe and easy removal or replacement without removing any other piece of equipment.
3. Cabinet fan may be installed at an alternate location near the top of the cabinet when approved by the Engineer.
4. Where telephone interconnect is required, a minimum of 5" clear vertical space shall be provided inside the cabinet for the equipment.
5. Telephone interconnect conductors shall be enclosed in a ¾"C or larger conduit through the foundation. Type 4 conduit shall be used to separate telephone and power conductors in cabinets.

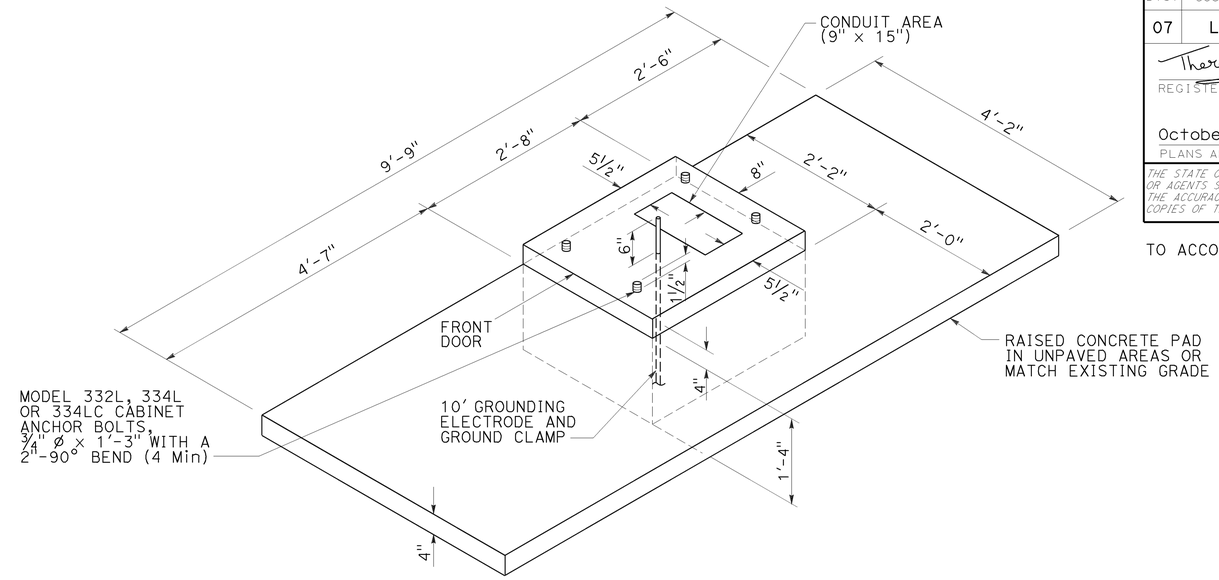

FOUNDATION AND PAD DETAIL

Model 332L, 334L and 334LC

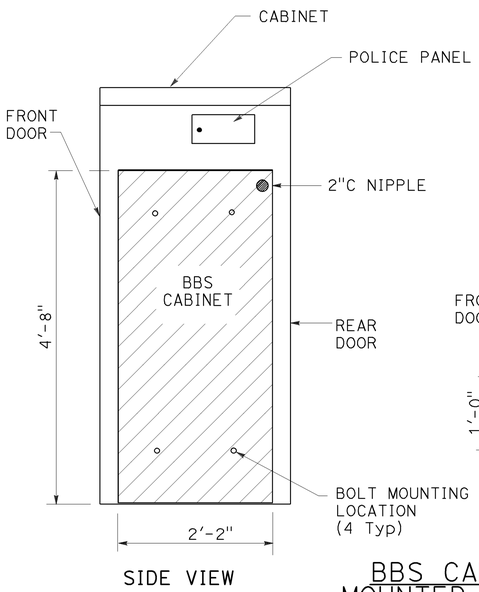

SIDE VIEW

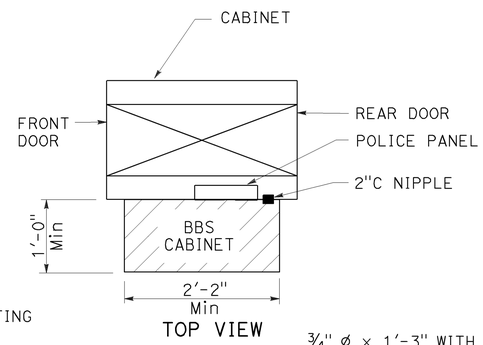

TOP VIEW

BBS CABINET MOUNTED TO THE MODEL 332L CABINET

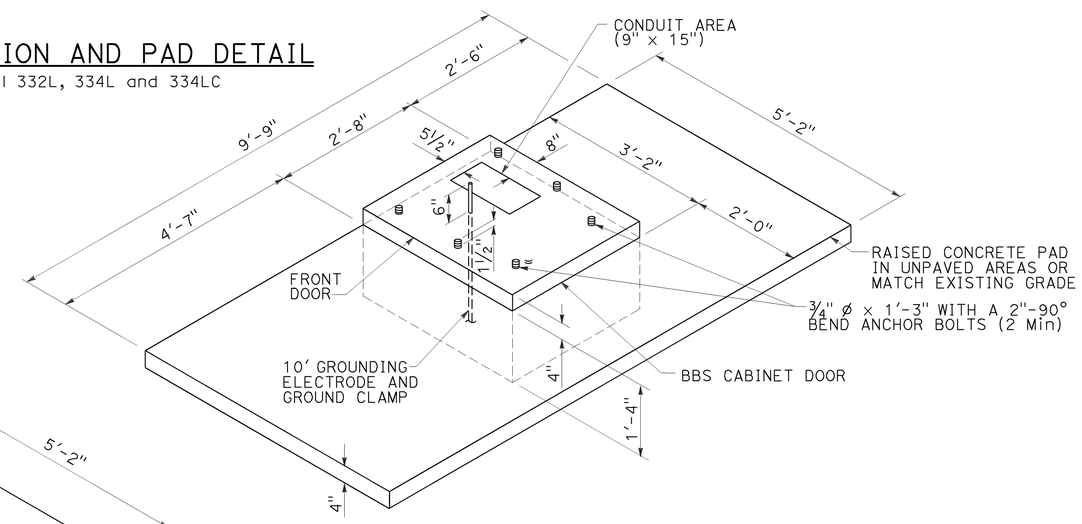

RIGHT SIDE INSTALLATION

DETAIL B

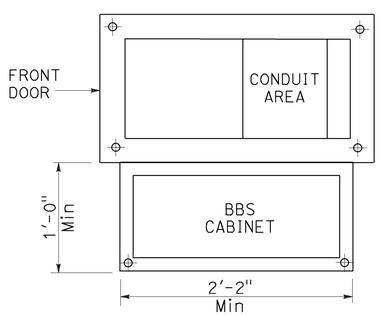

BASE PLAN FOR BBS MOUNTED TO THE MODEL 332L CABINET

(FOR DIMENSIONS AND DETAILS NOT SHOWN, SEE CABINET HOUSING DETAILS OF THE TRANSPORTATION ELECTRICAL EQUIPMENT SPECIFICATION (TEES))

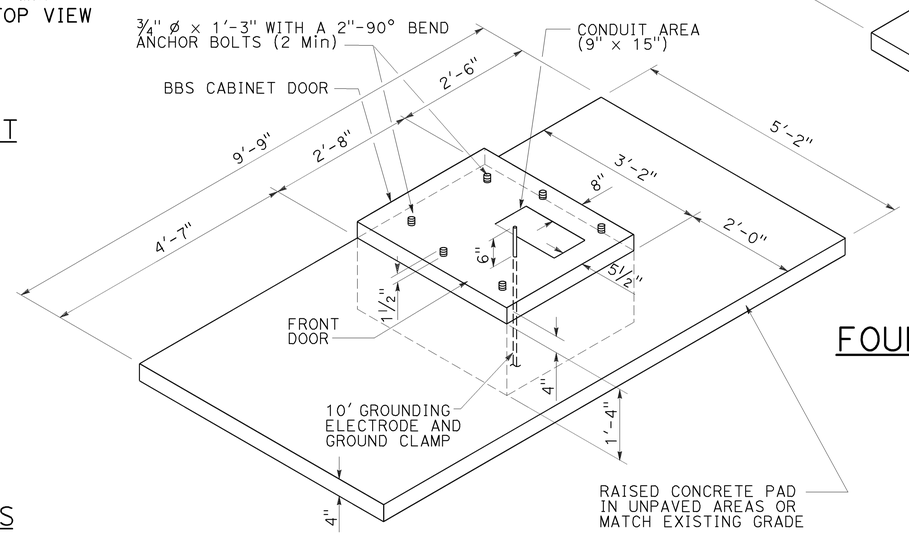

LEFT SIDE INSTALLATION

DETAIL A

MODIFIED MODEL 332L CABINET FOUNDATION DETAIL FOR BATTERY BACKUP SYSTEM

STATE OF CALIFORNIA
DEPARTMENT OF TRANSPORTATION

ELECTRICAL SYSTEMS (CONTROLLER CABINET FOUNDATION AND PAD DETAILS)

NO SCALE

RSP ES-3C DATED OCTOBER 30, 2015 SUPERSEDES STANDARD PLAN ES-3C DATED MAY 20, 2011 - PAGE 437 OF THE STANDARD PLANS BOOK DATED 2010.

REVISED STANDARD PLAN RSP ES-3C

9-2-15

Dist	COUNTY	ROUTE	POST MILES TOTAL PROJECT	SHEET No.	TOTAL SHEETS
07	LA	138	44.9	37	57

Theresa Gabriel
REGISTERED ELECTRICAL ENGINEER

October 30, 2015
PLANS APPROVAL DATE

REGISTERED PROFESSIONAL ENGINEER
Theresa Aziz Gabriel
No. E15129
Exp. 6-30-16
ELECTRICAL
STATE OF CALIFORNIA

THE STATE OF CALIFORNIA OR ITS OFFICERS OR AGENTS SHALL NOT BE RESPONSIBLE FOR THE ACCURACY OR COMPLETENESS OF SCANNED COPIES OF THIS PLAN SHEET.

TO ACCOMPANY PLANS DATED 3-28-16

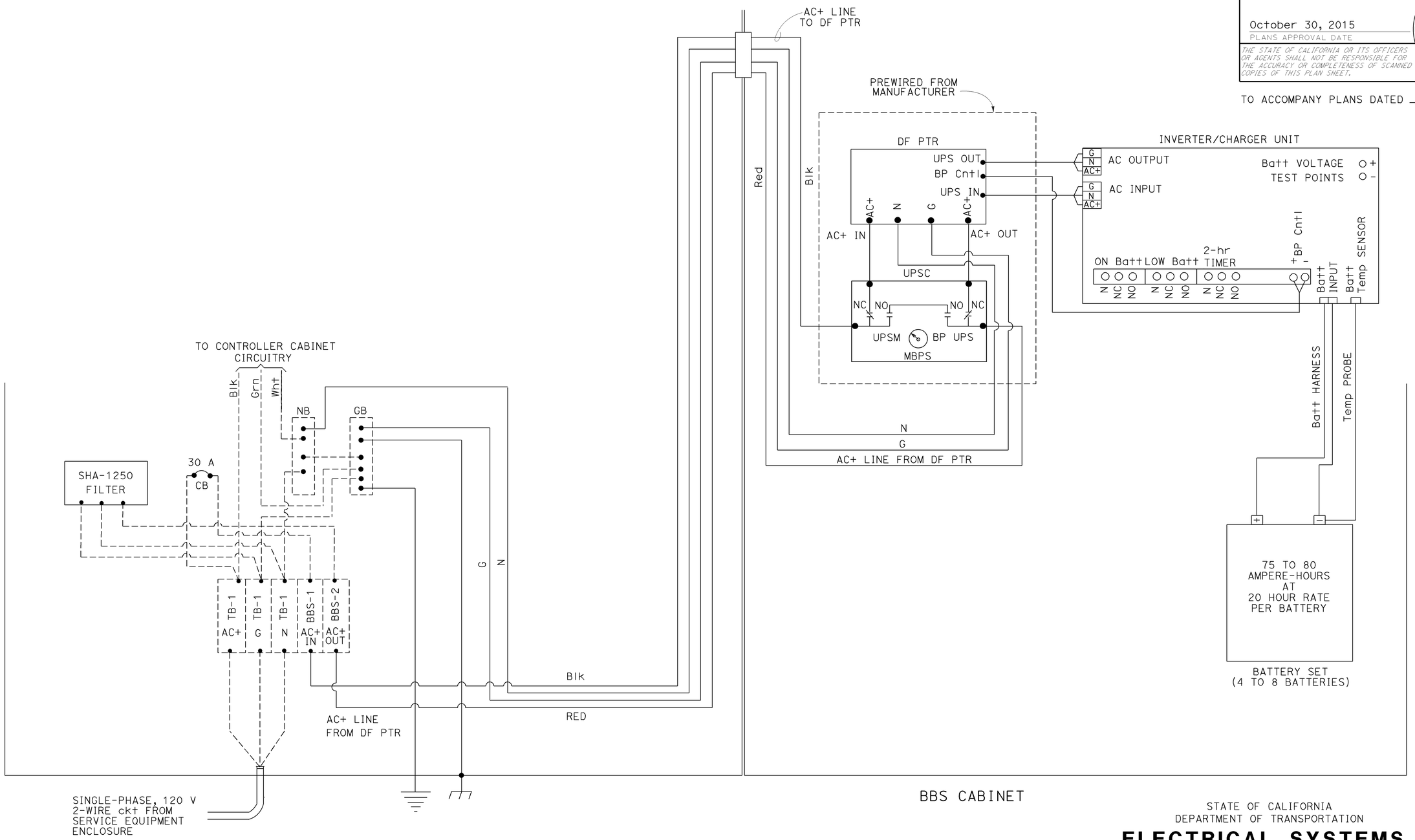

STATE OF CALIFORNIA
DEPARTMENT OF TRANSPORTATION

ELECTRICAL SYSTEMS (BBS POWER CONNECTION DIAGRAM, WITH BYPASS CONTROL LINE)

NO SCALE

RSP ES-3I DATED OCTOBER 30, 2015 THAT SUPPLEMENTS THE STANDARD PLANS BOOK DATED 2010.

REVISED STANDARD PLAN RSP ES-3I

2010 REVISED STANDARD PLAN RSP ES-3I

8-18-15

Dist	COUNTY	ROUTE	POST MILES TOTAL PROJECT	SHEET No.	TOTAL SHEETS
07	LA	138	44.9	38	57

Theresa Gabriel
REGISTERED ELECTRICAL ENGINEER

October 30, 2015
PLANS APPROVAL DATE

REGISTERED PROFESSIONAL ENGINEER
Theresa Aziz Gabriel
No. E15129
Exp. 6-30-16
ELECTRICAL
STATE OF CALIFORNIA

THE STATE OF CALIFORNIA OR ITS OFFICERS OR AGENTS SHALL NOT BE RESPONSIBLE FOR THE ACCURACY OR COMPLETENESS OF SCANNED COPIES OF THIS PLAN SHEET.

TO ACCOMPANY PLANS DATED 3-28-16

2010 REVISED STANDARD PLAN RSP ES-4A

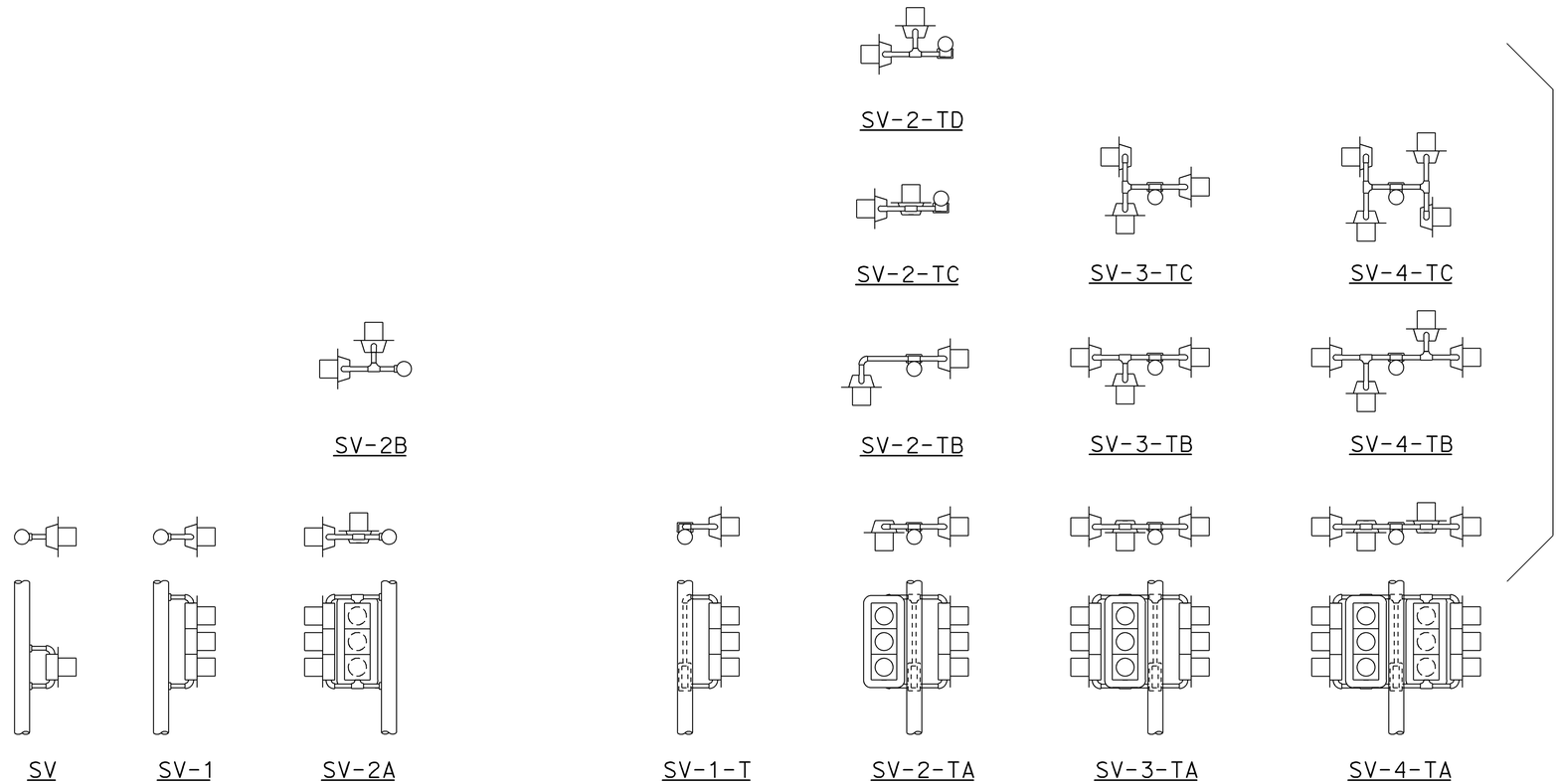

SIDE MOUNTINGS

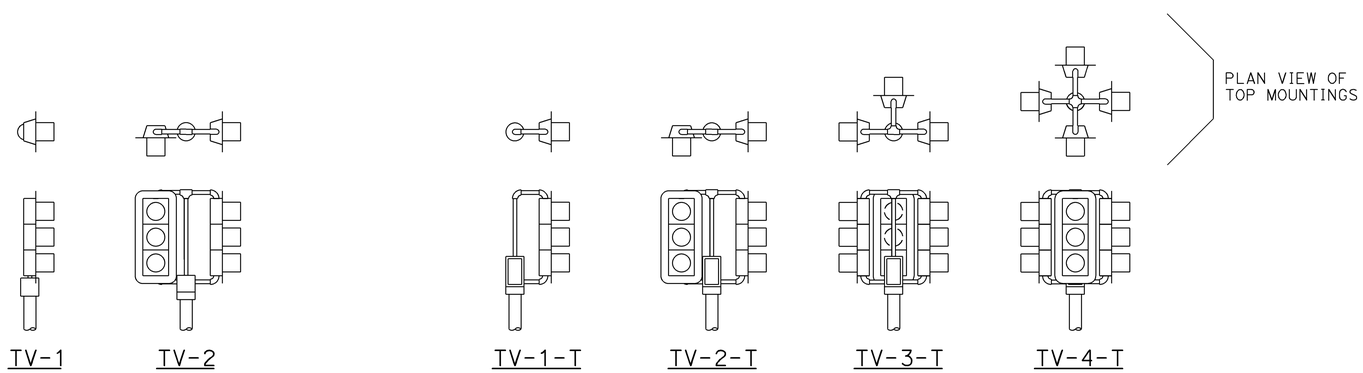

TOP MOUNTINGS

ABBREVIATIONS:

SV	SIDE MOUNTED SIGNAL HEADS
T	TERMINAL COMPARTMENT
TV	TOP MOUNTED SIGNAL HEADS
1, 2, 3, 4	NUMBER OF SIGNAL FACES (3 - SECTION, UNLESS OTHERWISE INDICATED)
A, B, C, D	CONFIGURATION OF SIGNALS

NOTES:

1. Mountings shall be oriented to provide maximum horizontal clearance to adjacent roadway.
2. Bracket arms shall be long enough to permit proper alignment of signals and backplate installation.
3. See Revised Standard Plans RSP ES-4D and RSP ES-4E for attachment fitting details.

STATE OF CALIFORNIA
DEPARTMENT OF TRANSPORTATION

ELECTRICAL SYSTEMS (SIGNAL HEADS AND MOUNTINGS)

NO SCALE

RSP ES-4A DATED OCTOBER 30, 2015 SUPERSEDES RSP ES-4A DATED JULY 19, 2013 AND STANDARD PLAN ES-4A DATED MAY 20, 2011 - PAGE 443 OF THE STANDARD PLANS BOOK DATED 2010.

REVISED STANDARD PLAN RSP ES-4A

Dist	COUNTY	ROUTE	POST MILES TOTAL PROJECT	SHEET No.	TOTAL SHEETS
07	LA	138	44.9	39	57

Theresa Gabriel
REGISTERED ELECTRICAL ENGINEER

October 30, 2015
PLANS APPROVAL DATE

REGISTERED PROFESSIONAL ENGINEER
Theresa Aziz Gabriel
No. E15129
Exp. 6-30-16
ELECTRICAL
STATE OF CALIFORNIA

THE STATE OF CALIFORNIA OR ITS OFFICERS OR AGENTS SHALL NOT BE RESPONSIBLE FOR THE ACCURACY OR COMPLETENESS OF SCANNED COPIES OF THIS PLAN SHEET.

TO ACCOMPANY PLANS DATED 3-28-16

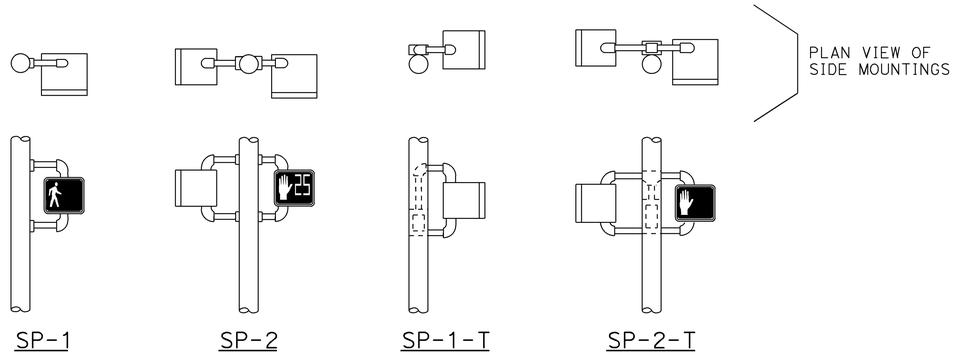

SIDE MOUNTINGS

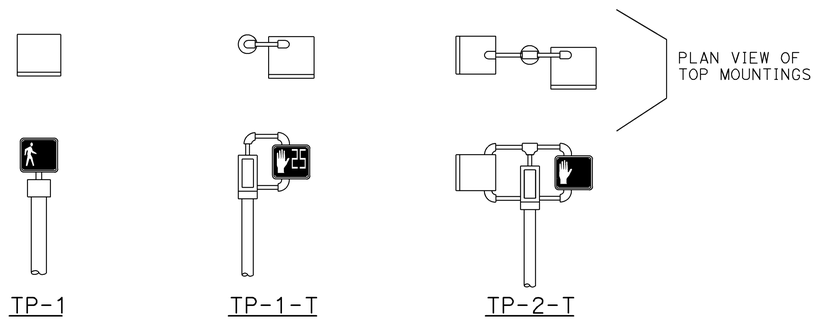

TOP MOUNTINGS

PEDESTRIAN SIGNAL HEAD MOUNTINGS

DETAIL A

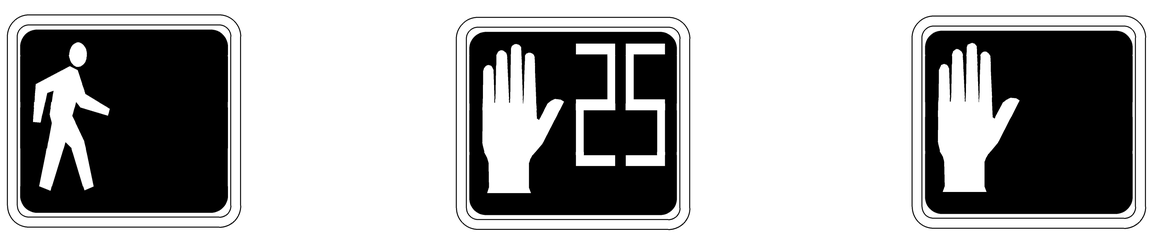

PERSON WALKING INTERVAL FLASHING UPRAISED HAND INTERVAL STEADY UPRAISED HAND INTERVAL

LED COUNTDOWN PEDESTRIAN SIGNAL FACE MODULE

DETAIL B

NOTES:

1. Mounting shall be oriented to provide maximum horizontal clearance to adjacent roadway.
2. Bracket arms shall be long enough to permit proper alignment of signals.
3. See Revised Standard Plan RSP ES-4D for attachment fittings details.

ABBREVIATIONS:

1, 2	NUMBER OF SIGNAL FACES
SP	SIDE MOUNTED PEDESTRIAN SIGNAL
T	TERMINAL COMPARTMENT
TP	TOP MOUNTED PEDESTRIAN SIGNAL

STATE OF CALIFORNIA
DEPARTMENT OF TRANSPORTATION

ELECTRICAL SYSTEMS (PEDESTRIAN SIGNAL HEADS)

NO SCALE

RSP ES-4B DATED OCTOBER 30, 2015 SUPERSEDES RSP ES-4B DATED JULY 19, 2013 AND STANDARD PLAN ES-4B DATED MAY 20, 2011 - PAGE 444 OF THE STANDARD PLANS BOOK DATED 2010.

REVISED STANDARD PLAN RSP ES-4B

2010 REVISED STANDARD PLAN RSP ES-4B

9-1-15

Dist	COUNTY	ROUTE	POST MILES TOTAL PROJECT	SHEET No.	TOTAL SHEETS
07	LA	138	44.9	40	57

Theresa Gabriel
REGISTERED ELECTRICAL ENGINEER

October 30, 2015
PLANS APPROVAL DATE

REGISTERED PROFESSIONAL ENGINEER
Theresa Aziz Gabriel
No. E15129
Exp. 6-30-16
ELECTRICAL
STATE OF CALIFORNIA

THE STATE OF CALIFORNIA OR ITS OFFICERS OR AGENTS SHALL NOT BE RESPONSIBLE FOR THE ACCURACY OR COMPLETENESS OF SCANNED COPIES OF THIS PLAN SHEET.

TO ACCOMPANY PLANS DATED 3-28-16

2010 REVISED STANDARD PLAN RSP ES-4C

VISORS

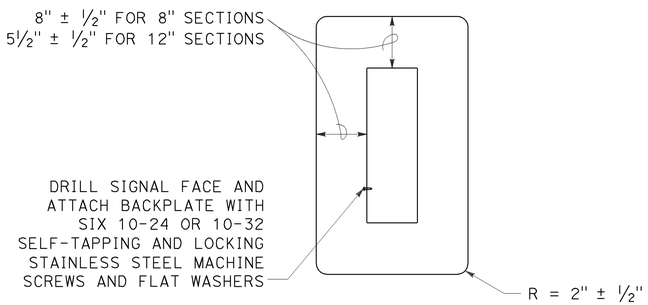

8" AND 12" SECTIONS

BACKPLATE

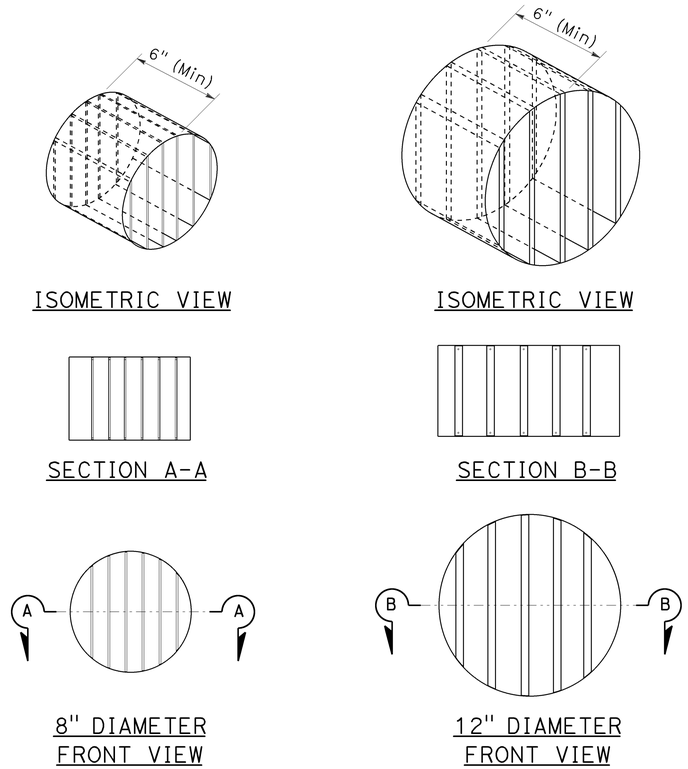

DIRECTIONAL LOUVER

Directional louvers shall be oriented and secured in place with one plated brass machine screw and nut.

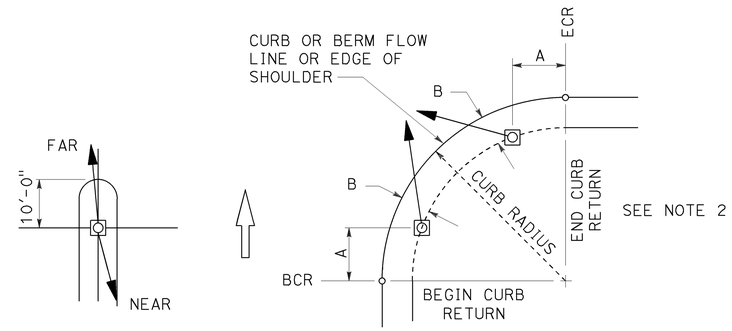

NOTES:

1. Typical signal pole placement unless dimensioned on plans.
2. For A and B dimensions, see Pole Schedule.

SIGNAL STANDARD PLACEMENT DIMENSIONS AND EQUIPMENT LOCATIONS

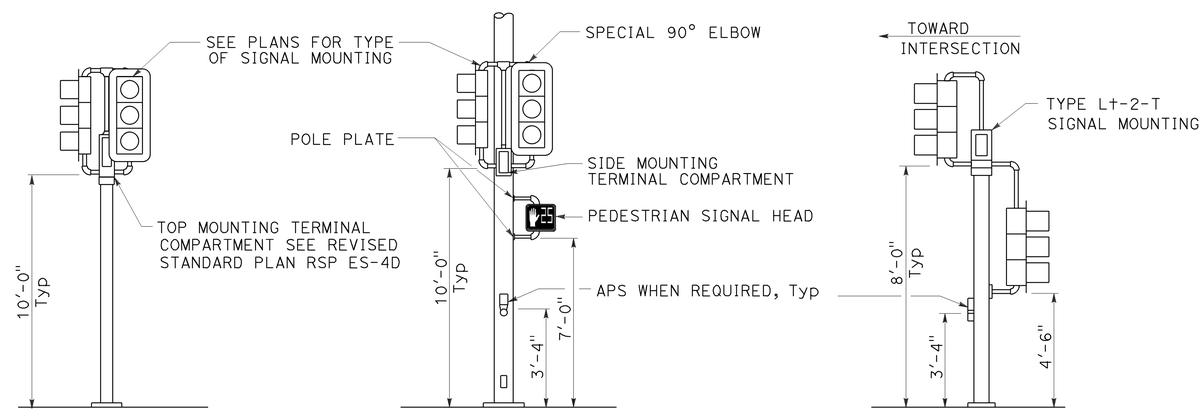

TOP MOUNTED SIGNALS (TV)
Type 1-A, 1-B, 1-C and 1-D standard as indicated on the plans

SIDE MOUNTED SIGNALS (SV AND SP)
Normally used on standards with luminaire or signal mast arm

LEFT TURN LANE SIGNAL
Type 1-A, 1-B, 1-C and 1-D standard as indicated on plans

TYPICAL SIGNAL HEAD INSTALLATIONS

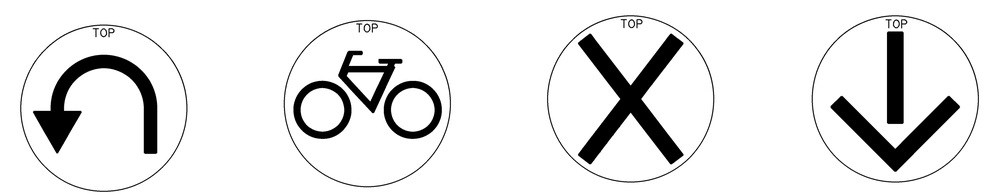

U-TURN | BICYCLE | LANE CONTROL | LANE CONTROL

SIGNAL FACES

STATE OF CALIFORNIA
DEPARTMENT OF TRANSPORTATION

ELECTRICAL SYSTEMS (SIGNAL HEADS AND MOUNTINGS)

NO SCALE

RSP ES-4C DATED OCTOBER 30, 2015 SUPERSEDES RSP ES-4C DATED JULY 19, 2013 AND STANDARD PLAN ES-4C DATED MAY 20, 2011 - PAGE 445 OF THE STANDARD PLANS BOOK DATED 2010.

REVISED STANDARD PLAN RSP ES-4C

Dist	COUNTY	ROUTE	POST MILES TOTAL PROJECT	SHEET No.	TOTAL SHEETS
07	LA	138	44.9	41	57

Theresa Gabriel
REGISTERED ELECTRICAL ENGINEER

October 30, 2015
PLANS APPROVAL DATE

REGISTERED PROFESSIONAL ENGINEER Theresa Aziz Gabriel No. E15129 Exp. 6-30-16 ELECTRICAL STATE OF CALIFORNIA

THE STATE OF CALIFORNIA OR ITS OFFICERS OR AGENTS SHALL NOT BE RESPONSIBLE FOR THE ACCURACY OR COMPLETENESS OF SCANNED COPIES OF THIS PLAN SHEET.

TO ACCOMPANY PLANS DATED 3-28-16

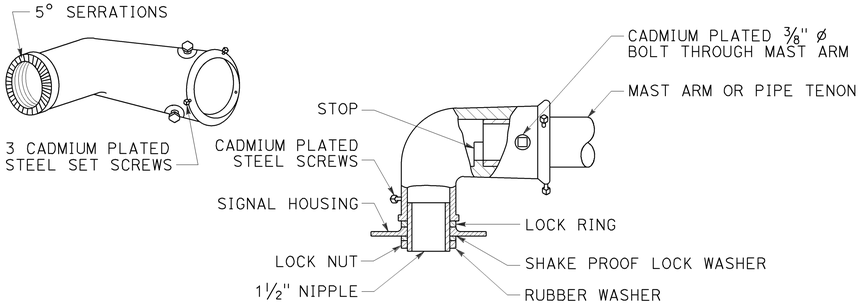

TYPE MAT
MAST ARM MOUNTING
For 2 NPS pipe, see Note 1.

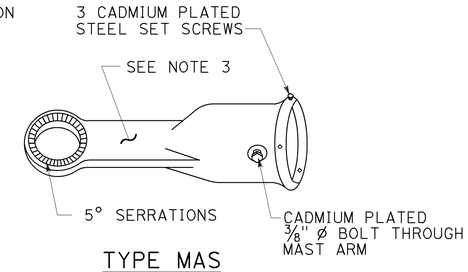

TYPE MAS
MAST ARM MOUNTING
For 2 NPS pipe, see Note 1.

SIGNAL SLIP FITTERS

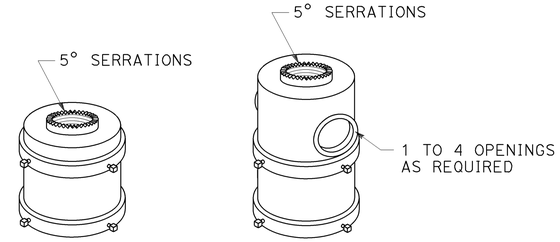

FOR ONE MOUNTING FOR MULTIPLE MOUNTINGS

TOP MOUNTINGS
For 4 NPS pipe, see Note 2.

NOTES:

1. After mast arm signal has been plumbed and secured, drill 7/16" hole through mast arm tenon in line with slip fitter hole. Place a cadmium plated 3/8" ø galvanized bolt with washer under bolt head through hole and secure with washer, nut, and locknut. Seal openings between mast arm mountings and mast arm with mastic.
2. (A) Threaded top mounted slip fitter openings shall be 1 1/2 NPS.
   (B) Serrations in fittings shall match those on bottom of signal heads or in lock ring.
   (C) Top opening shall be offset when backplate is used.
3. Wireway shall have a cross section area of 0.95 square inch minimum. Minimum width of 1/2".

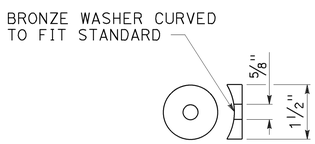

DETAIL C

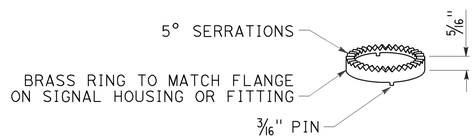

LOCK RING
Use where locking ring is not integral With signal housing or fitting.

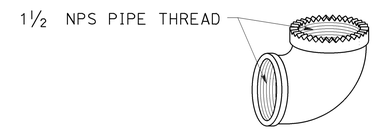

SPECIAL 90° ELBOW
One for each signal head, except those With special slip fitter mounting

MISCELLANEOUS MOUNTING HARDWARE

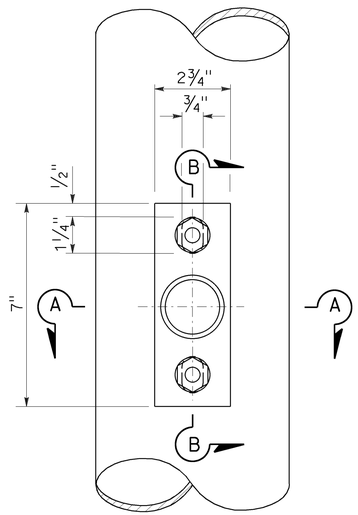

TOP VIEW

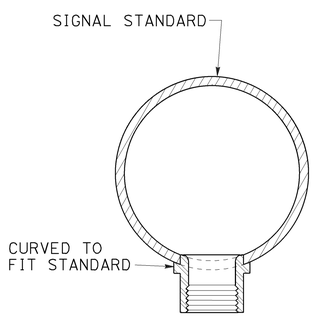

SECTION A-A

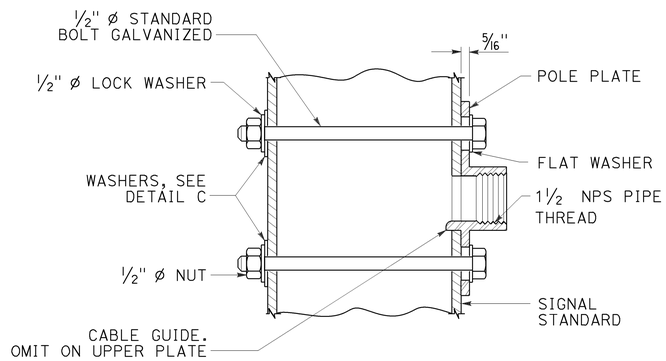

SECTION B-B

POLE PLATE FOR SIDE MOUNTED SIGNAL HEAD
WITHOUT TERMINAL COMPARTMENT

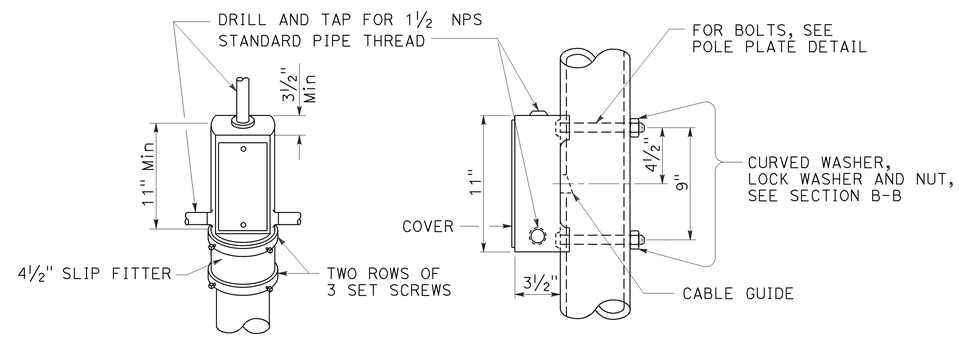

TOP MOUNTING SIDE MOUNTING

TERMINAL COMPARTMENT

STATE OF CALIFORNIA
DEPARTMENT OF TRANSPORTATION

ELECTRICAL SYSTEMS (SIGNAL HEAD MOUNTING)

NO SCALE

RSP ES-4D DATED OCTOBER 30, 2015 SUPERSEDES STANDARD PLAN ES-4D DATED MAY 20, 2011 - PAGE 446 OF THE STANDARD PLANS BOOK DATED 2010.

REVISED STANDARD PLAN RSP ES-4D

2010 REVISED STANDARD PLAN RSP ES-4D

8-20-15

Dist	COUNTY	ROUTE	POST MILES TOTAL PROJECT	SHEET No.	TOTAL SHEETS
07	LA	138	44.9	42	57

Theresa Gabriel
REGISTERED ELECTRICAL ENGINEER

October 30, 2015
PLANS APPROVAL DATE

REGISTERED PROFESSIONAL ENGINEER
Theresa Aziz Gabriel
No. E15129
Exp. 6-30-16
ELECTRICAL
STATE OF CALIFORNIA

THE STATE OF CALIFORNIA OR ITS OFFICERS OR AGENTS SHALL NOT BE RESPONSIBLE FOR THE ACCURACY OR COMPLETENESS OF SCANNED COPIES OF THIS PLAN SHEET.

TO ACCOMPANY PLANS DATED 3-28-16

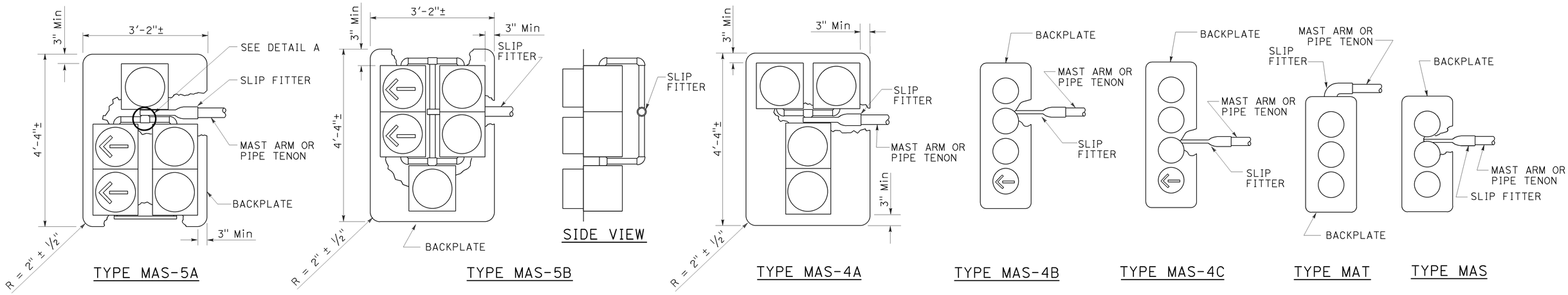

MAST ARM MOUNTINGS

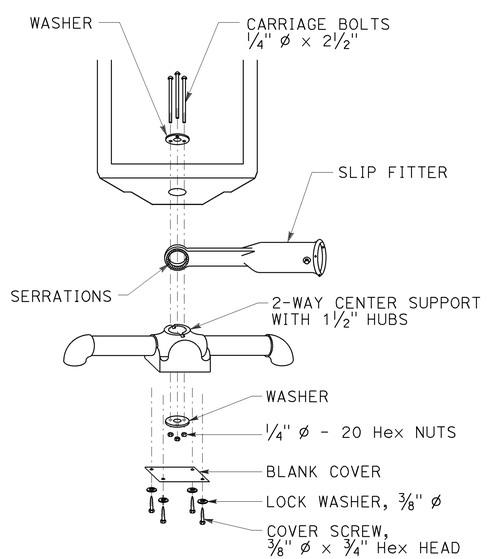

DETAIL A

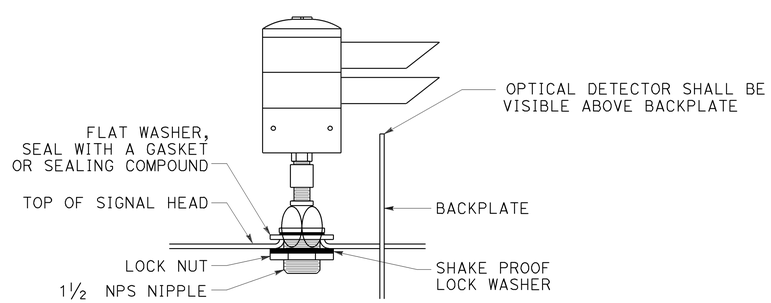

OPTICAL DETECTOR MOUNTING FOR EMERGENCY VEHICLE DETECTION

DETAIL B

STATE OF CALIFORNIA
DEPARTMENT OF TRANSPORTATION

ELECTRICAL SYSTEMS (SIGNAL HEADS AND OPTICAL DETECTOR MOUNTING)

NO SCALE

RSP ES-4E DATED OCTOBER 30, 2015 SUPERSEDES RSP ES-4E DATED JULY 19, 2013 AND STANDARD PLAN ES-4E DATED MAY 20, 2011 - PAGE 447 OF THE STANDARD PLANS BOOK DATED 2010.

REVISED STANDARD PLAN RSP ES-4E

2010 REVISED STANDARD PLAN RSP ES-4E

8-19-15

Dist	COUNTY	ROUTE	POST MILES TOTAL PROJECT	SHEET No.	TOTAL SHEETS
07	LA	138	44.9	43	57

Theresa Gabriel
REGISTERED ELECTRICAL ENGINEER

October 30, 2015
PLANS APPROVAL DATE

REGISTERED PROFESSIONAL ENGINEER Theresa Aziz Gabriel No. E15129 Exp. 6-30-16 ELECTRICAL STATE OF CALIFORNIA

THE STATE OF CALIFORNIA OR ITS OFFICERS OR AGENTS SHALL NOT BE RESPONSIBLE FOR THE ACCURACY OR COMPLETENESS OF SCANNED COPIES OF THIS PLAN SHEET.

TO ACCOMPANY PLANS DATED 3-28-16

2010 REVISED STANDARD PLAN RSP ES-5A

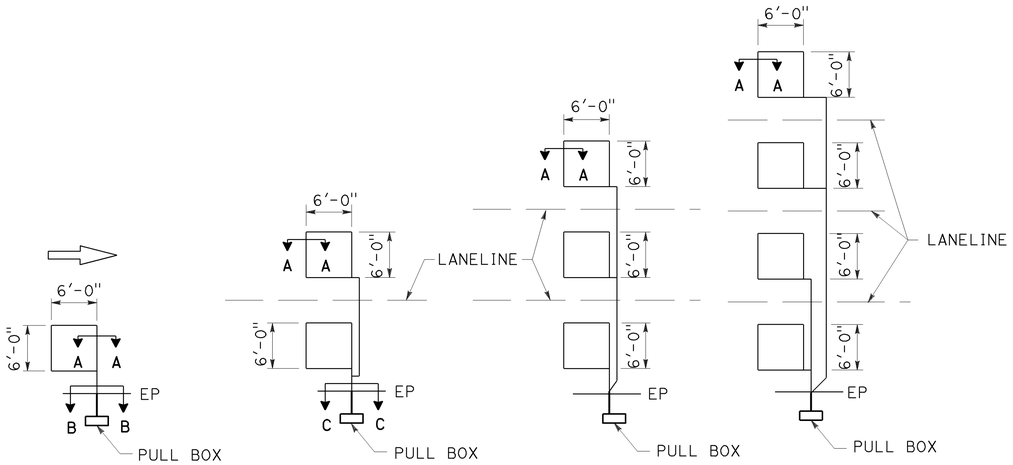

TYPE 1A INSTALLATION | TYPE 2A INSTALLATION | TYPE 3A INSTALLATION | TYPE 4A INSTALLATION

SAWCUT DETAILS

Type A loop detector configurations illustrated

1. 1A thru 4A = 1 Type A loop configuration in each lane.
2. 1B thru 4B = 1 Type B loop configuration in each lane.
3. 1C = 1 Type C loop configuration entering lanes as required.
4. 1D thru 4D = 1 Type D loop configuration in each lane.
5. 1E thru 4E = 1 Type E loop configuration in each lane.
6. 1Q thru 4Q = 1 Type Q loop configuration in each lane.
   Use Type A, B, C, D, E or Q loop detector configurations only when specified or shown on plans.

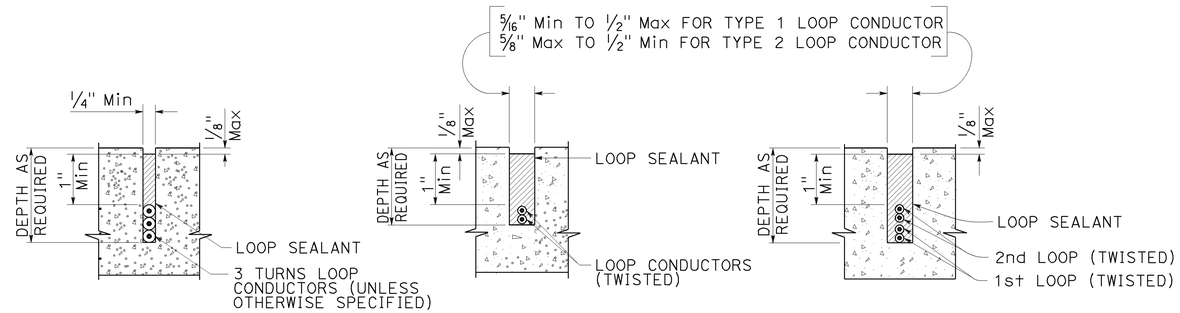

SECTION A-A | SECTION B-B | SECTION C-C

SLOT DETAILS - TYPE 1 AND TYPE 2 LOOP CONDUCTOR

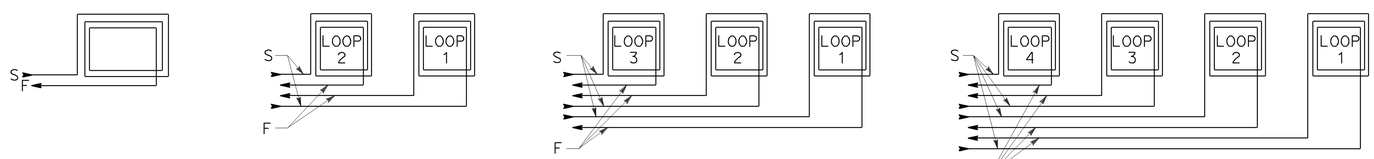

WINDING DETAILS

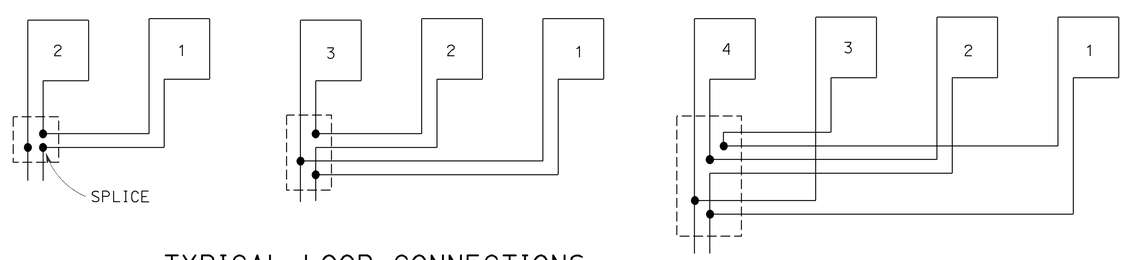

TYPICAL LOOP CONNECTIONS

Dashed lines represent the pull box

ABBREVIATIONS:

S - START
F - FINISH

STATE OF CALIFORNIA
DEPARTMENT OF TRANSPORTATION

ELECTRICAL SYSTEMS (LOOP DETECTORS)

NO SCALE

RSP ES-5A DATED OCTOBER 30, 2015 SUPERSEDES STANDARD PLAN ES-5A DATED MAY 20, 2011 - PAGE 448 OF THE STANDARD PLANS BOOK DATED 2010.

REVISED STANDARD PLAN RSP ES-5A

8-24-15

Dist	COUNTY	ROUTE	POST MILES TOTAL PROJECT	SHEET No.	TOTAL SHEETS
07	LA	138	44.9	44	57

Theresa Gabriel
REGISTERED ELECTRICAL ENGINEER

October 30, 2015
PLANS APPROVAL DATE

REGISTERED PROFESSIONAL ENGINEER
Theresa Aziz Gabriel
No. E15129
Exp. 6-30-16
ELECTRICAL
STATE OF CALIFORNIA

THE STATE OF CALIFORNIA OR ITS OFFICERS OR AGENTS SHALL NOT BE RESPONSIBLE FOR THE ACCURACY OR COMPLETENESS OF SCANNED COPIES OF THIS PLAN SHEET.

TO ACCOMPANY PLANS DATED 3-28-16

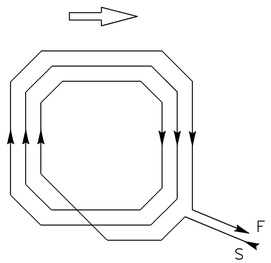

WINDING DETAIL

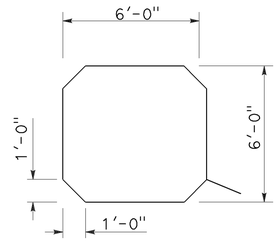

SAWCUT DETAIL

TYPE A LOOP DETECTOR CONFIGURATION

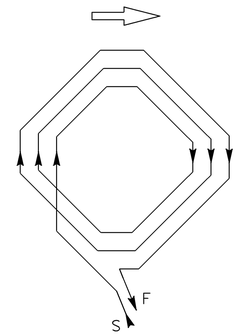

WINDING DETAIL

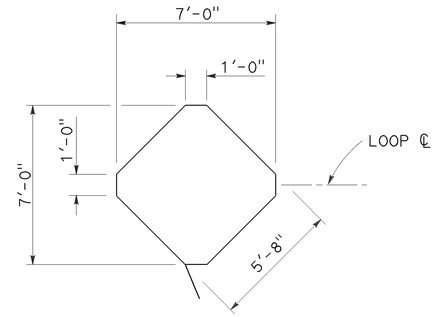

SAWCUT DETAIL

TYPE B LOOP DETECTOR CONFIGURATION

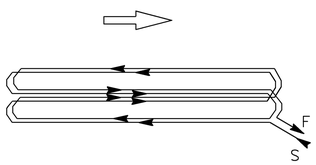

WINDING DETAIL

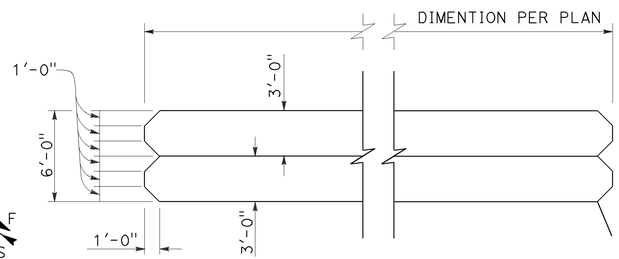

SAWCUT DETAIL

TYPE C LOOP DETECTOR CONFIGURATION

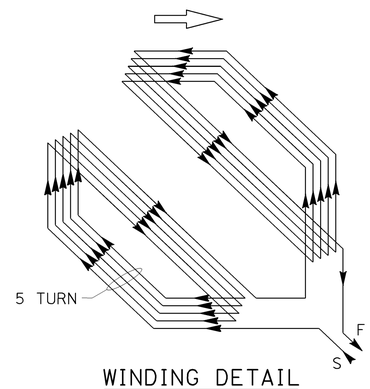

WINDING DETAIL

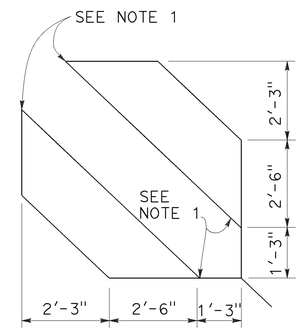

SAWCUT DETAIL

TYPE D LOOP DETECTOR CONFIGURATION

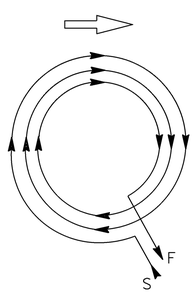

WINDING DETAIL

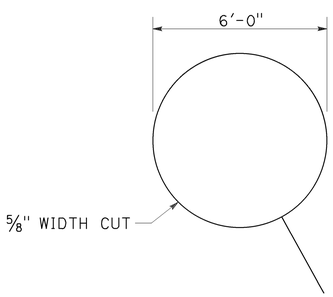

SAWCUT DETAIL

TYPE E LOOP DETECTOR CONFIGURATION

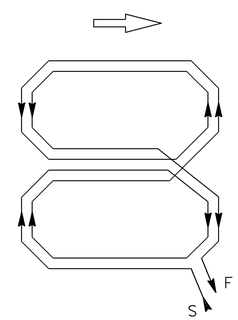

WINDING DETAIL

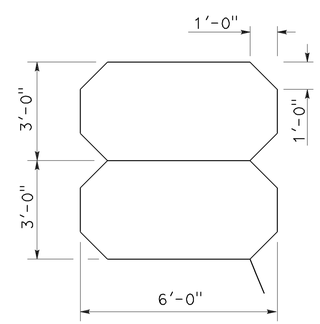

SAWCUT DETAIL

TYPE Q LOOP DETECTOR CONFIGURATION

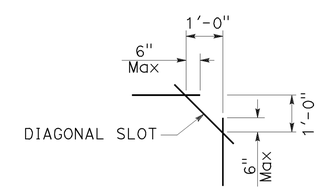

PLAN VIEW OF DIAGONAL SLOT AT CORNERS

NOTES:

1. Round corners of acute angle sawcuts to prevent damage to conductors.
2. Typical distance separating loops from edge to edge is 10' for Type A, B, D and E installation in single lane.
3. Use Type D loops for limit line detector installations in left turn and bicycle lanes.

STATE OF CALIFORNIA
DEPARTMENT OF TRANSPORTATION

ELECTRICAL SYSTEMS (DETECTORS)

NO SCALE

RSP ES-5B DATED OCTOBER 30, 2015 SUPERSEDES RSP ES-5B DATED JULY 19, 2013 AND STANDARD PLAN ES-5B DATED MAY 20, 2011 - PAGE 449 OF THE STANDARD PLANS BOOK DATED 2010.

REVISED STANDARD PLAN RSP ES-5B

2010 REVISED STANDARD PLAN RSP ES-5B

9-25-15

Dist	COUNTY	ROUTE	POST MILES TOTAL PROJECT	SHEET No.	TOTAL SHEETS
07	LA	138	44.9	45	57

Theresa Gabriel
REGISTERED ELECTRICAL ENGINEER

October 30, 2015
PLANS APPROVAL DATE

REGISTERED PROFESSIONAL ENGINEER
Theresa Aziz Gabriel
No. E15129
Exp. 6-30-16
ELECTRICAL
STATE OF CALIFORNIA

THE STATE OF CALIFORNIA OR ITS OFFICERS OR AGENTS SHALL NOT BE RESPONSIBLE FOR THE ACCURACY OR COMPLETENESS OF SCANNED COPIES OF THIS PLAN SHEET.

TO ACCOMPANY PLANS DATED 3-28-16

2010 REVISED STANDARD PLAN RSP ES-5C

NOTES:

1. Back casting shape to fit curvature of pole.
2. Provide cover fitting for top of post, when PBA is mounted on push button assembly post.
3. Install push button on crosswalk side of standard.
4. Use R10 series regulatory signs and plaques for pedestrian and bicycle facilities.

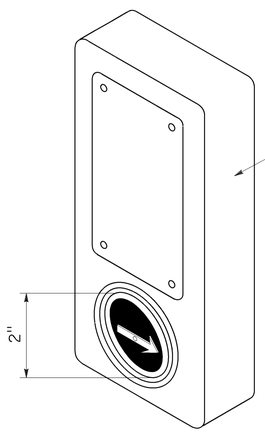

ACCESSIBLE PEDESTRIAN SIGNAL

DETAIL A

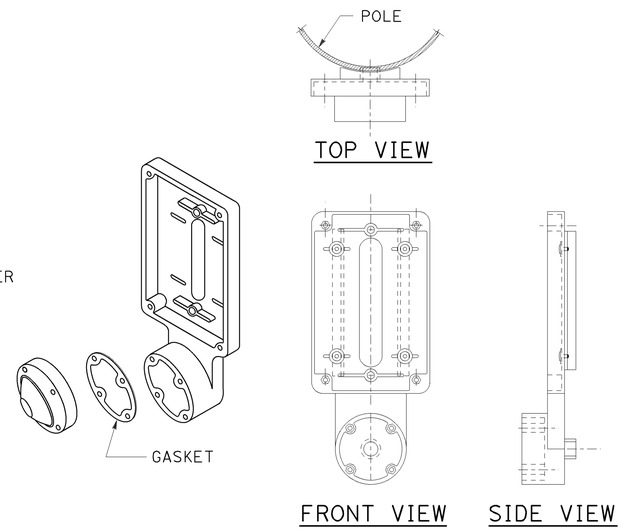

TYPE B PUSH BUTTON ASSEMBLY

DETAIL B

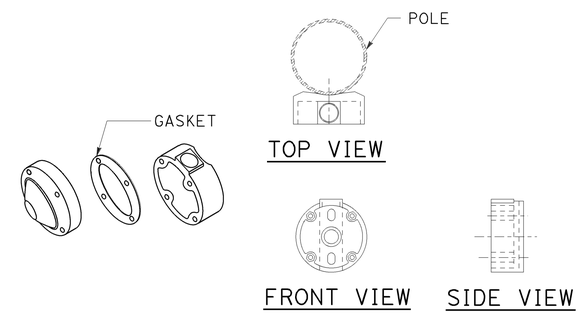

TYPE C PUSH BUTTON ASSEMBLY

DETAIL C

STATE OF CALIFORNIA
DEPARTMENT OF TRANSPORTATION

ELECTRICAL SYSTEMS (ACCESSIBLE PEDESTRIAN SIGNAL AND PUSH BUTTON ASSEMBLIES)

NO SCALE

RSP ES-5C DATED OCTOBER 30, 2015 SUPERSEDES RSP ES-5C DATED JULY 19, 2013 AND STANDARD PLAN ES-5C DATED MAY 20, 2011 - PAGE 450 OF THE STANDARD PLANS BOOK DATED 2010.

REVISED STANDARD PLAN RSP ES-5C

Dist	COUNTY	ROUTE	POST MILES TOTAL PROJECT	SHEET No.	TOTAL SHEETS
07	LA	138	44.9	46	57

Theresa Gabriel
REGISTERED ELECTRICAL ENGINEER

October 30, 2015
PLANS APPROVAL DATE

REGISTERED PROFESSIONAL ENGINEER Theresa Aziz Gabriel No. E15129 Exp. 6-30-16 ELECTRICAL STATE OF CALIFORNIA

THE STATE OF CALIFORNIA OR ITS OFFICERS OR AGENTS SHALL NOT BE RESPONSIBLE FOR THE ACCURACY OR COMPLETENESS OF SCANNED COPIES OF THIS PLAN SHEET.

TO ACCOMPANY PLANS DATED 3-28-16

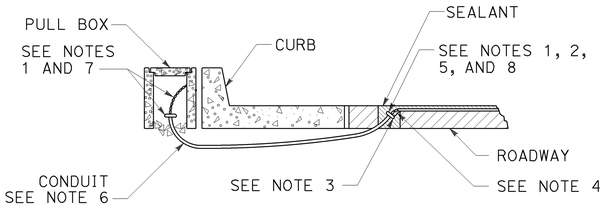

TYPE A
CURB TERMINATION DETAIL

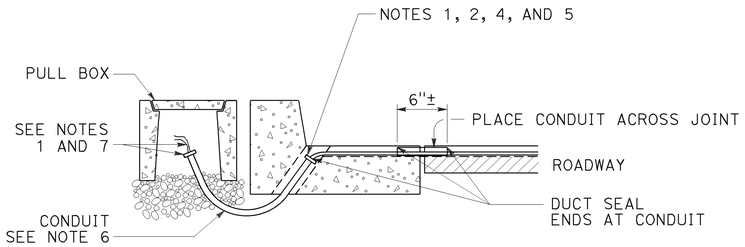

CROSS SECTION

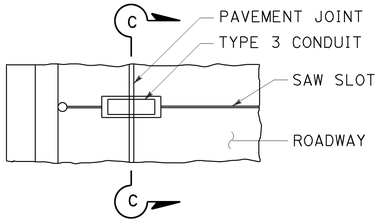

PLAN VIEW

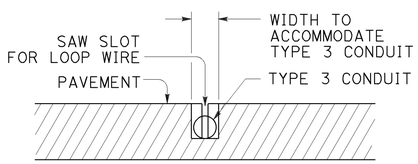

SECTION C-C

TYPE B
CURB TERMINATION DETAIL

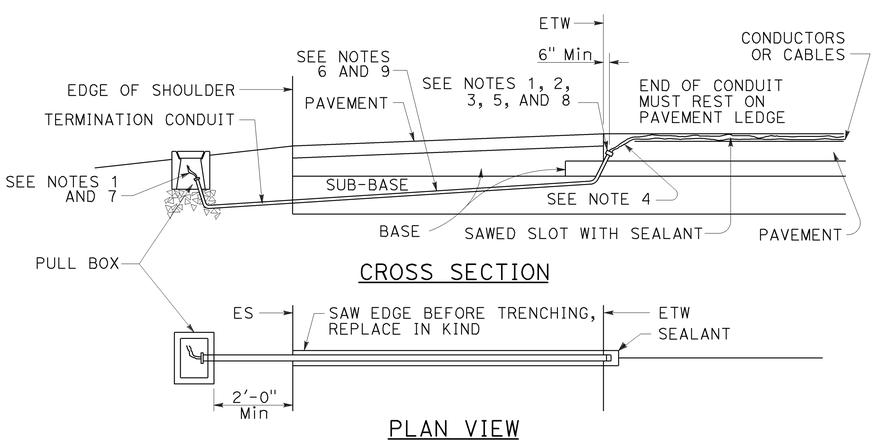

CROSS SECTION

PLAN VIEW

SHOULDER TERMINATION DETAILS

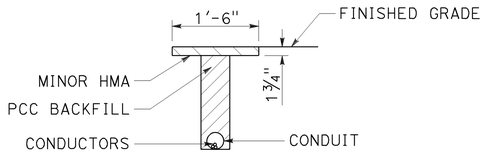

"T" TRENCH
DETAIL T

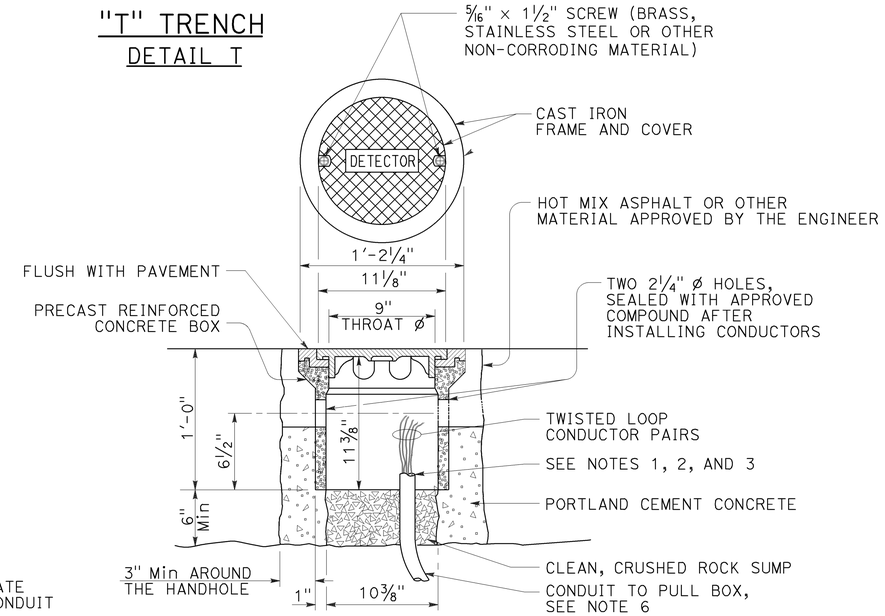

DETECTOR HANDHOLE DETAIL

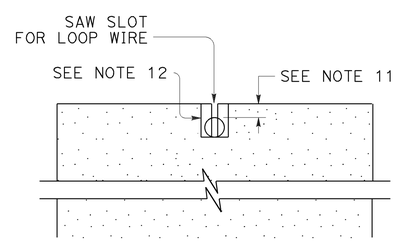

SECTION A-A

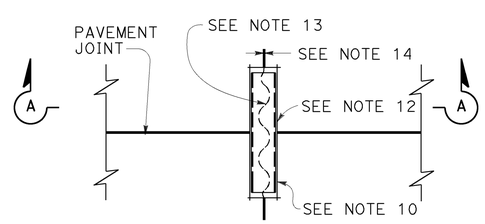

PLAN VIEW

TYPICAL LOOP LEAD-IN DETAIL AT PAVEMENT JOINT

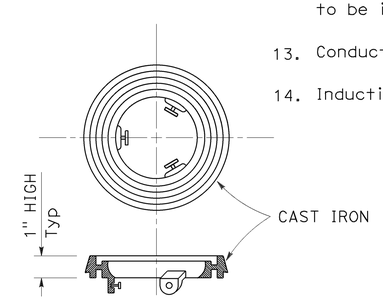

LOCKING GRADE RING

NOTES:

1. Bushing shall be used at end of conduit.
2. Tape detector conductors or cables 3" each side of bushings.
3. Install duct seal compound to each end of termination conduit before installing sealant.
4. Round all sharp edges where detector conductors or cables have to pass.
5. End of conduit shall be 3⅛" below roadway surface.
6.

Conduit size	Loop conductors
1"C minimum	1 to 2 pairs
1½"C minimum	3 to 4 pairs
2"C minimum	5 or more pairs

7. Splice detector conductors or cables to detector lead-in-cable.
8. Location of detector handhole when shown on plans.
9. When the shoulder and traveled way are paved with the same material and there is no joint between them, the conduit shall extend only 2'-0" into the shoulder pavement.
10. ¾"C, Type 3 conduit 6" long minimum, plug both ends with duct compound to keep out sealant.
11. ½" Minimum between top of conduit and pavement surface.
12. Sawcut shall not exceed 1" in width and ⅛" longer than conduit to be installed.
13. Conductors with ½" minimum slack inside conduit.
14. Inductive loop detector saw slot.

STATE OF CALIFORNIA
DEPARTMENT OF TRANSPORTATION

ELECTRICAL SYSTEMS (CURB AND SHOULDER TERMINATION, TRENCH, AND HANDHOLE DETAILS)

NO SCALE

RSP ES-5D DATED OCTOBER 30, 2015 SUPERSEDES RSP ES-5D DATED JULY 19, 2013 AND STANDARD PLAN ES-5D DATED MAY 20, 2011 - PAGE 451 OF THE STANDARD PLANS BOOK DATED 2010.

REVISED STANDARD PLAN RSP ES-5D

2010 REVISED STANDARD PLAN RSP ES-5D

8-19-15

Dist	COUNTY	ROUTE	POST MILES TOTAL PROJECT	SHEET No.	TOTAL SHEETS
07	LA	138	44.9	47	57

REGISTERED CIVIL ENGINEER

October 30, 2015
PLANS APPROVAL DATE

REGISTERED PROFESSIONAL ENGINEER
Stanley P. Johnson
No. C57793
Exp. 3-31-16
CIVIL
STATE OF CALIFORNIA

THE STATE OF CALIFORNIA OR ITS OFFICERS OR AGENTS SHALL NOT BE RESPONSIBLE FOR THE ACCURACY OR COMPLETENESS OF SCANNED COPIES OF THIS PLAN SHEET.

TO ACCOMPANY PLANS DATED 3-28-16

2010 REVISED STANDARD PLAN RSP ES-7A

NOTES:

1. For additional notes, details and data for Type 15TS and Type 21TS Standards, see Revised Standard Plan RSP ES-6A.
2. Handhole shall be located on the downstream side of traffic.

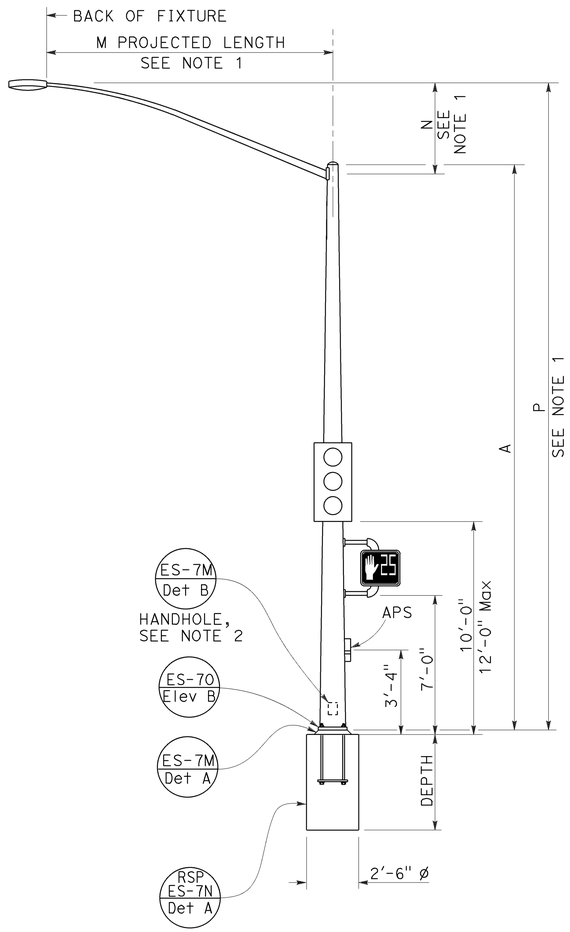

TYPE 15TS AND 21TS STANDARD

ELEVATION A

(See Note 1)

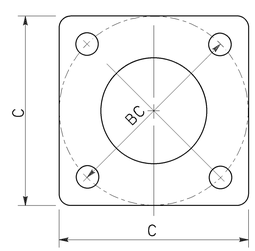

BASE PLATE

TYPE 15TS AND 21TS

DETAIL A

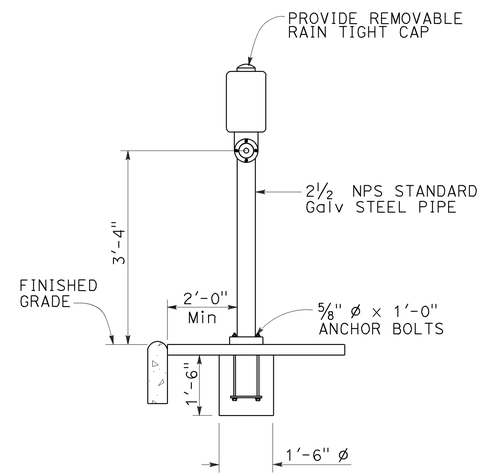

ELEVATION

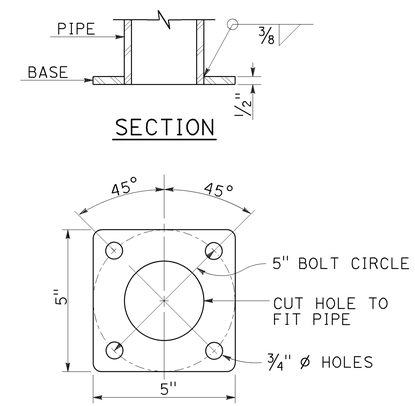

BASE PLATE

PBA POST

PUSH BUTTON ASSEMBLY POST

DETAIL B

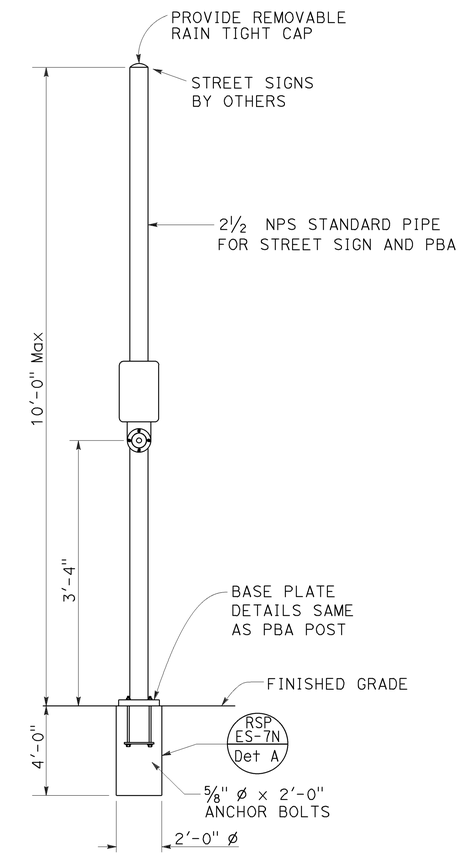

COMBINED STREET SIGN

PUSH BUTTON ASSEMBLY POST

DETAIL C

POLE TYPE	POLE DATA				BASE PLATE DATA				CIDH
	A HEIGHT	Min OD BASE	Min OD TOP	WALL THICKNESS	C	BC = BOLT CIRCLE	THICKNESS	ANCHOR BOLT SIZE	DEPTH
15TS	30'-0"	8"	3 11/16"	0.1793"	1'-1½"	1'-0"	2"	1½" ø x 42"	7'-6"
21TS	35'-0"	9⅜"	3 9/16"		1'-3"	1'-2"			8'-6"

STATE OF CALIFORNIA
DEPARTMENT OF TRANSPORTATION

ELECTRICAL SYSTEMS (SIGNAL AND LIGHTING STANDARD, TYPE TS, AND PUSH BUTTON ASSEMBLY POST)

NO SCALE

RSP ES-7A DATED OCTOBER 30, 2015 SUPERSEDES RSP ES-7A DATED JULY 19, 2013 AND STANDARD PLAN ES-7A DATED MAY 20, 2011 - PAGE 462 OF THE STANDARD PLANS BOOK DATED 2010.

REVISED STANDARD PLAN RSP ES-7A

8-24-15

Dist	COUNTY	ROUTE	POST MILES TOTAL PROJECT	SHEET No.	TOTAL SHEETS
07	LA	138	44.9	48	57

REGISTERED CIVIL ENGINEER

October 30, 2015
PLANS APPROVAL DATE

REGISTERED PROFESSIONAL ENGINEER Stanley P. Johnson No. C57793 Exp. 3-31-16 CIVIL STATE OF CALIFORNIA

THE STATE OF CALIFORNIA OR ITS OFFICERS OR AGENTS SHALL NOT BE RESPONSIBLE FOR THE ACCURACY OR COMPLETENESS OF SCANNED COPIES OF THIS PLAN SHEET.

TO ACCOMPANY PLANS DATED 3-28-16

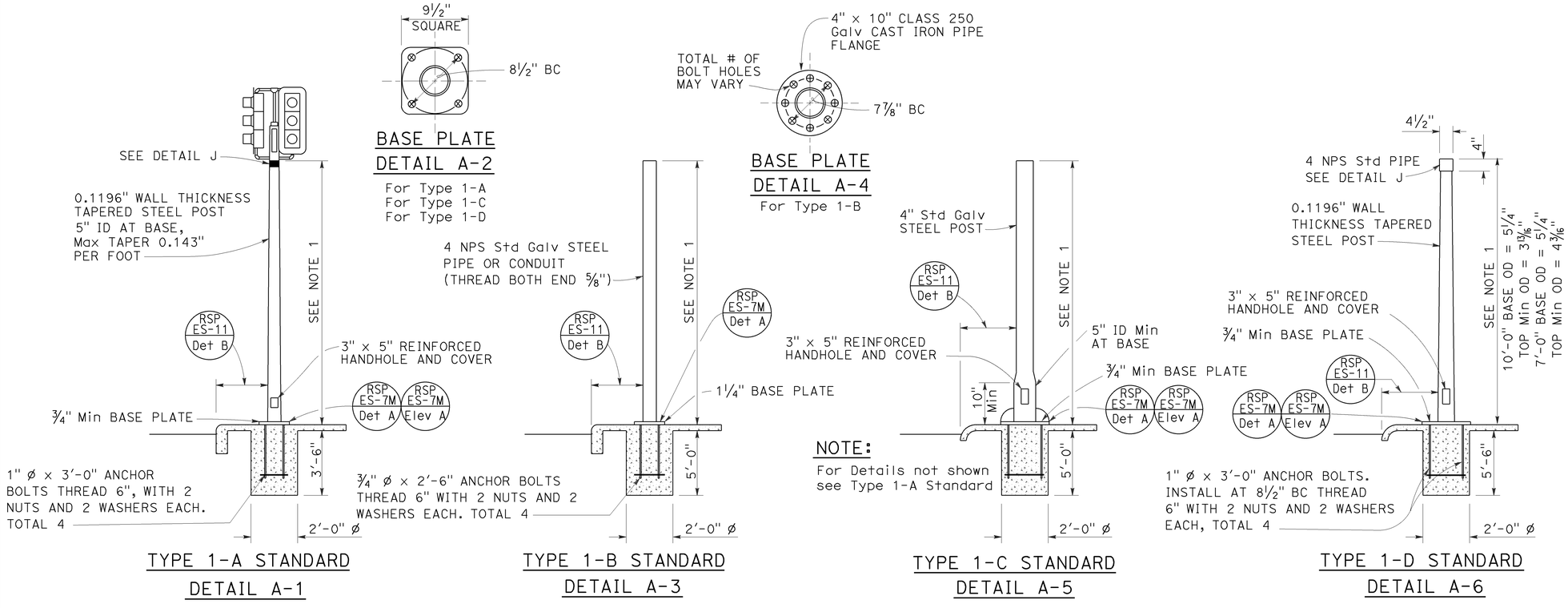

TYPE 1 SIGNAL STANDARDS
DETAIL A

NOTES:

1. Standards shall be 10'-0" ± 2" for vehicle signals and 7'-0" ± 2" for pedestrian signals unless shorter pole is noted on project plans.
2. Top of standards shall be 4½" OD.
3. Conduits shall extend 2" maximum above finished surface of foundation and for Types 1-A, 1-C and 1-D shall be sloped toward handhole.
4. Anchor bolts shall be bonded to conduit or grounding conductor.
5. For additional notes and details, see Revised Standard Plans RSP ES-7M and RSP ES-7N.
6. Pour foundation concrete against undisturbed soil.
7. For standards with handhole, locate in the downstream side of traffic.
8. Coupling nuts to be used only when shown or specified on project plans.

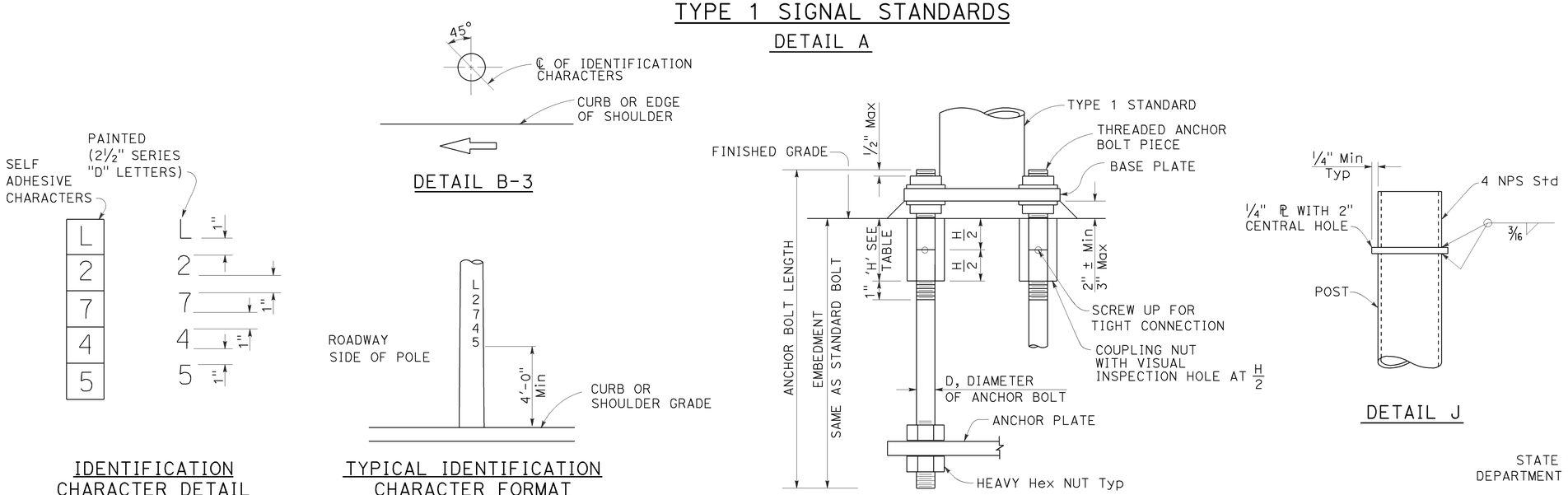

COUPLING NUT TABLE	
BOLT DIAMETER	NUT TABLE THICKNESS 'H'
¾"	2¼"
1"	3"

LOCATION OF EQUIPMENT IDENTIFICATION CHARACTERS ON STANDARDS AND POSTS
DETAIL B

STATE OF CALIFORNIA
DEPARTMENT OF TRANSPORTATION

ELECTRICAL SYSTEMS (SIGNAL AND LIGHTING STANDARD, TYPE 1 AND EQUIPMENT IDENTIFICATION CHARACTERS)

NO SCALE

RSP ES-7B DATED OCTOBER 30, 2015 SUPERSEDES STANDARD PLAN ES-7B DATED MAY 20, 2011 - PAGE 463 OF THE STANDARD PLANS BOOK DATED 2010.

REVISED STANDARD PLAN RSP ES-7B

2010 REVISED STANDARD PLAN RSP ES-7B

10-8-15

Dist	COUNTY	ROUTE	POST MILES TOTAL PROJECT	SHEET No.	TOTAL SHEETS
07	LA	138	44.9	49	57

REGISTERED CIVIL ENGINEER

October 30, 2015

PLANS APPROVAL DATE

REGISTERED PROFESSIONAL ENGINEER Stanley P. Johnson No. C57793 Exp. 3-31-16 CIVIL STATE OF CALIFORNIA

THE STATE OF CALIFORNIA OR ITS OFFICERS OR AGENTS SHALL NOT BE RESPONSIBLE FOR THE ACCURACY OR COMPLETENESS OF SCANNED COPIES OF THIS PLAN SHEET.

TO ACCOMPANY PLANS DATED 3-28-16

NOTE:

Handhole shall be located on the downstream side of traffic.

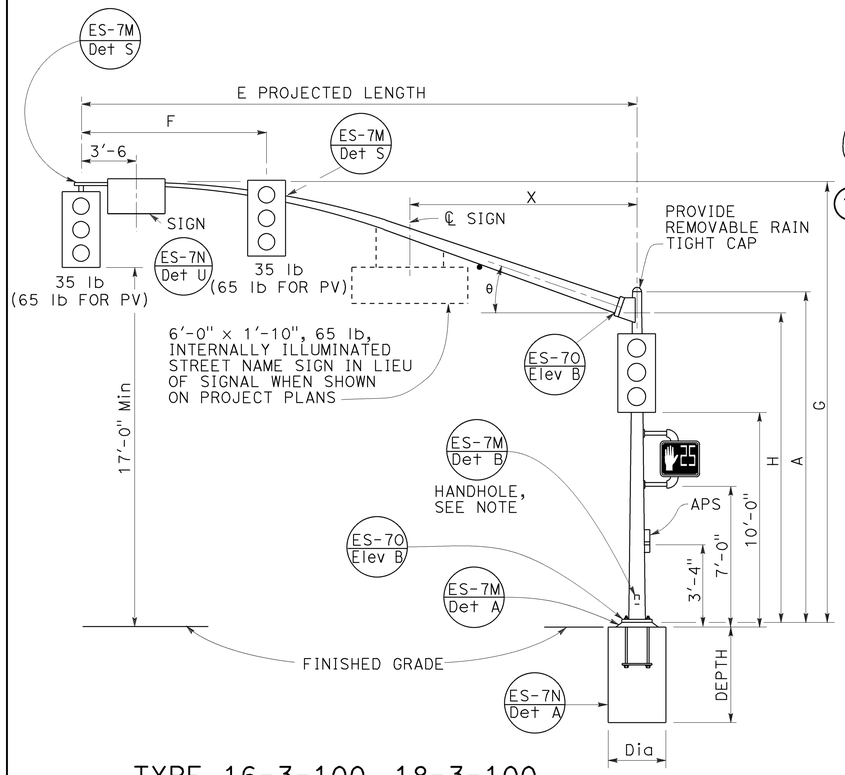

TYPE 16-3-100, 18-3-100, 23-3-100, 27-3-100

ELEVATION A

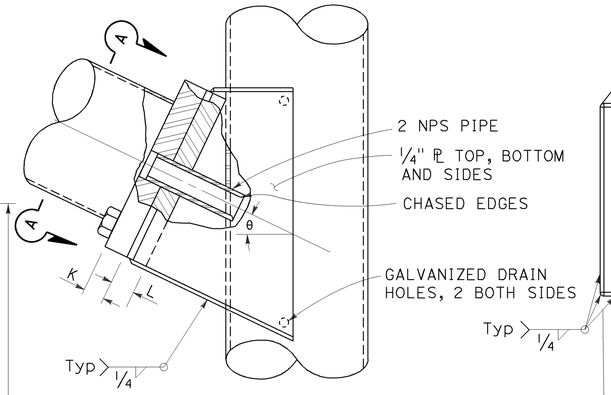

ELEVATION C

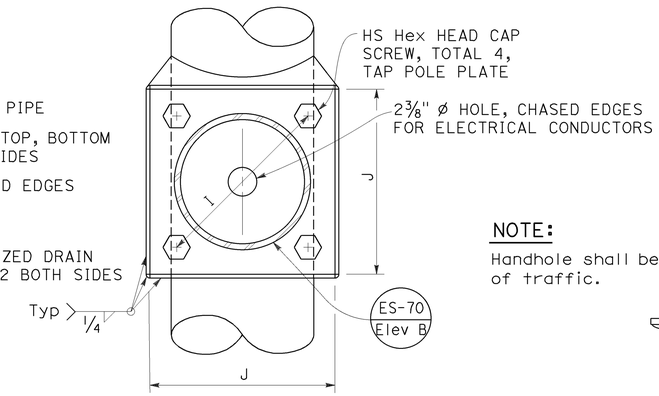

VIEW A-A

SIGNAL MAST ARM CONNECTION

DETAIL A

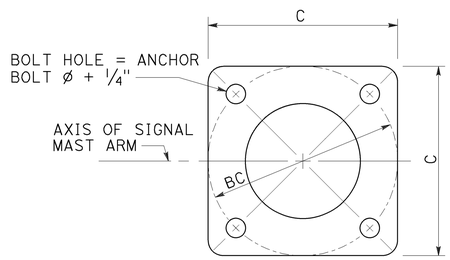

BASE PLATE

DETAIL B

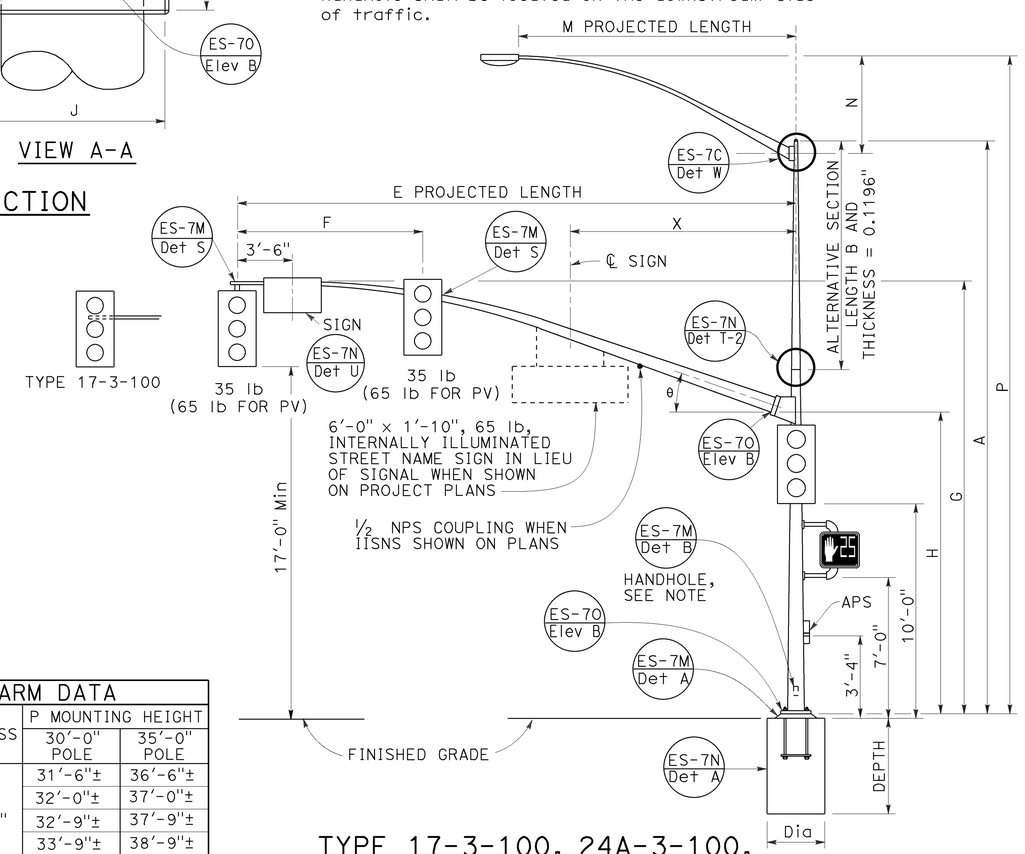

TYPE 17-3-100, 24A-3-100, 19-3-100, 26-3-100, 19A-3-100, 26A-3-100, 24-3-100

ELEVATION B

SIGNAL MAST ARM DATA

E PROJECTED LENGTH	F Min SPACING	G MOUNTING HEIGHT	H	Min OD AT POLE	THICKNESS	I BOLT CIRCLE	HS CAP SCREWS	J PLATE SIZE	K MAST ARM ℙ THICKNESS	L POLE ℙ THICKNESS	θ	X Max
15'-0"	8'-0"	21'-8"±	17'-6"	7 3/8"	0.1793"	12"	1 1/4"-7NC-3"	1'-0"	1 1/4"	1 1/2"	23°	-
20'-0"		21'-8"±		7 3/8"								
25'-0"	12'-0"	22'-8"±	16'-0"	7 3/8"	0.2391"							10'-6"
30'-0"		23'-0"±		8"								
35'-0"	14'-0"			8 3/4"		13"		1'-1"	1 1/2"	1 3/4"	21°	
40'-0"	15'-0"			9 3/8"							15°	13'-0"
45'-0"		23'-8"±		10 1/16"								

LUMINAIRE MAST ARM DATA

M PROJECTED LENGTH	N RISE	Min OD AT POLE	THICKNESS	P MOUNTING HEIGHT 30'-0" POLE	P MOUNTING HEIGHT 35'-0" POLE
6'-0"	2'-0"±	3 1/4"	0.1196"	31'-6"±	36'-6"±
8'-0"	2'-6"±	3 1/2"		32'-0"±	37'-0"±
10'-0"	3'-3"±	3 7/8"		32'-9"±	37'-9"±
12'-0"	4'-3"±			33'-9"±	38'-9"±
15'-0"	4'-9"±	4 1/4"		34'-3"±	39'-3"±

POLE DATA / BASE PLATE DATA / CIDH PILE FOUNDATION

POLE TYPE	LOAD CASE	WIND VELOCITY (mph)	A HEIGHT	Min OD BASE	Min OD TOP	THICKNESS	ALTERNATIVE SECTION B LENGTH	ALTERNATIVE SECTION BOTTOM	ALTERNATIVE SECTION TOP	C	BC = BOLT CIRCLE	THICKNESS	ANCHOR BOLT SIZE	LUMINAIRE MAST ARM	SIGNAL MAST ARM	CIDH DIAMETER	CIDH DEPTH	CIDH REINFORCED
16-3-100	3	100	18'-6"	10 3/4"	8 1/16"	0.1793"	NONE			1'-5 1/2"	1'-5 1/2"	3"	1 1/2" ø x 42"	NONE	15'-0", [20'-0"]	3'-0"	8'-6"	YES
17-3-100			30'-0"		6 7/16"		10'-0"	7 7/8"	6 7/16"					6'-15' [12'-0"]				
18-3-100			17'-0"	1'-0"	8 5/16"	0.2391"	NONE			1'-7"			2" ø x 42"	NONE	25'-0", [30'-0"]		9'-6"	
19-3-100			30'-0"		7 11/16"		10'-0"	9 1/8"	7 11/16"					6'-15' [12'-0"]			11'-0"	
19A-3-100			35'-0"		6 15/16"		15'-0"		6 15/16"					6'-15' [15'-0"]				
23-3-100			17'-0"		9 9/16"		NONE							NONE	35'-0"			
24-3-100			30'-0"		7 11/16"		10'-0"	9 1/8"	7 11/16"					6'-15' [12'-0"]				
24A-3-100			35'-0"		6 15/16"		15'-0"		6 15/16"					6'-15' [15'-0"]				
26-3-100			30'-0"	1'-2"	7 13/16"	0.3125"	10'-0"	9 1/4"	7 13/16"	1'-11"	1'-9"		2 1/2" ø x 42"	6'-15' [12'-0"]	40'-0", [45'-0"]	3'-6"	12'-0"	
26A-3-100			35'-0"		7 1/16"		15'-0"		7 1/16"					6'-15' [15'-0"]				
27-3-100			17'-0"		9 11/16"		NONE							NONE				

[ ] INDICATES MAST ARM LENGTH TO BE USED UNLESS OTHERWISE NOTED ON PLANS.

STATE OF CALIFORNIA
DEPARTMENT OF TRANSPORTATION

ELECTRICAL SYSTEMS (SIGNAL AND LIGHTING STANDARD, CASE 3 SIGNAL MAST ARM LOADING, WIND VELOCITY=100 MPH AND SIGNAL MAST ARM LENGTHS 15' TO 45')

NO SCALE

RSP ES-7E DATED OCTOBER 30, 2015 SUPERSEDES RSP ES-7E DATED JULY 19, 2013 AND ES-7E DATED MAY 20, 2011 - PAGE 466 OF THE STANDARD PLANS BOOK DATED 2010.

REVISED STANDARD PLAN RSP ES-7E

2010 REVISED STANDARD PLAN RSP ES-7E

8-24-15

Dist	COUNTY	ROUTE	POST MILES TOTAL PROJECT	SHEET No.	TOTAL SHEETS
07	LA	138	44.9	50	57

REGISTERED CIVIL ENGINEER

October 30, 2015
PLANS APPROVAL DATE

REGISTERED PROFESSIONAL ENGINEER Stanley P. Johnson No. C57793 Exp. 3-31-16 CIVIL STATE OF CALIFORNIA

THE STATE OF CALIFORNIA OR ITS OFFICERS OR AGENTS SHALL NOT BE RESPONSIBLE FOR THE ACCURACY OR COMPLETENESS OF SCANNED COPIES OF THIS PLAN SHEET.

TO ACCOMPANY PLANS DATED 3-28-16

NOTE:
Handhole shall be located on the downstream side of traffic.

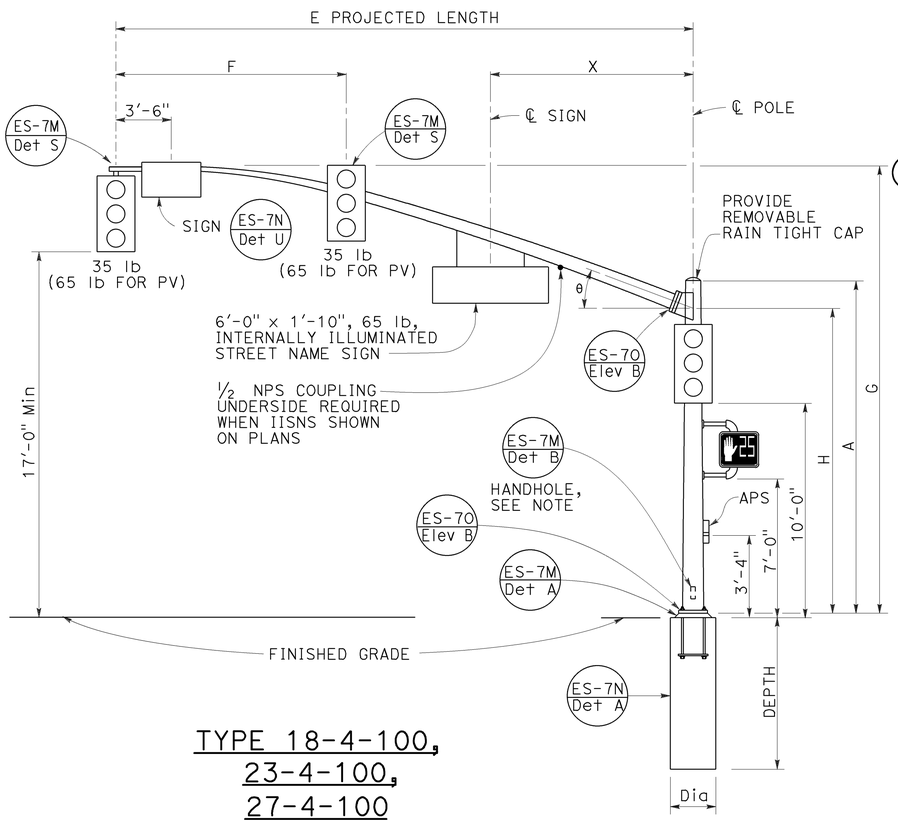

TYPE 18-4-100,
23-4-100,
27-4-100
ELEVATION A

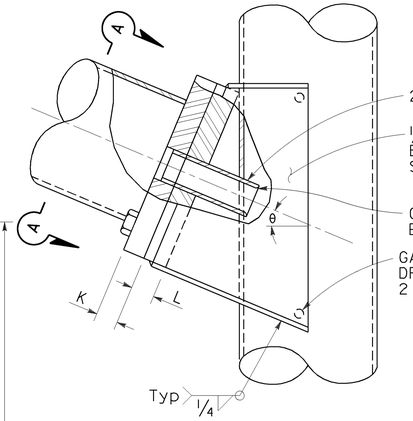

ELEVATION C

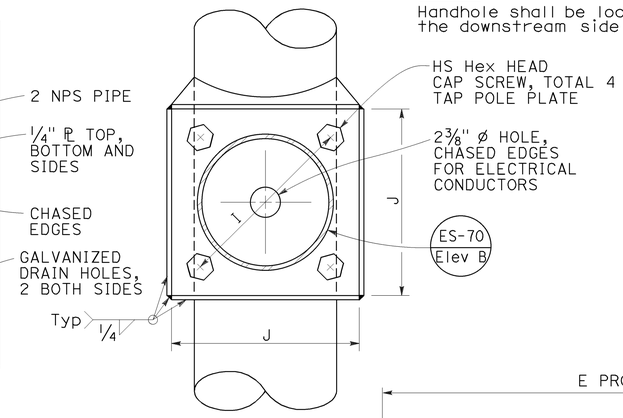

VIEW A-A

SIGNAL MAST ARM CONNECTION
DETAIL A

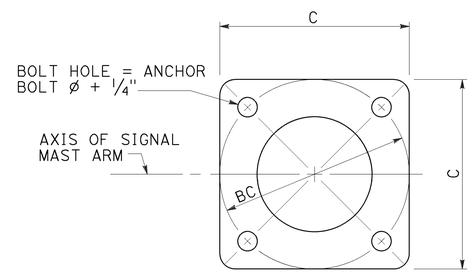

BASE PLATE
DETAIL B

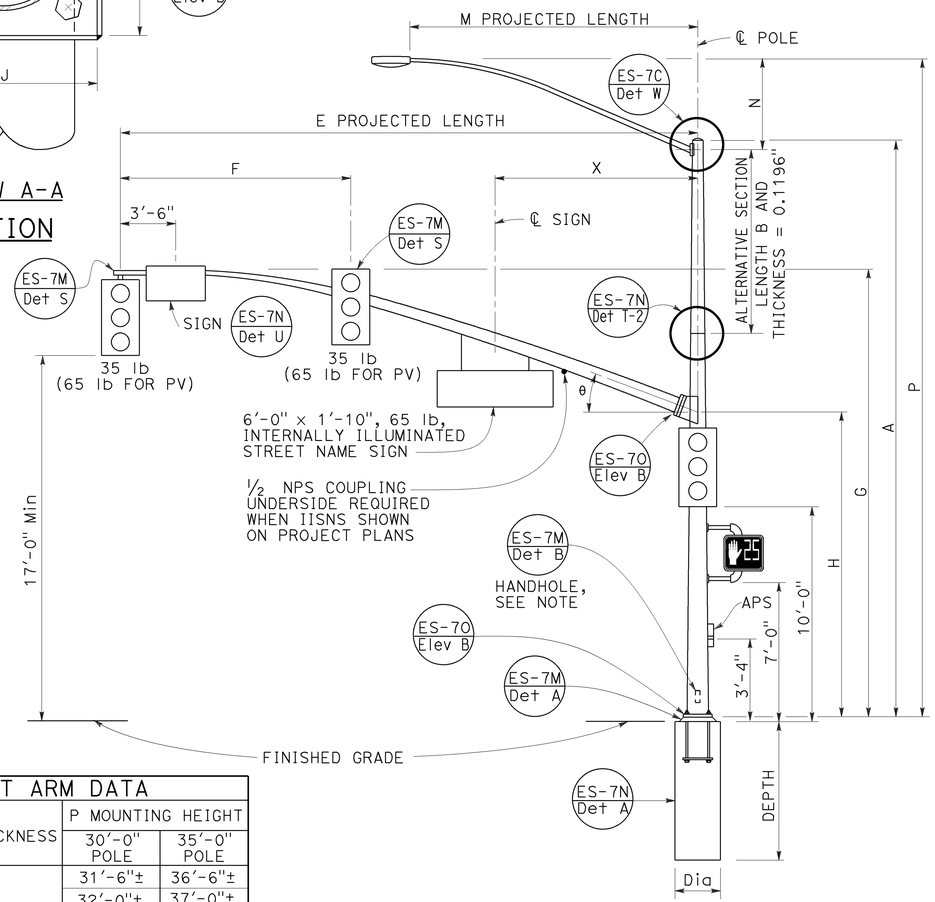

TYPE 19-4-100, 19A-4-100,
24-4-100, 24A-4-100,
26-4-100, 26A-4-100
ELEVATION B

SIGNAL MAST ARM DATA

E PROJECTED LENGTH	F Min SPACING	G MOUNTING HEIGHT	H	Min OD AT POLE	THICKNESS	I BOLT CIRCLE	HS CAP SCREWS	J PLATE SIZE	K MAST ARM PL THICKNESS	L POLE PL THICKNESS	θ	X Max
25'-0"	10'-0"	22'-8"±	16'-0"	7 3/8"	0.2391"	12"	1 1/4"-7NC-3"	1'-0"	1 1/4"	1 1/2"	23°	10'-6"
30'-0"	12'-0"	23'-0"±		8"								
35'-0"	14'-0"			8 11/16"		13 1/2"		1'-1 1/2"	1 1/2"	1 3/4"	21°	
40'-0"	15'-0"			9 3/8"							15°	13'-0"
45'-0"		23'-8"±		10 1/4"								

LUMINAIRE MAST ARM DATA

M PROJECTED LENGTH	N RISE	Min OD AT POLE	THICKNESS	P MOUNTING HEIGHT 30'-0" POLE	P MOUNTING HEIGHT 35'-0" POLE
6'-0"	2'-0"±	3 1/4"	0.1196"	31'-6"±	36'-6"±
8'-0"	2'-6"±	3 1/2"		32'-0"±	37'-0"±
10'-0"	3'-3"±	3 7/8"		32'-9"±	37'-9"±
12'-0"	4'-3"±			33'-9"±	38'-9"±
15'-0"	4'-9"±	4 1/4"		34'-3"±	39'-3"±

POLE DATA / BASE PLATE DATA / CIDH PILE FOUNDATION

POLE TYPE	LOAD CASE	WIND VELOCITY (mph)	A HEIGHT	Min OD BASE	Min OD TOP	THICKNESS	ALTERNATIVE SECTION B LENGTH	ALTERNATIVE SECTION BOTTOM	ALTERNATIVE SECTION TOP	C	BC = BOLT CIRCLE	THICKNESS	ANCHOR BOLT SIZE	LUMINAIRE MAST ARM	SIGNAL MAST ARM	Dia	DEPTH	REINFORCED
18-4-100	4	100	17'-0"	12 1/8"	9 9/16"	0.3125"	NONE			1'-7"	1'-5 1/2"	3"	2" Ø x 42"	NONE	25'-0", 30'-0"	3'-0"	11'-0"	YES
19-4-100			30'-0"		7 11/16"		10'-0"	9 1/8"	7 11/16"					6'-15' 12'-0"				
19A-4-100			35'-0"		6 15/16"		15'-0'		6 15/16"					6'-15' 15'-0"				
23-4-100			17'-0"		9 9/16"		NONE							NONE	35'-0"			
24-4-100			30'-0"		7 11/16"		10'-0"	9 1/8"	7 11/16"					6'-15' 12'-0"				
24A-4-100			35'-0"		6 15/16"		15'-0"		6 15/16"					6'-15' 15'-0"				
26-4-100			30'-0"	14"	8 3/16"		10'-0"	9 5/8"	8 3/16"	23"	21"		2 1/2" Ø x 42"	6'-15' 12'-0"	40'-0", 45'-0"	3'-6"	12'-0"	
26A-4-100			35'-0"		7 7/16"		15'-0"		7 7/16"					6'-15' 15'-0"				
27-4-100			17'-0"		10 1/16"		NONE							NONE				

INDICATES MAST ARM LENGTH TO BE USED UNLESS OTHERWISE NOTED ON PLANS.

STATE OF CALIFORNIA
DEPARTMENT OF TRANSPORTATION

ELECTRICAL SYSTEMS (SIGNAL AND LIGHTING STANDARD, CASE 4 SIGNAL MAST ARM LOADING, WIND VELOCITY=100 MPH AND SIGNAL MAST ARM LENGTHS 25' TO 45')

NO SCALE

RSP ES-7F DATED OCTOBER 30, 2015 SUPERSEDES RSP ES-7F DATED JULY 19, 2013 AND ES-7F DATED MAY 20, 2011 - PAGE 467 OF THE STANDARD PLANS BOOK DATED 2010.

REVISED STANDARD PLAN RSP ES-7F

2010 REVISED STANDARD PLAN RSP ES-7F

8-24-15

Dist	COUNTY	ROUTE	POST MILES TOTAL PROJECT	SHEET No.	TOTAL SHEETS
07	LA	138	44.9	51	57

REGISTERED CIVIL ENGINEER

October 30, 2015
PLANS APPROVAL DATE

REGISTERED PROFESSIONAL ENGINEER Stanley P. Johnson No. C57793 Exp. 3-31-16 CIVIL STATE OF CALIFORNIA

THE STATE OF CALIFORNIA OR ITS OFFICERS OR AGENTS SHALL NOT BE RESPONSIBLE FOR THE ACCURACY OR COMPLETENESS OF SCANNED COPIES OF THIS PLAN SHEET.

TO ACCOMPANY PLANS DATED 3-28-16

2010 REVISED STANDARD PLAN RSP ES-7M

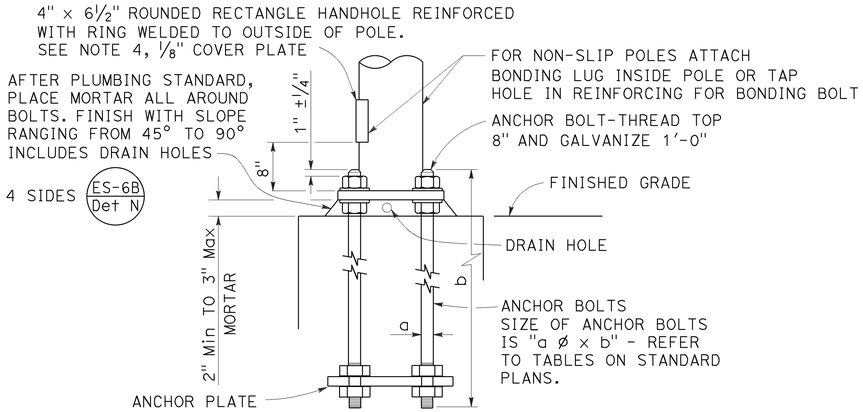

HANDHOLE AND ANCHORAGE
DETAIL A

IDENTIFICATION NUMBER

1. Attach a stamped metal tag with pole's identification number above the handhole. ¼" high number, minimum.
2. Attach a stamped metal tag with mast arm's identification number to the bottom of the signal mast arm near the pole plate. ¼" high number, minimum.

Type — Load case (Use SL for special load case) — Design wind velocity (mph) — Signal mast arm length (ft) { Near handhole: Maximum signal mast arm length for pole type; Near pole plate: Installed signal mast arm length } — Standard plan year — Only for poles or mast arms using Detail F — Only for poles or mast arms using ES-7D

26A - 3 - 100 - 45 - 10 - F or FB

SAMPLE IDENTIFICATION NUMBER

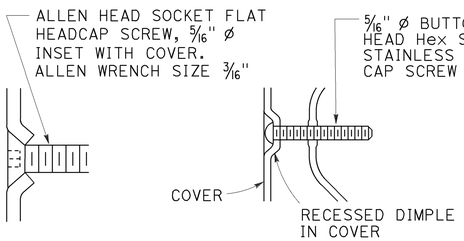

TYPICAL DETAIL
DETAIL B-1

ALTERNATIVE DETAIL
DETAIL B-2

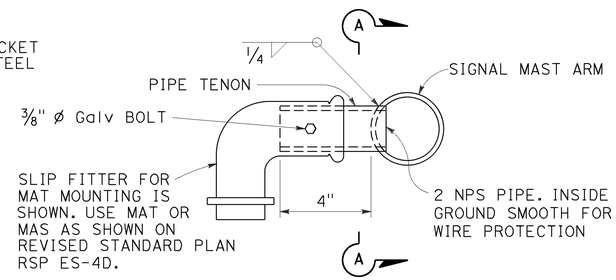

SIDE TENON
DETAIL S-1

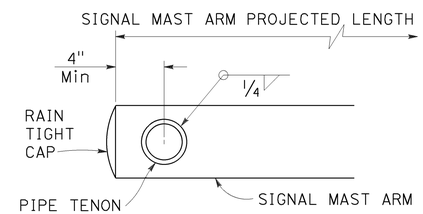

SECTION A-A

PIPE TENONS
DETAIL S

NOTES:

1. Provide a Hex nut, leveling nut and 2 washers for each bolt.
2. Luminaire mast arms shall be round, tapered steel tubes, taper of 0.1375" to 0.143-inch per foot with an end section 2⅜" OD for mounting hardware. Extensions of 2 NPS Standard pipe and 7" long may be used at the option of the manufacturer. When low pressure sodium luminaires are required, the extension shall be 1'-3".
3. Signal mast arms shall be round, tapered steel tubes, maximum taper 0.143-inch per foot.
4. Handhole reinforcement ring shall be ¼" x 2" for 0.1196" to 0.2391" thick poles, ⅜" x 2" for 0.3125" thick poles.
5. Handholes shall be located on the downstream side of traffic.
6. Detail F, fatigue resistant weld, is required at socket welded signal mast arm plate and pole base plate.
7. Cap screws shall be tightened by the turn-of-nut method ⅓ turn from a snug tight condition. No washer will be required.
8. Outside diameter, wall thickness, and corresponding section properties of poles and mast arms as shown in the Standard Plans are minimums. Unless otherwise specified, alternative sections shall require approval by the Engineer.
9. Wind Loading (3 seconds gust): 100 mph
10. Unit Stresses (Structural steel):
    fy = 55,000 psi (tapered steel tube and anchor bolts)
    fy = 50,000 psi (unless otherwise noted)
11. Unit Stresses (Reinforced concrete):
    f'c = 3,625 psi
    fy = 60,000 psi

WELD SIZE	WALL THICKNESS
3/16"	0.1196"
¼"	0.1793"
5/16"	0.2391"
⅜"	0.3125"

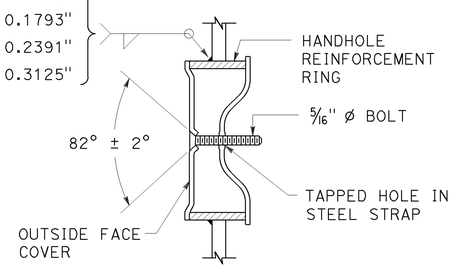

TAMPER RESISTANT HANDHOLE COVER
DETAIL B

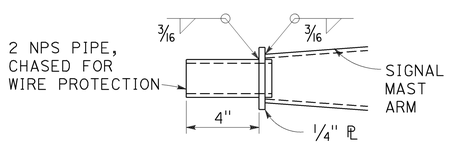

TIP TENON
DETAIL TL

This detail supersedes Detail S when so designated

WELD SIZE	WALL THICKNESS
⅛"	0.1196"
3/16"	0.1793"
¼"	0.2391"

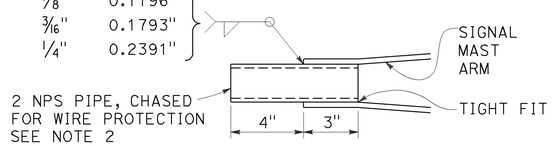

TIP TENON
DETAIL TS

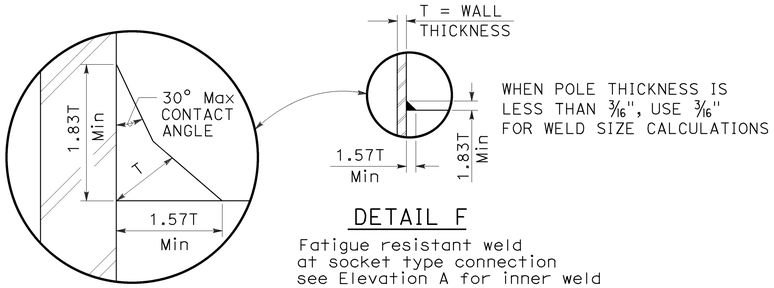

DETAIL F

Fatigue resistant weld at socket type connection see Elevation A for inner weld

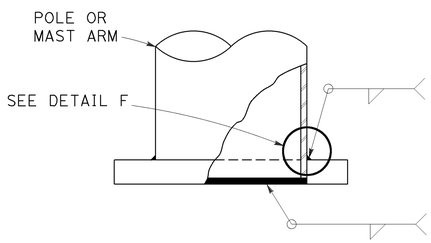

WELD SIZE	WALL THICKNESS
¼"	0.1196"
5/16"	0.1793"
⅜"	0.2391"
7/16"	0.3125"

⅛"	0.1196"
3/16"	0.1793"
¼"	0.2391"
5/16"	0.3125"

ELEVATION A

STATE OF CALIFORNIA
DEPARTMENT OF TRANSPORTATION

ELECTRICAL SYSTEMS (SIGNAL AND LIGHTING STANDARD, DETAIL No. 1)

NO SCALE

RSP ES-7M DATED OCTOBER 30, 2015 SUPERSEDES STANDARD PLAN ES-7M DATED MAY 20, 2011 - PAGE 474 OF THE STANDARD PLANS BOOK DATED 2010.

REVISED STANDARD PLAN RSP ES-7M

9-1-15

Dist	COUNTY	ROUTE	POST MILES TOTAL PROJECT	SHEET No.	TOTAL SHEETS
07	LA	138	44.9	52	57

REGISTERED CIVIL ENGINEER

October 30, 2015
PLANS APPROVAL DATE

REGISTERED PROFESSIONAL ENGINEER
Stanley P. Johnson
No. C57793
Exp. 3-31-16
CIVIL
STATE OF CALIFORNIA

THE STATE OF CALIFORNIA OR ITS OFFICERS OR AGENTS SHALL NOT BE RESPONSIBLE FOR THE ACCURACY OR COMPLETENESS OF SCANNED COPIES OF THIS PLAN SHEET.

TO ACCOMPANY PLANS DATED 3-28-16

2010 REVISED STANDARD PLAN RSP ES-7N

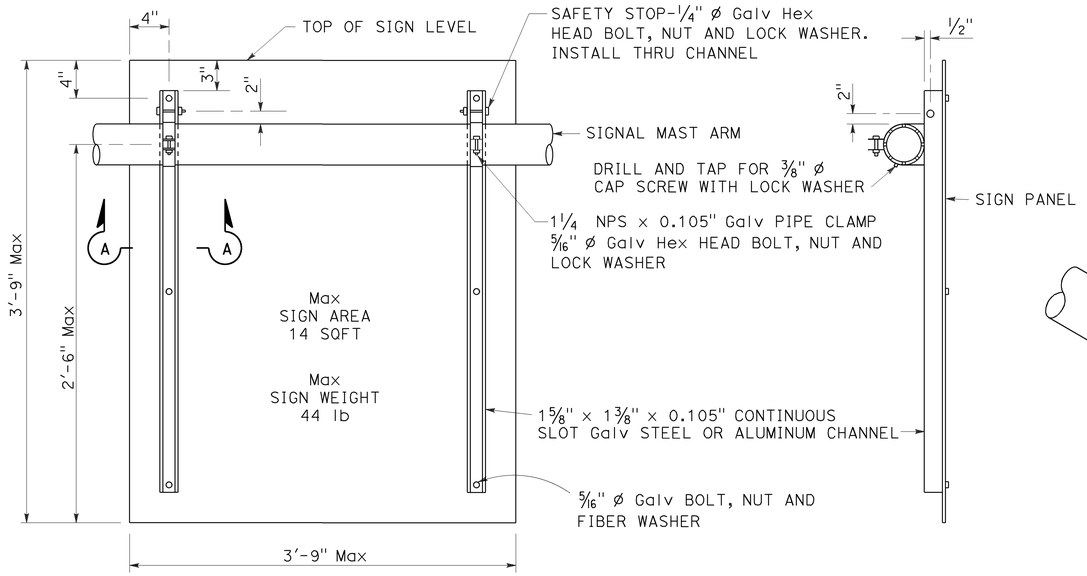

REAR VIEW

SIDE VIEW

SIGN MOUNTING DETAILS
DETAIL U

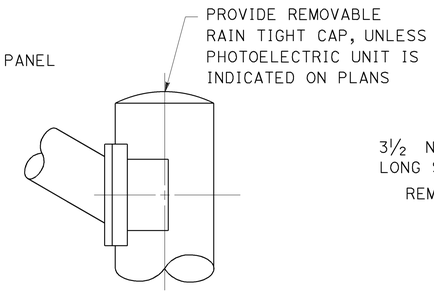

STANDARD TOP
DETAIL B-1

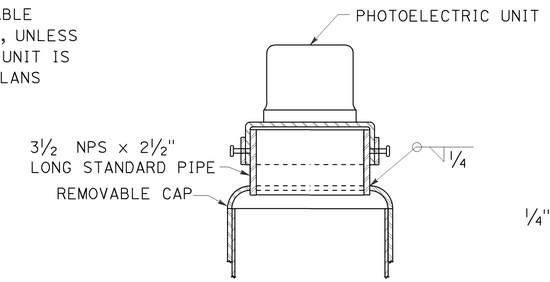

MOUNTING ADAPTER FOR
PHOTOELECTRIC UNIT
DETAIL B-2

POLE TOP DETAILS
DETAIL B

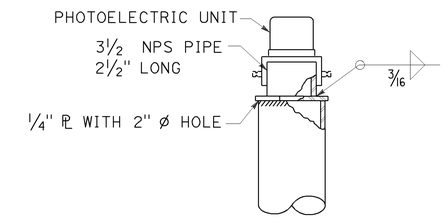

ALTERNATIVE
MOUNTING ADAPTER
DETAIL B-3

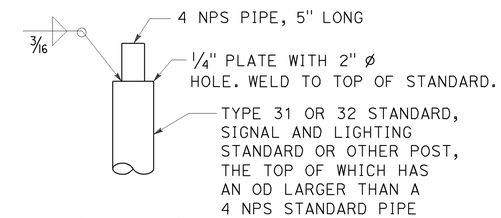

DETAIL C-1

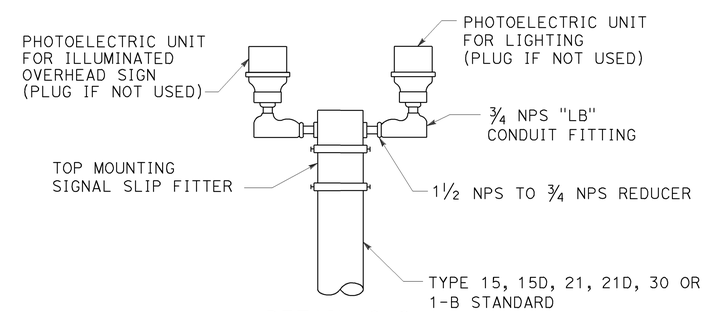

DETAIL C-2

DUAL PHOTOELECTRIC UNIT MOUNTING DETAIL
DETAIL C

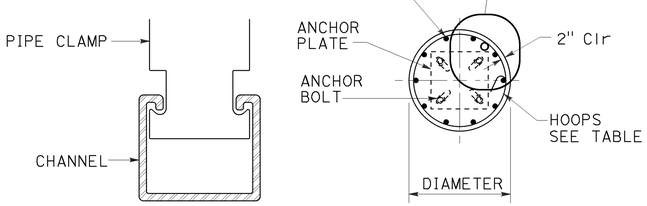

SECTION A-A

SECTION B-B

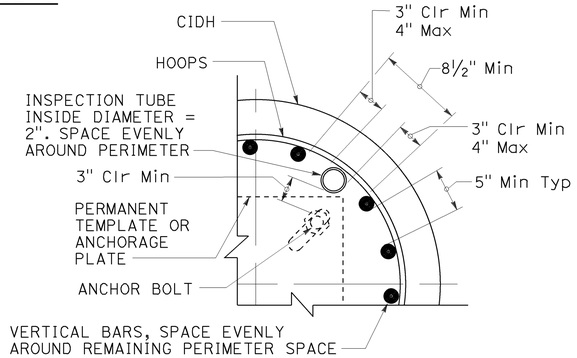

INSPECTION TUBE PLACEMENT
DETAIL I

CIDH REINFORCING AND INSPECTION TUBE SCHEDULE			
CIDH DIAMETER	VERTICAL BARS	HOOPS (WELDED)	INSPECTION TUBE
2 ft	8-#5	#4 AT 6	2
2.5 ft	10-#6		4*
3 ft	12-#7	#5 AT 6	
3.5 ft	14-#8		4
4 ft	18-#9	2-#4 AT 7	5
5 ft	22-#10	2-#5 AT 7	6
6 ft	26-#11	2-#6 AT 7	7

* FOR SLIP BASE VERSIONS WITH 3 ANCHOR BOLTS USE 3 INSPECTION TUBES.

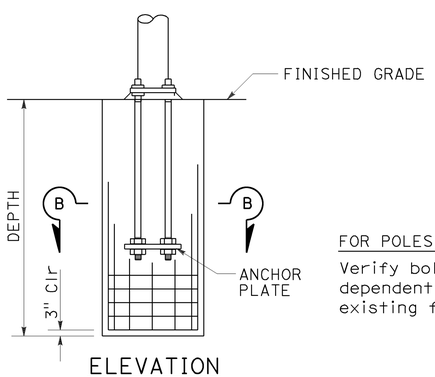

ELEVATION

CAST-IN-DRILLED-HOLE PILE FOUNDATION, REINFORCED PILE
DETAIL A

FOR POLES TO BE INSTALLED ON EXISTING FOUNDATION:

Verify bolt circles, anchor bolt sizes and dependent dimensions for poles to be installed on existing foundations before fabricating the poles.

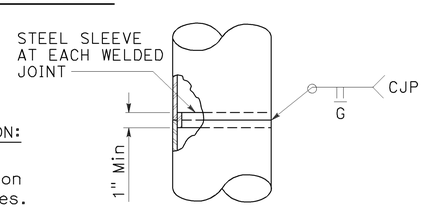

FOR UNIFORM TUBE THICKNESS
DETAIL T-1

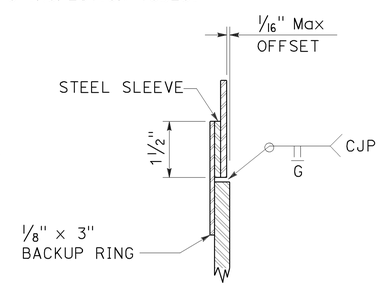

AT TUBE THICKNESS CHANGE
DETAIL T-2

POLE SPLICES
DETAIL T

STATE OF CALIFORNIA
DEPARTMENT OF TRANSPORTATION

ELECTRICAL SYSTEMS (SIGNAL AND LIGHTING STANDARD, DETAIL No. 2)

NO SCALE

RSP ES-7N DATED OCTOBER 30, 2015 SUPERSEDES STANDARD PLAN ES-7N DATED MAY 20, 2011 - PAGE 475 OF THE STANDARD PLANS BOOK DATED 2010.

REVISED STANDARD PLAN RSP ES-7N

9-1-15

Dist	COUNTY	ROUTE	POST MILES TOTAL PROJECT	SHEET No.	TOTAL SHEETS
07	LA	138	44.9	53	57

REGISTERED CIVIL ENGINEER

October 30, 2015
PLANS APPROVAL DATE

REGISTERED PROFESSIONAL ENGINEER
Stanley P. Johnson
No. C57793
Exp. 3-31-16
CIVIL
STATE OF CALIFORNIA

THE STATE OF CALIFORNIA OR ITS OFFICERS OR AGENTS SHALL NOT BE RESPONSIBLE FOR THE ACCURACY OR COMPLETENESS OF SCANNED COPIES OF THIS PLAN SHEET.

TO ACCOMPANY PLANS DATED 3-28-16

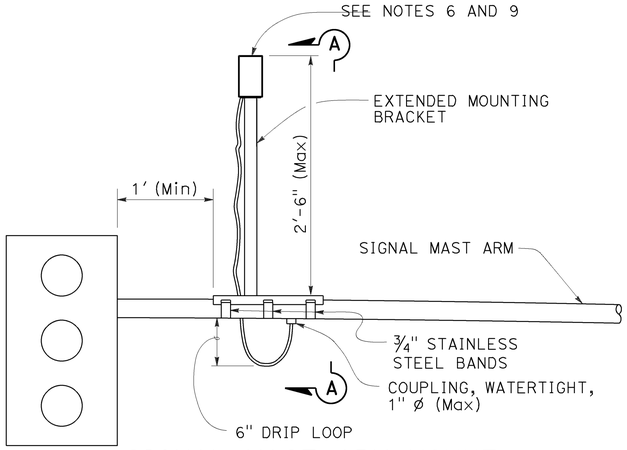

SIGNAL MAST ARM MOUNT

DETAIL A

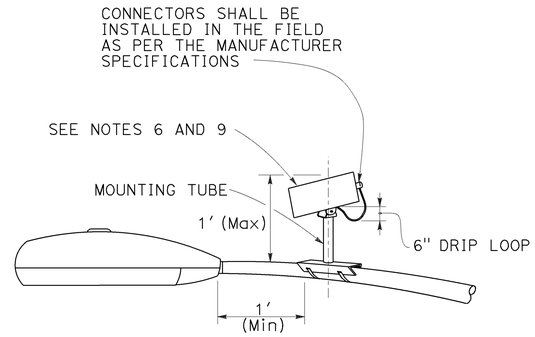

LUMINAIRE MAST ARM MOUNT

DETAIL B

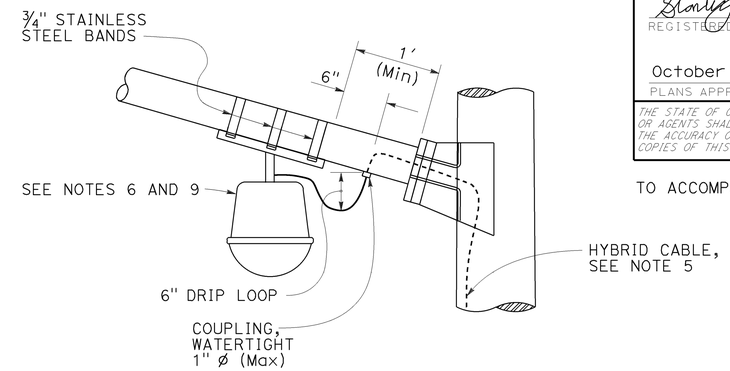

LUMINAIRE MAST ARM MOUNT

DETAIL C

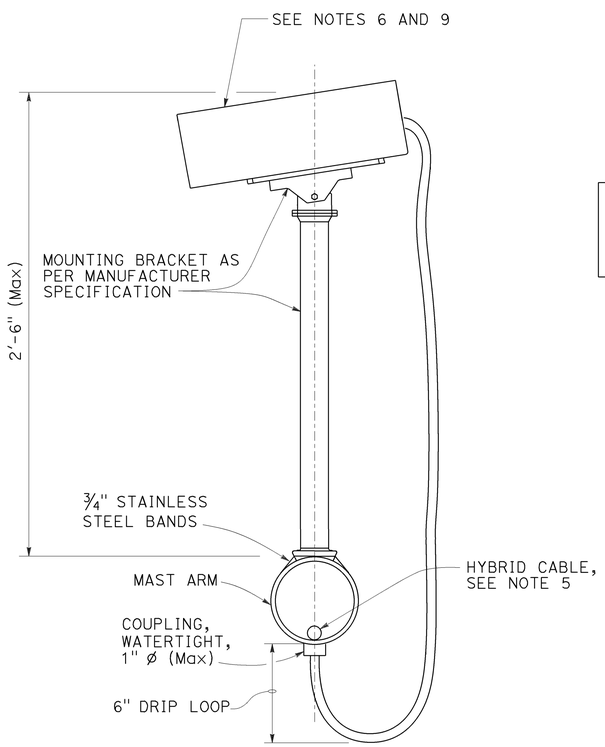

SECTION A-A

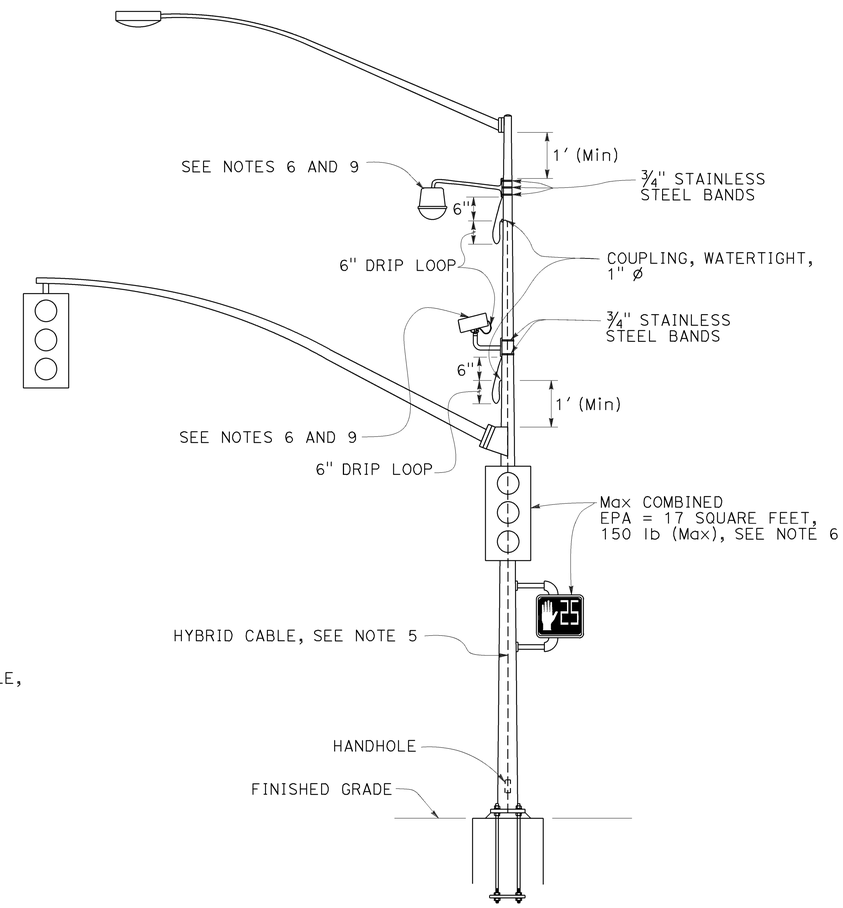

SIGNAL POLE MOUNT

DETAIL D

NOTES:

1. Exact mounting location of miscellaneous attachment and bracket shall be approved by the Engineer per manufacturer's recommendation.
2. Location of cable entrances on signal pole shall be a minimum of 1′ from any flange or base plate.
3. Hybrid cable entrances on signal pole shall be drilled for weathertight coupling as required.
4. Hybrid cable shall have a drip loop at the entrance into signal pole, luminaire mast arm and signal mast arm.
5. A single hybrid cable shall run continuous and shall not be twisted from the miscellaneous attachment to the controller cabinet. No splices shall be allowed.
6. Use the manufacturer's Effective Projected Area (EPA) for miscellaneous attachment. The maximum EPA for each miscellaneous attachment shall be 1.6 square feet with 10 lb Max.
7. Maximum of two miscellaneous attachments per traffic signal standard.
8. Maximum of one miscellaneous attachment per mast arm.
9. Miscellaneous attachment shall be mounted using clamping devices.

STATE OF CALIFORNIA
DEPARTMENT OF TRANSPORTATION

ELECTRICAL SYSTEMS (SIGNAL AND LIGHTING, MISCELLANEOUS ATTACHMENT)

NO SCALE

RSP ES-7R DATED OCTOBER 30, 2015 SUPERSEDES RSP ES-7R DATED JULY 19, 2013 AND STANDARD PLAN ES-7R DATED MAY 20, 2011 - PAGE 479 OF THE STANDARD PLANS BOOK DATED 2010.

REVISED STANDARD PLAN RSP ES-7R

2010 REVISED STANDARD PLAN RSP ES-7R

8-21-15

DIST	COUNTY	ROUTE	POST MILES TOTAL PROJECT	SHEET NO.	TOTAL SHEETS
07	LA	138	44.9	54	57

Theresa Gabriel
REGISTERED ELECTRICAL ENGINEER

October 30, 2015
PLANS APPROVAL DATE

REGISTERED PROFESSIONAL ENGINEER Theresa Aziz Gabriel No. E15129 Exp. 6-30-16 ELECTRICAL STATE OF CALIFORNIA

THE STATE OF CALIFORNIA OR ITS OFFICERS OR AGENTS SHALL NOT BE RESPONSIBLE FOR THE ACCURACY OR COMPLETENESS OF SCANNED COPIES OF THIS PLAN SHEET.

TO ACCOMPANY PLANS DATED 3-28-16

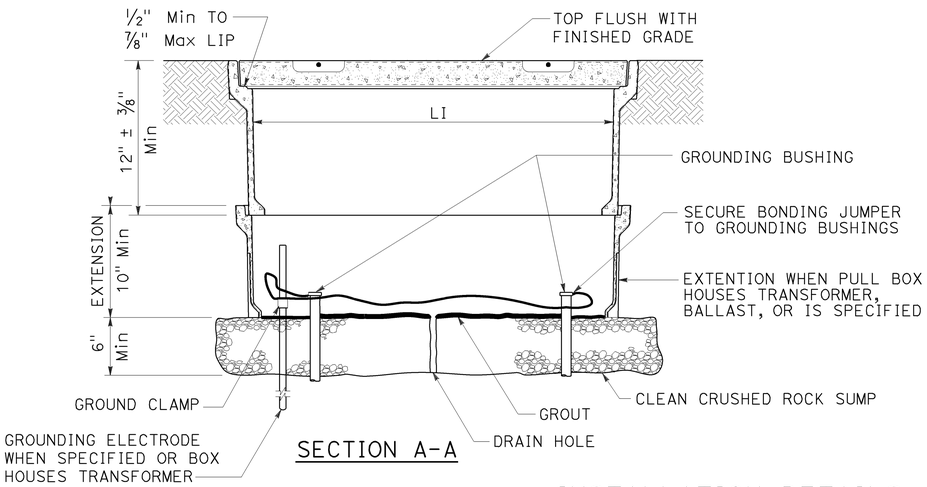

SECTION A-A

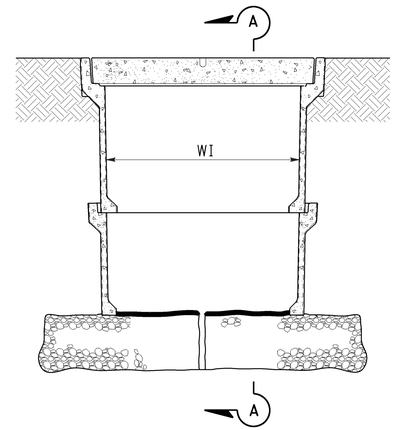

SIDE VIEW

INSTALLATION DETAILS

DETAIL A

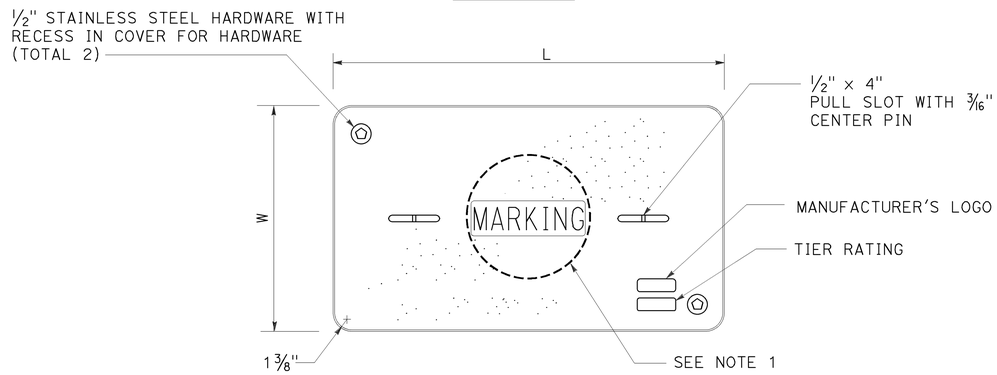

COVER TOP VIEW

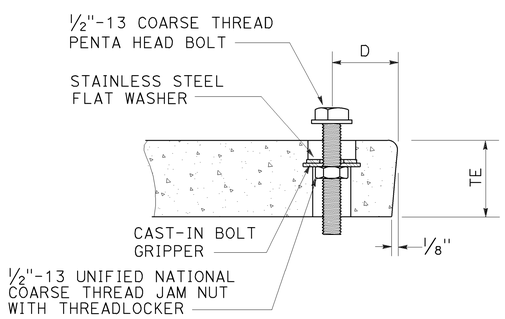

TYPICAL COVER CAPTIVE BOLT

OR SIMILAR

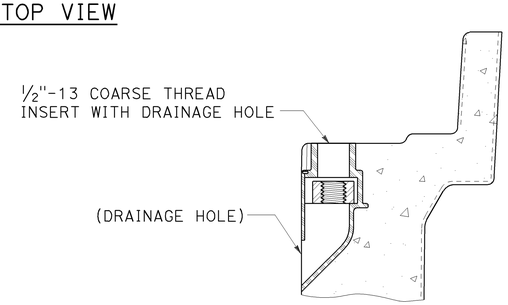

TYPICAL THREADED INSERT

OR SIMILAR

NOTES:

1. Pull box covers shall be marked as follows: "SERVICE" Service circuits between service point and service disconnect; "SPRINKLER-CONTROL" sprinkler control circuits, 50 V or less; "CALTRANS" on all pull boxes, except pull boxes marked "SPRINKLER-CONTROL"; and "TELEPHONE" Telephone service;
   - A) No. 3½ pull box.
     - 1) "SIGNAL" - Traffic signal circuits with or without lighting or sign lighting circuits.
     - 2) "LIGHTING" - Lighting or sign lighting circuits where voltage is under 600 V.
   - B) No. 5, 6, 9 or 9A pull box.
     - 1) "TRAFFIC SIGNAL" - Traffic signal circuits with or without lighting or sign lighting circuits.
     - 2) "LIGHTING" - Lighting or sign lighting circuits where voltage is under 600 V.
     - 3) "LIGHTING-HIGH VOLTAGE" - Lighting or sign lighting circuits where voltage is above 600 V.
     - 4) "IRRIGATION" - Circuits to irrigation controller 120 V or more.
     - 5) "RAMP METER" - Ramp meter circuits.
     - 6) "COUNT STATION" - Count or speed monitor circuits.
     - 7) "COMMUNICATIONS" - Communication circuits.
     - 8) "TOS COMMUNICATIONS" - TOS communication line.
     - 9) "TOS POWER" - TOS power.
     - 10) "TDC POWER" - Telephone demarcation cabinet power.
     - 11) "CCTV" - Closed circuit television circuits.
     - 12) "TMS" - Traffic monitoring station circuits.
     - 13) "CMS" - Changeable message sign circuits.
     - 14) "HAR" - Highway advisory radio circuits.
     - 15) "BOOSTER PUMP" - Booster pump circuit.
2. The nominal dimensions of the opening in which the cover sets shall be the same as the cover dimensions except the length and width dimensions shall be 1/8" greater.
3. Covers and boxes shall be interchangeable with California standard male and female gages. When interchanged with a standard male or female gage, the top surfaces shall be flush within 1/8". Top outside radius of covers and pull boxes shall have a 1/8" radius.
4. Pull box extension may be another pull box as long as the bottom edge of the pull box can fit into the cover opening.
5. Dimensions for the cover for non-traffic pull box are nominal values.

DIMENSION TABLE

PULL BOX	PULL BOX					COVER				
	MINIMUM DEPTH BOX	MINIMUM DEPTH EXTENSION	MINIMUM WEIGHT	LI Min	WI Min	TE	D	L	W	MINIMUM WEIGHT
No. 3½	12"	N/A	40 lb	1' - 3"	9"	1¾"	1¾"	1'-3¼" - 1'-3⅜"	10" - 10⅛"	30 lb
No. 5	12"	10"	55 lb	1' - 8"	11"	2"	1¾"	1'-11¼"	1'-1¾"	60 lb
No. 6	12"	10"	70 lb	2' - 4¼"	1' - 3¼"	2"	2"	2'-6½"	1'-5½"	85 lb

STATE OF CALIFORNIA
DEPARTMENT OF TRANSPORTATION

ELECTRICAL SYSTEMS (NON-TRAFFIC PULL BOX)

NO SCALE

RSP ES-8A DATED OCTOBER 30, 2015 SUPERSEDES RSP ES-8A DATED JULY 19, 2013 AND RSP ES-8A DATED JANUARY 20, 2012 THAT SUPPLEMENTS THE STANDARD PLANS BOOK DATED 2010.

REVISED STANDARD PLAN RSP ES-8A

2010 REVISED STANDARD PLAN RSP ES-8A

8-25-15

Dist	COUNTY	ROUTE	POST MILES TOTAL PROJECT	SHEET No.	TOTAL SHEETS
07	LA	138	44.9	55	57

Theresa Gabriel
REGISTERED ELECTRICAL ENGINEER

October 30, 2015
PLANS APPROVAL DATE

REGISTERED PROFESSIONAL ENGINEER
Theresa Aziz Gabriel
No. E15129
Exp. 6-30-16
ELECTRICAL
STATE OF CALIFORNIA

THE STATE OF CALIFORNIA OR ITS OFFICERS OR AGENTS SHALL NOT BE RESPONSIBLE FOR THE ACCURACY OR COMPLETENESS OF SCANNED COPIES OF THIS PLAN SHEET.

TO ACCOMPANY PLANS DATED 3-28-16

NOTE:
Curves represent the minimum footcandle (FC).

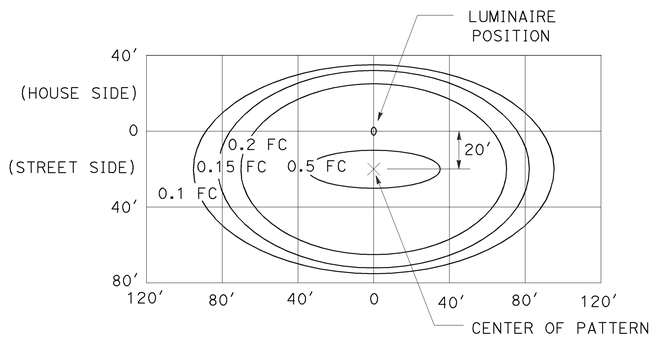

LED LUMINAIRE 165 W
34′ Mounting Height

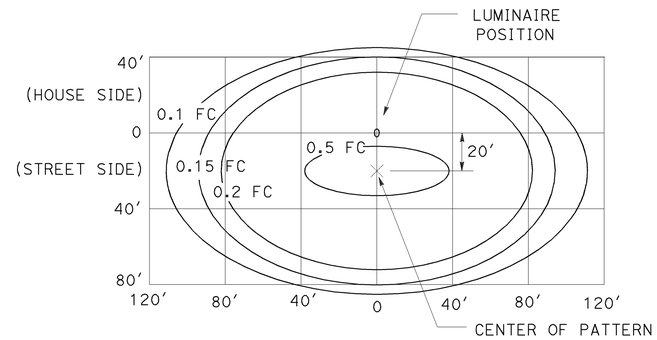

LED LUMINAIRE 235 W
40′ Mounting Height

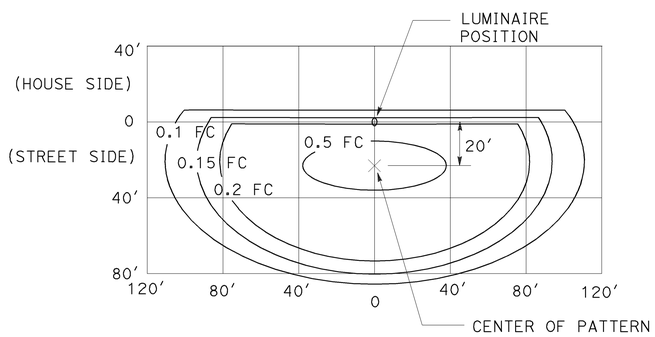

LED LUMINAIRE 235 W
40′ Mounting Height
with back side control

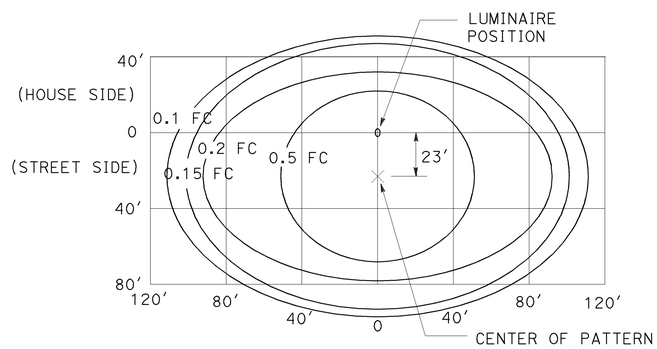

LED LUMINAIRE 300 W
40′ Mounting Height

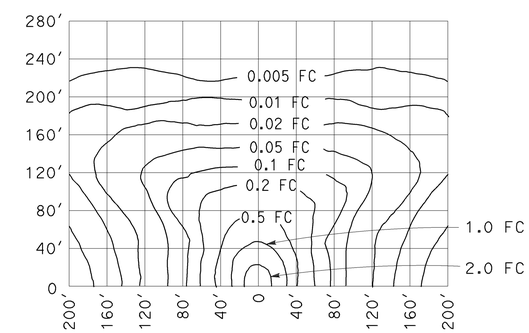

LOW-PRESSURE SODIUM LUMINAIRE 180 W
40′ Mounting Height
Lamp operated at 33,000 lm

STATE OF CALIFORNIA
DEPARTMENT OF TRANSPORTATION

ELECTRICAL SYSTEMS (ISOFOOTCANDLE CURVES)

NO SCALE

RSP ES-10A DATED OCTOBER 30, 2015 SUPERSEDES RSP ES-10A DATED JULY 19, 2013 THAT SUPPLEMENTS THE STANDARD PLANS BOOK DATED 2010.

REVISED STANDARD PLAN RSP ES-10A

2010 REVISED STANDARD PLAN RSP ES-10A

9-29-15

Dist	COUNTY	ROUTE	POST MILES TOTAL PROJECT	SHEET No.	TOTAL SHEETS
07	LA	138	44.9	56	57

REGISTERED CIVIL ENGINEER

July 19, 2013
PLANS APPROVAL DATE

REGISTERED PROFESSIONAL ENGINEER
Stanley P. Johnson
No. C57793
Exp. 3-31-14
CIVIL
STATE OF CALIFORNIA

THE STATE OF CALIFORNIA OR ITS OFFICERS OR AGENTS SHALL NOT BE RESPONSIBLE FOR THE ACCURACY OR COMPLETENESS OF SCANNED COPIES OF THIS PLAN SHEET.

TO ACCOMPANY PLANS DATED 3-28-16

STANDARD TYPE	SETBACK (DIMENSION A)
32	30'-0" (Min)
31	20'-0" (Min)
15, 15D, 15-SB, 21, 21D, 30	ARM LENGTH (Min)

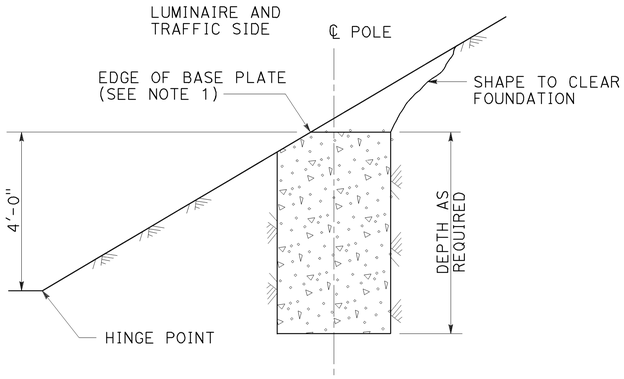

CUT SLOPES
STEEPER THAN 4:1,
LESS THAN 2:1
DETAIL A-1
See Note 2 and 3

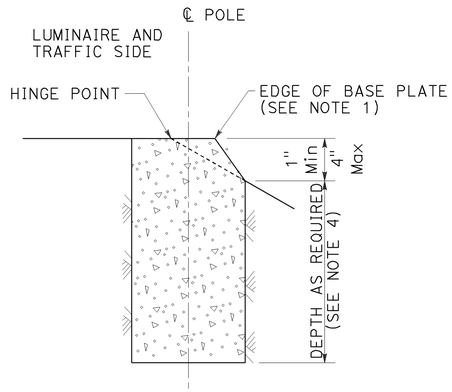

FILL SLOPES
STEEPER THAN 4:1,
LESS THAN 2:1
DETAIL A-2
See Note 2 and 3

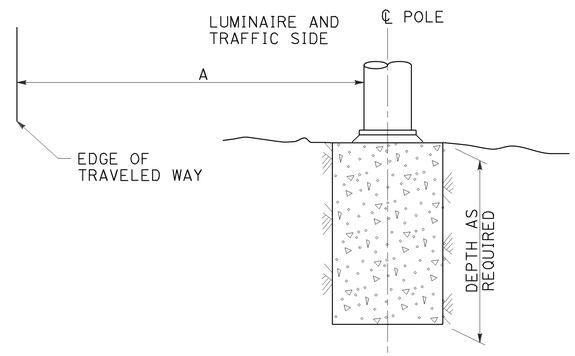

FLAT SECTIONS, CUT OR FILL SLOPES
4:1 OR FLATTER
DETAIL A-3
See Note 2

FOUNDATIONS ADJACENT TO ALL ROADWAYS EXCEPT
IN SIDEWALK, MEDIAN AND ISLAND AREAS
DETAIL A

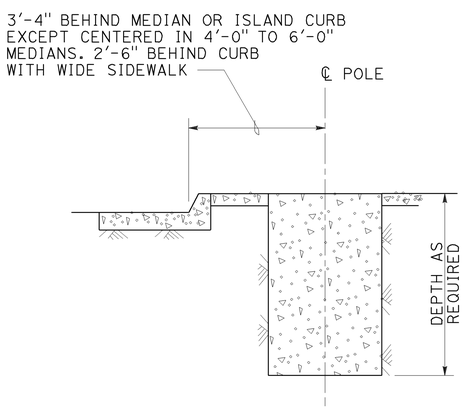

MEDIAN, ISLAND
OR WIDE SIDEWALK
DETAIL B-1
7' Wide and wider

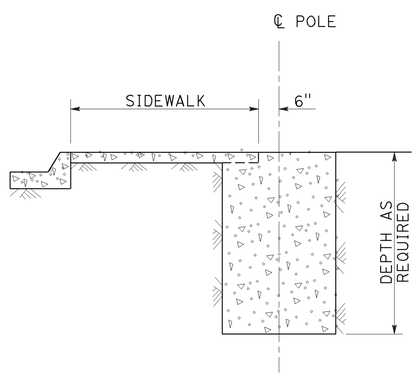

NARROW SIDEWALK
DETAIL B-2
Less than 7' wide

FOUNDATIONS IN SIDEWALK, MEDIAN AND ISLAND AREAS
DETAIL B

NOTES:

1. Where a portion of the foundation is above grade, the top edges shall have a 1" chamfer.
2. Slopes shall be horizontal to vertical ratio (Horizontal : Vertical).
3. Horizontal setbacks on cut and fill slopes steeper than 4:1 shall not exceed the distance shown for flat sections.
4. CIDH embedment depth shall be increased beyond standard depths by the diameter of the CIDH.

STATE OF CALIFORNIA
DEPARTMENT OF TRANSPORTATION

ELECTRICAL SYSTEMS (FOUNDATION INSTALLATIONS)

NO SCALE

RSP ES-11 DATED JULY 19, 2013 SUPERSEDES STANDARD PLAN ES-11
DATED MAY 20, 2011 - PAGE 488 OF THE STANDARD PLANS BOOK DATED 2010.

REVISED STANDARD PLAN RSP ES-11

2010 REVISED STANDARD PLAN RSP ES-11

7-9-13

Dist	COUNTY	ROUTE	POST MILES TOTAL PROJECT	SHEET No.	TOTAL SHEETS
07	LA	138	44.9	57	57

Theresa Gabriel
REGISTERED ELECTRICAL ENGINEER

October 30, 2015
PLANS APPROVAL DATE

REGISTERED PROFESSIONAL ENGINEER
Theresa Aziz Gabriel
No. E15129
Exp. 6-30-16
ELECTRICAL
STATE OF CALIFORNIA

THE STATE OF CALIFORNIA OR ITS OFFICERS OR AGENTS SHALL NOT BE RESPONSIBLE FOR THE ACCURACY OR COMPLETENESS OF SCANNED COPIES OF THIS PLAN SHEET.

TO ACCOMPANY PLANS DATED 3-28-16

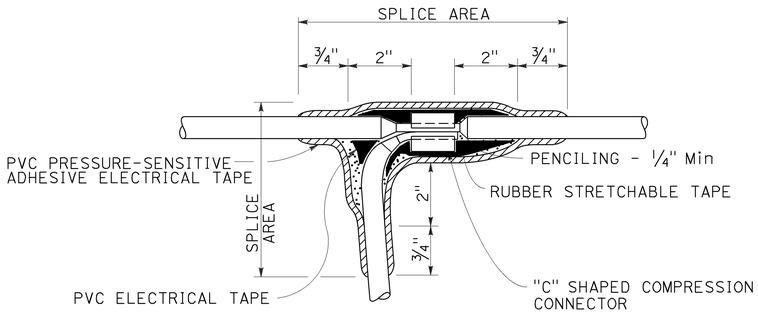

TYPE C SPLICE

See Note 3

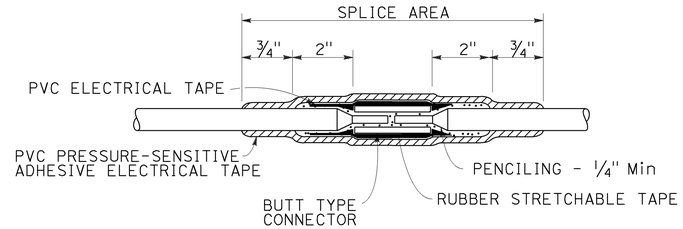

TYPE S SPLICE

See Note 4

NOTES:

1. Dimensions are minimum.
2. Rubber tapes shall be rolled after application.
3. Between 1 free-end and 1 through conductor.
4. Between 2 free-end conductors.
5. Between 3 free-end conductors.

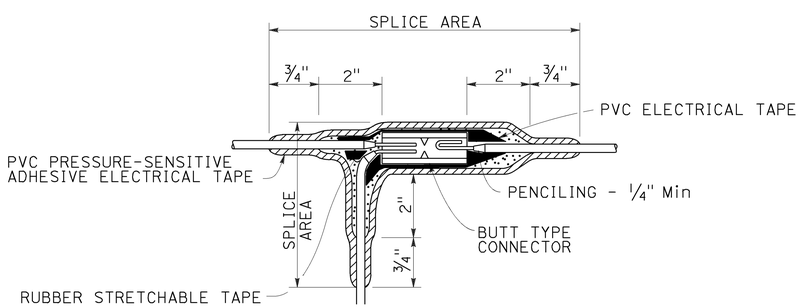

TYPE ST SPLICE

See Note 5

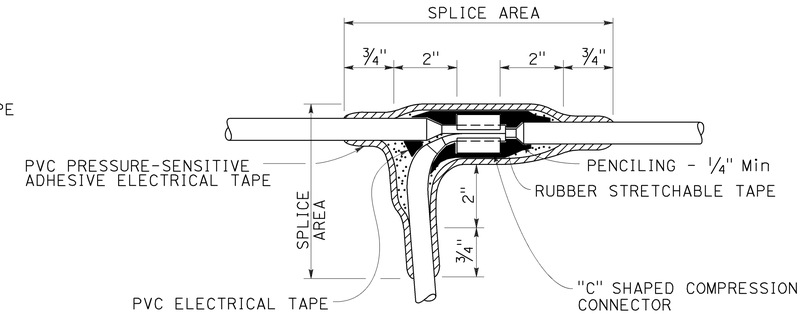

TYPE T SPLICE

See Note 5

STATE OF CALIFORNIA
DEPARTMENT OF TRANSPORTATION

ELECTRICAL SYSTEMS (SPLICING DETAILS)

NO SCALE

RSP ES-13A DATED OCTOBER 30, 2015 SUPERSEDES STANDARD PLAN ES-13A DATED MAY 20, 2011 - PAGE 491 OF THE STANDARD PLANS BOOK DATED 2010.

REVISED STANDARD PLAN RSP ES-13A

2010 REVISED STANDARD PLAN RSP ES-13A

9-28-15