FOR CONTRACT NO.: 10-0G8204

INFORMATION HANDOUT

MATERIALS INFORMATION

ALTERNATIVE IN-LINE TERMINAL SYSTEM

ALTERNATIVE FLARED TERMINAL SYSTEM

TEMPORARY ALTERNATIVE CRASH CUSHION

ALTERNATIVE CRASH CUSHION

WATER SOURCE

ROUTE: 10-SJ-132, PM L0.0/7.1

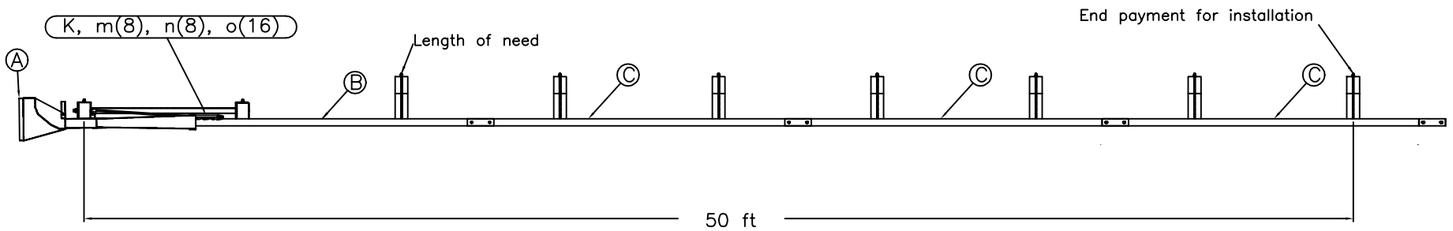

PLAN

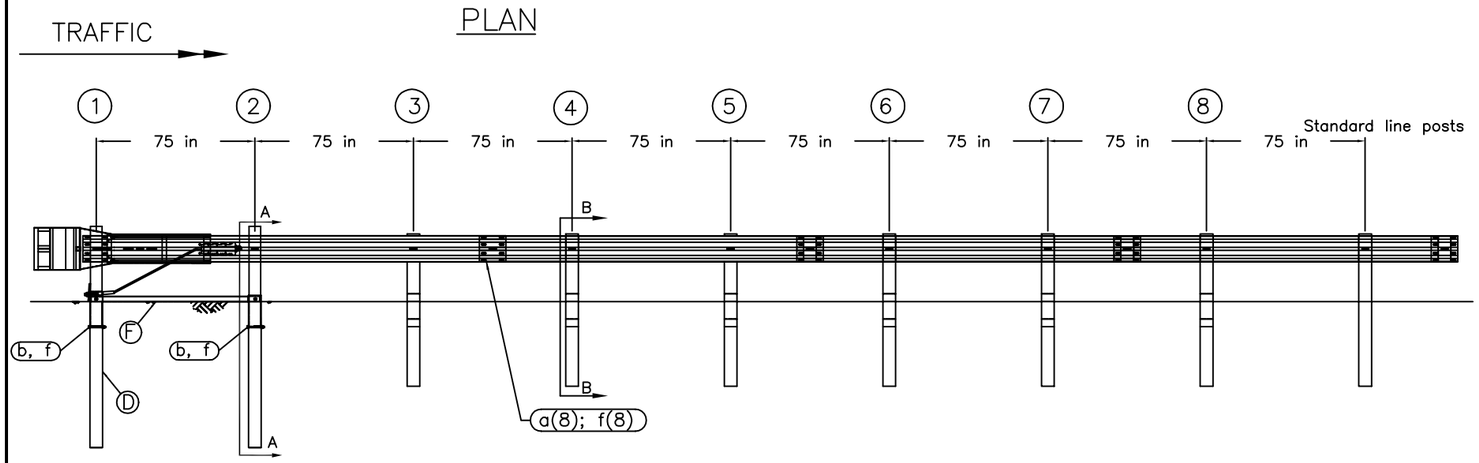

ELEVATION

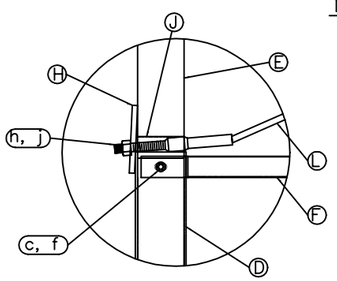

POST #1 CONNECTION DETAIL

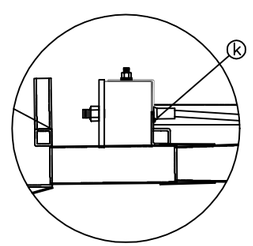

IMPACT HEAD CONNECTION DETAIL

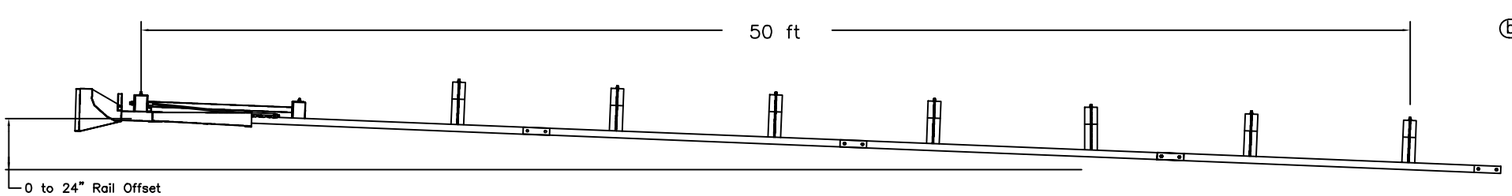

OPTIONAL FLARED INSTALLATION

25:1 maximum flare rate

GENERAL NOTES:

1. Breakaway posts are required with the SKT.
2. All bolts, nuts, cable assemblies, cable anchors and bearing plates shall be galvanized.
3. The SKT can be flared at a rate of up to 25:1 to prevent the impact head from encroaching on the shoulder.
4. The foundation tubes shall not protrude more than 4" above the ground (measured along a 5' cord). Site grading may be necessary to meet this requirement.
5. When rock is encountered, a 12" Ø post hole, 20" into the rock surface may be used if approved by the engineer. Granular material will be placed in the bottom of the hole, approximately 2.5" deep to provide drainage. The first two posts can be field cut to length, placed in the hole and backfilled with adequately compacted material excavated from the hole.
6. The breakaway cable assembly must be taut. A locking device (vice grips or channel lock pliers) should be used to prevent the cable from twisting when tightening nuts.
7. A site evalution should be considered if there is less than 25' between the outlet side of the terminal and any adjacent driving lane.
8. The soil tubes may be driven with an approved driving head. They shall not be driven with the post in the tube.
9. The wood blockouts should be "toe-nailed" to the rectangular wood posts to prevent them from turning when the wood shrinks.

ITEM	QTY	BILL OF MATERIALS	ITEM NO.
A	1	IMPACT HEAD	S3000
B	1	W-BEAM GUARDRAIL END SECTION, 12 Ga.	S1303 MGS
C	3	W-BEAM GUARDRAIL, 12 Ga.	G1203 MGS
D	2	FOUNDATION TUBE	E731
E	2	BCT WOOD POST	P650 MGS
F	1	GROUND STRUT	E780
G	6	CRT WOOD POST	P671 MGS
H	1	BEARING PLATE	E750
J	1	PIPE SLEEVE	E740
K	1	CABLE ANCHOR BOX	S760
L	1	BCT CABLE ANCHOR ASSEMBLY	E770
M	6	MGS TIMBER BLOCKOUT OR EQUIV.	P618
		HARDWARE (ALL DIMENSIONS IN INCHES)	
a	24	5/8ø x 1 1/4 SPLICE BOLT	B580122
b	2	5/8ø x 7 1/2 HEX BOLT	B580754
c	2	5/8ø x 10 HEX BOLT	B581004
d	1	5/8ø x 10 H.G.R. BOLT	B581002
e	6	5/8ø x 22 H.G.R. BOLT	B582202
f	35	5/8ø H.G.R. NUT	N050
g	7	H.G.R. WASHER	W050
h	2	1 ANCHOR CABLE HEX NUT	N100
j	2	1 ANCHOR CABLE WASHER	W100
k	2	3/8 x 3 LAG SCREW	E350
m	8	CABLE ANCHOR BOX SHOULDER BOLT	SB58A
n	8	1/2 A325 STRUCTURAL NUT	N055A
o	16	1 1/16 OD x 9/16 ID A325 STR. WASHER	W050A

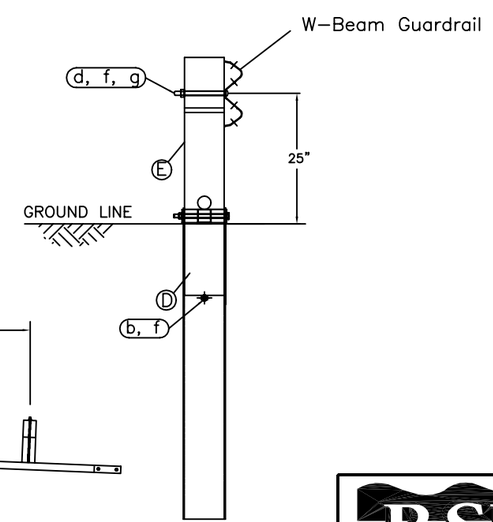

SECTION A-A

Post #2

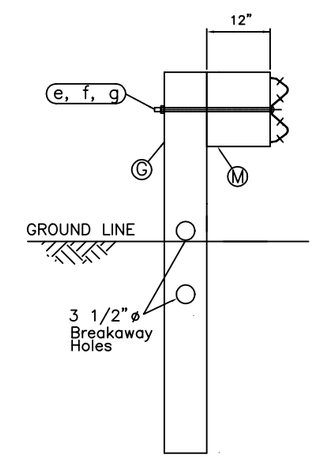

SECTION B-B

Posts 3 thru 8

RSI
Road Systems, Inc.
Big Spring, TX
Phone: 432-263-2435
or Phone: 330-346-0721

Sequential Kinking Terminal
SKT - Assembly

Midwest Guardrail System
Wood Post System

Sheet: A1
Date: 12/01/04
By: JRR
Drawing Name: SKT-MGS-W-US
Scale: NONE
Rev: 0

Appendix A - System Configuration, 37' 6" MGS

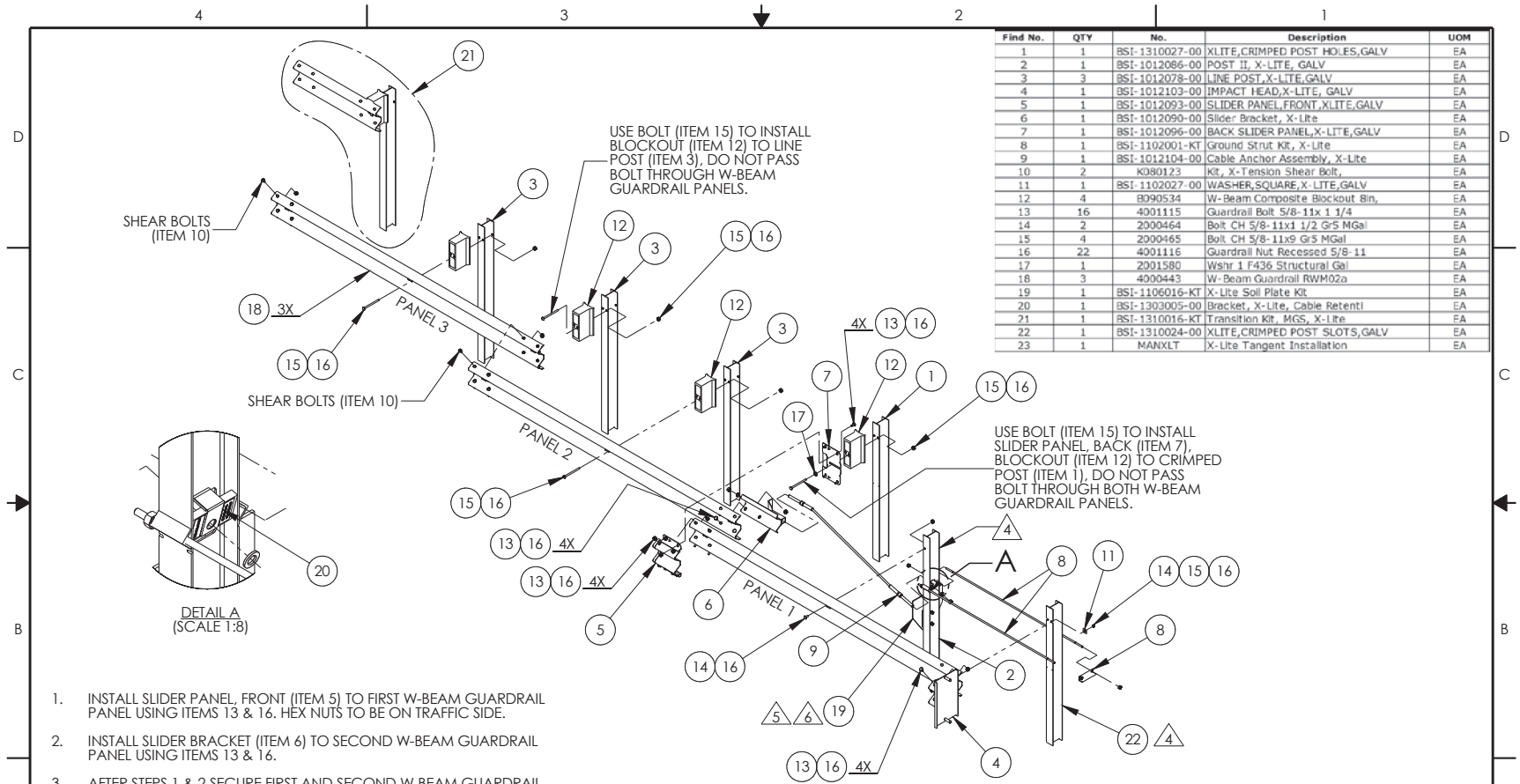

Find No.	QTY	No.	Description	UOM
1	1	BSI-1310027-00	XLITE,CRIMPED POST HOLES,GALV	EA
2	1	BSI-1012086-00	POST II, X-LITE, GALV	EA
3	3	BSI-1012078-00	LINE POST,X-LITE,GALV	EA
4	1	BSI-1012103-00	IMPACT HEAD,X-LITE, GALV	EA
5	1	BSI-1012093-00	SLIDER PANEL,FRONT,XLITE,GALV	EA
6	1	BSI-1012090-00	Slider Bracket, X-Lite	EA
7	1	BSI-1012096-00	BACK SLIDER PANEL,X-LITE,GALV	EA
8	1	BSI-1102001-KT	Ground Strut Kit, X-Lite	EA
9	1	BSI-1012104-00	Cable Anchor Assembly, X-Lite	EA
10	2	K080123	Kit, X-Tension Shear Bolt,	EA
11	1	BSI-1102027-00	WASHER,SQUARE,X-LITE,GALV	EA
12	4	B090534	W-Beam Composite Blockout 8in,	EA
13	16	4001115	Guardrail Bolt 5/8-11x 1 1/4	EA
14	2	2000464	Bolt CH 5/8-11x1 1/2 Gr5 MGal	EA
15	4	2000465	Bolt CH 5/8-11x9 Gr5 MGal	EA
16	22	4001116	Guardrail Nut Recessed 5/8-11	EA
17	1	2001580	Wshr 1 F436 Structural Gal	EA
18	3	4000443	W-Beam Guardrail RWM02a	EA
19	1	BSI-1106016-KT	X-Lite Soil Plate Kit	EA
20	1	BSI-1303005-00	Bracket, X-Lite, Cable Retentl	EA
21	1	BSI-1310016-KT	Transition Kit, MGS, X-Lite	EA
22	1	BSI-1310024-00	XLITE,CRIMPED POST SLOTS,GALV	EA
23	1	MANXLT	X-Lite Tangent Installation	EA

1. INSTALL SLIDER PANEL, FRONT (ITEM 5) TO FIRST W-BEAM GUARDRAIL PANEL USING ITEMS 13 & 16. HEX NUTS TO BE ON TRAFFIC SIDE.
2. INSTALL SLIDER BRACKET (ITEM 6) TO SECOND W-BEAM GUARDRAIL PANEL USING ITEMS 13 & 16.
3. AFTER STEPS 1 & 2 SECURE FIRST AND SECOND W-BEAM GUARDRAIL PANEL USING ITEMS 7, 13 & 16. HEX NUTS TO BE ON TRAFFIC SIDE.
4. SLOT ON POSTS 1 AND 2 TO FACE GUARDRAIL PANEL.
5. IF ROCK OR STIFF SOIL IS ENCOUNTERED, THE POST AND SOIL PLATE MAY BE INSTALLED BY AUGERING AND BACKFILLING THE HOLE. EXTRA CARE MUST BE TAKEN TO PREVENT SETTLEMENT OR LATERAL DISPLACEMENT OF THE POST. BACKFILL MATERIAL SHALL BE COMPACTED TO OPTIMUM COMPACTION.
6. IF ROCK IS ENCOUNTERED, THE SOIL PLATE MAY BE MODIFIED IF APPROVED BY THE PROJECT ENGINEER.

© 2010 BARRIER SYSTEMS INC. THE INFORMATION CONTAINED IN THIS DRAWING IS THE SOLE PROPERTY OF BARRIER SYSTEMS INC. ANY REPRODUCTION IN PART OR WHOLE WITHOUT THE WRITTEN PERMISSION OF BARRIER SYSTEMS INC. IS PROHIBITED.

APPROVALS

DRAWN BY:	JMT
DRAWN DATE:	10/09/2013
APPR'D BY:	GAD
APPR'D DATE:	10/09/13

UNLESS OTHERWISE SPECIFIED DIMENSIONS ARE IN INCHES. TOLERANCES ARE:
FRACTIONS ±1/16 DECIMAL .XX = ±.03 .XXX = ±.010 ANGLES ±1/2°
INTERPRET DIMENSIONS AND TOLERANCES PER ASME Y14.5-1994

THIRD ANGLE PROJECTION

DO NOT SCALE DRAWING

REV	ECN#	DATE
B	2220	01/23/14
A	2165	11/13/13
0	2151	10/09/13

BARRIER SYSTEMS
A LINDSAY TRANSPORTATION SOLUTIONS COMPANY
3333 Vaca Valley Parkway Ste 800
Vacaville, CA 95688
Tel: 888-800-3691
www.barriersystemsinc.com

TITLE
X-LITE SYSTEM ASSEMBLY, TANGENT, TRANSITION TO MGS

SIZE B | DWG NO. XLTSUS-MGS | REV. B
SCALE 1:40 | SHEET 1 OF 2

Doc. B100108

Appendix A - System Configuration, 37' 6" MGS

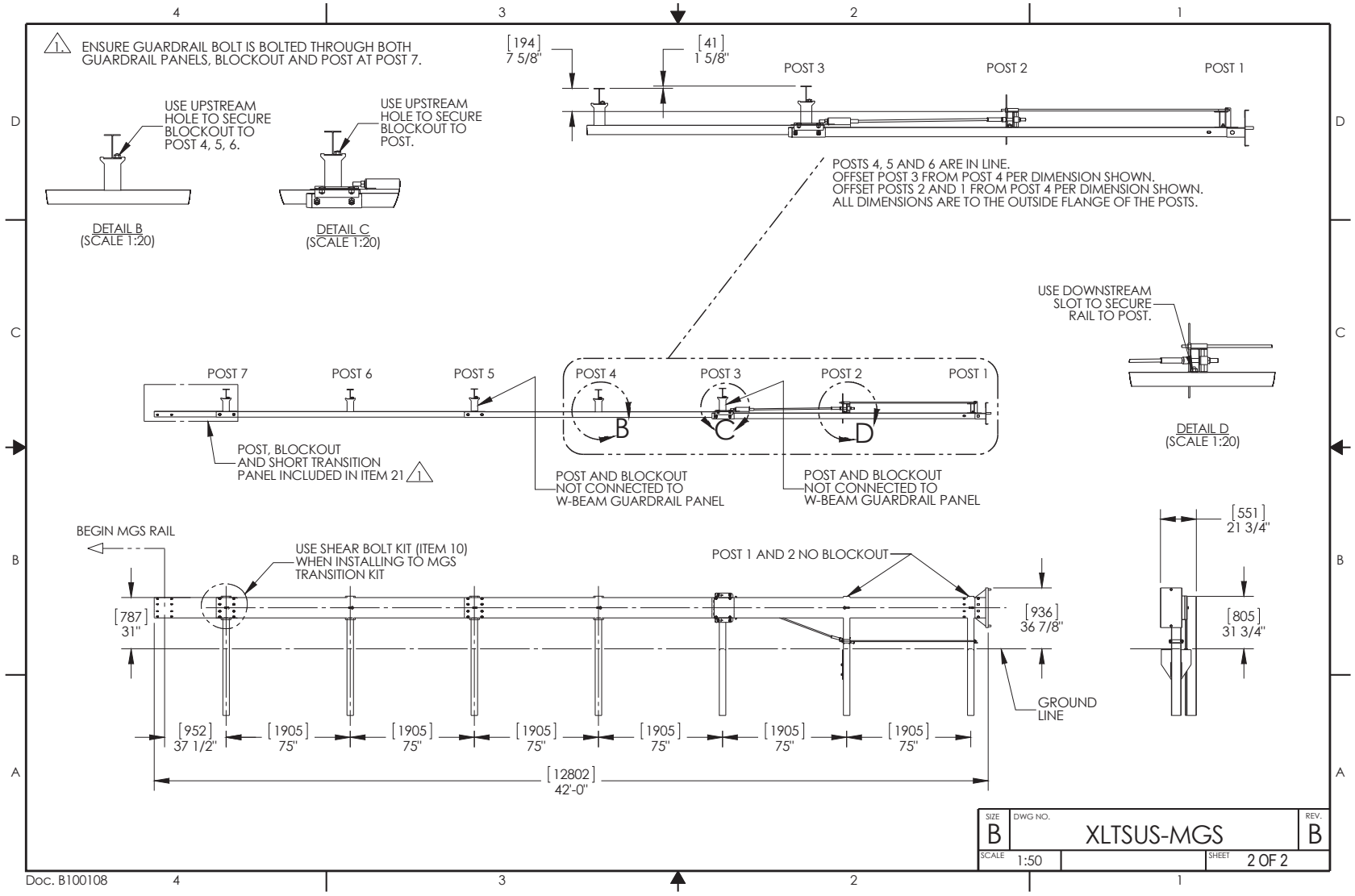

Appendix A -Bill of Materials - X-Lite Tangent, MGS 37’ 6”

Item	Description	Full System	Kit Only
BSI-1310024-00	XLITE,CRIMPED POST SLOTS,GALV	1.00	1.00
BSI-1310027-00	XLITE,CRIMPED POST HOLES,GALV	1.00	1.00
BSI-1012086-00	POST II, X-LITE, GALV	1.00	1.00
BSI-1012078-00	LINE POST,X-LITE,GALV	3.00	-
BSI-1012103-00	IMPACT HEAD,X-LITE, GALV	1.00	1.00
BSI-1012093-00	SLIDER PANEL,FRONT,XLITE,GALV	1.00	1.00
BSI-1012090-00	Slider Bracket, X-Lite	1.00	1.00
BSI-1012096-00	BACK SLIDER PANEL,X-LITE,GALV	1.00	1.00
BSI-1012097-00	Ground Strut, X-Lite	2.00	2.00
BSI-1012098-00	Ground Strut Angle	1.00	1.00
BSI-1012104-00	Cable Anchor Assembly, X-Lite	1.00	1.00
K080123	Kit, X-Tension Shear Bolt,	2.00	2.00
BSI-1102027-00	WASHER,SQUARE,X-LITE,GALV	1.00	1.00
B090534	W-Beam Composite Blockout 8in,	4.00	-
4001115	Guardrail Bolt 5/8-11x 1 1/4	16.00	-
2000464	Bolt CH 5/8-11x1 1/2 Gr5 MGal	2.00	-
2000465	Bolt CH 5/8-11x9 Gr5 MGal	4.00	-
4001116	Guardrail Nut Recessed 5/8-11	26.00	-
2001580	Wshr 1" F436 Structural	1.00	-
4000443	W-Beam Guardrail RWM02a	3.00	-
BSI-1312100-00	Soil Plate	1.00	1.00
2000220	C-Scr HH 5/8-11x3 1/2 Gr5 MGal	2.00	2.00
2001636	Wshr 5/8 F436 Struct MGal	4.00	4.00
2000312	Nut HX 5/8-11 Gr5 Mgal	2.00	1.00
BSI-1303005-00	Bracket, X-Lite, Cable Retenti	1.00	1.00
BSI-1310016-KT	Transition Kit, MGS, X-Lite	1.00	1.00

ITEM NO.	PART NUMBER	DESCRIPTION	QTY	UOM
1	BSI-1301252-KT	X-Tension Terminal Comp, 31 in	1	EACH
2	K070202	X-Tension Hardware Kit, GT,	1	EACH
3	K070206	X-Tension System Hardware Kit,	1	EACH
4	K070210	X-Tension GT Guardrail	1	EACH
5	B061100	BSI, I-Beam Post, Middle, X350	1	EACH
6	MANXT1	X-TENSION Installation Manual	1	EACH

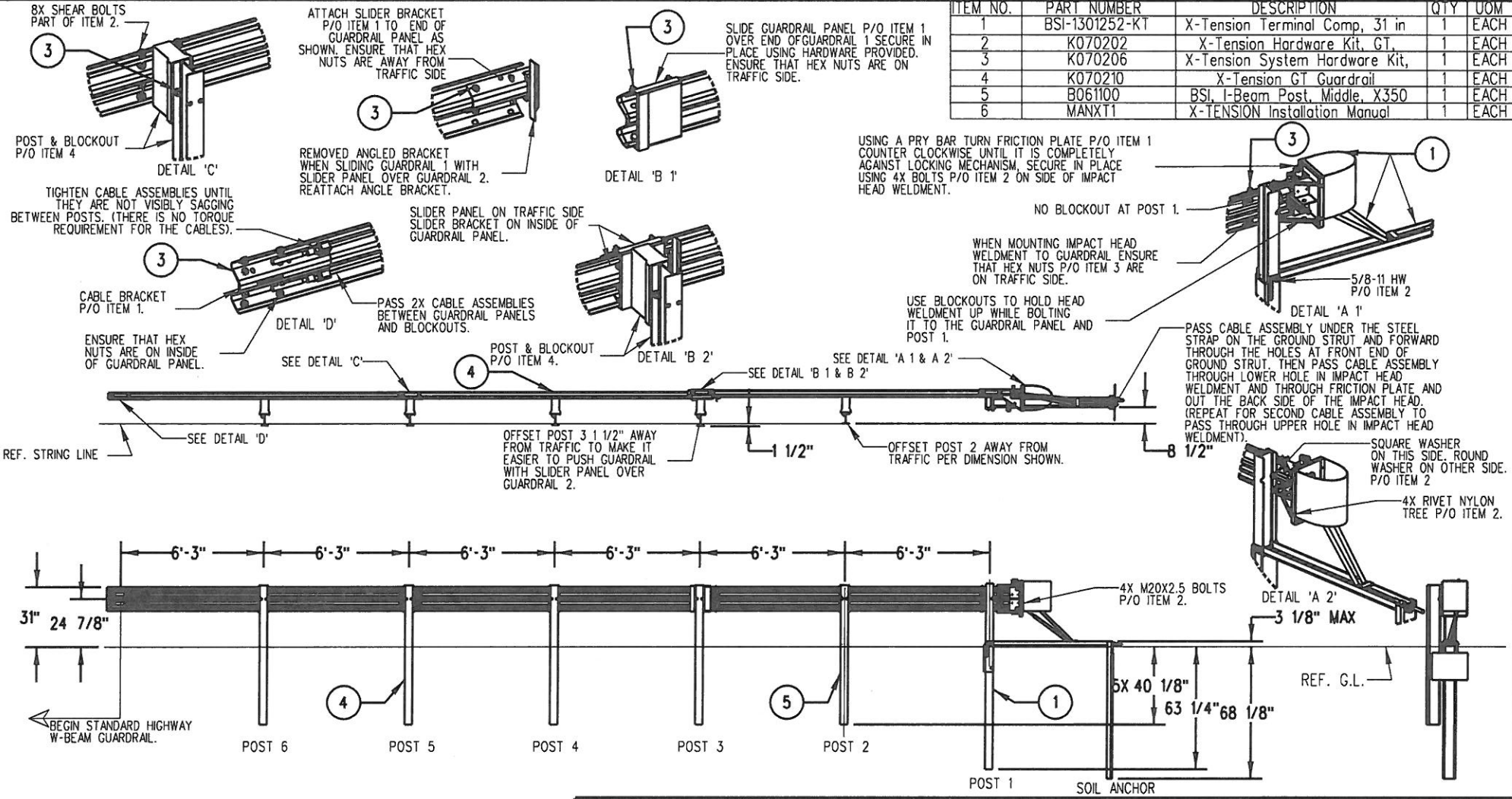

NOTES: UNLESS OTHERWISE SPECIFIED.

1. SYSTEM TO BE INSTALLED PER MANUFACTURER SPECIFICATIONS.
2. ONLY TIGHTEN THE CABLE ASSEMBLIES USING THE NUTS AT THE CABLE BRACKET (SEE DETAIL 'D'). DO NOT TIGHTEN THE CABLES AT THE FRONT OF THE GROUND ANCHOR.
3. WHEN DRIVING STEEL POST, ENSURE THAT A DRIVING CAP WITH TIMBER OR PLASTIC INSERT IS USED TO PREVENT DAMAGE TO THE GALVANIZING TO THE TOP OF THE POST.

© 2012 BARRIER SYSTEMS INC. THE INFORMATION CONTAINED IN THIS DRAWING IS THE SOLE PROPERTY OF BARRIER SYSTEMS INC. ANY REPRODUCTION IN PART OR WHOLE WITHOUT THE WRITTEN PERMISSION OF BARRIER SYSTEMS INC. IS PROHIBITED.

APPROVALS

DRAWN BY:	NMV
DRAWN DATE:	2/08/13
APPR'D BY:	JMT
APPR'D DATE:	2/08/13

UNLESS OTHERWISE SPECIFIED DIMENSIONS ARE IN INCHES. TOLERANCES ARE:
FRACTIONS ±1/16 DECIMAL .XX - ±.03 .XXX - ±.010 ANGLES ±1/2°
INTERPRET DIMENSIONS AND TOLERANCES PER ASME Y14.5-1994
THIRD ANGLE PROJECTION
DO NOT SCALE DRAWING

REV	ECN#	DATE
B	2067	03/02/15
A	2022	2/08/13

LINDSAY TRANSPORTATION SOLUTIONS™

BARRIER SYSTEMS INC.
3333 Vaca Valley Parkway Ste 800
Vacaville, CA 95688
Tel: 888-800-3691
www.barriersystemsinc.com

TITLE
X-TENSION GUARDRAIL TERMINAL SYSTEM STEEL POST WITH COMPOSITE BLOCKOUT 31" RAIL HEIGHT

SIZE	DWG NO.	REV.
B	XTGTSS5	B

SCALE 1:50 SHEET 1 OF 1

Appendix A - System Configuration, 37' 6" MGS

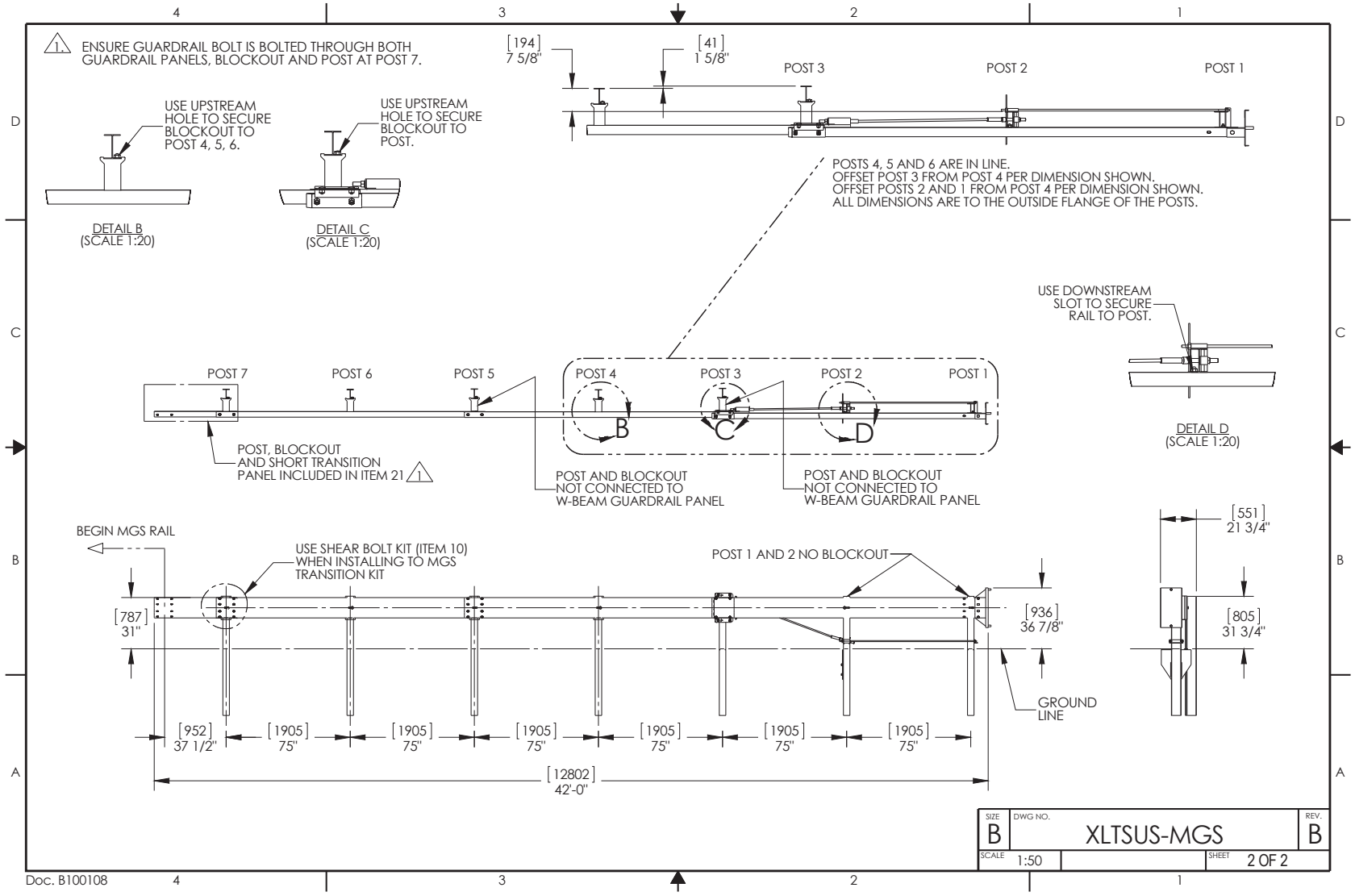

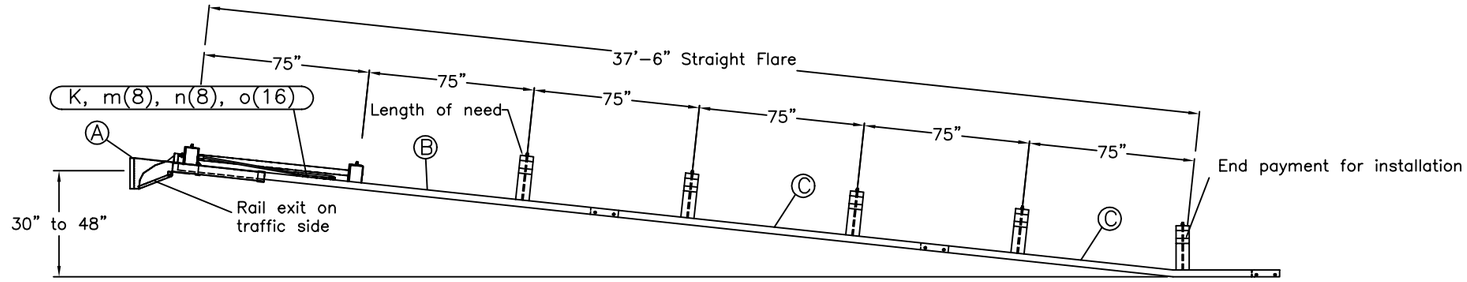

TRAFFIC

PLAN

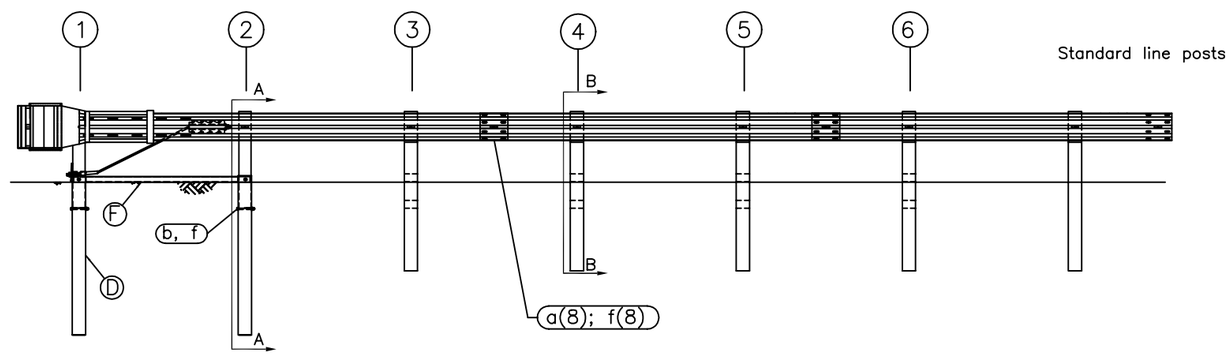

ELEVATION

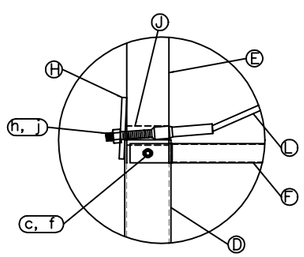

POST #1 CONNECTION DETAILS

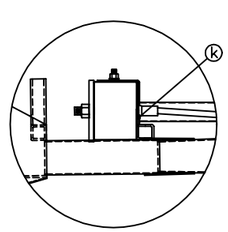

IMPACT HEAD CONNECTION DETAIL

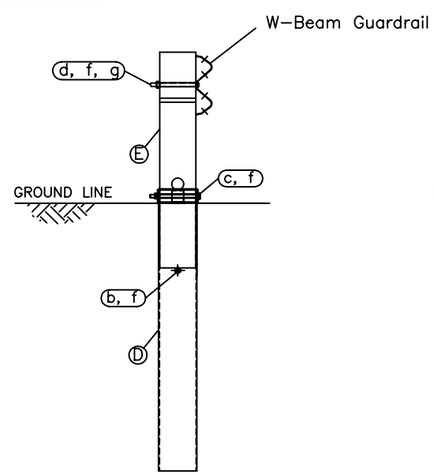

SECTION A-A
Post #2

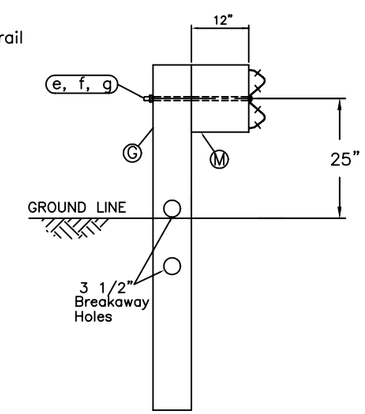

SECTION B-B
Posts 3 thru 6

ITEM	QTY	BILL OF MATERIALS	ITEM NO.
A	1	IMPACT HEAD	F3000
B	1	W-BEAM GUARDRAIL END SECTION, 12 Ga.	F1303 MGS
C	2	W-BEAM GUARDRAIL, 12 Ga.	G1203 MGS
D	2	FOUNDATION TUBE	E731
E	2	BCT WOOD POST	P650 MGS
F	1	GROUND STRUT	E780
G	4	CRT WOOD POST	P671 MGS
H	1	BEARING PLATE	E750
J	1	PIPE SLEEVE	E740
K	1	CABLE ANCHOR BOX	S760
L	1	BCT CABLE ANCHOR ASSEMBLY	E770
M	4	MGS TIMBER BLOCKOUT OR RECYC. EQUIV.	P618
		HARDWARE (ALL DIMENSIONS IN INCHES)	
a	16	5/8ø x 1 1/4 SPLICE BOLT	B580122
b	2	5/8ø x 7 1/2 HEX BOLT	B580754
c	2	5/8ø x 10 HEX BOLT	B581004
d	1	5/8ø x 10 H.G.R. BOLT	B581002
e	4	5/8ø x 22 H.G.R. BOLT	B582202
f	25	5/8ø H.G.R. NUT	N050
g	5	H.G.R. WASHER	W050
h	2	1 ANCHOR CABLE HEX NUT	N100
j	2	1 ANCHOR CABLE WASHER	W100
k	2	3/8 x 3 LAG SCREW	E350
m	8	CABLE ANCHOR BOX SHOULDER BOLT	SB58A
n	8	1/2 A325 STRUCTURAL NUT	N055A
o	16	1 1/16 OD x 9/16 ID A325 STR. WASHER	W050A

GENERAL NOTES:
1. Breakaway posts are required with the FLEAT.
2. All bolts, nuts, cable assemblies, cable anchors and bearing plates shall be galvanized.
3. The foundation tubes shall not protrude more than 4 in above the ground (measured along a 5' cord). Site grading may be necessary to meet this requirement.
4. When rock is encountered, a 12" Ø post hole, 20 in into the rock surface may be used if approved by the engineer. Granular material will be placed in the bottom of the hole, approximately 2.5" deep to provide drainage. The first two posts can be field cut to length, placed in the hole and backfilled with adequately compacted material excavated from the hole.
5. The breakaway cable assembly must be taut. A locking device (vice grips or channel lock pliers) should be used to prevent the cable from twisting when tightening nuts.
6. The soil tubes may be driven with an approved driving head. They shall not be driven with the post in the tube.
7. The wood blockouts should be "toe-nailed" to the rectangular wood posts to prevent them from turning when the wood shrinks.

RSI
Road Systems, Inc.
Big Spring, TX
Phone: 432-263-2435
or Phone: 330-346-0721

Flared Energy Absorbing Terminal - FLEAT Assembly
Midwest Guardrail System

Wood Post System

Sheet: A1
Date: 12/01/2004
By: JRR
Drawing Name: FLT-MGS-W-US
Scale: None
Rev: 0

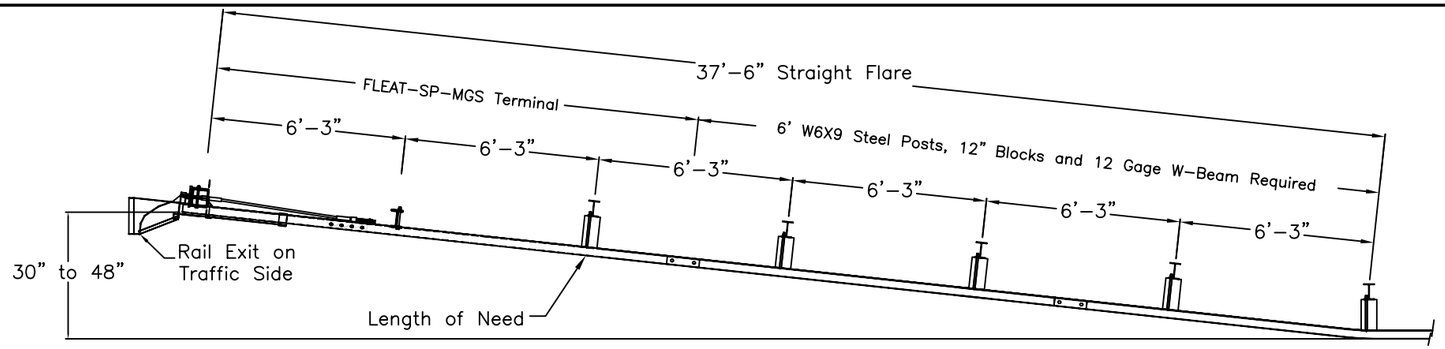

PLAN

TRAFFIC

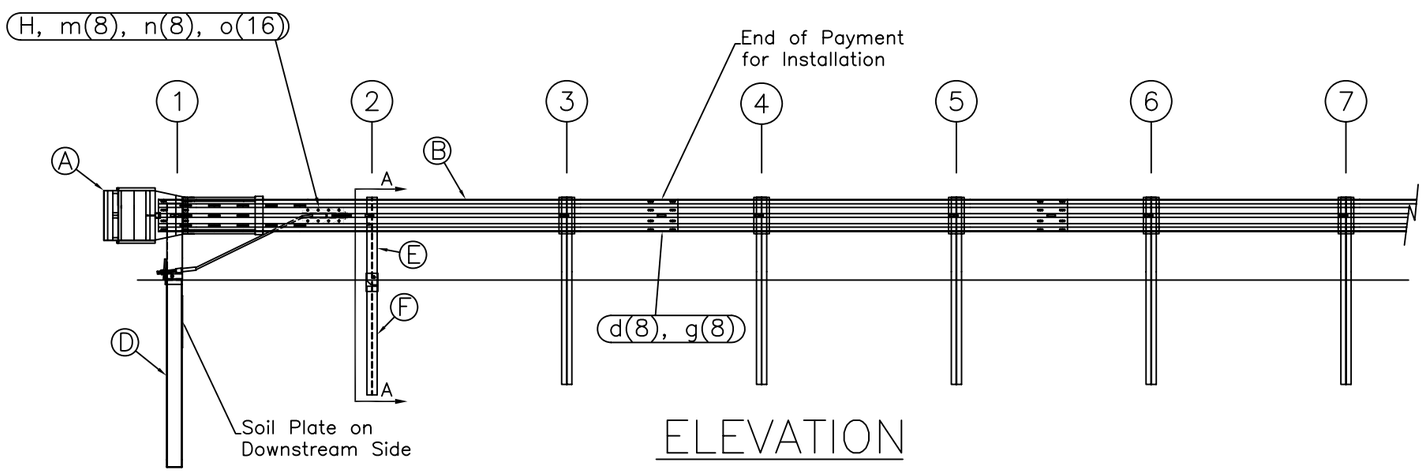

ELEVATION

ITEM	QTY	BILL OF MATERIALS	ITEM NO.
A	1	IMPACT HEAD	F3000
B	1	W-BEAM GUARDRAIL END SECTION, 12 Ga.	MGS-SF1303
C	1	FIRST POST TOP (6X6X$\frac{1}{8}$" Tube)	TPHP1A
D	1	FIRST POST BOTTOM (6' W6X15)	TPHP1B
E	1	SECOND POST ASSEMBLY TOP	UHP2A
F	1	SECOND POST ASSEMBLY BOTTOM	HP3B
G	1	BEARING PLATE	E750
H	1	CABLE ANCHOR BOX	S760
J	1	BCT CABLE ANCHOR ASSEMBLY	E770
		HARDWARE (ALL DIMENSIONS IN INCHES)	
a	2	5/16 x 1 HEX BOLT GRD 5	B5160104A
b	4	5/16 WASHER	W0516
c	2	5/16 HEX NUT	N0516
d	9	5/8 Dia. x 1 1/4 SPLICE BOLT (POST #2)	B580122
e	1	5/8 Dia. x 9 HEX BOLT GRD 5	B580904A
f	3	5/8 WASHER	W050
g	10	5/8 Dia. H.G.R NUT	N050
h	1	3/4 Dia. x 8 1/2 HEX BOLT GRD A449	B340854A
j	1	3/4 Dia. HEX NUT	N030
k	2	1 ANCHOR CABLE HEX NUT	N100
l	2	1 ANCHOR CABLE WASHER	W100
m	8	CABLE ANCHOR BOX SHOULDER BOLT	SB58A
n	8	1/2 A325 STRUCTURAL NUT	N055A
o	16	1 1/16 OD x 9/16 ID A325 STR. WASHER	W050A

GENERAL NOTES:
1. All bolts, nuts, cable assemblies, cable anchors and bearing plates shall be galvanized.
2. The lower sections of the Posts 1&2 shall not protrude more than 4 in above the ground (measured along a 5' cord). Site grading may be necessary to meet this requirement.
3. The lower sections of the hinged posts should not be driven with the upper post attached. If the post is placed in a drilled hole, the backfill material must be satisfactorily compacted to prevent settlement.
4. When competent rock is encountered, a 12" Ø post hole, 20 in. deep cored into the rock surface may be used if approved by the engineer for post 1. Granular material will be placed in the bottom of the hole, approximately 2.5" deep to provide drainage. The first post can be field cut to length, placed in the hole and backfilled with suitable backfill. The soil plate may be trimmed if required.
5. The breakaway cable assembly must be taut. A locking device (vice grips or channel lock pliers) should be used to prevent the cable from twisting when tightening nuts.

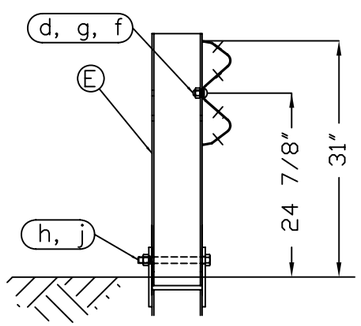

SECTION A-A
Post #2

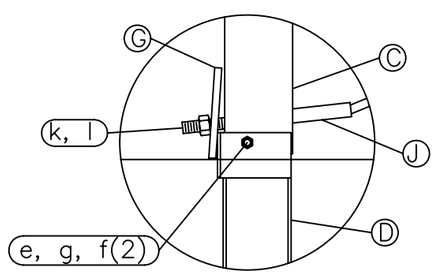

Post #1 Connection Detail

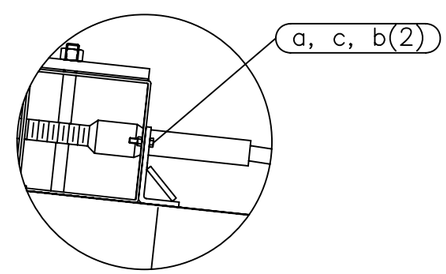

Impact Head Connection Detail

Road Systems, Inc.
Big Spring, TX
Phone: 432-263-2435
or Phone: 330-346-0721

FLEAT-SP-MGS Terminal
Midwest Guardrail System
31" Top of Rail

Sheet: 1
Date: 02/24/10
By: JRR
Drawing Name: FLT-SP-S-MGS
Scale: None
Rev: 0

OFFSET NOTES:
1) POST OFFSET DIMENSIONS ARE GIVEN TO THE CENTER OF THE TRAFFIC FACE OF POSTS, EXCEPT AT POSTS #7 & #8, WHERE DIMENSION IS TO CENTER OF THE TRAFFIC FACE OF THE BLOCKOUTS.
2) GUARDRAIL BETWEEN POST 1-7 IS ON A STRAIGHT LINE FLARE.

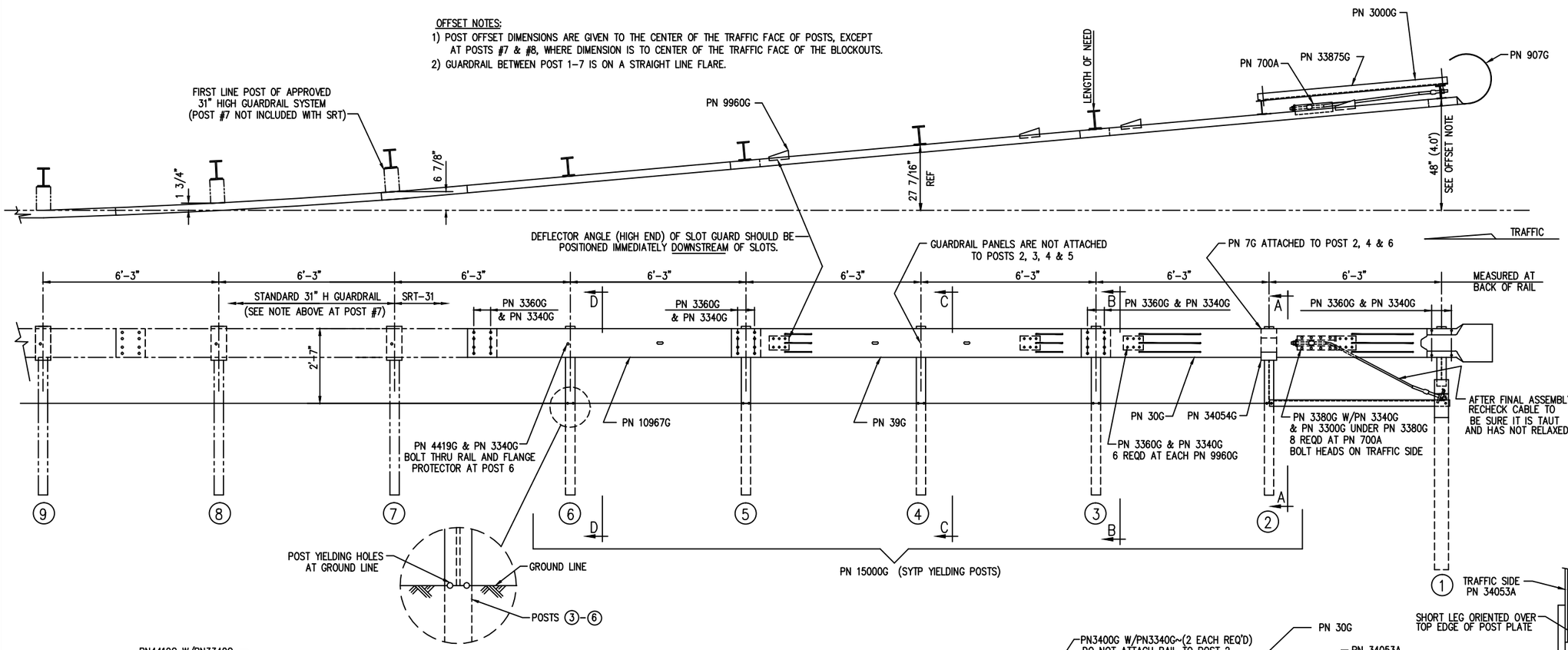

BILL OF MATERIAL

	PN	QTY	DESCRIPTION
	7G	3	12/6"/FLG PROTECTOR (AT POST 2, 4 & 6)
	30G	1	12/12'6/S SRT-1 (GUARDRAIL)
	39G	1	12/12'6/S SRT-2 (GUARDRAIL)
	700A	1	CABLE ANCHOR BRACKET
	907G	1	12/BUFFER/ROLLED (TERMINAL)
	3000G	1	3/4 x 6'-6" CABLE
HARDWARE	3240G	2	5/16" WASHER (AT POST 1)
HARDWARE	3245G	2	5/16" HEX NUT (AT POST 1)
HARDWARE	3300G	12	5/8" WASHER
HARDWARE	3340G	67	5/8" HEX HGR NUT
HARDWARE	3360G	52	5/8"ø x 1 1/4" HGR SPLICE BOLT
HARDWARE	3380G	8	5/8"ø x 1 1/2" HEX HD BOLT
HARDWARE	3400G	4	5/8"ø x 2" HGR POST BOLT (AT POSTS 1, 2 & 4)
HARDWARE	3391G	2	5/8"ø x 1 3/4" HEX BOLT (A325) (AT STRUT)
HARDWARE	3900G	2	1" WASHER (AT CABLE)
HARDWARE	3910G	2	1" HEX NUT (AT CABLE)
HARDWARE	4211G	2	5/16"ø x 1 3/4" HEX BOLT (AT POST 1)
HARDWARE	4419G	1	5/8"ø x 1 3/4" COUNTERSUNK HD BOLT (AT POST 6)
	9960G	4	SLOT GUARD BRACKET
	10967G	1	12/9'4.5/3'1.5/S SRT-3 (GUARDRAIL)
	15000G	5	6'-0" SYT POST (W6 X 8.5)
	33909G	1	CABLE ANCHOR BRACKET (AT POST 1)
	33875G	1	ANGLE STRUT 3 x 3 x 1/4
	34052A	1	CR POST 1 BOT (W6 x 15)
	34053A	1	CR POST 1 TOP (W6 x 8.5)
	34054G	1	POST SHELF ANGLE (AT POST 2)

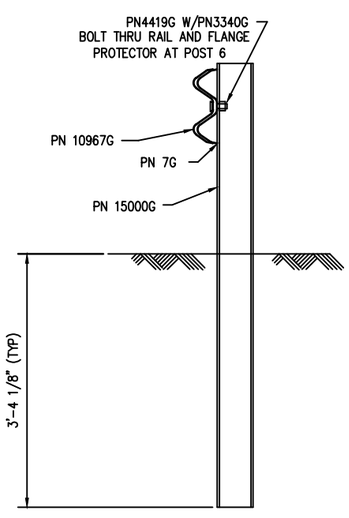

SECTION "D-D"
(@ POST #6)

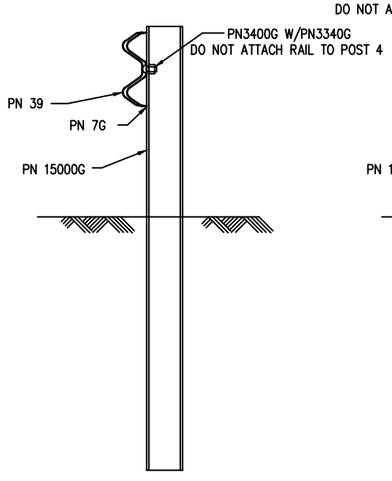

SECTION "C-C"
(@ POST #4)

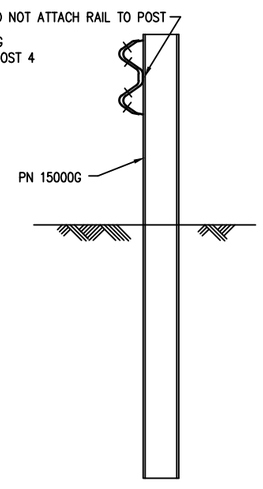

SECTION "B-B"
(@ POST #3 & #5)

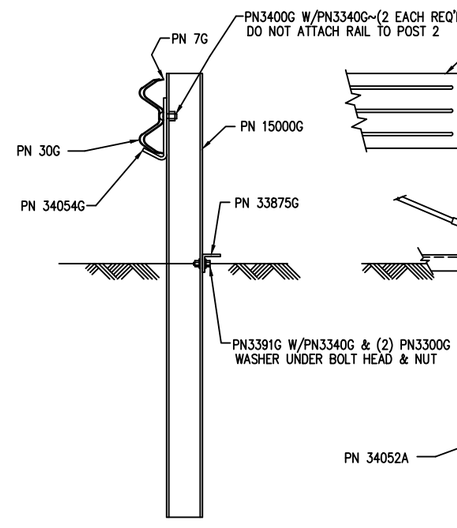

SECTION "A-A"
(@ POST #2)

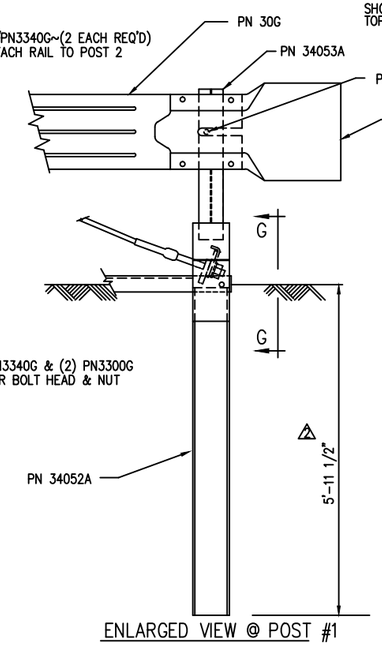

ENLARGED VIEW @ POST #1

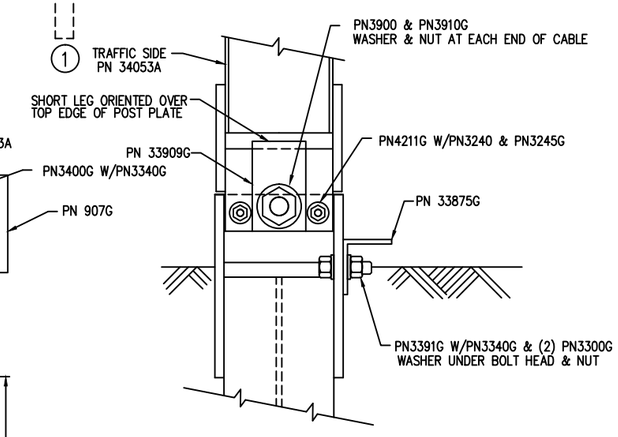

VIEW "G-G"
(@ POST #1)

REV.	CHK'D	BY	DATE	REMARKS
4	BT	LH	10/6/10	OFFSET POSTS #7 & #8
3	BT	LH	2/26/09	REVISED HARDWARE
2	SG	LH	7/28/08	REVISED POST #1 LENGTH IN GROUND
1	SG	LH	1/16/08	REVISED HARDWARE QUANTITY IN BILL OF MATERIAL

SRT-31

SLOTTED RAIL TERMINAL SRT-31 (31" H)
ERECTION DETAILS
(3 PANELS, CR AND SYT POSTS)

DRAWN	BT
CHECKED	SG
SCALE	NTS
DATE	10/30/07
ENG. FILE #	SS436-01E
SHT.No.	E1 OF 1
DRAWING NO.	SS 436
REV.	4

The drawings and the information shown thereon are copyrighted by Trinity Highway Products (2010) and the sole property of Trinity Highway Products. Neither the drawings nor such information is to be used for any purpose other than that for which it was specifically furnished from Trinity Highway Products, LLC., nor is any reproduction authorized without written permission.

TRINITY HIGHWAY PRODUCTS, LLC.
2525 STEMMONS FREEWAY
DALLAS, TX 75207

BARRIER SYSTEMS INC

TECHNICAL BRIEF

180 River Road • Rio Vista, CA 94571 • Tel 707-374-6800 • Fax 707-374-6801
Email: info@barriersystemsinc.com • Website: barriersystemsinc.com

Product Specification

ABSORB 350™ TL-3
Non-Redirective, Gating, Crash Cushion
Applied to Permanent and Portable Concrete Barrier

I. General

The ABSORB 350™ TL-3 System is a Non-Redirective, Gating, Crash Cushion in accordance with the definitions in the National Cooperative Highway Research Program Report 350 (NCHRP 350). The system shall be tested and perform in an acceptable manner in accordance with the guidelines of NCHRP 350 at Test Level 3 (100 km/h).

II. Performance

The ABSORB 350 is designed to absorb the impact energy of an errant vehicle in accordance with NCHRP 350 guidelines for Non-Redirective, Gating, Crash Cushions. The system is designed to be attached to Permanent Concrete Barrier and Portable Concrete Barrier with section lengths of at least 3.1 meters (10 feet). When attached in accordance with the manufacturers instructions, the ABSORB 350 system is capable of safely stopping a 2000 kg (4400 pound) pickup truck impacting the system at 100 km/h (62.3 mph) and 0 degrees and an 820 kg (1800 pound) compact vehicle impacting the system at 100 km/h (62.3 mph), 0 degrees and with an offset of the vehicle and system centerlines of one-fourth the vehicle width.

A. When properly installed according to the manufacturer's recommendations the ABSORB 350 system shall be fully tested to and meet the recommended structural adequacy, occupant risk, and vehicle trajectory criteria set forth in NCHRP 350 for Test Level 3 Non-Redirective, Gating Crash Cushions (NCHRP 350 TL-3):

1. Impact at 0 degrees at w/4 offset (centerline of vehicle offset 1/4 width of vehicle from centerline of system) at 100 km/h with an 820C vehicle. This is Test 3-40 of NCHRP 35.

2. Impact at 0 degrees into center nose of device (0 offset from centerline of vehicle) at 100 km/h with a 2000P vehicle. This is Test 3-41 of NCHRP 350.

3. Impact at 15 degrees into center nose of device (0 offset from centerline of vehicle) at 100 km/h with an 820C vehicle unless the Federal Highway Administration, due to acceptable performance in test 3-40, waives this test. This is Test 3-42 of NCHRP 350.

4. Impact at 15 degrees into center nose of device (0 offset from centerline of vehicle) at 100 km/h with a 2000P vehicle. This is Test 3-43 of NCHRP 350.

5. Impact at 20 degrees along the side of the unit (with the centerline of the vehicle aligned with the centerline of the attachment of the barrier and the ABSORB 350™) at 100 km/h with a 2000P vehicle. This is Test 3-44 of NCHRP 350 as modified by the Federal Highway Administration.

B. The impact velocity of a hypothetical front seat passenger against the vehicle interior as calculated from the longitudinal vehicle acceleration and 600 mm [23 5/8 in] forward displacement, and the lateral vehicle acceleration and 300 mm [1 ft] lateral displacement shall be less than 12 m/s (39.3 ft/s] and the highest 10 ms average vehicle acceleration in the longitudinal and lateral directions subsequent to the instant of hypothetical occupant impact shall be less than 20 g's in NCHRP 350 tests 3-40, 41, 42 and 43.

For TL-3 impacts detached debris shall not show potential for penetrating the vehicle occupant compartment or presenting a hazard to other traffic, pedestrians, or workers in a work zone. The vehicle shall remain upright during and after the collision although moderate roll, pitch and yaw may occur.

III. Description of System

A. The ABSORB 350 system shall be made up of the following components and the system shall be fabricated from materials conforming to the following specifications:

1. ABSORB 350 Energy Absorbing Element – Each element of the system shall be composed of a plastic container, steel side bars, end plate/ hinge assemblies, an evaporation prevention cap with tether and appropriate fasteners. The overall dimensions of the assembled element are 610 mm (24 inches) wide, 812 mm (32 inches) tall and 1000 mm (39 1/2 inches) long, as shown in the attached drawing (B000524). Each element of the system shall weigh approximately 50 kg (110 pounds) when empty and 325 kg (717 pounds) when filled. The first element of the assembled system should always be empty of fluid with the evaporation prevention cap installed. All other elements of the system should be filled with fluid in accordance with the installation instructions and the evaporation prevention cap shall be securely installed. All elements shall be attached in accordance with the installation instructions and drawings supplied by the manufacturer.

a. The plastic elements shall be molded from Linear Low Density Polyethylene.

b. All steel sidebars, end plate/hinge assemblies shall be fabricated from mild steel in conformance with ASTM A-36 specifications.

c. The evaporation prevention cap shall be molded from low density polyethylene

2. ABSORB 350 Nose Piece – Each ABSORB 350 system shall contain one Nose Piece at the front of the system. The Nose Piece is approximately 620 mm (24 3/8inches) wide, 825mm (32 1/2inches) tall and 610mm (24 inches) long, as shown in the attached drawing (B000526). The Nose Piece shall weigh approximately 60 kg (132 pounds) and shall be attached to the first Energy Absorbing Element in accordance with the installation instructions and drawings supplied by the manufacturer.

   a. The Nose Piece shall be fabricated from mild steel in conformance with ASTM A-36.

   b. The Nose Piece shall also have an aluminum skin on the front portion to provide an aesthetic cover and a place for attaching traffic control signage, if needed. This skin shall be fabricated from 5052 H32 in conformance with ASTM B209 and shall be attached to the steel portion of the Nose Piece with adhesives and pop rivets.

3. ABSORB 350 Transition Hardware for PCB – The transition configuration is as shown in the attached drawing B000608.

   a. PCB Transition Hardware is fabricated from mild steel in conformance with ASTM A-36 as shown in the attached drawing (B000531). The steel components shall weigh approximately 80 kg (176 pounds).

B. Attachment of the ABSORB 350™ system to PCB systems shall require nine (9) Energy Absorbing Elements. Assembly should be in compliance with the manufactures drawings and written instructions.

C. The ABSORB 350™ system shall be able to be refurbished after a NCHRP 350 type impact in less than 1 hour with two people, an adequate fluid supply and refurbishment materials.

D. The ABSORB 350™ system shall not require attachment to a foundation. Attachment to the PCB system will require attachment in accordance with the manufacturer's drawings and instructions.

E. The ABSORB 350™ system shall be assembled and filled with fluid in accordance with the manufacturers instructions. If there is a possibility that the fluid in the system could freeze due to low temperatures, proper antifreeze agents should be used in accordance with local standards and environmental regulations.

IV. Application of Safety Appurtenances

Highway safety appurtenances should be applied to hazardous sites in accordance with the guidelines and recommendations in the American Association of State Highway Transportation Officials (AASHTO), "Roadside Design Guide," 1989, and other Federal Highway Administration and State Department of Transportation requirements. Placement and use of the ABSORB 350 system should comply with these specifications and guidelines.

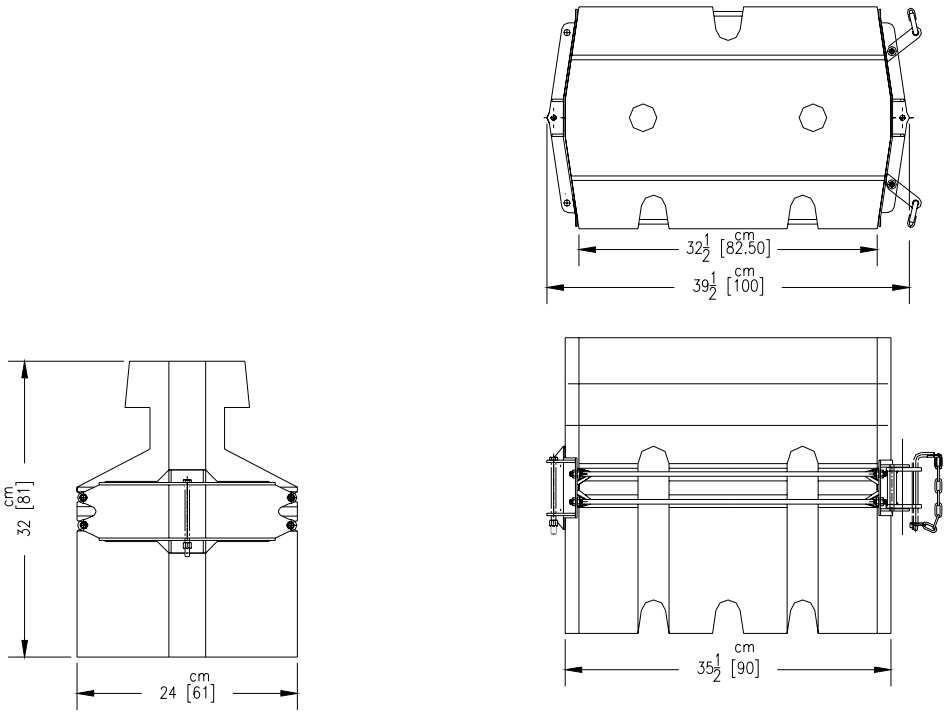

NOTE:
THICKNESS OF WELD TO BE EQUAL TO THE THINNER OF 2 PIECES BEING JOINED. WELD TO BE ALL AROUND UNLESS OTHERWISE NOTED.

© 2000 Barrier Systems, Inc.

The information heron is proprietary to Barrier Systems Inc. and shall not be disclosed, duplicated or used otherwise without the express written approval of Barrier Systems Inc.

REV.	CHANGES	DATE	BY	REQ'D	NEXT ASSY.	ITEM

SCALE: 1=10

	DATE	INIT.
DRAWN BY	3/2/00	R.R.C.
APPR'D BY		

Standard Tolerance
Angular ± 1/2°
Fractional ± 1/16
Decimal ± .010

TITLE : ABSORB 350 ELEMENT

MODEL	DRAWING NUMBER	REV.
	B000524	

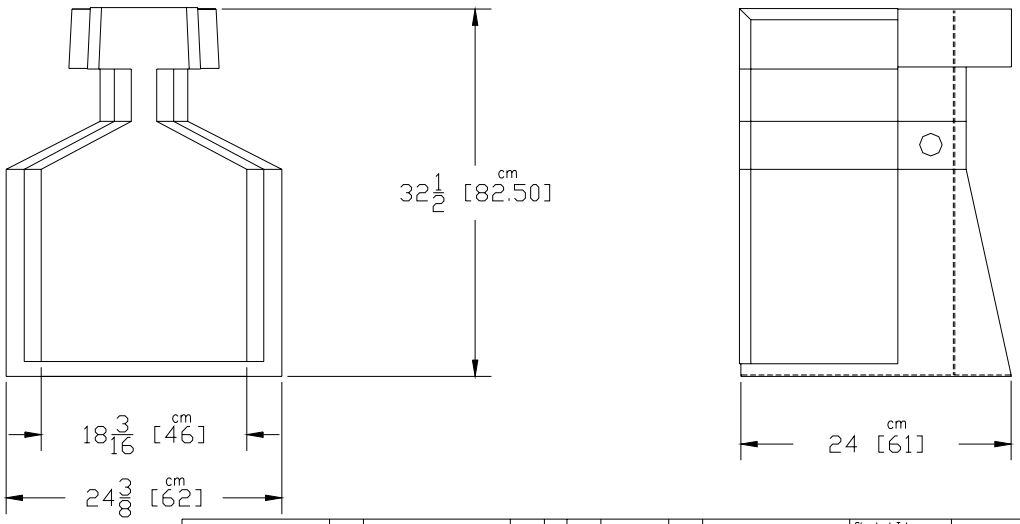

NOTE:
THICKNESS OF WELD TO BE EQUAL TO THE THINNER OF 2 PIECES BEING JOINED. WELD TO BE ALL AROUND UNLESS OTHERWISE NOTED.

© 1999 Barrier Systems, Inc.
The information heron is proprietary to Barrier Systems Inc. and shall not be disclosed, duplicated or used otherwise without the express written approval of Barrier Systems Inc.

REV.	CHANGES	DATE	BY	REQ'D	NEXT ASSY.	ITEM
						1

SCALE: EIGHTH

	DATE	INIT.
DRAWN BY	05/24/00	RSS
APPR'D BY		

TITLE : ABSORB 350
NOSE PIECE

Standard Tolerance
Angular ± 1/2°
Fractional ± 1/16
Decimal ± .010

MODEL	DRAWING NUMBER	REV.
	B000526	

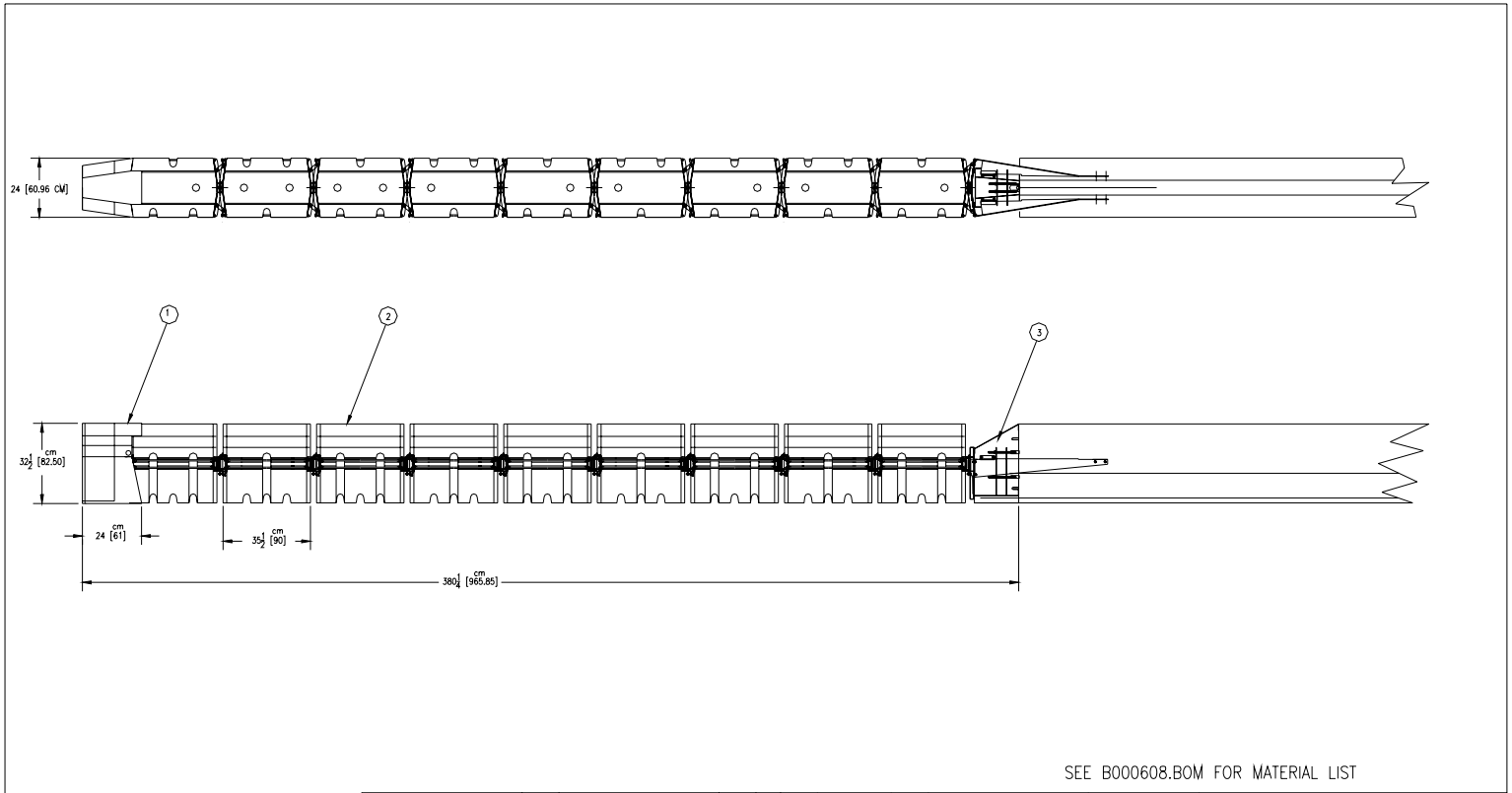

SEE B000608.BOM FOR MATERIAL LIST

NOTE:
THICKNESS OF WELD TO BE EQUAL TO THE THINNER OF 2 PIECES BEING JOINED. WELD TO BE ALL AROUND UNLESS OTHERWISE NOTED.

© 2000 Barrier Systems, Inc.

The information heron is proprietary to Barrier Systems Inc. and shall not be disclosed, duplicated or used otherwise without the express written approval of Barrier Systems Inc.

REV.	CHANGES	DATE	BY	REQ'D	NEXT ASSY.	ITEM

SCALE: 1=40

	DATE	INIT.
DRAWN BY	5/24/00	DGB
APPR'D BY		

Standard Tolerance
Angular ± 1/2°
Fractional ± 1/16
Decimal ± .010

TITLE : ASSEMBLY SYSTEM, ABSORB TL3 P.C.B.

MODEL

DRAWING NUMBER: B000608

REV.

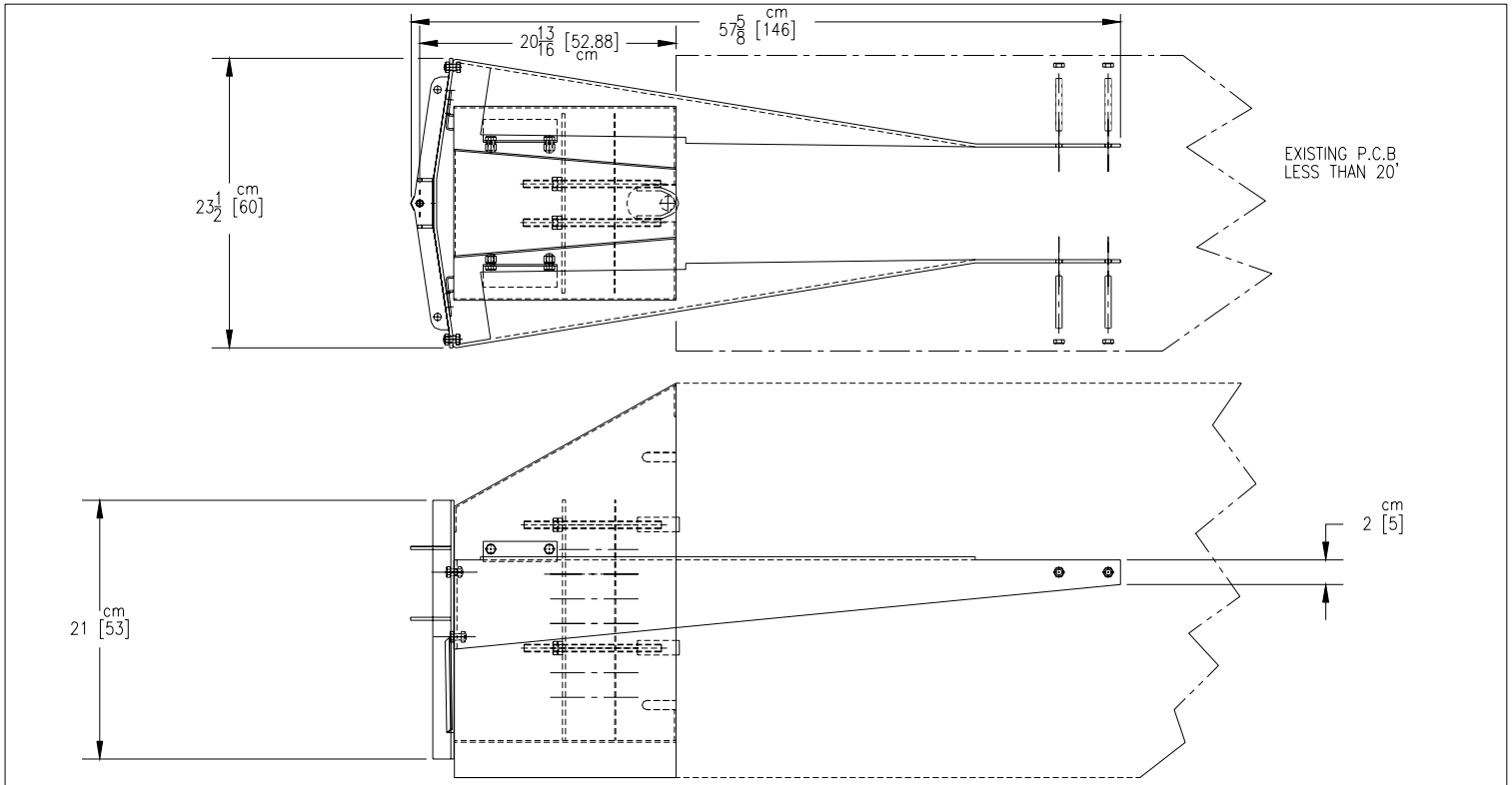

NOTE:
THICKNESS OF WELD TO BE EQUAL TO THE THINNER OF 2 PIECES BEING JOINED. WELD TO BE ALL AROUND UNLESS OTHERWISE NOTED.

© 2000 Barrier Systems, Inc.

The information heron is proprietary to Barrier Systems Inc. and shall not be disclosed, duplicated or used otherwise without the express written approval of Barrier Systems Inc.

REV.	CHANGES	DATE	BY	REQ'D	NEXT ASSY.	ITEM

SCALE: EIGHTH

	DATE	INIT.
DRAWN BY	05/24/00	R.R.C.
APPR'D BY		JM

Standard Tolerance
Angular ± 1/2°
Fractional ± 1/16
Decimal ± .010

TITLE : TRANSITION HARDWARE
ABSORB 350 TL2
P.C.B.

MODEL	DRAWING NUMBER	REV.
	B000531	

ACZ-350™

PORTABLE TL-2 & TL-3 END TREATMENT

OVERVIEW

The ACZ-350 System combines ease of use and NCHRP 350, gating, non-redirective TL-2 and TL-3 crash cushion performance for work zone protection. This partially reuseable crash cushion can be easily transported, and installed with No Roadway Anchors.

SUPERIOR IMPACT PERFORMANCE

The unique design of the ACZ-350 systems protects errant drivers from impacting concrete barrier ends, and also contains the errant vehicle from vaulting into the workzone.

FEATURES AND BENEFITS

- No Vaulting
- Safely contains errant vehicle
- Accommodates impacts up to 2,000 kg, (4,500 lbs) traveling at speeds up to 100 km/h (62 mph)
- Simple and Fast Installation
- Protects Permanent or Temporary, Steel or Concrete Barrier
- Ideal for Work Zones
- No Foundation or Anchoring

EASY CLEAN-UP
NARROW PROFILE
MINIMUM INTRUSION
LOW COST/ AFFORDABLE
QUICK/EASY TO MOVE

NON-REDIRECTIVE, GATING CRASH CUSHION SYSTEM

All Crash Cushions defined as Non-redirective and Gating require a clear zone. Clear Zones are areas behind the crash cushion that NO workers, machinery, obstructions or other debris could interfere with an errant vehicle. This area should also remain relatively flat. If there are any questions or concerns, please contact your local Energy Absorption Systems, Inc. representative.

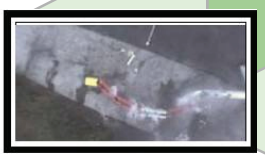

ACZ-350™

ENERGY ABSORPTION SYSTEMS, INC.

SAVING LIVES BY DESIGN®

www.energyabsorption.com

ACZ-350 SYSTEM
GENERAL SPECIFICATIONS

I. GENERAL

A. The ACZ-350 is especially suited for use with Portable Concrete Median Barrier (PCMB). When assembled as specified by the manufacturer, the components of the ACZ-350 shall provide an integral non-redirecting crashworthy end treatment.

B. All elements, components, and subassemblies of the ACZ-350 shall be designed, manufactured, and/or supplied by Energy Absorption Systems, Inc., of Chicago, Illinois.

II. DESCRIPTION OF THE SYSTEM

A. The ACZ-350 TL-3 system shall consist of a nose, four water filled barrier sections**,** and a transition.

1. The nose segment shall be constructed of 14 ga steel, free of water and connect to the lead barrier sections.

2. Barrier sections shall be composed of the following:

a) Each barrier section shall be constructed of a lightweight, recyclable, linear low density polyethylene plastic shell, with UV stabilizers and antioxidants, designed to accept water ballast.

b) The approximate physical dimensions and capacities of the barrier section shall be: length (pin to pin) 2019 mm [79.5 in.]; width: 546 mm [21 1/2 in.]; height: 826 mm [32 1/2 in.].

c) Barrier sections shall be constructed in yellow, white or workzone safety orange colors for high visibility.

d) Each barrier section shall be equipped with a bent 1/8" steel piece recess in the top of the section, for suitable tensioning and compressive characteristics.

e) Each barrier section shall be constructed to interact with an impacting vehicle.

f) The ends of each barrier section shall be constructed with vertically aligned knuckles which interlock with those of abutting sections and accept a 51 mm [2 in.] dia. hollow steel connecting pin. The connecting pin shall be constructed to securely connect adjoining sections and their respective bent 1/8" steel pieces. A galvanized bolt, lock washer, and 102mm [4 in.] washer will retain the pin for suitable impact performance.

g) Each barrier section shall be constructed with elevated forklift openings to allow for mechanical lifting when empty or full.

h) Each barrier section shall be constructed with two 127 mm [5 in.] diameter quick fill openings with covers, and a 38 mm [1 1/2 in.] diameter rapid release gate valve to allow quick draining of the water ballast. A reflectorized fill level indicator shall be constructed in the top of each section to allow quick verification that the section is adequately full of water ballast.

i) The back two barrier sections shall include an internal galvanized steel framework and four strap assemblies recessed into the ribbed sidewalls to provide additional rigidity during impacts. Empty weight: 64 kg [140 lb.]; water ballast: 549 liters [145 gallons]. Weight when filled shall be approximately 612kg (1350 lbs). Weight does not include strap assemblies or connections.

j) The front two barrier sections shall <u>not</u> include an internal galvanized steel framework or four strap assemblies recessed into the ribbed sidewalls to ensure proper performance during impacts. Empty weight: 45 kg [99 lb.]; water ballast: 549 liters [145 gallons]. Weight when filled shall be approximately 595kg (1312 lbs).

3. ACZ-350 Transition Section

a) The transition section shall be constructed of galvanized steel.

b) The approximate physical dimensions of the transition section shall be: length (pin to pin) 510 mm [20 in.]; width: 621 mm [24.5 in.]; height: 813 mm [32 in.];

c) The section shall attached to the PCMB with two ¾" B7 all thread rods, four flat washers, four lock washers, and four nuts, in addition to a connection pin and two threaded "U" shaped fasteners.

III. PERFORMANCE CRITERIA

A. The ACZ-350 System is a narrow, non-redirective, gating crash cushion and shall have been tested and evaluated per the criteria set forth in the National Cooperative Highway Research Program Report 350 (NCHRP-350) in accordance with TL-3 criteria. An FHWA acceptance letter shall be available authorizing its use on the National Highway System.

IV. DESIGN AND SELECTION CRITERIA

A. Design, selection, and placement of the ACZ-350 System should conform with applicable guidelines in:

1. U.S. Department of Transportation, Federal Highway Administration, "Manual on Uniform Traffic Control Devices", Washington, D.C. U.S. Government Printing Office, 2003 and all subsequent revisions.
2. American Association of State Highway and Transportation Officials, "Roadside Design Guide", Washington, D.C. AASHTO, January 2002 and all subsequent revisions.

B. Installation of the ACZ-350 System shall be accomplished in accordance with the recommendations of Energy Absorption Systems, Inc., and the ACZ-350 manual.

ACZ-350™

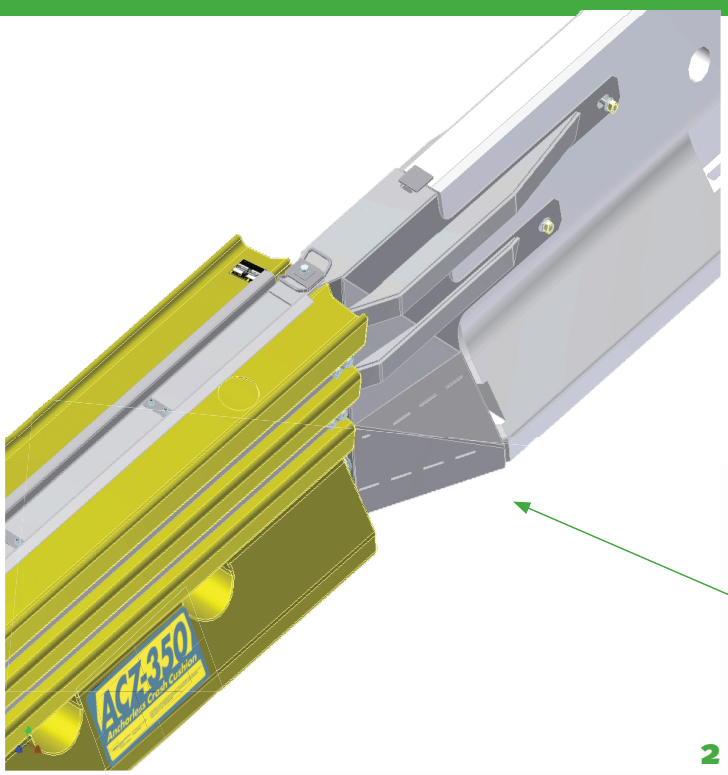

EASY DEPLOYMENT AND REMOVAL

The ACZ-350 System can be easily unloaded and positioned without cranes or heavy equipment. Deployment involves three simple steps:

1. Unload
2. Position and pin barrier sections.
3. Fill Segments with water

SPECIFICATIONS	TL-3
Length	31'-7" (9.6 m)
Width	1'-10" (.6m)
Height	2' 9" (.8m)
Weight (empty)	1350 lbs
Weight (full)	6160 lbs

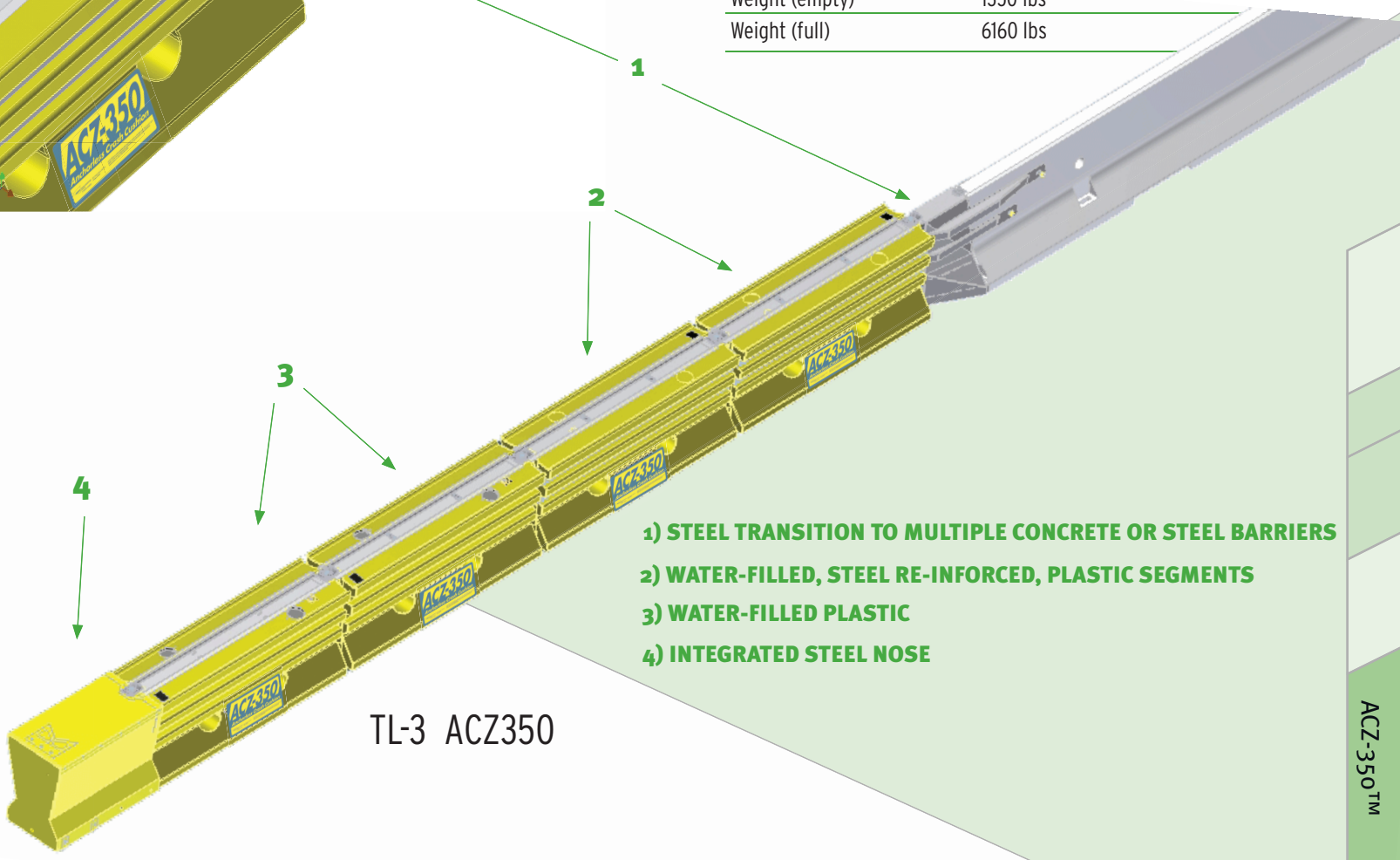

1) STEEL TRANSITION TO MULTIPLE CONCRETE OR STEEL BARRIERS

2) WATER-FILLED, STEEL RE-INFORCED, PLASTIC SEGMENTS

3) WATER-FILLED PLASTIC

4) INTEGRATED STEEL NOSE

TL-3 ACZ350

DISTRIBUTED BY:

Quixote Transportation Safety

35 East Wacker Drive • Chicago, IL 60601
Tel: (312) 467-6750 • Fax: (312) 467-9625
www.energyabsorption.com

ENERGY ABSORPTION SYSTEMS, INC.

www.quixtrans.com

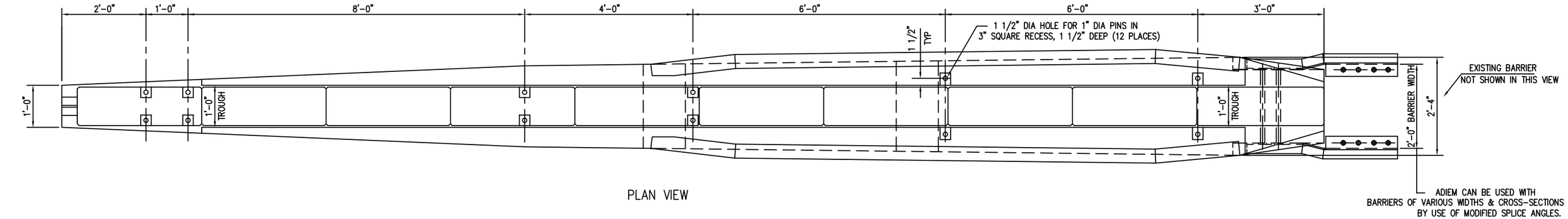

PLAN VIEW

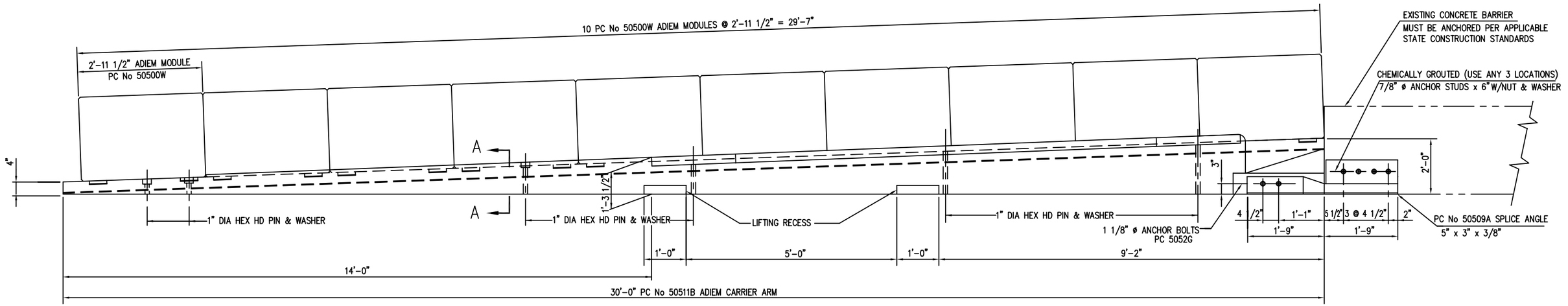

ELEVATION VIEW

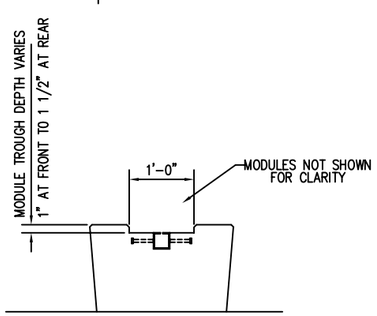

SECTION A–A

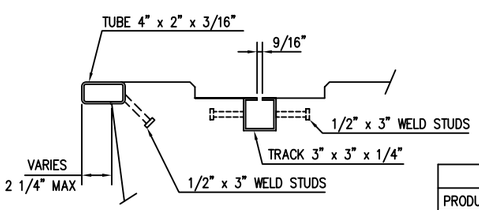

TRACK & BUMPER DETAIL

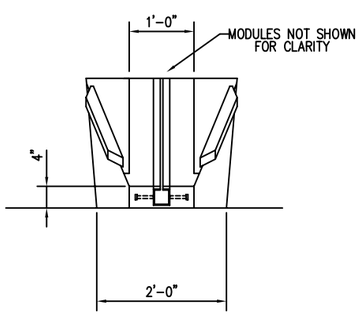

FRONT ELEVATION VIEW

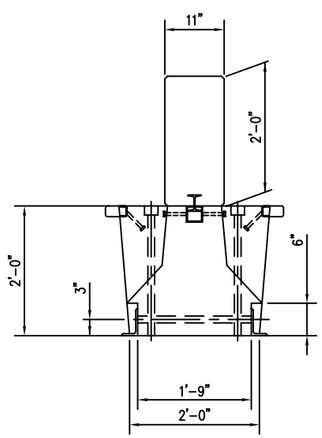

REAR ELEVATION VIEW

BILL OF MATERIAL

PRODUCT CODE	QTY	DESCRIPTION	REMARKS
50500W	10	MODULES x 2'-11 1/2"	
50511B	1	BASE x 30'-0"	
50508A	1	SPLICE ANGLE x 3'-6" RT	
50509A	1	SPLICE ANGLE x 3'-6" LT	
6549W	1	GARNA-THANE COATING (1 GAL)	
5052G	2	1 1/8" ø x 25" HEX HD BOLT	
4963G	4	1 1/8" WASHER	
3976G	2	1 1/8" HEX NUT	
4616G	6	7/8"ø STUD x 6" (FULL THD)	
3725G	6	7/8" WASHER	
3735G	6	7/8" HEX NUT	
☆ 5206B	1	ADHESIVE HY150 CARTRIDGE	
3900G	12	1" WASHER	
5665G	SEE SCH	1" ø HEX HD PIN x 48"	SEE NOTES 1-5
5642G	↓	1" ø HEX HD PIN x 42"	↓
5650G		1" ø HEX HD PIN x 36"	
5641G		1" ø HEX HD PIN x 30"	
5646G		1" ø HEX HD PIN x 24"	
5643G		1" ø HEX HD PIN x 18"	

ANCHOR PIN SCHEDULE PER SURFACE (SEE NOTES 1-5)		
PCC	ACP	BASE
		4
	4	
4		4
	4	4
4	4	
4		

☆ EACH CARTRIDGE INCLUDES 1 EACH : MIXER HY 150 CARTDIDGE(NOZZLE)
: FILLER HIT HY 150 (FILLER TUBE)

NOTES:
1) ANCHOR PINS ARE 1" DIA HEX HD, POINTED, GALV RODS (A307)
2) PORTLAND CEMENT CONCRETE (PCC)
3) ASPHALTIC CONCRETE (ACP)
4) BASE AND/OR COMPACTED SOIL (BASE)
5) ADIEM INSTALLATION NOT RECOMMENDED ON LOOSE SOIL.

ADIEM INSTALLATION INSTRUCTIONS

1. The ADIEM base is to be placed on a smooth surface (the same horizontal plane as the concrete barrier) and parallel to the mainline or ramp traveled lane(s).
2. Install anchor rods for ADIEM base by driving in soil or soft asphalt or driving in pre-drilled holes for hard asphalt or concrete (no epoxy required). The base should not be moved after the holes are drilled. The holes should be drilled using, at a mininum, a 35# hammer and minimum 36 inch long drill bit. (A 50# hammer is recommended.)
3. Attach connection brackets to base with two (2) 1 1/8" X 25" hex head bolts provided. Then field drill holes in the existing barrier and attach connection brackets to it with chemically grouted hardware provided.
4. Oil the ADIEM base track. Slide the modules onto the base. Be careful not to damage edges of the modules while sliding onto the base.
5. If the modules are scuffed or nicked, apply GARNA-THANE coating to the affected area.
6. Recommended tools and equipment:
   - 35/50# air hammer/drill
   - 1 3/8" ø x 36" rock drill
   - 1 1/4" ø x 12" rock drill
   - Sledge hammer
   - Oil
   - Wrenches

OPTIONAL ANCHOR ITEMS	
PRODUCT CODE	DESCRIPTION
5205B	ADHESIVE DISPENSER
5207B	MIXER HIT HY150 (NOZZLE)
5208B	FILLER HIT HY150 (FILLER TUBE)
5209B	BIT TE-C+ 11/16-18 (11/16" ø BIT)

ALTERNATE ADIEM INSTALLATION INSTRUCTIONS

1. At a holding site, the modules are slid into the ADIEM base after oiling the base track. Be careful not to damage the edges of the modules while sliding them onto the base.
2. If the modules are scuffed or nicked, apply GARNA-THANE coating to the affected area.
3. The unit is then delivered to the job site. The unit is to be placed on a smooth surface (the same horizontal slope as the concrete barrier) and parallel to the mailine or ramp traveled lane (s).
4. The front module should be removed so the remaining modules can be shifted for easy access for drilling the anchor rod holes.
5. Install anchor rods for ADIEM base by driving in soil or soft asphalt or driving in predrilled holes for hard asphalt or concrete (no epoxy required). The base should not be moved after the holes are drilled. The holes should be drilled using, at a minimum, a 35# hammer and a minimum 36 inch long drilling bit. (A 50# hammer is recommended.)
6. Attach connection brackets to base with two (2) 1 1/8" X 25" hex head bolts provided. Then field drill holes in the existing barrier and attach connection brackets to it with chemically grouted hardware provided.

REV.	CHK'D	BY	DATE	REMARKS
6	B.T.	L.H.	12/10/03	REPLACED GROUT WITH HILTI, UPDATED DWG
5		L.H.	03/12/03	DELETED NOTE #7, REVISED NOTE #3
4	D.D.	L.H.	12/17/99	REVISED COATING, CHANGED TITLE BLOCK
3		BT	3-14-97	DELETED PC 5484, ADDED PC 5052, CHG QTY PC 3976
2		BT	2-14-97	GENERAL UPDATES

ADIEM 30'

ERECTION DETAILS

TRINITY INDUSTRIES, INC.
HIGHWAY SAFETY PRODUCTS
2525 STEMMONS FREEWAY, DALLAS, TX 75207

DRAWN	B.TAKACH
CHECKED	D.D.
APPROVED	
DATE	3/19/96
ENG. FILE #	SS349-01E
SHT.No.	E1 OF 1
DRAWING NO.	SS 349
REV.	6

This drawing and the information shown thereon is the sole property of TRINITY INDUSTRIES, INC. Neither the drawing nor such information is to be used for any purpose other than that for which it was specifically furnished by TRINITY INDUSTRIES, INC., nor is any reproduction authorized without written permission.

REACT 350®

Reusable Energy Absorbing Crash Terminal

The REACT 350® consists of High Molecular Weight/High Density Polyethylene (HMW/HDPE) cylinders. The system is NCHRP 350 Test 1, Test Level 2 and Test Level 3 compliant as a redirective, non-gating crash cushion. The REACT 350® has proven self-restoring characteristics after being impacted at 62 mph by a 1,808 lb (820 kg) car, and then two (2) successive impacts by a 4,409 lb (2,000 kg) pick-up truck without being repaired or reset. The REACT 350® can be used to shield narrow hazards of up to 36" (910 mm) wide.

The system can be utilized in permanent and work zone sites, or where traffic congestion and maintenance management is a concern for work crews.

Features

- Sectional construction with energy-absorbing, reusable HMW/HDPE cylinders.
- Minimal maintenance and repair of major components.
- Systems available for various lengths, widths and speeds.
- Delivered pre-assembled.
- Low lifecycle costs.
- Cylinder covers available.

Back-Up Structures and Attachments

- Portable or permanent concrete barrier(s).
- Bridge pier(s).
- Bridge parapet(s).
- Square block(s).
- W-beam.
- Thrie-beam.
- Self-contained backup structure(s).
- Concrete back-up structure.

Installation and Repair Advantages

- When impacted in NCHRP 350 testing, the system typically regains 90% of its original shape and capacity with minimal maintenance and repair of major components.
- Units arrive fully assembled.
- NCHRP 350 testing impacts require little to no major component replacement resulting in low life cycle cost.
- Installs on new or existing concrete pad.
- Anchorage options include: asphalt, concrete, or soil-drive pile.

Specifications

Typical nine cylinder unit
(Custom configurations available):

- 30' 3" Long (9.35 m) Self contained back-up structure
- 28' 9" Long (8.80 m) Concrete back-up structure
- 36" (910 mm) width at backup structure
- 4080 lbs. (1851 kg) Self contained back-up structure
- 4310 lbs. (1955 kg) Concrete back-up structure

1-800-527-6050
www.highwayguardrail.com

1-888-323-6374
www.energyabsorption.com

TRINITY
HIGHWAY PRODUCTS
ENERGY ABSORPTION SYSTEMS

BUILDING TOMORROW'S HIGHWAY SAFETY SOLUTIONS TODAY

REACT 350® (36")
GENERAL SPECIFICATIONS

I. GENERAL

All REACT 350 (Reusable Energy Absorbing Crash Terminal 350) shall be produced by Energy Absorption Systems, Incorporated, of Chicago, Illinois.

II. DESCRIPTION OF SYSTEM

A. General

REACT 350® refers to a family of reusable crash cushions made up from arrays of cylinders that have the ability to recover a major portion of their shape, position, and capabilities after being impacted. Transitions are available and may be required depending on the site conditions.

B. Component Description

1. The cylinders shall be made of high molecular weight, high-density polyethylene (HMW/HDPE). Each cylinder shall be nominally 915 mm [36"] in outside diameter and 1.22 m [48"] high. The wall thickness of the cylinders may vary from 20 mm [.8"] to 43 mm [1.8"]. Cylinder color shall be black.

2. The REACT 350 (36") shall have a restraining cable system consisting of heavy galvanized steel wire rope on each side of the system.

3. Two options for backups are available for the REACT 350 (36").

   a. The Self-Contained Backup Assembly has a cable system that begins and ends at the front anchor and is looped through an adjustable tensioning device on the sides of the backup, thus providing two cable strands on each side of the unit.

   b. The Side Mounted Anchor System is designed to be anchored to an existing concrete block. The system shall have two sets of cable strands on each side of the System, thus providing four cable strands on each side of the System.

C. Material Specifications

1. Metal work shall be fabricated from either MI020 Merchant Quality or ASTM A-36 steel. After fabrication, metal work shall be galvanized in accordance

with ASTM A-I23. All welding shall be done by or under the direction of a certified welder.

2. The System shall be assembled with galvanized fasteners. All bolts, nuts and washers shall be Commercial Quality "American National Standard" unless otherwise specified.

III. PERFORMANCE CRITERIA

A. The REACT 350® (36") System shall perform as a re-directive, non-gating crash cushion as specified in the National Cooperative Highway Research Program Report 350, 1993, (NCHRP 350).

1. The REACT 350 (36") Nine Row System shall perform as specified in NCHRP 350 when impacted at a speed of 100 km/h (62 mph).

2. The REACT 350 (36") Six Row System shall perform as specified in NCHRP 350 when impacted at a speed of 90 km/h (55 mph).

3. The REACT 350 (36") Four Row System shall perform as specified in NCHRP 350 when impacted at a speed of 70 km/h (43mph).

4. The REACT 350 (36") System will be able to withstand multiple impacts without cylinder replacement. All cylinders require replacement when the REACT 350 (36") System cannot be pulled out and held at 90% of its original length. It is anticipated that the plastic cylinders will survive in a highway environment for a period ranging from 10 to 15 years unless damaged due to impacts. To ensure full impact performance the unit shall require inspection after each impact and shall be pulled out to its original length.

B. Evaluation Criteria

1. For head-on impacts into the nose, a REACT 350 (36") System shall be specified that is capable of meeting the Occupant Risk Criteria as recommended in NCHRP 350. For vehicles weighing between 820 and 2000 kg [1810 and 4410 lbs.], the theoretical impact velocity of a hypothetical front seat passenger against the vehicle's interior (calculated from vehicle acceleration and 660 mm [24"] forward displacement) shall be less than 12 m/s [39.4 ft/sec]. In addition, the vehicle's highest 10 millisecond average acceleration subsequent to the instant of the hypothetical passenger impact shall be less than 20 G's.

2. The REACT 350 (36") Nine Row System shall be capable of redirecting 2000 kg [4,410 lb.] vehicles that impact the sides of the system at speeds up to 100 km/h [62 mph] at angles of 20° for both right-way and wrong-way impacts (angles measured from system's longitudinal centerline) assuming appropriate

transition hardware is properly installed. The REACT 350 (36") Nine Row System shall be capable of redirecting 820 kg [1,810 lb.] vehicles that impact the sides of the system at speeds up to 100 km/h [62 mph] at angles of 15°.

3. The REACT 350® (36") System shall be designed and constructed so no solid debris is present from the system that can create a hazard on the roadway after either head-on or side angle design impacts.

4. The TL-3 (100 km/hr) version of the narrow REACT shall be capable of protecting against multiple head-on impacts (NCHRP 350 tests 3-30, followed by 3-31, then another 3-31) without requiring any resetting or repair. This test series demonstrates the ability of the REACT to not only self-restore, but also continue to meet NCHRP 350 without refurbishment. Despite these test results Energy still recommends unit inspections after impacts and refurbishment as needed and does not suggest the REACT is maintenance free.

IV. TEST CRITERIA

The REACT 350 (36") Nine Row System shall have been fully tested per the recommended criteria set forth in the National Cooperative Highway Research Program (NCHRP) Report 350, 1993, Test Level 3 for re-directive, non-gating terminals and crash cushions.

V. DESIGN AND SELECTION CRITERIA

A. Design, selection and placement of crash cushions shall conform to The American Association of State and Highway and Transportation Officials (AASHTO) Publication, "Roadside Design Guide" 1996.

B. Installation of REACT 350 (36") Systems shall be accomplished in accordance with the recommendations of Energy Absorption Systems, Inc.

REACT 350®

Reusable Energy Absorbing Crash Terminal

❶ HMW/HDPE Cylinders

❷ Redirective Cable

❸ Simple Anchorage

❹ Directional, Reflective Nose

❺ Backup

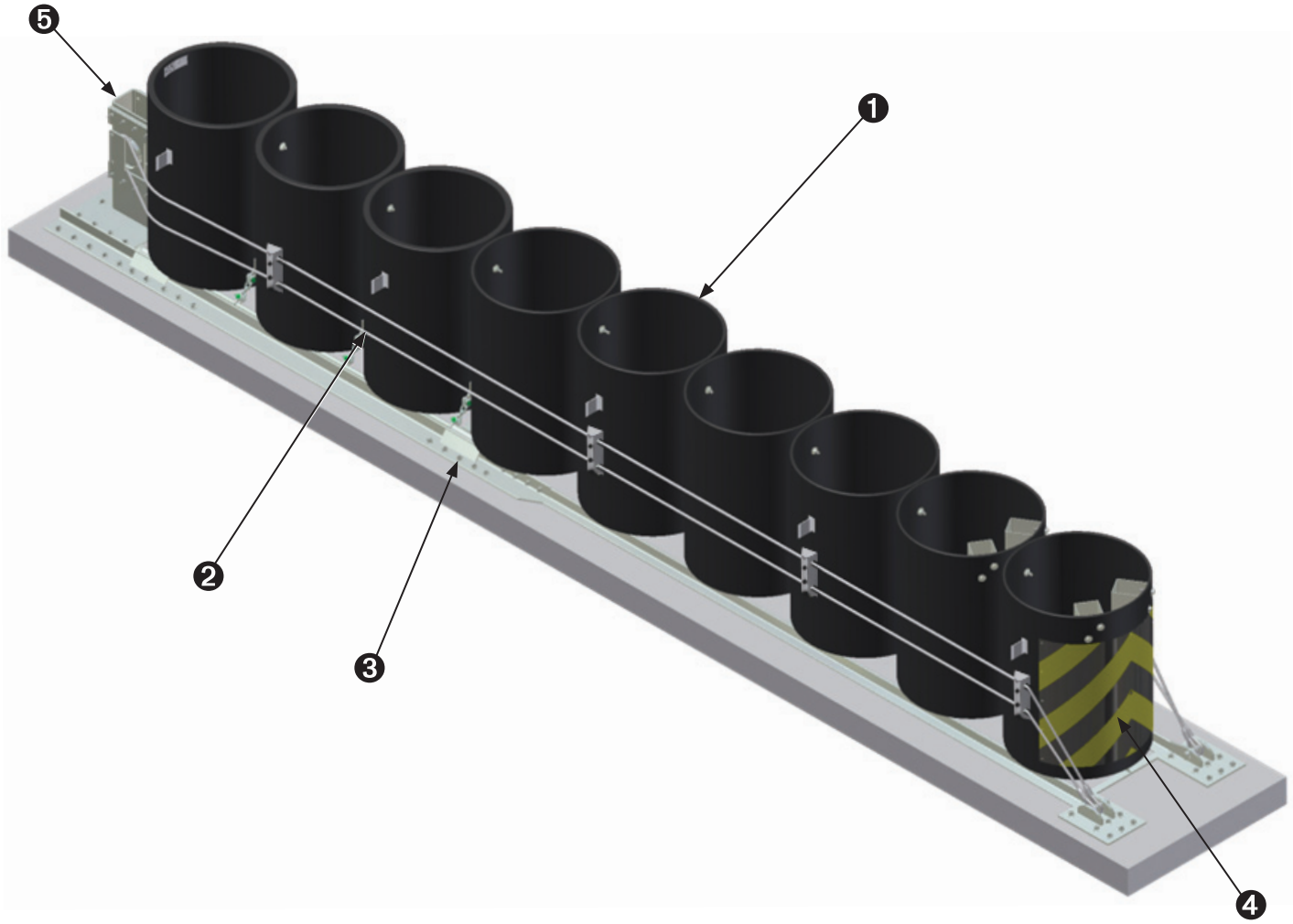

SCI Products Inc.

The World's Only

Speed-Dependent

Crash Attenuators.

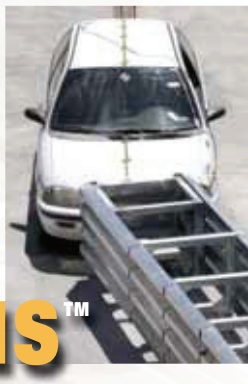

SMART CUSHION INNOVATIONS™

NCHRP 350 Approved

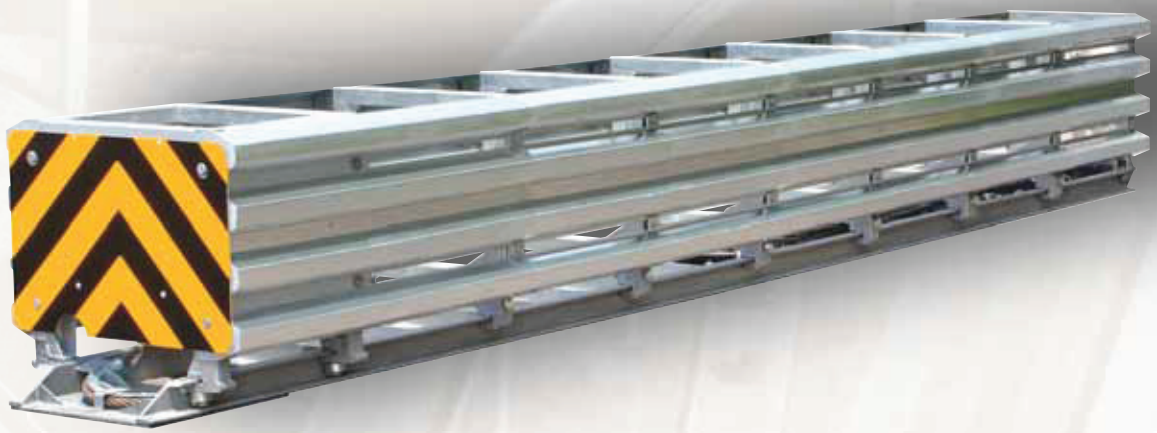

Marketed and Distributed by

Work Area Protection

SMART CUSHION INNOVATIONS™

The World's Only Speed-Dependent Crash Attenuators

The Smart Cushion Innovations (SCI) crash attenuator is a revolutionary, speed-dependent product that varies stopping resistance during an impact. The Smart Cushion Innovations (SCI) crash attenuator allows lighter and slower-moving vehicles to have longer ridedown distances and lower ridedown G forces.

Unlike fixed-resistance attenuators, the Smart Cushion Innovations (SCI) attenuator does not reach maximum stopping resistance unless a vehicle is traveling at the maximum design speed. This fully redirective, non-gating, bi-directional, impact attenuator was designed for maximum safety and reusability, as well as outstanding durability before, during and after an impact.

The SCI is the only attenuator with a reverse-tapered design to eliminate side panel stress during a collapse. It also has an extremely low angle of exit on side impacts (<1°) to keep vehicles from rebounding back into traffic and causing secondary accidents. This is the lowest angle of exit for any redirective attenuator on the market.

How It Works

The hydraulic porting of the attenuator ensures that the proper resistance is used to stop the vehicle before it reaches the end of the cushion's usable length.

The SCI was specifically designed for durability and resetability to enable resets to be performed in less than one hour. After a frontal impact, an experienced crew can perform the two-stage reset in less than 45 minutes. Side impacts within NCHRP 350 specifications should not damage the attenuator.

After an impact, the cushion requires a dual-stage pull-out with the replacement of two 1/4" shear bolts. The crash attenuator requires a minimal inventory of spare parts because of the new side panels' durability and the normal requirement of only two shear bolts on the frontal impact reset. Minimal damage means quick resetting and reduced worker exposure to traffic, as well as lower costs for traffic control, replacement parts and labor.

Ready To Install

SCI attenuators come fully assembled for a pick-and-set install. A typical installation can be performed in less than 1-1/2 hours. The units require no backstops for permanent or temporary construction applications.

NCHRP 350 Test Results

All NCHRP 350 tests were performed on the same unit in four consecutive days. All tests showed outstanding results for ridedown G forces and low angle of exit. There were no replacement parts required prior to the next test except for shear bolts.

"It's a very easy installation. We set the SCI impact attenuator with a truck-mounted crane, drove into the concrete surfacing and then did some epoxy work. The installation went real well and took about an hour. It would normally take longer for a different type of system. SCI manufactures a quality product and I'm sure they save many lives."

— Tyler Chicoine, Garcia-Chicoine Enterprises Inc., Lincoln, Nebraska

Repair Costs

Based on NCHRP 350 Test results, the **SCI**100GM required the following parts and labor:

NCHRP 350 TEST LEVEL III REPAIR RESULTS	Part Names	Cost	Repair Hrs.	Cost	Total Cost
#3-31 2000 kg vehicle 0 degree frontal impact at 102 km/h	2 – Shear Bolts	$1	2 man hours	$80	$81
#3-32 820 kg vehicle 15 degree frontal impact at 101 km/h	2 - Shear Bolts	$1	2 man hours	$80	$81
#3-33 2000 kg vehicle 15 degree frontal impact at 101 km/h	2 - Shear Bolts	$1	2 man hours	$80	$81
#3-37 2000 kg vehicle 20 degree side impact at 99 km/h	0	$0	0	$0	$0
#3-39 2000 kg vehicle 20 degree rev. side impact at 99 km/h	0	$0	0	$0	$0

Test Levels Available

The **SCI**70GM is our Test Level 2 (45 MPH) attenuator and the **SCI**100GM is our Test Level 3 (62 MPH) attenuator. Both attenuators can protect a wide range of hazards including bridges, median barriers and highway signs.

reusability.

The first speed-dependent, variable-resistance attenuator that can ramp resistance up or down to provide the smoothest ridedown of any system on the market.

*"The **SCI**100GM unit has experienced three hits in a very short period. The first was well above the NCHRP 350 criteria. The crash used every bit of the capacity the unit has and I believe the driver survived because of the performance of the unit in extreme circumstances. The next two hits were within the NCHRP 350 criteria and the unit functioned as designed with very little repair cost. As we gain experience in resetting units, the job can be accomplished in less than 30 minutes for a majority of hits. Damage to the unit for the last two hits was limited to the shear pins and the chevron plate."*

— Ron Jones, Trafficade Services Inc., Phoenix, Arizona

Features

Support Gussets.
Gussets located behind the panels reduce gap formation and deformation to prevent snagging on reverse side impacts.

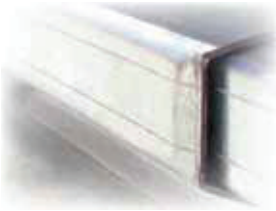

Stronger Side Panel.
Our panels are over 90% stronger than curved profiles. The profile allows the edges to be beveled, reducing the potential for snagging and damage on reverse-direction impacts. The panel also smoothly redirects vehicles on side impacts. The side panel is fabricated from 10-gauge, 60-ksi, minimum-yield steel with a G90 galvanized coating.

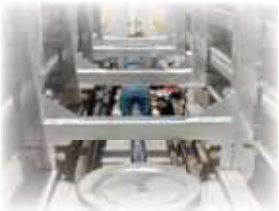

Cable & Cylinder System.
This system allows longer ridedown distances for smaller vehicles, as well as smoother ridedown with lower G forces for all vehicles. The cylinder's hydraulic porting assures a controlled ridedown by applying the necessary resistance required based on the speed of the vehicle.

Side Guide Design.
This new design withstands side impacts with no damage. It also allows individual replacement of the support frames.

Front Rollers.
The roller guide design on the front sled produces a smooth, aligned collapse by reducing friction and binding.

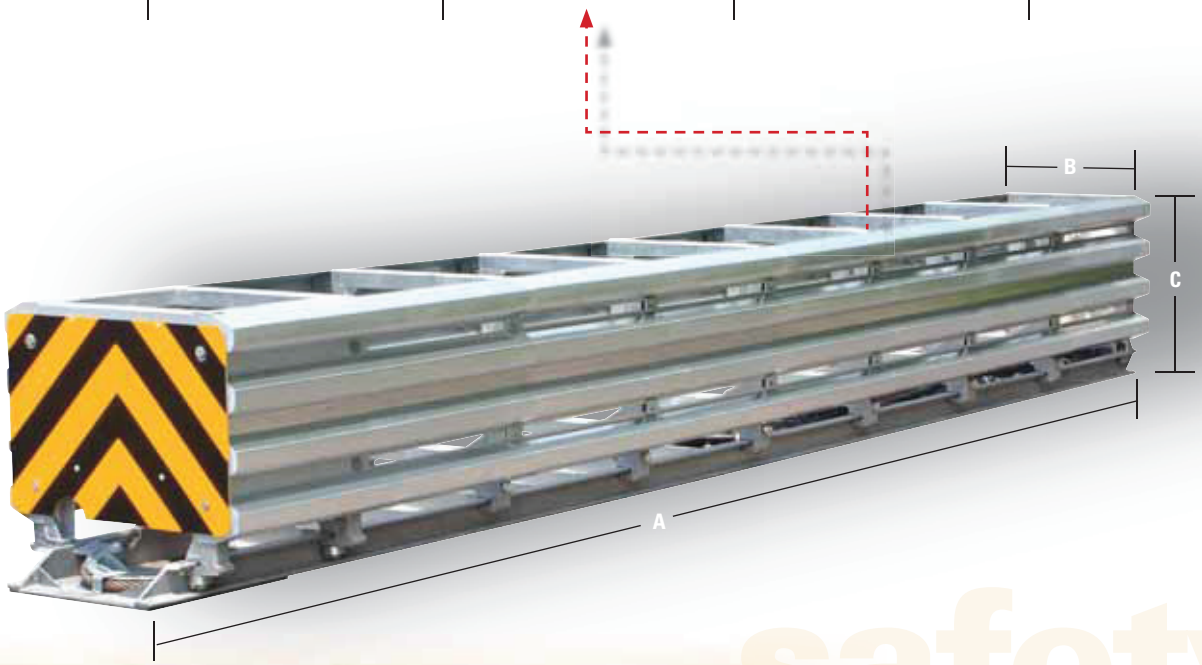

SCI Dimensions	Test Level 2	Test Level 3
A	13′ 6″	21′ 6″
B	24″	24″
C	34″	34″
Weight	2470 lbs.	3450 lbs.

Weights are for attenuators only

SMART CUSHION INNOVATIONS™

Highlights

Safety Benefits

- Variable force (speed-dependent), not fixed force, provides consistent deceleration during ridedown.
- Longer ridedown distances and lower sustained G forces for lighter or slower-moving vehicles.
- Low angle of exit on side impacts (<1°) to keep vehicle from deflecting back into traffic.
- Quick and easy resetting for reduced worker exposure to traffic.
- Reduced out-of-service time to maximize highway safety.

Cost Benefits

- Minimal replacement parts requirement reduces spare parts inventory and parts costs.
- Quick, easy resetting reduces labor and traffic control costs.
- The new, reverse-tapered design eliminates side panel stress on frontal impacts to reduce damage and system fatigue from multiple impacts.
- Low life cycle cost benefits increase dramatically as impacts occur.

About Work Area Protection Corporation

Work Area Protection Corporation is the international leader in traffic control devices and work zone safety products. Since 1969, we have been meeting customer needs and exceeding quality standards with a wide range of highway and construction safety products. We back those products with knowledgeable, personalized customer service and strong distributor support.

Part No.	Description	Weight
Attenuators		
9400	**SCI**100GM Attenuator 24" wide w/Concrete Anchors Test Level 3	3500 lbs.
9450	**SCI**100GM Attenuator 24" wide w/Asphalt Anchors Test Level 3	3575 lbs.
9451	**SCI**70GM Attenuator 24" wide w/Concrete Anchors Test Level 2	2500 lbs.
9452	**SCI**70GM Attenuator 24" wide w/Asphalt Anchors Test Level 2	2550 lbs.
Anchor Kits		
9401	Concrete Anchor Kit for **SCI**100GM	
9402	Asphalt Anchor Kit for **SCI**100GM	
9453	Concrete Anchor Kit for **SCI**70GM	
9454	Asphalt Anchor Kit for **SCI**70GM	
Accessories		
9406	Shear Bolt	
9424	Delineator Panel Yellow Test Level 3	
9456	Delineator Panel Yellow Test Level 2	
9439	Epoxy 22 oz. Cartridge Required for Attenuator Part No. 9400=4/9450=12/9451=3/9452=9	
9440	Nozzle Epoxy Mixing – 1 nozzle required per cartridge	
9444	Spare Parts Kit Test Level 3	
9458	Spare Parts Kit Test Level 2	
Transitions		
9431	Transition 24" Jersey Barrier - Right (viewed from front)	
9432	Transition 24" Jersey Barrier - Left (viewed from front)	
9433	Transition 24" Concrete - Left & Right	

Call for other transition design availability

Transition 24" Jersey Barrier

Transition 24" Concrete

Disclaimer
This product is only intended for use as a redirective impact attenuator. Installations must be performed according to manufacturer's specification. Improper installations, modifications or unintended use creates a hazardous condition that can cause personal injury, property damage or death. Any modification or unintended use of this product shall immediately void all manufacturers' warranties. SCI Products Inc. disclaims all liability for injuries to persons or property resulting from any modifications to, unintended use of or unspecified installation of this product.

Designs are subject to change without notice.
SMART CUSHION INNOVATIONS is a trademark of SCI Products Inc.
PATENT PENDING.

SCI Products Inc.

Permanent Message Boards • Attenuators • Speed Awareness Products • LED Signals • Advanced Warners

Work Area Protection Corp.
P.O. Box 4087 • 2500 Production Drive • St. Charles, IL 60174-9081
Phone: 630.377.9100 • **Orders: 800.327.4417** • Fax: 630.377.9270
Web: www.workareaprotection.com

Member ATSSA

Distributed by:

©2005 SCI Products Inc.

APPENDIX C - SMART CUSHION®, TEST LEVEL 2

PARTS LIST

01 - Front Sled
02 - Cable Assembly
05 - Sled Panel
07 - Terminal Brace
09 - Anchor Bolts
12 - Side Panels
14 - Mobile Sheave Assembly
17 - Cable Adjuster Bolt
18-20 - Mobile Frames 4-6
26 - Cylinder
27 - Rear Panel
06, 08, 29 - Side Keepers

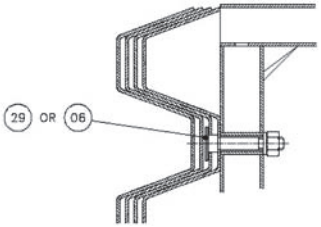

DETAIL A

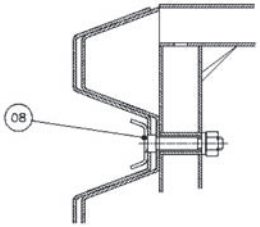

DETAIL B

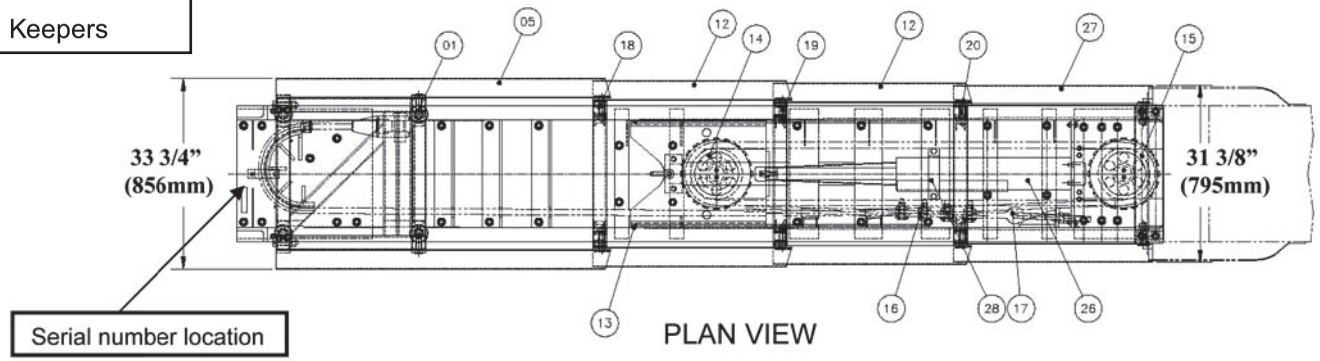

PLAN VIEW

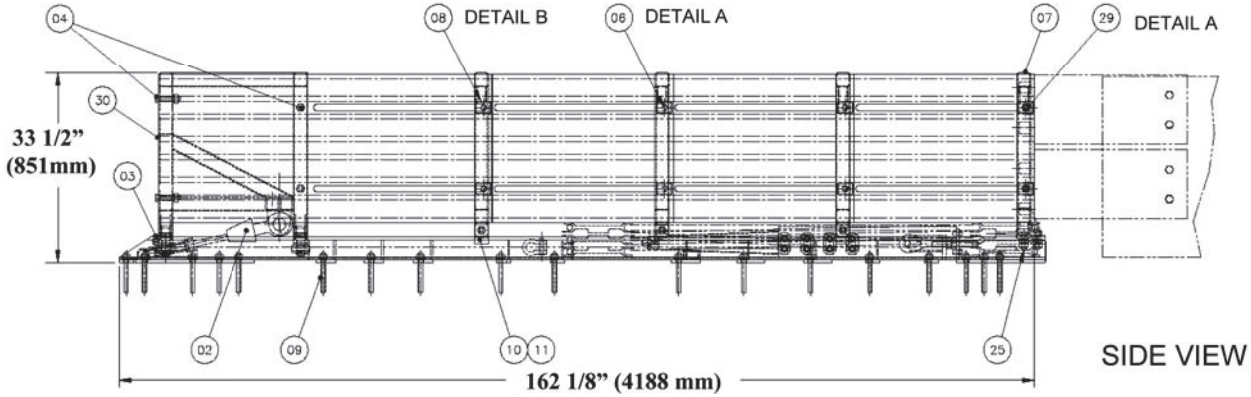

SIDE VIEW

APPENDIX D - SMART CUSHION®, TEST LEVEL 3

PARTS LIST

01 - Front Sled
02 - Cable Assembly
05 - Sled Panel
07 - Terminal Brace
09 - Anchor Bolts
12 - Side Panels
14 - Mobile Sheave Assembly
17 - Cable Adjuster Bolt
18-23 - Mobile Frames 1-6
26 - Cylinder
27 - Rear Panel
06, 08, 29 - Side Keepers

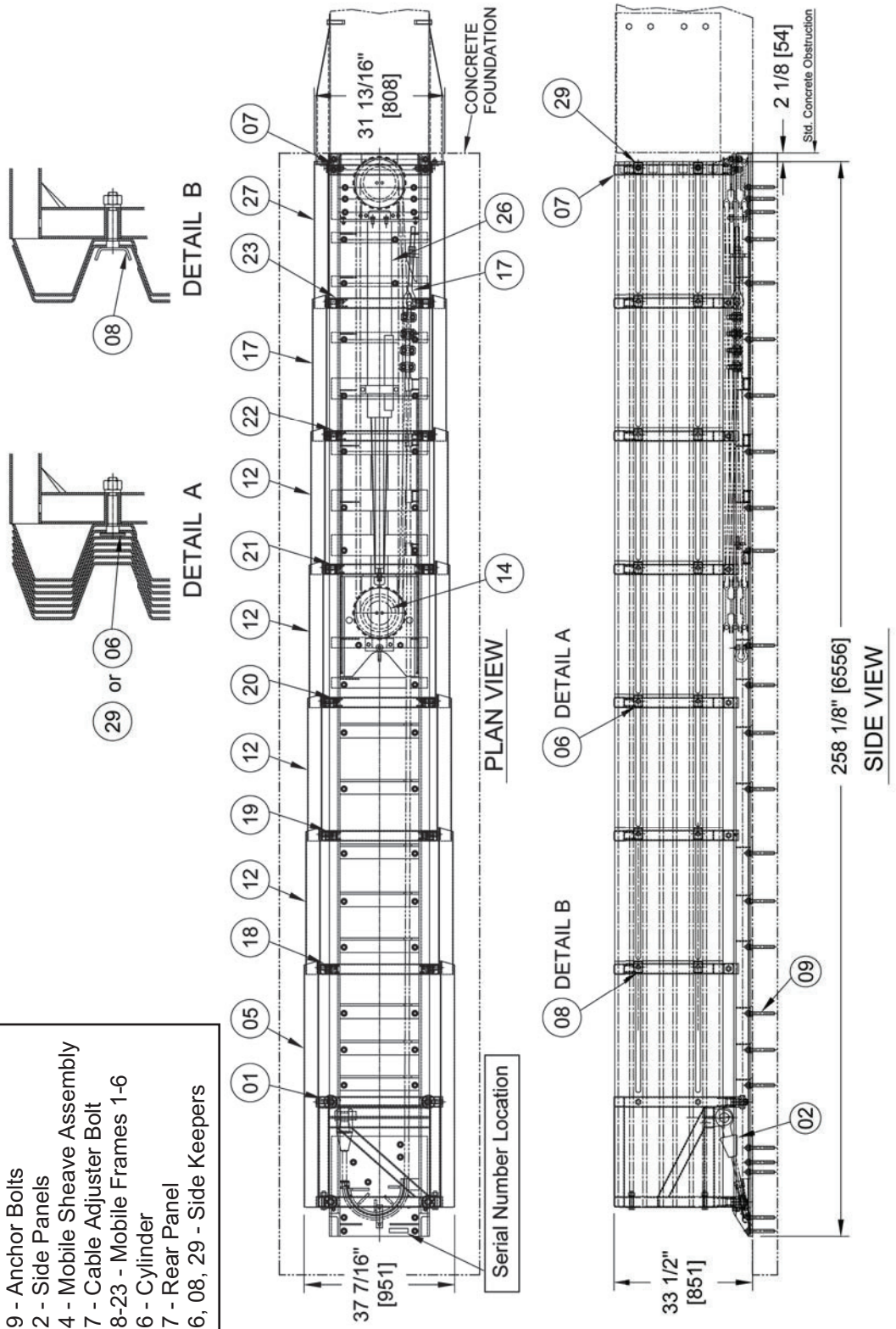

APPENDIX E1 - TEST LEVEL 2 FOUNDATION

Cross Slope at Top Surface not to Exceed 1 in 10
Foundation must be a Level Plane

* * * * * Wide Hazards and Transitions may require the foundation to be longer. See Transition Drawings.

SPECIFICATIONS

All reinforcing steel - straight #4 ASTM-A36

Embedment requirements:

- 6" reinforced concrete pad with anchor embedment of 5 1/2"
- 8" non-reinforced concrete pad with anchor embedment of 5 1/2"
- 3" asphalt over 3" concrete with anchor embedment of 16 1/2"
- 6" asphalt over 6" of compacted subbase with anchor embedment of 16 1/2"
- 8" asphalt with anchor embedment of 16 1/2"

The contractor shall furnish a certification for material installed to the following requirements:

- 6" reinforced concrete (PCC) sampling per ASTM C31-84, testing per ASTM C39-84
- 8" non-reinforced concrete (PCC) sampling per ASTM C31-84, testing per ASTM 39-84
- 3" asphalt over 3" concrete - Type SP 12.5 Level C or higher
- 6" asphalt over 6" of compacted subbase - same as above
- 8" asphalt (AC) - Type SP 12.5 Traffic Level C or higher

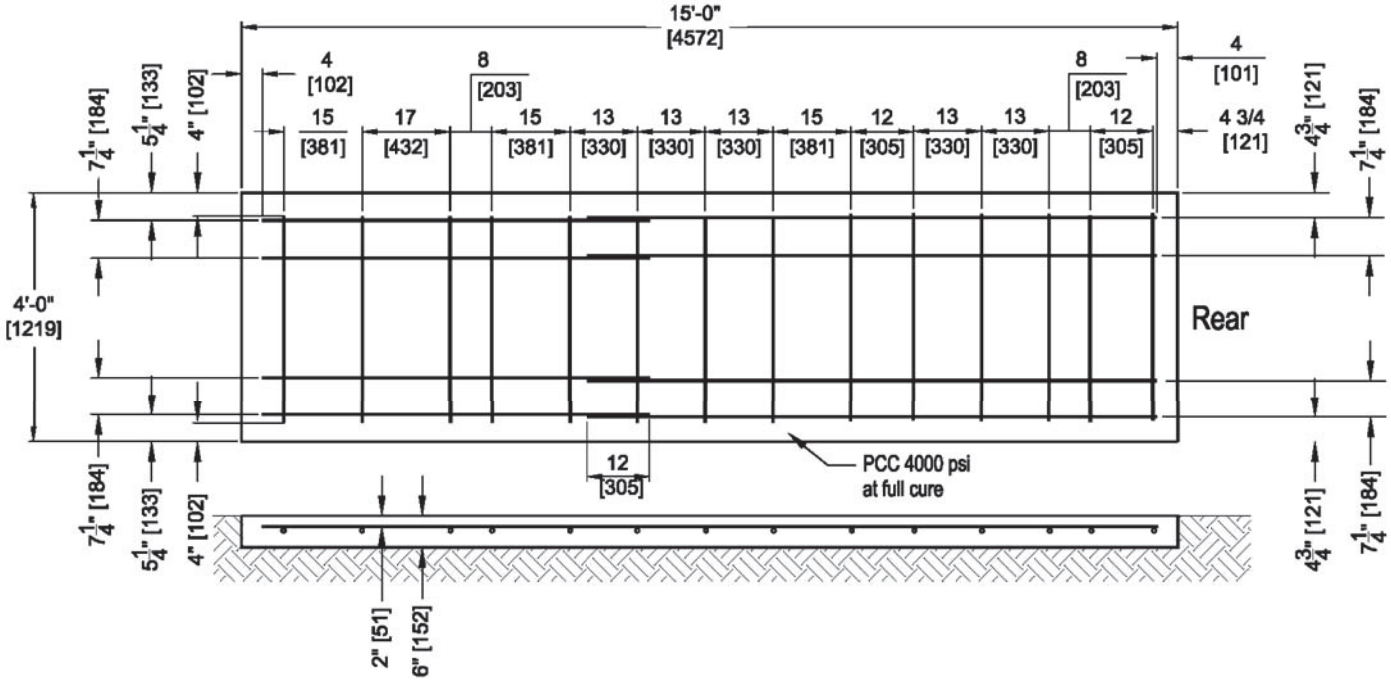

SCI70GM
Level 2 System

APPENDIX E2 - TEST LEVEL 3 FOUNDATION

Cross Slope at Top Surface not to Exceed 1 in 10
Foundation must be a Level Plane

* * * * * Wide Hazards and Transitions may require the foundation to be longer. See Transition Drawings.

SPECIFICATIONS

All reinforcing steel - straight #4 ASTM-A36

Embedment requirements:

- 6" reinforced concrete pad with anchor embedment of 5 1/2"
- 8" non-reinforced concrete pad with anchor embedment of 5 1/2"
- 3" asphalt over 3" concrete with anchor embedment of 16 1/2"
- 6" asphalt over 6" of compacted subbase with anchor embedment of 16 1/2"
- 8" asphalt with anchor embedment of 16 1/2"

The contractor shall furnish a certification for material installed to the following requirements:

- 6" reinforced concrete (PCC) sampling per ASTM C31-84, testing per ASTM C39-84
- 8" non-reinforced concrete (PCC) sampling per ASTM C31-84, testing per ASTM 39-84
- 3" asphalt over 3" concrete - Type SP 12.5 Level C or higher
- 6" asphalt over 6" of compacted subbase - same as above
- 8" asphalt (AC) - Type SP 12.5 Traffic Level C or higher

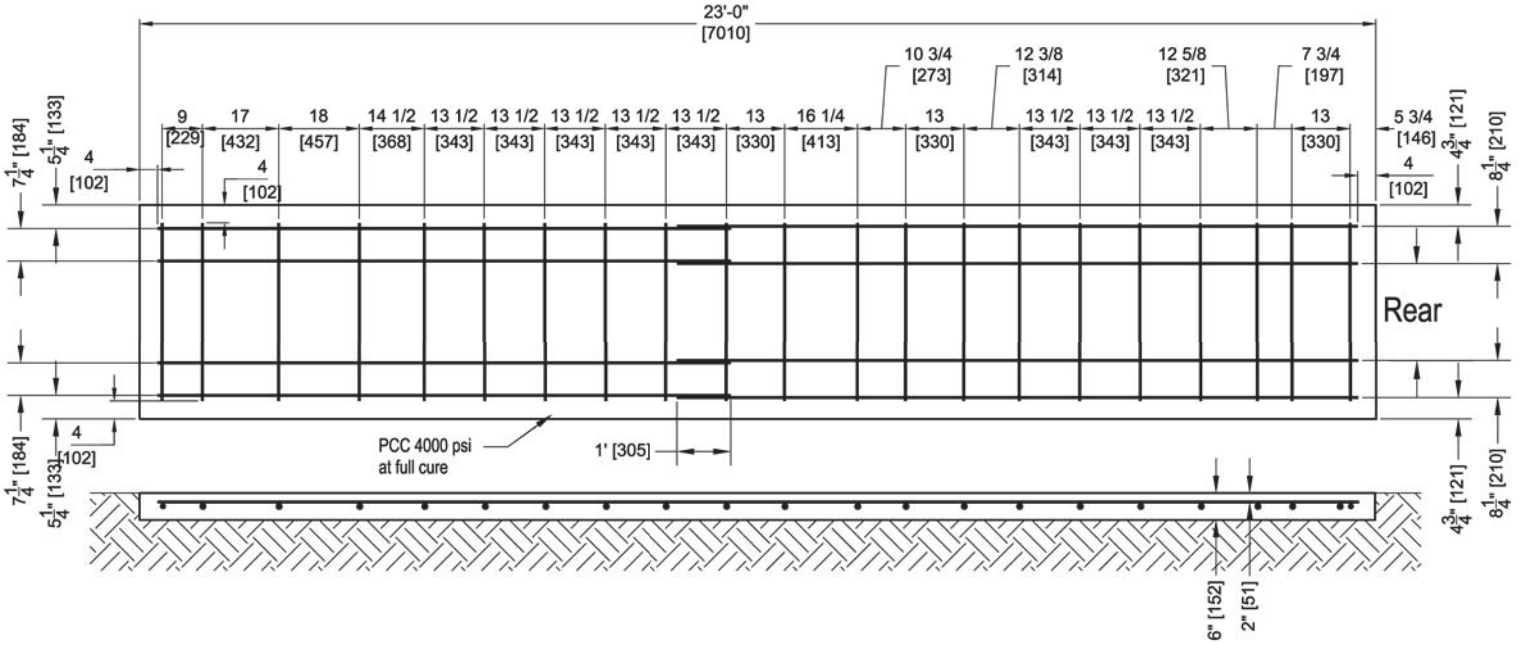

SCI100GM
Level 3 System

APPENDIX F - TRANSITION, GORE ASSEMBLY

PARTS LIST

Gore Assembly #9475
01 - Transition 10 Degree Flare Right #9467
01 - Transition 10 Degree Flare Left #9468
02 - Transition Concrete Spanner Brace #9469
03 - Transition Concrete #1 Spanner Brace #9470
04 - Transition Gore Tapered #1 Spanner Brace #9472
05 - Transition Gore Tapered #2 Spanner Brace #9473
06 - Thrie Beam Concrete Leg Brace #9474
07 - Thrie Beam Blockout (AASHTO PWB02)

***** SPLICE BOLTS AND GUARDRAIL SUPPLIED BY OTHERS*****

NOTES:
1) DIMENSIONS SHOWN ARE FOR 60" WIDTH
2) FOR EACH 1" OF WIDTH CHANGE, ADD OR SUBTRACT THE FOLLOWIING:
   2.88" [73.15mm] TO LENGTH OF GUARDRAIL
   2.84" [72.13mm] TO OVERAL LENGTH
3) ADD OR SUBTRACT ADDITIONAL POST ON EACH SIDE FOR EACH 13" [330mm] CHANGE IN WIDTH.
4) GUARDRAIL TERMINATION - YOU MUST ADD THE GUARDRAIL OVERLAP LENGTH AND TERMINATE PER STATE REGULATIONS.

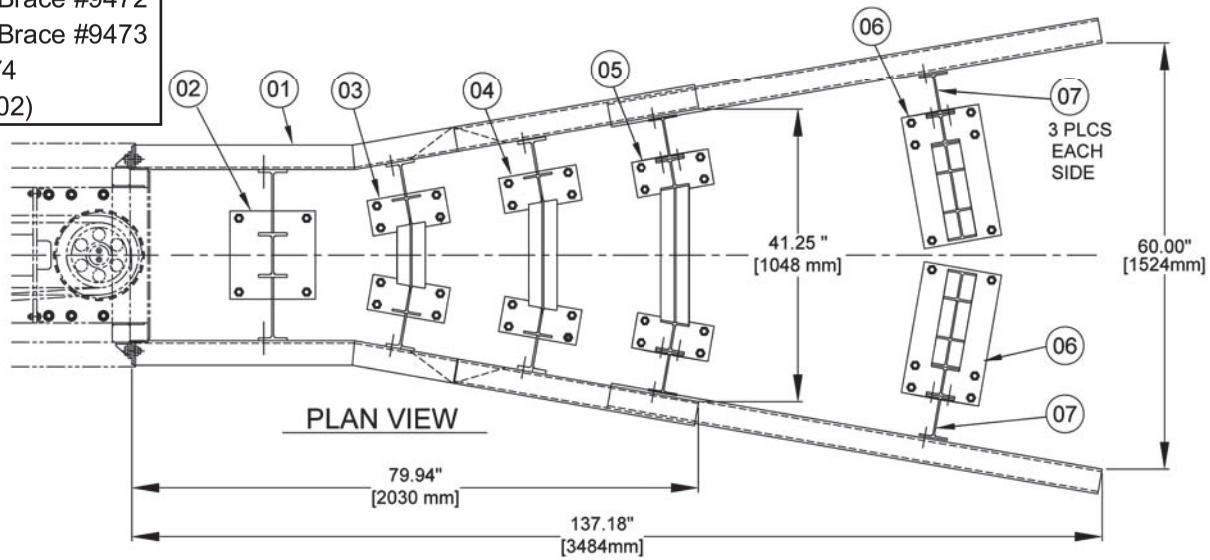

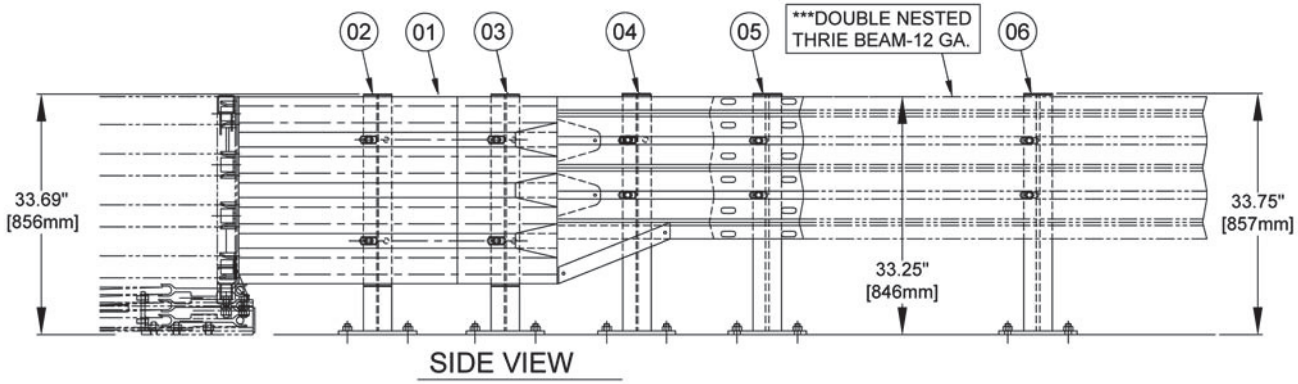

The use of the last brace will be determined by whether the Thrie Beam can be attached to the obstruction or not. If the Thrie Beam distance from the last brace is 40 inches or less and can be attached, you will not need a brace at the obstruction. If you cannot attach to the obstruction, you may need a brace and drill holes in the Thrie Beam at the furthest rearward location.

APPENDIX F(2) - TRANSITION. GORE ASSEMBLY

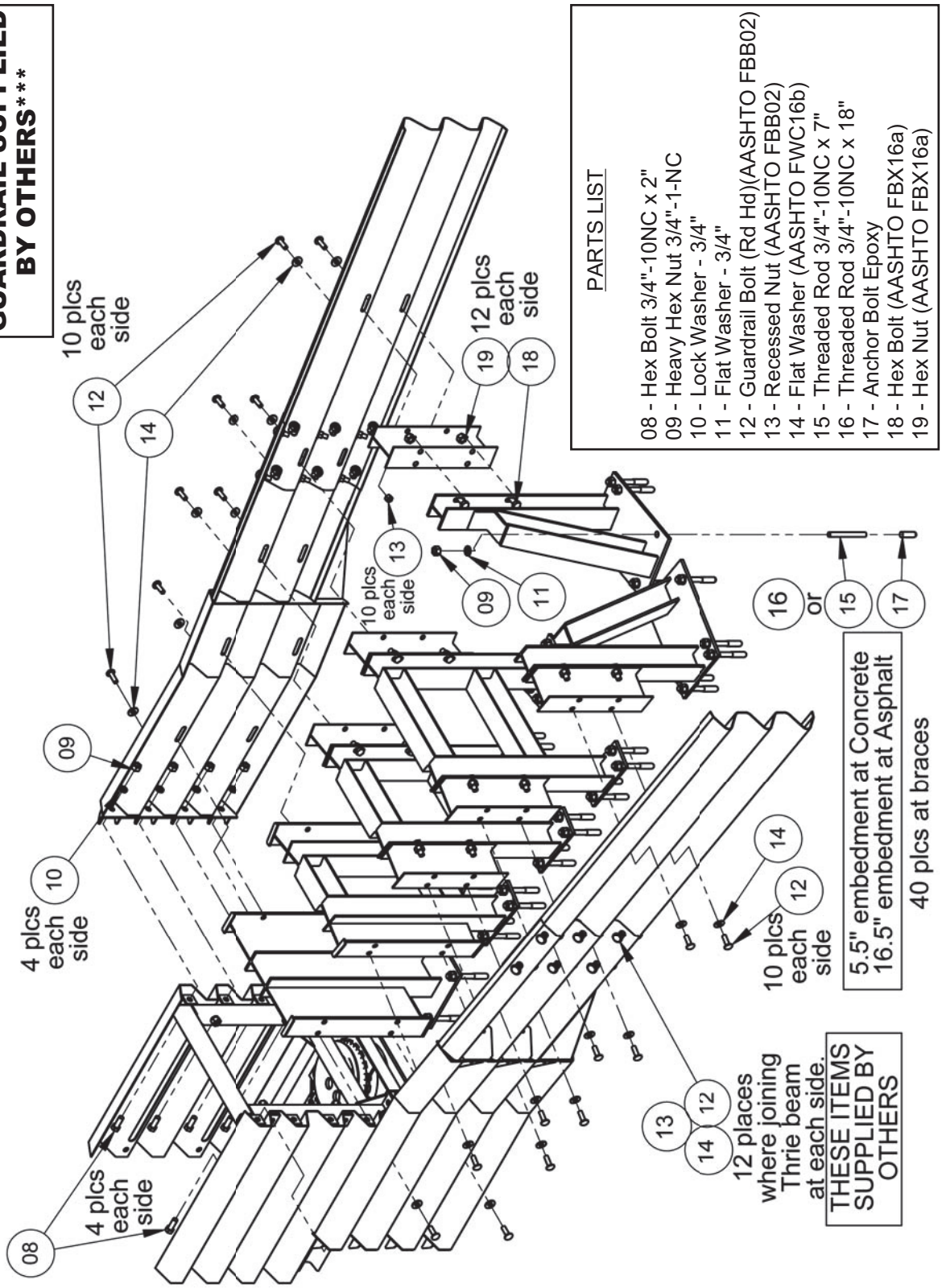

APPENDIX F(3) - TRANSITION. GORE ASSEMBLY CALCULATIONS

SCI GM WIDE TRANSITION CALCULATIONS

Guardrail

12.6" Splice overlap at Transition end

Must add length for barrier overlap and end termination per state specifications

Longitudinal distance increases 2.84" for each 1" increase in width

Thrie Beam Length increases 2.88" for each 1" increase in width

Gore Width Inches	Additional Long. Distance Inches	Additional Long. Distance Feet	Thrie Beam Length Inches	Overall System Length Feet	Additional Brace Count
41	79.2	6.6	12.6	28.1	All 4 Spanner Braces # 9469, 9470, 9472, 9473
48	99.1	8.3	32.8	29.8	All 4 Spanner Braces # 9469, 9470, 9472, 9473
55	118.9	9.9	52.9	31.4	Add 2-Thrie Beam Concrete Leg Brace #9474
60	133.1	11.1	67.3	32.6	Add 2-Thrie Beam Concrete Leg Brace #9474
68	155.8	13.0	90.4	34.5	Add 4-Thrie Beam Concrete Leg Brace #9474
69	158.6	13.2	93.2	34.7	Add 4-Thrie Beam Concrete Leg Brace #9474
81	192.7	16.1	127.8	37.6	Add 6-Thrie Beam Concrete Leg Brace #9474
88	212.5	17.7	148.0	39.2	Add 6-Thrie Beam Concrete Leg Brace #9474
94	229.5	19.1	165.2	40.6	Add 8-Thrie Beam Concrete Leg Brace #9474
100	246.5	20.5	182.5	42.1	Add 8-Thrie Beam Concrete Leg Brace #9474
107	266.4	22.2	202.7	43.7	Add 10-Thrie Beam Concrete Leg Brace #9474
112	280.6	23.4	217.1	44.9	Add 10-Thrie Beam Concrete Leg Brace #9474
120	303.3	25.3	240.1	46.8	Add 12-Thrie Beam Concrete Leg Brace #9474
126	320.3	26.7	257.4	48.2	Add 12-Thrie Beam Concrete Leg Brace #9474
133	340.1	28.3	277.6	49.9	Add 14-Thrie Beam Concrete Leg Brace #9474

APPENDIX G - TRANSITION, JERSEY/F SHAPE BARRIER

PARTS LIST

01 - Transition Jersey Barrier Right #9431
02 - Transition Jersey Barrier Left #9432

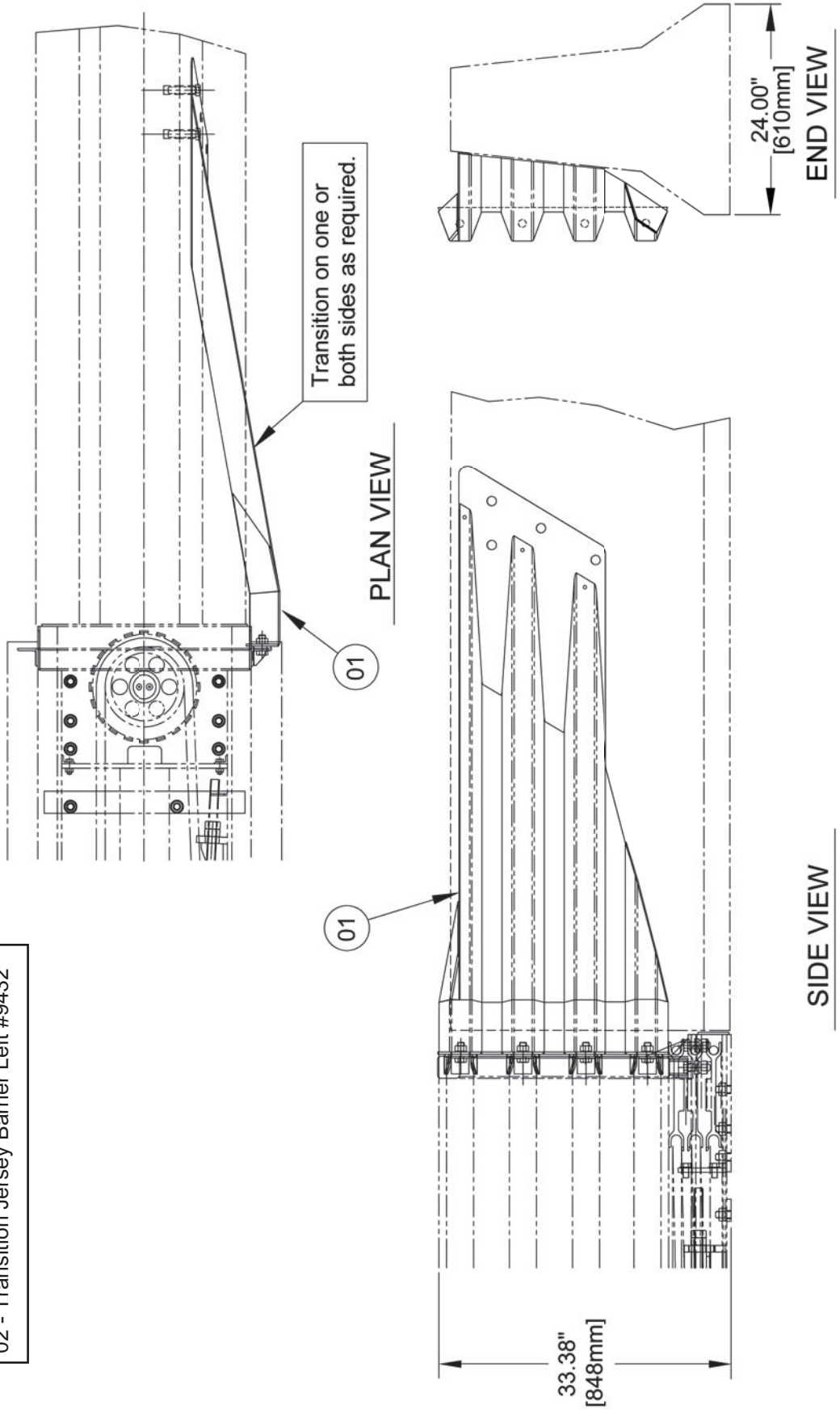

APPENDIX G(2) - TRANSITION, JERSEY/F SHAPE BARRIER

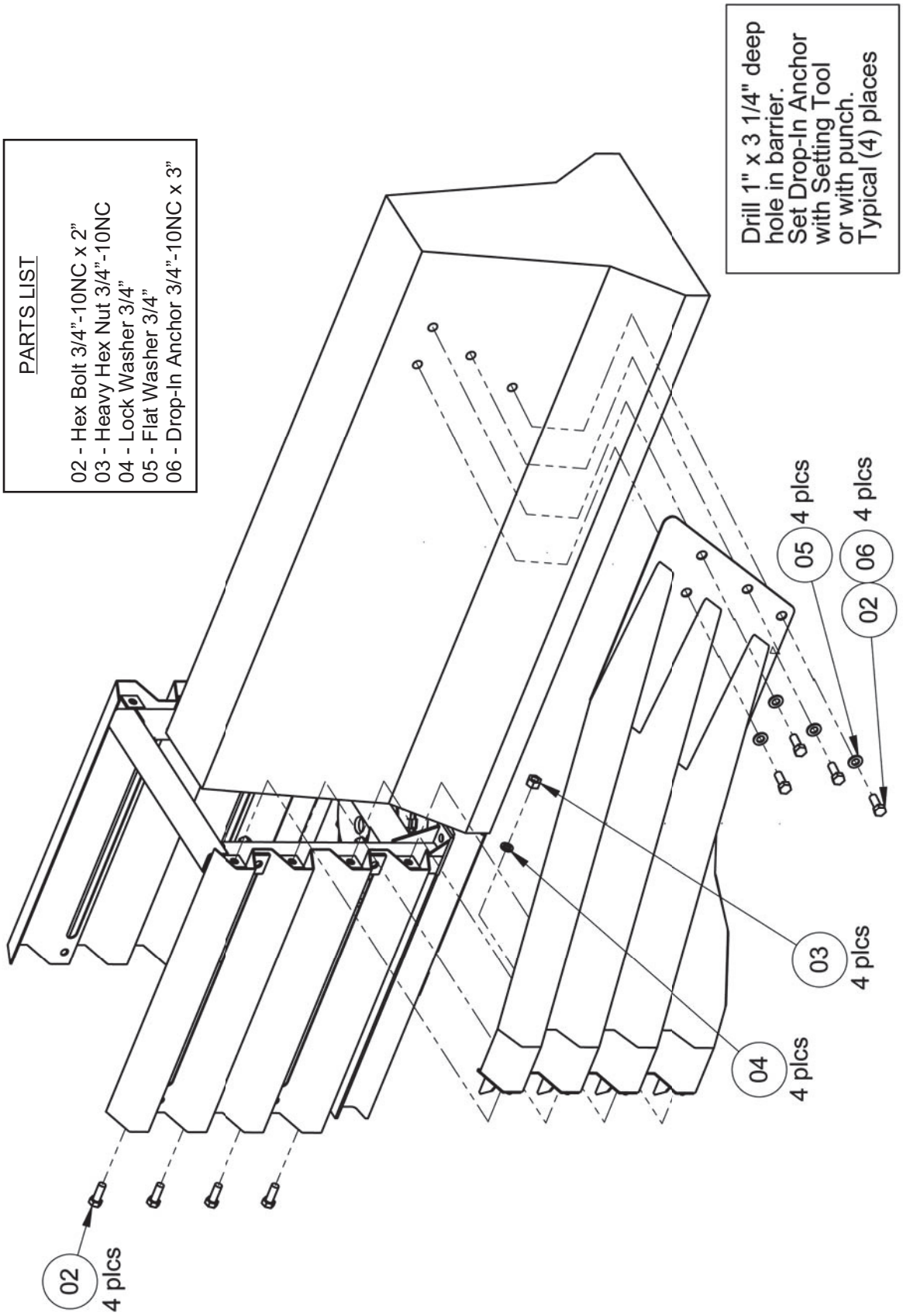

APPENDIX H - TRANSITION, CONCRETE BLOCK, 24 INCH (610mm)

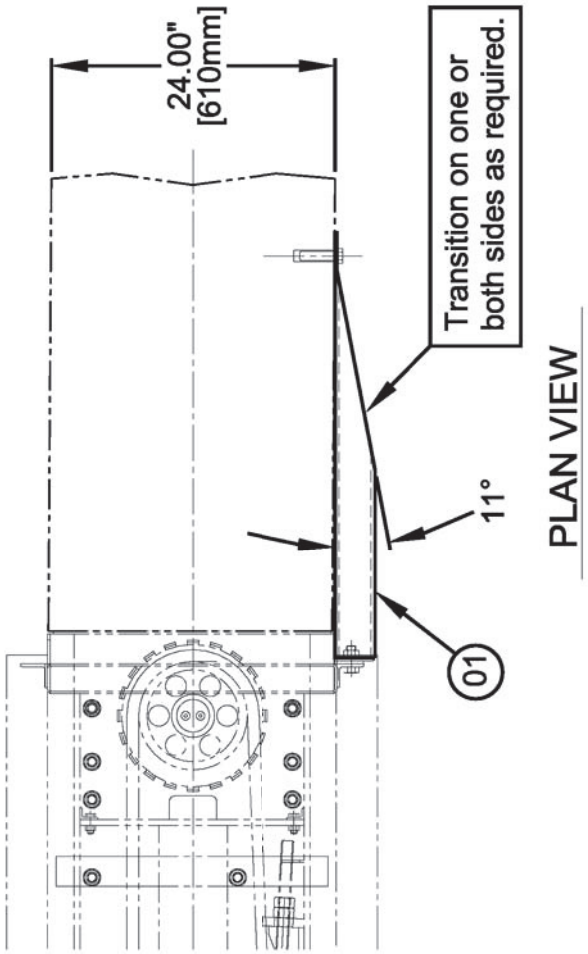

PLAN VIEW

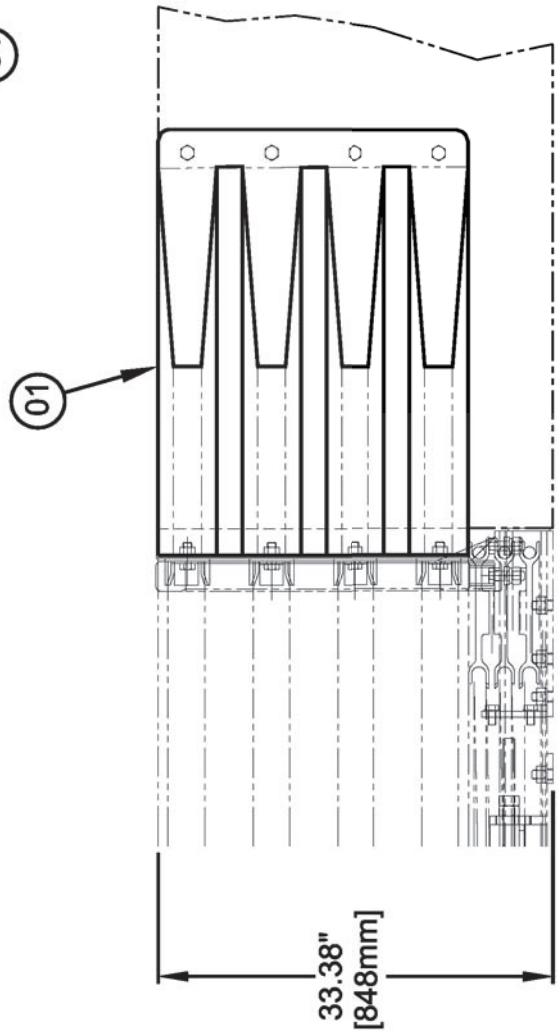

SIDE VIEW

PARTS LIST

01 - Transition Concrete Block Right or Left #9433

APPENDIX H(2) - TRANSITION, CONCRETE BLOCK, 24 INCH (610mm)

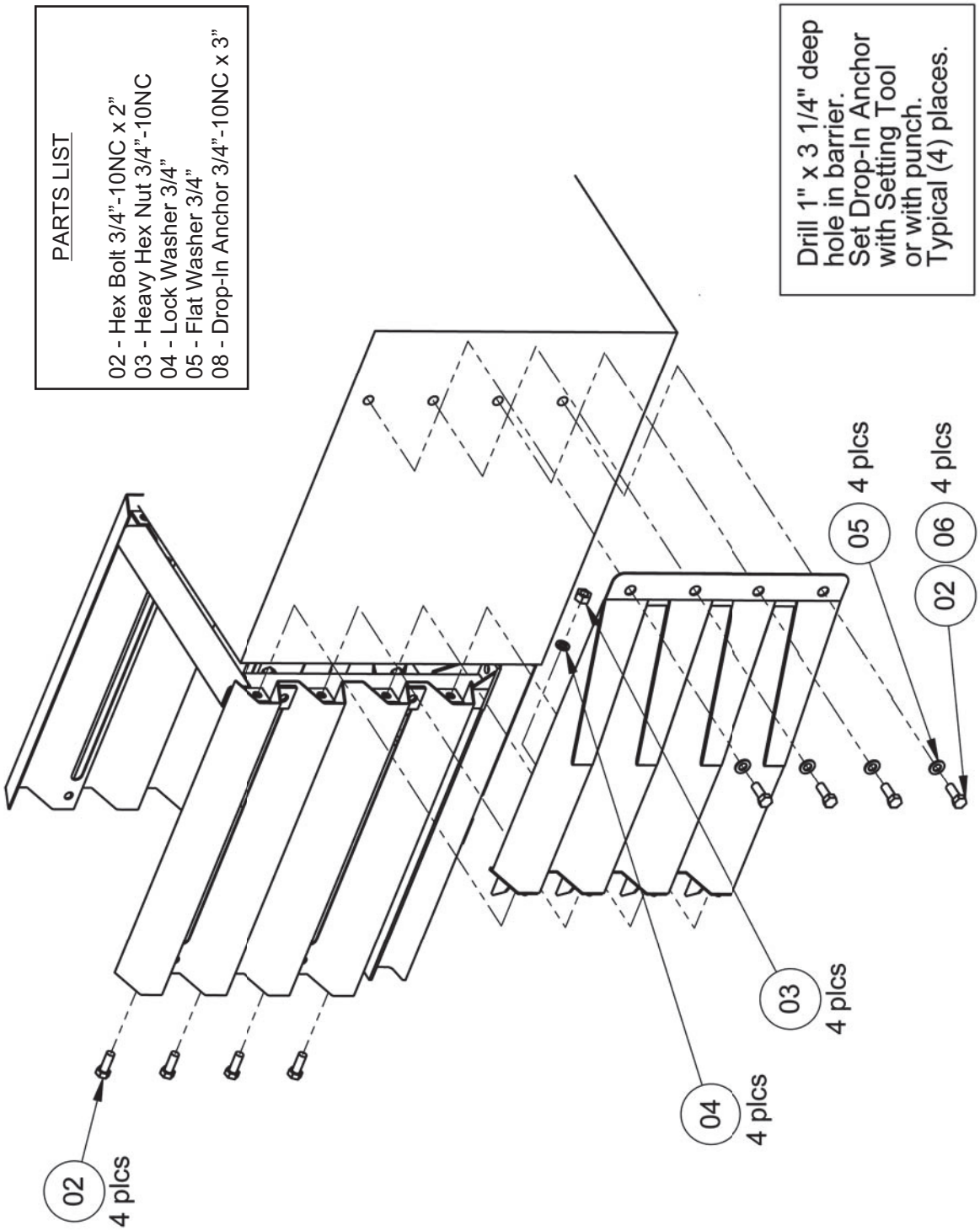

APPENDIX I - TRANSITION, CONCRETE BLOCK, 30 INCH (762mm)

PARTS LIST

Two Sided Full Assembly #9459
01 - Transition 30" Concrete Straight Connection #9463
02 - Transition Concrete Spanner Brace #9469

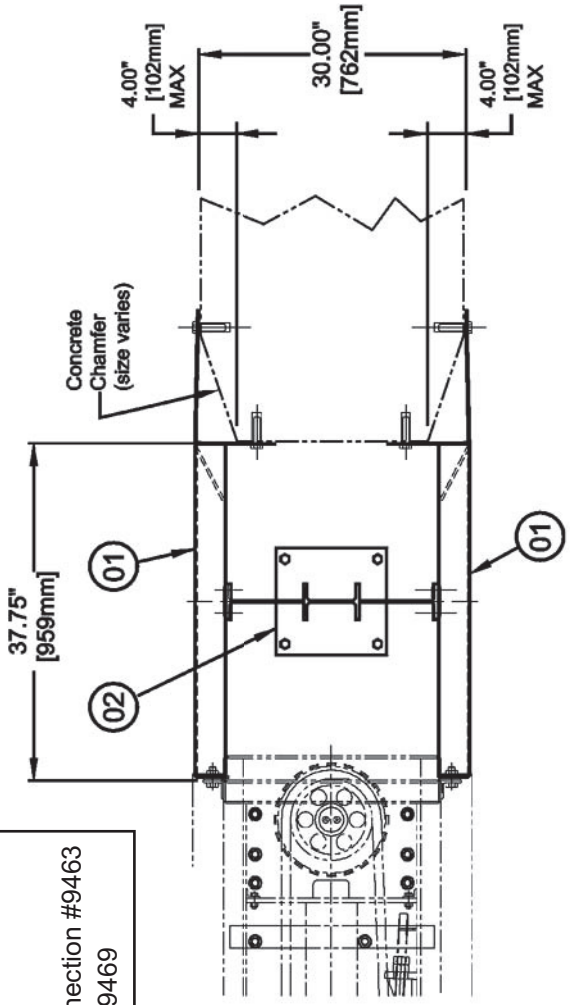

USED FOR:
1. Unchamfered Concrete Block
2. Chamfered Concrete Block ***
*** Chamfer limited to <4"

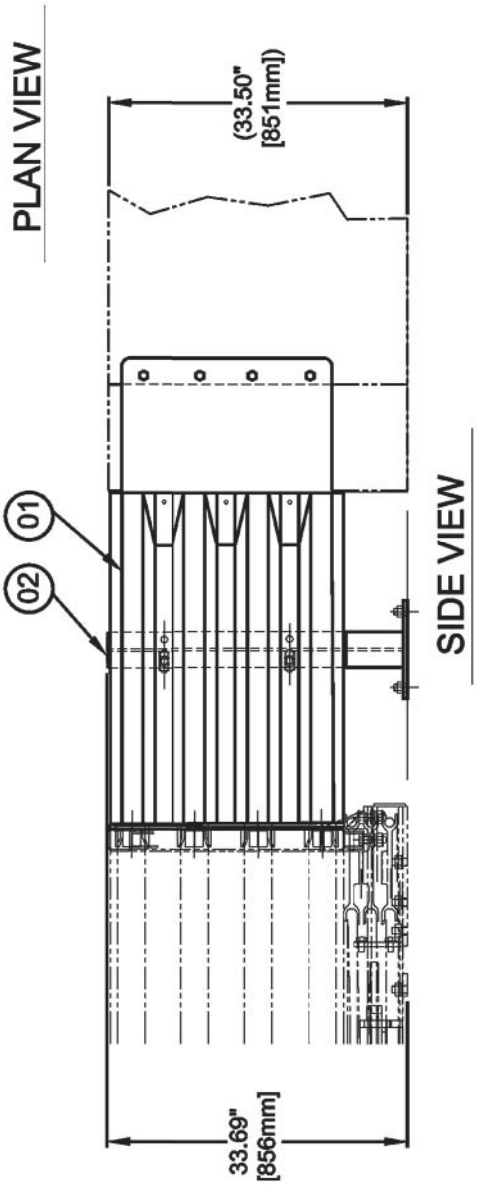

APPENDIX I(2) - TRANSITION, CONCRETE BLOCK, 30 INCH (762mm)

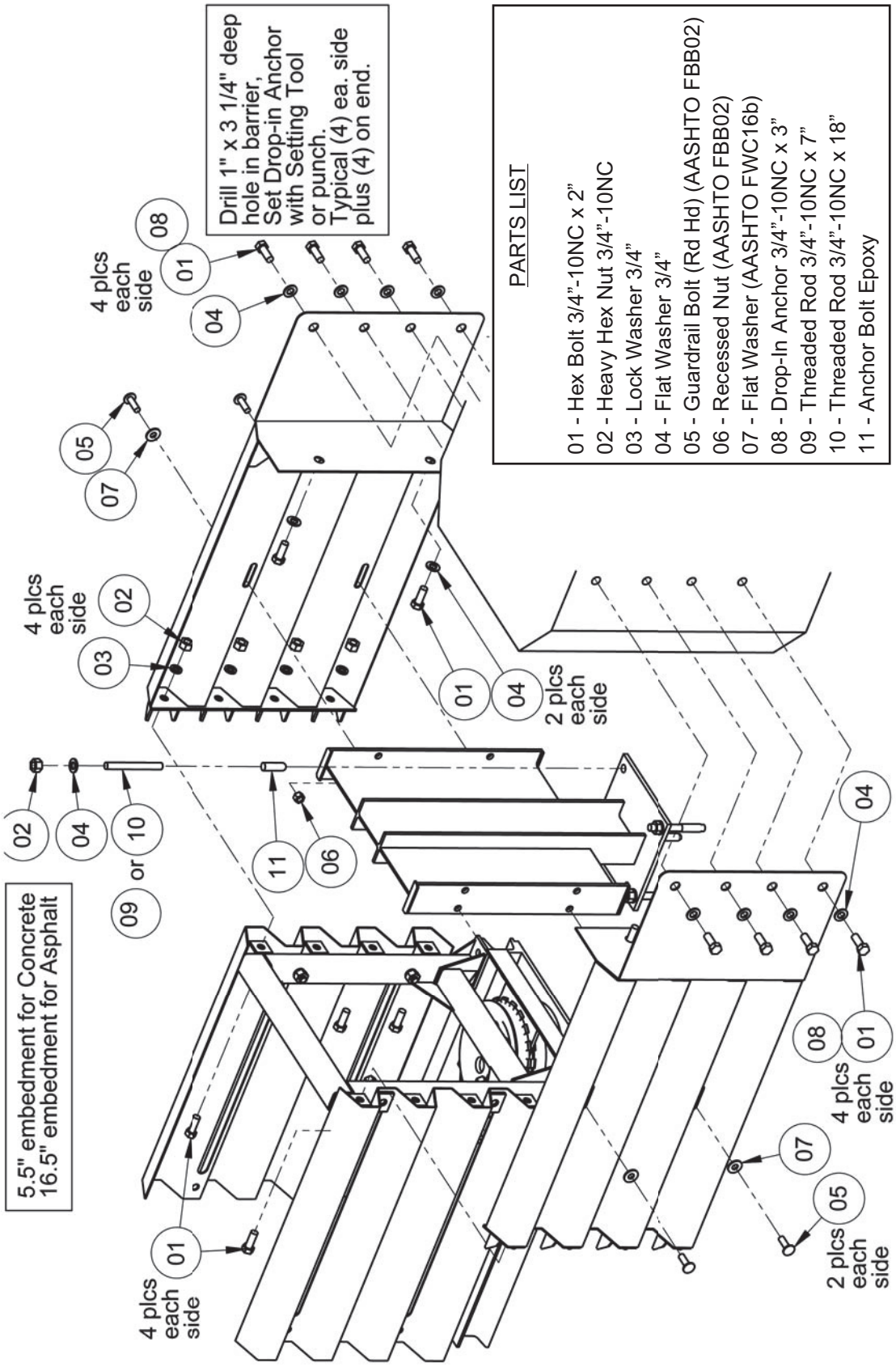

APPENDIX J - TRANSITION, CONCRETE BLOCK, 36 INCH (915mm)

PARTS LIST

Two Sided Full Assembly #9460
01 - Transition 36" Concrete Straight Connection #9464
02 - Transition Concrete Spanner Brace #9469
03 - Transition Concrete #1 Spanner Brace #9470

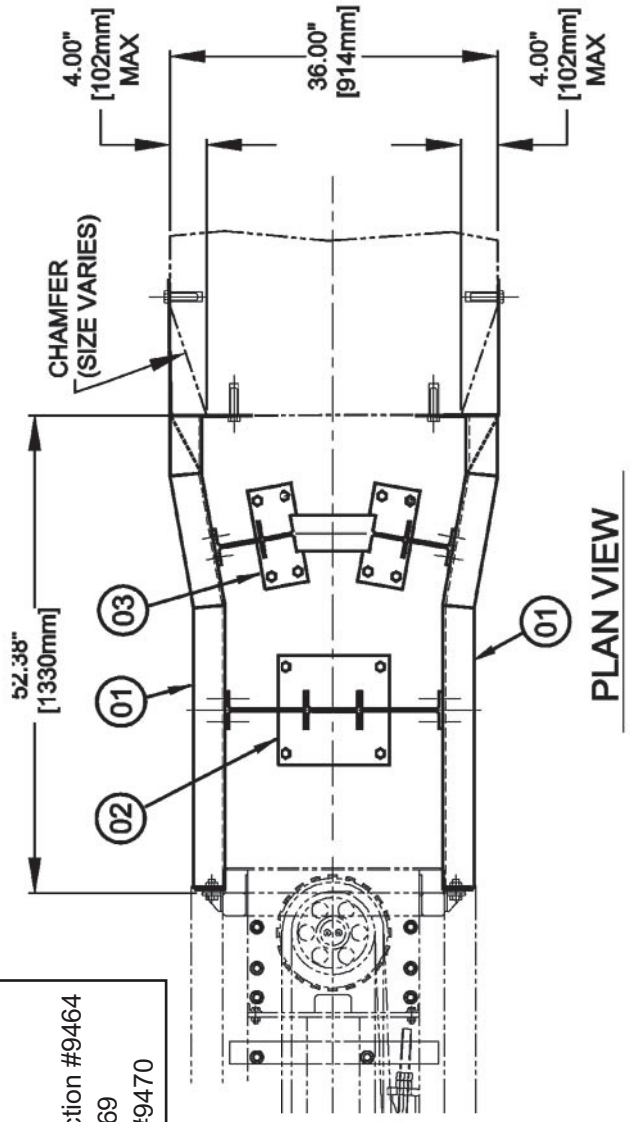

USED FOR:
1. Unchamfered Concrete Block
2. Chamfered Concrete Block ***

***Chamfer limited to <4"

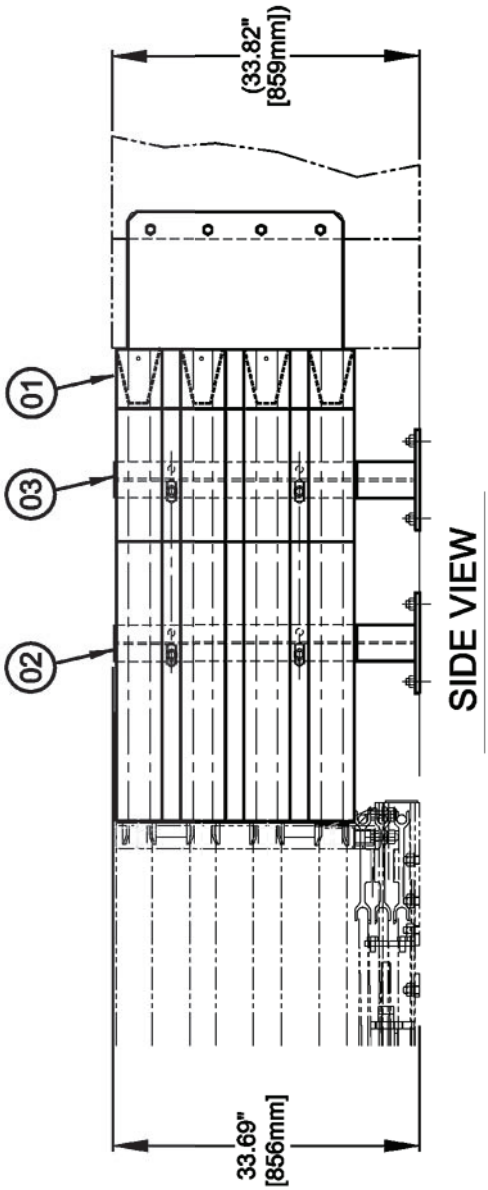

APPENDIX J2 - TRANSITION, CONCRETE BLOCK, 36 INCH (915mm)

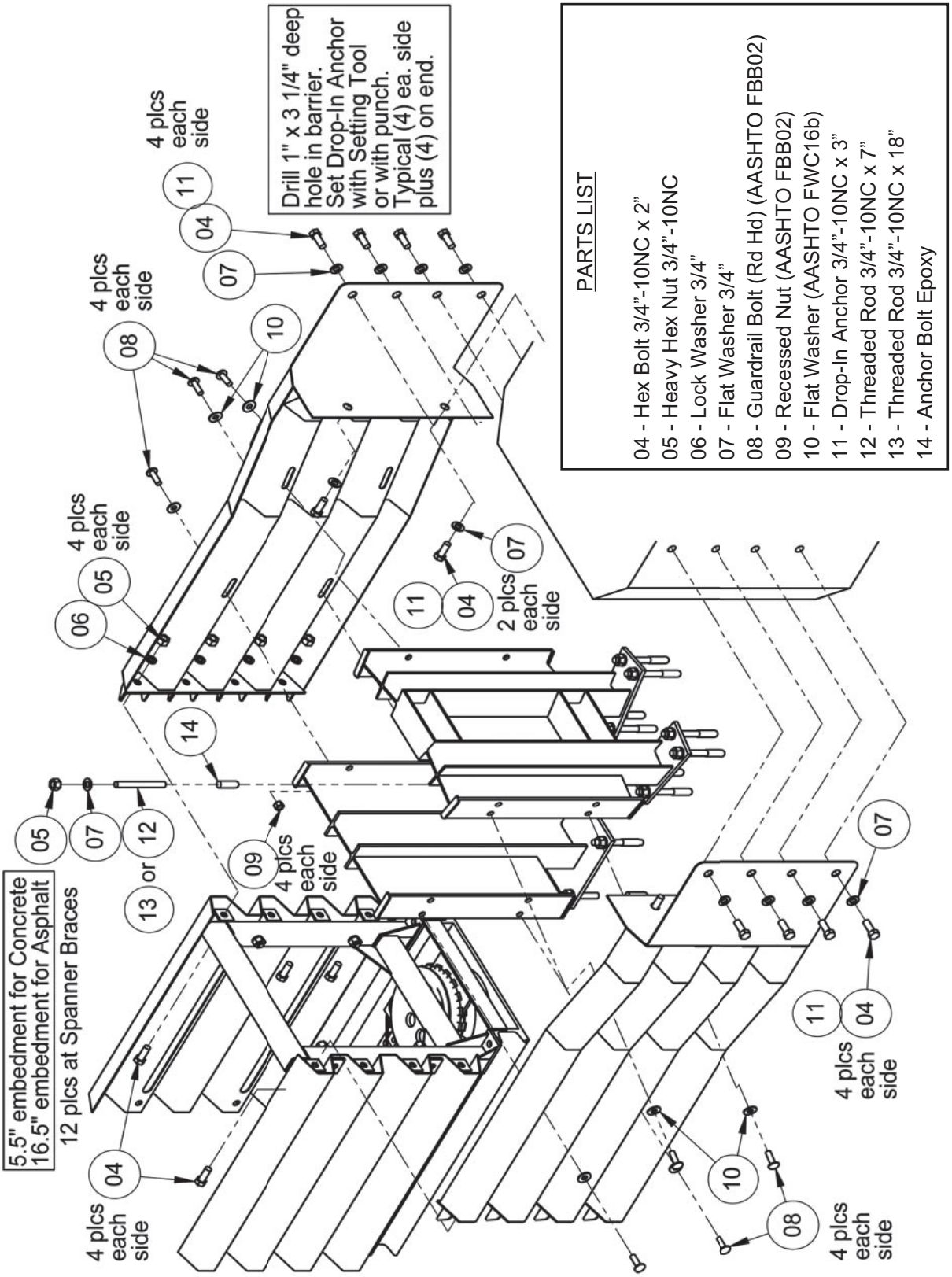

APPENDIX K - TRANSITION, CONCRETE BLOCK, 30 INCH (762mm) FLARED

PARTS LIST

Two Sided Full Assembly #9461
01 - Transition 30" Concrete Outside Connection #9465
02 - Transition Concrete Spanner Brace # 9469
03 - Transition Concrete #1 Tapered Spanner Brace #9470

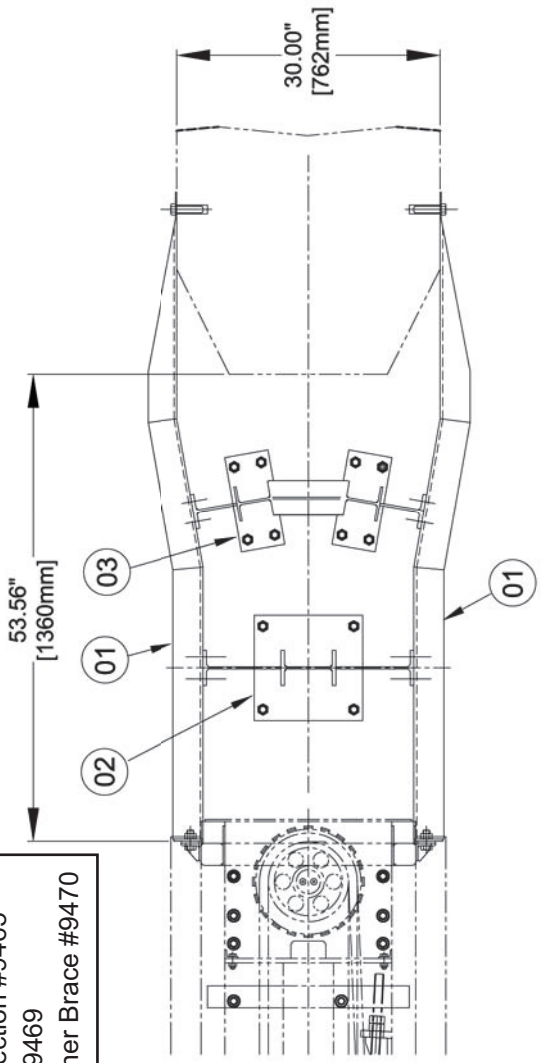

PLAN VIEW

USED FOR:
1. Unchamfered Concrete Block
2. Chamfered Concrete Block ***
*** Chamfer limited to <4"

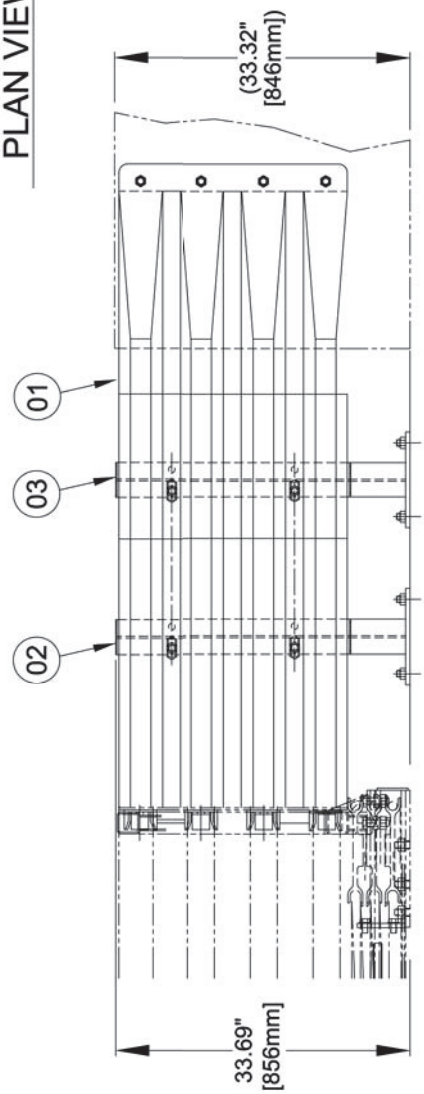

SIDE VIEW

APPENDIX K(2) - TRANSITION, CONCRETE BLOCK, 30 INCH (762mm) FLARED

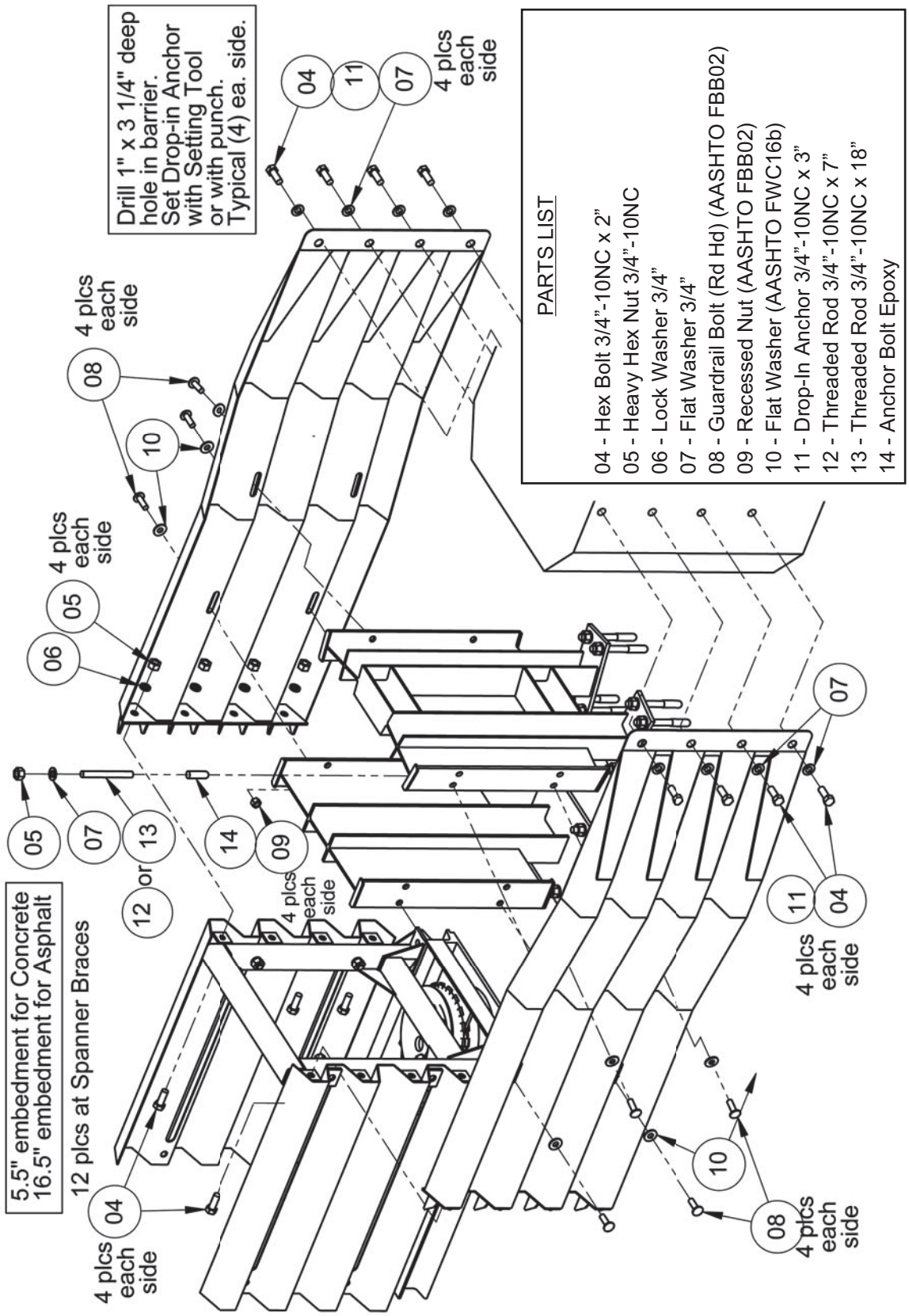

APPENDIX L - TRANSITION, CONCRETE BLOCK, 36 INCH (915mm) FLARED

PARTS LIST

Two Sided Full Assembly #9462
01 - Transition 36" Concrete Outside Connection #9466
02 - Transition Concrete Spanner Brace # 9469
03 - Transition Concrete #1 Tapered Spanner Brace #9470
04 - Transition Concrete #2 Tapered Spanner Brace #9471

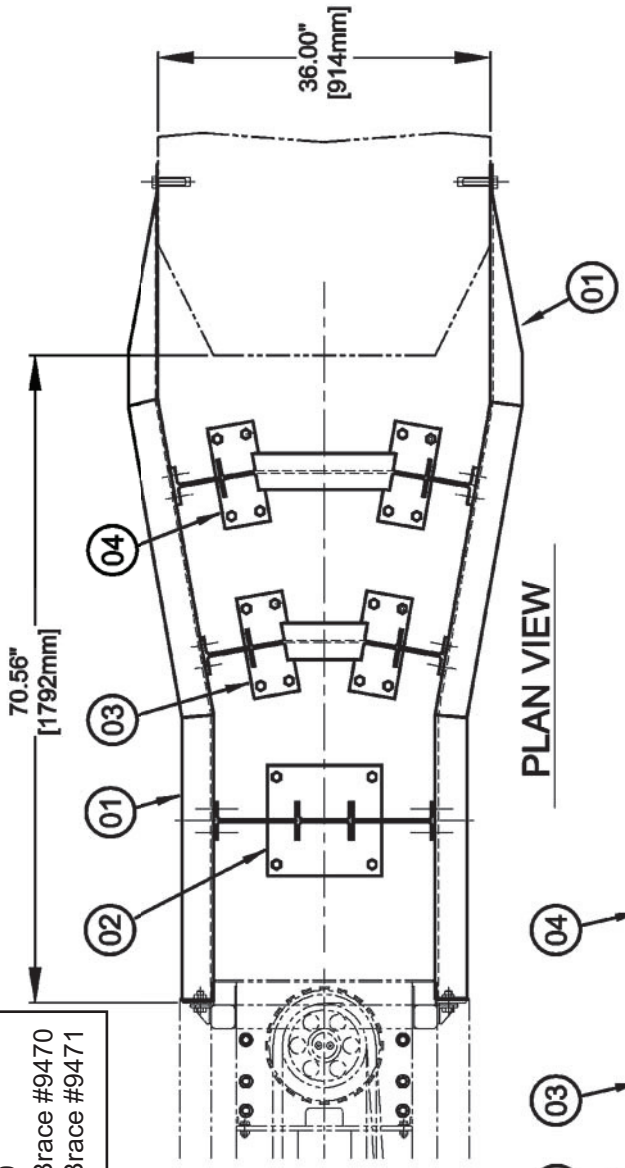

PLAN VIEW

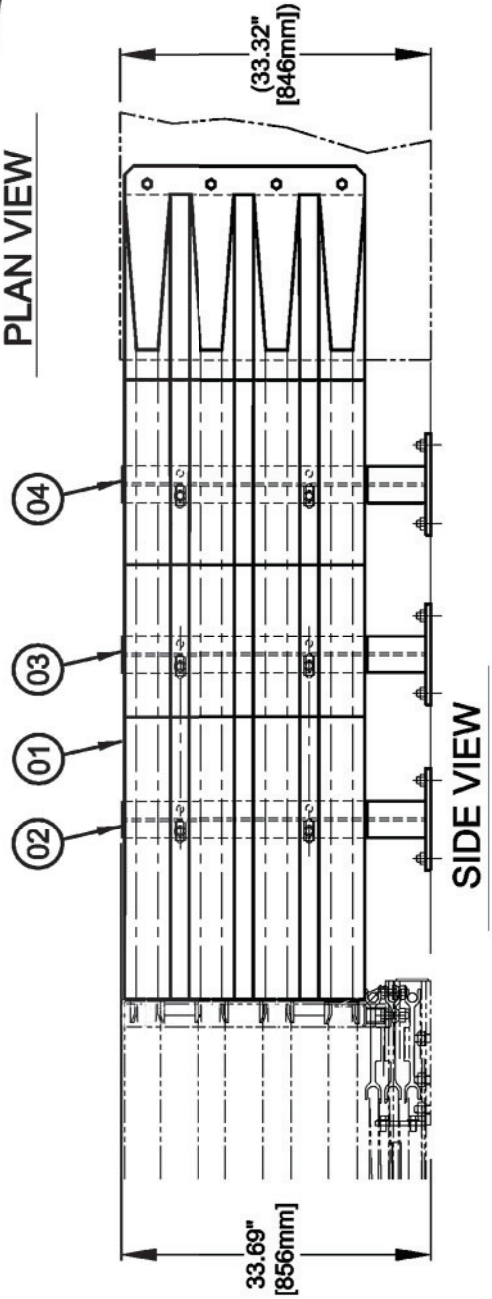

SIDE VIEW

APPENDIX L(2) - TRANSITION, CONCRETE BLOCK, 36 INCH (915mm) FLARED

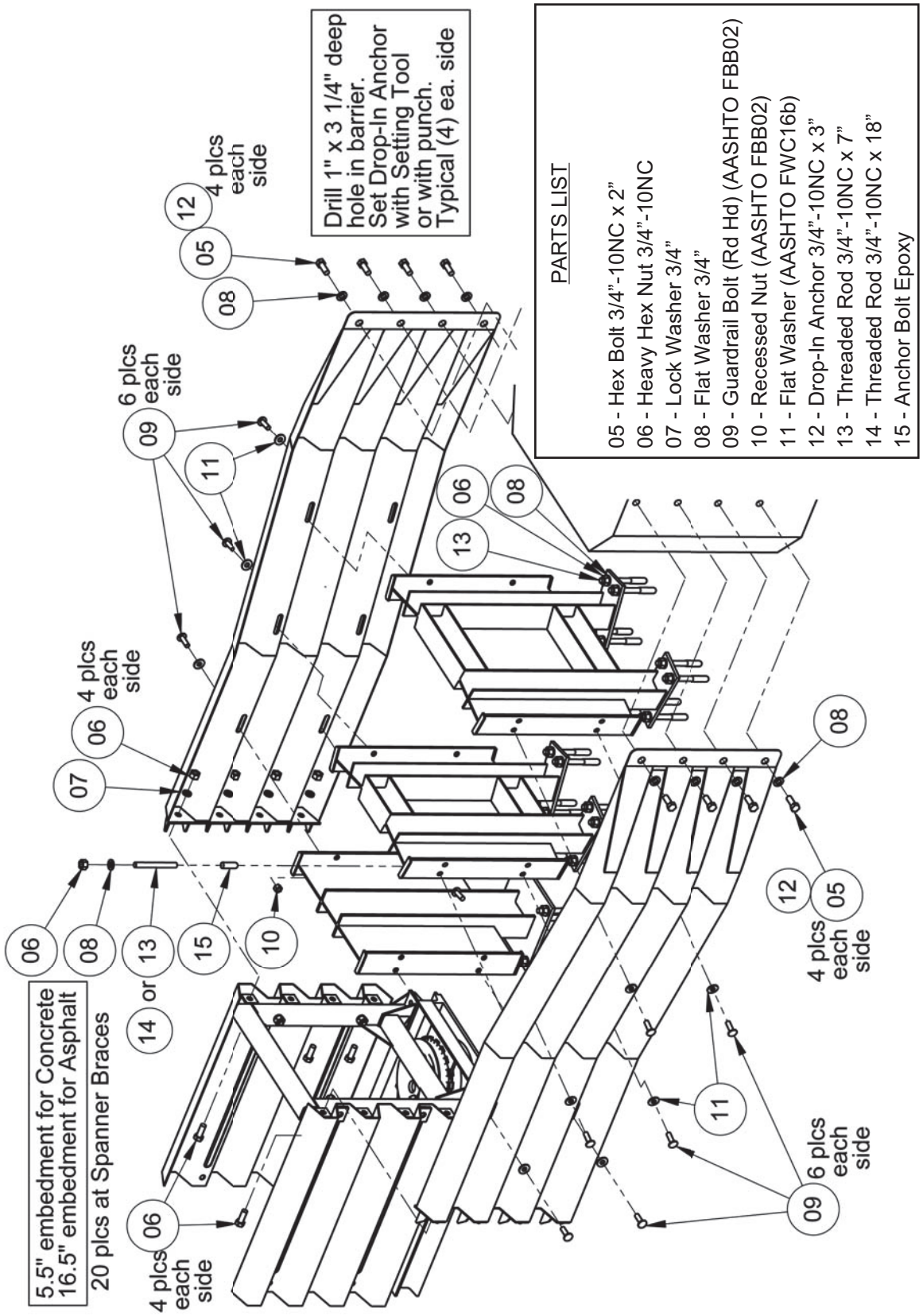

APPENDIX M - TRANSITION, THRIE BEAM

*****GUARDRAILS, POSTS, BLOCKOUTS AND CONNECTION BOLTS SUPPLIED BY OTHERS*****

PARTS LIST

01 - Transition Thrie & W Beam - Right #9437
01 - Transition Thrie & W Beam - Left #9438

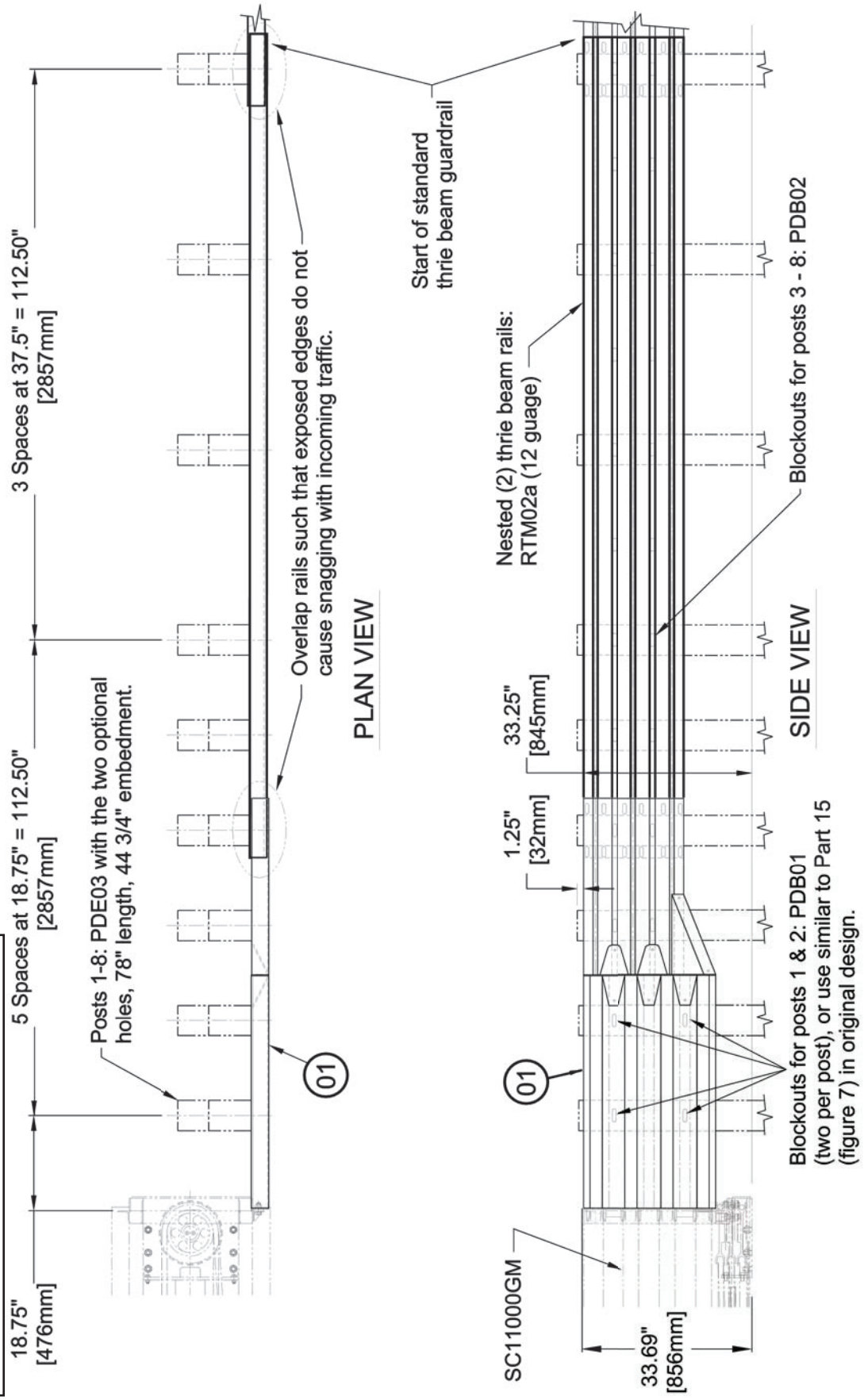

APPENDIX M(2) - TRANSITION, THRIE BEAM

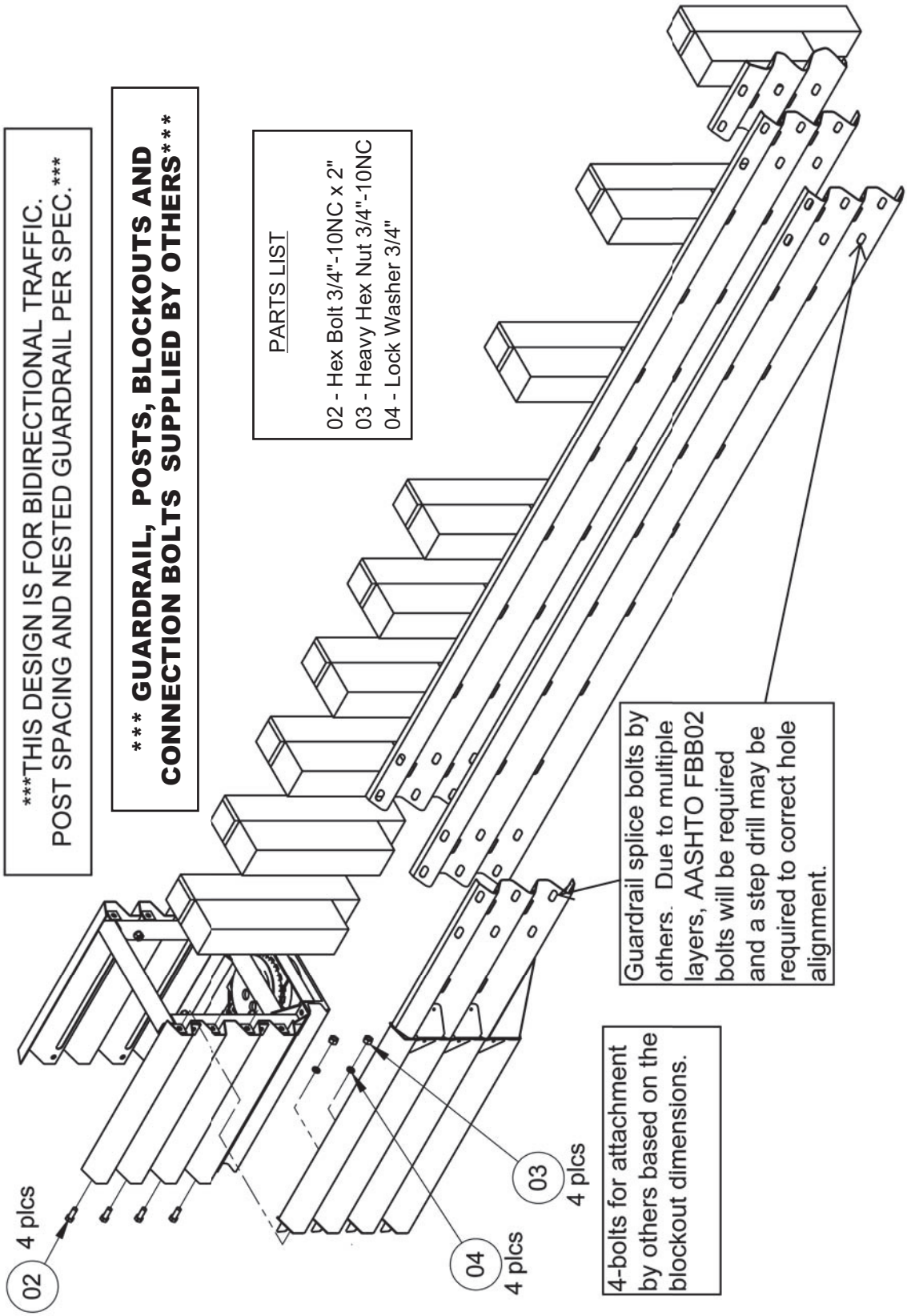

APPENDIX N - TRANSITION, W BEAM
*****FOR USE WITH REVERSE DIRECTION TRAFFIC *****

PARTS LIST

01 - Transition Thrie & W Beam - Right #9437
01 - Transition Thrie & W Beam - Left #9438

***** GUARDRAIL, POSTS, BLOCKOUTS AND CONNECTION BOLTS SUPPLIED BY OTHERS*****

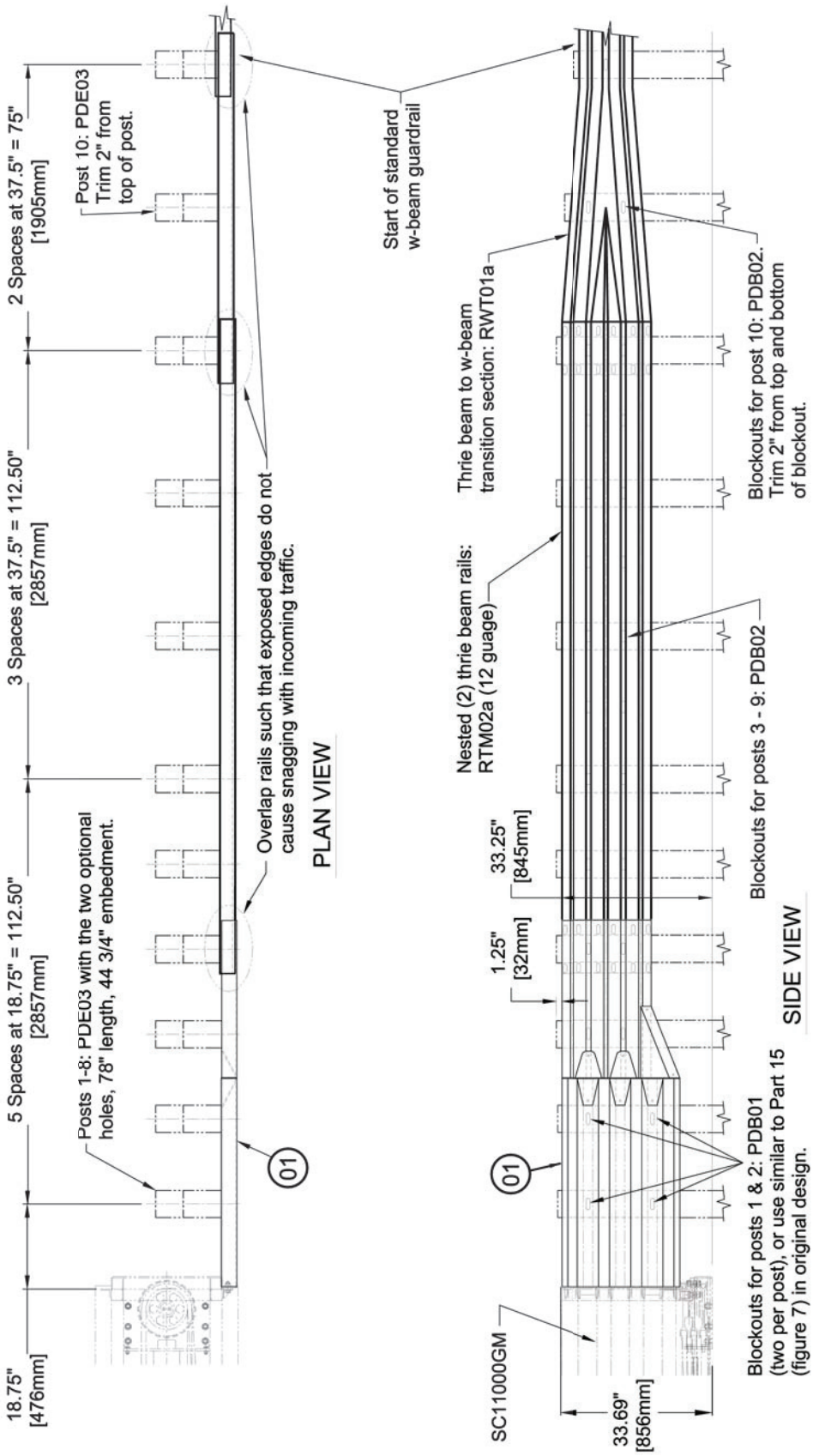

APPENDIX N(2) - TRANSITION, W BEAM

***THIS DESIGN IS FOR BIDIRECTIONAL TRAFFIC.
POST SPACING AND NESTED GUARDRAIL PER SPEC.***

***** GUARDRAIL POSTS, BLOCKOUTS AND CONNECTION BOLTS SUPPLIED BY OTHERS*****

PARTS LIST

02 - Hex Bolt 3/4"-10NC x 2"
03 - Heavy Hex Nut 3/4"-10NC
04 - Lock Washer 3/4"

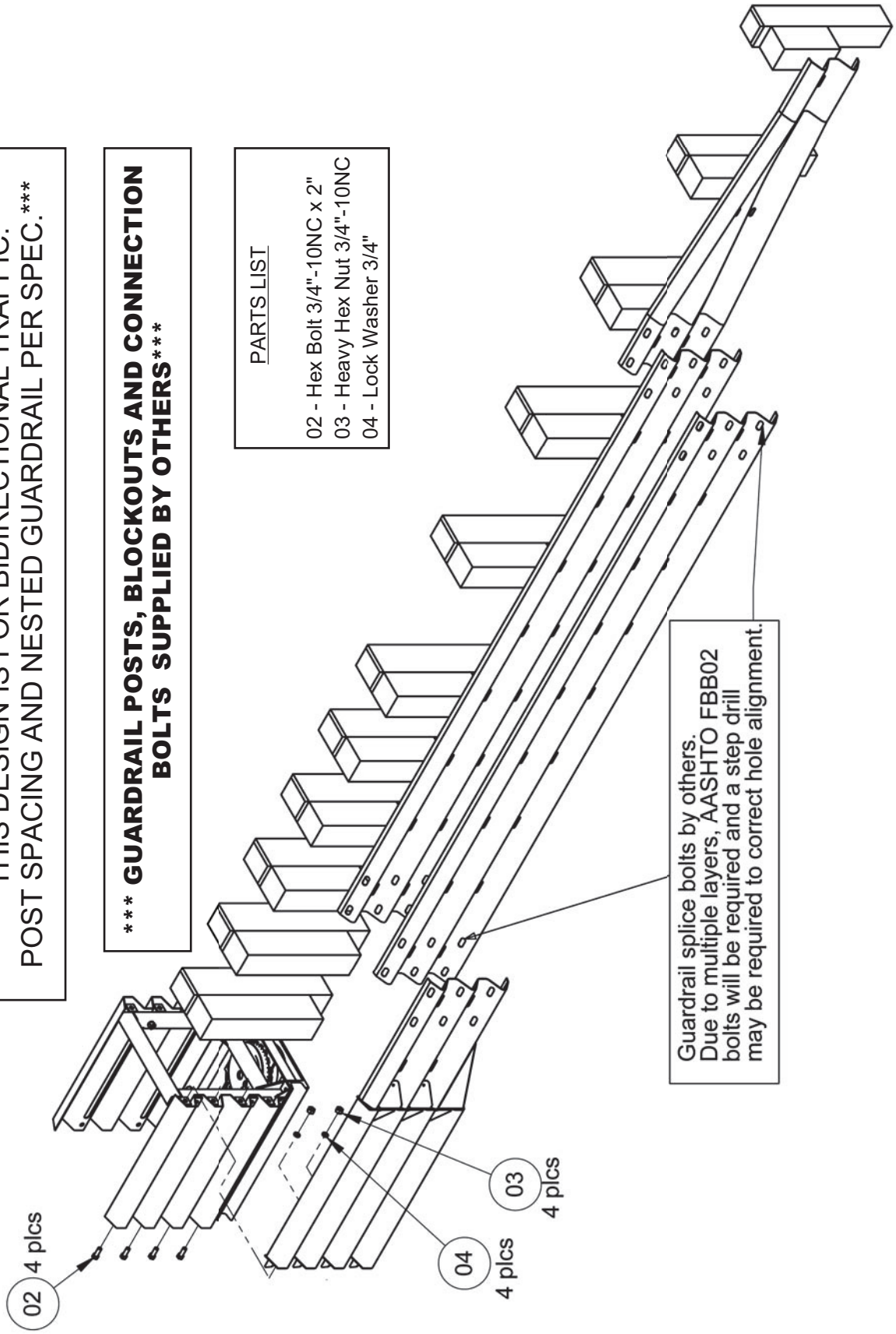

APPENDIX O - TRANSITION, JERSEY/F SHAPE, VARIABLE WIDTH BASE

PARTS LIST

Double Sided Median Base 30"-38" Base:
Two Sided Full Assembly
With Rub Rail #9528
Without Rub Rail #9535
01 - Transition - Left #9494
02 - Transition - Right #9493
03 - Transition Rub Rail - Left #9481
04 - Transition Rub Rail - Right #9480
05 - Transition Support Bracket - Right #9526
06 - Transition Support Bracket - Left #9527

For use with barriers with base widths of 30"-38"
Rub rails only required for base widths > 34"

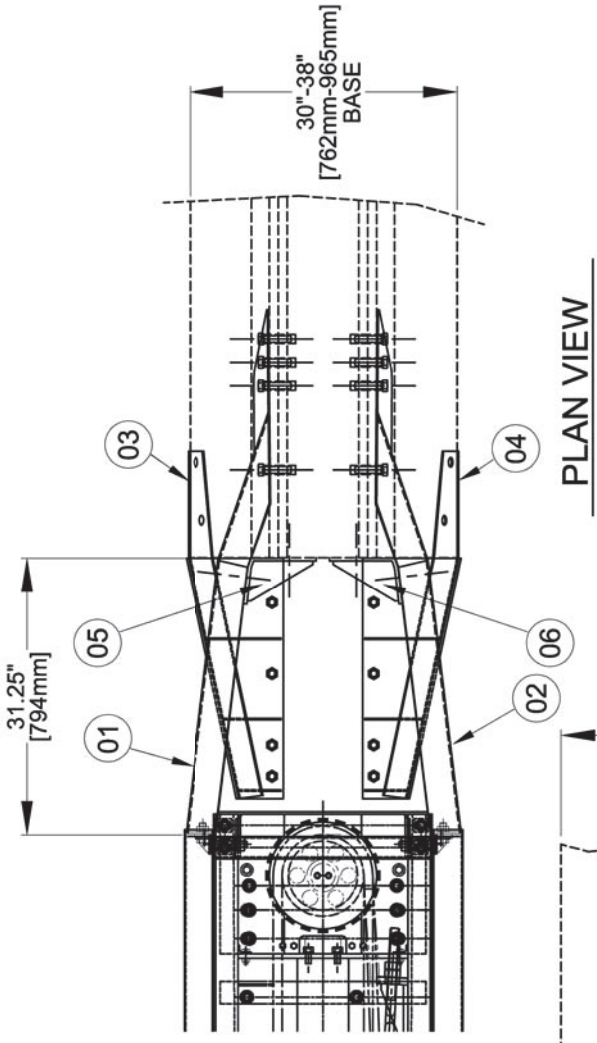

PLAN VIEW

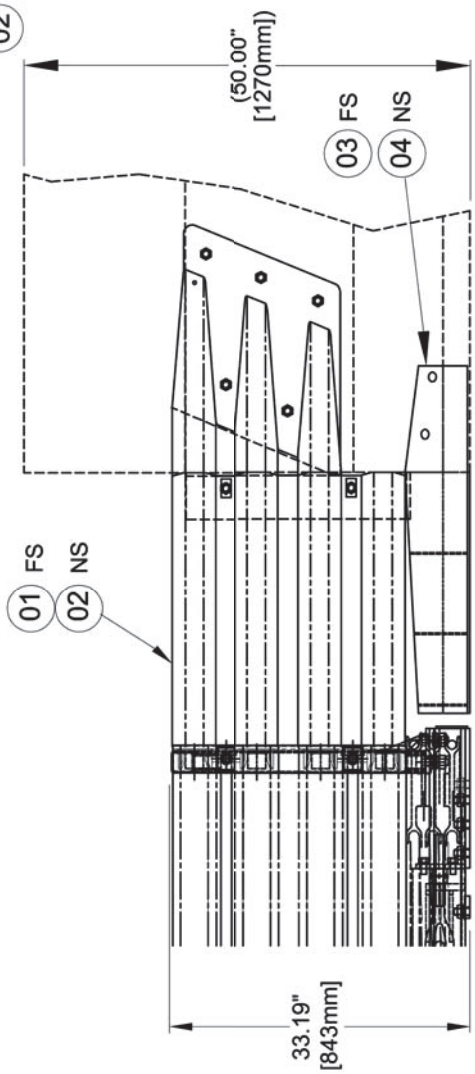

SIDE VIEW

APPENDIX O(2) - TRANSITION, JERSEY/F SHAPE, VARIABLE WIDTH BASE

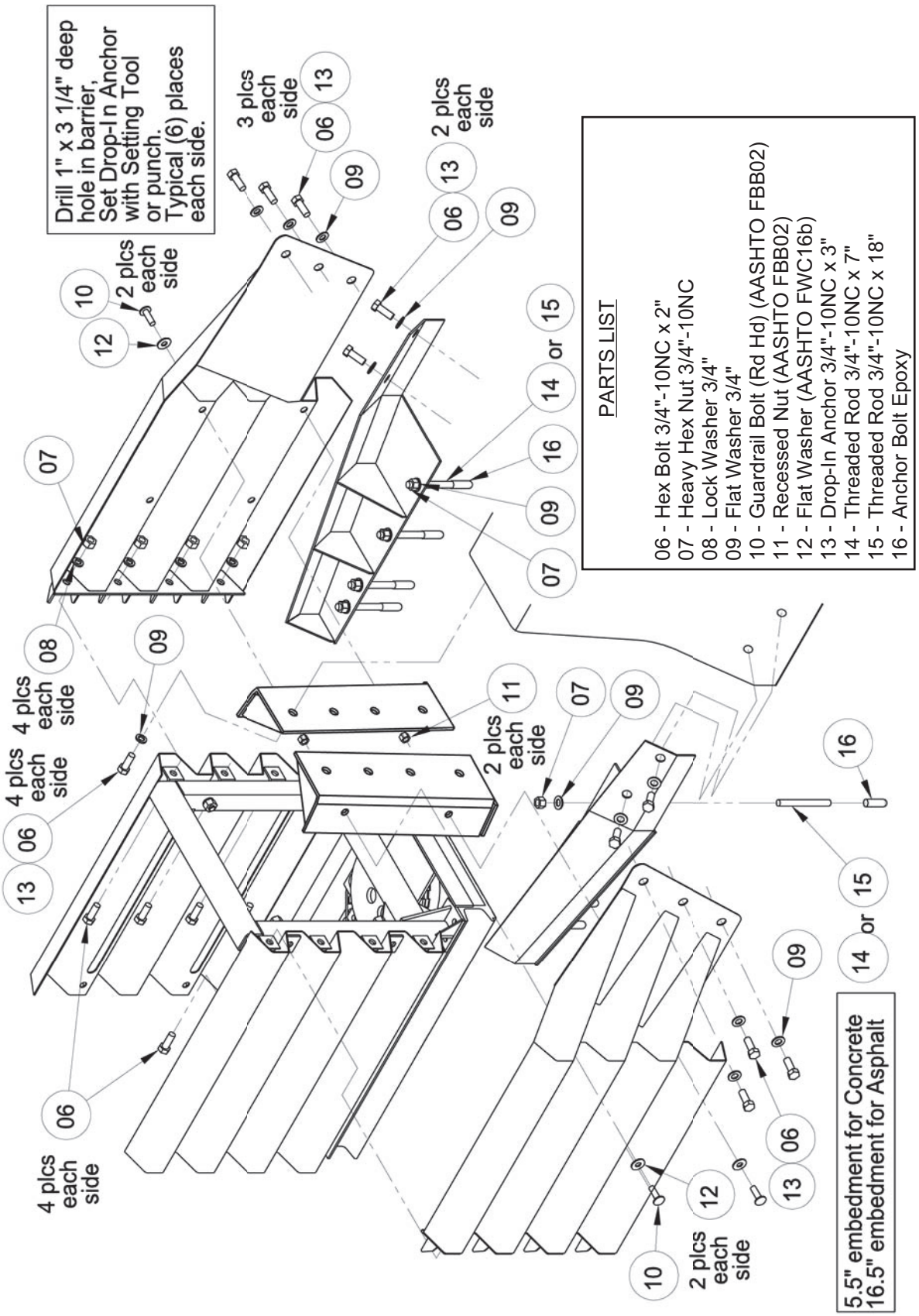

APPENDIX P - TRANSITION, MEDIAN BARRIER, SINGLE SLOPE

PARTS LIST

01 - Transition Single Slope Barrier - Right #9490
01 - Transition Single Slope Barrier - Left #9491

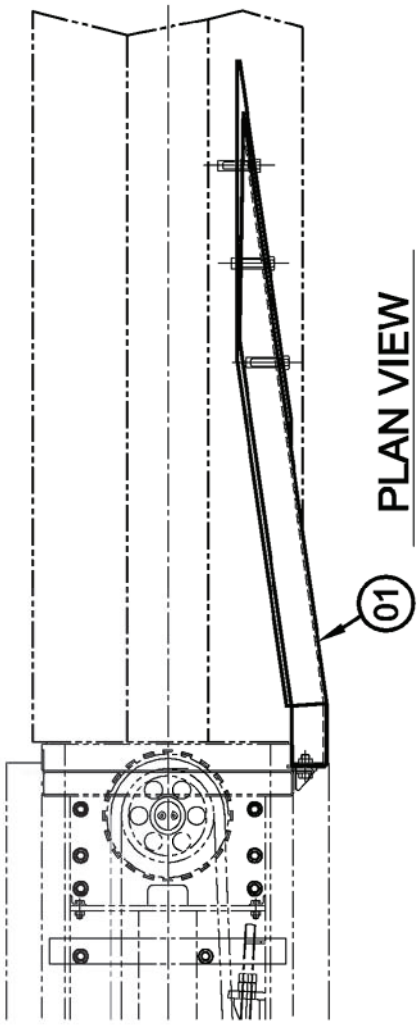

PLAN VIEW

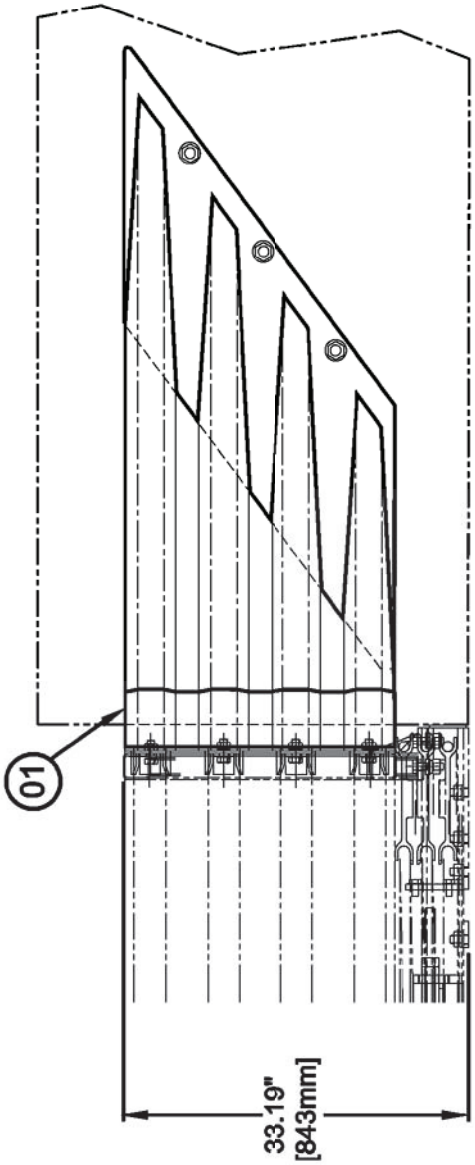

SIDE VIEW

APPENDIX P(2) - TRANSITION, MEDIAN BARRIER, SINGLE SLOPE

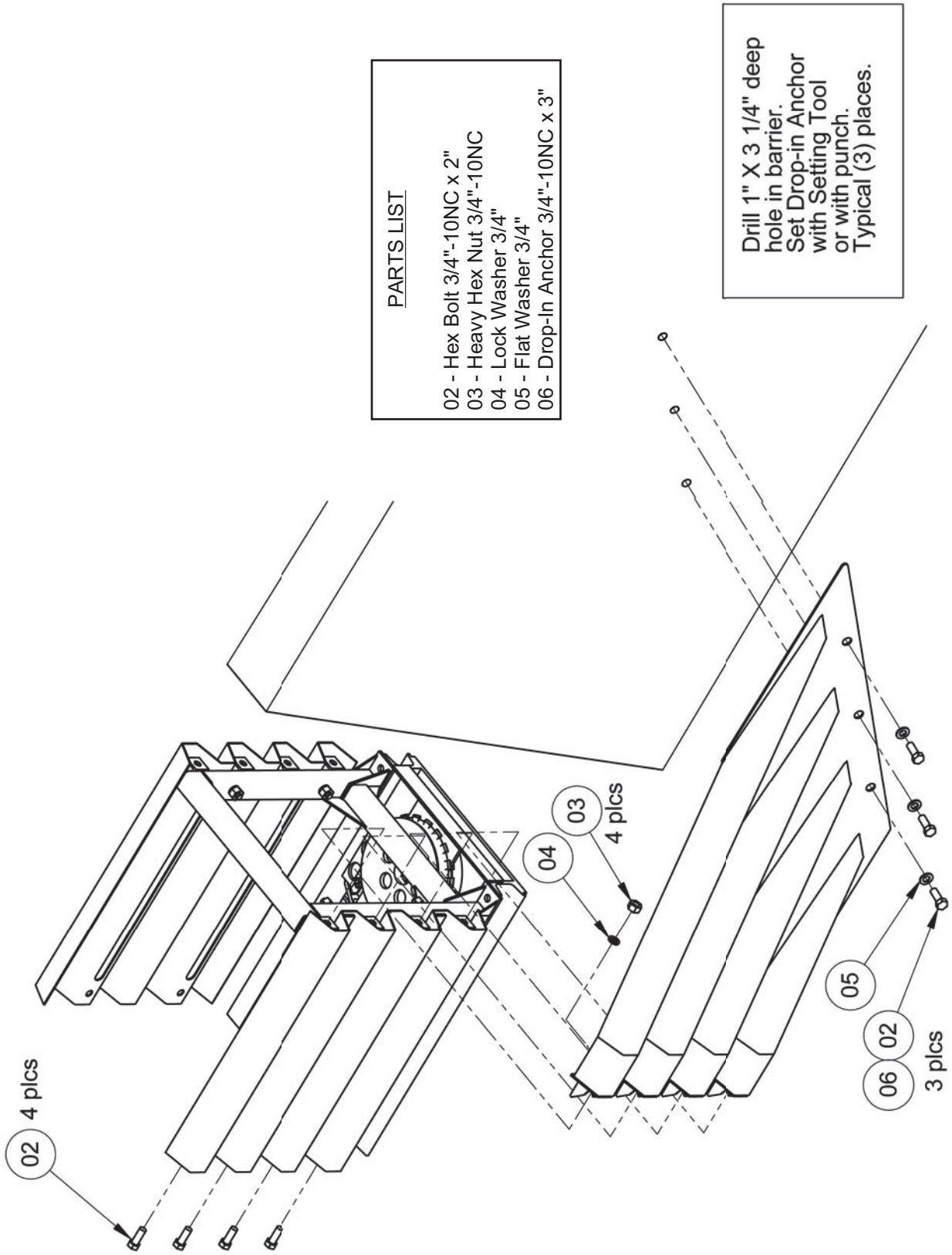

APPENDIX Q - TRANSITION, W - BEAM 28 INCH HIGH
*****FOR USE WITH NO REVERSE DIRECTION TRAFFIC *****

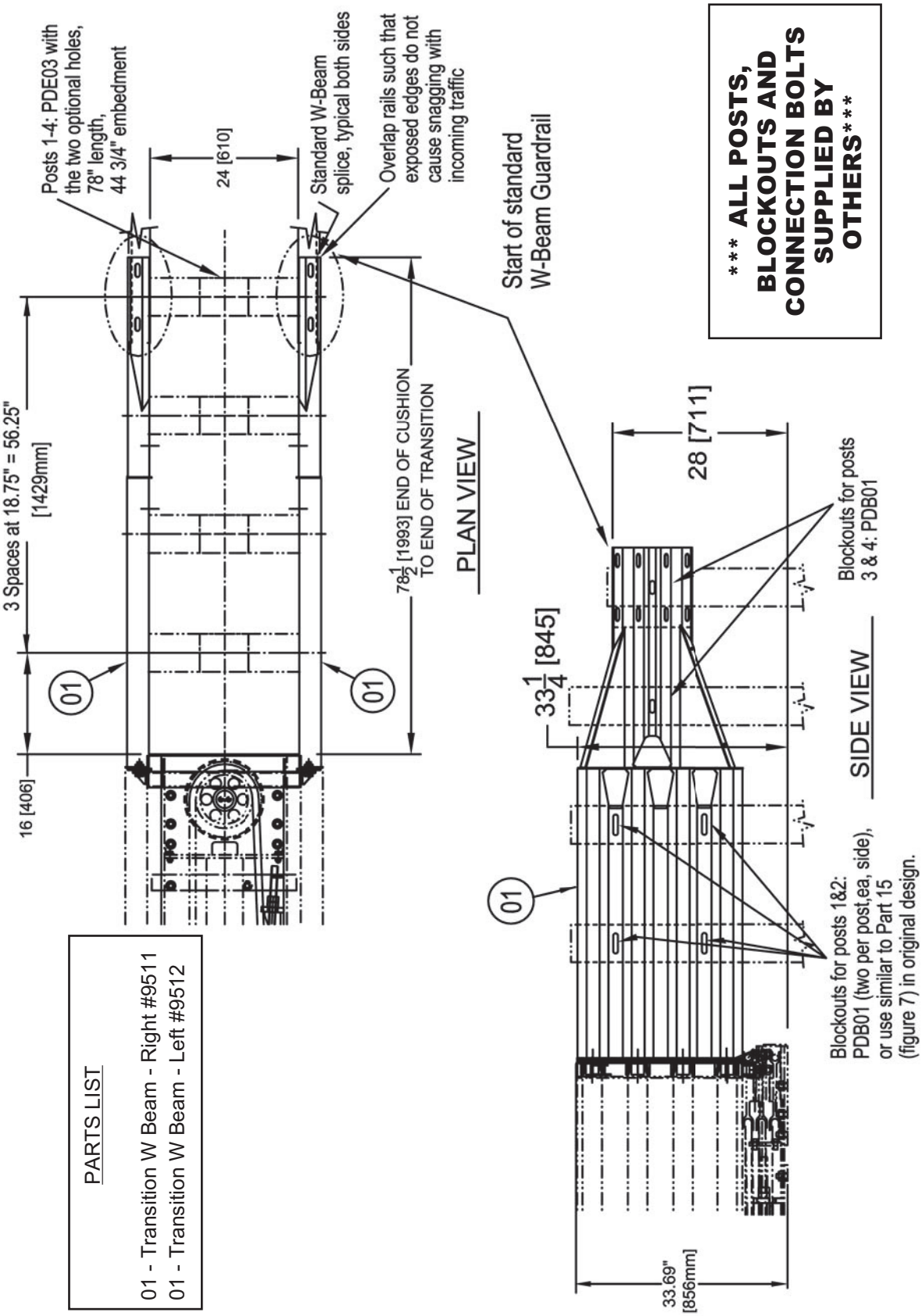

***** ALL POSTS, BLOCKOUTS AND CONNECTION BOLTS SUPPLIED BY OTHERS*****

PARTS LIST

01 - Transition W Beam - Right #9511
01 - Transition W Beam - Left #9512

APPENDIX R - TRANSITION, W - BEAM 32 INCH HIGH
*****FOR USE WITH NO REVERSE DIRECTION TRAFFIC *****

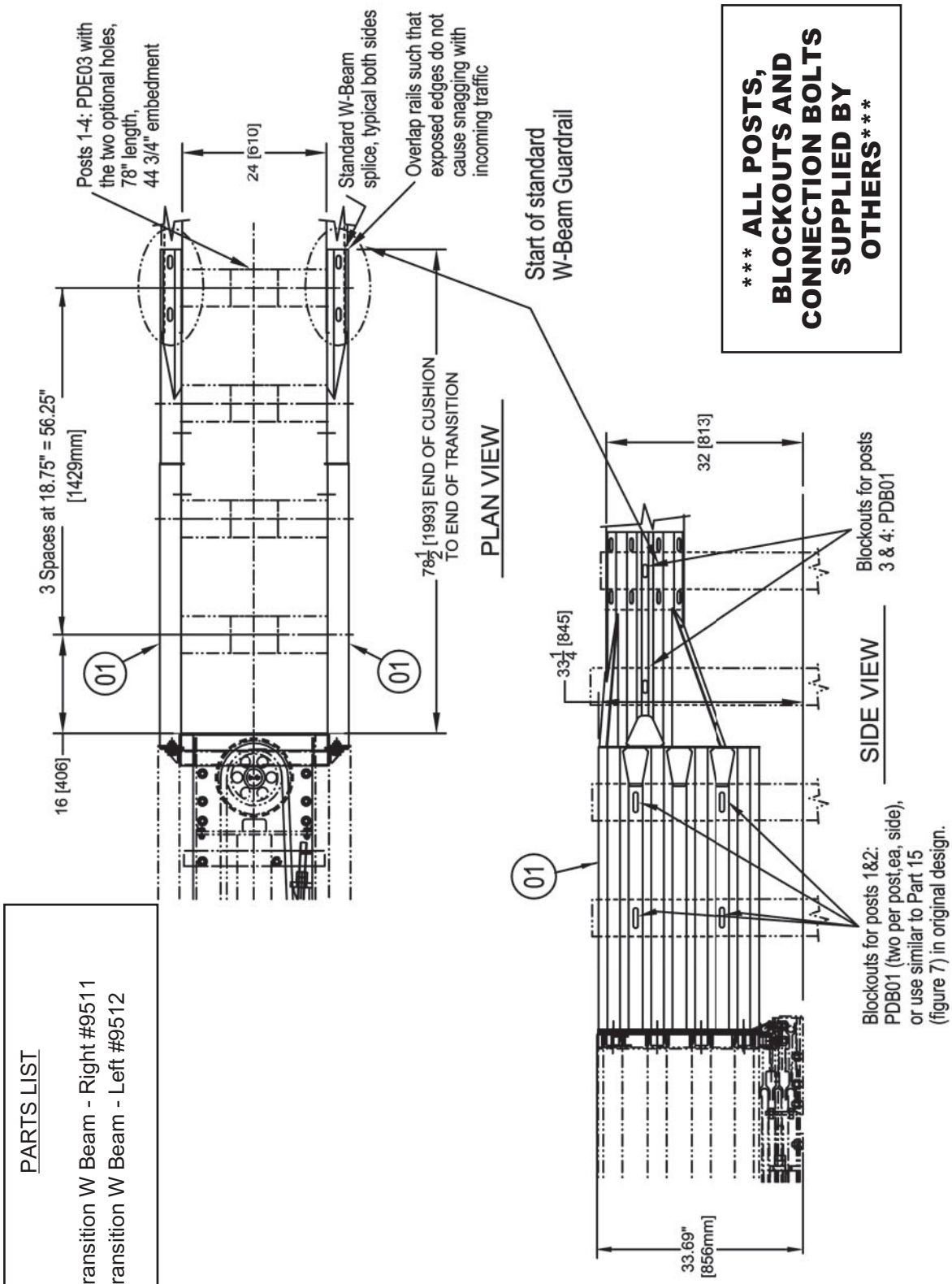

***** ALL POSTS, BLOCKOUTS AND CONNECTION BOLTS SUPPLIED BY OTHERS*****

PARTS LIST

01 - Transition W Beam - Right #9511
01 - Transition W Beam - Left #9512

APPENDIX Q(2) & R(2) - TRANSITION, W-BEAM 28" & 32" HIGH

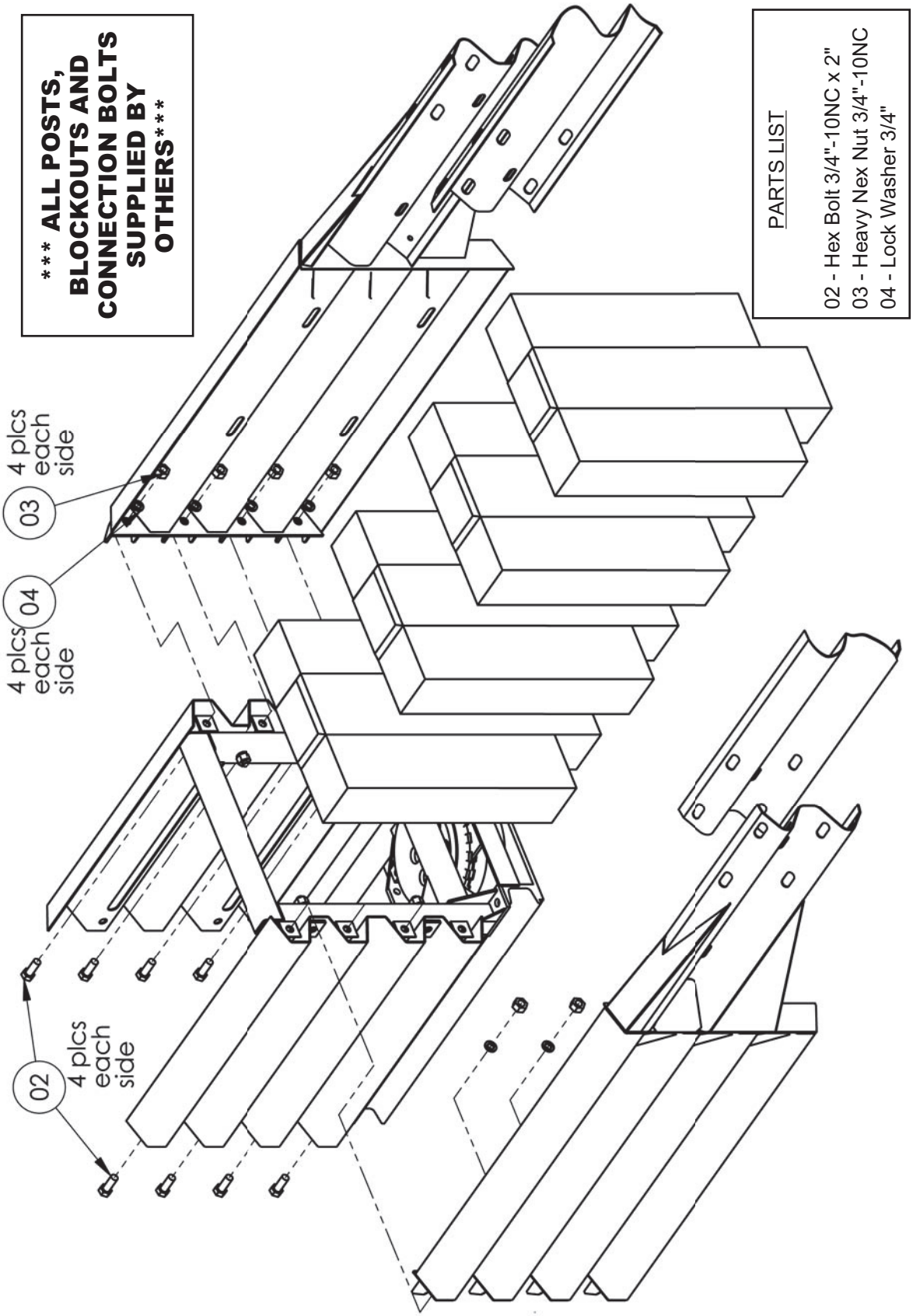

APPENDIX S - TRANSITION, WIDE BLOCK SPANNER

PARTS LIST

01 - Spanner Transition to Wide Block Right (shown)
& Left #9537 (opposite)

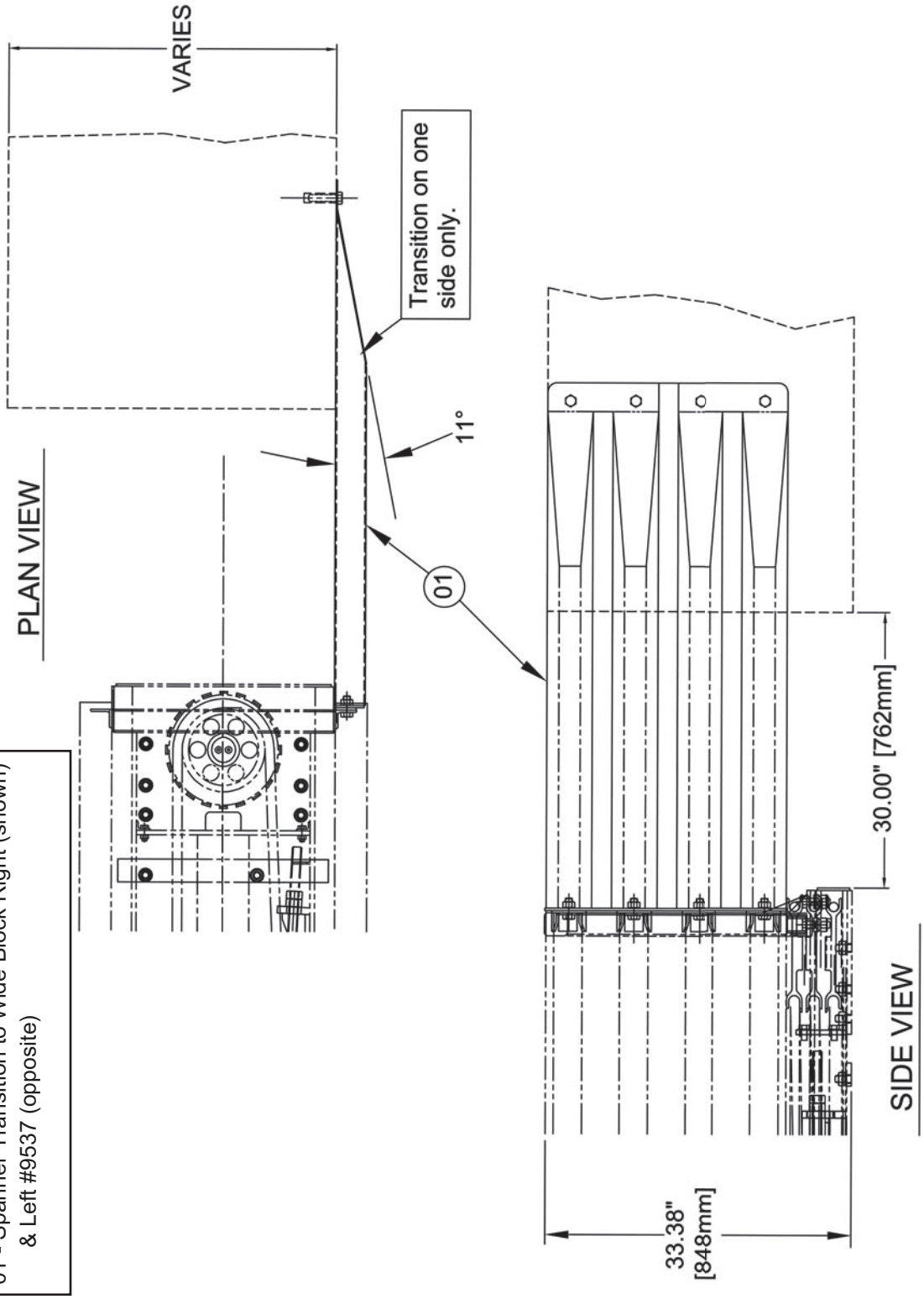

APPENDIX S(2) - TRANSITION, WIDE BLOCK SPANNER

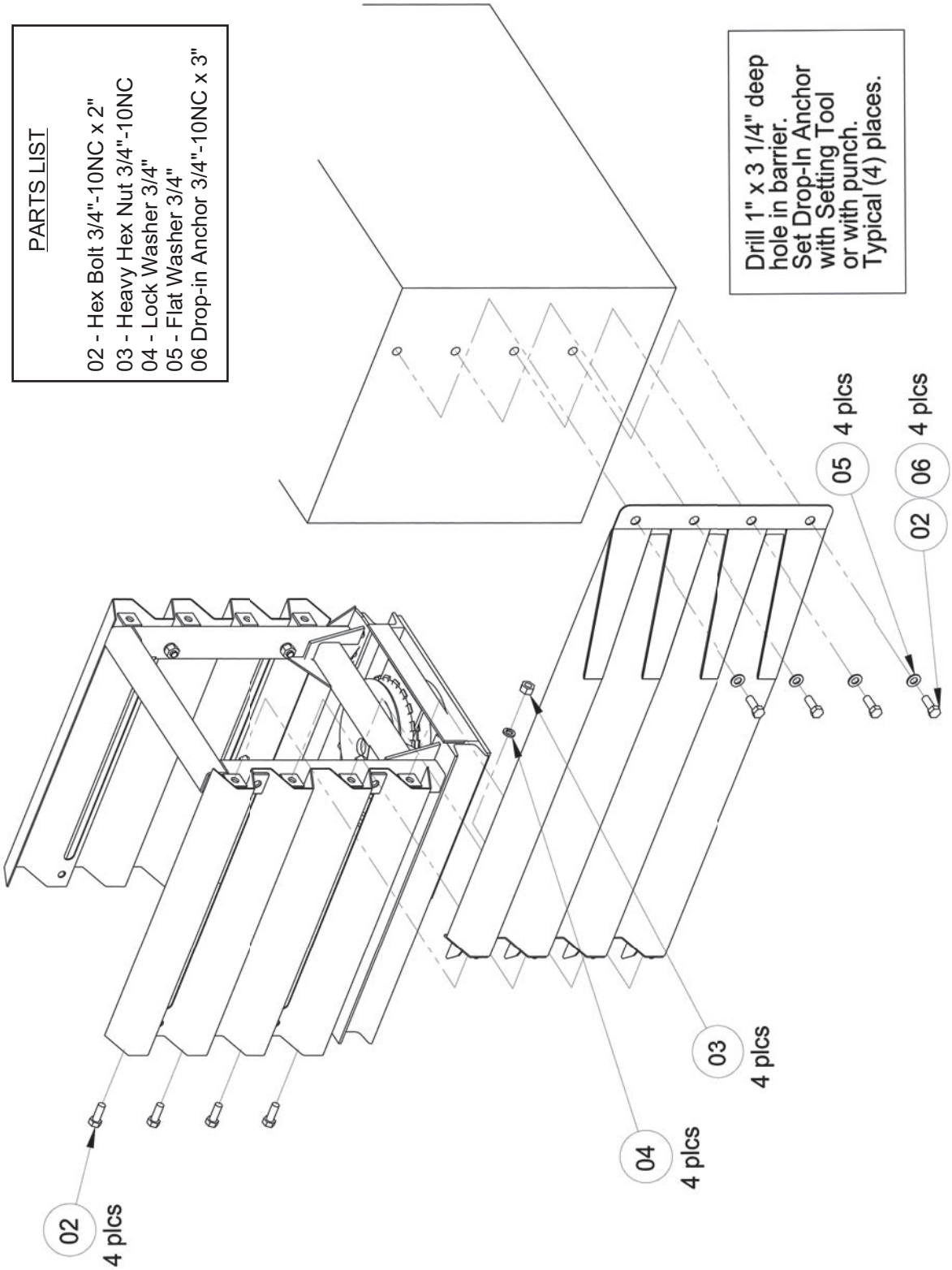

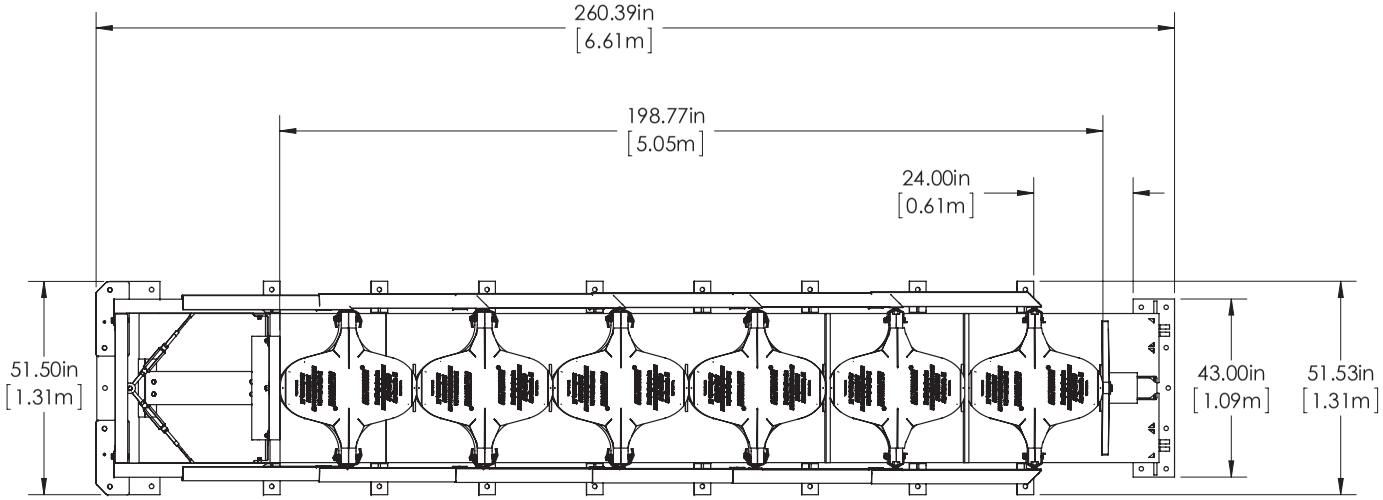

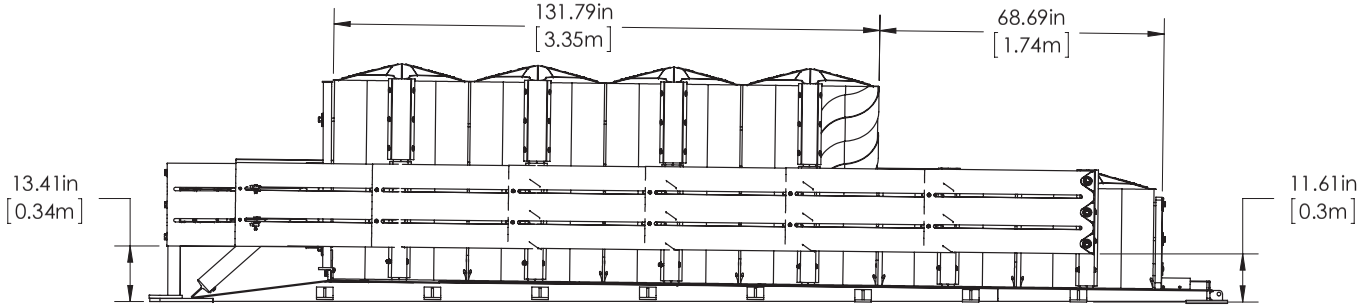

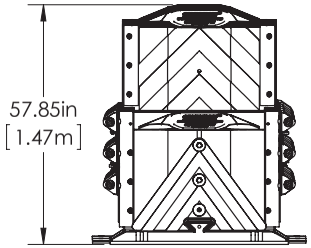

UNLESS OTHERWISE SPECIFIED:
ALL DIMENSIONS ARE IN INCHES [m]
TOLERANCES:
DECIMAL: 0.0 ± .0625" [1.59mm]
0.00 ± .032" [0.81mm]
0.000 ± .015" [0.38mm]
DEGREES: ± 0.5°

TrafFix Devices Inc.
160 Avenida La Pata
San Clemente, CA 92673
(949) 361-5663
FAX (949) 361-9205
www.traffixdevices.com

TITLE:
COMPRESSOR DIMENSIONS

DRAWN BY: Mary Drolle	DATE: 10/19/12	SIZE B	DWG. NO. 600-114 A
CHECKED BY: GM	DATE: 10/19/12		
APPROVED BY: GM	DATE: 10/19/12		SHEET 1 OF 1

QuadGuard® ELITE
Crash Cushion

The QuadGuard® Elite offers the added value of reusable cylinders for applications with above average impact frequency. The system is NCHRP 350 Test Level 2 and Test Level 3 compliant as a redirective, non-gating crash cushion. The QuadGuard® Elite's cylinders are made of High Density Polyethylene (HDPE), a material that can typically with-stand multiple impacts before requiring replacement.

QuadGuard® Elite, as a member of the QuadGuard® family of crash cushions, utilizes many of the same components as the QuadGuard®.

Features

- Reusable High Density Polyethylene (HDPE) cylinders provide low life cycle costs.
- Flex-belt nose.
- High strength Quad-Beam™ panels.
- Needs no anchoring chains or tension cables.
- Compact, modular design accommodates speeds from 25 mph (40 km/h) to 70 mph (113 km/h).
- Custom connections available.
- Systems available for various lengths, widths and speeds.

Back-Up Structure Attachments

- Simplified backups - Tension strut or concrete.
- Bridge pier(s) and parapet(s).
- Square block(s).
- Temporary & permanent concrete barrier(s).
- Thrie-beam.
- W-beam.

Installation and Repair Advantages

- Reusable HDPE cylinders may allow for multiple impacts.
- Monorail base eliminates need for anchoring chains/tension cables.
- QuadGuard® Elite may be reusable after NCHRP 350 testing impacts.
- Anchorage options include: asphalt, concrete, soil- drive pile.

Specifications

Typical eight-bay unit (available in widths of 24", 30", 36", 69", 90" or custom widths):

- 26.75' Long (8 m)
- 24" (610 mm) min., 90" (2.29 m) max. width at backup structure.
- 4900 lbs. (2223 kg)

1-800-527-6050
www.highwayguardrail.com

1-888-323-6374
www.energyabsorption.com

TRINITY
HIGHWAY PRODUCTS
ENERGY ABSORPTION SYSTEMS

BUILDING TOMORROW'S HIGHWAY SAFETY SOLUTIONS TODAY

APPENDIX C - SMART CUSHION®, TEST LEVEL 2

PARTS LIST

01 - Front Sled
02 - Cable Assembly
05 - Sled Panel
07 - Terminal Brace
09 - Anchor Bolts
12 - Side Panels
14 - Mobile Sheave Assembly
17 - Cable Adjuster Bolt
18-20 - Mobile Frames 4-6
26 - Cylinder
27 - Rear Panel
06, 08, 29 - Side Keepers

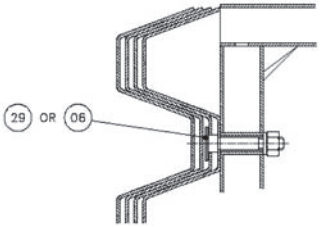

DETAIL A

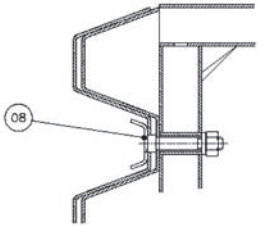

DETAIL B

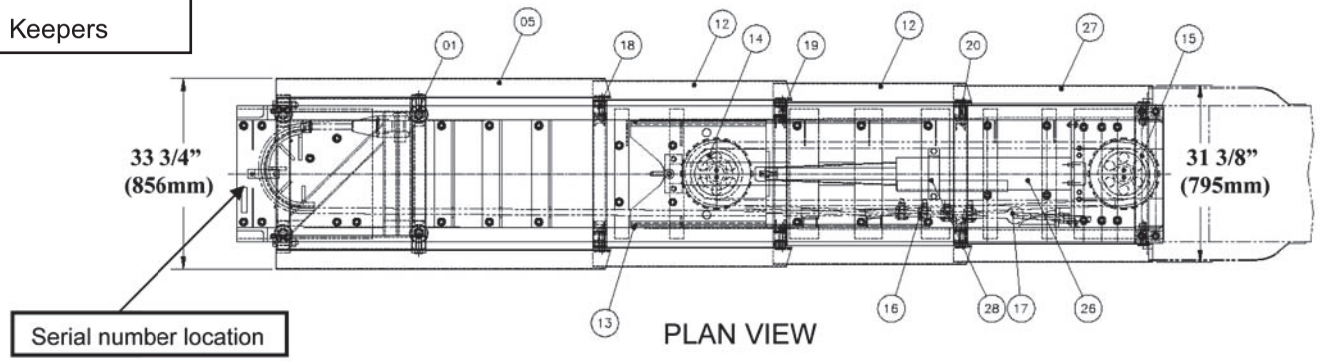

PLAN VIEW

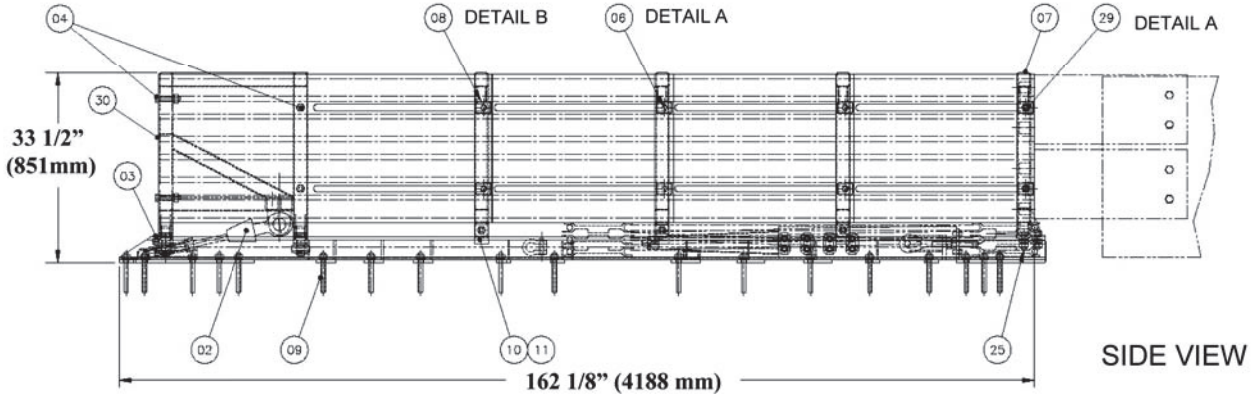

SIDE VIEW

APPENDIX D - SMART CUSHION®, TEST LEVEL 3

PARTS LIST

01 - Front Sled
02 - Cable Assembly
05 - Sled Panel
07 - Terminal Brace
09 - Anchor Bolts
12 - Side Panels
14 - Mobile Sheave Assembly
17 - Cable Adjuster Bolt
18-23 - Mobile Frames 1-6
26 - Cylinder
27 - Rear Panel
06, 08, 29 - Side Keepers

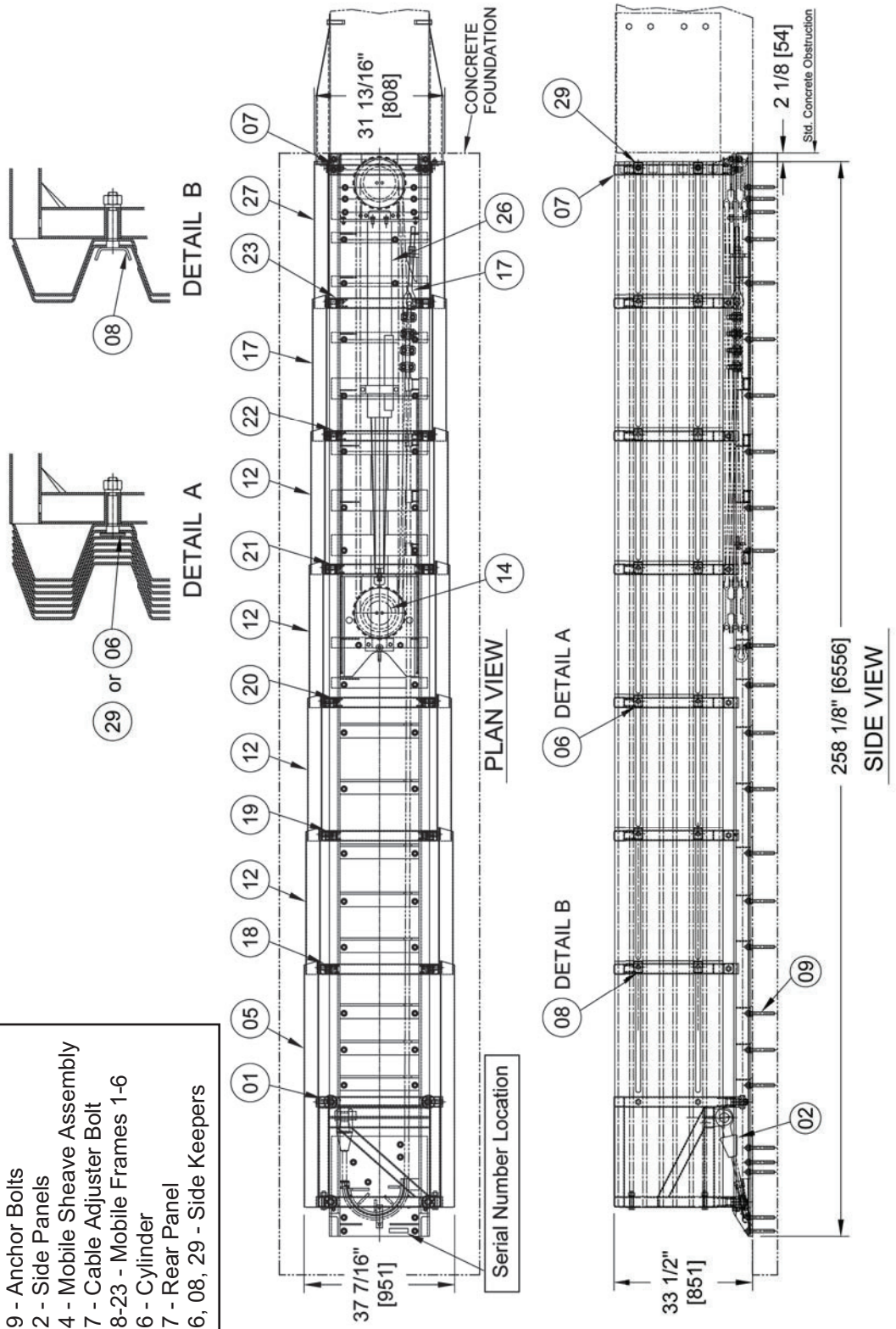

APPENDIX E1 - TEST LEVEL 2 FOUNDATION

Cross Slope at Top Surface not to Exceed 1 in 10
Foundation must be a Level Plane

* * * * * Wide Hazards and Transitions may require the foundation to be longer. See Transition Drawings.

SPECIFICATIONS

All reinforcing steel - straight #4 ASTM-A36

Embedment requirements:

- 6" reinforced concrete pad with anchor embedment of 5 1/2"
- 8" non-reinforced concrete pad with anchor embedment of 5 1/2"
- 3" asphalt over 3" concrete with anchor embedment of 16 1/2"
- 6" asphalt over 6" of compacted subbase with anchor embedment of 16 1/2"
- 8" asphalt with anchor embedment of 16 1/2"

The contractor shall furnish a certification for material installed to the following requirements:

- 6" reinforced concrete (PCC) sampling per ASTM C31-84, testing per ASTM C39-84
- 8" non-reinforced concrete (PCC) sampling per ASTM C31-84, testing per ASTM 39-84
- 3" asphalt over 3" concrete - Type SP 12.5 Level C or higher
- 6" asphalt over 6" of compacted subbase - same as above
- 8" asphalt (AC) - Type SP 12.5 Traffic Level C or higher

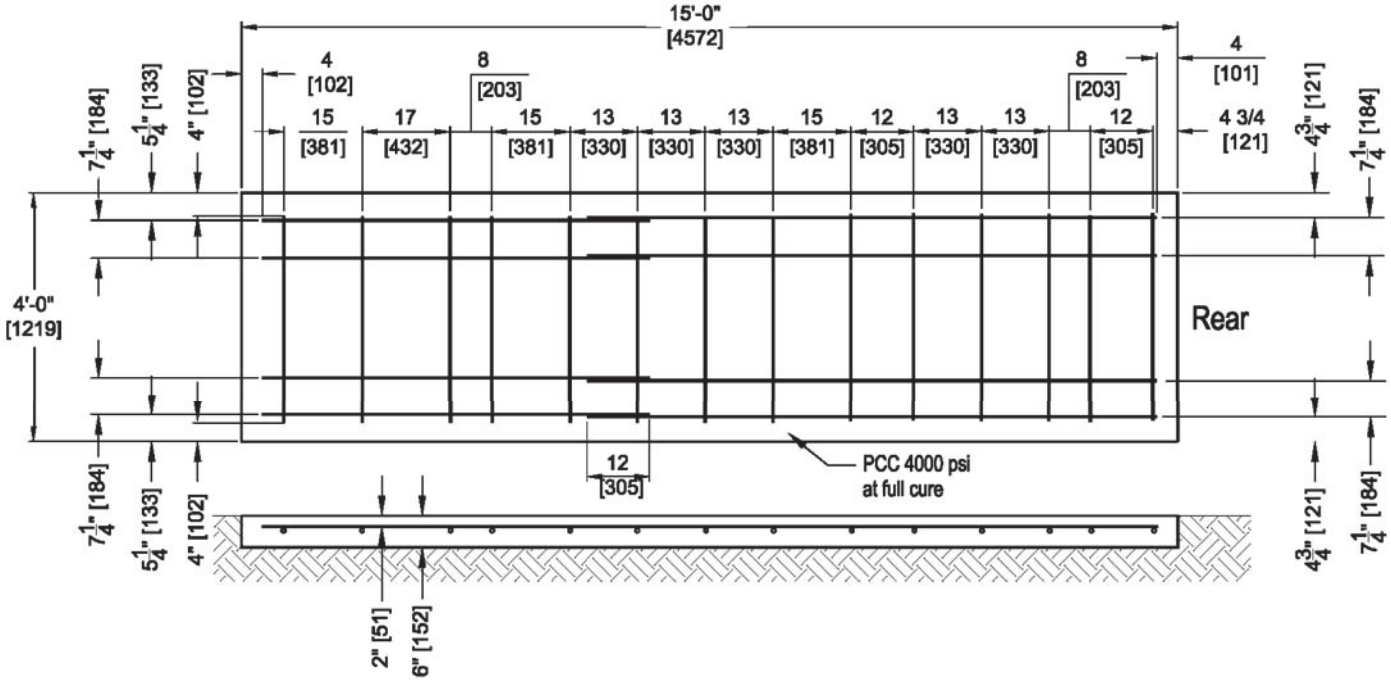

SCI70GM
Level 2 System

APPENDIX E2 - TEST LEVEL 3 FOUNDATION

Cross Slope at Top Surface not to Exceed 1 in 10
Foundation must be a Level Plane

* * * * * Wide Hazards and Transitions may require the foundation to be longer. See Transition Drawings.

SPECIFICATIONS

All reinforcing steel - straight #4 ASTM-A36

Embedment requirements:

- 6" reinforced concrete pad with anchor embedment of 5 1/2"
- 8" non-reinforced concrete pad with anchor embedment of 5 1/2"
- 3" asphalt over 3" concrete with anchor embedment of 16 1/2"
- 6" asphalt over 6" of compacted subbase with anchor embedment of 16 1/2"
- 8" asphalt with anchor embedment of 16 1/2"

The contractor shall furnish a certification for material installed to the following requirements:

- 6" reinforced concrete (PCC) sampling per ASTM C31-84, testing per ASTM C39-84
- 8" non-reinforced concrete (PCC) sampling per ASTM C31-84, testing per ASTM 39-84
- 3" asphalt over 3" concrete - Type SP 12.5 Level C or higher
- 6" asphalt over 6" of compacted subbase - same as above
- 8" asphalt (AC) - Type SP 12.5 Traffic Level C or higher

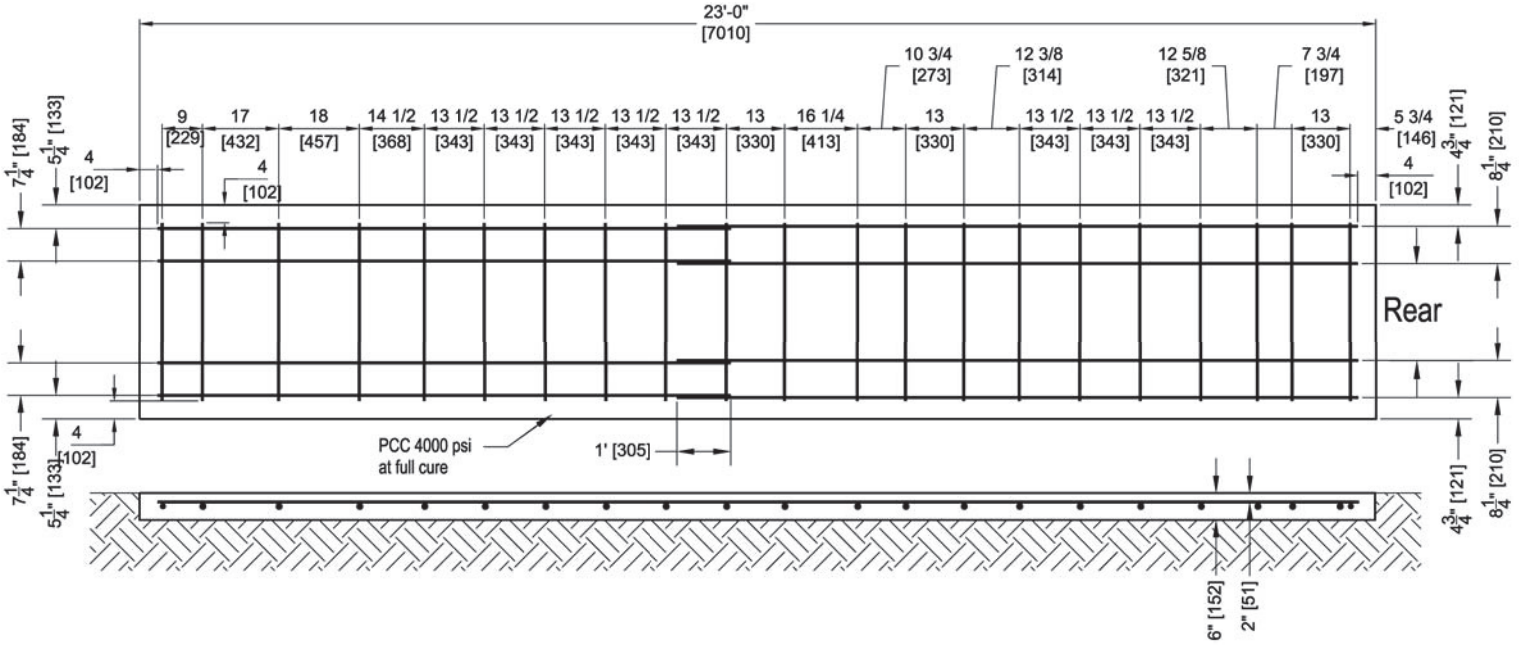

SCI100GM
Level 3 System

APPENDIX F - TRANSITION, GORE ASSEMBLY

PARTS LIST

Gore Assembly #9475
01 - Transition 10 Degree Flare Right #9467
01 - Transition 10 Degree Flare Left #9468
02 - Transition Concrete Spanner Brace #9469
03 - Transition Concrete #1 Spanner Brace #9470
04 - Transition Gore Tapered #1 Spanner Brace #9472
05 - Transition Gore Tapered #2 Spanner Brace #9473
06 - Thrie Beam Concrete Leg Brace #9474
07 - Thrie Beam Blockout (AASHTO PWB02)

***** SPLICE BOLTS AND GUARDRAIL SUPPLIED BY OTHERS*****

NOTES:
1) DIMENSIONS SHOWN ARE FOR 60" WIDTH
2) FOR EACH 1" OF WIDTH CHANGE, ADD OR SUBTRACT THE FOLLOWIING:
   2.88" [73.15mm] TO LENGTH OF GUARDRAIL
   2.84" [72.13mm] TO OVERAL LENGTH
3) ADD OR SUBTRACT ADDITIONAL POST ON EACH SIDE FOR EACH 13" [330mm] CHANGE IN WIDTH.
4) GUARDRAIL TERMINATION - YOU MUST ADD THE GUARDRAIL OVERLAP LENGTH AND TERMINATE PER STATE REGULATIONS.

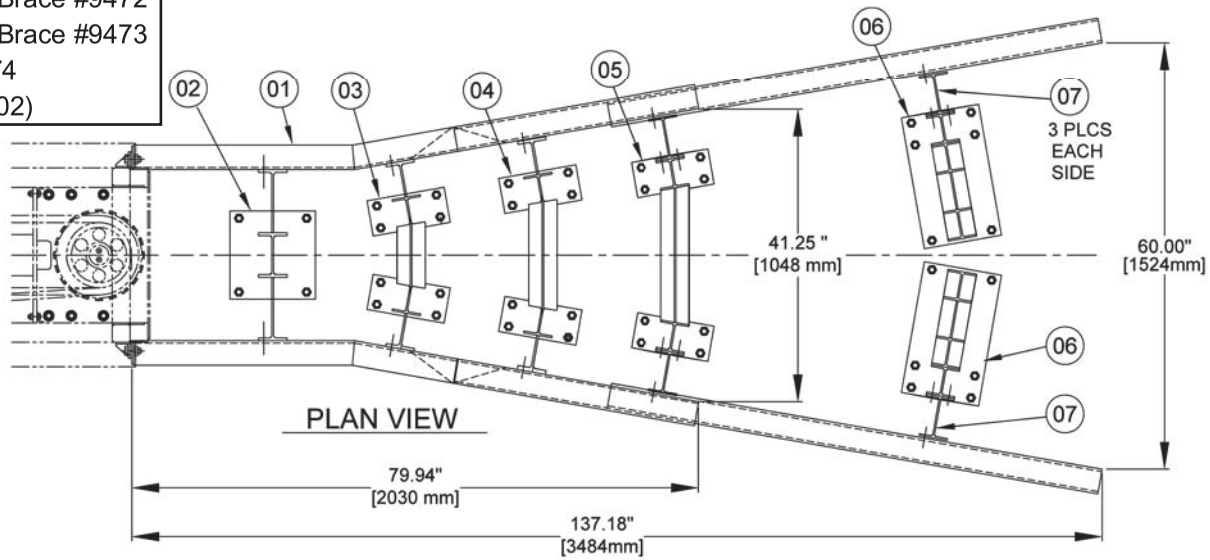

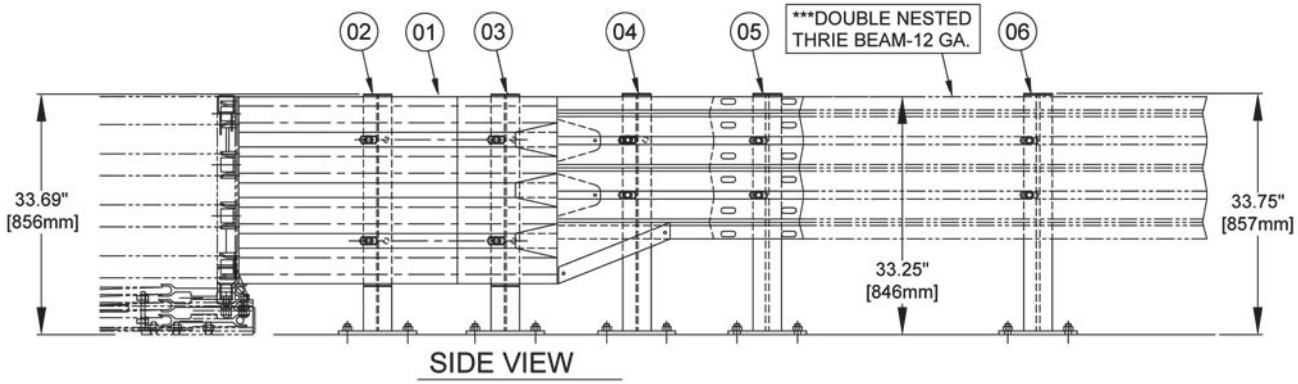

The use of the last brace will be determined by whether the Thrie Beam can be attached to the obstruction or not. If the Thrie Beam distance from the last brace is 40 inches or less and can be attached, you will not need a brace at the obstruction. If you cannot attach to the obstruction, you may need a brace and drill holes in the Thrie Beam at the furthest rearward location.

APPENDIX F(2) - TRANSITION. GORE ASSEMBLY

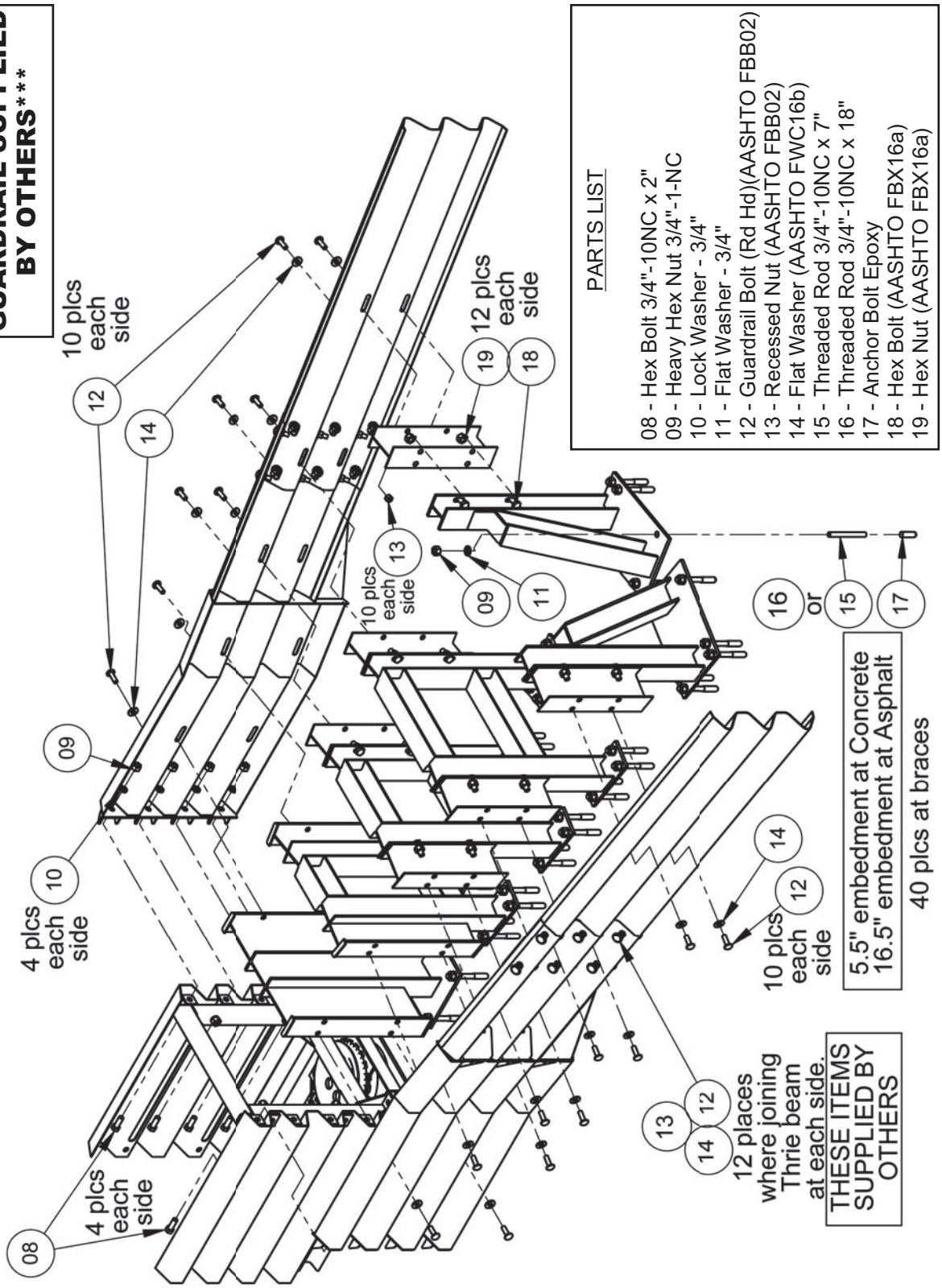

APPENDIX F(3) - TRANSITION. GORE ASSEMBLY CALCULATIONS

SCI GM WIDE TRANSITION CALCULATIONS

Guardrail

12.6" Splice overlap at Transition end

Must add length for barrier overlap and end termination per state specifications

Longitudinal distance increases 2.84" for each 1" increase in width

Thrie Beam Length increases 2.88" for each 1" increase in width

Gore Width Inches	Additional Long. Distance Inches	Additional Long. Distance Feet	Thrie Beam Length Inches	Overall System Length Feet	Additional Brace Count
41	79.2	6.6	12.6	28.1	All 4 Spanner Braces # 9469, 9470, 9472, 9473
48	99.1	8.3	32.8	29.8	All 4 Spanner Braces # 9469, 9470, 9472, 9473
55	118.9	9.9	52.9	31.4	Add 2-Thrie Beam Concrete Leg Brace #9474
60	133.1	11.1	67.3	32.6	Add 2-Thrie Beam Concrete Leg Brace #9474
68	155.8	13.0	90.4	34.5	Add 4-Thrie Beam Concrete Leg Brace #9474
69	158.6	13.2	93.2	34.7	Add 4-Thrie Beam Concrete Leg Brace #9474
81	192.7	16.1	127.8	37.6	Add 6-Thrie Beam Concrete Leg Brace #9474
88	212.5	17.7	148.0	39.2	Add 6-Thrie Beam Concrete Leg Brace #9474
94	229.5	19.1	165.2	40.6	Add 8-Thrie Beam Concrete Leg Brace #9474
100	246.5	20.5	182.5	42.1	Add 8-Thrie Beam Concrete Leg Brace #9474
107	266.4	22.2	202.7	43.7	Add 10-Thrie Beam Concrete Leg Brace #9474
112	280.6	23.4	217.1	44.9	Add 10-Thrie Beam Concrete Leg Brace #9474
120	303.3	25.3	240.1	46.8	Add 12-Thrie Beam Concrete Leg Brace #9474
126	320.3	26.7	257.4	48.2	Add 12-Thrie Beam Concrete Leg Brace #9474
133	340.1	28.3	277.6	49.9	Add 14-Thrie Beam Concrete Leg Brace #9474

APPENDIX G - TRANSITION, JERSEY/F SHAPE BARRIER

PARTS LIST

01 - Transition Jersey Barrier Right #9431
02 - Transition Jersey Barrier Left #9432

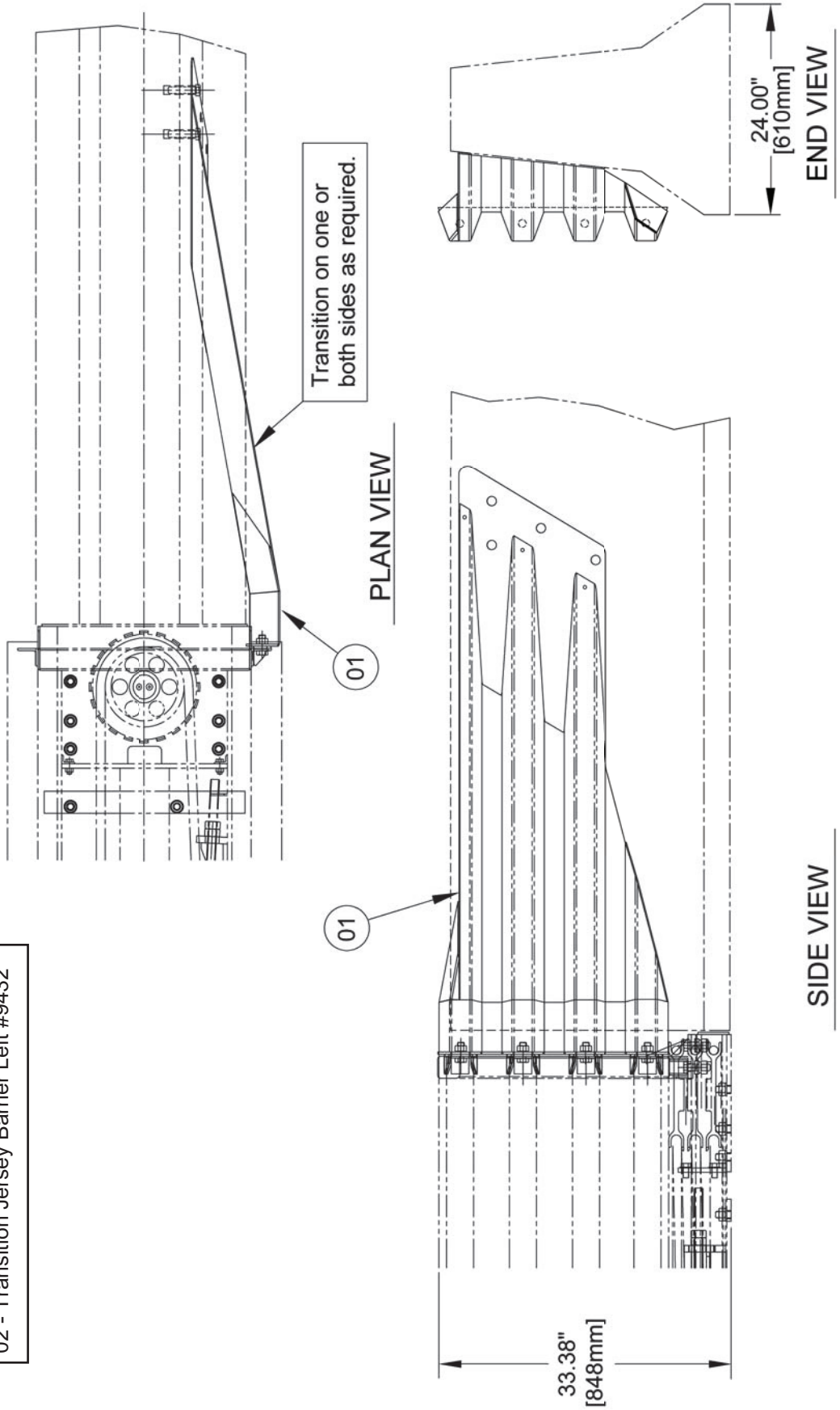

APPENDIX G(2) - TRANSITION, JERSEY/F SHAPE BARRIER

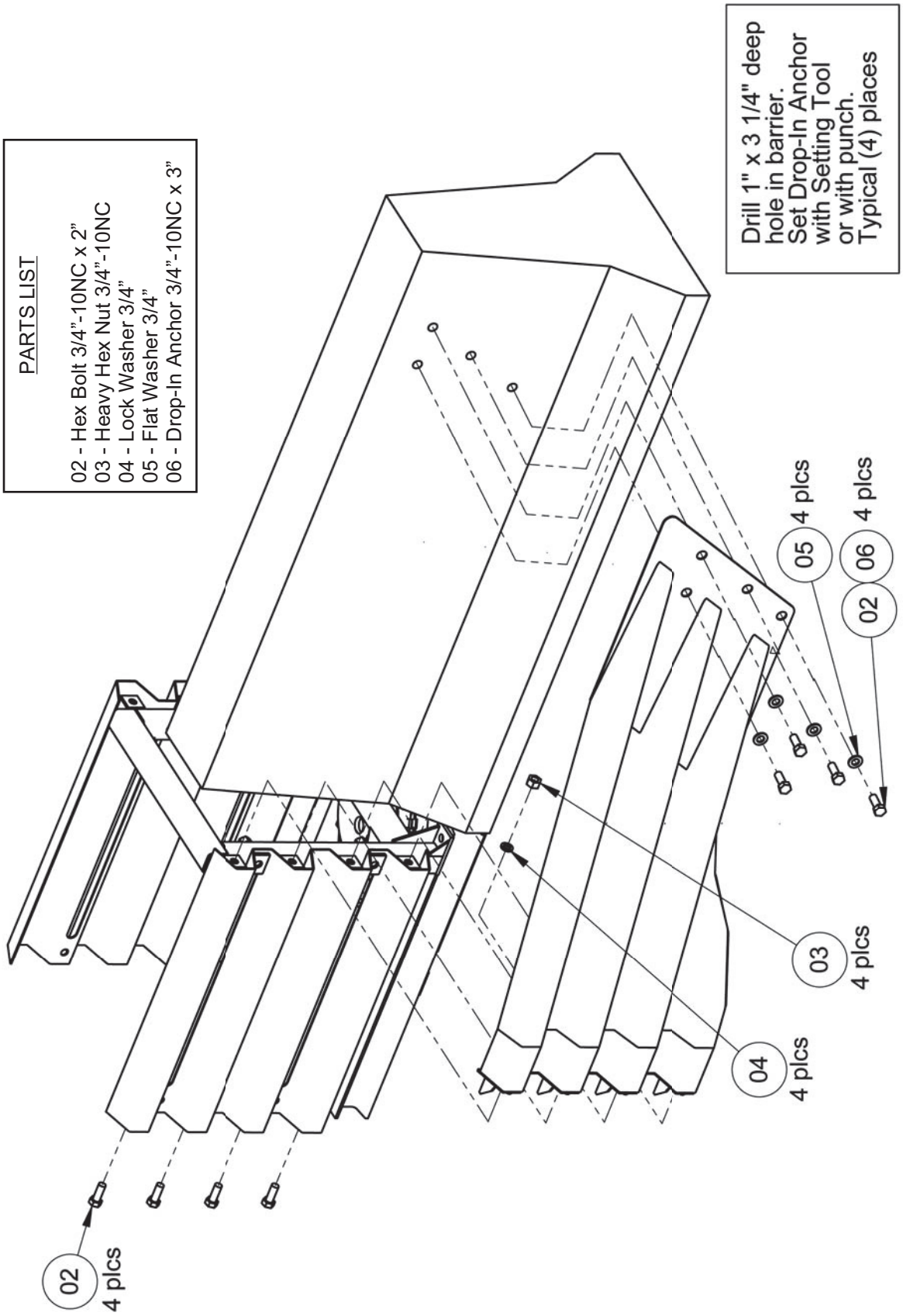

APPENDIX H - TRANSITION, CONCRETE BLOCK, 24 INCH (610mm)

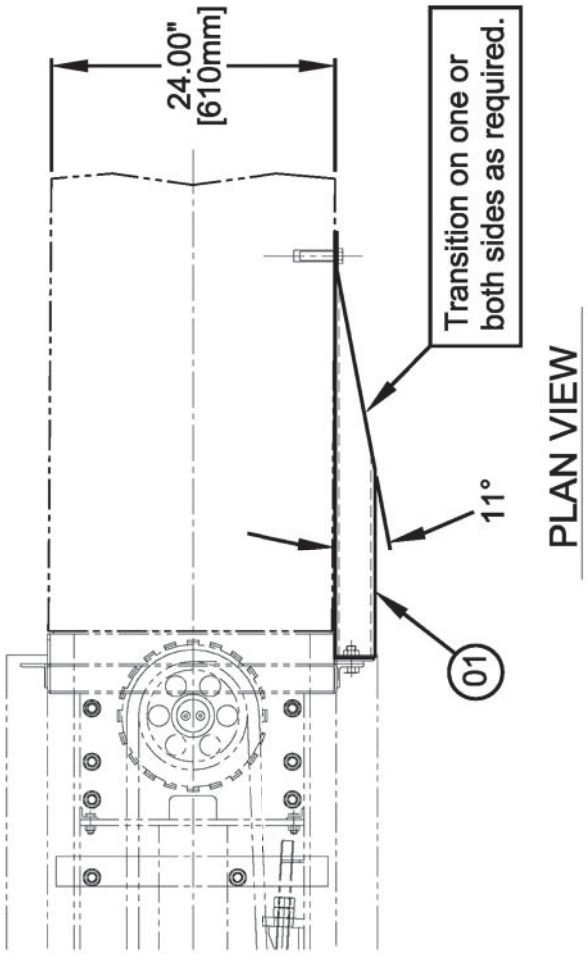

PLAN VIEW

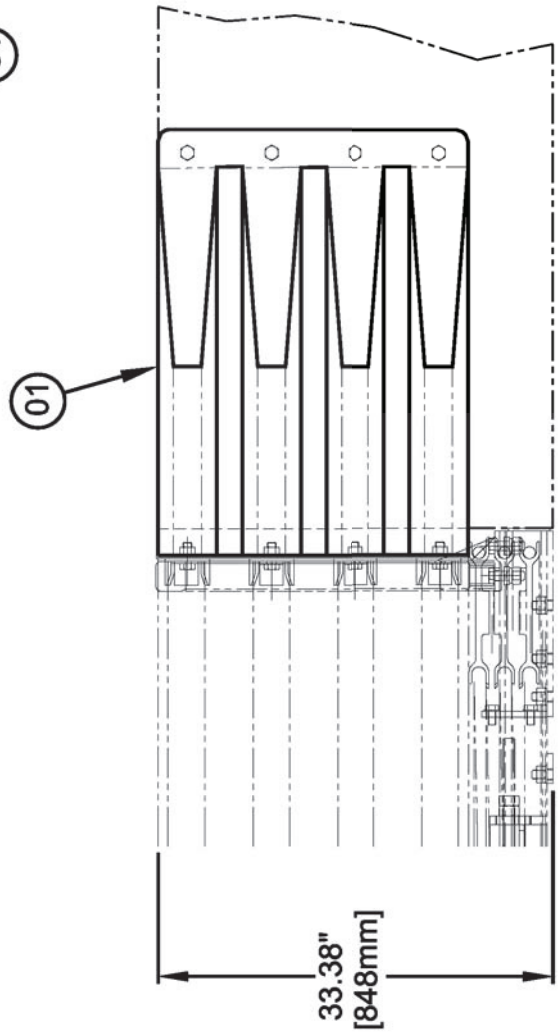

SIDE VIEW

PARTS LIST

01 - Transition Concrete Block Right or Left #9433

APPENDIX H(2) - TRANSITION, CONCRETE BLOCK, 24 INCH (610mm)

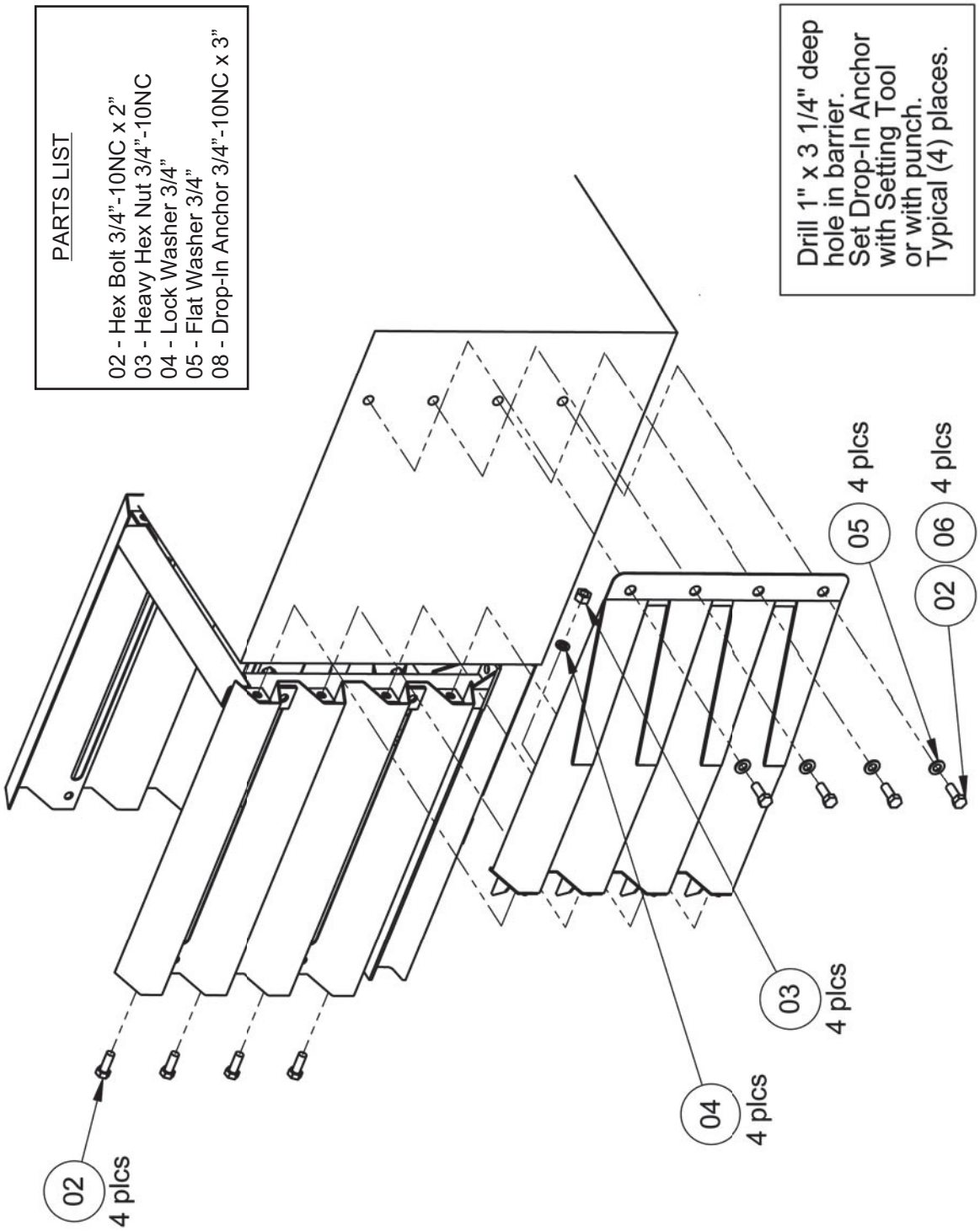

APPENDIX I - TRANSITION, CONCRETE BLOCK, 30 INCH (762mm)

PARTS LIST

Two Sided Full Assembly #9459
01 - Transition 30" Concrete Straight Connection #9463
02 - Transition Concrete Spanner Brace #9469

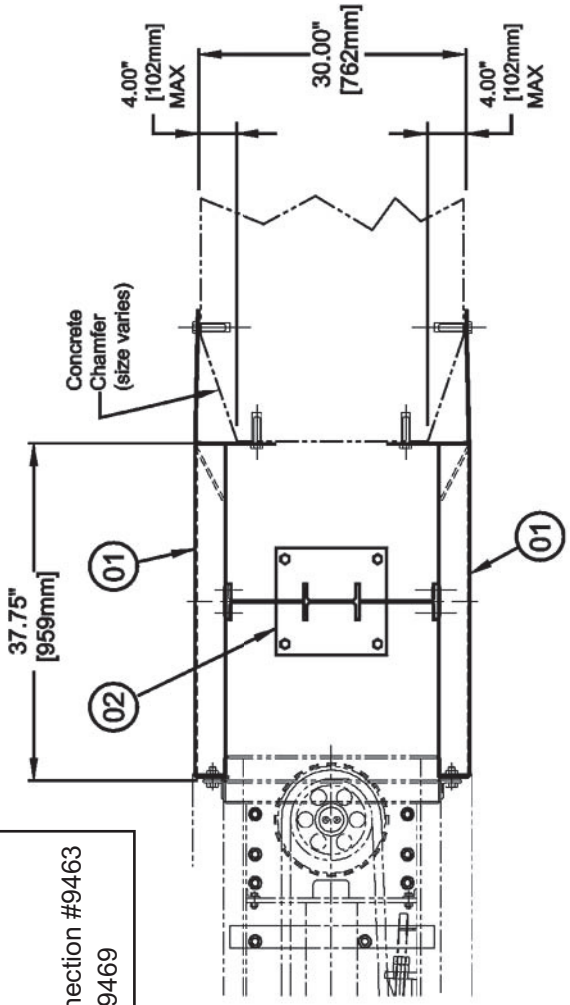

USED FOR:
1. Unchamfered Concrete Block
2. Chamfered Concrete Block ***
*** Chamfer limited to <4"

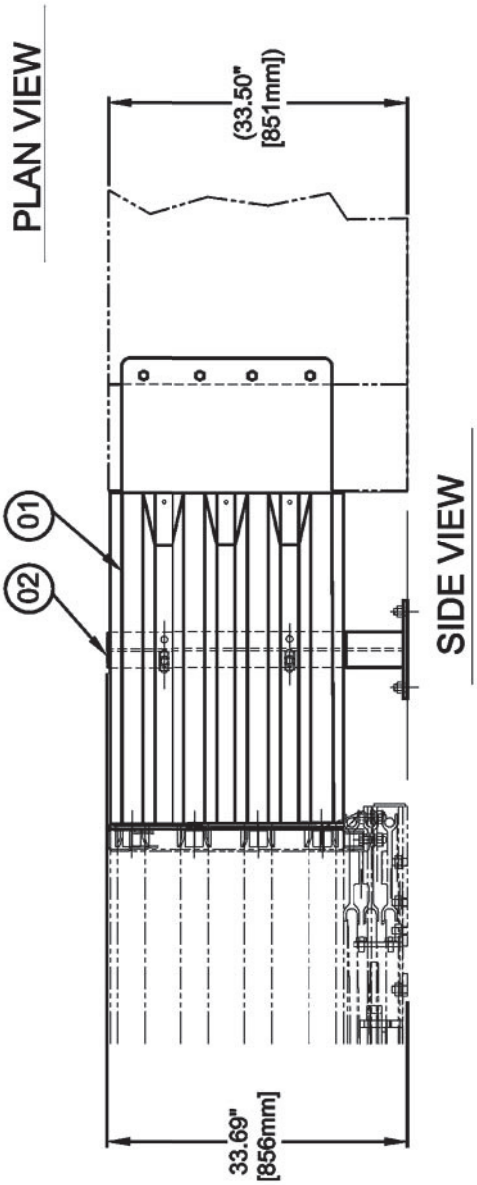

APPENDIX I(2) - TRANSITION, CONCRETE BLOCK, 30 INCH (762mm)

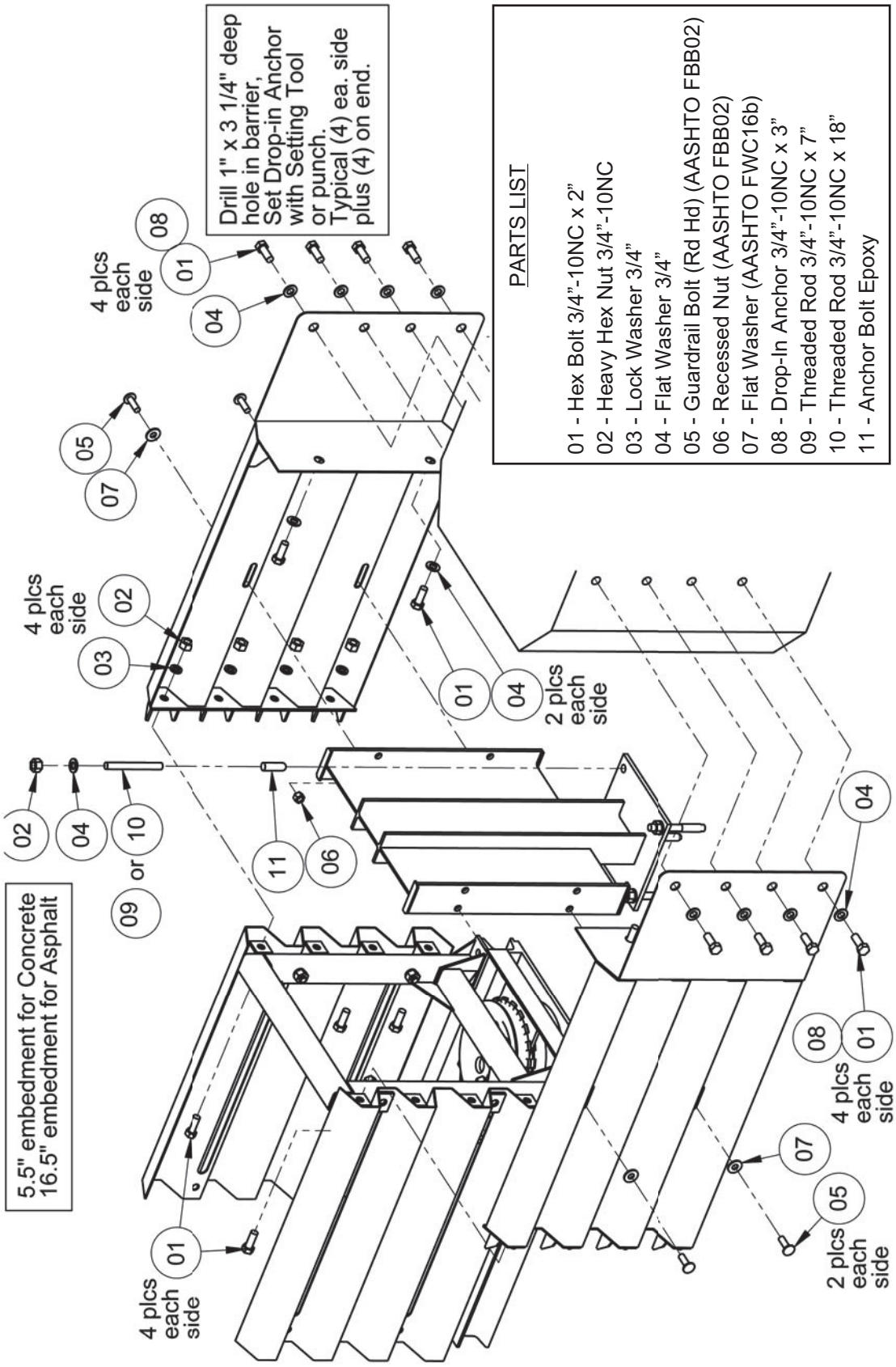

APPENDIX J - TRANSITION, CONCRETE BLOCK, 36 INCH (915mm)

PARTS LIST

Two Sided Full Assembly #9460
01 - Transition 36" Concrete Straight Connection #9464
02 - Transition Concrete Spanner Brace #9469
03 - Transition Concrete #1 Spanner Brace #9470

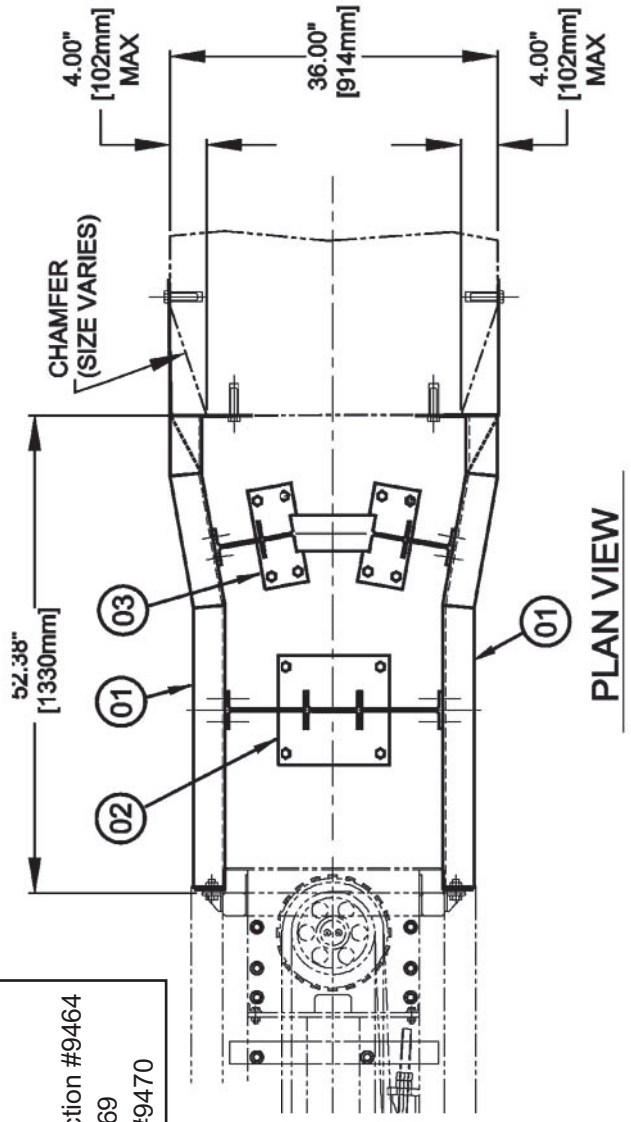

USED FOR:
1. Unchamfered Concrete Block
2. Chamfered Concrete Block ***

***Chamfer limited to <4"

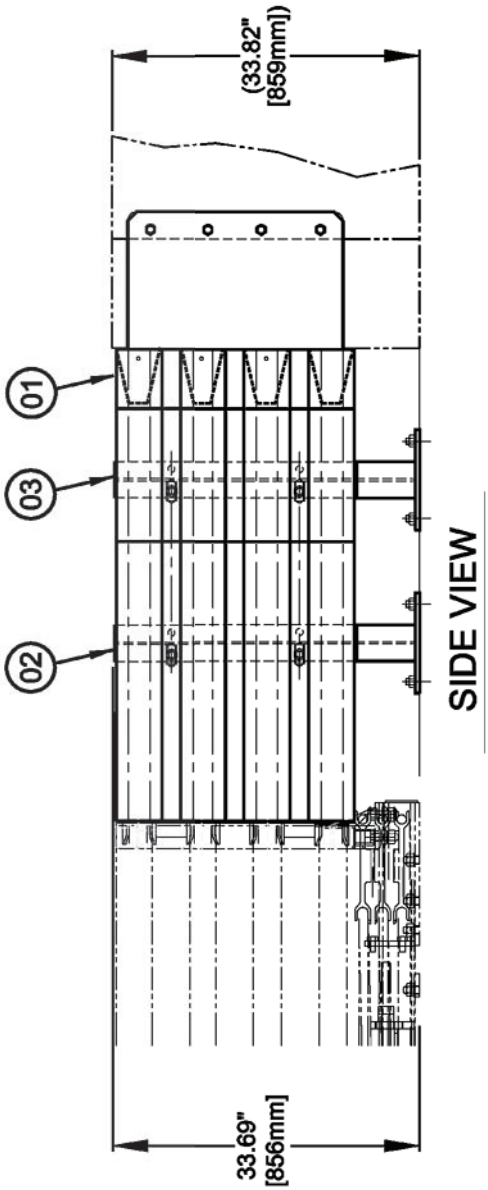

APPENDIX J2 - TRANSITION, CONCRETE BLOCK, 36 INCH (915mm)

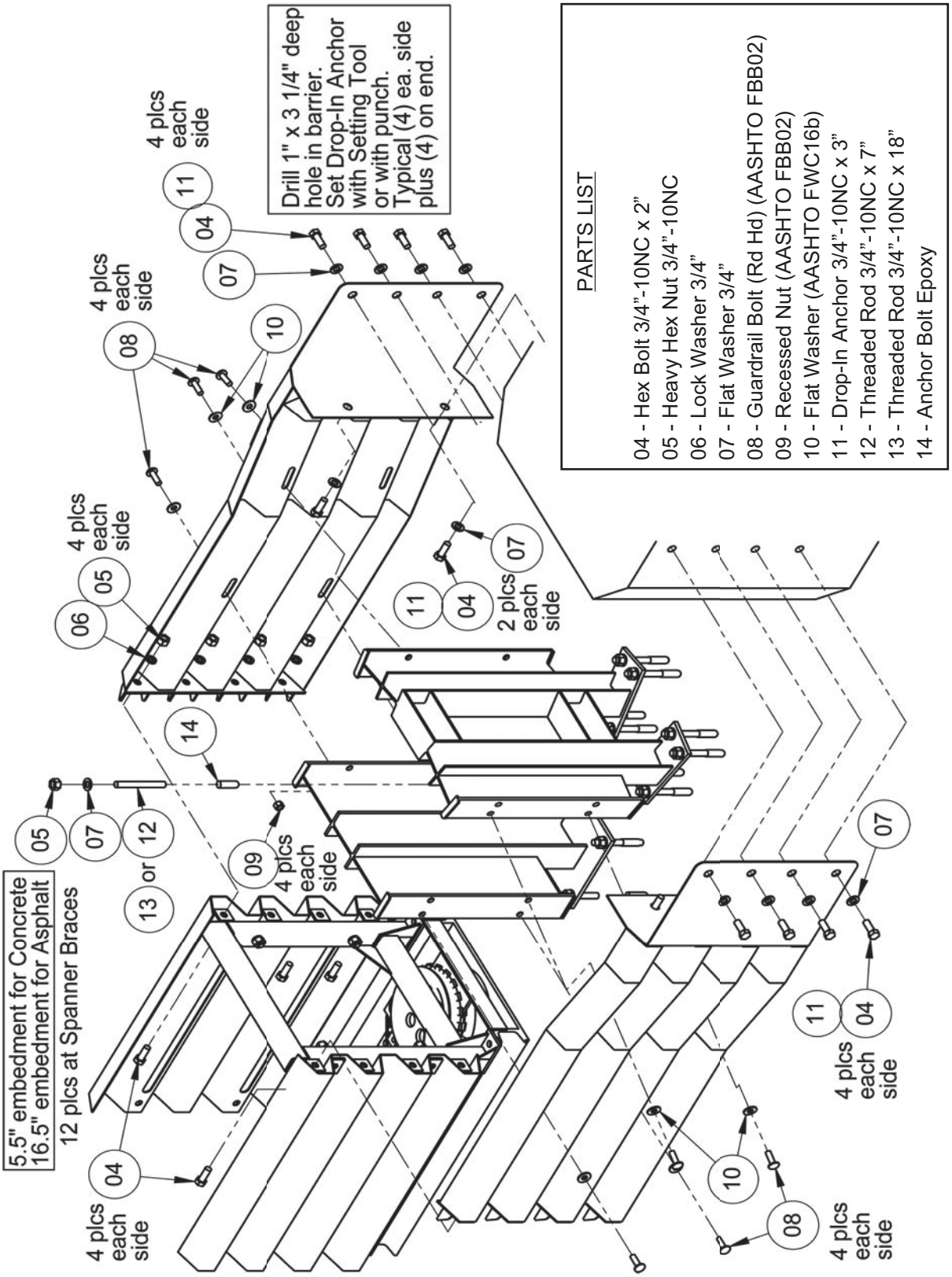

APPENDIX K - TRANSITION, CONCRETE BLOCK, 30 INCH (762mm) FLARED

PARTS LIST

Two Sided Full Assembly #9461
01 - Transition 30" Concrete Outside Connection #9465
02 - Transition Concrete Spanner Brace # 9469
03 - Transition Concrete #1 Tapered Spanner Brace #9470

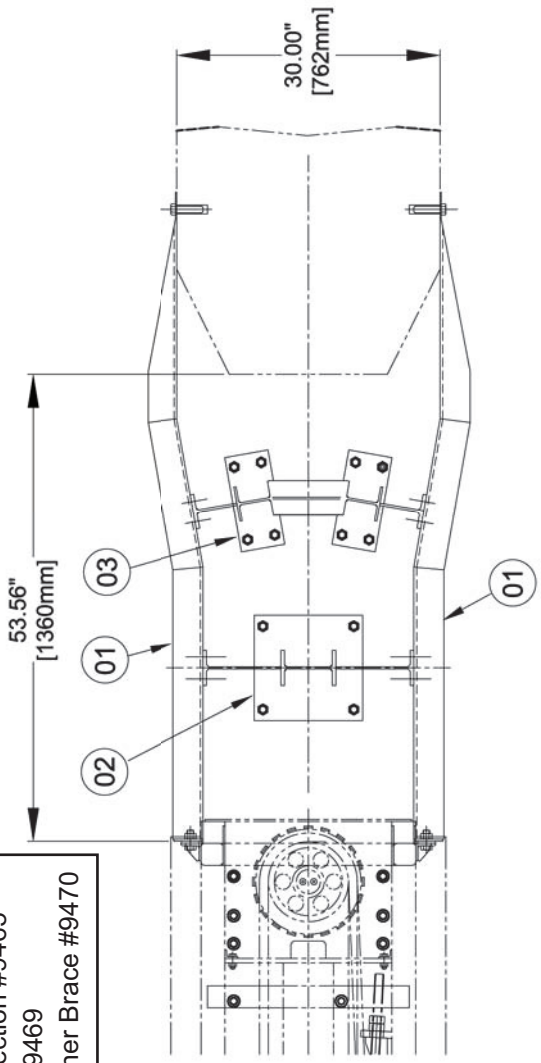

PLAN VIEW

USED FOR:
1. Unchamfered Concrete Block
2. Chamfered Concrete Block ***
*** Chamfer limited to <4"

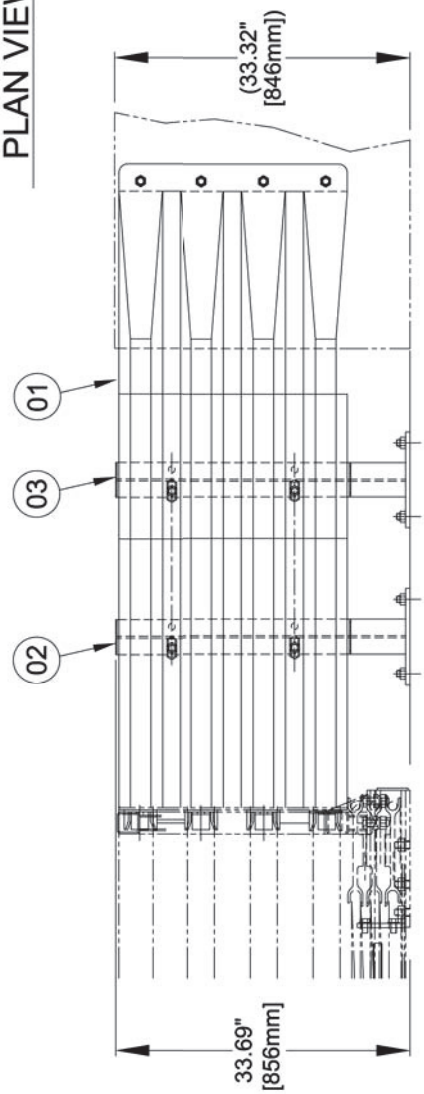

SIDE VIEW

APPENDIX K(2) - TRANSITION, CONCRETE BLOCK, 30 INCH (762mm) FLARED

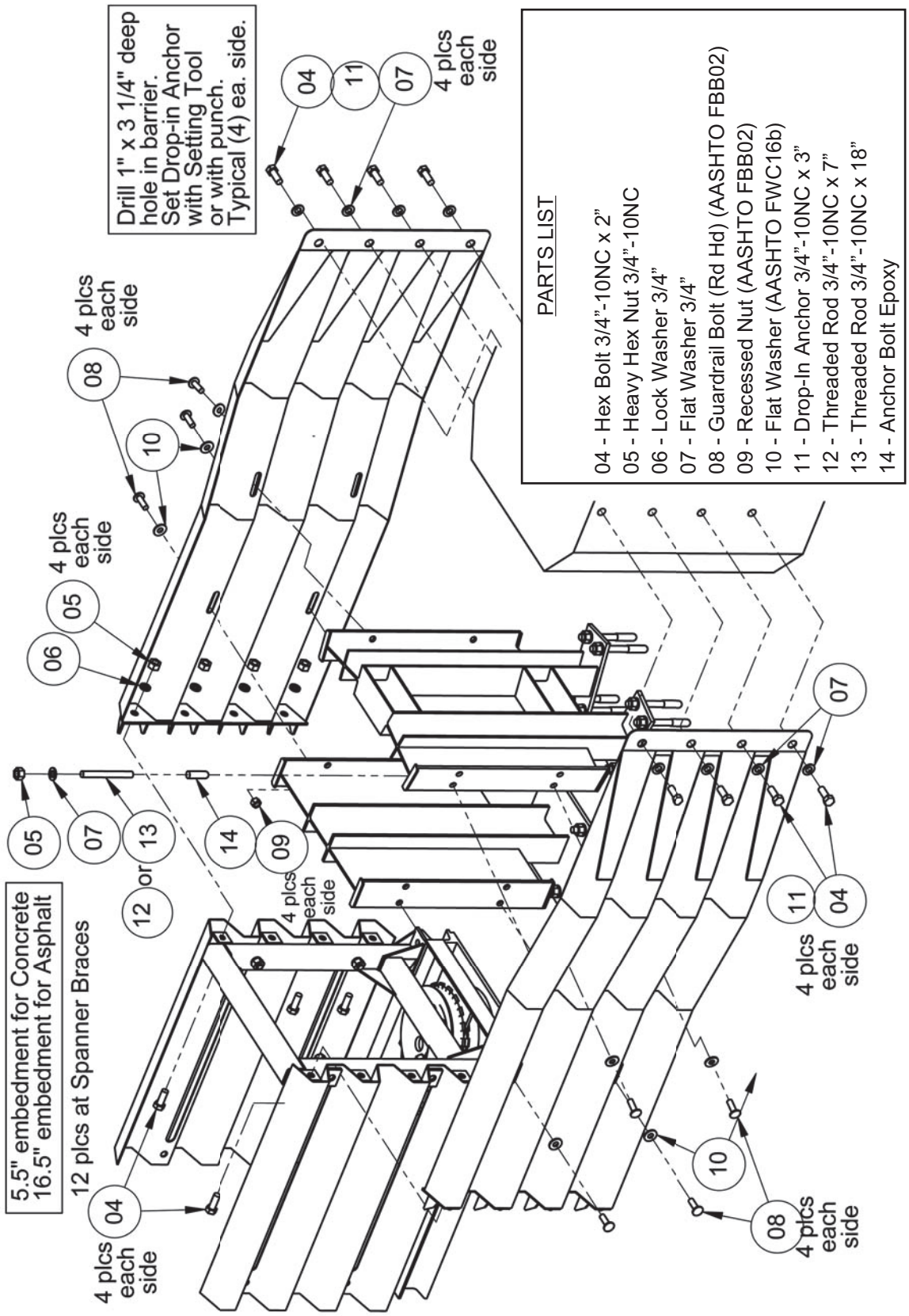

APPENDIX L - TRANSITION, CONCRETE BLOCK, 36 INCH (915mm) FLARED

PARTS LIST

Two Sided Full Assembly #9462
01 - Transition 36" Concrete Outside Connection #9466
02 - Transition Concrete Spanner Brace # 9469
03 - Transition Concrete #1 Tapered Spanner Brace #9470
04 - Transition Concrete #2 Tapered Spanner Brace #9471

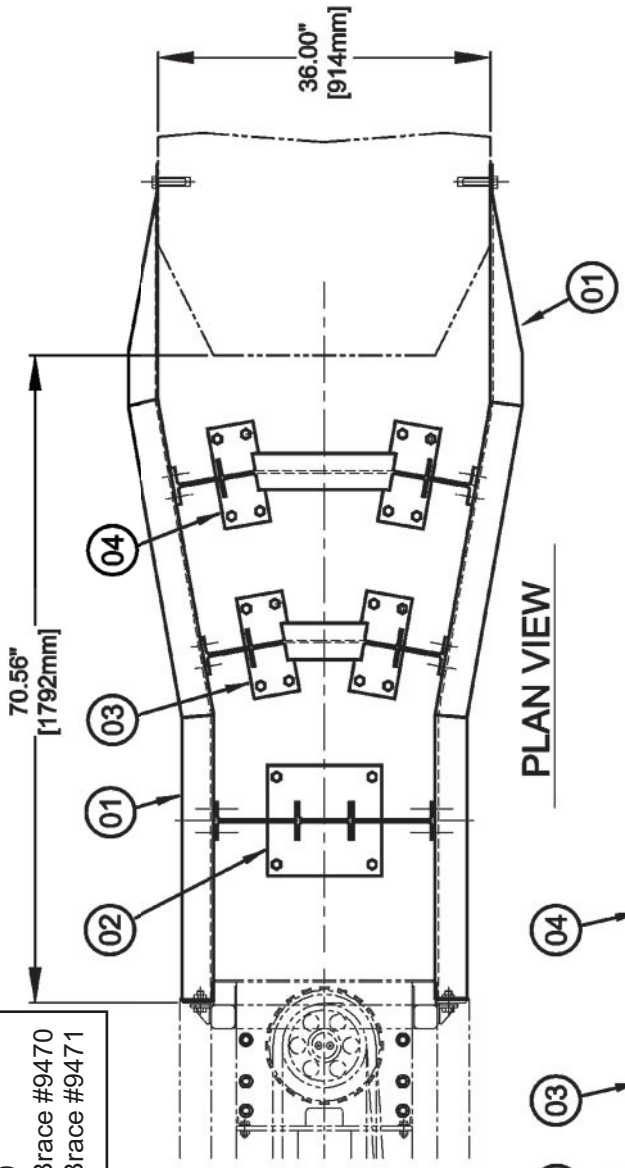

PLAN VIEW

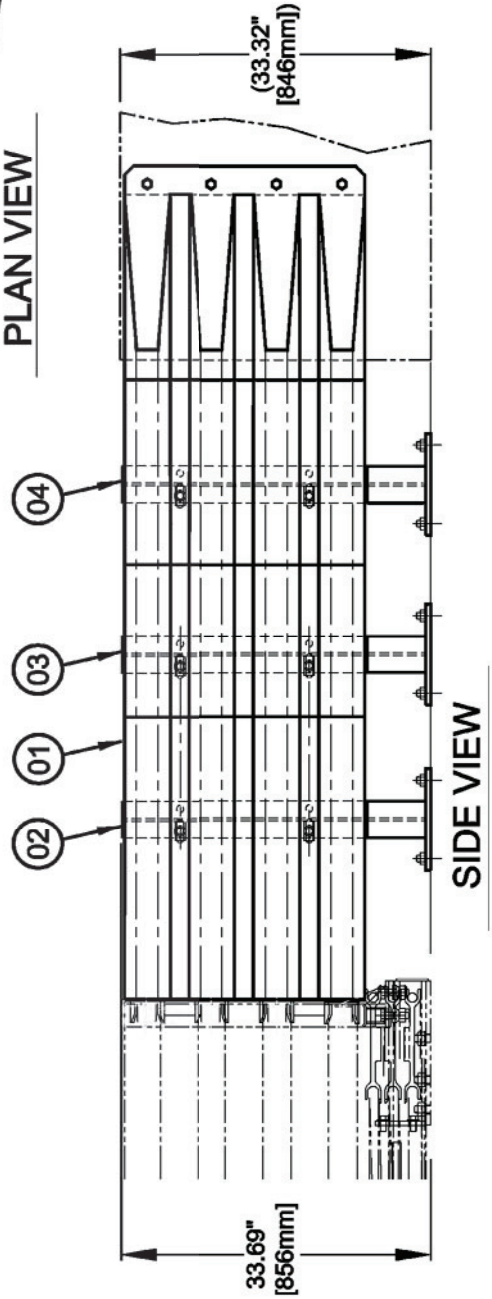

SIDE VIEW

APPENDIX L(2) - TRANSITION, CONCRETE BLOCK, 36 INCH (915mm) FLARED

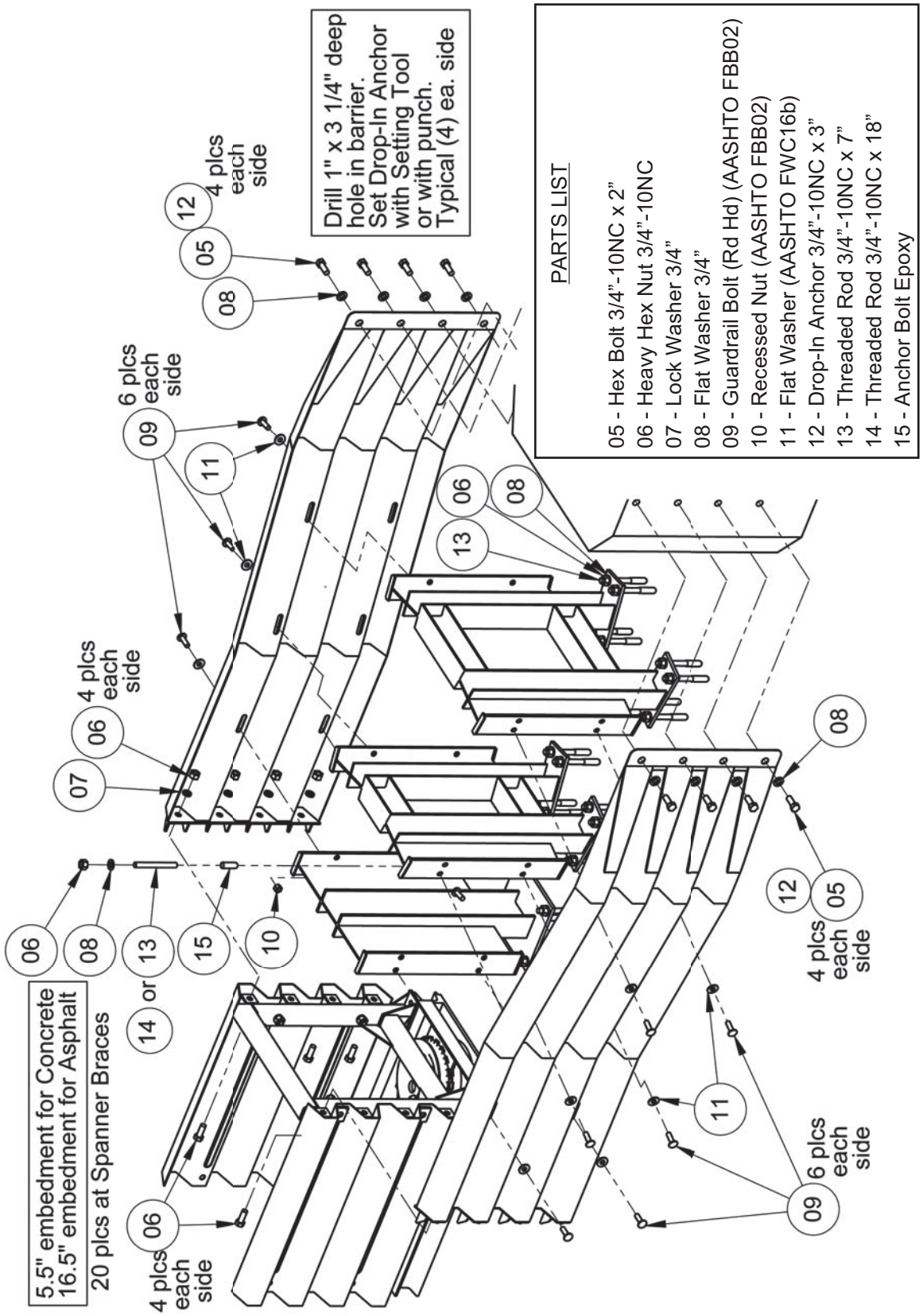

APPENDIX M - TRANSITION, THRIE BEAM

*****GUARDRAILS, POSTS, BLOCKOUTS AND CONNECTION BOLTS SUPPLIED BY OTHERS*****

PARTS LIST

01 - Transition Thrie & W Beam - Right #9437
01 - Transition Thrie & W Beam - Left #9438

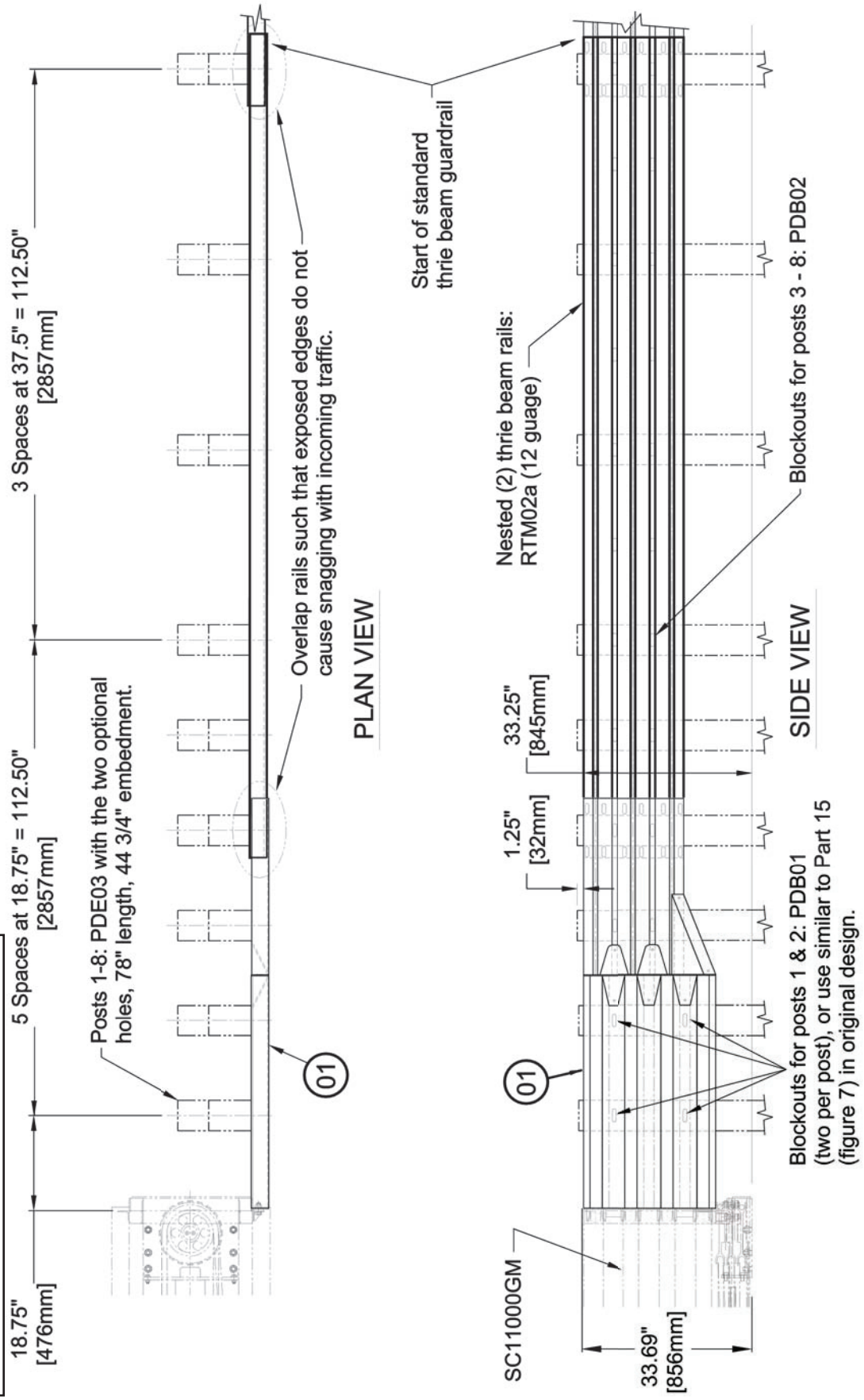

APPENDIX M(2) - TRANSITION, THRIE BEAM

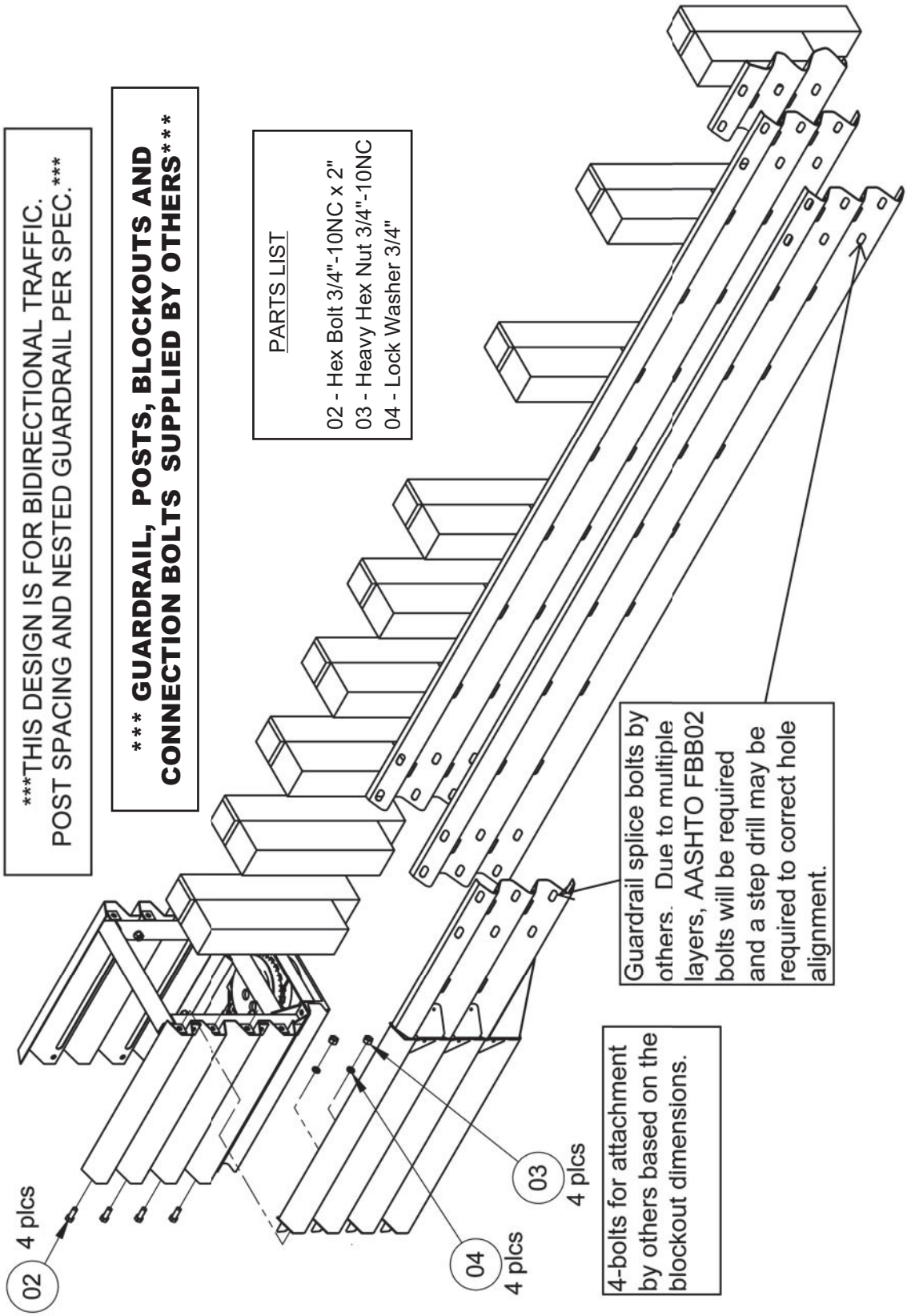

APPENDIX N - TRANSITION, W BEAM
*****FOR USE WITH REVERSE DIRECTION TRAFFIC *****

PARTS LIST

01 - Transition Thrie & W Beam - Right #9437
01 - Transition Thrie & W Beam - Left #9438

***** GUARDRAIL, POSTS, BLOCKOUTS AND CONNECTION BOLTS SUPPLIED BY OTHERS*****

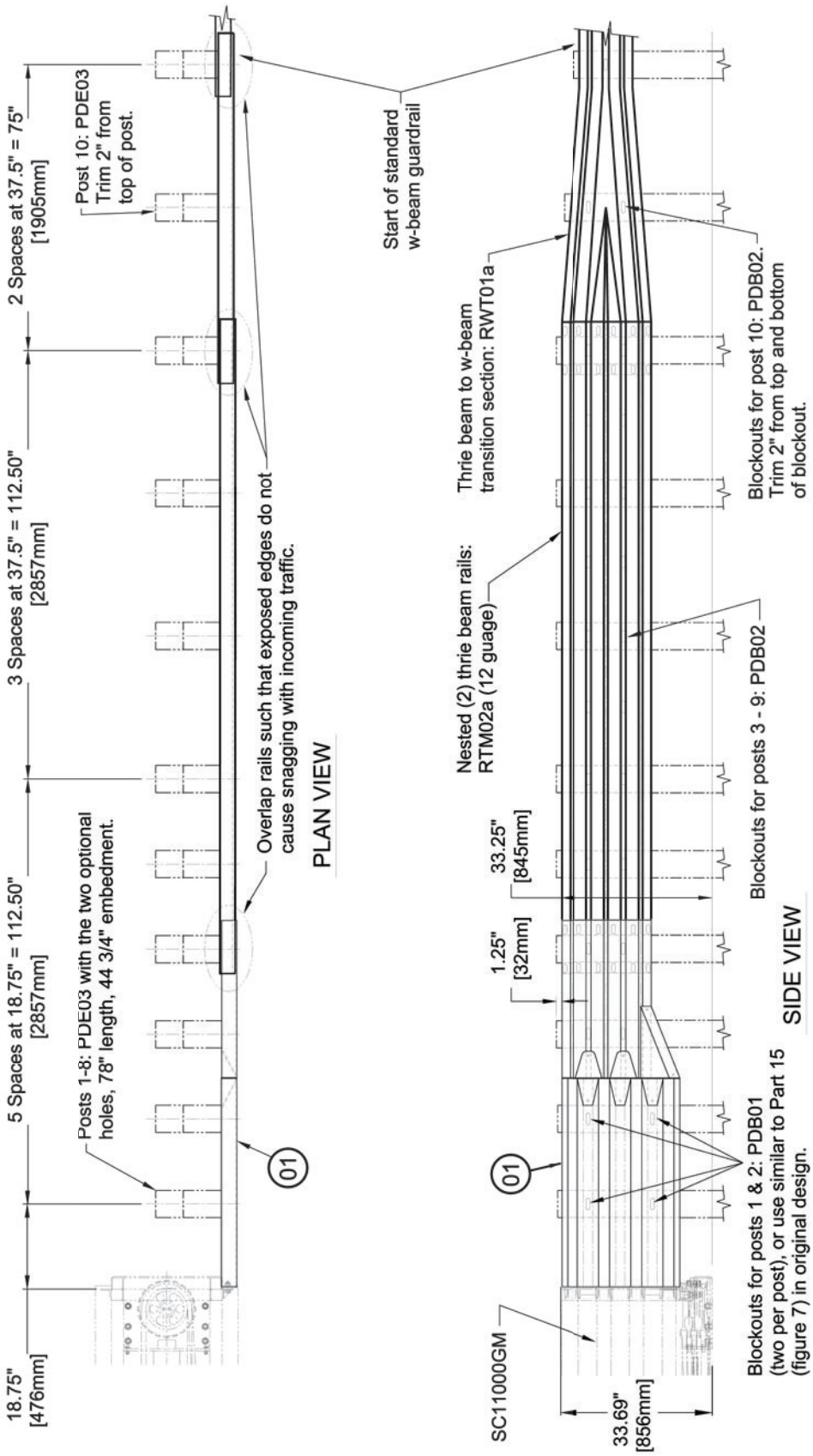

APPENDIX N(2) - TRANSITION, W BEAM

***THIS DESIGN IS FOR BIDIRECTIONAL TRAFFIC.
POST SPACING AND NESTED GUARDRAIL PER SPEC.***

***** GUARDRAIL POSTS, BLOCKOUTS AND CONNECTION BOLTS SUPPLIED BY OTHERS*****

PARTS LIST

02 - Hex Bolt 3/4"-10NC x 2"
03 - Heavy Hex Nut 3/4"-10NC
04 - Lock Washer 3/4"

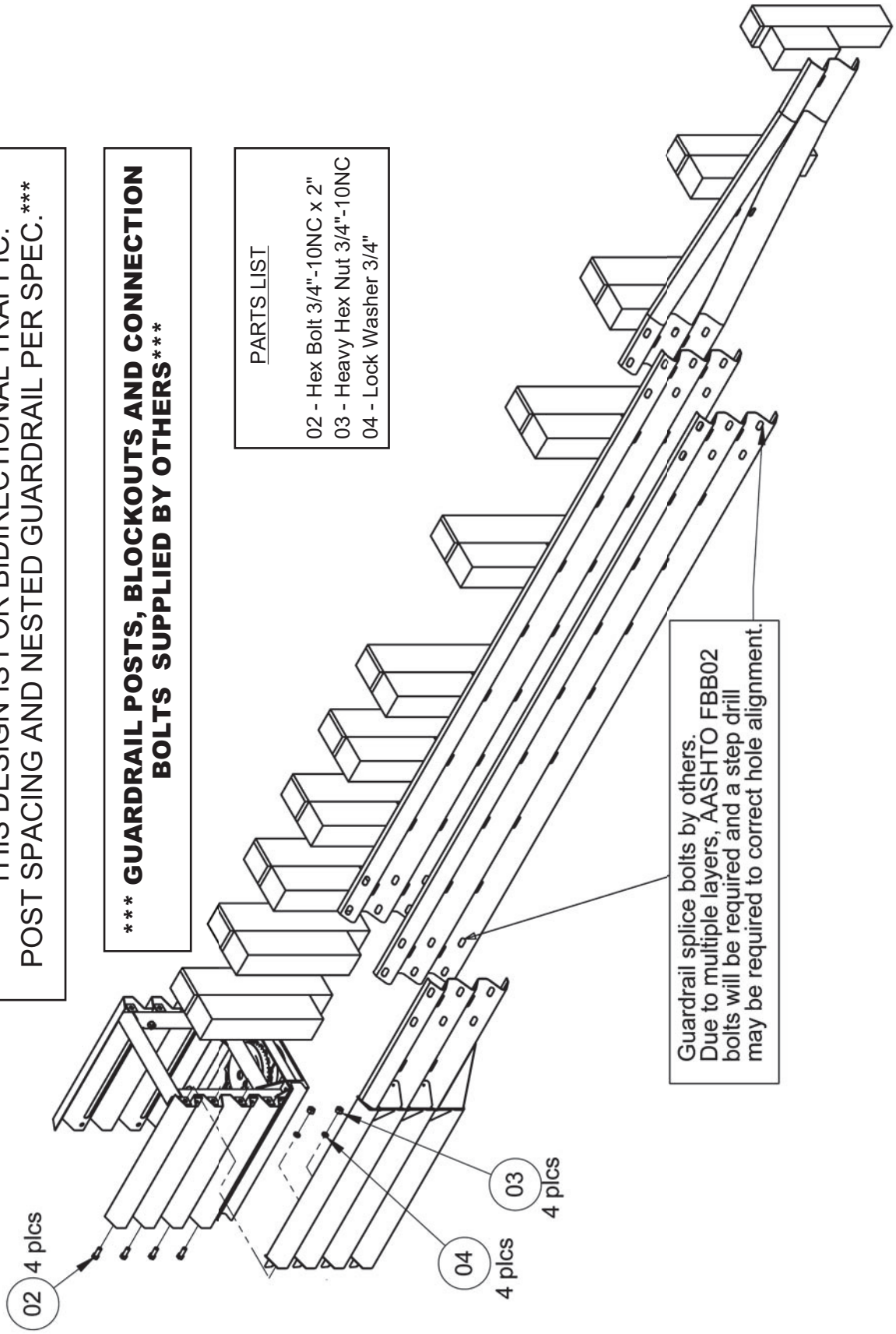

APPENDIX O - TRANSITION, JERSEY/F SHAPE, VARIABLE WIDTH BASE

PARTS LIST

Double Sided Median Base 30"-38" Base:
Two Sided Full Assembly
With Rub Rail #9528
Without Rub Rail #9535
01 - Transition - Left #9494
02 - Transition - Right #9493
03 - Transition Rub Rail - Left #9481
04 - Transition Rub Rail - Right #9480
05 - Transition Support Bracket - Right #9526
06 - Transition Support Bracket - Left #9527

For use with barriers with base widths of 30"-38"
Rub rails only required for base widths > 34"

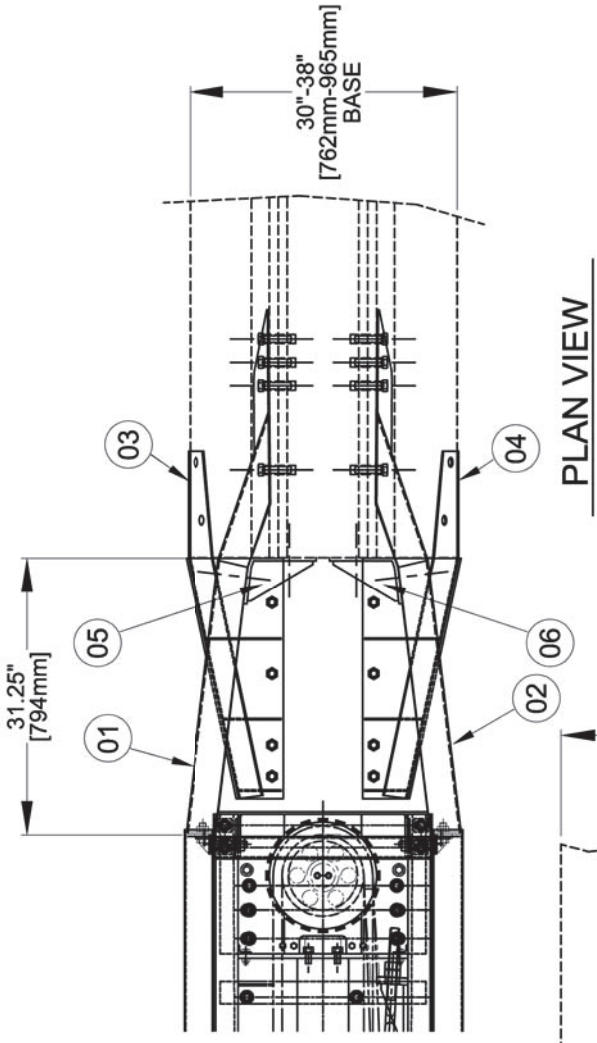

PLAN VIEW

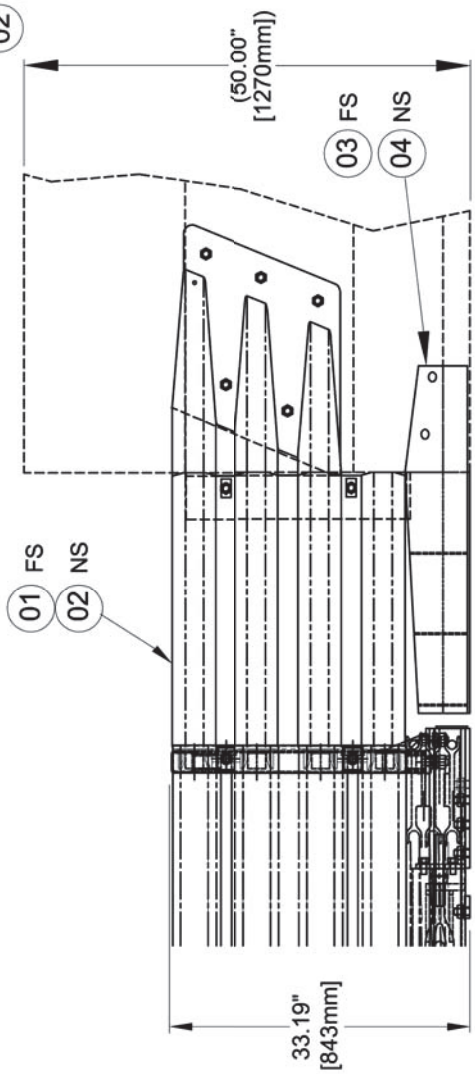

SIDE VIEW

APPENDIX O(2) - TRANSITION, JERSEY/F SHAPE, VARIABLE WIDTH BASE

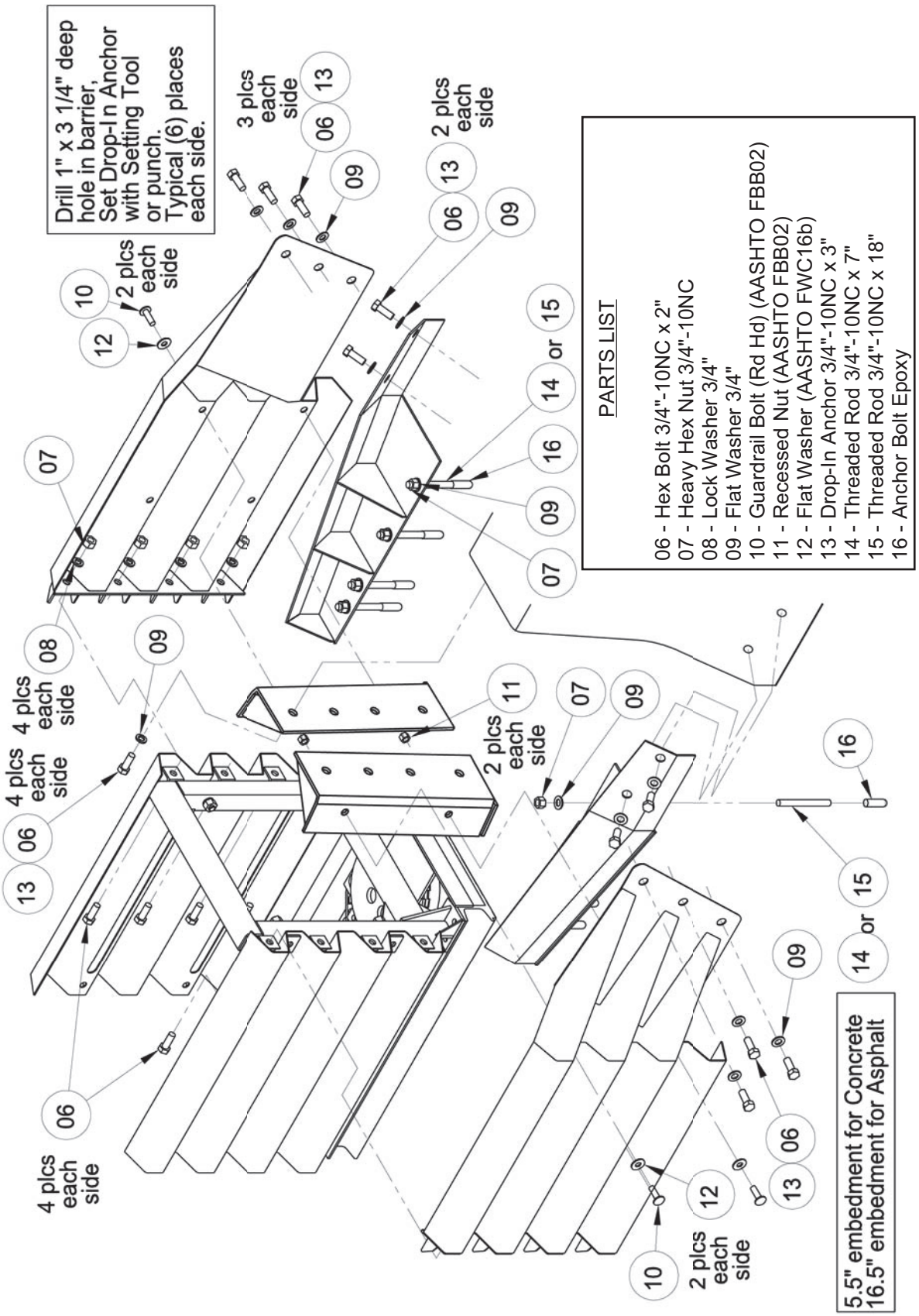

APPENDIX P - TRANSITION, MEDIAN BARRIER, SINGLE SLOPE

PARTS LIST

01 - Transition Single Slope Barrier - Right #9490
01 - Transition Single Slope Barrier - Left #9491

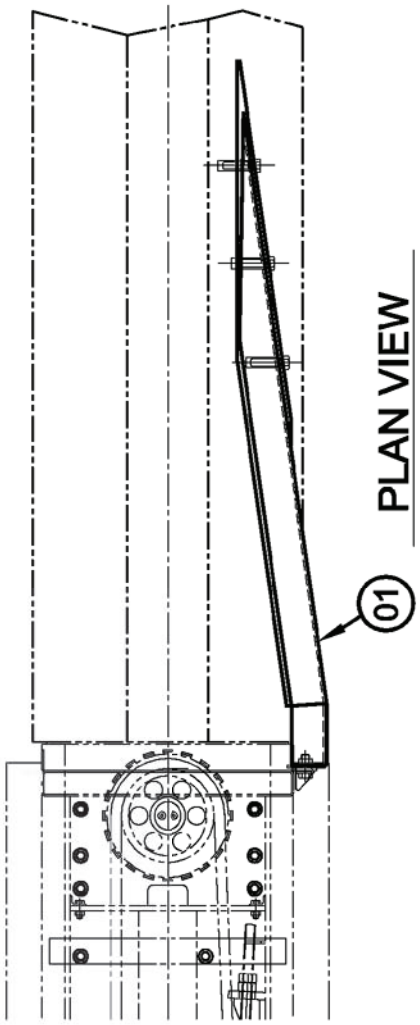

PLAN VIEW

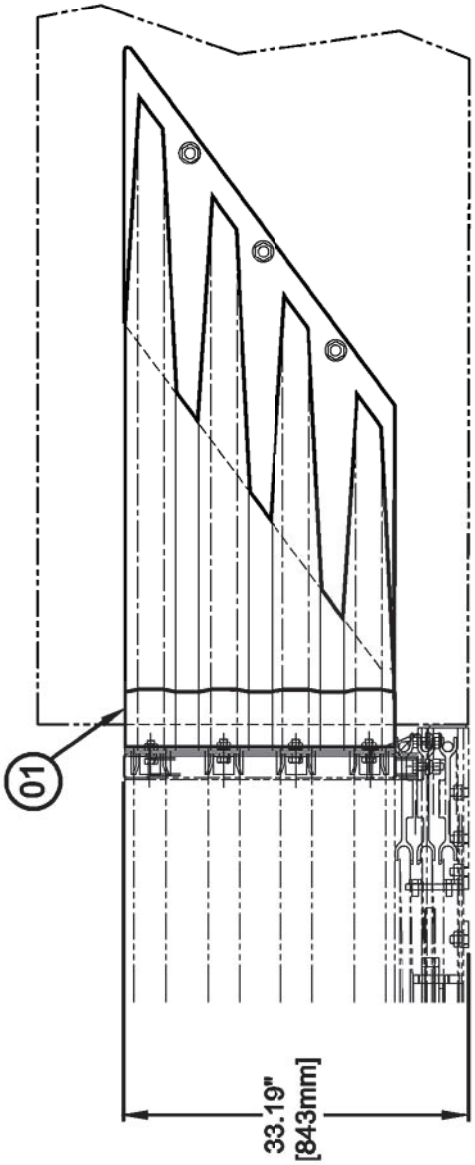

SIDE VIEW

APPENDIX P(2) - TRANSITION, MEDIAN BARRIER, SINGLE SLOPE

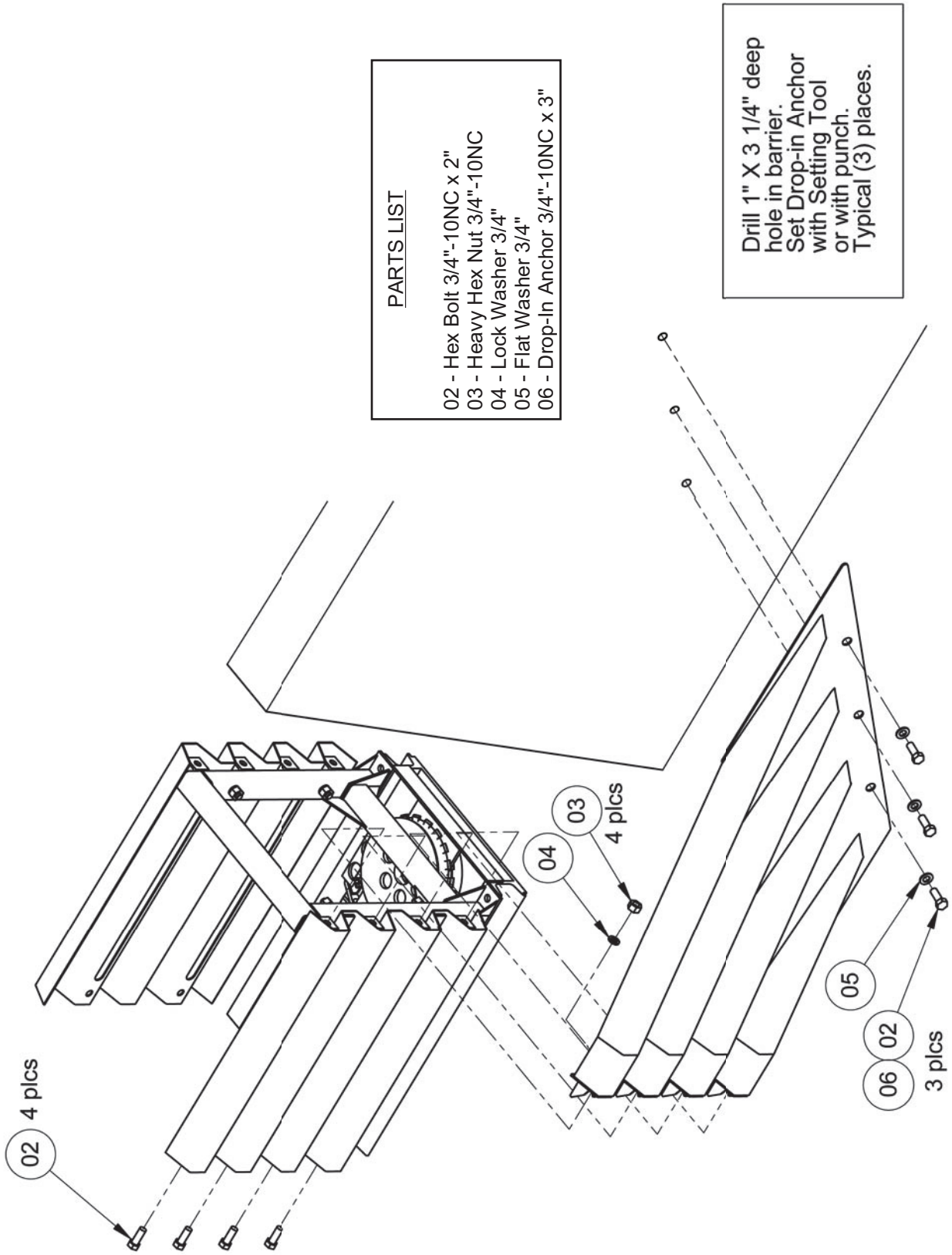

APPENDIX Q - TRANSITION, W - BEAM 28 INCH HIGH
*****FOR USE WITH NO REVERSE DIRECTION TRAFFIC *****

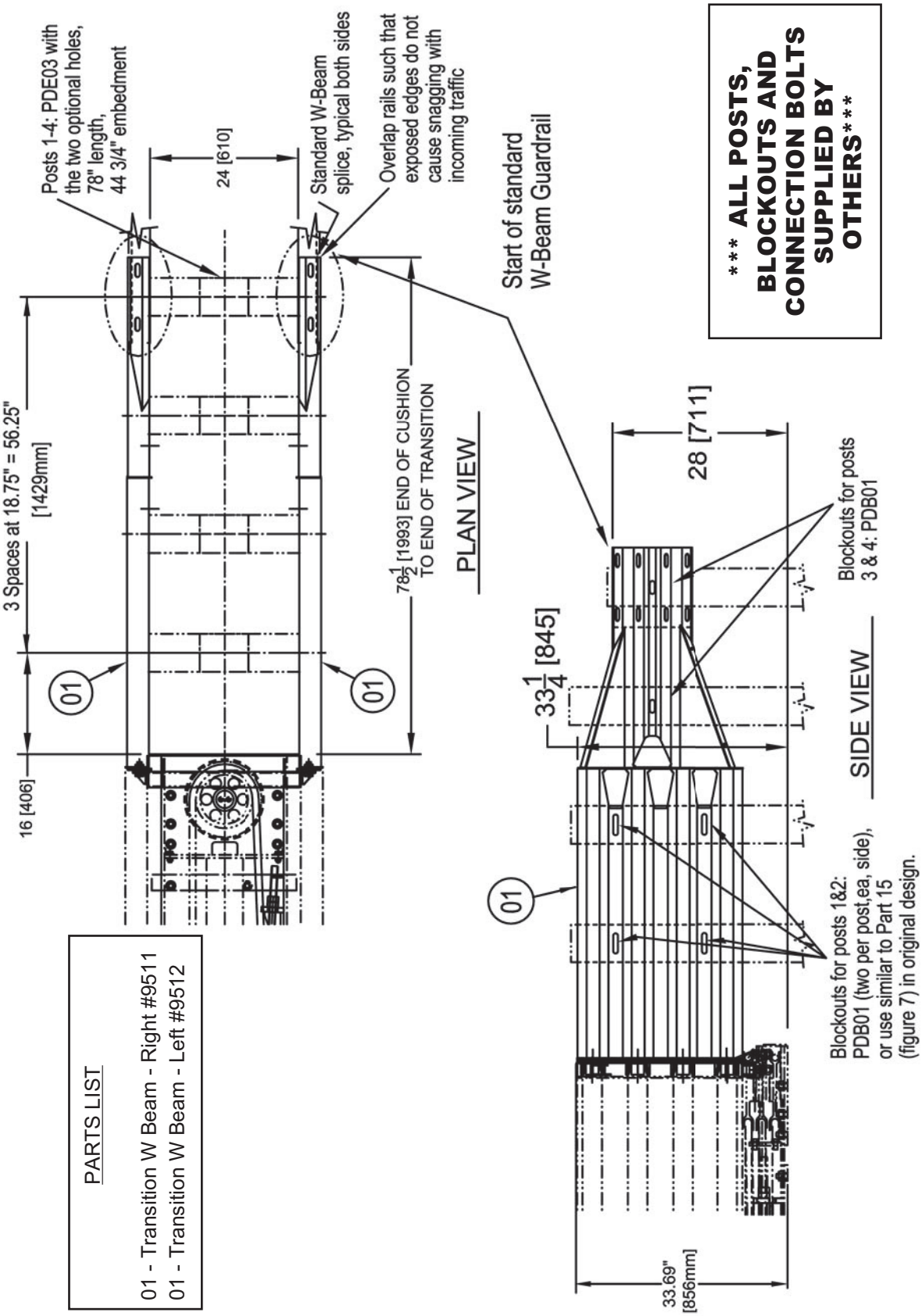

***** ALL POSTS, BLOCKOUTS AND CONNECTION BOLTS SUPPLIED BY OTHERS*****

PARTS LIST

01 - Transition W Beam - Right #9511
01 - Transition W Beam - Left #9512

APPENDIX R - TRANSITION, W - BEAM 32 INCH HIGH
*****FOR USE WITH NO REVERSE DIRECTION TRAFFIC *****

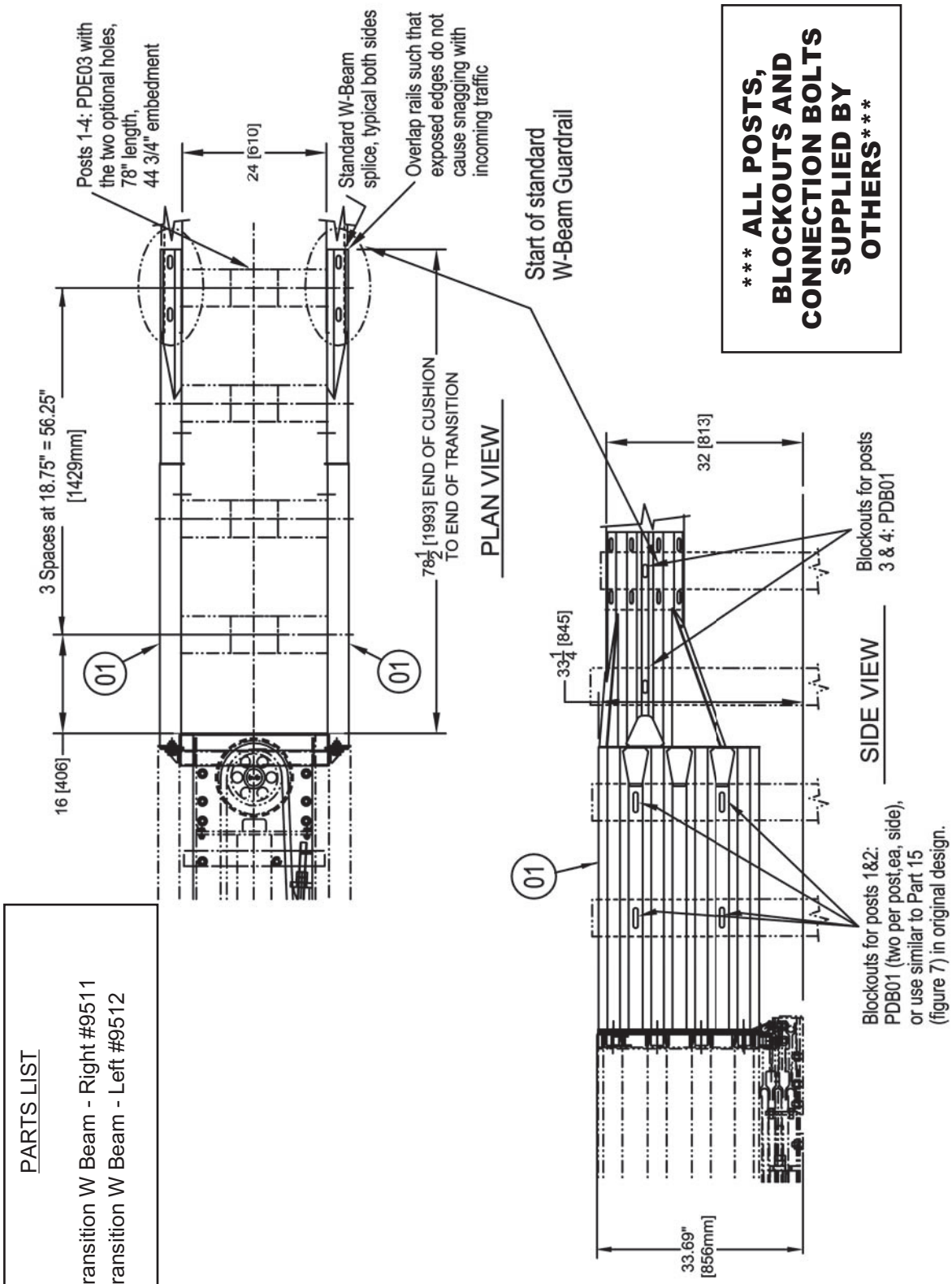

***** ALL POSTS, BLOCKOUTS AND CONNECTION BOLTS SUPPLIED BY OTHERS*****

PARTS LIST

01 - Transition W Beam - Right #9511
01 - Transition W Beam - Left #9512

APPENDIX Q(2) & R(2) - TRANSITION, W-BEAM 28" & 32" HIGH

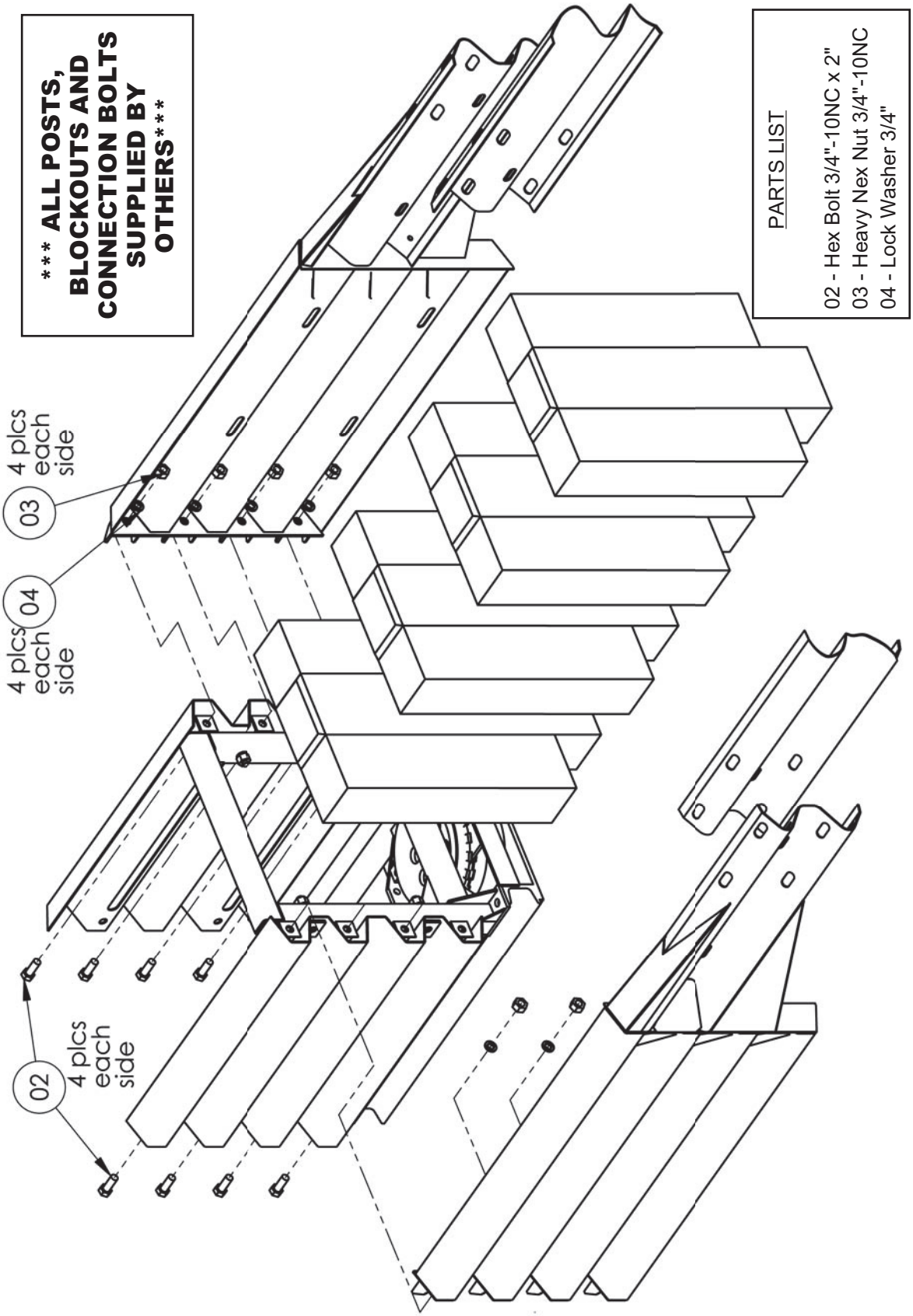

APPENDIX S - TRANSITION, WIDE BLOCK SPANNER

PARTS LIST

01 - Spanner Transition to Wide Block Right (shown)
& Left #9537 (opposite)

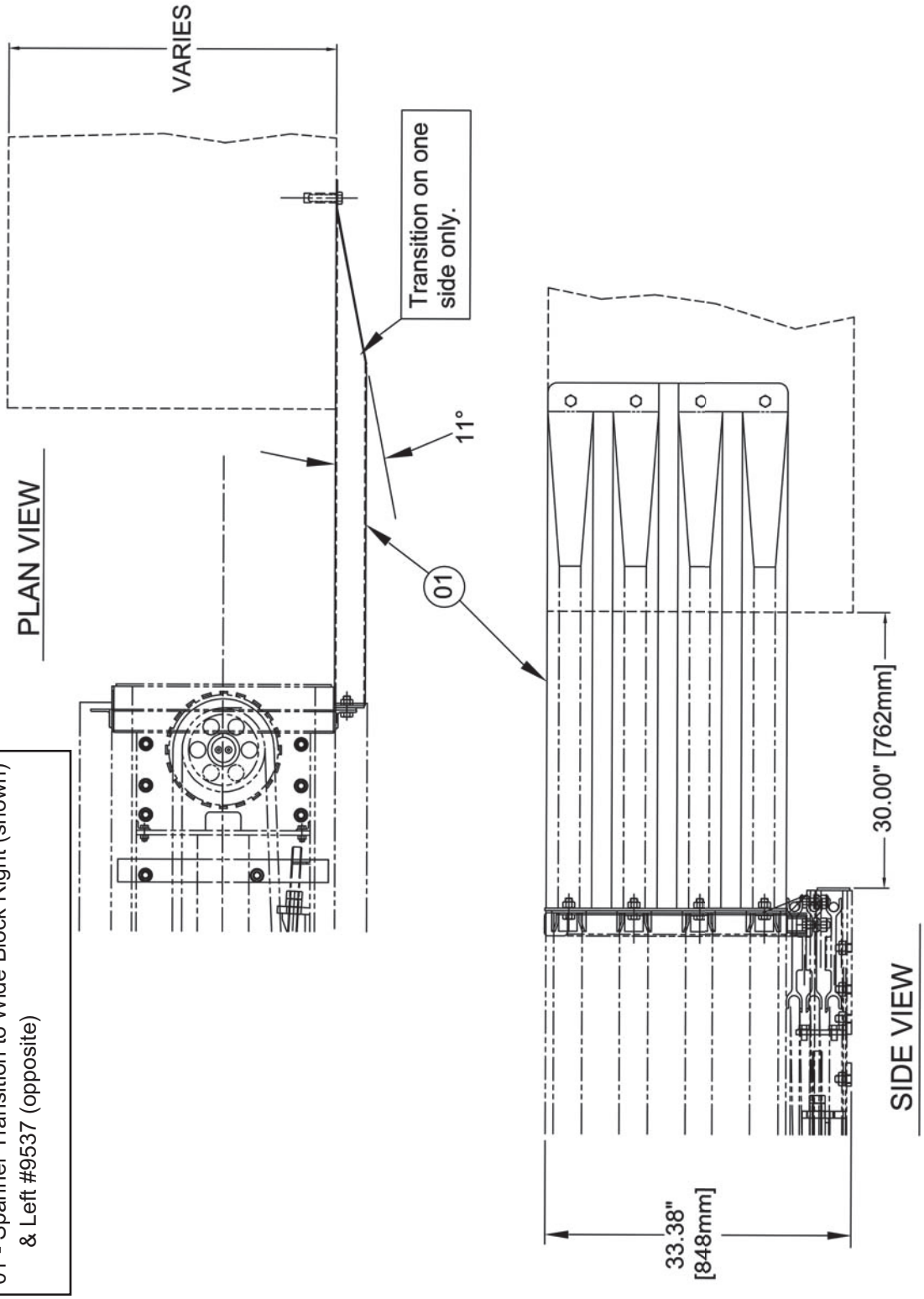

APPENDIX S(2) - TRANSITION, WIDE BLOCK SPANNER

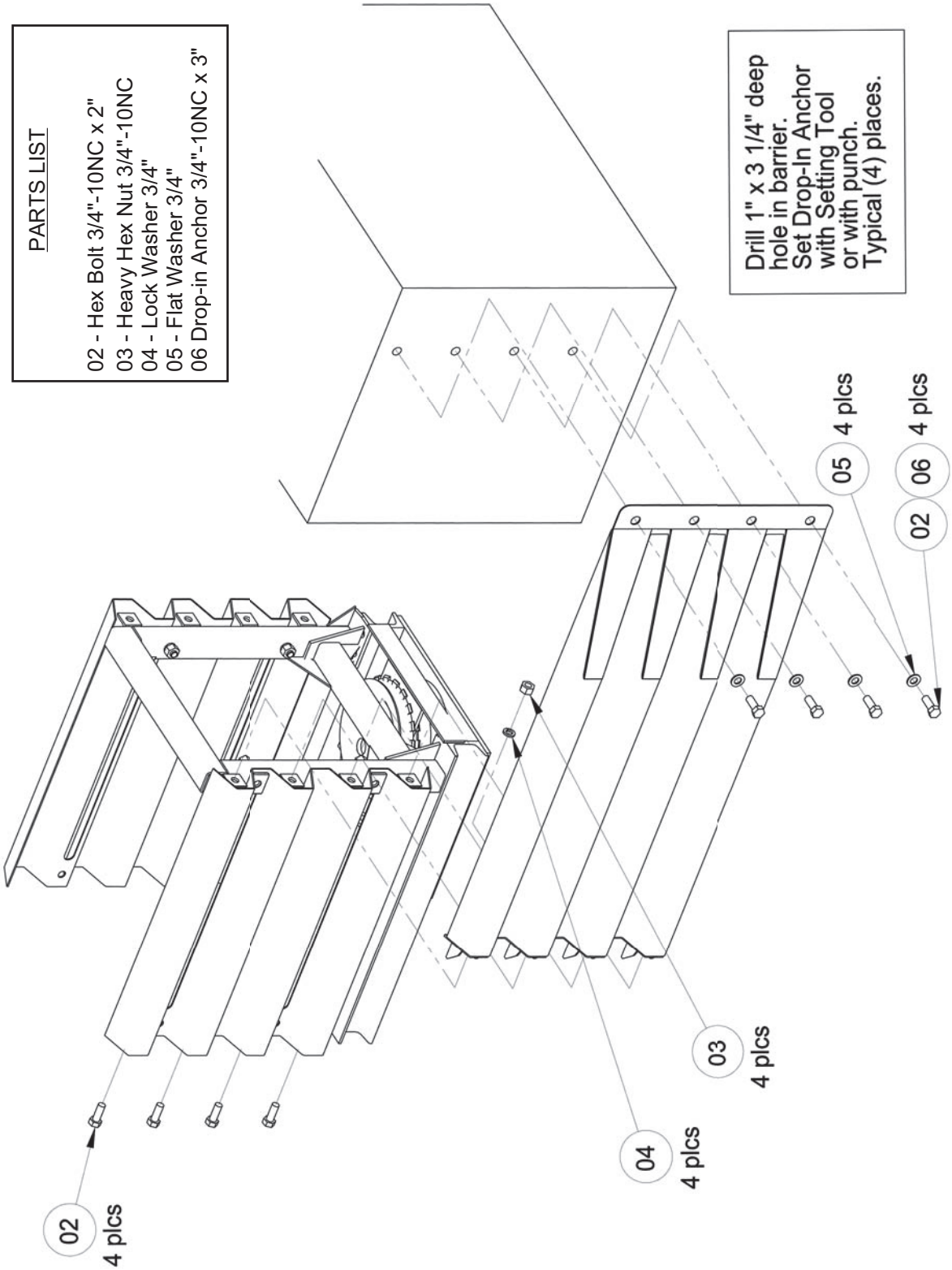

QuadGuard® ELITE
Crash Cushion

❶ Diaphragm
❷ HDPE Cylinder
❸ Flex-Belt Nose
❹ Quad-beam™ Panel
❺ Monorail Base
❻ Backup

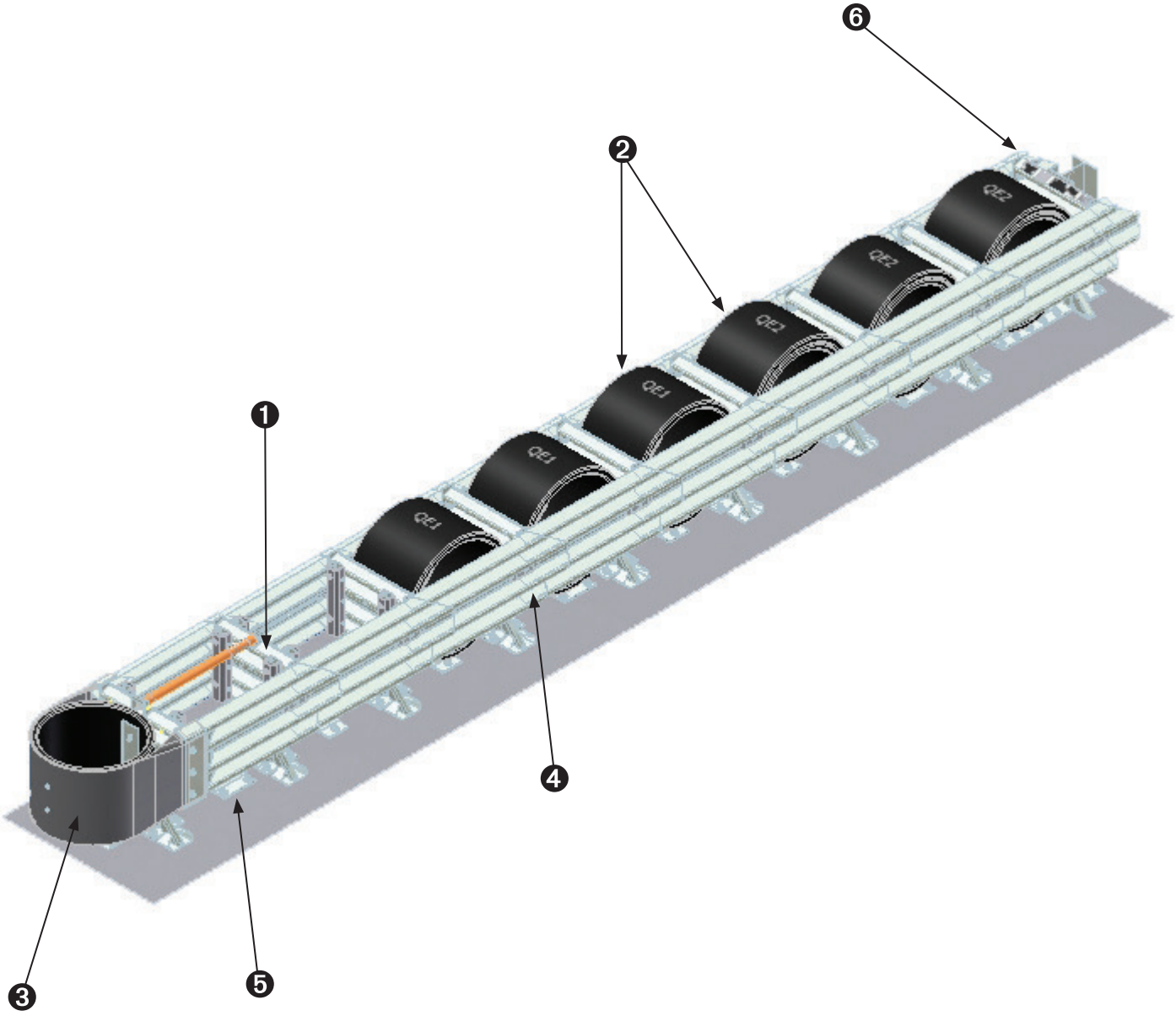

Heather Grove
Laboratory Supervisor
City of Manteca WQCF
1001 W. Center St.
Manteca, CA 95337
Direct: (209)456-8473
Fax: (209)923-8990
hgrove@ci.manteca.ca.us

Lian, Joe@DOT

From: Ha, Daniel K@DOT
Sent: Wednesday, October 28, 2015 12:39 PM
To: Lian, Joe@DOT
Subject: FW: Recycled Water Workshop Mandatory for Contractors letter

fyi

From: Grove, Heather [mailto:hgrove@ci.manteca.ca.us]
Sent: Wednesday, October 28, 2015 12:28 PM
To: Ha, Daniel K@DOT <daniel.ha@dot.ca.gov>
Cc: Firmalo, Justine <jfirmalo@ci.manteca.ca.us>; Chan, Nicholas P C@DOT <nicholas.chan@dot.ca.gov>; Pinne, Joy E@DOT <joy.pinne@dot.ca.gov>; mhoughton@ci.manteca.ca.us
Subject: RE: Recycled Water Workshop Mandatory for Contractors letter

Daniel,
I sent your request to our Public Works Director Mark Houghton and his response is as follows:

"I would say ok but they would need to pay the construction water rate of 2.72 $/HCF, and comply with our regulatory process. If they use the amounts estimated that would cost them about $50K, plus the cost of about 1500 truck trips (35 miles round trip). There have to be a lot of farm wells between here and there, but if they are mandated to use reclaimed I would welcome their use."

If you are still interested in using City of Manteca's recycled water for this project, the contractor will have to obtain certification for each water truck driver. Please call Justine Firmalo at 209-456-8470 to schedule a workshop. We normally run the workshops on every other Wednesday at 8:00am depending on demand. If you have any other questions, let me know.

Thank you,

Heather Grove
Laboratory Supervisor
City of Manteca WQCF
1001 W. Center St.
Manteca, CA 95337
(209)456-8473
(209)923-8990 fax
hgrove@ci.manteca.ca.us

From: Ha, Daniel K@DOT [mailto:daniel.ha@dot.ca.gov]
Sent: Tuesday, October 27, 2015 9:31 AM
To: Grove, Heather
Cc: Firmalo, Justine; Chan, Nicholas P C@DOT; Pinne, Joy E@DOT
Subject: RE: Recycled Water Workshop Mandatory for Contractors letter

Hi Heather,

I am Caltrans Project Engineer working on a rehabilitation project in San Joaquin County near City of Vernalis from Route 580 to the Stanislaus County line near Greenwood Road, and obtained below information yesterday from Justine about using City of Manteca non-portable water to support my project. Attachments are the project title sheet showing the construction location and spread sheet showing various construction activities requiring water usage. The construction of the project would begin in July 2016 and end in August 2018 and estimated about 14.5 million gallons of water is needed during the construction.

I have one more question about City of Manteca's non-portable water usage. Can we utilize City of Manteca's non-portable water to support the above road construction project which is outside of City of Manteca boundary if our contractor obtain a certification?

I would appreciate if you could provide us with a response by this Friday.

Daniel Ha
Caltrans
Design P
(559)243-3897

From: Firmalo, Justine [mailto:jfirmalo@ci.manteca.ca.us]
Sent: Monday, October 26, 2015 3:32 PM
To: Ha, Daniel K@DOT <daniel.ha@dot.ca.gov>
Subject: Recycled Water Workshop Mandatory for Contractors letter

Hello Daniel,

Attached is the information I mentioned with the Recycled Water Workshop dates and contact information.

Thank you.

_____

Justine Firmalo
Adminstrative Assistant II

Water Quality Control Facility (WQCF)
jfirmalo@ci.manteca.ca.us | O: 209-456-8470 | F: 209-923-8990
2450 W. Yosemite Avenue, Manteca, CA 95337