Dist	COUNTY	ROUTE	POST MILES TOTAL PROJECT	SHEET No.	TOTAL SHEETS
11	Imp	8	R73.1/R73.9	1	18

INDEX OF PLANS

SHEET NO.	DESCRIPTION
1	TITLE AND LOCATION MAP
2	TYPICAL CROSS SECTIONS
3-6	LAYOUT
7	CONSTRUCTION DETAILS
8	CONSTRUCTION AREA SIGNS
9	PAVEMENT DELINEATION QUANTITIES
10	SUMMARY OF QUANTITIES
11-14	TRAFFIC CONTROL SYSTEM
15-18	REVISED STANDARD PLANS

THE STANDARD PLANS LIST APPLICABLE TO THIS CONTRACT IS INCLUDED IN THE NOTICE TO BIDDERS AND SPECIAL PROVISIONS BOOK.

STATE OF CALIFORNIA

DEPARTMENT OF TRANSPORTATION

PROJECT PLANS FOR CONSTRUCTION ON

STATE HIGHWAY

IN IMPERIAL COUNTY AT GORDON'S WELL FROM 0.4 MILE WEST TO 0.4 MILE EAST OF GORDON'S WELL OVERCROSSING

TO BE SUPPLEMENTED BY STANDARD PLANS DATED 2010

LOCATION MAP

IMPERIAL COUNTY

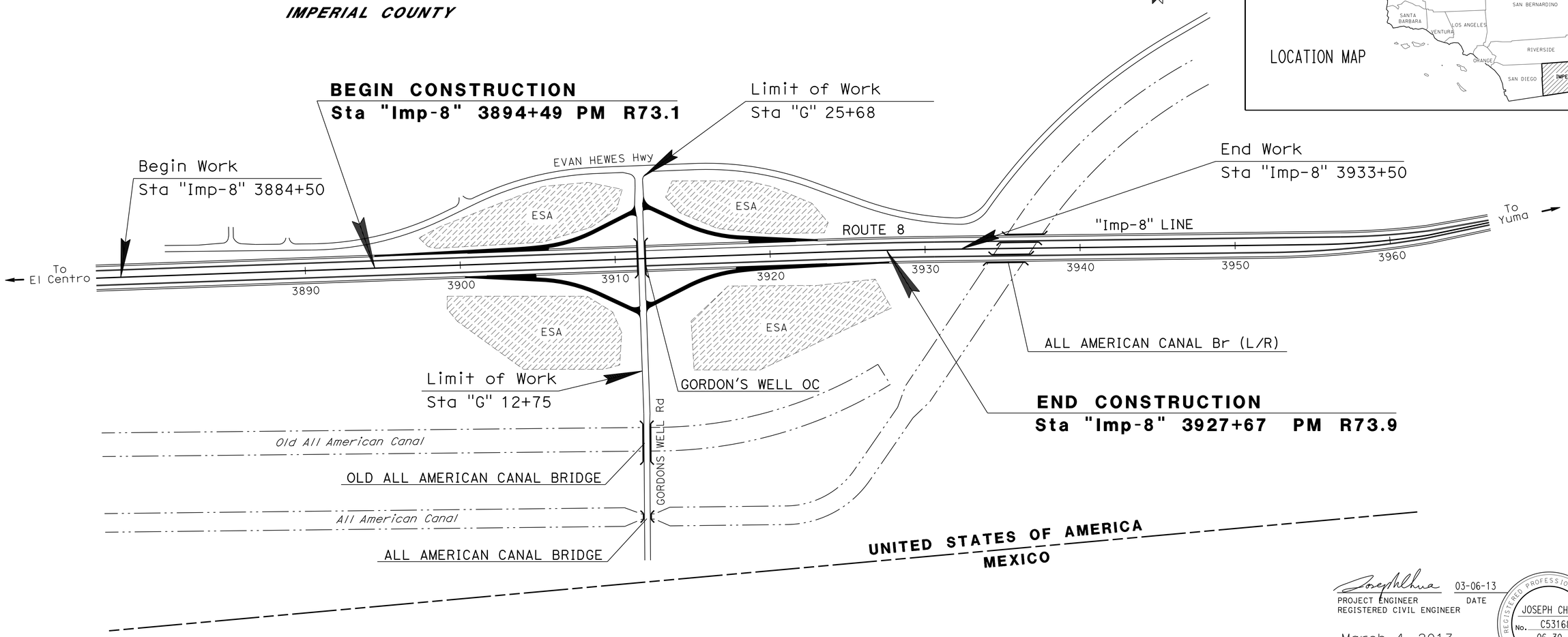

PROJECT MANAGER: CHRIS THOMAS

DESIGN ENGINEER: JOSEPH CHUA

THE CONTRACTOR SHALL POSSESS THE CLASS (OR CLASSES) OF LICENSE AS SPECIFIED IN THE "NOTICE TO BIDDERS."

NO SCALE

03-06-13

PROJECT ENGINEER REGISTERED CIVIL ENGINEER — DATE

March 4, 2013

PLANS APPROVAL DATE

REGISTERED PROFESSIONAL ENGINEER — JOSEPH CHUA — No. C53168 — Exp. 06-30-13 — CIVIL — STATE OF CALIFORNIA

THE STATE OF CALIFORNIA OR ITS OFFICERS OR AGENTS SHALL NOT BE RESPONSIBLE FOR THE ACCURACY OR COMPLETENESS OF SCANNED COPIES OF THIS PLAN SHEET.

CONTRACT No.	11-410004
PROJECT ID	1112000058

LAST REVISION 03-06-13

DATE PLOTTED => 07-MAR-2013
TIME PLOTTED => 10:56

Dist	COUNTY	ROUTE	POST MILES TOTAL PROJECT	SHEET No.	TOTAL SHEETS
11	Imp	8	R73.1/R73.9	2	18

REGISTERED CIVIL ENGINEER 03-06-13 DATE

03-04-13
PLANS APPROVAL DATE

REGISTERED PROFESSIONAL ENGINEER JOSEPH CHUA No. 53168 Exp. 06-30-13 CIVIL STATE OF CALIFORNIA

THE STATE OF CALIFORNIA OR ITS OFFICERS OR AGENTS SHALL NOT BE RESPONSIBLE FOR THE ACCURACY OR COMPLETENESS OF SCANNED COPIES OF THIS PLAN SHEET.

NOTES:
1. DIMENSIONS OF THE PAVEMENT STRUCTURES (STRUCTURAL SECTIONS) ARE SUBJECT TO TOLERANCES SPECIFIED IN THE STANDARD SPECIFICATIONS.
2. FOG SEAL COAT SHALL BE APPLIED TO ALL HMA SURFACES EXCEPT TRAVELED WAYS.
3. EXACT LOCATIONS AND TYPES OF HMA DIKE ARE SHOWN ON THE LAYOUTS AND SUMMARY OF QUANTITIES SHEET.

* SEE LAYOUT FOR GORE AREA

DESIGN DESIGNATION

(EB Rte 8 OFF-RAMP TO GORDON'S WELL Rd)

2009 ADT = 93 T = MEDIUM
2035 ADT = 140 V = 50 MPH
DHV = 15

(WB Rte 8 OFF-RAMP TO GORDON'S WELL Rd)

2009 ADT = 64 T = MEDIUM
2035 ADT = 110 V = 50 MPH
DHV = 20

(EB Rte 8 ON-RAMP FROM GORDON'S WELL Rd)

2009 ADT = 63 T = MEDIUM
2035 ADT = 100 V = 50 MPH
DHV = 14

(WB Rte 8 ON-RAMP FROM GORDON'S WELL Rd)

2009 ADT = 85 T = MEDIUM
2035 ADT = 130 V = 50 MPH
DHV = 14

PAVEMENT CLIMATE REGION

DESERT

Exist
[A] 0.30' ASPHALT CONCRETE
0.60' AGGREGATE BASE (CLASS 2)

Exist
[B] 0.30' ASPHALT CONCRETE
0.60' - 0.36' AGGREGATE BASE (CLASS 2)

[C] 0.30' HOT MIX ASPHALT (TYPE C)

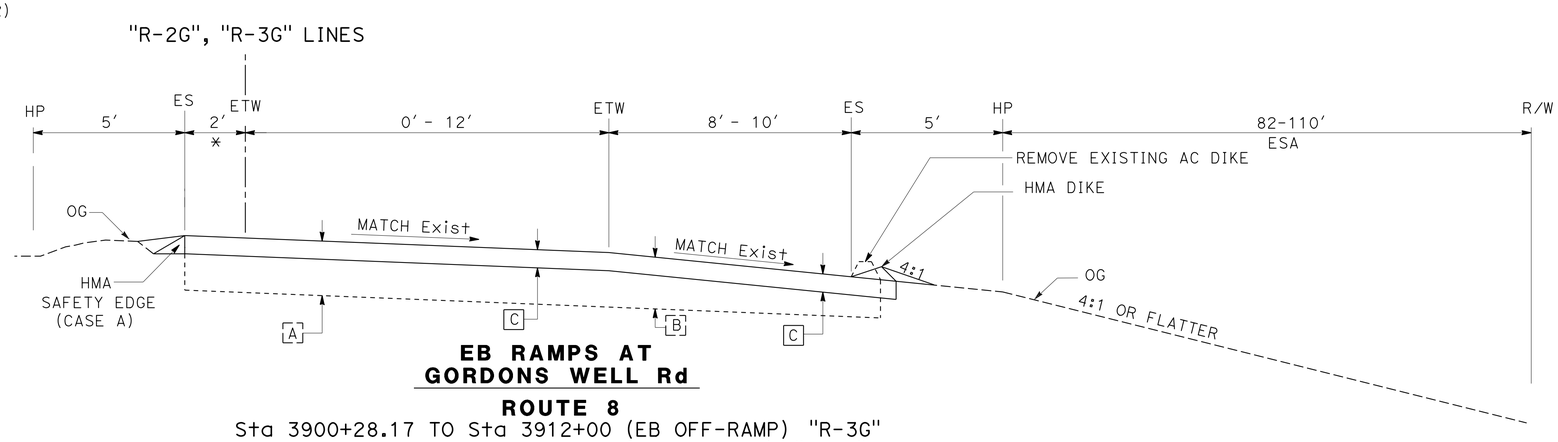

EB RAMPS AT GORDONS WELL Rd

ROUTE 8

Sta 3900+28.17 TO Sta 3912+00 (EB OFF-RAMP) "R-3G"
Sta 3911+48 TO Sta 3927+66.99 (EB ON-RAMP) "R-2G"

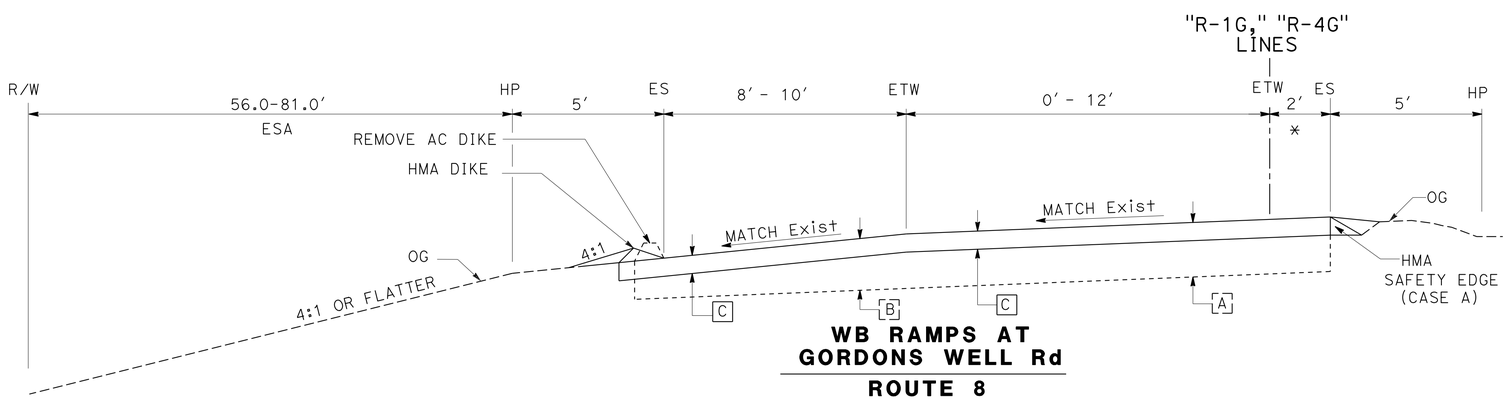

WB RAMPS AT GORDONS WELL Rd

ROUTE 8

Sta 3894+49.38 TO Sta 3911+86 (WB ON-RAMP) "R-4G"
Sta 3911+42 TO Sta 3923+10.60 (WB OFF-RAMP) "R-1G"

TYPICAL CROSS SECTIONS

NO SCALE

X-1

REVISED BY | DATE REVISED
JOSEPH CHUA | TONY NGUYEN
CALCULATED-DESIGNED BY | CHECKED BY
FUNCTIONAL SUPERVISOR: CHRIS THOMAS

STATE OF CALIFORNIA - DEPARTMENT OF TRANSPORTATION
Caltrans
DESIGN

LAST REVISION 03-06-13 | DATE PLOTTED => 07-MAR-2013 | TIME PLOTTED => 10:56

Dist	COUNTY	ROUTE	POST MILES TOTAL PROJECT	SHEET No.	TOTAL SHEETS
11	Imp	8	R73.1/R73.9	3	18

REGISTERED CIVIL ENGINEER 03-06-13 DATE

03-04-13
PLANS APPROVAL DATE

REGISTERED PROFESSIONAL ENGINEER JOSEPH CHUA No. 53168 Exp. 06-30-13 CIVIL STATE OF CALIFORNIA

THE STATE OF CALIFORNIA OR ITS OFFICERS OR AGENTS SHALL NOT BE RESPONSIBLE FOR THE ACCURACY OR COMPLETENESS OF SCANNED COPIES OF THIS PLAN SHEET.

NOTE:

1. FOR ACCURATE RIGHT OF WAY DATA, CONTACT RIGHT OF WAY ENGINEERING AT THE DISTRICT OFFICE.

LEGEND:

ROADWAY EXCAVATION (0.30' Max)
0.30' HOT MIX ASPHALT (TYPE C)

(X) MBGR

—— - e —— —— -(oh)- OVER HEAD ELECTRICAL
OWNER -- IID

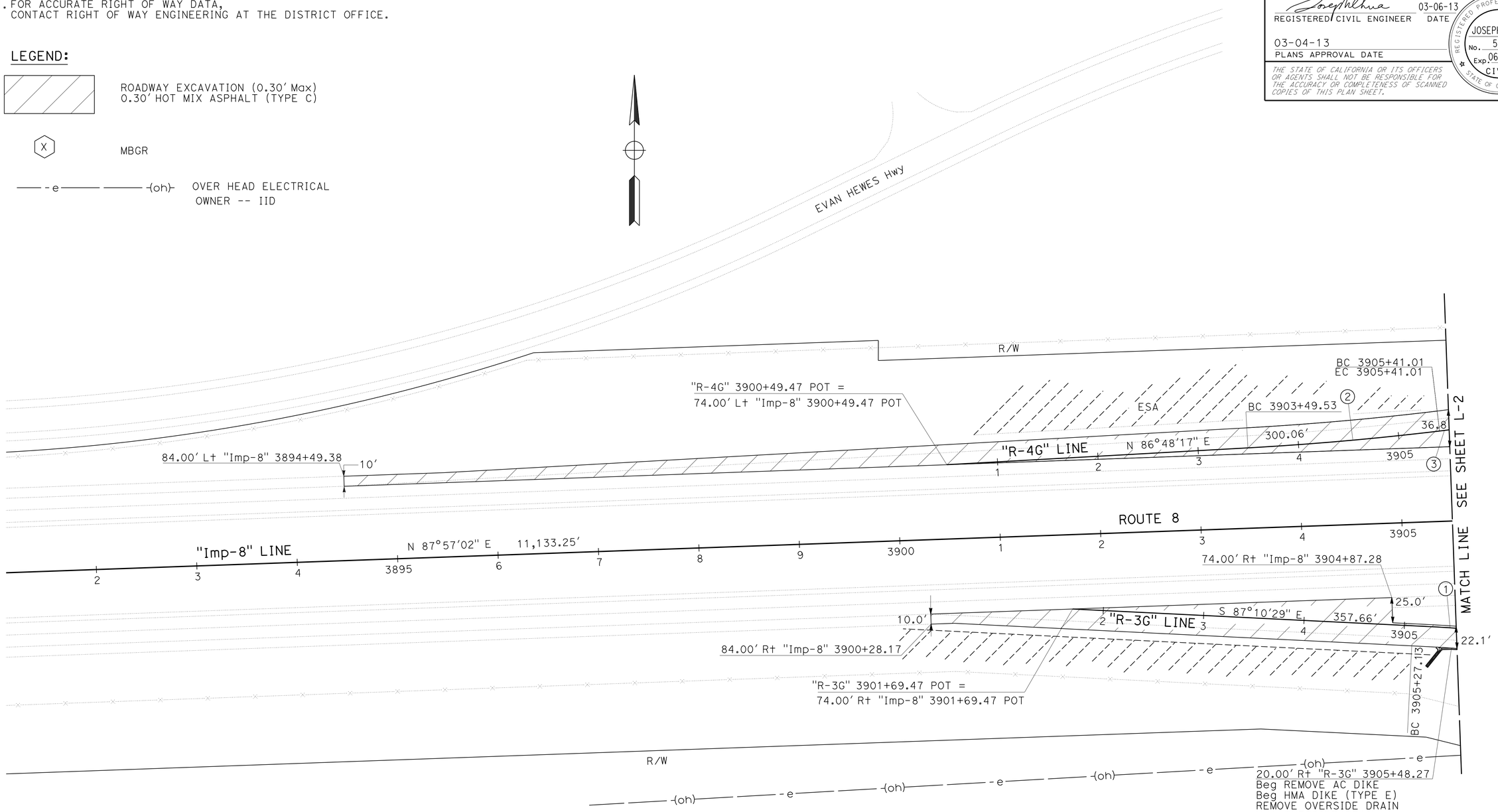

CURVE DATA

No.	R	Δ	T	L
1	3,000'	03°39'25"	95.77'	191.48'
2	1,000'	22°10'31"	195.97'	387.03'
3	1,000'	20°08'50"	177.65'	351.64

LAYOUT

SCALE: 1" = 50'

L-1

REVISED BY	DATE REVISED
JOSEPH CHUA	TONY NGUYEN
CALCULATED-DESIGNED BY	CHECKED BY
FUNCTIONAL SUPERVISOR	CHRIS THOMAS

STATE OF CALIFORNIA - DEPARTMENT OF TRANSPORTATION
Caltrans
DESIGN

LAST REVISION 03-06-13 | DATE PLOTTED => 07-MAR-2013 | TIME PLOTTED => 10:56

Dist	COUNTY	ROUTE	POST MILES TOTAL PROJECT	SHEET No.	TOTAL SHEETS
11	Imp	8	R73.1/R73.9	4	18

REGISTERED CIVIL ENGINEER 03-06-13 DATE

03-04-13
PLANS APPROVAL DATE

REGISTERED PROFESSIONAL ENGINEER JOSEPH CHUA No. 53168 Exp. 06-30-13 CIVIL STATE OF CALIFORNIA

THE STATE OF CALIFORNIA OR ITS OFFICERS OR AGENTS SHALL NOT BE RESPONSIBLE FOR THE ACCURACY OR COMPLETENESS OF SCANNED COPIES OF THIS PLAN SHEET.

NOTE:

1. FOR ACCURATE RIGHT OF WAY DATA, CONTACT RIGHT OF WAY ENGINEERING AT THE DISTRICT OFFICE.

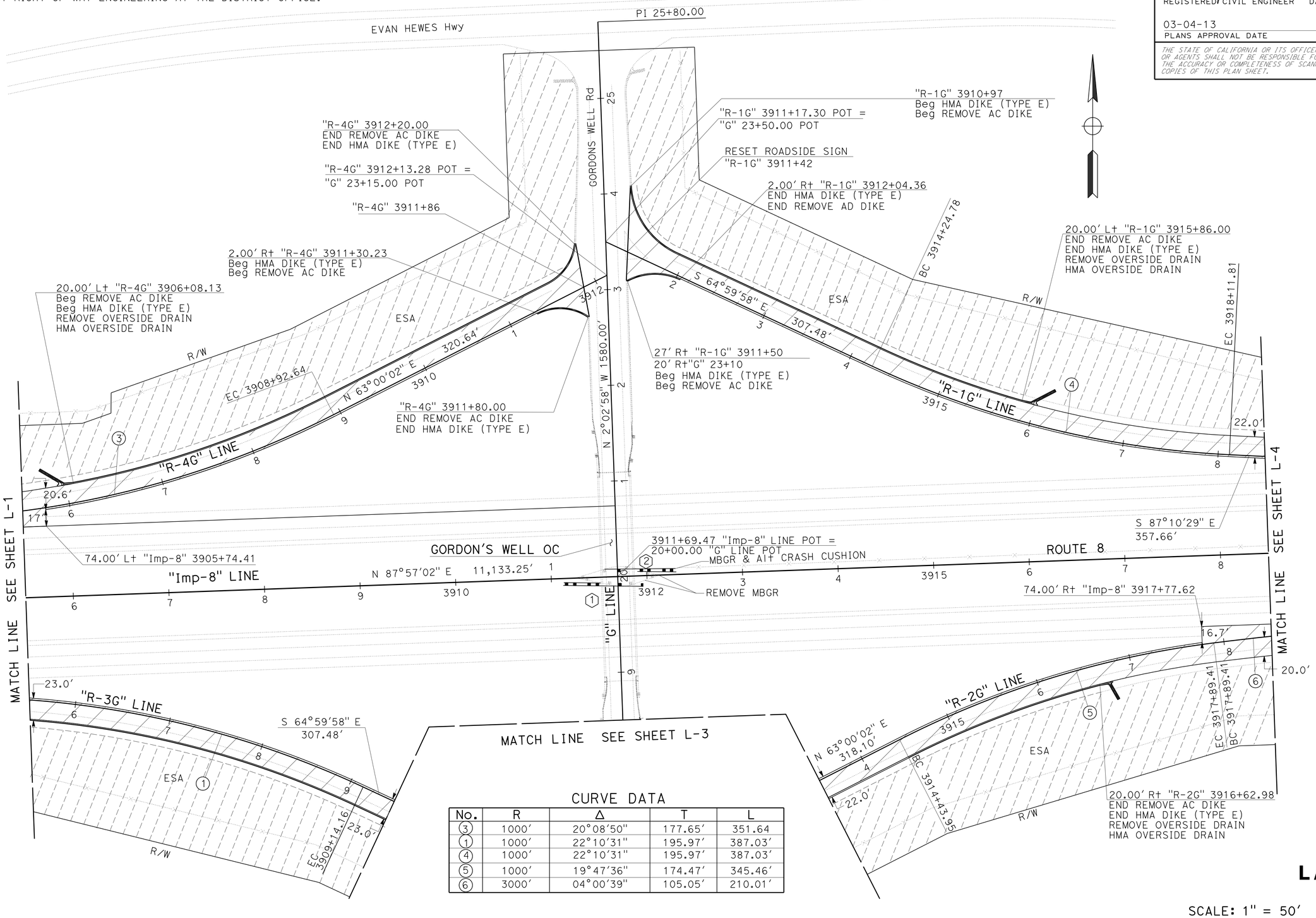

CURVE DATA

No.	R	Δ	T	L
3	1000'	20°08'50"	177.65'	351.64
1	1000'	22°10'31"	195.97'	387.03'
4	1000'	22°10'31"	195.97'	387.03'
5	1000'	19°47'36"	174.47'	345.46'
6	3000'	04°00'39"	105.05'	210.01'

LAYOUT L-2

SCALE: 1" = 50'

REVISED BY	DATE REVISED	JOSEPH CHUA	TONY NGUYEN	CALCULATED-DESIGNED BY	CHECKED BY	FUNCTIONAL SUPERVISOR	CHRIS THOMAS

STATE OF CALIFORNIA - DEPARTMENT OF TRANSPORTATION
Caltrans® DESIGN

LAST REVISION 03-06-13 | DATE PLOTTED => 07-MAR-2013 | TIME PLOTTED => 10:56

Dist	COUNTY	ROUTE	POST MILES TOTAL PROJECT	SHEET No.	TOTAL SHEETS
11	Imp	8	R73.1/R73.9	5	18

REGISTERED CIVIL ENGINEER 03-06-13 DATE

03-04-13
PLANS APPROVAL DATE

REGISTERED PROFESSIONAL ENGINEER JOSEPH CHUA No. 53168 Exp. 06-30-13 CIVIL STATE OF CALIFORNIA

THE STATE OF CALIFORNIA OR ITS OFFICERS OR AGENTS SHALL NOT BE RESPONSIBLE FOR THE ACCURACY OR COMPLETENESS OF SCANNED COPIES OF THIS PLAN SHEET.

NOTE:

1. FOR ACCURATE RIGHT OF WAY DATA, CONTACT RIGHT OF WAY ENGINEERING AT THE DISTRICT OFFICE.

LEGEND:

——-e——— ——(oh)— OVER HEAD ELECTRICAL
OWNER -- IID

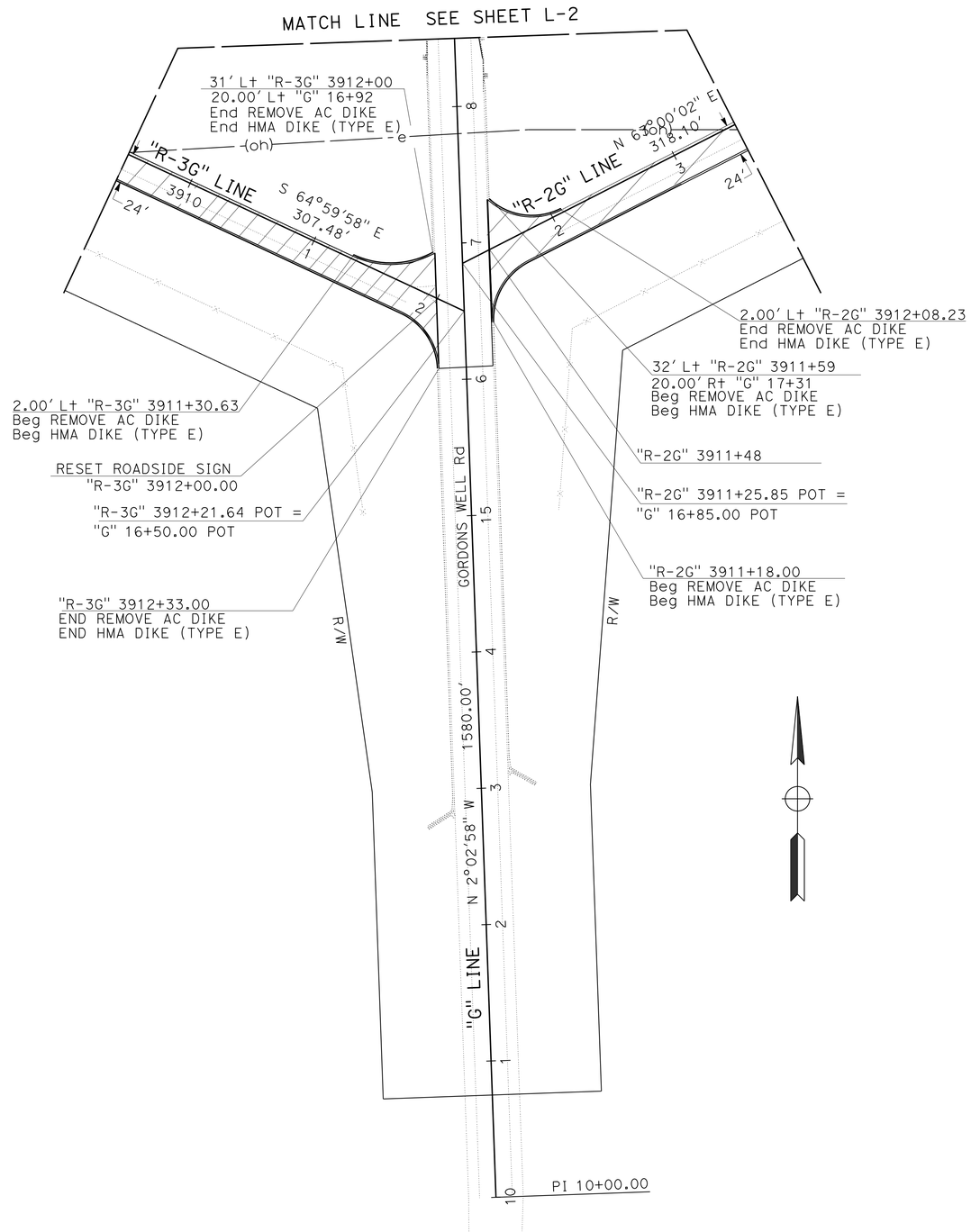

LAYOUT L-3

SCALE: 1" = 50'

STATE OF CALIFORNIA - DEPARTMENT OF TRANSPORTATION
Caltrans® DESIGN

FUNCTIONAL SUPERVISOR: CHRIS THOMAS
CALCULATED-DESIGNED BY: JOSEPH CHUA
CHECKED BY: TONY NGUYEN
REVISED BY
DATE REVISED

LAST REVISION 03-06-13 | DATE PLOTTED => 07-MAR-2013 | TIME PLOTTED => 10:56

Dist	COUNTY	ROUTE	POST MILES TOTAL PROJECT	SHEET No.	TOTAL SHEETS
11	Imp	8	R73.1/R73.9	6	18

REGISTERED CIVIL ENGINEER 03-06-13 DATE

03-04-13
PLANS APPROVAL DATE

REGISTERED PROFESSIONAL ENGINEER JOSEPH CHUA No. 53168 Exp. 06-30-13 CIVIL STATE OF CALIFORNIA

THE STATE OF CALIFORNIA OR ITS OFFICERS OR AGENTS SHALL NOT BE RESPONSIBLE FOR THE ACCURACY OR COMPLETENESS OF SCANNED COPIES OF THIS PLAN SHEET.

NOTE:

1. FOR ACCURATE RIGHT OF WAY DATA, CONTACT RIGHT OF WAY ENGINEERING AT THE DISTRICT OFFICE.

LEGEND:

—— - e —— —— -(oh)— OVER HEAD ELECTRICAL OWNER -- IID

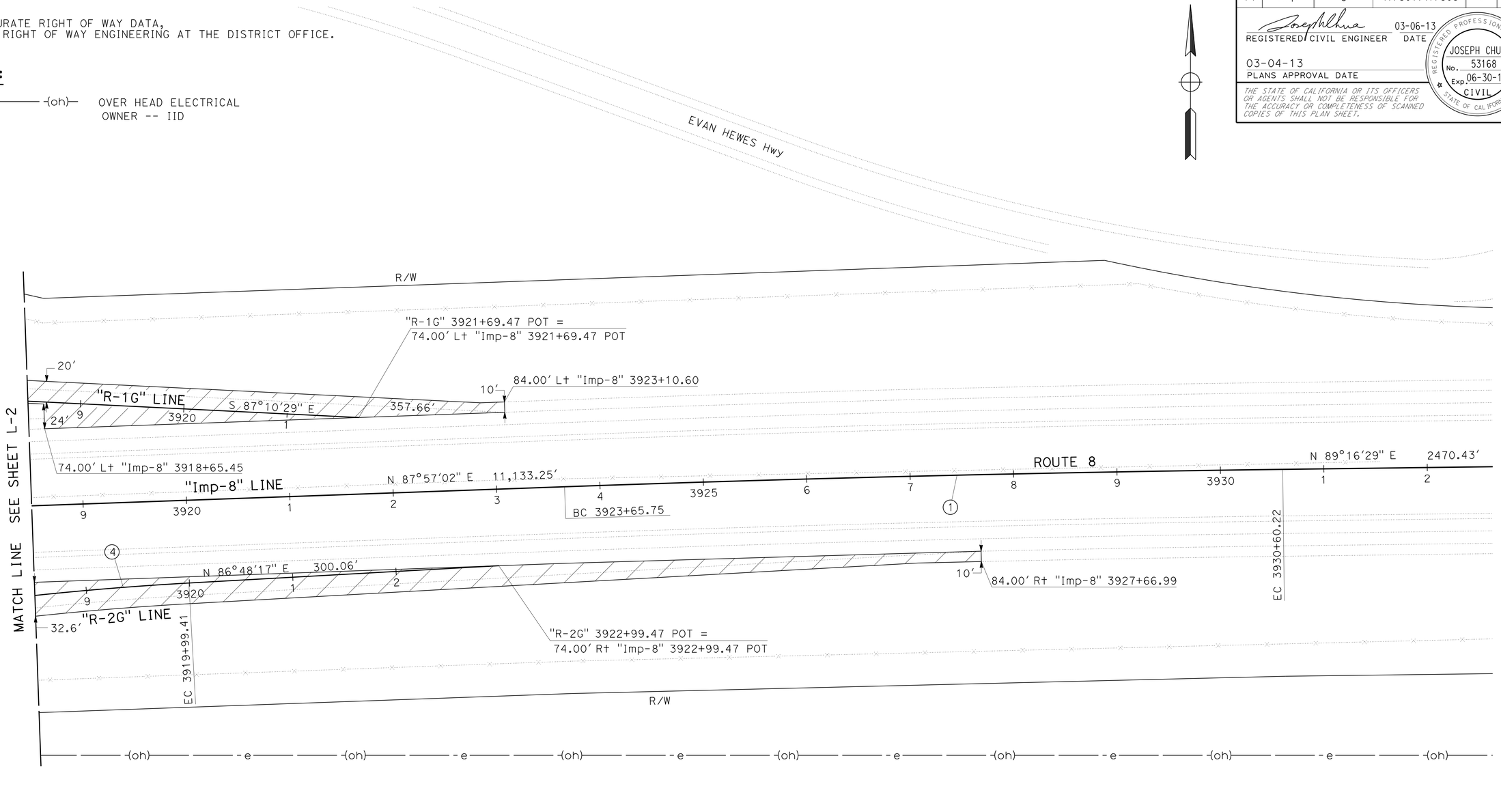

CURVE DATA

No.	R	Δ	T	L
4	3000′	04°00′39"	105.05′	210.01′
1	3000′	03?39′25"	95.77′	191.48′

LAYOUT
L-4

SCALE: 1" = 50′

REVISED BY	DATE REVISED
JOSEPH CHUA	TONY NGUYEN
CALCULATED-DESIGNED BY	CHECKED BY
FUNCTIONAL SUPERVISOR	CHRIS THOMAS

STATE OF CALIFORNIA - DEPARTMENT OF TRANSPORTATION
Caltrans
DESIGN

LAST REVISION 03-06-13 | DATE PLOTTED => 07-MAR-2013 TIME PLOTTED => 10:56

Dist	COUNTY	ROUTE	POST MILES TOTAL PROJECT	SHEET No.	TOTAL SHEETS
11	Imp	8	R73.1/R73.9	7	18

REGISTERED CIVIL ENGINEER 03-06-13 DATE

03-04-13
PLANS APPROVAL DATE

REGISTERED PROFESSIONAL ENGINEER
JOSEPH CHUA
No. 53168
Exp. 06-30-13
CIVIL
STATE OF CALIFORNIA

THE STATE OF CALIFORNIA OR ITS OFFICERS OR AGENTS SHALL NOT BE RESPONSIBLE FOR THE ACCURACY OR COMPLETENESS OF SCANNED COPIES OF THIS PLAN SHEET.

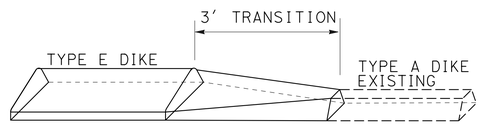

HMA DIKE TRANSITION DETAIL

NO SCALE

CONSTRUCTION DETAILS
C-1

STATE OF CALIFORNIA - DEPARTMENT OF TRANSPORTATION
Caltrans® DESIGN

FUNCTIONAL SUPERVISOR: CHRIS THOMAS
CALCULATED-DESIGNED BY: JOSEPH CHUA
CHECKED BY: TONY NGUYEN
REVISED BY
DATE REVISED

LAST REVISION 03-06-13 | DATE PLOTTED => 07-MAR-2013 | TIME PLOTTED => 10:56

Dist	COUNTY	ROUTE	POST MILES TOTAL PROJECT	SHEET No.	TOTAL SHEETS
11	Imp	8	R73.1/R73.9	8	18

REGISTERED CIVIL ENGINEER 03-06-13 DATE

03-04-13
PLANS APPROVAL DATE

REGISTERED PROFESSIONAL ENGINEER JOSEPH CHUA No. 53168 Exp. 06-30-13 CIVIL STATE OF CALIFORNIA

THE STATE OF CALIFORNIA OR ITS OFFICERS OR AGENTS SHALL NOT BE RESPONSIBLE FOR THE ACCURACY OR COMPLETENESS OF SCANNED COPIES OF THIS PLAN SHEET.

NOTES:

1. EXACT LOCATION OF CONSTRUCTION AREA SIGNS WILL BE DETERMINED BY THE ENGINEER.
2. FEDERAL MANUAL ON UNIFORM TRAFFIC CONTROL DEVICES (MUTCD) SIGN CODES ARE SHOWN UNLESS DESIGNATED BY (CA), INDICATING CALIFORNIA MUTCD.
3. EXISTING UTILITIES ARE NOT SHOWN ON THESE PLAN SHEETS. THE CONTRACTOR SHALL VERIFY LOCATIONS OF EXISTING UTILITIES AND ADJUST THE FIELD LOCATION OF SIGN POSTS IN CONSULTATION WITH THE ENGINEER.

LEGEND:

[X] = CONSTRUCTION AREA SIGNS

→ = DIRECTION OF TRAFFIC

CONSTRUCTION AREA SIGNS

SIGN No.	TYPE	PANEL SIZE (In)x(In)	No. OF POST AND SIZE (In)x(In)	No. OF SIGNS
1	C40 (CA)	108 X 42	2-4 X 6 (s)	2
2	C14 (CA)	48 X 24	1-4 X 4 (s)	5
3	C23 (CA)	48 X 48	1-4 X 6 (s)	5
4	SC6-4 (CA)	48 X 60	PORTABLE	4
			TOTAL	16

(s) DENOTES STATIONARY MOUNTED SIGN

TYPICAL PLACEMENT OF TRAFFIC PLASTIC DRUM

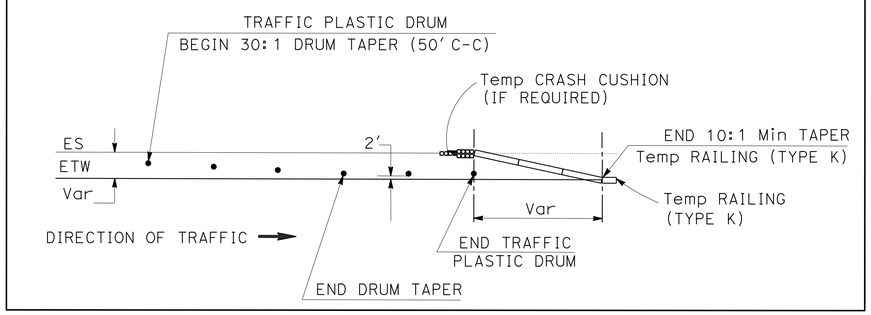

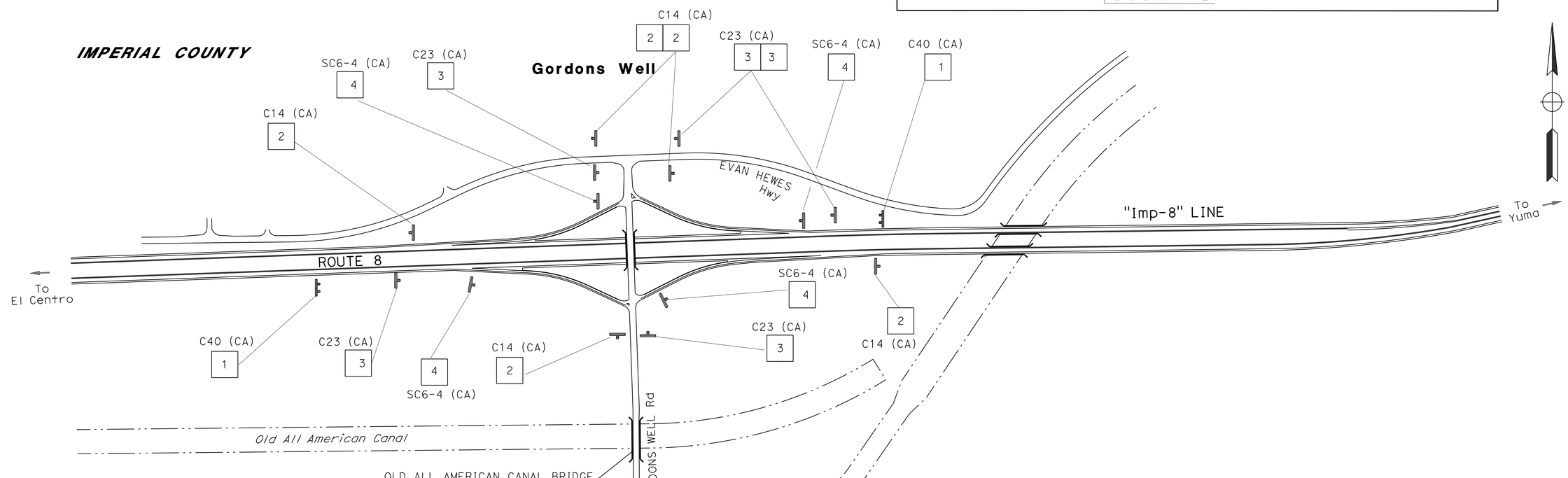

CONSTRUCTION AREA SIGNS

NO SCALE

CS-1

STATE OF CALIFORNIA - DEPARTMENT OF TRANSPORTATION
Caltrans DESIGN

FUNCTIONAL SUPERVISOR: CHRIS THOMAS
CALCULATED-DESIGNED BY: JOSEPH CHUA
CHECKED BY: TONY NGUYEN
REVISED BY / DATE REVISED

LAST REVISION 03-06-13 | DATE PLOTTED => 07-MAR-2013 | TIME PLOTTED => 10:56

Dist	COUNTY	ROUTE	POST MILES TOTAL PROJECT	SHEET No.	TOTAL SHEETS
11	Imp	8	R73.1/R73.9	9	18

REGISTERED CIVIL ENGINEER 03-06-13 DATE

03-04-13
PLANS APPROVAL DATE

REGISTERED PROFESSIONAL ENGINEER JOSEPH CHUA No. 53168 Exp. 06-30-13 CIVIL STATE OF CALIFORNIA

THE STATE OF CALIFORNIA OR ITS OFFICERS OR AGENTS SHALL NOT BE RESPONSIBLE FOR THE ACCURACY OR COMPLETENESS OF SCANNED COPIES OF THIS PLAN SHEET.

PAVEMENT DELINEATION QUANTITIES

PAVEMENT MARKER SUMMARY

ROUTE	LOCATION	DETAIL	RETROREFLECTIVE (EA) TYPE G CLEAR	RETROREFLECTIVE (EA) TYPE H YELLOW	PAINT TRAFFIC STRIPE (2-COAT) (LF)	REMARKS
8	WB OFF-RAMP TO GORDONS WELL ROAD	25A		51	1,200	REPLACE IN KIND
		27B			1,250	
		36	25		570	
		38	4		70	
		38A			35	
8	WB ON-RAMP FROM GORDONS WELL ROAD	25A		27	620	
		27B			1,770	
		36A	10		460	
		8			150	
8	EB OFF-RAMP TO GORDONS WELL ROAD	25A		31	720	
		27B			1,200	
		36	25		570	
		38	4		45	
		38A			20	
8	EB ON-RAMP FROM GORDONS WELL ROAD	25A		28	650	
		27B			1,641	
		36A	10		460	
		8			150	
	SUB TOTAL		78	137		
	TOTAL		215		11,581	

REMOVE PAVEMENT MARKERS (N)

ROUTE	LOCATION	TYPE G, H (EA)
8	WB OFF RAMP	80
8	WB ON RAMP	37
8	EB OFF RAMP	60
8	EB ON RAMP	38
	TOTAL	215

(N) - NOT A SEPARATE PAY ITEM, FOR INFORMATION ONLY.

RESET ROADSIDE SIGN

ROUTE	LOCATION	(EA)
8	WB OFF RAMP	1
8	EB OFF RAMP	1
	TOTAL	2

THERMOPLASTIC PAVEMENT MARKING

Rte	LOCATION	TYPE I-24' SQFT	TYPE V SQFT	STOP SQFT	AHEAD SQFT	YIELD SQFT	12" LIMIT LINE SQFT	REMARKS
8	WB OFF-RAMP TO GORDONS WELL ROAD	31	66	22	31	24	12	REPLACE IN KIND
8	WB ON-RAMP FROM GORDONS WELL ROAD	31						
8	EB OFF-RAMP TO GORDONS WELL ROAD	31	66	22	31	24	12	
8	EB ON-RAMP FROM GORDONS WELL ROAD	31					24	
	SUB TOTAL	124	132	44	62	48	48	
	TOTAL		458					

PAVEMENT DELINEATION QUANTITIES
PDQ-1

REVISED BY | DATE REVISED
JOSEPH CHUA | TONY NGUYEN
CALCULATED-DESIGNED BY | CHECKED BY
FUNCTIONAL SUPERVISOR: CHRIS THOMAS

STATE OF CALIFORNIA - DEPARTMENT OF TRANSPORTATION
Caltrans
DESIGN

LAST REVISION 03-06-13 | DATE PLOTTED => 07-MAR-2013 | TIME PLOTTED => 10:56

Dist	COUNTY	ROUTE	POST MILES TOTAL PROJECT	SHEET No.	TOTAL SHEETS
11	Imp	8	R73.1/R73.9	10	18

REGISTERED CIVIL ENGINEER 03-06-13 DATE

03-04-13
PLANS APPROVAL DATE

REGISTERED PROFESSIONAL ENGINEER JOSEPH CHUA No. 53168 Exp. 06-30-13 CIVIL STATE OF CALIFORNIA

THE STATE OF CALIFORNIA OR ITS OFFICERS OR AGENTS SHALL NOT BE RESPONSIBLE FOR THE ACCURACY OR COMPLETENESS OF SCANNED COPIES OF THIS PLAN SHEET.

HMA DIKE

SHEET	LINE	BEGIN STATION	END STATION	REMOVE AC DIKE (CY) (N)	PLACE HMA DIKE (LF) (TYPE E)	MINOR HMA (Ton) DIKE (TYPE E)	REMARK
L-1	"R-3G" (20' R+)	3905+48.27	3912+33.00	8.9	685	17.5	EXIST TYPE A DIKE
L-1	"R-3G" (2' R+)	3911+30.63	3912+00.00	1.0	70	1.8	EXIST TYPE A DIKE
L-2	"R-4G" (20' L+)	3906+08.13	3912+20.00	8.0	612	15.6	EXIST TYPE A DIKE
	"R-1G" (20' L+)	3910+97.00	3915+86	6.4	489	12.5	EXIST TYPE A DIKE
	"R-1G" (2' R+)	3911+50	3912+04.36	.7	54	1.4	EXIST TYPE A DIKE
	"R-4G" (2' R+)	3911+30.23	3911+80	.65	50	1.3	EXIST TYPE A DIKE
L-3	"R-2G" (20' R+)	3911+18.00	3916+62.98	7.1	545	14.0	EXIST TYPE A DIKE
	"R-3G" (2' L+)	3911+30.63	3912+00	1.0	70	1.8	EXIST TYPE A DIKE
	"R-2G" (2' L+)	3911+59	3912+08.23	.64	49	1.3	EXIST TYPE A DIKE
			SUBTOTAL	34.39	2624	67.2	
			TOTAL	34.39	2624	67.2 **	

** SEE CONSTRUCTION QUANTITIES TABLE FOR ADDITIONAL QUANTITIES

METAL BEAM GUARD RAILING

⬡ MBGR No.	SHEET No.	LAYOUT TYPE	LINE	BEGIN STATION	END STATION	REMOVE MBGR (LF)	TREATED WOOD WASTE (LB)	MBGR (LF)	DOUBLE MBGR (LF)	RAIL TENSIONING ASSEMBLY (EA)	END ANCHOR ASSEMBLY (TYPE SFT) (EA)	GUARD RAILING DELINEATOR (TYPE G) (EA)	ALTERNATIVE CRASH CUSHION (EA)
1	L-2	14A	"Imp-8"	3910+89	3911+76	80	565	31	25	1	1	3	1
2	L-2	14A	"Imp-8"	3911+64	3912+51	80	565	31	25	1	1	3	1
					TOTAL	160	1130	62	50	2	2	6	2

CONSTRUCTION QUANTITIES

SHEET	LINE	BEGIN STATION	END STATION	TOTAL AREA [N] (SQFT) SHOULDER & GORE	TOTAL AREA [N] (SQFT) TRAVELED WAY	ROADWAY EXCAVATION (CY)	HMA (TYPE C) (Ton)	MINOR HMA (Ton)	TACK COAT (Ton)	ASPHALTIC EMULSION (FOG SEAL COAT) (Ton)	PLACE HMA (MISC. AREA) (SQYD) *
L-1 L-2 L-3	"Imp-8","R-3G"	3900+28.17	3912+00	15,693	14,062	331	662	0.95	1.1	0.44	5.8
	"Imp-8","R-4G"	3894+49.38	3911+86	21,829	20,839	474	948	0.95	1.2	0.43	5.8
L-3 L-4	"R-1G","Imp-8"	3911+42	3923+10.60	15,334	14,023	326	652	0.95	0.9	0.39	5.8
	"R-2G","Imp-8"	3911+48	3927+67	20,549	19,428	444	888	0.95	1.1	0.60	5.8
L-1 L-2 L-3	REMOVE AC DIKE					34.39					
	SUBTOTAL					1609.39	3150	3.8	4.3	1.86	
	HMA DIKE							67.2			
	TOTAL					1609.39	3150	71	4.3	1.86	23.2

(N): NOT A SEPARATE PAY ITEM. FOR INFORMATION ONLY
* OVERSIDE DRAIN

SUMMARY OF QUANTITIES
Q-1

STATE OF CALIFORNIA - DEPARTMENT OF TRANSPORTATION
Caltrans DESIGN
FUNCTIONAL SUPERVISOR: CHRIS THOMAS
CALCULATED-DESIGNED BY: JOSEPH CHUA
CHECKED BY: TONY NGUYEN
REVISED BY
DATE REVISED

LAST REVISION 03-06-13
DATE PLOTTED => 07-MAR-2013
TIME PLOTTED => 10:56

Dist	COUNTY	ROUTE	POST MILES TOTAL PROJECT	SHEET No.	TOTAL SHEETS
11	Imp	8	R73.1/R73.9	11	18

REGISTERED CIVIL ENGINEER 12-7-12 DATE

03-04-13
PLANS APPROVAL DATE

REGISTERED PROFESSIONAL ENGINEER Gurinderpal Bhullar No. C48815 Exp. 9-30-14 CIVIL STATE OF CALIFORNIA

THE STATE OF CALIFORNIA OR ITS OFFICERS OR AGENTS SHALL NOT BE RESPONSIBLE FOR THE ACCURACY OR COMPLETENESS OF SCANNED COPIES OF THIS PLAN SHEET.

NOTES:

Unless otherwise specified in the special provisions, all temporary warning signs shall have black legend on orange background.

California code are designated by (CA). Otherwise, Federal (MUTCD) codes are shown.

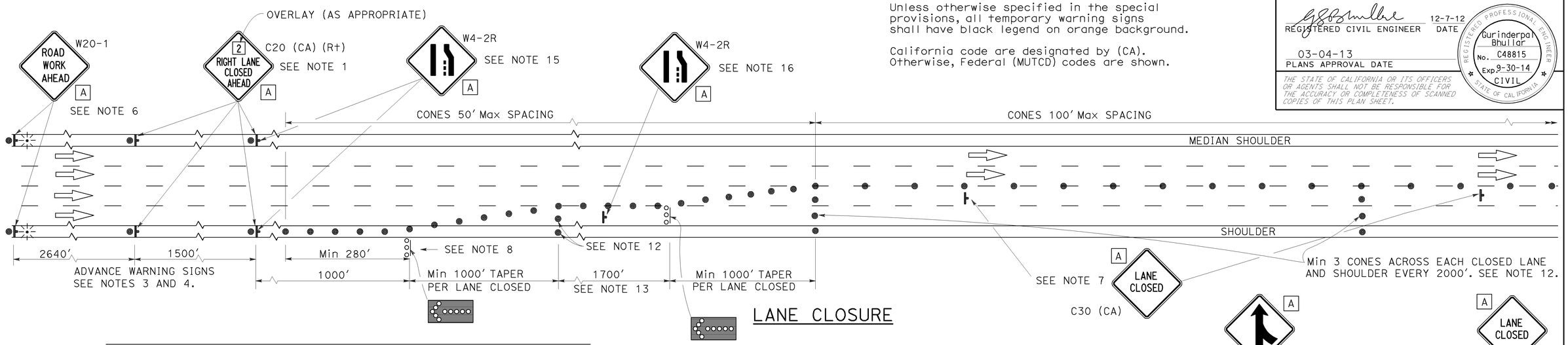

LANE CLOSURE

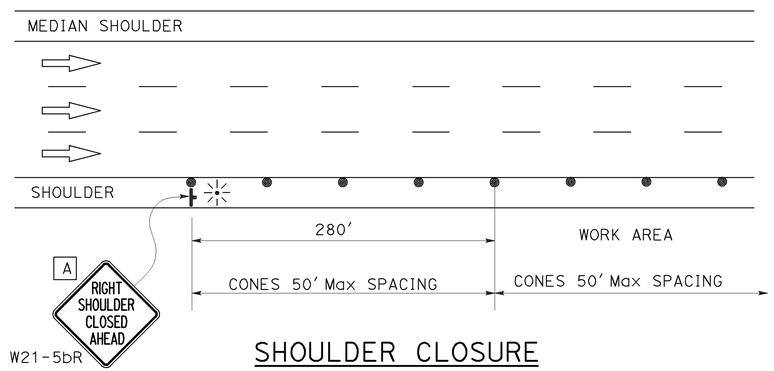

SHOULDER CLOSURE

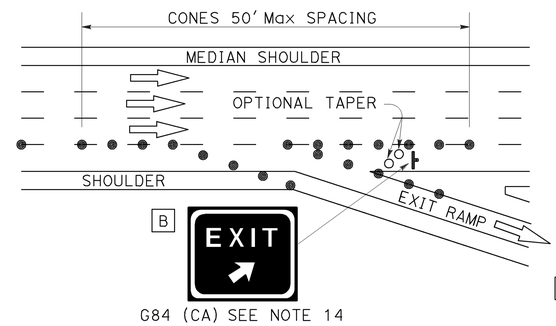

LANE CLOSURE AT EXIT RAMP

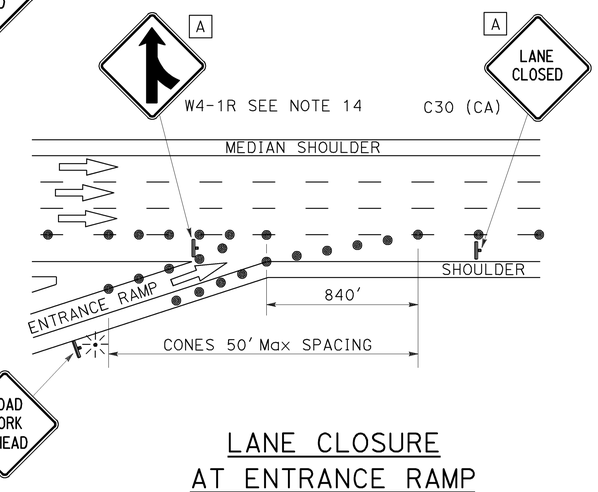

LANE CLOSURE AT ENTRANCE RAMP

NOTES:

1. Median lane closures shall conform to the details for outside lane closures except that C20 (CA) (Lt) signs shall be used.
2. At least one person shall be assigned to provide full time maintenance of traffic control devices for lane closures.
3. Duplicate sign installations are not required:
   a) On opposite shoulder if at least one-half of the available lanes remain open to traffic.
   b) In the median if the width of the median shoulder is less than 8' and the outside lanes are to be closed.
4. Each advance warning sign on each side of the roadway shall be equipped with at least two flags for daytime closure. Each flag shall be at least 16" x 16" in size and shall be orange or fluorescent red-orange in color. Flashing beacons shall be placed at the locations indicated for lane closure during hours of darkness.
5. A C14 (CA) "END ROAD WORK" sign, as appropriate, shall be placed at the end of the lane closure unless the end of work area is obvious or ends within a larger project's limits.
6. If the W20-1 sign would follow within 2000' of a stationary W20-1 or C11 (CA) "ROAD WORK NEXT _____ MILES", use a C20 (CA) sign for the first advance warning sign.
7. Place a C30 (CA) sign every 2000' throughout length of lane closure.
8. One flashing arrow sign for each lane closed. The first flashing arrow sign shall be Type I. All others may be either Type I or Type II.
9. A minimum 1500' of sight distance shall be provided where possible for vehicles approaching the first flashing arrow sign. Lane closures shall not begin at top of crest vertical curve or on a horizontal curve.
10. All cones used for lane closures during the hours of darkness shall be fitted with retroreflective bands (or sleeves) as specified in the specifications.
11. Portable delineators, placed at one-half the spacing indicated for traffic cones may be used instead of cones for daytime closures only.
12. Unless otherwise specified in the special provisions, a minimum of 3 cones shall be placed transversely across each closed lane and shoulder at each location where a taper across a traffic lane ends and every 2000' as shown on the "Lane Closure" detail. Two Type II barricades may be used instead of the 3 cones. The transverse alignment of the cones or barricades on the closed shoulder may be shifted from the transverse alignment to provide access to the work.
13. Unless otherwise specified in the special provisions, the 1700' tangent shown along lane lines shall be used between the 1000' tapers required for each closed traffic lane.
14. Unless otherwise specified in the special provisions, the G84 (CA) and W4-1 signs shall be used as shown.
15. When specified in the special provisions, a W4-2 "LANE ENDS" symbol sign is to be used in place of the C20 (CA) "RIGHT LANE CLOSED AHEAD" sign.
16. The W4-2 "LANE ENDS" symbol sign shown at this location is to be used where the W4-2 sign is used as advance warning as described in Note 15.

SIGN PANEL SIZE (Min)

A	48" x 48"
B	54" x 48"

LEGEND

- TRAFFIC CONE
- TRAFFIC CONE (OPTIONAL TAPER)
- TEMPORARY SIGN
- FLASHING ARROW SIGN (FAS)
- FAS SUPPORT OR TRAILER
- PORTABLE FLASHING BEACON

STATE OF CALIFORNIA
DEPARTMENT OF TRANSPORTATION

TRAFFIC CONTROL SYSTEM FOR LANE CLOSURE ON FREEWAYS AND EXPRESSWAYS

NO SCALE

TCS-1

REVISED BY | DATE REVISED | CALCULATED-DESIGNED BY | CHECKED BY | FUNCTIONAL SUPERVISOR

STATE OF CALIFORNIA - DEPARTMENT OF TRANSPORTATION

Caltrans

LAST REVISION 03-04-13 | DATE PLOTTED => 10-DEC-2012 | TIME PLOTTED => 09:45

Dist	COUNTY	ROUTE	POST MILES TOTAL PROJECT	SHEET No.	TOTAL SHEETS
11	Imp	8	R73.1/R73.9	12	18

REGISTERED CIVIL ENGINEER 12-7-12 DATE

03-04-13
PLANS APPROVAL DATE

REGISTERED PROFESSIONAL ENGINEER Gurinderpal Bhullar No. C48815 Exp. 9-30-14 CIVIL STATE OF CALIFORNIA

THE STATE OF CALIFORNIA OR ITS OFFICERS OR AGENTS SHALL NOT BE RESPONSIBLE FOR THE ACCURACY OR COMPLETENESS OF SCANNED COPIES OF THIS PLAN SHEET.

NOTES:

Unless otherwise specified in the special provisions, all temporary warning signs shall have black legend on orange background.

California code are designated by (CA). Otherwise, Federal (MUTCD) codes are shown.

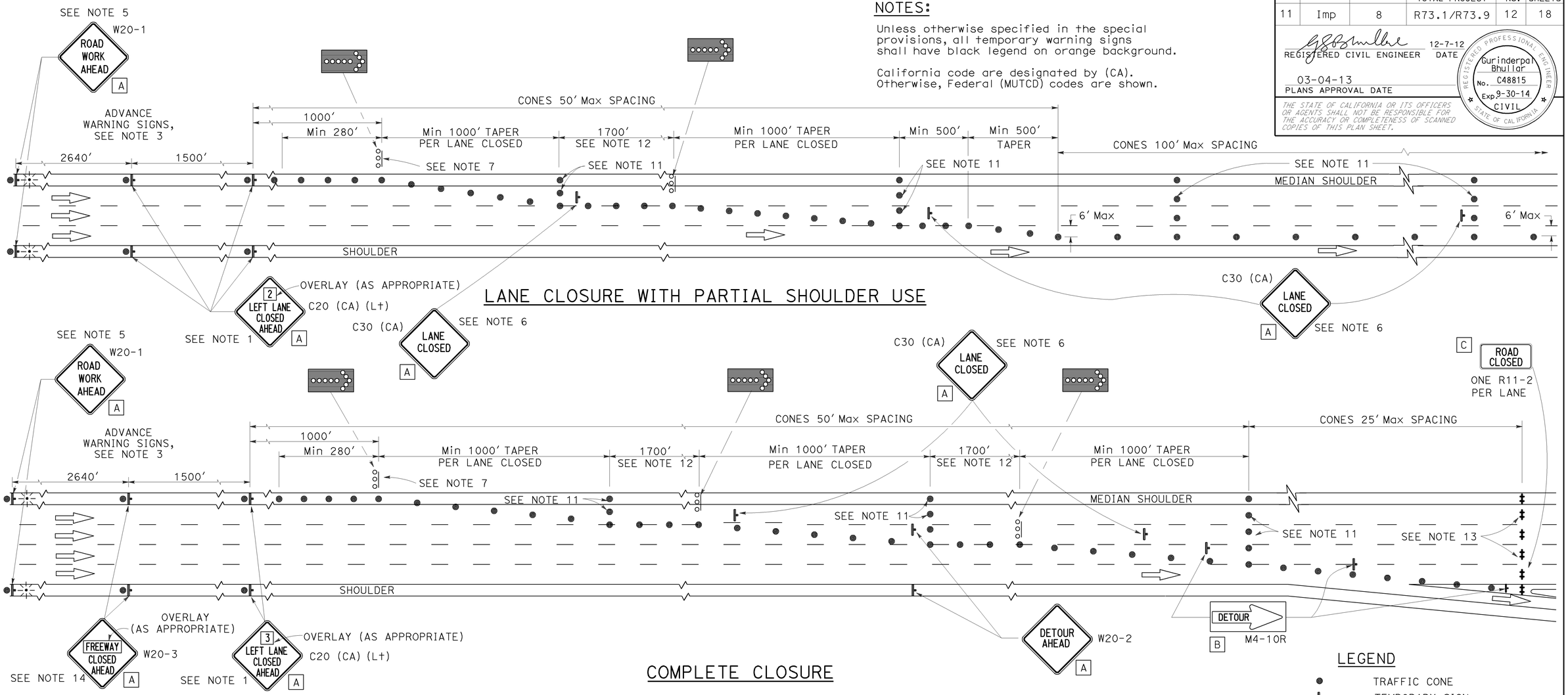

LANE CLOSURE WITH PARTIAL SHOULDER USE

COMPLETE CLOSURE

LEGEND

- TRAFFIC CONE
- TEMPORARY SIGN
- BARRICADE
- FLASHING ARROW SIGN (FAS)
- FAS SUPPORT OR TRAILER
- PORTABLE FLASHING BEACON

NOTES:

1. Lane closures on the right side using partial median shoulder as a traffic lane shall conform to the details for inside lane closure except that C20 (CA) (Rt) signs shall be used.
2. At least one person shall be assigned to provide full time maintenance of traffic control devices for lane closures.
3. Each advance warning sign on each side of the roadway shall be equipped with at least two flags for daytime closure. Each flag shall be at least 16" X 16" in size and shall be orange or fluorescent red-orange in color. Flashing beacons shall be placed at the locations indicated for lane closure during hours of darkness.
4. A C14 (CA) "END ROAD WORK" sign, as appropriate, shall be placed at the end of the lane closure unless the end of work area is obvious or ends within a larger project's limits.
5. If the W20-1 sign would follow within 2000′ of a stationary W20-1 or C11 (CA) "ROAD WORK NEXT ___ MILES", use a C20 (CA) sign for the first advance warning sign.
6. Place a C30 (CA) sign every 2000′ throughout length of lane closure.
7. One flashing arrow sign for each lane closed. The first flashing arrow sign shall be Type I. All others may be either Type I or Type II.
8. A minimum 1500′ of sight distance shall be provided where possible for vehicles approaching the first flashing arrow sign. Lane closures shall not begin at the top of crest vertical curve or on a horizontal curve.
9. All cones used for lane closures during the hours of darkness shall be fitted with retroreflective bands (or sleeves) as specified in the specifications.
10. Portable delineators, placed at one-half the spacing indicated for traffic cones, may be used instead of cones for daytime closures only.
11. Unless otherwise specified in the special provisions, a minimum of 3 cones shall be placed transversely across each closed lane and shoulder at each location where a taper across a traffic lane ends and every 2000′ as shown on the "Lane Closure With Partial Shoulder Use" detail. Two Type II barricades may be used instead of the 3 cones. The transverse alignment of the cones or barricades on the closed shoulder may be shifted from the transverse alignment to provide access to the work.
12. Unless otherwise specified in the special provisions, the 1700′ tangent shown along lane lines shall be used between the 1000′ tapers required for each closed traffic lane.
13. A minimum of Two Type II barricades shall be placed across each closed lane and shoulder at the location shown and every 2000′ within the complete closure area. Within the complete closure area, the transverse alignment of the barricades on the closed shoulder may be shifted from the transverse alignment to provide access to the work.
14. When specified in the special provisions, a W20-2 "DETOUR AHEAD" sign is to be used in place of the W20-3 "FREEWAY CLOSED AHEAD" sign.

SIGN PANEL SIZE (Min)

A	48" × 48"
B	48" × 18"
C	48" × 30"

STATE OF CALIFORNIA
DEPARTMENT OF TRANSPORTATION

TRAFFIC CONTROL SYSTEM FOR LANE AND COMPLETE CLOSURES ON FREEWAYS AND EXPRESSWAYS

NO SCALE

TCS-2

STATE OF CALIFORNIA - DEPARTMENT OF TRANSPORTATION

Caltrans

REVISED BY | DATE REVISED | CALCULATED-DESIGNED BY | CHECKED BY | FUNCTIONAL SUPERVISOR

LAST REVISION 03-04-13 | DATE PLOTTED => 10-DEC-2012 | TIME PLOTTED => 09:45

Dist	COUNTY	ROUTE	POST MILES TOTAL PROJECT	SHEET No.	TOTAL SHEETS
11	Imp	8	R73.1/R73.9	13	18

REGISTERED CIVIL ENGINEER 12-7-12 DATE

03-04-13
PLANS APPROVAL DATE

REGISTERED PROFESSIONAL ENGINEER Gurinderpal Bhullar No. C48815 Exp 9-30-14 CIVIL STATE OF CALIFORNIA

THE STATE OF CALIFORNIA OR ITS OFFICERS OR AGENTS SHALL NOT BE RESPONSIBLE FOR THE ACCURACY OR COMPLETENESS OF SCANNED COPIES OF THIS PLAN SHEET.

NOTES:

Unless otherwise specified in the special provisions, all temporary warning signs shall have black legend on orange background.

California code are designated by (CA). Otherwise, Federal (MUTCD) codes are shown.

TYPICAL LANE CLOSURE WITH REVERSIBLE CONTROL

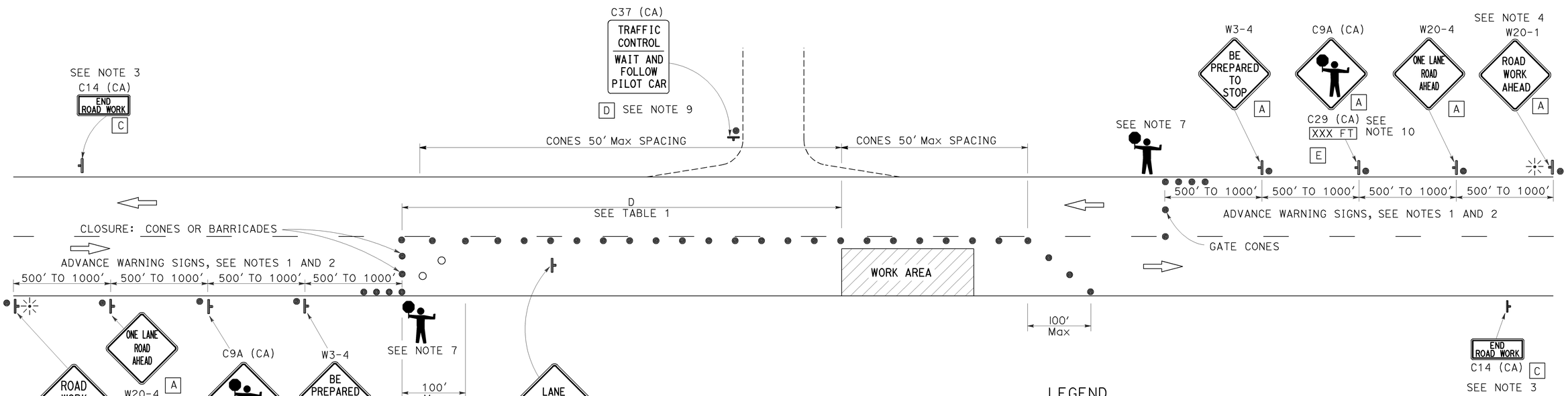

SIGN PANEL SIZE (MINIMUM)

- A — 48" x 48" - SPEED OF 45 mph OR MORE; 36" x 36" - SPEED LESS THAN 45 mph
- B — 30" x 30"
- C — 36" x 18"
- D — 36" x 42"
- E — 36" x 9"

LEGEND

- TRAFFIC CONE
- TRAFFIC CONE (OPTIONAL TAPER)
- TEMPORARY SIGN
- PORTABLE FLASHING BEACON
- FLAGGER

TABLE 1

APPROACH SPEED	MINIMUM D	DOWNGRADE MINIMUM D *		
		-3%	-6%	-9%
mph	ft	ft	ft	ft
25 AND BELOW	155	158	165	173
30	200	205	215	227
35	250	257	271	287
40	305	315	333	354
45	360	378	400	427
50	425	446	474	507
55	495	520	553	593
60	570	598	638	686
65	645	682	728	785

* USE ON SUSTAINED DOWNGRADE STEEPER THAN -3 PERCENT AND LONGER THAN 1 MILE.

NOTES:

1. Where approach speeds are low, advance warning signs may be placed at 300' spacing, and closer in urban areas.
2. Each advance warning sign in each direction of travel shall be equipped with at least two flags for daytime closure. Each flag shall be at least 16" x 16" in size and shall be orange or fluorescent red-orange in color. Flashing beacons shall be placed at the locations indicated for lane closure during hours of darkness.
3. A C14 (CA) "END ROAD WORK" sign, as appropriate, shall be placed at the end of the lane control unless the end of work area is obvious, or ends within a larger project's limits.
4. If the W20-1 sign would follow within 2000' of a stationary W20-1 or C11 (CA) "ROAD WORK NEXT _____MILES", use a W20-4 sign for the first advance warning sign.
5. All cones used for lane closures during the hours of darkness shall be fitted with retroreflective bands (or sleeves) as specified in the specifications.
6. Portable delineators, placed at one-half the spacing indicated for traffic cones, may be used instead of cones for daytime closures only.
7. Additional advance flaggers may be required. Flagger should stand in a conspicuous place, be visible to approaching traffic as well as approaching vehicles after the first vehicle has stopped. During the hours of darkness, the flagging-station and flagger shall be illuminated and clearly visible to approaching traffic. The illumination footprint of the lighting on the ground shall be at least 20' in diameter. Place a minimum of four cones at 50' intervals in advance of flagger station as shown.
8. Place C30 (CA) "LANE CLOSED" sign at 500' to 1000' intervals throughout extended work areas. They are optional if the work area is visible from the flagger station.
9. When a pilot car is used, place a C37 (CA) "TRAFFIC CONTROL-WAIT AND FOLLOW PILOT CAR" sign at all intersections within traffic control area. Signs shall be clean and visible at all times.
10. An optional C29 (CA) sign may be placed below the C9A (CA) sign.
11. Traffic cones or barricades may be placed on the optional taper as shown, barricades shall be Type I, II, or III.

STATE OF CALIFORNIA
DEPARTMENT OF TRANSPORTATION

TRAFFIC CONTROL SYSTEM FOR LANE CLOSURE ON TWO LANE CONVENTIONAL HIGHWAYS

NO SCALE

TCS-3

STATE OF CALIFORNIA - DEPARTMENT OF TRANSPORTATION
Caltrans

FUNCTIONAL SUPERVISOR | CALCULATED-DESIGNED BY | CHECKED BY | REVISED BY | DATE REVISED

LAST REVISION 03-04-13 | DATE PLOTTED => 10-DEC-2012 | TIME PLOTTED => 09:45

Dist	COUNTY	ROUTE	POST MILES TOTAL PROJECT	SHEET No.	TOTAL SHEETS
11	Imp	8	R73.1/R73.9	14	18

REGISTERED CIVIL ENGINEER 12-7-12 DATE

03-04-13
PLANS APPROVAL DATE

REGISTERED PROFESSIONAL ENGINEER Gurinderpal Bhullar No. C48815 Exp. 9-30-14 CIVIL STATE OF CALIFORNIA

THE STATE OF CALIFORNIA OR ITS OFFICERS OR AGENTS SHALL NOT BE RESPONSIBLE FOR THE ACCURACY OR COMPLETENESS OF SCANNED COPIES OF THIS PLAN SHEET.

TYPICAL RAMP CLOSURES

SIGN PANEL SIZE (Min)

- A 48" x 48"
- B 48" x 30"
- C 30" x 30"
- D 48" x 48" - SPEED OF 50 mph OR MORE
  36" x 36" - SPEED LESS THAN 50 mph
- E 48" x 36"

LEGEND

- TRAFFIC CONE
- TEMPORARY SIGN
- BARRICADES

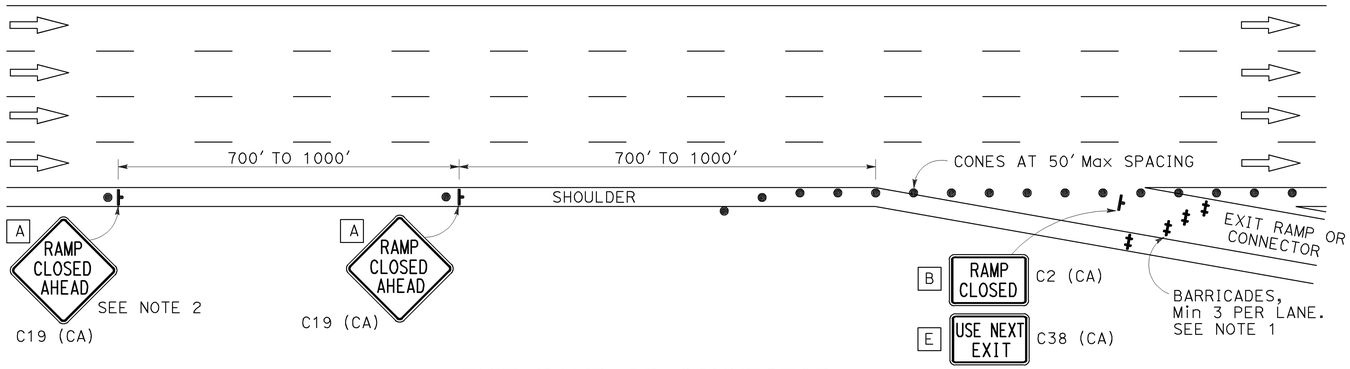

EXIT RAMP OR CONNECTOR

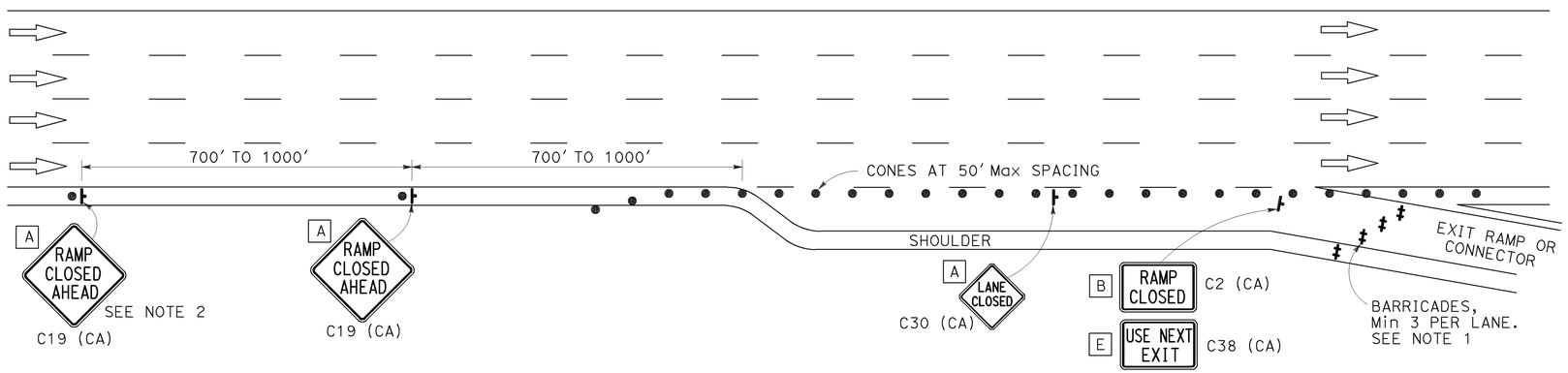

EXIT RAMP OR CONNECTOR WITH ADDITIONAL LANE

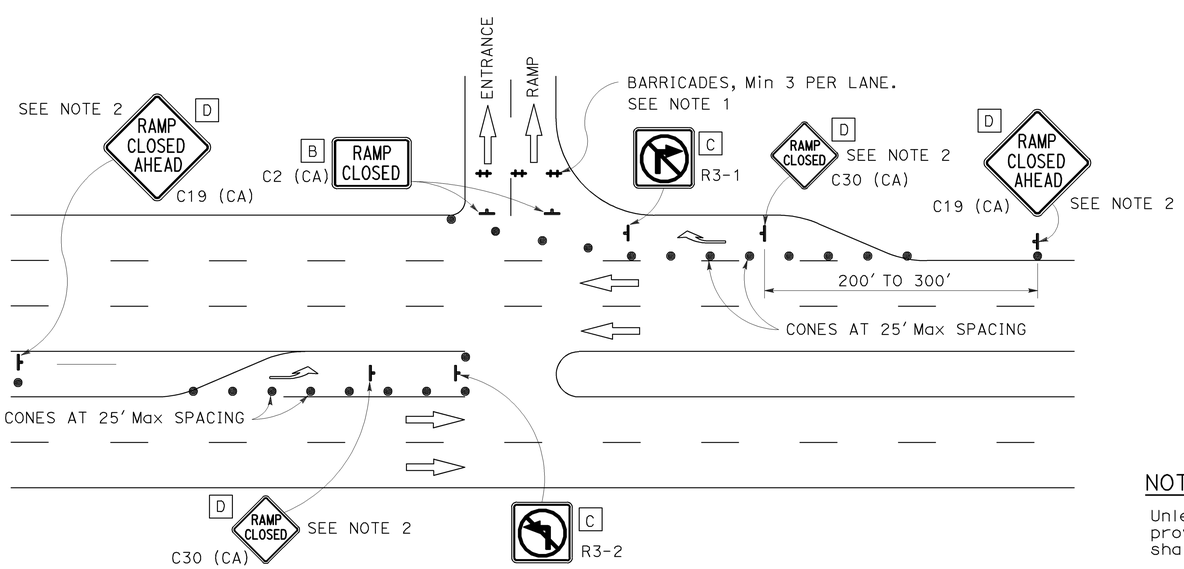

ENTRANCE RAMP WITH TURNING POCKETS

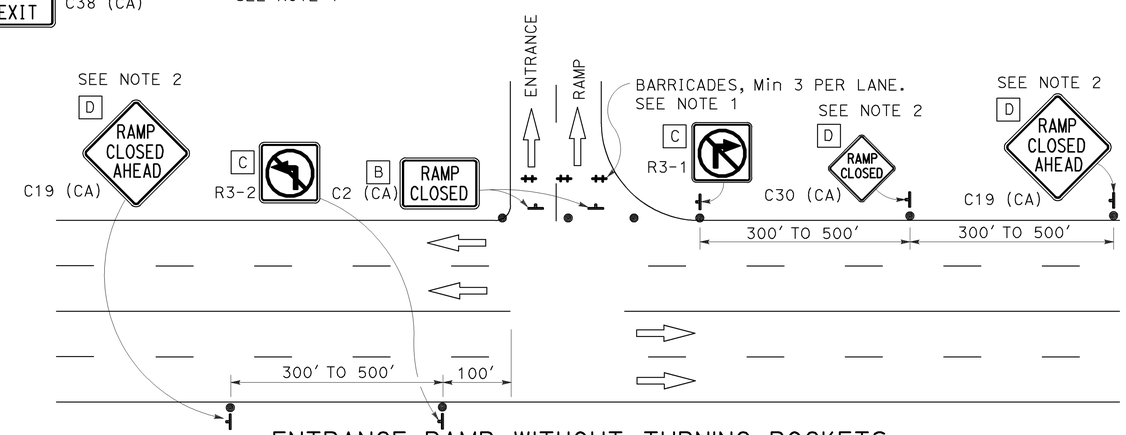

ENTRANCE RAMP WITHOUT TURNING POCKETS

NOTES:

1. Barricades shall be Type I, II, or III for closures lasting one week or less and Type III for closures lasting longer than one week.
2. In addition to placing the C19 (CA) "RAMP CLOSED AHEAD" and C30 (CA) "RAMP CLOSED" signs, black on orange overlay plates with the word "CLOSED" may be mounted, as directed by the Engineer, on all guide signs that refer to the closed ramp. The letter size on the overlay shall be the same as the guide sign.
3. Each advance C19 (CA) "RAMP CLOSED AHEAD" sign shall be equipped with at least two flags for daytime closure. Each flag shall be at least 16" x 16" in size and shall be orange or fluorescent red-orange in color.
4. All cones used for ramp closures during the hours of darkness shall be fitted with retroreflective bands (or sleeves) as specified in the specifications.
5. Portable delineators, placed at one-half the spacing indicated for traffic cones, may be used instead of cones for daytime ramp closures only.
6. At least one person shall be assigned to provide full time maintenance of traffic control devices, unless otherwise directed by the Engineer.
7. The existing "EXIT" sign in the gore area shall be covered during ramp closures.

NOTES:

Unless otherwise specified in the special provisions, all temporary warning signs shall have black legend on orange background.

California code are designated by (CA). Otherwise, Federal (MUTCD) codes are shown.

STATE OF CALIFORNIA
DEPARTMENT OF TRANSPORTATION

TRAFFIC CONTROL SYSTEM FOR RAMP CLOSURE

NO SCALE

TCS-4

STATE OF CALIFORNIA - DEPARTMENT OF TRANSPORTATION

Caltrans

FUNCTIONAL SUPERVISOR | CALCULATED-DESIGNED BY | CHECKED BY | REVISED BY | DATE REVISED

LAST REVISION 03-04-13 | DATE PLOTTED => 10-DEC-2012 | TIME PLOTTED => 09:45

Dist	COUNTY	ROUTE	POST MILES TOTAL PROJECT	SHEET No.	TOTAL SHEETS
11	Imp	8	R73.1/R73.9	15	18

REGISTERED CIVIL ENGINEER

April 20, 2012
PLANS APPROVAL DATE

REGISTERED PROFESSIONAL ENGINEER
Roberta L. McLaughlin
No. C40375
Exp. 3-31-13
CIVIL
STATE OF CALIFORNIA

THE STATE OF CALIFORNIA OR ITS OFFICERS OR AGENTS SHALL NOT BE RESPONSIBLE FOR THE ACCURACY OR COMPLETENESS OF SCANNED COPIES OF THIS PLAN SHEET.

TO ACCOMPANY PLANS DATED 03-04-13

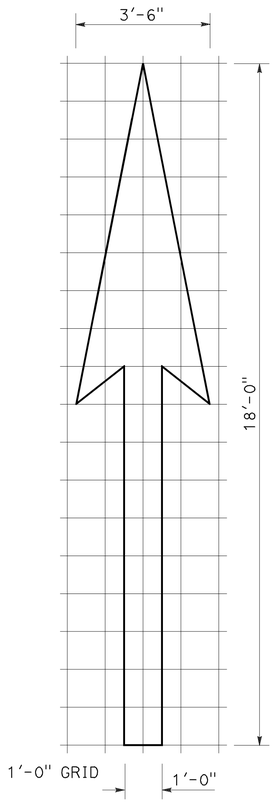

A=25 ft^2

TYPE I 18'-0" ARROW

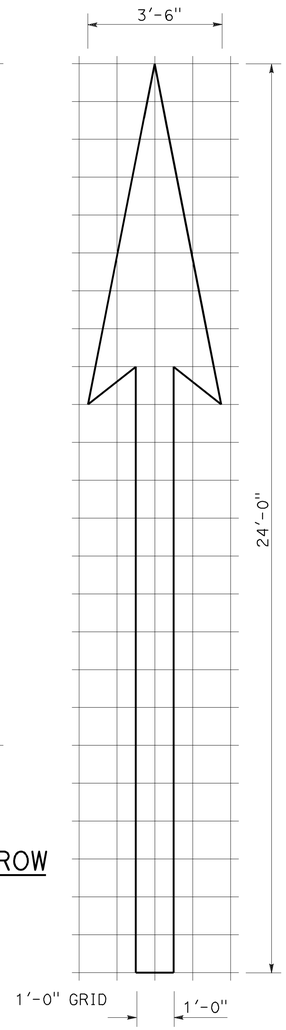

A=31 ft^2

TYPE I 24'-0" ARROW

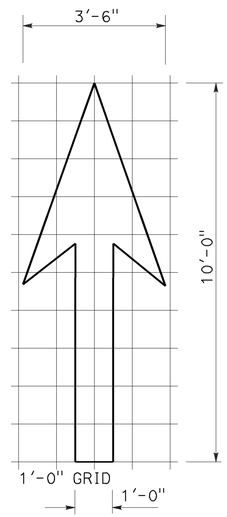

A=14 ft^2

TYPE I 10'-0" ARROW

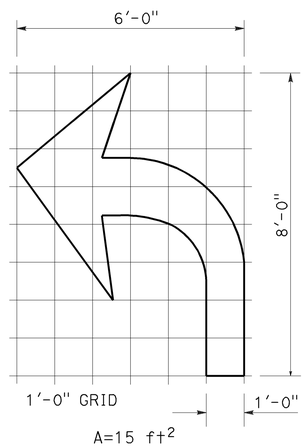

A=15 ft^2

TYPE IV (L) ARROW

(For Type IV (R) arrow, use mirror image)

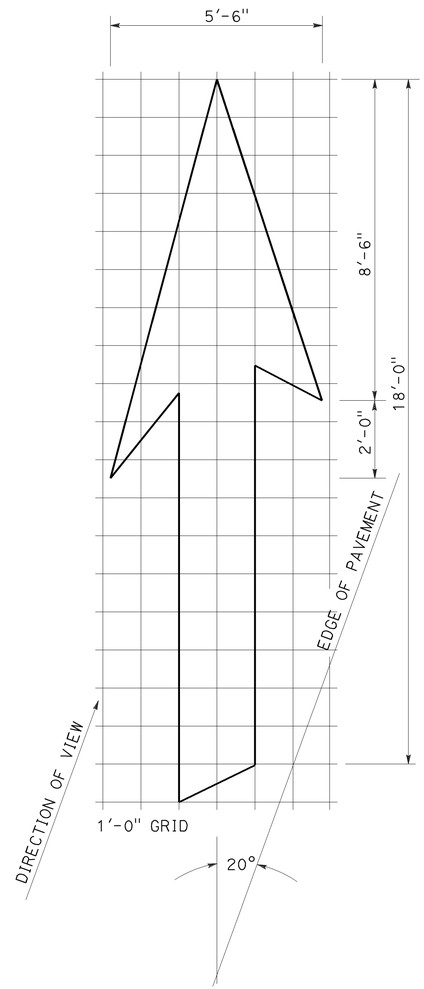

A=42 ft^2

TYPE VI ARROW

Right lane drop arrow
(For left lane, use mirror image)

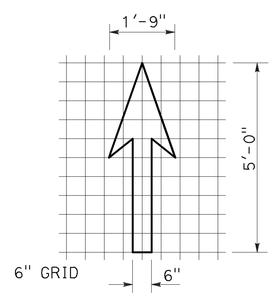

A=3.5 ft^2

BIKE LANE ARROW

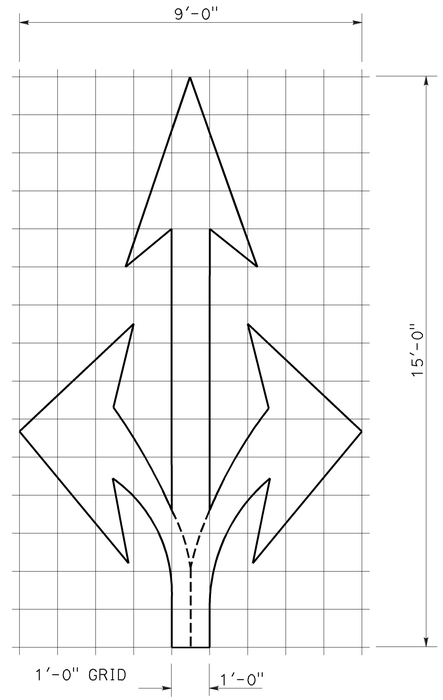

A=36 ft^2

TYPE VIII ARROW

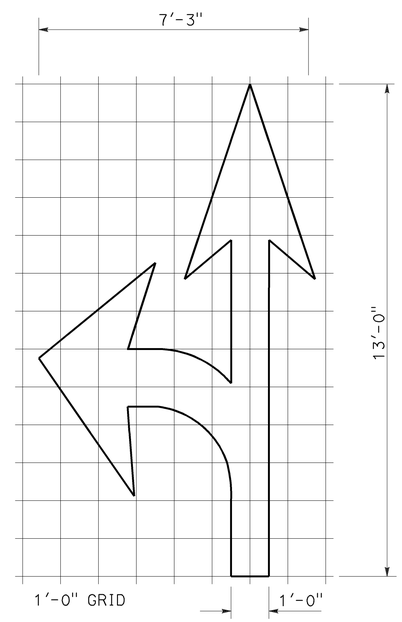

A=27 ft^2

TYPE VII (L) ARROW

(For Type VII (R) arrow, use mirror image)

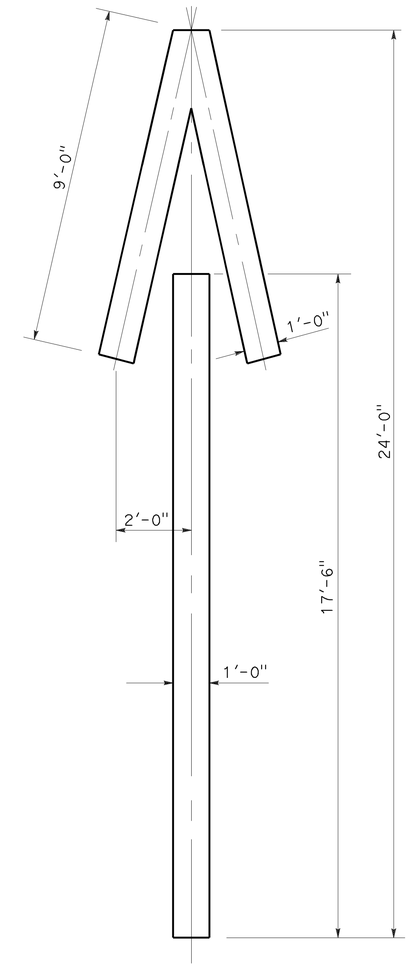

A=33 ft^2

TYPE V ARROW

NOTE:
Minor variations in dimensions may be accepted by the Engineer.

STATE OF CALIFORNIA
DEPARTMENT OF TRANSPORTATION

PAVEMENT MARKINGS ARROWS

NO SCALE

RSP A24A DATED APRIL 20, 2012 SUPERSEDES STANDARD PLAN A24A DATED MAY 20, 2011 - PAGE 13 OF THE STANDARD PLANS BOOK DATED 2010.

REVISED STANDARD PLAN RSP A24A

2010 REVISED STANDARD PLAN RSP A24A

3-14-12

Dist	COUNTY	ROUTE	POST MILES TOTAL PROJECT	SHEET No.	TOTAL SHEETS
11	Imp	8	R73.1/R73.9	16	18

REGISTERED CIVIL ENGINEER

July 20, 2012
PLANS APPROVAL DATE

REGISTERED PROFESSIONAL ENGINEER
Roberta L. McLaughlin
No. C40375
Exp. 3-31-13
CIVIL
STATE OF CALIFORNIA

THE STATE OF CALIFORNIA OR ITS OFFICERS OR AGENTS SHALL NOT BE RESPONSIBLE FOR THE ACCURACY OR COMPLETENESS OF SCANNED COPIES OF THIS PLAN SHEET.

TO ACCOMPANY PLANS DATED 03-04-13

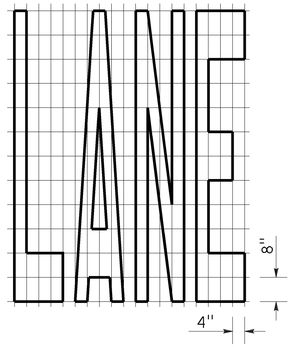

A=24 ft^2

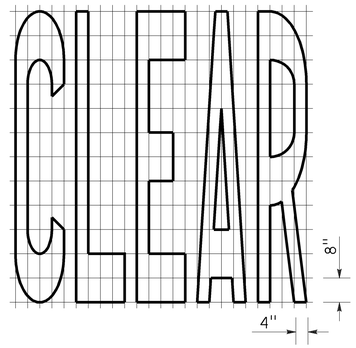

A=27 ft^2

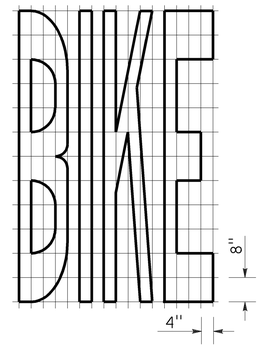

A=21 ft^2

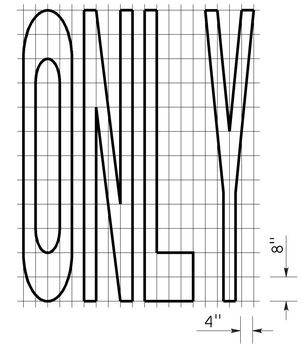

A=22 ft^2

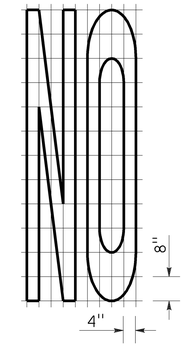

A=14 ft^2

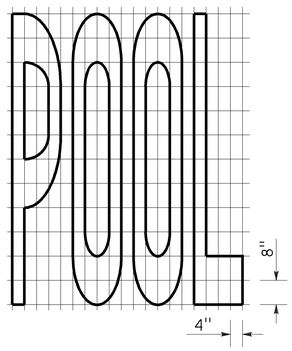

A=23 ft^2

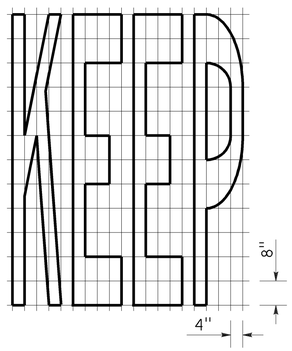

A=24 ft^2

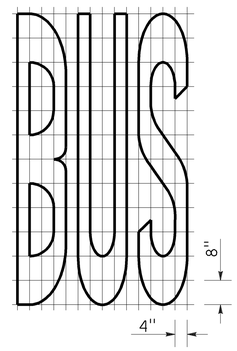

A=20 ft^2

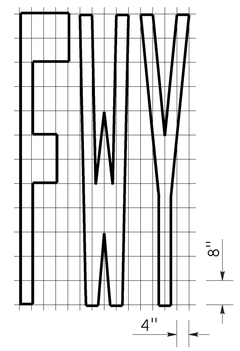

A=16 ft^2

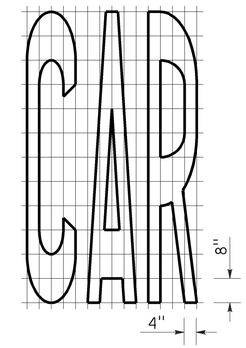

A=17 ft^2

WORD MARKINGS			
ITEM	ft^2	ITEM	ft^2
LANE	24	NO	14
POOL	23	BIKE	21
CAR	17	BUS	20
CLEAR	27	ONLY	22
KEEP	24	FWY	16

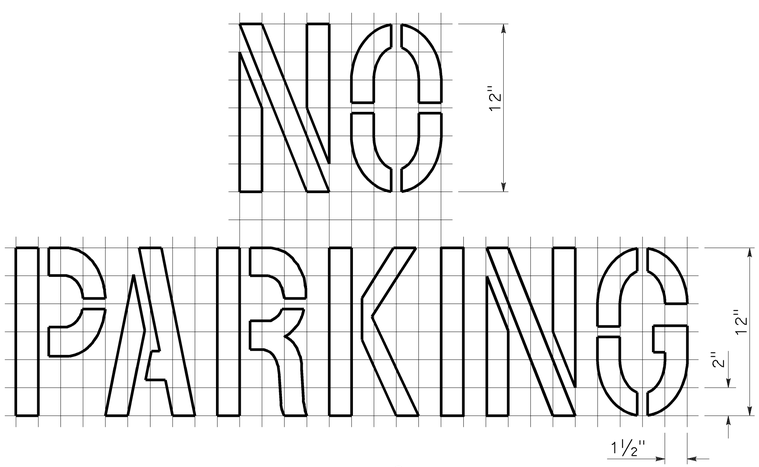

A=2 ft^2
See Notes 6 and 7

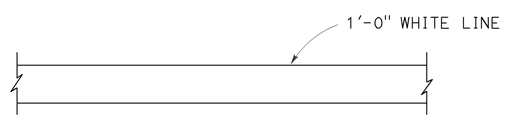

LIMIT LINE (STOP LINE)

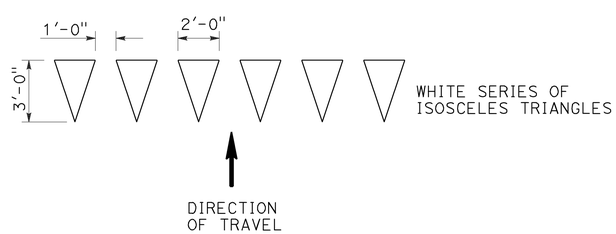

YIELD LINE

NOTES:

1. If a message consists of more than one word, it should read "UP", i.e., the first word should be nearest the driver.
2. The space between words should be at least four times the height of the characters for low speed roads, but not more than ten times the height of the characters. The space may be reduced appropriately where there is limited space because of local conditions.
3. Minor variations in dimensions may be accepted by the Engineer.
4. Portions of a letter, number or symbol may be separated by connecting segments not to exceed 2" in width.
5. The words "NO PARKING" pavement marking is to be used for parking facilities. For typical locations of markings, see Standard Plans A90A and A90B.
6. The words "NO PARKING", shall be painted in white letters no less than 1'-0" high on a contrasting background and located so that it is visible to traffic enforcement officials.

STATE OF CALIFORNIA
DEPARTMENT OF TRANSPORTATION

PAVEMENT MARKINGS WORDS, LIMIT AND YIELD LINES

NO SCALE

RSP A24E DATED JULY 20, 2012 SUPERSEDES STANDARD PLAN A24E
DATED MAY 20, 2011 - PAGE 17 OF THE STANDARD PLANS BOOK DATED 2010.

REVISED STANDARD PLAN RSP A24E

2010 REVISED STANDARD PLAN RSP A24E

6-12-12

DIST	COUNTY	ROUTE	POST MILES TOTAL PROJECT	SHEET No.	TOTAL SHEETS
11	Imp	8	R73.1/R73.9	17	18

REGISTERED CIVIL ENGINEER

January 20, 2012
PLANS APPROVAL DATE

REGISTERED PROFESSIONAL ENGINEER
Cornelis M. Hakim
No. C55610
Exp. 12-31-12
CIVIL
STATE OF CALIFORNIA

THE STATE OF CALIFORNIA OR ITS OFFICERS OR AGENTS SHALL NOT BE RESPONSIBLE FOR THE ACCURACY OR COMPLETENESS OF SCANNED COPIES OF THIS PLAN SHEET.

TO ACCOMPANY PLANS DATED 03-04-13

ABBREVIATIONS:

SE SAFETY EDGE

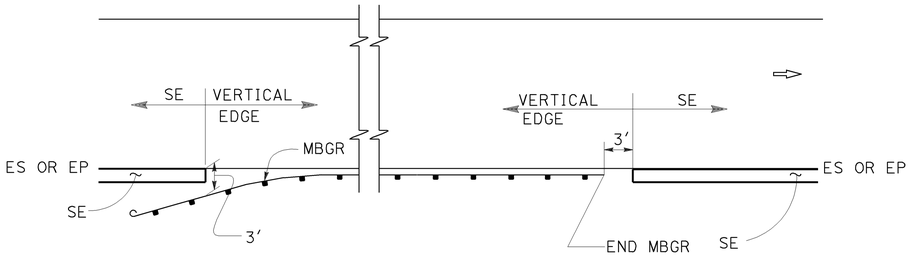

MBGR

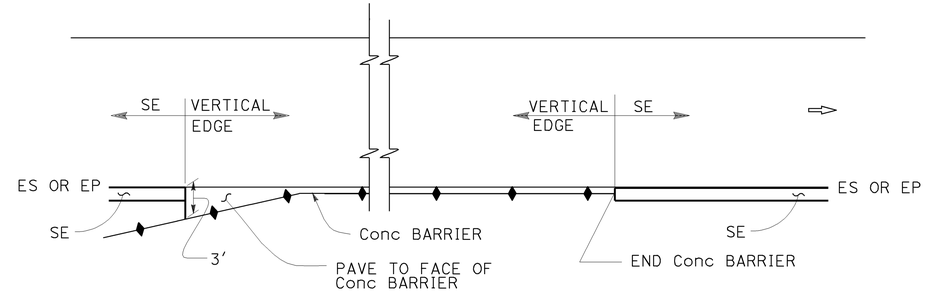

CONCRETE BARRIER

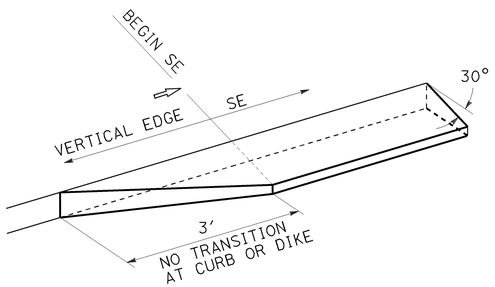

TRANSITION DETAIL FOR CONCRETE ONLY

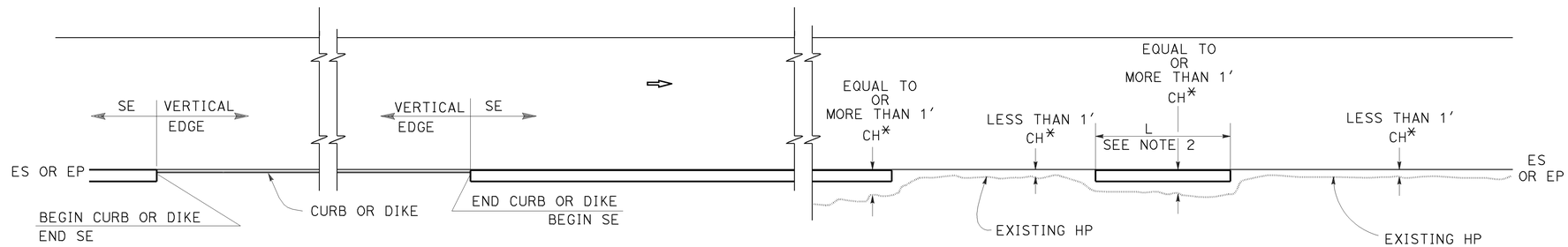

CURB OR DIKE

NARROW SIDE SLOPE

* CH = Distance from ES or EP to existing HP.

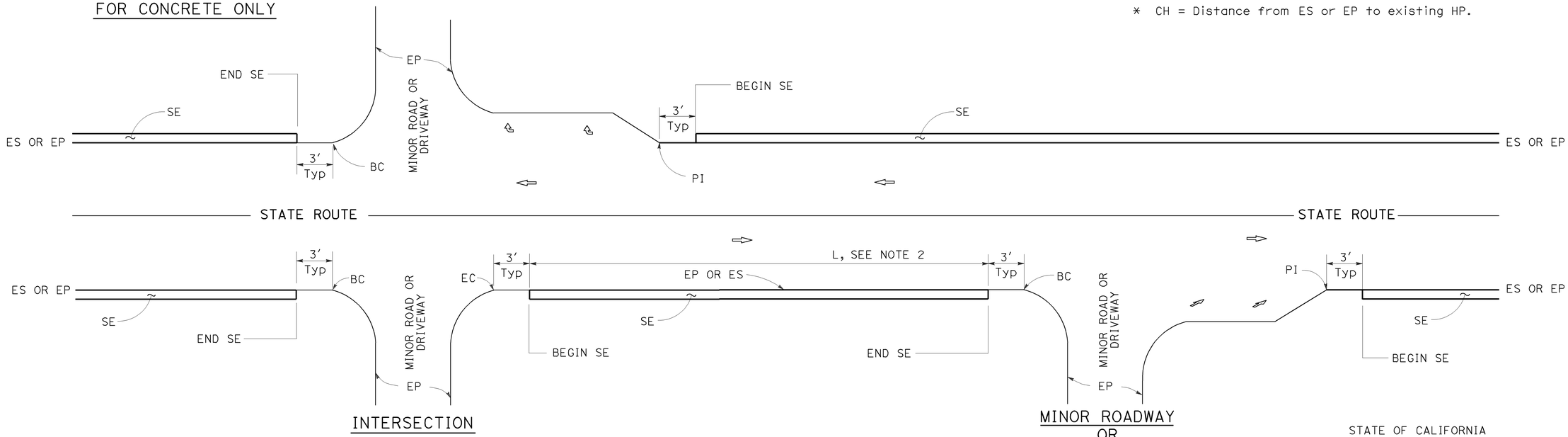

INTERSECTION

DRIVEWAY AND INTERSECTION

MINOR ROADWAY OR DRIVEWAY

NOTES:

1. For details not shown, see Revised Standard Plans RSP P75 and RSP P76.
2. Safety edge is optional when L is less than 30′.

STATE OF CALIFORNIA
DEPARTMENT OF TRANSPORTATION

PAVEMENT EDGE TREATMENTS

NO SCALE

RSP P74 DATED JANUARY 20, 2012 SUPPLEMENTS THE STANDARD PLANS BOOK DATED 2010.

REVISED STANDARD PLAN RSP P74

2010 REVISED STANDARD PLAN RSP P74

01-05-12

DIST	COUNTY	ROUTE	POST MILES TOTAL PROJECT	SHEET No.	TOTAL SHEETS
11	Imp	8	R73.1/R73.9	18	18

REGISTERED CIVIL ENGINEER

January 20, 2012
PLANS APPROVAL DATE

REGISTERED PROFESSIONAL ENGINEER
Cornelis M. Hakim
No. C55610
Exp. 12-31-12
CIVIL
STATE OF CALIFORNIA

THE STATE OF CALIFORNIA OR ITS OFFICERS OR AGENTS SHALL NOT BE RESPONSIBLE FOR THE ACCURACY OR COMPLETENESS OF SCANNED COPIES OF THIS PLAN SHEET.

TO ACCOMPANY PLANS DATED 03-04-13

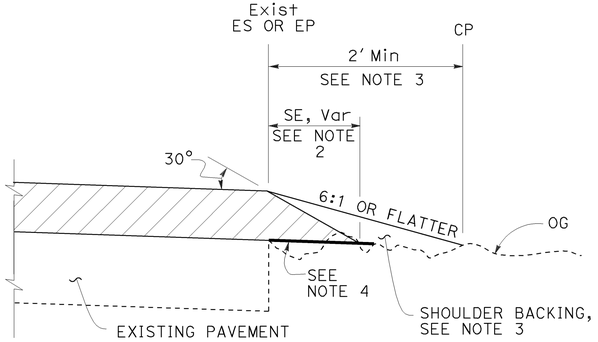

CASE A
Safety Edge

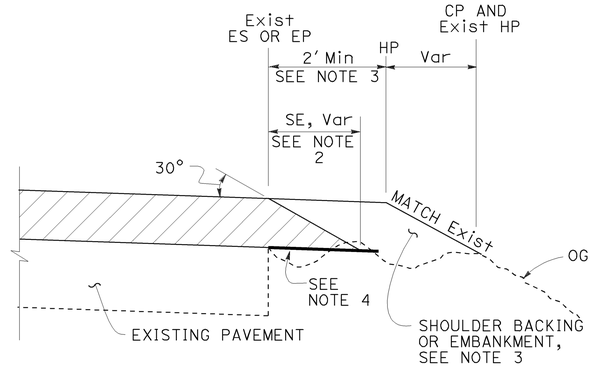

CASE B
Safety Edge

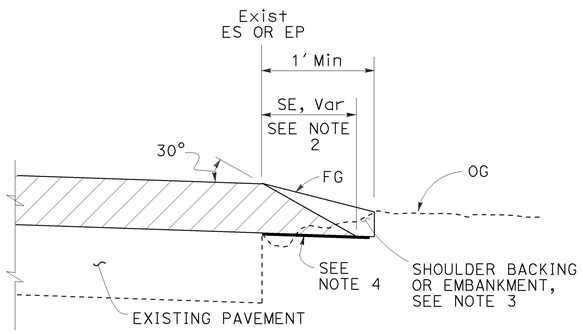

CASE C
Safety Edge

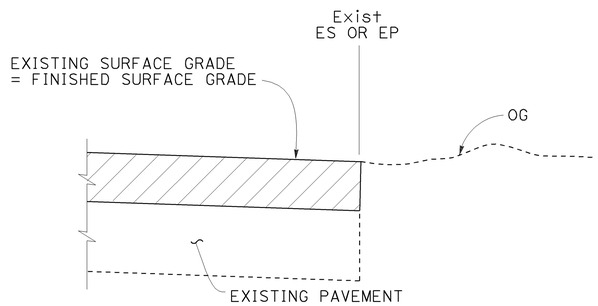

CASE D
Vertical Edge

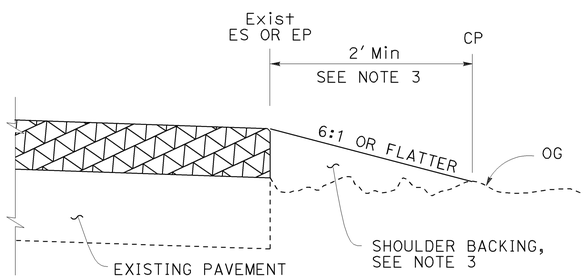

CASE E
Vertical Edge

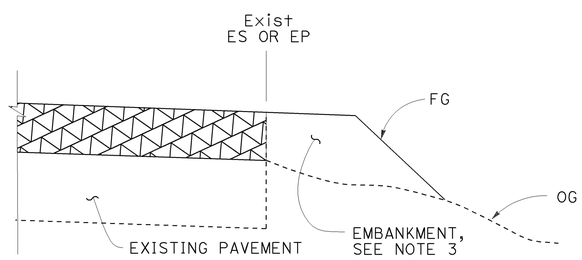

CASE F
Vertical Edge
* See Table A and Revised Std Plan RSP P74

LEGEND:

- HMA OVERLAY
- HMA OR CONCRETE OVERLAY
- CONCRETE OVERLAY

ABBREVIATIONS:

SE SAFETY EDGE
TT TOTAL THICKNESS OF SE

TABLE A
EDGE TREATMENT FOR VARIOUS OVERLAY THICKNESS AND CONDITIONS

	OVERLAY THICKNESS	
FIELD CONDITION	LESS THAN 0.15′	0.15′ OR MORE
Exist SLOPE 6:1 OR FLATTER	CASE E	CASE A
Exist SLOPE 3:1 TO 6:1	CASE E	CASE B
Exist SLOPE STEEPER THAN 3:1	CASE F	CASE F
CUT SECTION (REPLACE, COLD PLANE, MILL PAVEMENT)	CASE D	CASE C

ADDITIONAL HMA OR CONCRETE QUANTITIES FOR SE/SIDE/MILE

TYPICAL CROSS SECTION	TT	TOTAL ADDITIONAL MATERIAL FOR SE/SIDE/MILE		
		HMA (TON)	CONCRETE (CY)*	CONCRETE (CY)**
TT	0.15′	NA	NA	NA
	0.20′	13.7	NA	NA
	0.30′	30.9	NA	NA
	0.40′	54.9	NA	NA
	0.45′	69.4	NA	NA
TT 0.43′	0.50′	84.2	NA	NA
	0.60′	113.9	NA	NA
	0.70′	143.6	70.9	94.2
	0.80′	173.3	85.6	112.2
	0.90′	203.0	100.3	130.2
	1.00′	232.7	114.9	148.2
	1.10′	262.4	129.6	166.2
	1.20′	292.1	144.3	184.2

* For Detail "A"
** For Optional Detail "A"

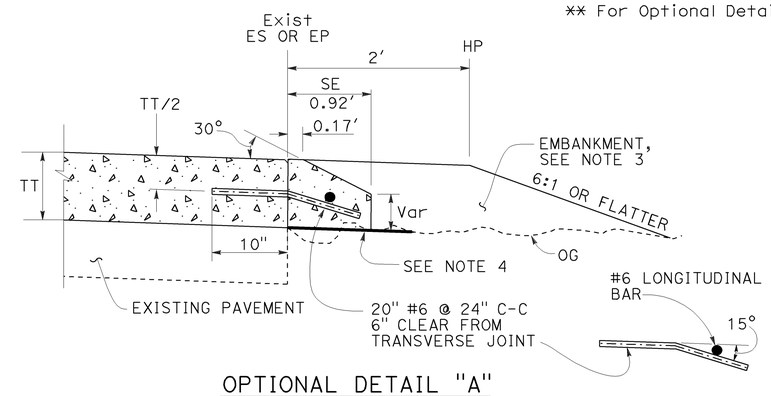

OPTIONAL DETAIL "A"
For concrete overlay
See Note 5

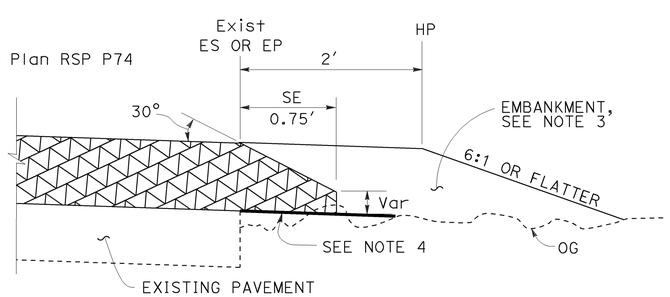

DETAIL "A"
For HMA overlay thickness more than 0.43′ or concrete overlay

NOTES:

1. For limits of safety edge and vertical edge treatments, see Revised Standard Plan RSP P74.
2. Details shown for HMA overlay thickness less than 0.43′. See Detail "A" for HMA overlay thickness more than 0.43′ or concrete overlay.
3. For locations and limits of shoulder backing or embankment see project plans.
4. Grade existing ground to place safety edge. 1′ minimum width
5. Safety edge transverse joint must match overlay transverse joint. End of #6 longitudinal bar must be 2" ±½" clear from transverse joint.
6. Safety edge is not needed in the area of MBGR, barrier, right turn lane and acceleration lane. See Revised Standard Plan RSP P74.

STATE OF CALIFORNIA
DEPARTMENT OF TRANSPORTATION

PAVEMENT EDGE TREATMENTS-OVERLAYS

NO SCALE

RSP P75 DATED JANUARY 20, 2012 SUPPLEMENTS THE STANDARD PLANS BOOK DATED 2010.

REVISED STANDARD PLAN RSP P75

2010 REVISED STANDARD PLAN RSP P75