NOTE:

1. FOR COMPLETE RIGHT OF WAY AND ACCURATE ACCESS DATA, SEE RIGHT OF WAY RECORD MAPS AT DISTRICT OFFICE.

Dist	COUNTY	ROUTE	POST MILES TOTAL PROJECT	SHEET No.	TOTAL SHEETS
12	Ora	22,405, 605	R0.3/R0.9, 22.3/24.0,3.0/R1.6	301	1929

REGISTERED CIVIL ENGINEER — 12/22/09 DATE

2-1-10
PLANS APPROVAL DATE

REGISTERED PROFESSIONAL ENGINEER — JULIET SU No. C56168 Exp.12/31/10 CIVIL — STATE OF CALIFORNIA

THE STATE OF CALIFORNIA OR ITS OFFICERS OR AGENTS SHALL NOT BE RESPONSIBLE FOR THE ACCURACY OR COMPLETENESS OF ELECTRONIC COPIES OF THIS PLAY SHEET.

MTS
16795 VON KARMAN AVE
SUITE 205
IRVINE, CA 92606

ORANGE COUNTY
TRANSPORTATION AUTHORITY
550 S. MAIN STREET
ORANGE, CA 92863-1584

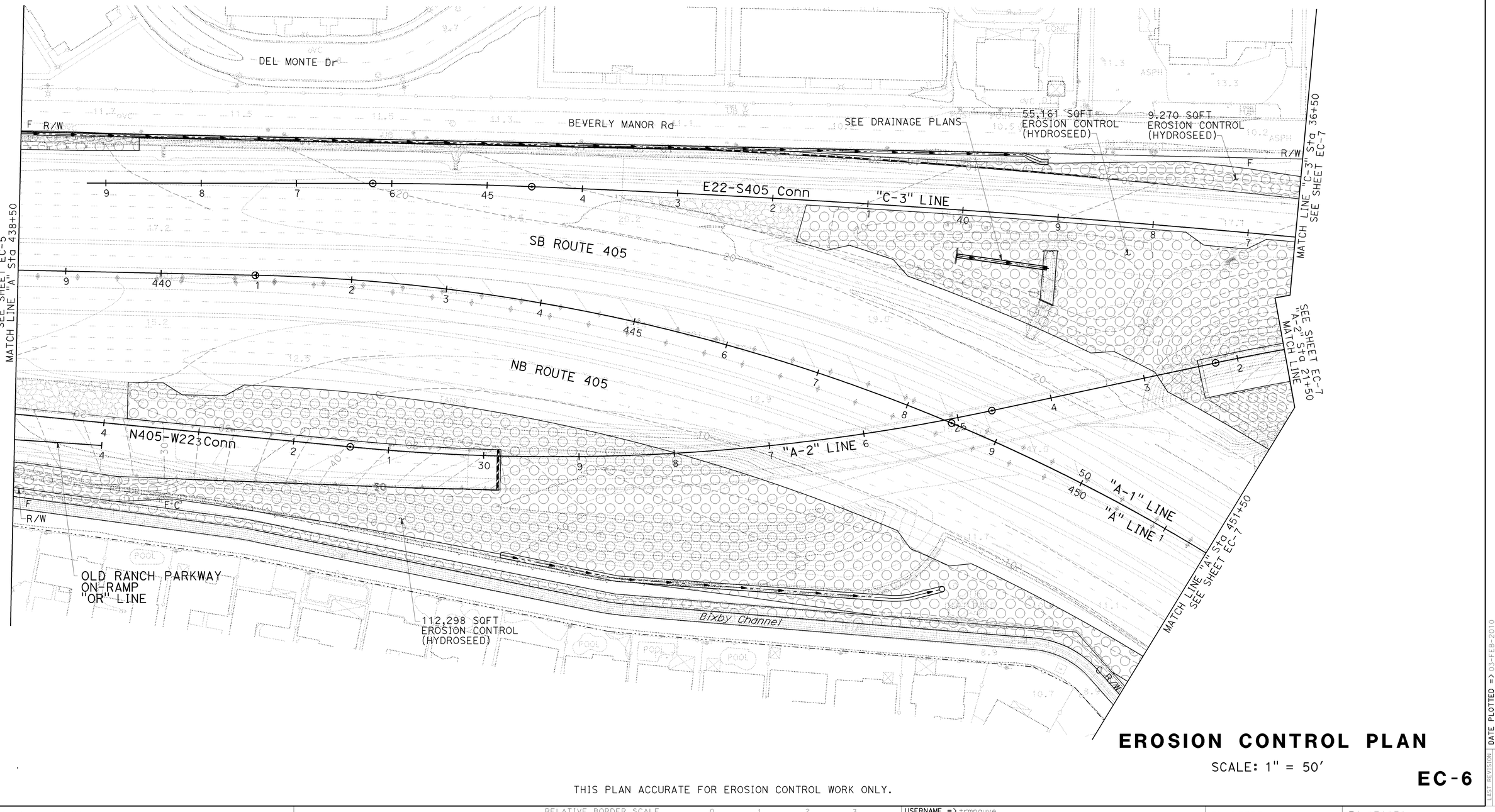

EROSION CONTROL PLAN

SCALE: 1" = 50'

EC-6

THIS PLAN ACCURATE FOR EROSION CONTROL WORK ONLY.

REVISED BY	KLA		
DATE REVISED	12/22/09		
KELSIE ANDERSON			
JULIET SU			
CALCULATED-DESIGNED BY			
CHECKED BY			
CONSULTANT FUNCTIONAL SUPERVISOR	LEONARD SEQUEIRA		
STATE OF CALIFORNIA - DEPARTMENT OF TRANSPORTATION	Caltrans		

LAST REVISION DATE PLOTTED => 03-FEB-2010
08-10-09 TIME PLOTTED => 08:21

BORDER LAST REVISED 8/1/2008 | RELATIVE BORDER SCALE IS IN INCHES 0 1 2 3 | USERNAME => trmnguye DGN FILE => c07163ge006.dgn | CU 12235 | EA 071631

NOTE:

1. FOR COMPLETE RIGHT OF WAY AND ACCURATE ACCESS DATA, SEE RIGHT OF WAY RECORD MAPS AT DISTRICT OFFICE.

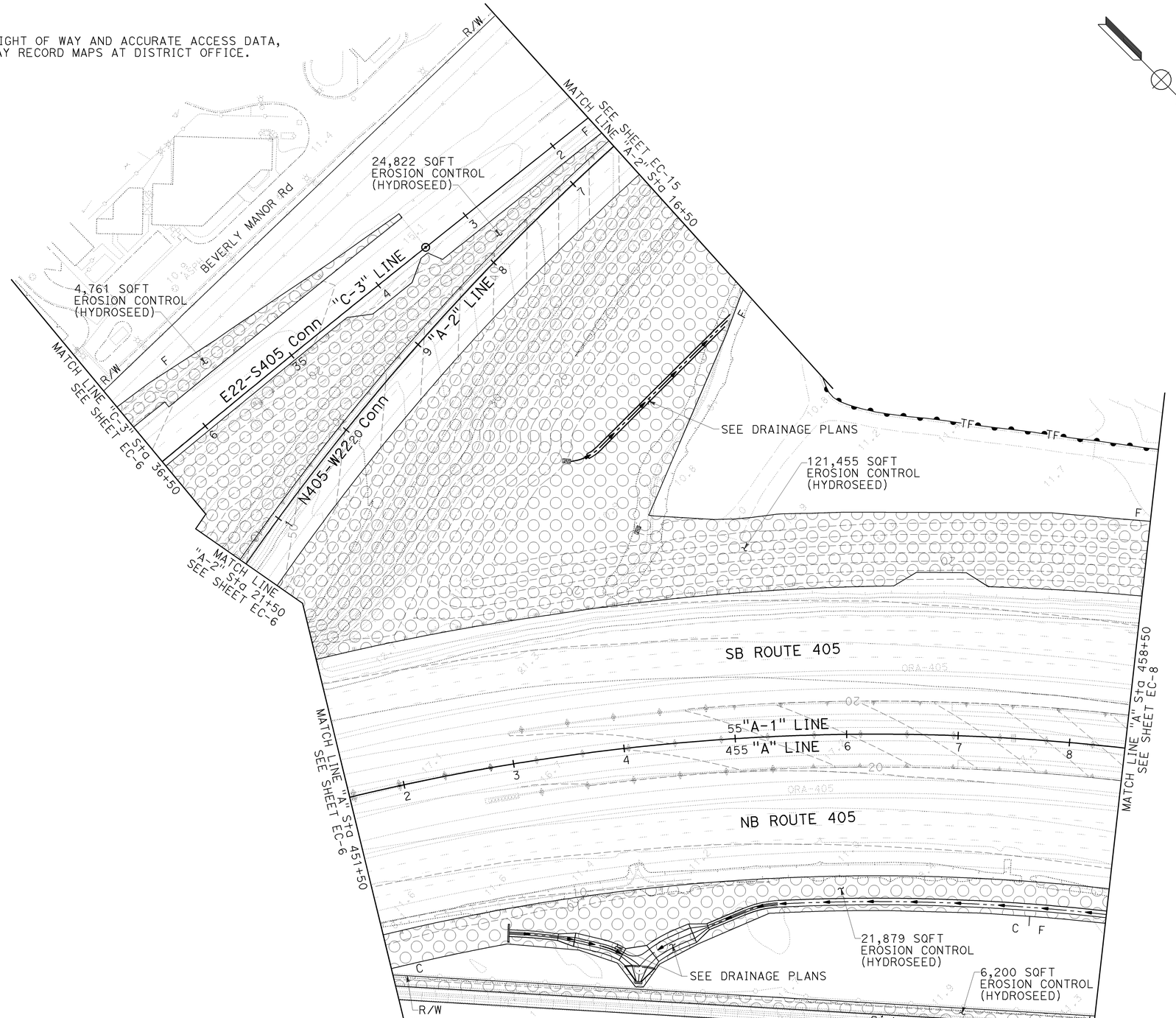

Dist	COUNTY	ROUTE	POST MILES TOTAL PROJECT	SHEET No.	TOTAL SHEETS
12	Ora	22,405, 605	R0.3/R0.9, 22.3/24.0,3.0/R1.6	302	1929

REGISTERED CIVIL ENGINEER — 12/22/09 DATE

JULIET SU No. C56168 Exp.12/31/10 CIVIL — REGISTERED PROFESSIONAL ENGINEER — STATE OF CALIFORNIA

2-1-10
PLANS APPROVAL DATE

THE STATE OF CALIFORNIA OR ITS OFFICERS OR AGENTS SHALL NOT BE RESPONSIBLE FOR THE ACCURACY OR COMPLETENESS OF ELECTRONIC COPIES OF THIS PLAN SHEET.

MTS
16795 VON KARMAN AVE
SUITE 205
IRVINE, CA 92606

ORANGE COUNTY
TRANSPORTATION AUTHORITY
550 S. MAIN STREET
ORANGE, CA 92863-1584

EROSION CONTROL PLAN

SCALE: 1" = 50'

EC-7

THIS PLAN ACCURATE FOR EROSION CONTROL WORK ONLY.

REVISED BY	DATE REVISED
KLA	12/22/09

CALCULATED-DESIGNED BY: KELSIE ANDERSON
CHECKED BY: JULIET SU

CONSULTANT FUNCTIONAL SUPERVISOR: LEONARD SEQUEIRA

STATE OF CALIFORNIA - DEPARTMENT OF TRANSPORTATION
Caltrans

LAST REVISION DATE PLOTTED => 03-FEB-2010
TIME PLOTTED => 08:22
08-10-09

BORDER LAST REVISED 8/1/2008

RELATIVE BORDER SCALE IS IN INCHES 0 1 2 3

USERNAME => trmnguye
DGN FILE => c07163ge007.dgn

CU 12235

EA 071631

NOTE:

1. FOR COMPLETE RIGHT OF WAY AND ACCURATE ACCESS DATA, SEE RIGHT OF WAY RECORD MAPS AT DISTRICT OFFICE.

Dist	COUNTY	ROUTE	POST MILES TOTAL PROJECT	SHEET No.	TOTAL SHEETS
12	Ora	22,405, 605	R0.3/R0.9, 22.3/24.0,3.0/R1.6	303	1929

REGISTERED CIVIL ENGINEER — 12/22/09 DATE

2-1-10
PLANS APPROVAL DATE

REGISTERED PROFESSIONAL ENGINEER
JULIET SU
No. C56168
Exp.12/31/10
CIVIL
STATE OF CALIFORNIA

THE STATE OF CALIFORNIA OR ITS OFFICERS OR AGENTS SHALL NOT BE RESPONSIBLE FOR THE ACCURACY OR COMPLETENESS OF ELECTRONIC COPIES OF THIS PLAN SHEET.

MTS 16795 VON KARMAN AVE SUITE 205 IRVINE, CA 92606	ORANGE COUNTY TRANSPORTATION AUTHORITY 550 S. MAIN STREET ORANGE, CA 92863-1584

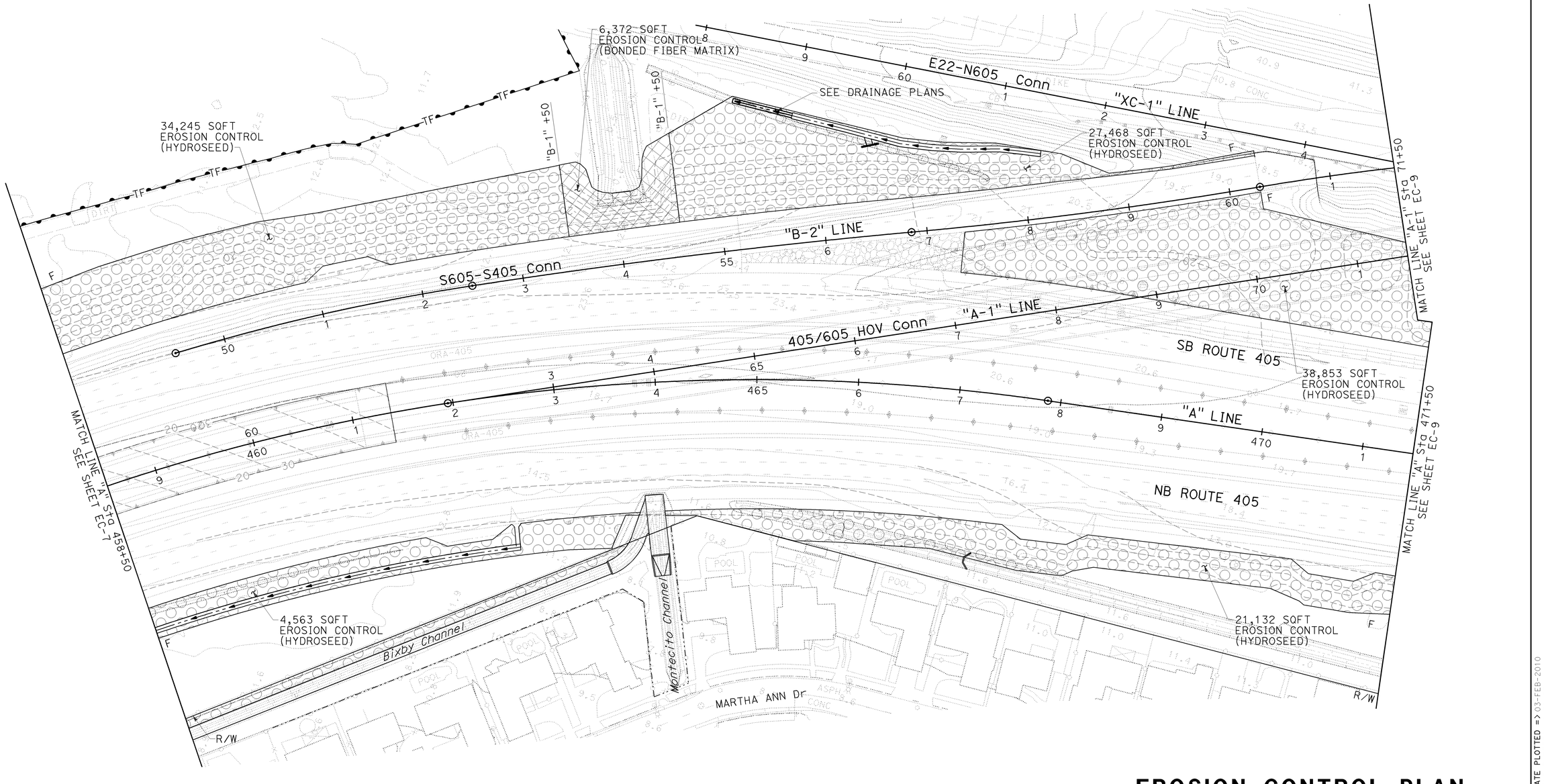

EROSION CONTROL PLAN

SCALE: 1" = 50'

EC-8

THIS PLAN ACCURATE FOR EROSION CONTROL WORK ONLY.

REVISED BY	DATE REVISED
KLA	12/22/09

CALCULATED-DESIGNED BY: KELSIE ANDERSON
CHECKED BY: JULIET SU

CONSULTANT FUNCTIONAL SUPERVISOR: LEONARD SEQUEIRA

STATE OF CALIFORNIA - DEPARTMENT OF TRANSPORTATION
Caltrans

LAST REVISION: DATE PLOTTED => 03-FEB-2010
08-10-09 TIME PLOTTED => 08:22

BORDER LAST REVISED 8/1/2008 | RELATIVE BORDER SCALE IS IN INCHES 0 1 2 3 | USERNAME => trmnguye DGN FILE => c071163ge008.dgn | CU 12235 | EA 071631

Dist	COUNTY	ROUTE	POST MILES TOTAL PROJECT	SHEET No.	TOTAL SHEETS
12	Ora	22,405, 605	R0.3/R0.9, 22.3/24.0,3.0/R1.6	304	1929

REGISTERED CIVIL ENGINEER — 8/10/09 DATE

2-1-10
PLANS APPROVAL DATE

REGISTERED PROFESSIONAL ENGINEER
JULIET SU
No. C56168
Exp.12/31/10
CIVIL
STATE OF CALIFORNIA

THE STATE OF CALIFORNIA OR ITS OFFICERS OR AGENTS SHALL NOT BE RESPONSIBLE FOR THE ACCURACY OR COMPLETENESS OF ELECTRONIC COPIES OF THIS PLAN SHEET.

MTS
16795 VON KARMAN AVE
SUITE 205
IRVINE, CA 92606

ORANGE COUNTY
TRANSPORTATION AUTHORITY
550 S. MAIN STREET
ORANGE, CA 92863-1584

NOTE:

1. FOR COMPLETE RIGHT OF WAY AND ACCURATE ACCESS DATA, SEE RIGHT OF WAY RECORD MAPS AT DISTRICT OFFICE.

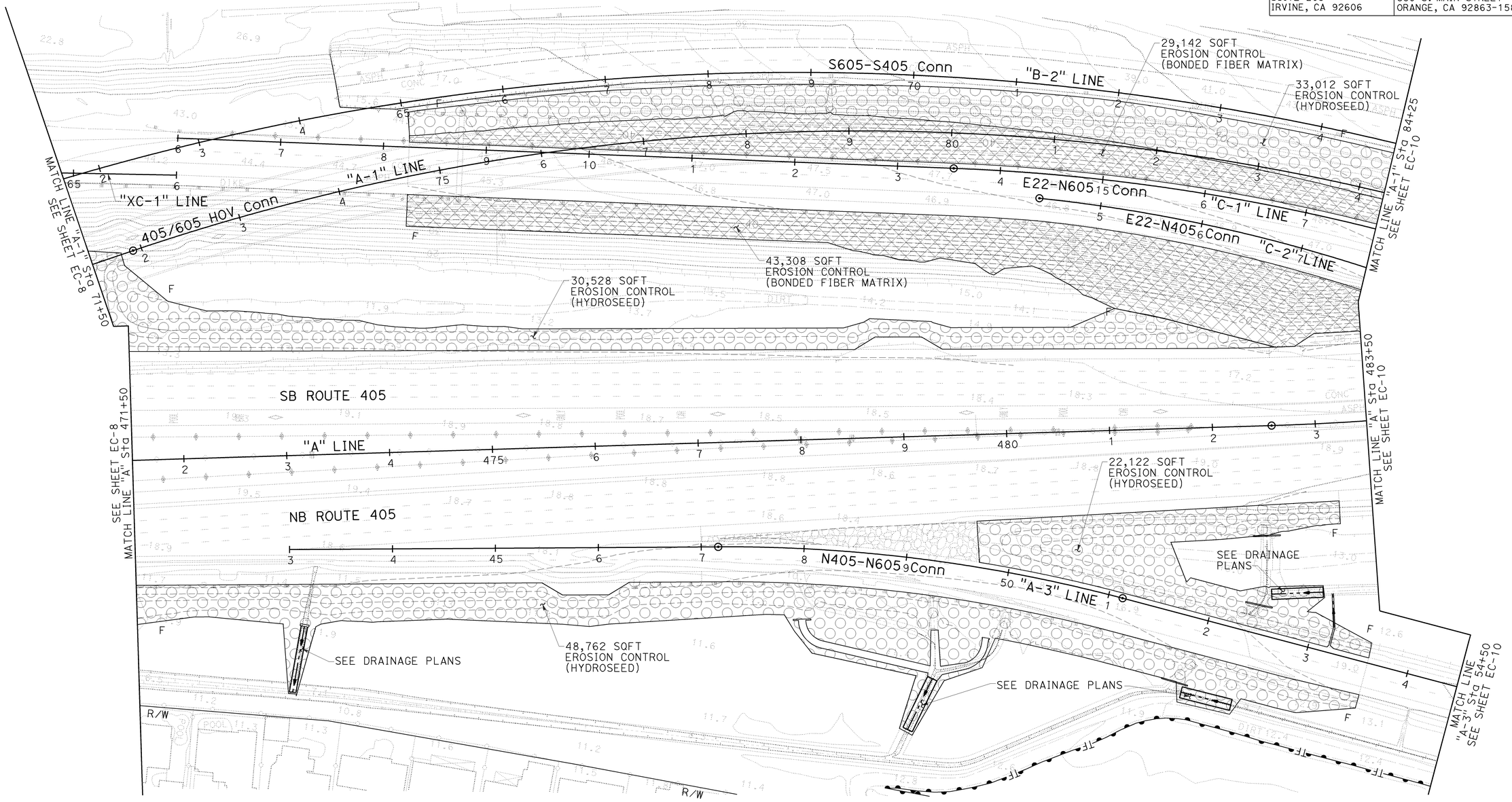

EROSION CONTROL PLAN

SCALE: 1" = 50'

EC-9

THIS PLAN ACCURATE FOR EROSION CONTROL WORK ONLY.

REVISED BY	DATE REVISED
KLA	8/10/09

CALCULATED-DESIGNED BY: KELSIE ANDERSON
CHECKED BY: JULIET SU
CONSULTANT FUNCTIONAL SUPERVISOR: LEONARD SEQUEIRA

STATE OF CALIFORNIA - DEPARTMENT OF TRANSPORTATION
Caltrans

LAST REVISION 08-10-09
DATE PLOTTED => 03-FEB-2010
TIME PLOTTED => 08:22

BORDER LAST REVISED 8/1/2008
RELATIVE BORDER SCALE IS IN INCHES 0 1 2 3
USERNAME => trmnguye
DGN FILE => c07163ge009.dgn
CU 12235
EA 071631

Dist	COUNTY	ROUTE	POST MILES TOTAL PROJECT	SHEET No.	TOTAL SHEETS
12	Ora	22,405, 605	R0.3/R0.9, 22.3/24.0,3.0/R1.6	305	1929

REGISTERED CIVIL ENGINEER — 8/10/09 DATE

2-1-10
PLANS APPROVAL DATE

REGISTERED PROFESSIONAL ENGINEER
JULIET SU
No. C56168
Exp.12/31/10
CIVIL
STATE OF CALIFORNIA

THE STATE OF CALIFORNIA OR ITS OFFICERS OR AGENTS SHALL NOT BE RESPONSIBLE FOR THE ACCURACY OR COMPLETENESS OF ELECTRONIC COPIES OF THIS PLAN SHEET.

MTS
16795 VON KARMAN AVE
SUITE 205
IRVINE, CA 92606

ORANGE COUNTY
TRANSPORTATION AUTHORITY
550 S. MAIN STREET
ORANGE, CA 92863-1584

NOTE:

1. FOR COMPLETE RIGHT OF WAY AND ACCURATE ACCESS DATA, SEE RIGHT OF WAY RECORD MAPS AT DISTRICT OFFICE.

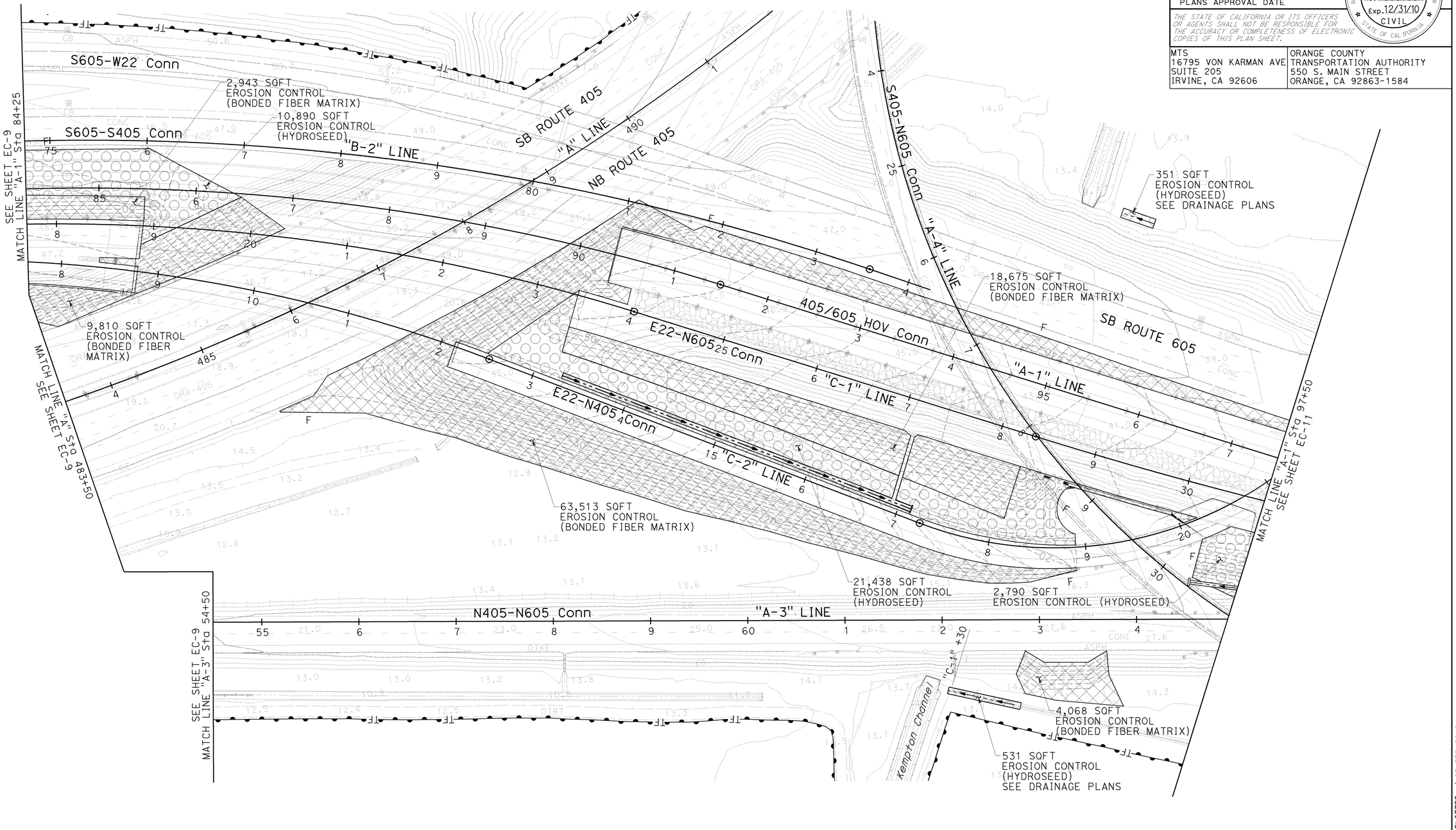

EROSION CONTROL PLAN

SCALE: 1" = 50'

EC-10

THIS PLAN ACCURATE FOR EROSION CONTROL WORK ONLY.

REVISED BY	DATE REVISED
KLA	8/10/09

CALCULATED-DESIGNED BY: KELSIE ANDERSON
CHECKED BY: JULIET SU
CONSULTANT FUNCTIONAL SUPERVISOR: LEONARD SEQUEIRA
STATE OF CALIFORNIA - DEPARTMENT OF TRANSPORTATION
Caltrans

LAST REVISION: 08-10-09
DATE PLOTTED => 03-FEB-2010
TIME PLOTTED => 08:22

BORDER LAST REVISED 8/1/2008
RELATIVE BORDER SCALE IS IN INCHES 0 1 2 3
USERNAME => trmnguye
DGN FILE => c07163ge010.dgn
CU 12235
EA 071631

NOTE:

1. FOR COMPLETE RIGHT OF WAY AND ACCURATE ACCESS DATA, SEE RIGHT OF WAY RECORD MAPS AT DISTRICT OFFICE.

Dist	COUNTY	ROUTE	POST MILES TOTAL PROJECT	SHEET No.	TOTAL SHEETS
12	Ora	22,405, 605	R0.3/R0.9, 22.3/24.0,3.0/R1.6	306	1929

REGISTERED CIVIL ENGINEER — 8/10/09 DATE

2-1-10
PLANS APPROVAL DATE

REGISTERED PROFESSIONAL ENGINEER — JULIET SU No. C56168 Exp.12/31/10 CIVIL — STATE OF CALIFORNIA

THE STATE OF CALIFORNIA OR ITS OFFICERS OR AGENTS SHALL NOT BE RESPONSIBLE FOR THE ACCURACY OR COMPLETENESS OF ELECTRONIC COPIES OF THIS PLAN SHEET.

MTS
16795 VON KARMAN AVE
SUITE 205
IRVINE, CA 92606

ORANGE COUNTY
TRANSPORTATION AUTHORITY
550 S. MAIN STREET
ORANGE, CA 92863-1584

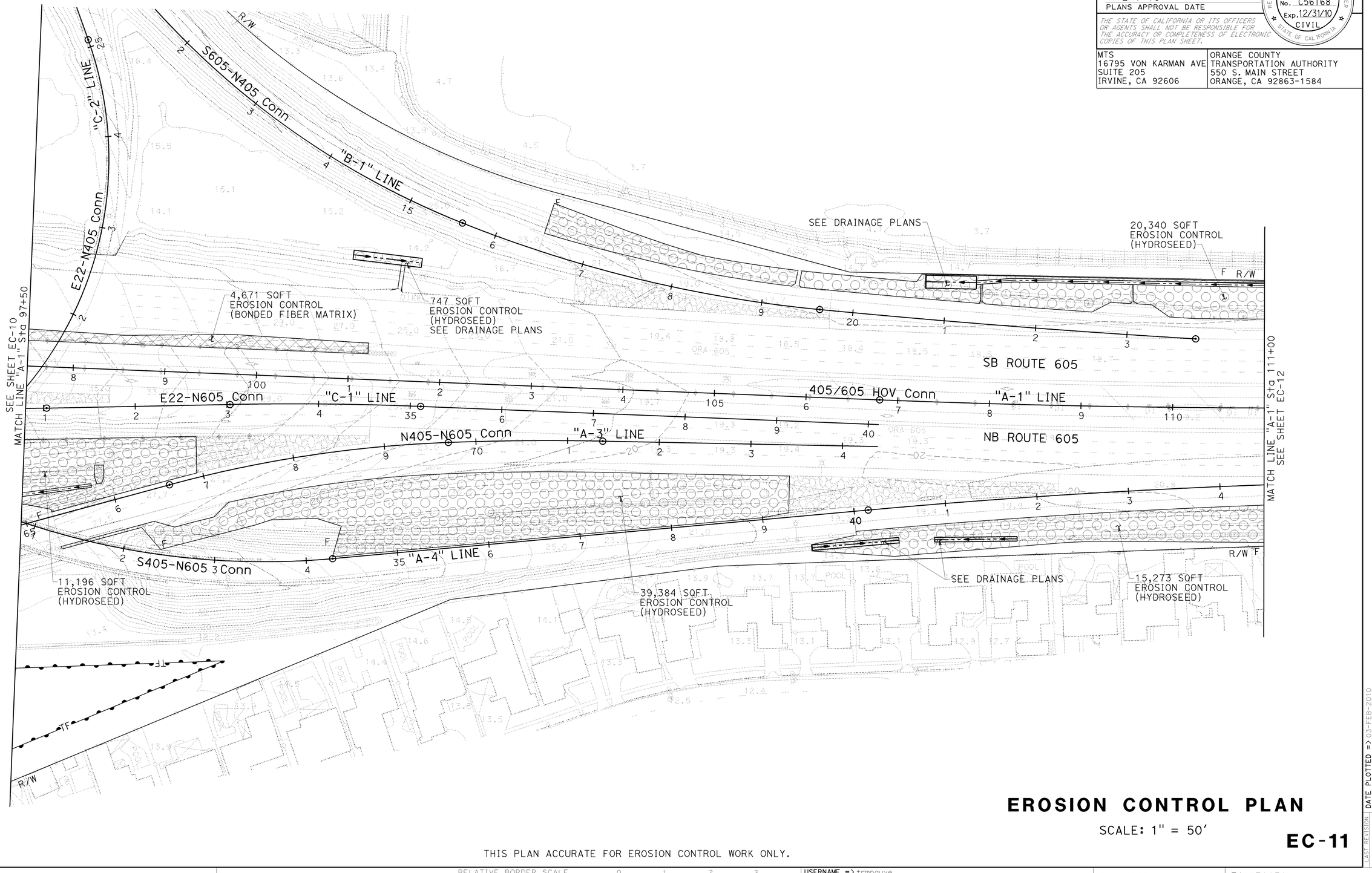

EROSION CONTROL PLAN

SCALE: 1" = 50'

EC-11

THIS PLAN ACCURATE FOR EROSION CONTROL WORK ONLY.

CALCULATED-DESIGNED BY	KELSIE ANDERSON	
CHECKED BY	JULIET SU	
CONSULTANT FUNCTIONAL SUPERVISOR	LEONARD SEQUEIRA	
REVISED BY	KLA	
DATE REVISED	8/10/09	

STATE OF CALIFORNIA - DEPARTMENT OF TRANSPORTATION

Caltrans

LAST REVISION: DATE PLOTTED => 03-FEB-2010
08-10-09 TIME PLOTTED => 08:22

BORDER LAST REVISED 8/1/2008

RELATIVE BORDER SCALE IS IN INCHES 0 1 2 3

USERNAME => trmnguye
DGN FILE => c07163ge011.dgn

CU 12235

EA 071631

NOTE:

1. FOR COMPLETE RIGHT OF WAY AND ACCURATE ACCESS DATA, SEE RIGHT OF WAY RECORD MAPS AT DISTRICT OFFICE.

Dist	COUNTY	ROUTE	POST MILES TOTAL PROJECT	SHEET No.	TOTAL SHEETS
12	Ora	22,405, 605	R0.3/R0.9, 22.3/24.0,3.0/R1.6	307	1929

REGISTERED CIVIL ENGINEER — 8/10/09 DATE

2-1-10
PLANS APPROVAL DATE

REGISTERED PROFESSIONAL ENGINEER
JULIET SU
No. C56168
Exp.12/31/10
CIVIL
STATE OF CALIFORNIA

THE STATE OF CALIFORNIA OR ITS OFFICERS OR AGENTS SHALL NOT BE RESPONSIBLE FOR THE ACCURACY OR COMPLETENESS OF ELECTRONIC COPIES OF THIS PLAN SHEET.

MTS 16795 VON KARMAN AVE SUITE 205 IRVINE, CA 92606	ORANGE COUNTY TRANSPORTATION AUTHORITY 550 S. MAIN STREET ORANGE, CA 92863-1584

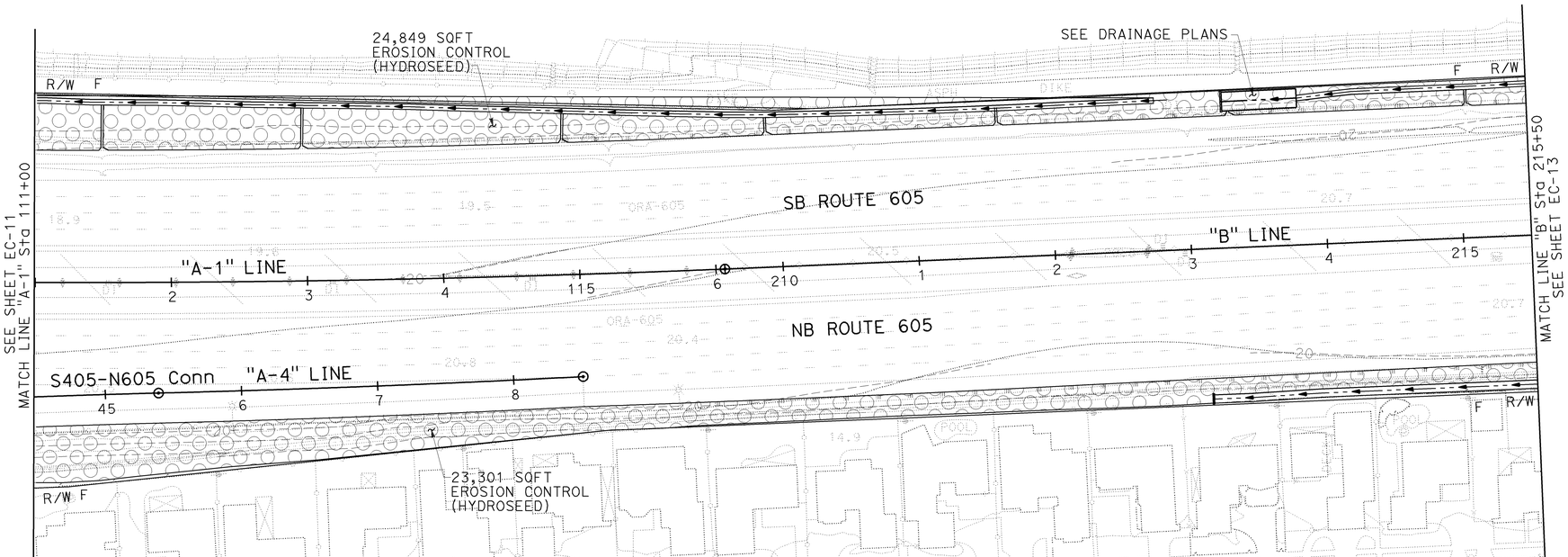

THIS PLAN ACCURATE FOR EROSION CONTROL WORK ONLY.

EROSION CONTROL PLAN

SCALE: 1" = 50'

EC-12

CALCULATED-DESIGNED BY	KELSIE ANDERSON	REVISED BY	KLA
CHECKED BY	JULIET SU	DATE REVISED	8/10/09

CONSULTANT FUNCTIONAL SUPERVISOR: LEONARD SEQUEIRA

STATE OF CALIFORNIA - DEPARTMENT OF TRANSPORTATION

Caltrans

LAST REVISION: DATE PLOTTED => 03-FEB-2010
08-10-09 TIME PLOTTED => 08:22

BORDER LAST REVISED 8/1/2008

RELATIVE BORDER SCALE IS IN INCHES 0 1 2 3

USERNAME => trmnguye
DGN FILE => c07163ge012.dgn

CU 12235

EA 071631

NOTE:

1. FOR COMPLETE RIGHT OF WAY AND ACCURATE ACCESS DATA, SEE RIGHT OF WAY RECORD MAPS AT DISTRICT OFFICE.

Dist	COUNTY	ROUTE	POST MILES TOTAL PROJECT	SHEET No.	TOTAL SHEETS
12	Ora	22,405, 605	R0.3/R0.9, 22.3/24.0,3.0/R1.6	308	1929

REGISTERED CIVIL ENGINEER — 8/10/09 DATE

2-1-10
PLANS APPROVAL DATE

REGISTERED PROFESSIONAL ENGINEER
JULIET SU
No. C56168
Exp.12/31/10
CIVIL
STATE OF CALIFORNIA

THE STATE OF CALIFORNIA OR ITS OFFICERS OR AGENTS SHALL NOT BE RESPONSIBLE FOR THE ACCURACY OR COMPLETENESS OF ELECTRONIC COPIES OF THIS PLAN SHEET.

MTS
16795 VON KARMAN AVE
SUITE 205
IRVINE, CA 92606

ORANGE COUNTY
TRANSPORTATION AUTHORITY
550 S. MAIN STREET
ORANGE, CA 92863-1584

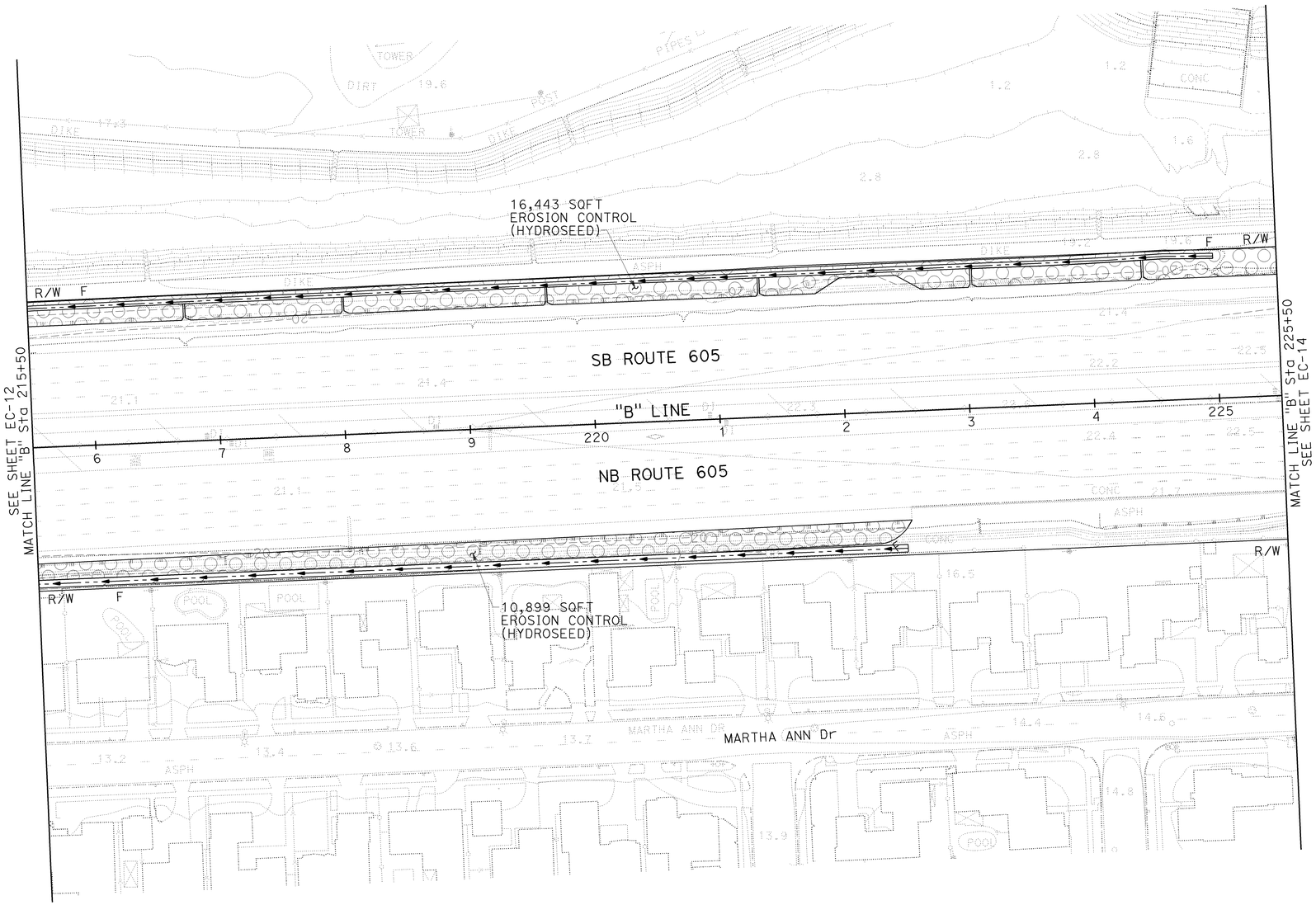

EROSION CONTROL PLAN

SCALE: 1" = 50'

EC-13

THIS PLAN ACCURATE FOR EROSION CONTROL WORK ONLY.

REVISED BY	DATE REVISED
KLA	8/10/09

CALCULATED-DESIGNED BY: KELSIE ANDERSON
CHECKED BY: JULIET SU

CONSULTANT FUNCTIONAL SUPERVISOR: LEONARD SEQUEIRA

STATE OF CALIFORNIA - DEPARTMENT OF TRANSPORTATION
Caltrans

LAST REVISION: DATE PLOTTED => 03-FEB-2010
08-10-09 TIME PLOTTED => 08:22

BORDER LAST REVISED 8/1/2008 | RELATIVE BORDER SCALE IS IN INCHES 0 1 2 3 | USERNAME => trmnguye | DGN FILE => c07163ge013.dgn | CU 12235 | EA 071631

NOTE:

1. FOR COMPLETE RIGHT OF WAY AND ACCURATE ACCESS DATA, SEE RIGHT OF WAY RECORD MAPS AT DISTRICT OFFICE.

Dist	COUNTY	ROUTE	POST MILES TOTAL PROJECT	SHEET No.	TOTAL SHEETS
12	Ora	22,405, 605	R0.3/R0.9, 22.3/24.0,3.0/R1.6	309	1929

REGISTERED CIVIL ENGINEER — 8/10/09 DATE

2-1-10
PLANS APPROVAL DATE

REGISTERED PROFESSIONAL ENGINEER
JULIET SU
No. C56168
Exp.12/31/10
CIVIL
STATE OF CALIFORNIA

THE STATE OF CALIFORNIA OR ITS OFFICERS OR AGENTS SHALL NOT BE RESPONSIBLE FOR THE ACCURACY OR COMPLETENESS OF ELECTRONIC COPIES OF THIS PLAN SHEET.

MTS
16795 VON KARMAN AVE
SUITE 205
IRVINE, CA 92606

ORANGE COUNTY
TRANSPORTATION AUTHORITY
550 S. MAIN STREET
ORANGE, CA 92863-1584

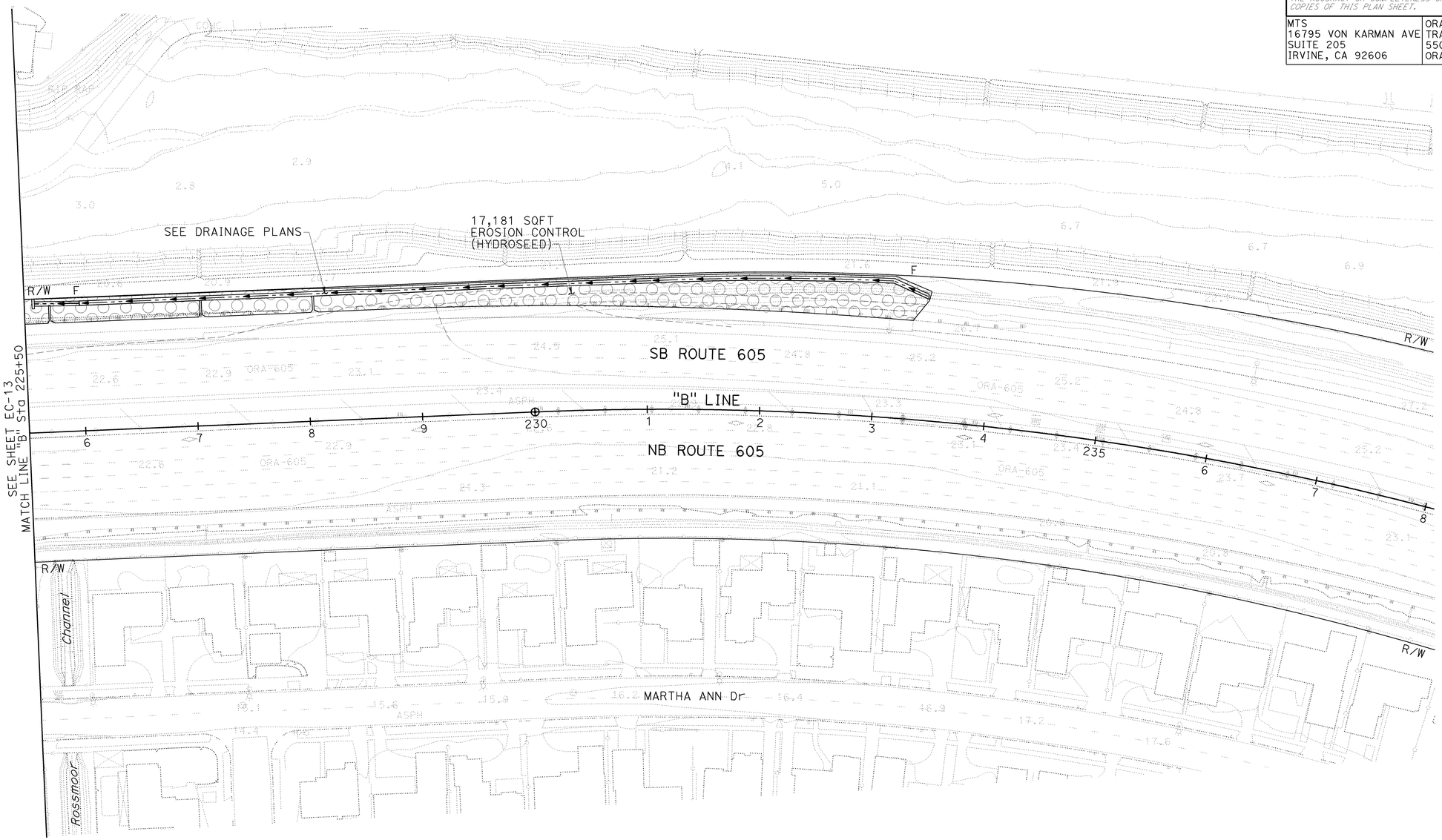

EROSION CONTROL PLAN

SCALE: 1" = 50'

EC-14

THIS PLAN ACCURATE FOR EROSION CONTROL WORK ONLY.

REVISED BY	DATE REVISED
KLA	8/10/09

CALCULATED-DESIGNED BY: KELSIE ANDERSON
CHECKED BY: JULIET SU
CONSULTANT FUNCTIONAL SUPERVISOR: LEONARD SEQUEIRA

STATE OF CALIFORNIA - DEPARTMENT OF TRANSPORTATION
Caltrans

LAST REVISION DATE PLOTTED => 03-FEB-2010
TIME PLOTTED => 08:22
08-10-09

BORDER LAST REVISED 8/1/2008

RELATIVE BORDER SCALE IS IN INCHES 0 1 2 3

USERNAME => trmnguye
DGN FILE => c07163ge014.dgn

CU 12235

EA 071631

Dist	COUNTY	ROUTE	POST MILES TOTAL PROJECT	SHEET No.	TOTAL SHEETS
12	Ora	22,405, 605	R0.3/R0.9, 22.3/24.0,3.0/R1.6	310	1929

REGISTERED CIVIL ENGINEER — 8/10/09 DATE

2-1-10
PLANS APPROVAL DATE

REGISTERED PROFESSIONAL ENGINEER
JULIET SU
No. C56168
Exp.12/31/10
CIVIL
STATE OF CALIFORNIA

THE STATE OF CALIFORNIA OR ITS OFFICERS OR AGENTS SHALL NOT BE RESPONSIBLE FOR THE ACCURACY OR COMPLETENESS OF ELECTRONIC COPIES OF THIS PLAN SHEET.

MTS
16795 VON KARMAN AVE
SUITE 205
IRVINE, CA 92606

ORANGE COUNTY
TRANSPORTATION AUTHORITY
550 S. MAIN STREET
ORANGE, CA 92863-1584

NOTE:

1. FOR COMPLETE RIGHT OF WAY AND ACCURATE ACCESS DATA, SEE RIGHT OF WAY RECORD MAPS AT DISTRICT OFFICE.

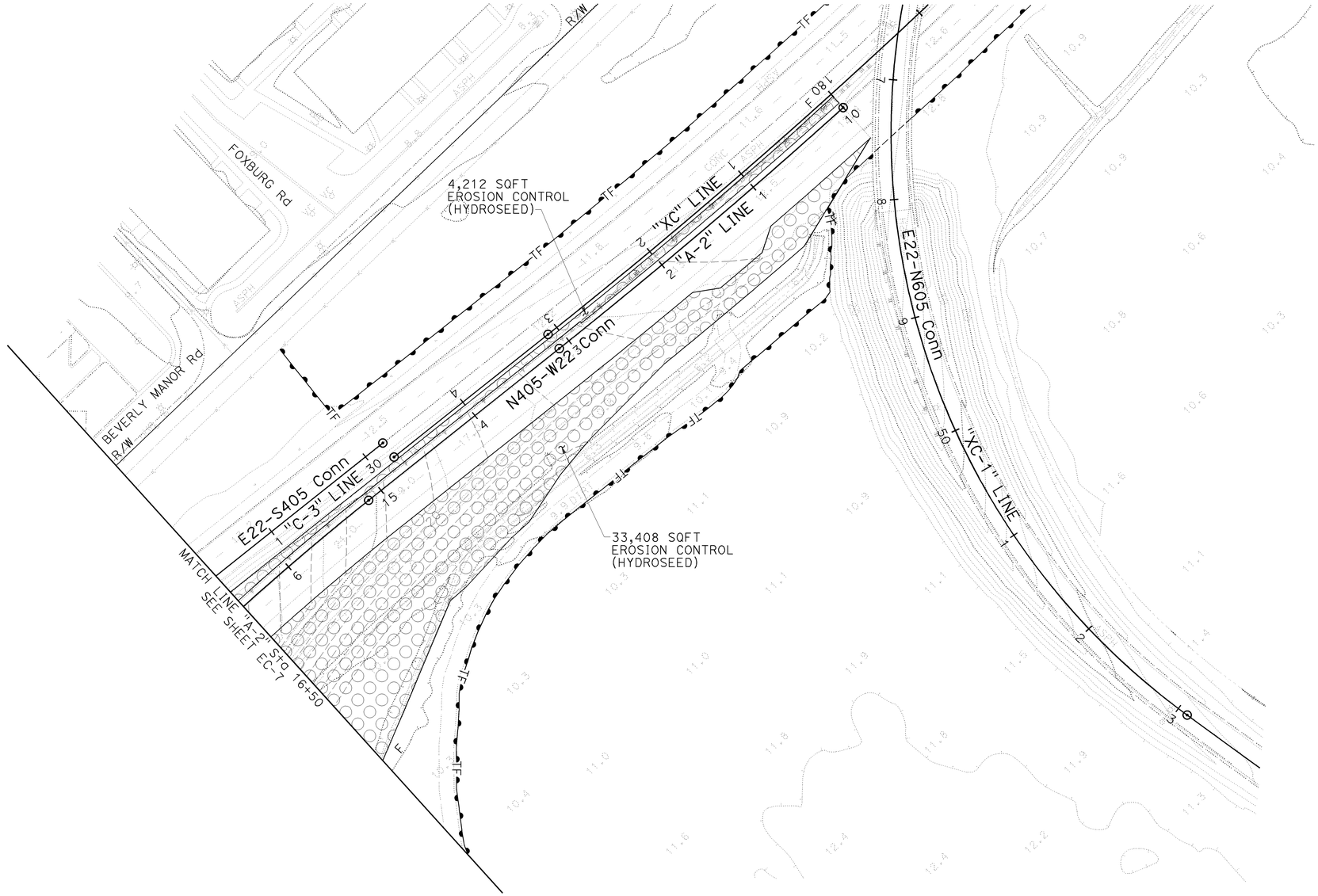

EROSION CONTROL PLAN

SCALE: 1" = 50'

EC-15

THIS PLAN ACCURATE FOR EROSION CONTROL WORK ONLY.

STATE OF CALIFORNIA - DEPARTMENT OF TRANSPORTATION	CONSULTANT FUNCTIONAL SUPERVISOR: LEONARD SEQUEIRA	CALCULATED-DESIGNED BY: KELSIE ANDERSON	REVISED BY: KLA
Caltrans	CHECKED BY: JULIET SU		DATE REVISED: 8/10/09

LAST REVISION DATE PLOTTED => 03-FEB-2010
LAST REVISION TIME PLOTTED => 08:22
08-10-09

BORDER LAST REVISED 8/1/2008 | RELATIVE BORDER SCALE IS IN INCHES 0 1 2 3 | USERNAME => trmnguye | DGN FILE => c07163ge015.dgn | CU 12235 | EA 071631

NOTE:

1. FOR COMPLETE RIGHT OF WAY AND ACCURATE ACCESS DATA, SEE RIGHT OF WAY RECORD MAPS AT DISTRICT OFFICE.

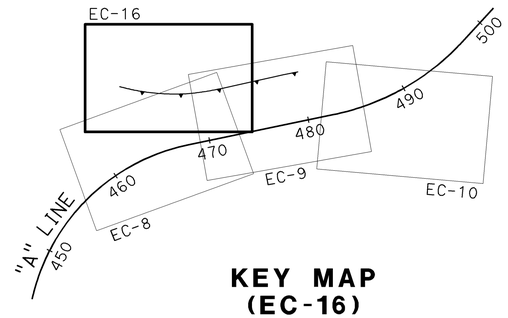

KEY MAP
(EC-16)

Dist	COUNTY	ROUTE	POST MILES TOTAL PROJECT	SHEET No.	TOTAL SHEETS
12	Ora	22,405, 605	R0.3/R0.9, 22.3/24.0,3.0/R1.6	311	1929

REGISTERED CIVIL ENGINEER — 8/10/09 DATE

2-1-10
PLANS APPROVAL DATE

REGISTERED PROFESSIONAL ENGINEER
JULIET SU
No. C56168
Exp.12/31/10
CIVIL
STATE OF CALIFORNIA

THE STATE OF CALIFORNIA OR ITS OFFICERS OR AGENTS SHALL NOT BE RESPONSIBLE FOR THE ACCURACY OR COMPLETENESS OF ELECTRONIC COPIES OF THIS PLAN SHEET.

MTS
16795 VON KARMAN AVE
SUITE 205
IRVINE, CA 92606

ORANGE COUNTY
TRANSPORTATION AUTHORITY
550 S. MAIN STREET
ORANGE, CA 92863-1584

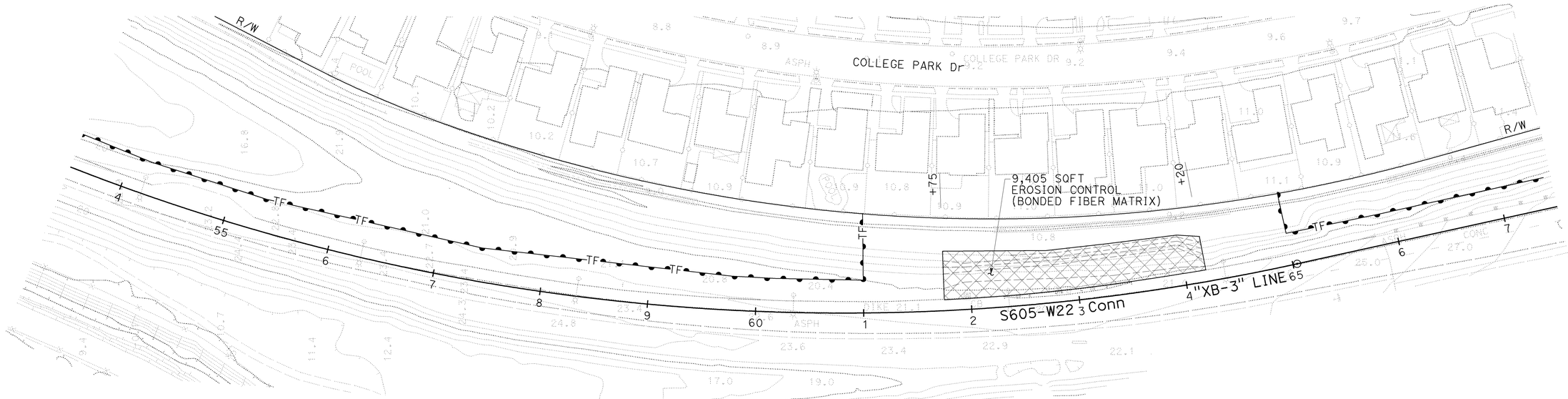

EROSION CONTROL PLAN

SCALE: 1" = 50'

EC-16

THIS PLAN ACCURATE FOR EROSION CONTROL WORK ONLY.

CALCULATED-DESIGNED BY
CHECKED BY

KELSIE ANDERSON
JULIET SU

REVISED BY
DATE REVISED

KLA
8/10/09

CONSULTANT FUNCTIONAL SUPERVISOR
LEONARD SEQUEIRA

STATE OF CALIFORNIA - DEPARTMENT OF TRANSPORTATION
Caltrans

LAST REVISION DATE PLOTTED => 03-FEB-2010
TIME PLOTTED => 08:23
08-10-09

BORDER LAST REVISED 8/1/2008

RELATIVE BORDER SCALE IS IN INCHES 0 1 2 3

USERNAME => trmnguye
DGN FILE => c07163ge016.dgn

CU 12235

EA 071631

Dist	COUNTY	ROUTE	POST MILES TOTAL PROJECT	SHEET No.	TOTAL SHEETS
12	Ora	22,405, 605	R0.3/R0.9, 22.3/24.0,3.0/R1.6	312	1929

REGISTERED CIVIL ENGINEER — 12/22/09 DATE

2-1-10
PLANS APPROVAL DATE

REGISTERED PROFESSIONAL ENGINEER
JULIET SU
No. C56168
Exp.12/31/10
CIVIL
STATE OF CALIFORNIA

THE STATE OF CALIFORNIA OR ITS OFFICERS OR AGENTS SHALL NOT BE RESPONSIBLE FOR THE ACCURACY OR COMPLETENESS OF ELECTRONIC COPIES OF THIS PLAN SHEET.

MTS
16795 VON KARMAN AVE
SUITE 205
IRVINE, CA 92606

ORANGE COUNTY
TRANSPORTATION AUTHORITY
550 S. MAIN STREET
ORANGE, CA 92863-1584

EROSION CONTROL QUANTITIES

SHEET	STATION LIMITS	DIRECTION	EROSION CONTROL (HYDROSEED)	EROSION CONTROL (BONDED FIBER MATRIX)
			SQFT	SQFT
EC-1	"A" 395+50 TO "A" 398+50	NB	2,475	
	"A" 395+50 TO "A" 398+50	SB	6,804	
EC-2	"A" 398+50 TO "A" 408+50	NB	32,634	
	"A" 398+50 TO "A" 408+50	SB	19,944	
EC-3	"A" 408+50 TO "A" 417+50	NB	96,219	
	"A" 408+50 TO "A" 417+50	SB	26,181	
	"SB" 48+50 TO "SB" 62+50	L†	117	11,493
	"SB-1" 48+50 TO "SB-1" 52+50	R†	5,112	
	"SB-2" 49+40 TO "SB-2" 57+50	L†	16,119	
	"SB-3" 28+20 TO "SB-3" 37+20	L†	72,297	
EC-4	"A" 417+50 TO "A" 425+50	NB	16,776	
	"A" 417+50 TO "A" 425+50	SB	7,065	4,248
EC-5	"A" 425+50 TO "A" 438+50	NB	9,819	
	"A" 425+50 TO "A" 438+50	SB	18,198	
	"OR" 4+92 TO "OR" 18+00	L†	12,645	
EC-6	"A" 438+50 TO "A" 451+50	NB	112,298	
	"A" 438+50 TO "A" 451+50	SB	64,431	
EC-7	"A" 451+50 TO "A" 458+50	NB	28,079	
	"A" 451+50 TO "A" 458+50	SB	121,455	
	"C-3" 31+50 TO "C-3" 36+50	L†	24,822	
	"C-3" 33+45 TO "C-3" 36+50	R†	4,761	
EC-8	"A" 458+50 TO "A" 471+50	NB	37,224	
	"A" 458+50 TO "A" 471+50	SB	100,566	6,372
EC-9	"A" 471+50 TO "A" 483+50	NB	70,884	
	"A" 471+50 TO "A" 483+50	SB	30,528	
	"C-1" 8+25 TO "C-1" 17+70	L†	33,012	29,142
	"C-1" 8+25 TO "C-1" 17+70	R†		43,308
EC-10	"A-1" 84+25 TO "A-1" 97+50	L†	351	
	"C-1" 17+70 TO "C-1" 30+80	L†	10,890	2,943
	"A-3" 54+50 TO "A-3" 65+00	R†	531	4,068
	"C-2" 7+65 TO "C-2" 21+00	L†	21,438	18,675
	"C-2" 7+65 TO "C-2" 21+00	R†	2,790	73,323
EC-11	"A-3" 65+00 TO "A-3" 74+40	L†	11,196	
	"A-4" 31+00 TO "A-4" 44+50	L†	39,384	
	"A-4" 31+00 TO "A-4" 44+50	R†	15,273	
	"B-1" 11+50 TO "A-1" 111+50	L†	747	4,671
	"B-1" 11+50 TO "A-1" 111+50	R†	20,340	
EC-12	"A-1" 111+00 TO "B" 215+50	NB	23,301	
	"A-1" 111+00 TO "B" 215+50	SB	24,849	
EC-13	"B" 215+50 TO "B" 225+50	NB	10,899	
	"B" 215+50 TO "B" 225+50	SB	16,443	
EC-14	"B" 225+50 TO "B" 238+00	SB	17,181	
EC-15	"A-2" 10+00 TO "A-2" 16+50	L†	33,408	
	"A-2" 10+00 TO "A-2" 16+50	R†	4,212	
EC-16	"XB-3" 61+75 TO "XB-3" 64+20	L†		9,405
EC-17	"SB" 40+70 TO "SB" 48+50	L†	3,771	8,307
	"SB" 40+70 TO "SB" 48+50	R†	8,919	
		TOTAL	1,236,388	215,955

NOTE:

1. FOR COMPLETE RIGHT OF WAY AND ACCURATE ACCESS DATA, SEE RIGHT OF WAY RECORD MAPS AT DISTRICT OFFICE.

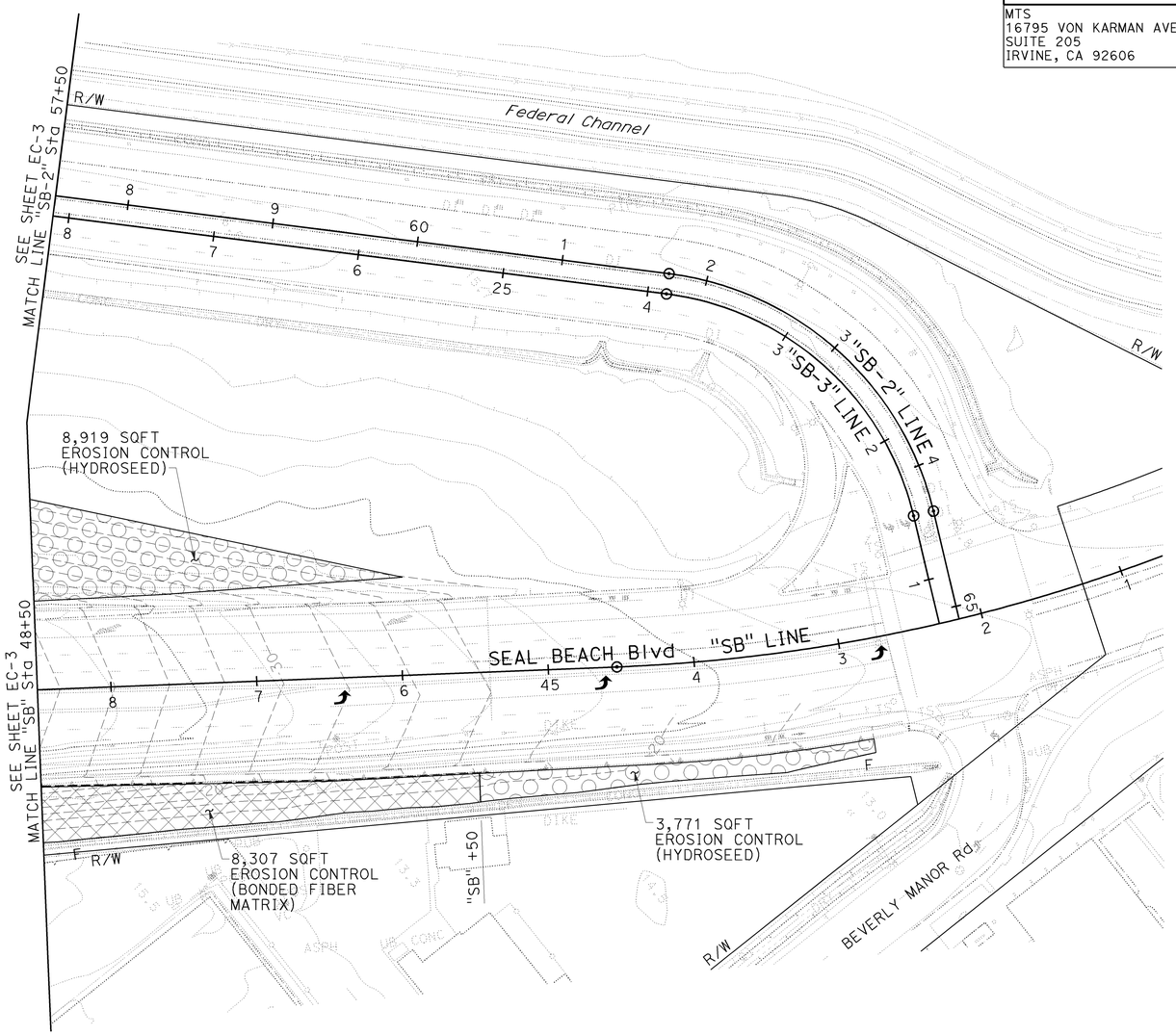

EROSION CONTROL QUANTITIES

MOVE-IN/MOVE-OUT (EROSION CONTROL)
EA
9

THIS PLAN ACCURATE FOR EROSION CONTROL WORK ONLY.

EROSION CONTROL PLAN

SCALE: 1" = 50'

EC-17

CALCULATED-DESIGNED BY: KELSIE ANDERSON
CHECKED BY: JULIET SU
CONSULTANT FUNCTIONAL SUPERVISOR: LEONARD SEQUEIRA
STATE OF CALIFORNIA - DEPARTMENT OF TRANSPORTATION
Caltrans

REVISED BY	DATE REVISED
KLA	12/22/09

LAST REVISION: DATE PLOTTED => 03-FEB-2010
08-10-09 TIME PLOTTED => 08:23

BORDER LAST REVISED 8/1/2008

RELATIVE BORDER SCALE IS IN INCHES 0 1 2 3

USERNAME => trmnguye
DGN FILE => c07163ge017.dgn

CU 12235

EA 071631

Dist	COUNTY	ROUTE	POST MILES TOTAL PROJECT	SHEET No.	TOTAL SHEETS
12	Ora	22,405, 605	R0.3/R0.9, 22.3/24.0,3.0/R1.6	313	1929

David Lew 8/10/09
REGISTERED CIVIL ENGINEER DATE

2-1-10
PLANS APPROVAL DATE

REGISTERED PROFESSIONAL ENGINEER
DAVID LEW
No. C59063
Exp. 6/30/11
CIVIL
STATE OF CALIFORNIA

THE STATE OF CALIFORNIA OR ITS OFFICERS OR AGENTS SHALL NOT BE RESPONSIBLE FOR THE ACCURACY OR COMPLETENESS OF ELECTRONIC COPIES OF THIS PLAN SHEET.

TRC
21 TECHNOLOGY Dr
IRVINE, CA 92618

ORANGE COUNTY
TRANSPORTATION AUTHORITY
550 S. MAIN STREET
ORANGE, CA 92863-1584

NOTES:

1. FOR COMPLETE RIGHT OF WAY AND ACCURATE ACCESS DATA, SEE RIGHT OF WAY RECORD MAPS AT DISTRICT OFFICE.
2. FOR CONCRETE CHANNEL AND BIOSWALE DETAILS, SEE DRAINAGE PLANS.

LEGEND

DITCH

ARCHEOLOGICAL MONITORING AREA (AMA)

ABBREVIATION:

DS	DRAINAGE SYSTEM
C	CUT
F	FILL
C|F	CUT / FILL LIMITS

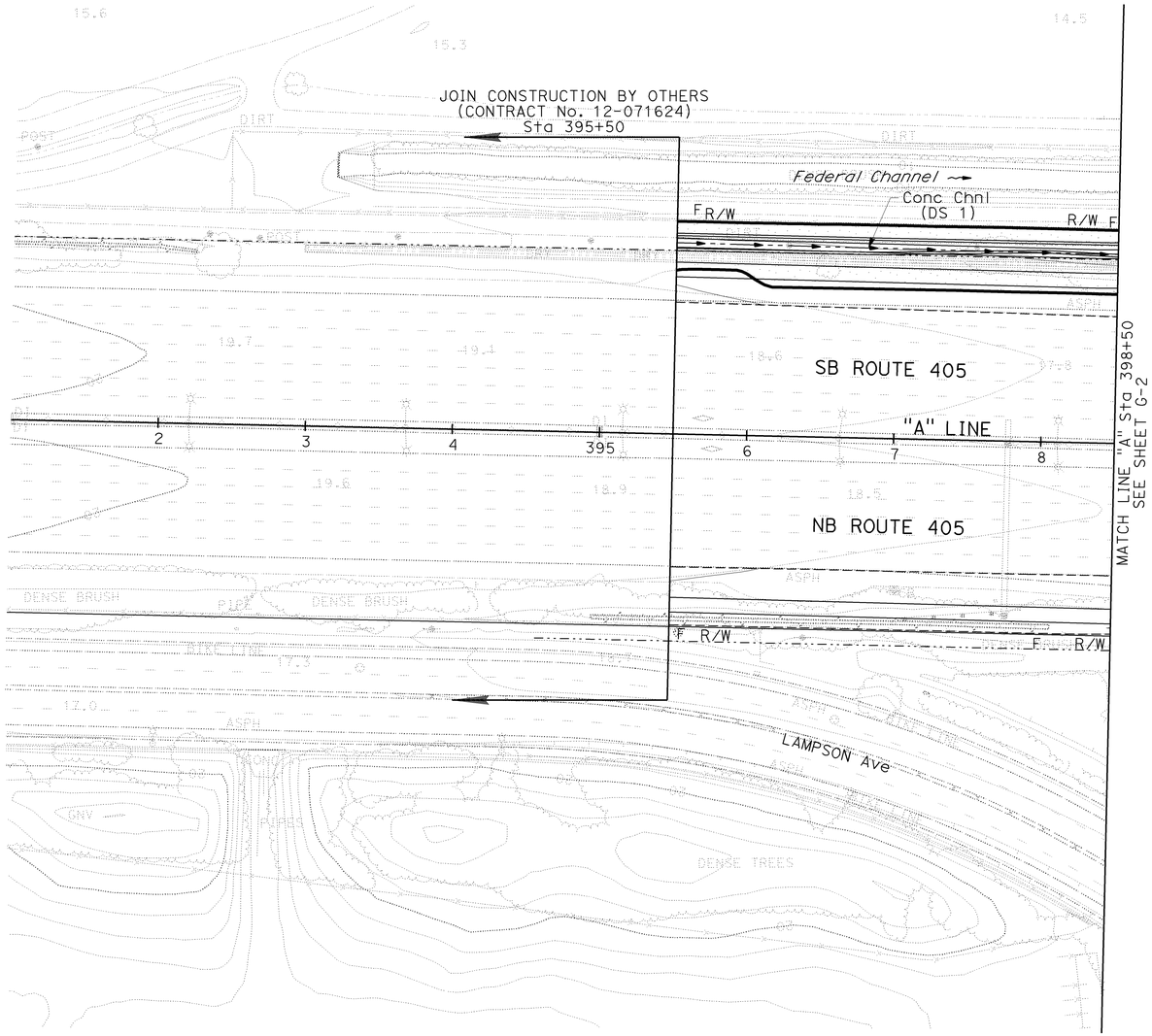

CONTOUR GRADING

SCALE: 1" = 50'

G-1

THIS PLAN ACCURATE FOR CONTOUR GRADING WORK ONLY.

STATE OF CALIFORNIA - DEPARTMENT OF TRANSPORTATION
Caltrans

CONSULTANT FUNCTIONAL SUPERVISOR: ROSS LEW
CALCULATED-DESIGNED BY: ERIC JOHNSON
CHECKED BY: DAVID LEW
REVISED BY: DBL
DATE REVISED: 8/10/09

LAST REVISION 08-10-09
DATE PLOTTED => 03-FEB-2010
TIME PLOTTED => 10:14

Dist	COUNTY	ROUTE	POST MILES TOTAL PROJECT	SHEET No.	TOTAL SHEETS
12	Ora	22,405, 605	R0.3/R0.9, 22.3/24.0,3.0/R1.6	314	1929

David Lew 8/10/09
REGISTERED CIVIL ENGINEER DATE

2-1-10
PLANS APPROVAL DATE

REGISTERED PROFESSIONAL ENGINEER
DAVID LEW
No. C59063
Exp. 6/30/11
CIVIL
STATE OF CALIFORNIA

THE STATE OF CALIFORNIA OR ITS OFFICERS OR AGENTS SHALL NOT BE RESPONSIBLE FOR THE ACCURACY OR COMPLETENESS OF ELECTRONIC COPIES OF THIS PLAN SHEET.

TRC
21 TECHNOLOGY Dr
IRVINE, CA 92618

ORANGE COUNTY
TRANSPORTATION AUTHORITY
550 S. MAIN STREET
ORANGE, CA 92863-1584

NOTE:

1. FOR COMPLETE RIGHT OF WAY AND ACCURATE ACCESS DATA, SEE RIGHT OF WAY RECORD MAPS AT DISTRICT OFFICE.

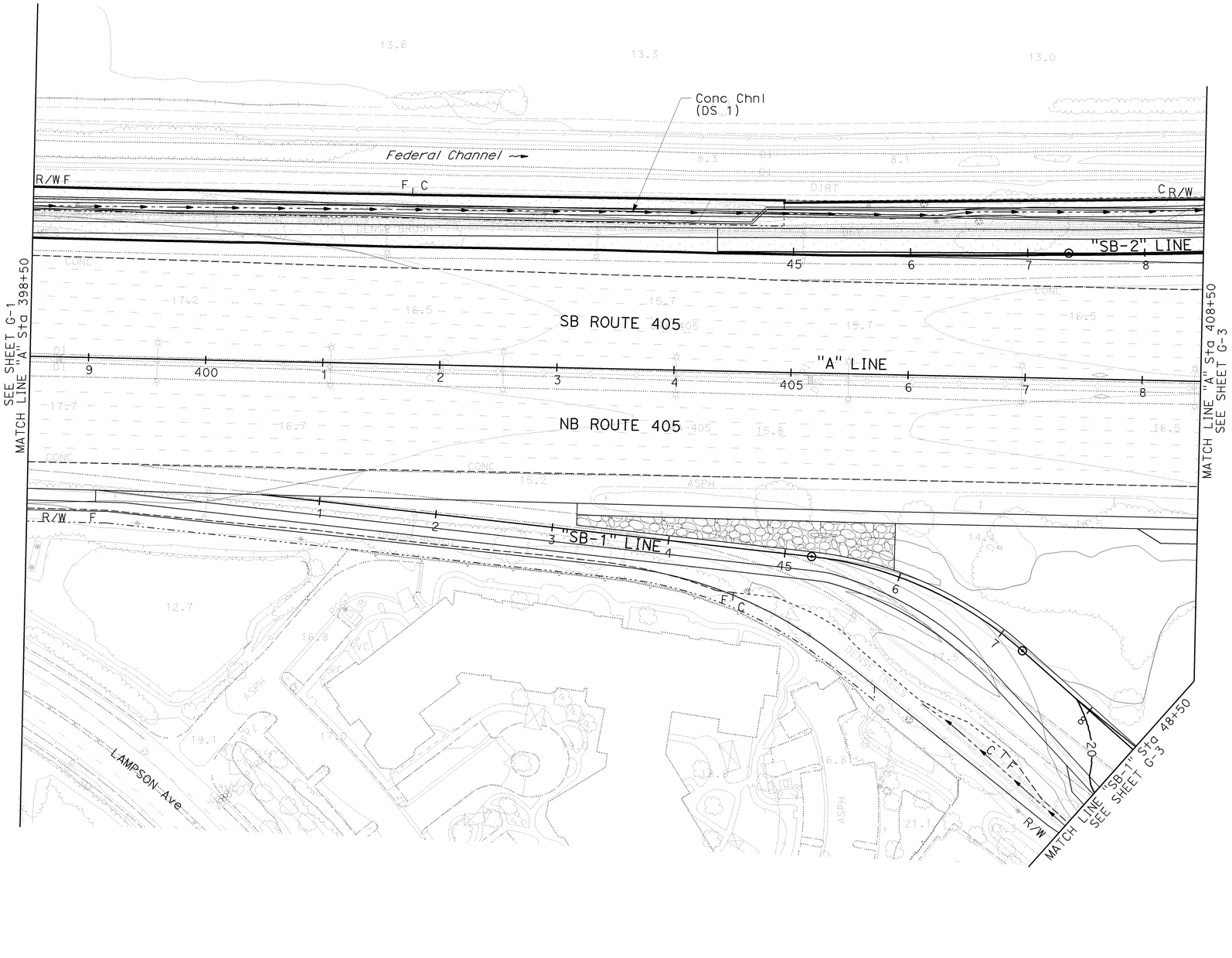

CONTOUR GRADING

SCALE: 1" = 50'

G-2

THIS PLAN ACCURATE FOR CONTOUR GRADING WORK ONLY.

STATE OF CALIFORNIA - DEPARTMENT OF TRANSPORTATION
Caltrans

CONSULTANT FUNCTIONAL SUPERVISOR: ROSS LEW

REVISED BY	DATE REVISED
DBL	8/10/09

CALCULATED-DESIGNED BY: ERIC JOHNSON
CHECKED BY: DAVID LEW

LAST REVISION DATE PLOTTED => 03-FEB-2010
LAST REVISION TIME PLOTTED => 10:14
08-10-09

BORDER LAST REVISED 8/1/2008

RELATIVE BORDER SCALE IS IN INCHES 0 1 2 3

USERNAME => trmariak
DGN FILE => c07163ha002.dgn

CU 12235

EA 071631

Dist	COUNTY	ROUTE	POST MILES TOTAL PROJECT	SHEET No.	TOTAL SHEETS
12	Ora	22,405, 605	R0.3/R0.9, 22.3/24.0,3.0/R1.6	315	1929

David Lew — REGISTERED CIVIL ENGINEER — 8/10/09 DATE

2-1-10 PLANS APPROVAL DATE

REGISTERED PROFESSIONAL ENGINEER — DAVID LEW No. C59063 Exp. 6/30/11 CIVIL — STATE OF CALIFORNIA

THE STATE OF CALIFORNIA OR ITS OFFICERS OR AGENTS SHALL NOT BE RESPONSIBLE FOR THE ACCURACY OR COMPLETENESS OF ELECTRONIC COPIES OF THIS PLAN SHEET.

TRC
21 TECHNOLOGY Dr
IRVINE, CA 92618

ORANGE COUNTY
TRANSPORTATION AUTHORITY
550 S. MAIN STREET
ORANGE, CA 92863-1584

NOTE:

1. FOR COMPLETE RIGHT OF WAY AND ACCURATE ACCESS DATA, SEE RIGHT OF WAY RECORD MAPS AT DISTRICT OFFICE.

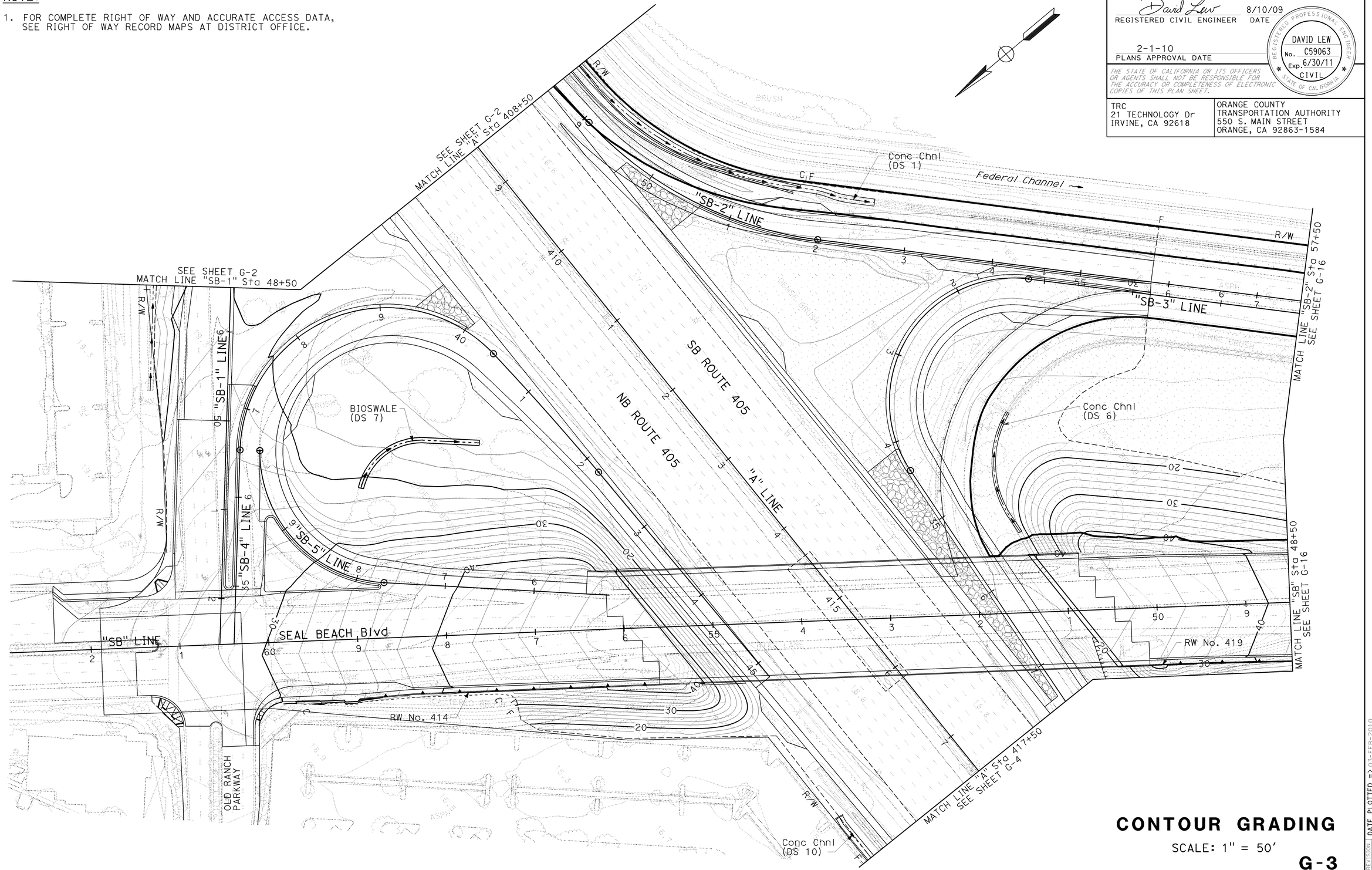

CONTOUR GRADING

SCALE: 1" = 50'

G-3

THIS PLAN ACCURATE FOR CONTOUR GRADING WORK ONLY.

REVISED BY	DBL		
DATE REVISED	8/10/09		
ERIC JOHNSON			
DAVID LEW			
CALCULATED-DESIGNED BY			
CHECKED BY			
CONSULTANT FUNCTIONAL SUPERVISOR	ROSS LEW		

STATE OF CALIFORNIA - DEPARTMENT OF TRANSPORTATION

Caltrans

LAST REVISION | DATE PLOTTED => 03-FEB-2010
08-10-09 | TIME PLOTTED => 10:14

BORDER LAST REVISED 8/1/2008 | RELATIVE BORDER SCALE IS IN INCHES 0 1 2 3 | USERNAME => trmariak | DGN FILE => c07163ha003.dgn | CU 12235 | EA 071631

Dist	COUNTY	ROUTE	POST MILES TOTAL PROJECT	SHEET No.	TOTAL SHEETS
12	Ora	22,405, 605	R0.3/R0.9, 22.3/24.0,3.0/R1.6	316	1929

David Lew 8/10/09
REGISTERED CIVIL ENGINEER DATE

2-1-10
PLANS APPROVAL DATE

REGISTERED PROFESSIONAL ENGINEER
DAVID LEW
No. C59063
Exp. 6/30/11
CIVIL
STATE OF CALIFORNIA

THE STATE OF CALIFORNIA OR ITS OFFICERS OR AGENTS SHALL NOT BE RESPONSIBLE FOR THE ACCURACY OR COMPLETENESS OF ELECTRONIC COPIES OF THIS PLAN SHEET.

TRC
21 TECHNOLOGY Dr
IRVINE, CA 92618

ORANGE COUNTY
TRANSPORTATION AUTHORITY
550 S. MAIN STREET
ORANGE, CA 92863-1584

NOTE:

1. FOR COMPLETE RIGHT OF WAY AND ACCURATE ACCESS DATA, SEE RIGHT OF WAY RECORD MAPS AT DISTRICT OFFICE.

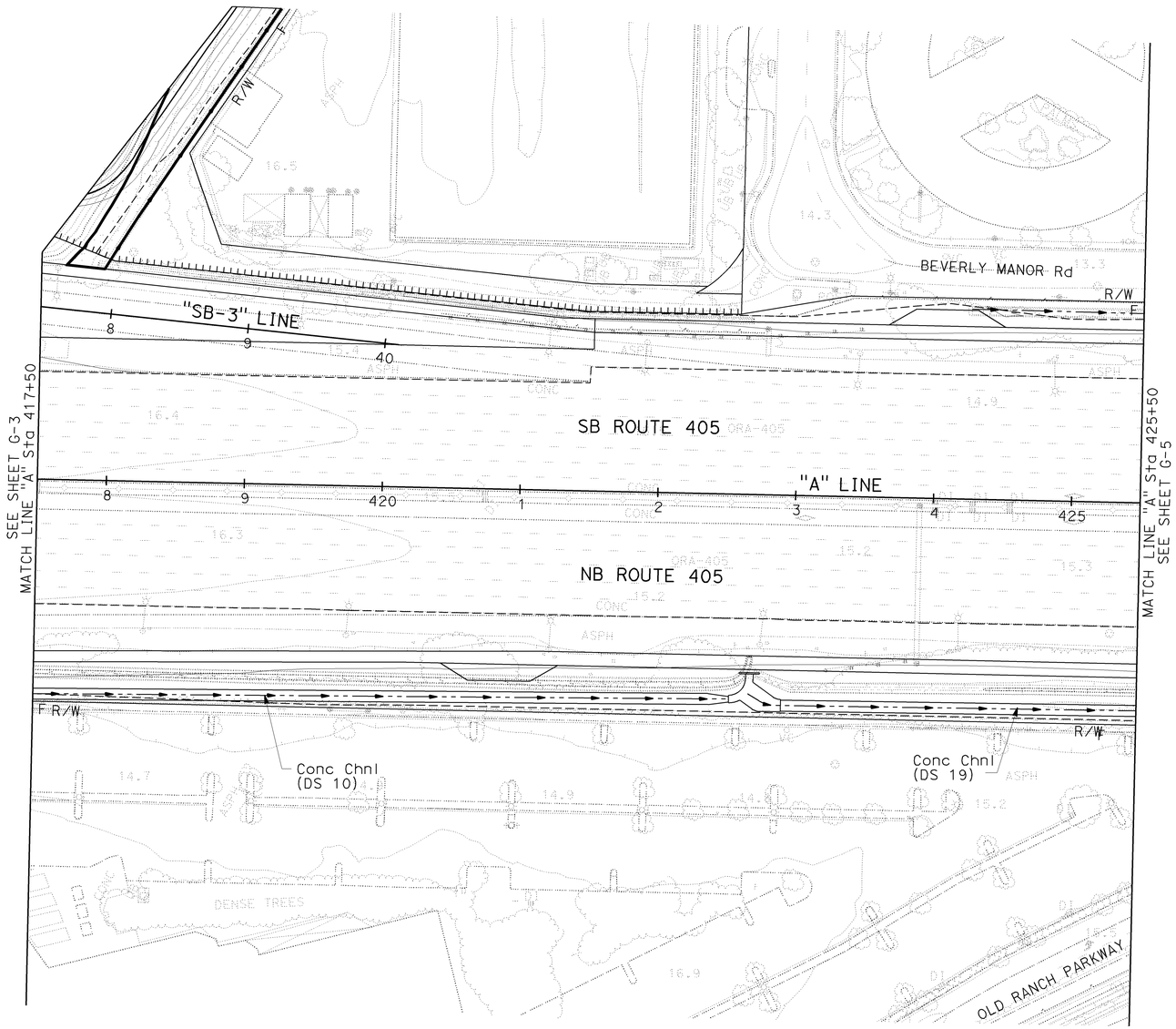

CONTOUR GRADING

SCALE: 1" = 50'

G-4

THIS PLAN ACCURATE FOR CONTOUR GRADING WORK ONLY.

STATE OF CALIFORNIA - DEPARTMENT OF TRANSPORTATION
Caltrans

CONSULTANT FUNCTIONAL SUPERVISOR: ROSS LEW
CALCULATED-DESIGNED BY: ERIC JOHNSON
CHECKED BY: DAVID LEW
REVISED BY: DBL
DATE REVISED: 8/10/09

LAST REVISION 08-10-09
DATE PLOTTED => 03-FEB-2010
TIME PLOTTED => 10:14

NOTE:

1. FOR COMPLETE RIGHT OF WAY AND ACCURATE ACCESS DATA, SEE RIGHT OF WAY RECORD MAPS AT DISTRICT OFFICE.

Dist	COUNTY	ROUTE	POST MILES TOTAL PROJECT	SHEET No.	TOTAL SHEETS
12	Ora	22,405, 605	R0.3/R0.9, 22.3/24.0,3.0/R1.6	317	1929

David Lew 8/10/09
REGISTERED CIVIL ENGINEER DATE

2-1-10
PLANS APPROVAL DATE

REGISTERED PROFESSIONAL ENGINEER
DAVID LEW
No. C59063
Exp. 6/30/11
CIVIL
STATE OF CALIFORNIA

THE STATE OF CALIFORNIA OR ITS OFFICERS OR AGENTS SHALL NOT BE RESPONSIBLE FOR THE ACCURACY OR COMPLETENESS OF ELECTRONIC COPIES OF THIS PLAN SHEET.

TRC
21 TECHNOLOGY Dr
IRVINE, CA 92618

ORANGE COUNTY
TRANSPORTATION AUTHORITY
550 S. MAIN STREET
ORANGE, CA 92863-1584

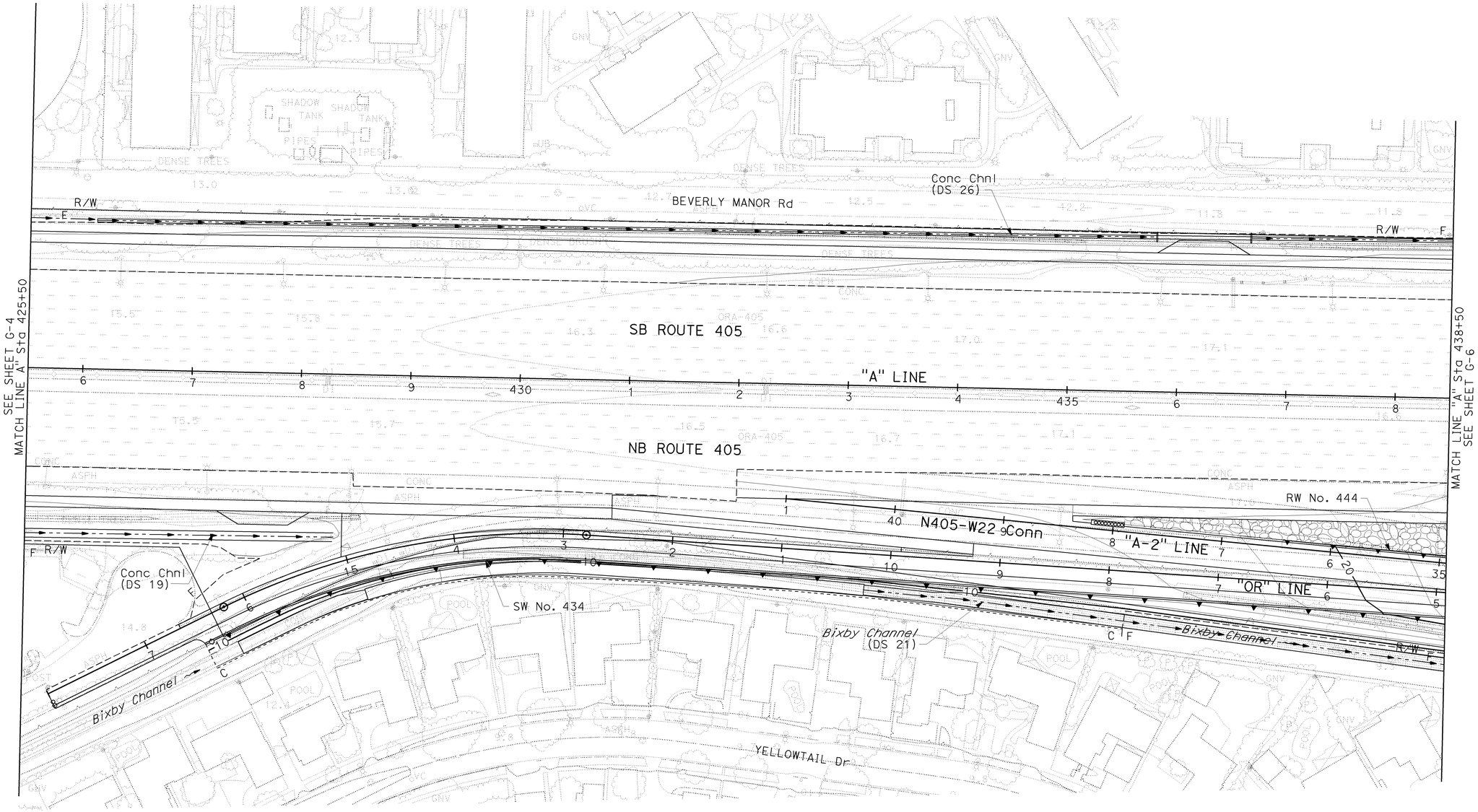

CONTOUR GRADING

SCALE: 1" = 50'

G-5

THIS PLAN ACCURATE FOR CONTOUR GRADING WORK ONLY.

STATE OF CALIFORNIA - DEPARTMENT OF TRANSPORTATION
Caltrans

CONSULTANT FUNCTIONAL SUPERVISOR: ROSS LEW
CALCULATED-DESIGNED BY:
CHECKED BY:
REVISED BY: DBL
DATE REVISED: 8/10/09
ERIC JOHNSON
DAVID LEW

LAST REVISION
DATE PLOTTED => 03-FEB-2010
TIME PLOTTED => 10:14
08-10-09

BORDER LAST REVISED 8/1/2008
RELATIVE BORDER SCALE IS IN INCHES 0 1 2 3
USERNAME => trmariak
DGN FILE => c07163ha005.dgn
CU 12235
EA 071631

Dist	COUNTY	ROUTE	POST MILES TOTAL PROJECT	SHEET No.	TOTAL SHEETS
12	Ora	22,405, 605	R0.3/R0.9, 22.3/24.0,3.0/R1.6	318	1929

David Lew 8/10/09
REGISTERED CIVIL ENGINEER DATE

2-1-10
PLANS APPROVAL DATE

REGISTERED PROFESSIONAL ENGINEER
DAVID LEW
No. C59063
Exp. 6/30/11
CIVIL
STATE OF CALIFORNIA

THE STATE OF CALIFORNIA OR ITS OFFICERS OR AGENTS SHALL NOT BE RESPONSIBLE FOR THE ACCURACY OR COMPLETENESS OF ELECTRONIC COPIES OF THIS PLAN SHEET.

TRC
21 TECHNOLOGY Dr
IRVINE, CA 92618

ORANGE COUNTY
TRANSPORTATION AUTHORITY
550 S. MAIN STREET
ORANGE, CA 92863-1584

NOTE:

1. FOR COMPLETE RIGHT OF WAY AND ACCURATE ACCESS DATA, SEE RIGHT OF WAY RECORD MAPS AT DISTRICT OFFICE.

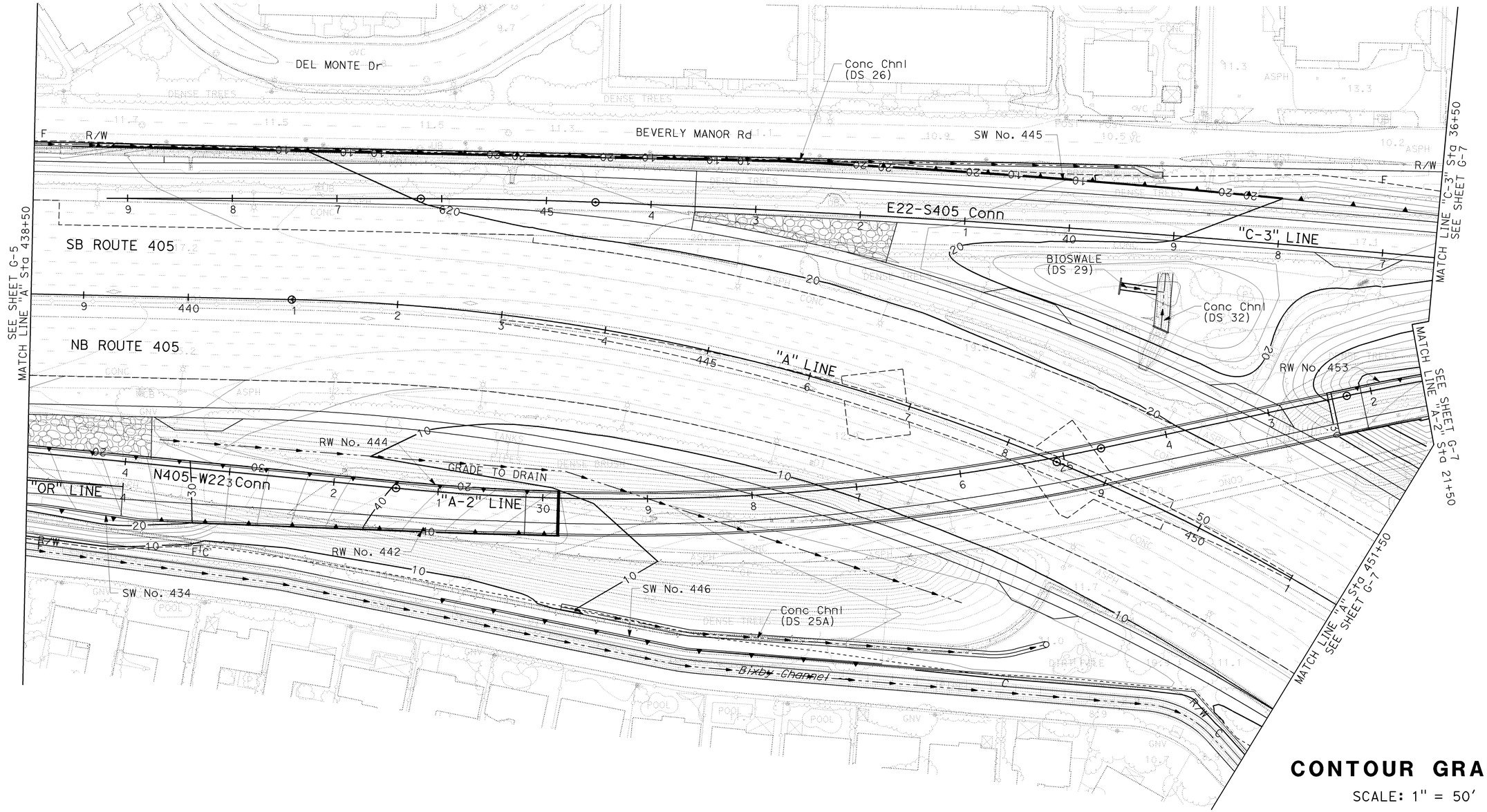

CONTOUR GRADING

SCALE: 1" = 50'

G-6

THIS PLAN ACCURATE FOR CONTOUR GRADING WORK ONLY.

REVISED BY	DBL		
DATE REVISED	8/10/09		
CALCULATED-DESIGNED BY	ERIC JOHNSON		
CHECKED BY	DAVID LEW		
CONSULTANT FUNCTIONAL SUPERVISOR	ROSS LEW		
STATE OF CALIFORNIA - DEPARTMENT OF TRANSPORTATION	Caltrans		

LAST REVISION 08-10-09 | DATE PLOTTED => 03-FEB-2010 | TIME PLOTTED => 10:15

BORDER LAST REVISED 8/1/2008 | RELATIVE BORDER SCALE IS IN INCHES 0 1 2 3 | USERNAME => trmariak | DGN FILE => c07163ha006.dgn | CU 12235 | EA 071631

Dist	COUNTY	ROUTE	POST MILES TOTAL PROJECT	SHEET No.	TOTAL SHEETS
12	Ora	22,405, 605	R0.3/R0.9, 22.3/24.0,3.0/R1.6	319	1929

David Lew 8/10/09
REGISTERED CIVIL ENGINEER DATE

2-1-10
PLANS APPROVAL DATE

REGISTERED PROFESSIONAL ENGINEER
DAVID LEW
No. C59063
Exp. 6/30/11
CIVIL
STATE OF CALIFORNIA

THE STATE OF CALIFORNIA OR ITS OFFICERS OR AGENTS SHALL NOT BE RESPONSIBLE FOR THE ACCURACY OR COMPLETENESS OF ELECTRONIC COPIES OF THIS PLAN SHEET.

TRC
21 TECHNOLOGY Dr
IRVINE, CA 92618

ORANGE COUNTY
TRANSPORTATION AUTHORITY
550 S. MAIN STREET
ORANGE, CA 92863-1584

NOTE:

1. FOR COMPLETE RIGHT OF WAY AND ACCURATE ACCESS DATA, SEE RIGHT OF WAY RECORD MAPS AT DISTRICT OFFICE.

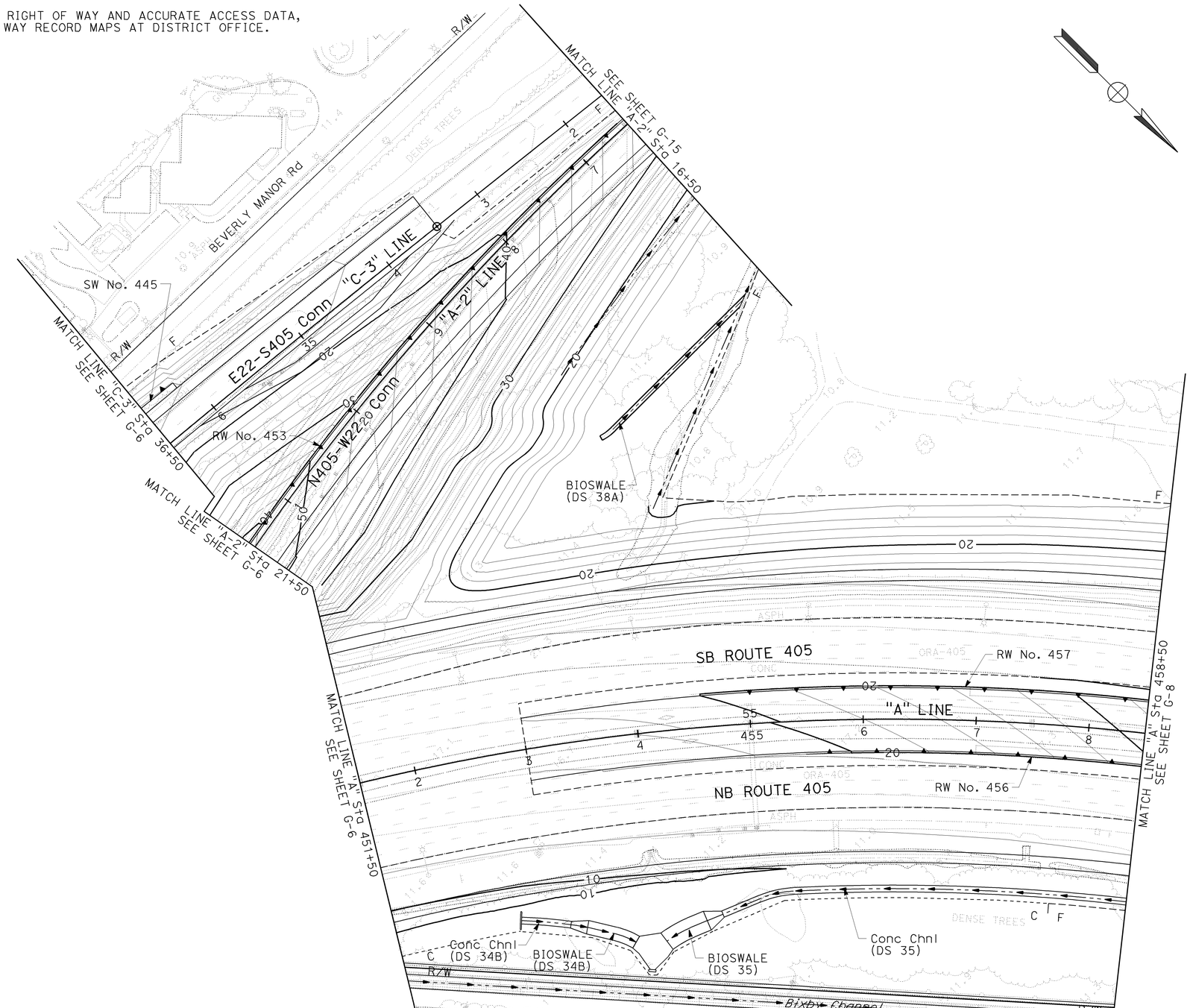

CONTOUR GRADING

SCALE: 1" = 50'

G-7

THIS PLAN ACCURATE FOR CONTOUR GRADING WORK ONLY.

STATE OF CALIFORNIA - DEPARTMENT OF TRANSPORTATION
Caltrans

CALCULATED-DESIGNED BY	CHECKED BY	CONSULTANT FUNCTIONAL SUPERVISOR	REVISED BY	DATE REVISED
ERIC JOHNSON	DAVID LEW	ROSS LEW	DBL	8/10/09

LAST REVISION 08-10-09
DATE PLOTTED => 03-FEB-2010
TIME PLOTTED => 10:15

BORDER LAST REVISED 8/1/2008
RELATIVE BORDER SCALE IS IN INCHES 0 1 2 3
USERNAME => trmariak
DGN FILE => c07163ha007.dgn
CU 12235
EA 071631

Dist	COUNTY	ROUTE	POST MILES TOTAL PROJECT	SHEET No.	TOTAL SHEETS
12	Ora	22,405, 605	R0.3/R0.9, 22.3/24.0,3.0/R1.6	320	1929

David Lew 8/10/09
REGISTERED CIVIL ENGINEER DATE

2-1-10
PLANS APPROVAL DATE

REGISTERED PROFESSIONAL ENGINEER
DAVID LEW
No. C59063
Exp. 6/30/11
CIVIL
STATE OF CALIFORNIA

THE STATE OF CALIFORNIA OR ITS OFFICERS OR AGENTS SHALL NOT BE RESPONSIBLE FOR THE ACCURACY OR COMPLETENESS OF ELECTRONIC COPIES OF THIS PLAN SHEET.

TRC
21 TECHNOLOGY Dr
IRVINE, CA 92618

ORANGE COUNTY
TRANSPORTATION AUTHORITY
550 S. MAIN STREET
ORANGE, CA 92863-1584

NOTE:

1. FOR COMPLETE RIGHT OF WAY AND ACCURATE ACCESS DATA, SEE RIGHT OF WAY RECORD MAPS AT DISTRICT OFFICE.

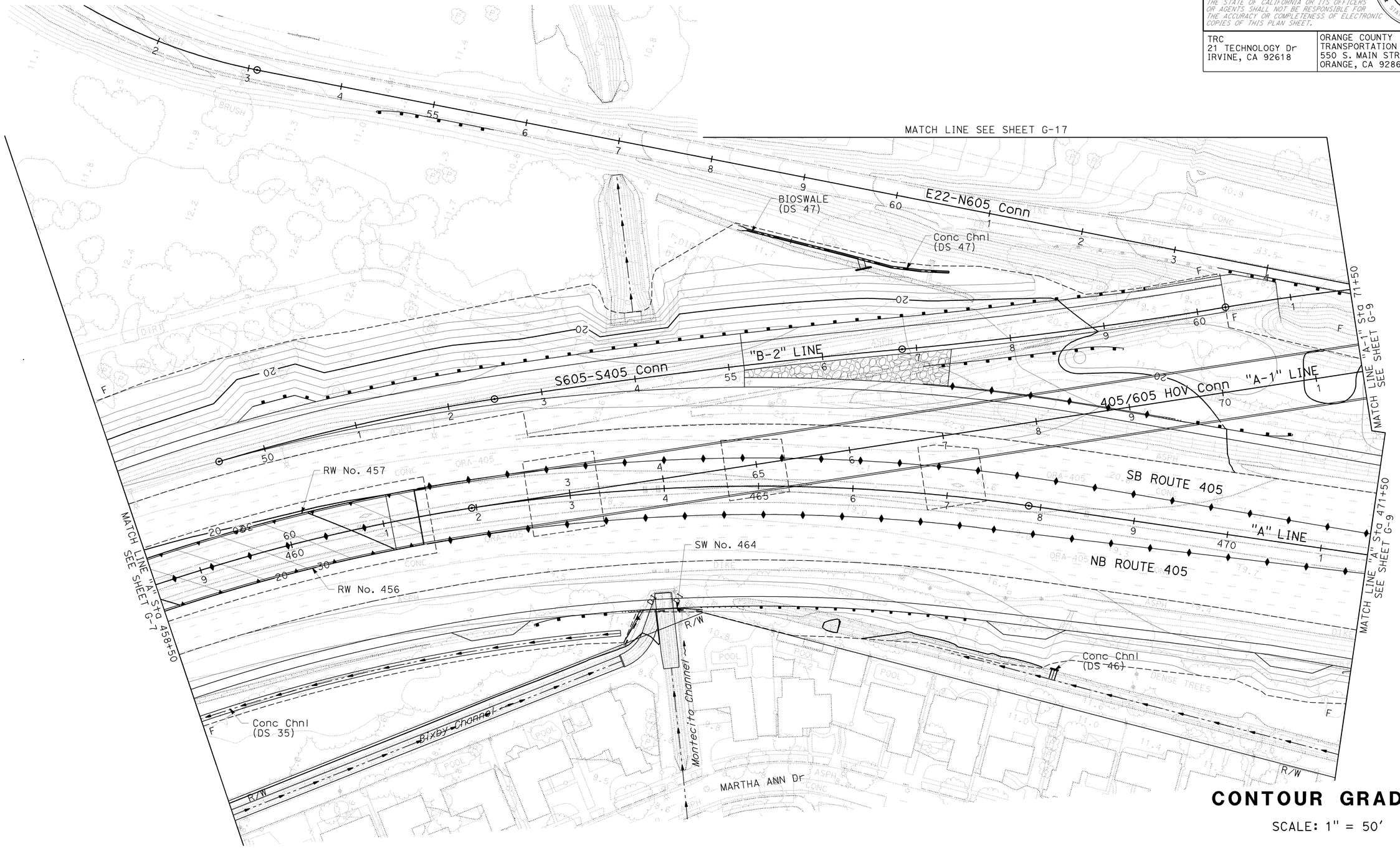

CONTOUR GRADING

SCALE: 1" = 50'

G-8

THIS PLAN ACCURATE FOR CONTOUR GRADING WORK ONLY.

REVISED BY	DBL
DATE REVISED	8/10/09
CALCULATED-DESIGNED BY	ERIC JOHNSON
CHECKED BY	DAVID LEW
CONSULTANT FUNCTIONAL SUPERVISOR	ROSS LEW

STATE OF CALIFORNIA - DEPARTMENT OF TRANSPORTATION
Caltrans

LAST REVISION DATE PLOTTED => 03-FEB-2010
TIME PLOTTED => 10:15
08-10-09

BORDER LAST REVISED 8/1/2008

RELATIVE BORDER SCALE IS IN INCHES 0 1 2 3

USERNAME => trmariak
DGN FILE => c07163ha008.dgn

CU 12235

EA 071631

Dist	COUNTY	ROUTE	POST MILES TOTAL PROJECT	SHEET No.	TOTAL SHEETS
12	Ora	22,405, 605	R0.3/R0.9, 22.3/24.0,3.0/R1.6	321	1929

David Lew 8/10/09
REGISTERED CIVIL ENGINEER DATE

2-1-10
PLANS APPROVAL DATE

REGISTERED PROFESSIONAL ENGINEER
DAVID LEW
No. C59063
Exp. 6/30/11
CIVIL
STATE OF CALIFORNIA

THE STATE OF CALIFORNIA OR ITS OFFICERS OR AGENTS SHALL NOT BE RESPONSIBLE FOR THE ACCURACY OR COMPLETENESS OF ELECTRONIC COPIES OF THIS PLAN SHEET.

TRC
21 TECHNOLOGY Dr
IRVINE, CA 92618

ORANGE COUNTY
TRANSPORTATION AUTHORITY
550 S. MAIN STREET
ORANGE, CA 92863-1584

NOTE:

1. FOR COMPLETE RIGHT OF WAY AND ACCURATE ACCESS DATA, SEE RIGHT OF WAY RECORD MAPS AT DISTRICT OFFICE.

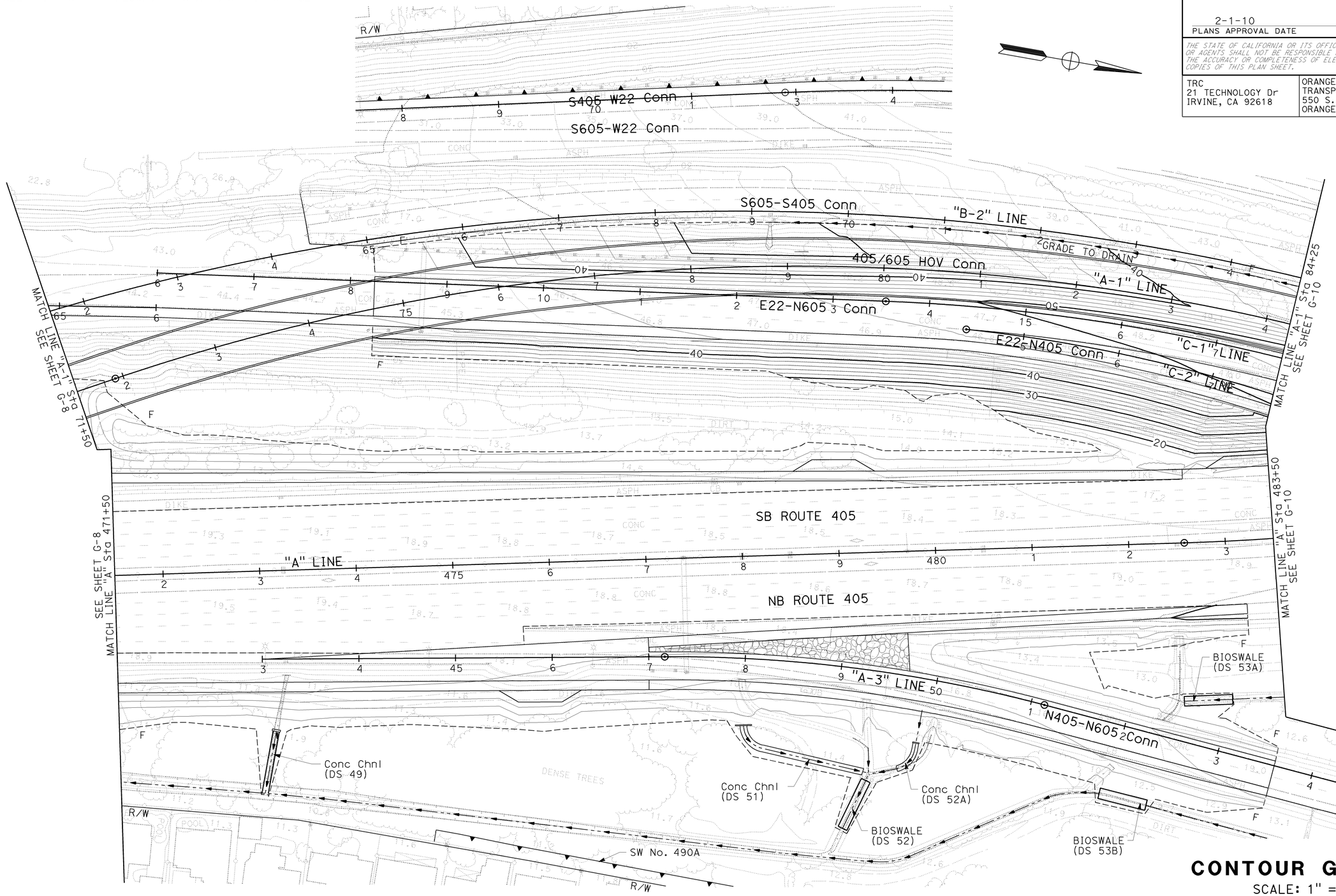

CONTOUR GRADING

SCALE: 1" = 50'

G-9

THIS PLAN ACCURATE FOR CONTOUR GRADING WORK ONLY.

REVISED BY	DBL		
DATE REVISED	8/10/09		
ERIC JOHNSON			
DAVID LEW			
CALCULATED-DESIGNED BY			
CHECKED BY			
CONSULTANT FUNCTIONAL SUPERVISOR	ROSS LEW		
STATE OF CALIFORNIA - DEPARTMENT OF TRANSPORTATION	Caltrans		

LAST REVISION DATE PLOTTED => 03-FEB-2010
TIME PLOTTED => 10:15
08-10-09

BORDER LAST REVISED 8/1/2008 | RELATIVE BORDER SCALE IS IN INCHES 0 1 2 3 | USERNAME => trmariak DGN FILE => c07163hq009.dgn | CU 12235 | EA 071631

NOTE:

1. FOR COMPLETE RIGHT OF WAY AND ACCURATE ACCESS DATA, SEE RIGHT OF WAY RECORD MAPS AT DISTRICT OFFICE.

Dist	COUNTY	ROUTE	POST MILES TOTAL PROJECT	SHEET No.	TOTAL SHEETS
12	Ora	22,405, 605	R0.3/R0.9, 22.3/24.0,3.0/R1.6	322	1929

David Lew 12/22/09
REGISTERED CIVIL ENGINEER DATE

2-1-10
PLANS APPROVAL DATE

REGISTERED PROFESSIONAL ENGINEER
DAVID LEW
No. C59063
Exp. 6/30/11
CIVIL
STATE OF CALIFORNIA

THE STATE OF CALIFORNIA OR ITS OFFICERS OR AGENTS SHALL NOT BE RESPONSIBLE FOR THE ACCURACY OR COMPLETENESS OF ELECTRONIC COPIES OF THIS PLAN SHEET.

TRC
21 TECHNOLOGY Dr
IRVINE, CA 92618

ORANGE COUNTY
TRANSPORTATION AUTHORITY
550 S. MAIN STREET
ORANGE, CA 92863-1584

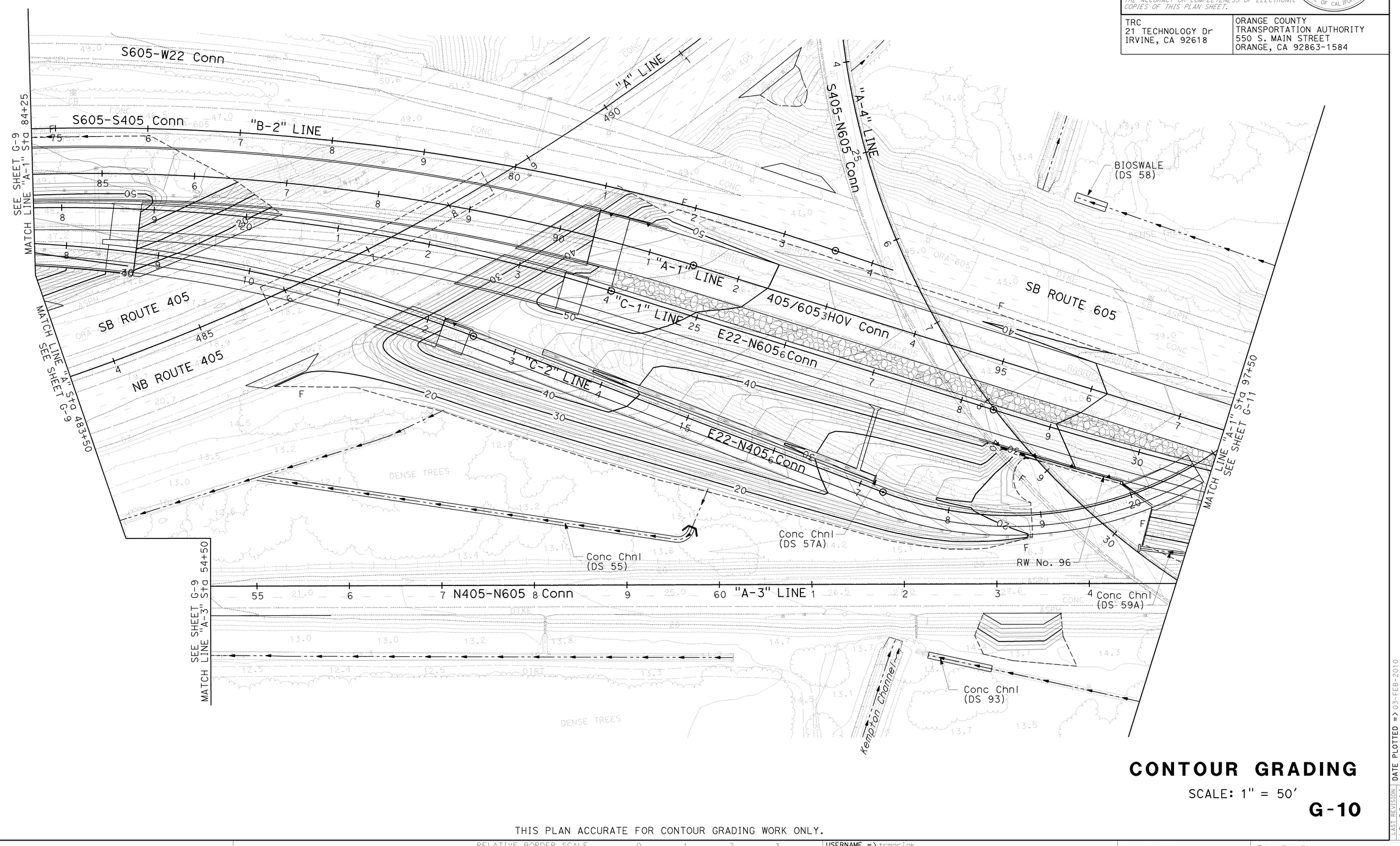

CONTOUR GRADING

SCALE: 1" = 50'

G-10

THIS PLAN ACCURATE FOR CONTOUR GRADING WORK ONLY.

STATE OF CALIFORNIA - DEPARTMENT OF TRANSPORTATION
Caltrans

CONSULTANT FUNCTIONAL SUPERVISOR: ROSS LEW
CALCULATED-DESIGNED BY: ERIC JOHNSON
CHECKED BY: DAVID LEW
REVISED BY: DBL
DATE REVISED: 12/22/09

LAST REVISION: DATE PLOTTED => 03-FEB-2010
12-22-09 TIME PLOTTED => 10:15

BORDER LAST REVISED 8/1/2008
RELATIVE BORDER SCALE IS IN INCHES 0 1 2 3
USERNAME => trmariak
DGN FILE => c07163ha010.dgn
CU 12235
EA 071631

Dist	COUNTY	ROUTE	POST MILES TOTAL PROJECT	SHEET No.	TOTAL SHEETS
12	Ora	22,405, 605	R0.3/R0.9, 22.3/24.0,3.0/R1.6	323	1929

David Lew 8/10/09
REGISTERED CIVIL ENGINEER DATE

2-1-10
PLANS APPROVAL DATE

REGISTERED PROFESSIONAL ENGINEER
DAVID LEW
No. C59063
Exp. 6/30/11
CIVIL
STATE OF CALIFORNIA

THE STATE OF CALIFORNIA OR ITS OFFICERS OR AGENTS SHALL NOT BE RESPONSIBLE FOR THE ACCURACY OR COMPLETENESS OF ELECTRONIC COPIES OF THIS PLAN SHEET.

TRC
21 TECHNOLOGY Dr
IRVINE, CA 92618

ORANGE COUNTY
TRANSPORTATION AUTHORITY
550 S. MAIN STREET
ORANGE, CA 92863-1584

NOTE:

1. FOR COMPLETE RIGHT OF WAY AND ACCURATE ACCESS DATA, SEE RIGHT OF WAY RECORD MAPS AT DISTRICT OFFICE.

CONTOUR GRADING

SCALE: 1" = 50'

G-11

THIS PLAN ACCURATE FOR CONTOUR GRADING WORK ONLY.

STATE OF CALIFORNIA - DEPARTMENT OF TRANSPORTATION
Caltrans

CONSULTANT FUNCTIONAL SUPERVISOR: ROSS LEW
CALCULATED-DESIGNED BY: ERIC JOHNSON
CHECKED BY: DAVID LEW
REVISED BY: DBL
DATE REVISED: 8/10/09

LAST REVISION DATE PLOTTED => 03-FEB-2010
TIME PLOTTED => 10:15
08-10-09

BORDER LAST REVISED 8/1/2008
RELATIVE BORDER SCALE IS IN INCHES 0 1 2 3
USERNAME => trmariak
DGN FILE => c07163ha011.dgn
CU 12235
EA 071631

NOTE:

1. FOR COMPLETE RIGHT OF WAY AND ACCURATE ACCESS TO DATA, SEE RIGHT OF WAY RECORD MAPS AT DISTRICT OFFICE.

Dist	COUNTY	ROUTE	POST MILES TOTAL PROJECT	SHEET No.	TOTAL SHEETS
12	Ora	22,405, 605	R0.3/R0.9, 22.3/24.0,3.0/R1.6	324	1929

David Lew 8/10/09
REGISTERED CIVIL ENGINEER DATE

2-1-10
PLANS APPROVAL DATE

REGISTERED PROFESSIONAL ENGINEER — DAVID LEW No. C59063 Exp. 6/30/11 CIVIL — STATE OF CALIFORNIA

THE STATE OF CALIFORNIA OR ITS OFFICERS OR AGENTS SHALL NOT BE RESPONSIBLE FOR THE ACCURACY OR COMPLETENESS OF ELECTRONIC COPIES OF THIS PLAN SHEET.

TRC
21 TECHNOLOGY Dr
IRVINE, CA 92618

ORANGE COUNTY
TRANSPORTATION AUTHORITY
550 S. MAIN STREET
ORANGE, CA 92863-1584

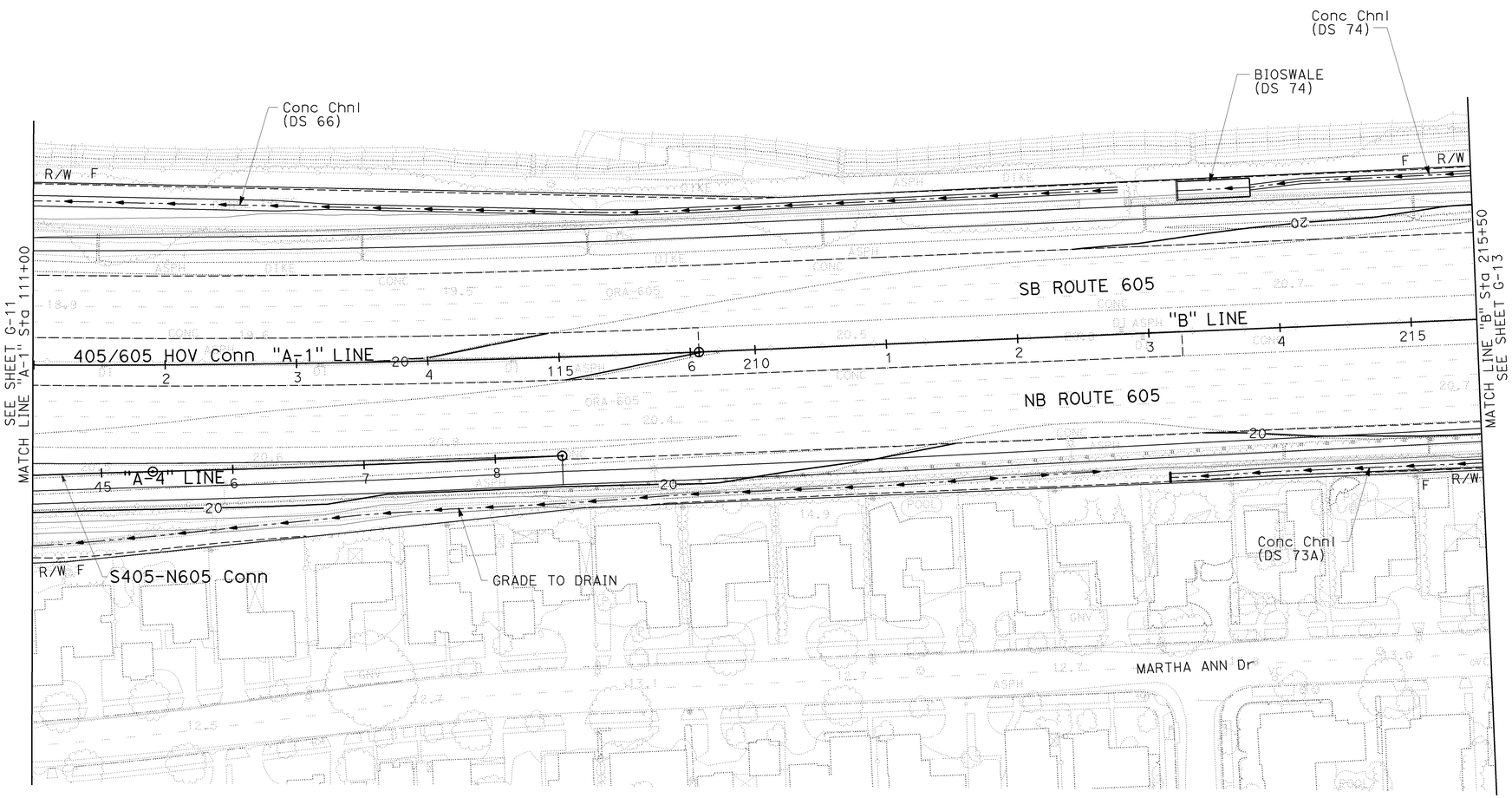

CONTOUR GRADING

SCALE: 1" = 50'

G-12

THIS PLAN ACCURATE FOR CONTOUR GRADING WORK ONLY.

REVISED BY	DBL		
DATE REVISED	8/10/09		
ERIC JOHNSON			
DAVID LEW			
CALCULATED-DESIGNED BY			
CHECKED BY			
CONSULTANT FUNCTIONAL SUPERVISOR			
ROSS LEW			
STATE OF CALIFORNIA - DEPARTMENT OF TRANSPORTATION			
Caltrans			

LAST REVISION 08-10-09 | DATE PLOTTED => 03-FEB-2010 | TIME PLOTTED => 10:16

BORDER LAST REVISED 8/1/2008 | RELATIVE BORDER SCALE IS IN INCHES 0 1 2 3 | USERNAME => trmariak | DGN FILE => c07163ha012.dgn | CU 12235 | EA 071631

Dist	COUNTY	ROUTE	POST MILES TOTAL PROJECT	SHEET No.	TOTAL SHEETS
12	Ora	22,405, 605	R0.3/R0.9, 22.3/24.0,3.0/R1.6	325	1929

David Lew 8/10/09
REGISTERED CIVIL ENGINEER DATE

2-1-10
PLANS APPROVAL DATE

REGISTERED PROFESSIONAL ENGINEER
DAVID LEW
No. C59063
Exp. 6/30/11
CIVIL
STATE OF CALIFORNIA

THE STATE OF CALIFORNIA OR ITS OFFICERS OR AGENTS SHALL NOT BE RESPONSIBLE FOR THE ACCURACY OR COMPLETENESS OF ELECTRONIC COPIES OF THIS PLAN SHEET.

TRC
21 TECHNOLOGY Dr
IRVINE, CA 92618

ORANGE COUNTY
TRANSPORTATION AUTHORITY
550 S. MAIN STREET
ORANGE, CA 92863-1584

NOTE:

1. FOR COMPLETE RIGHT OF WAY AND ACCURATE ACCESS DATA, SEE RIGHT OF WAY RECORD MAPS AT DISTRICT OFFICE.

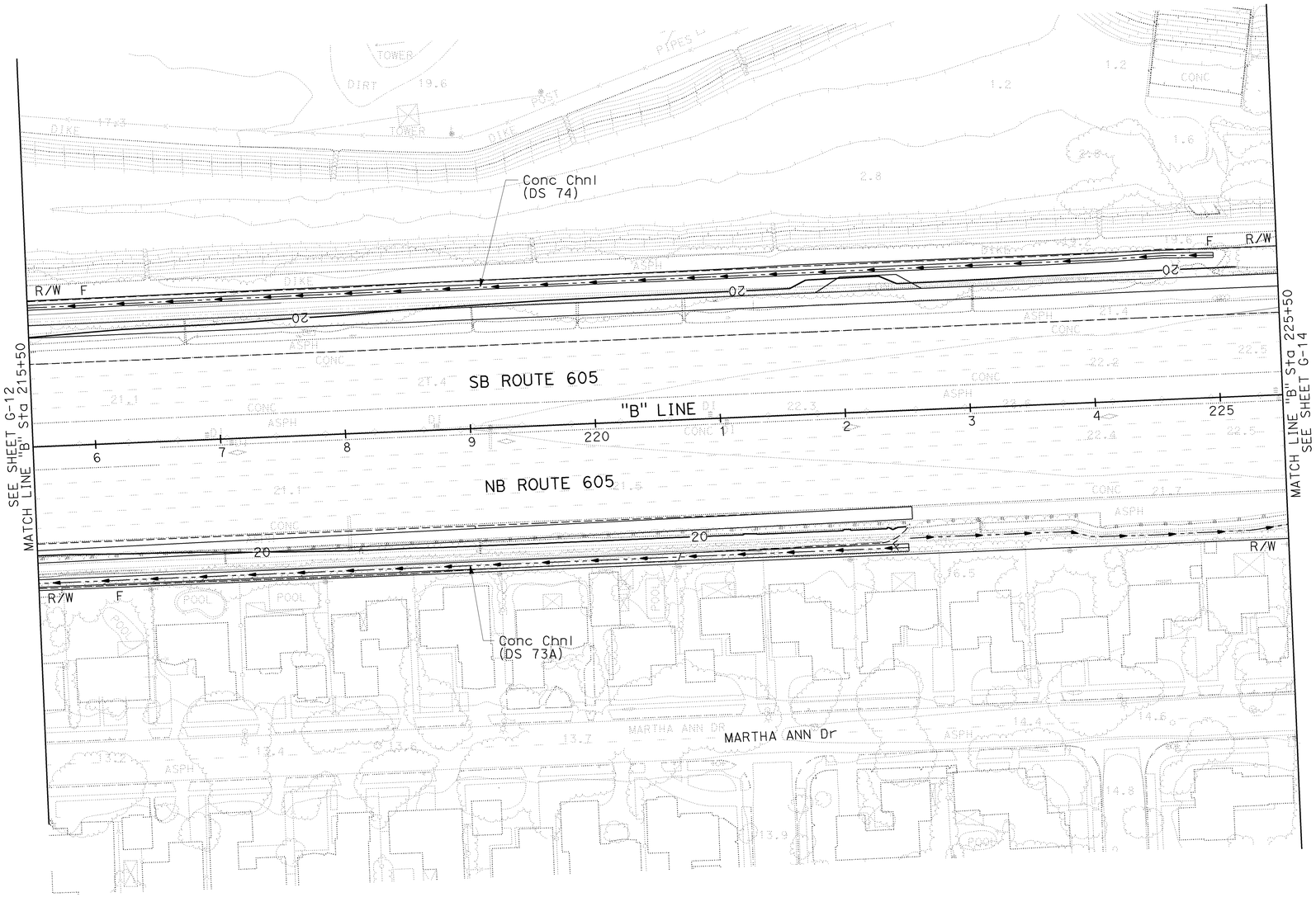

CONTOUR GRADING

SCALE: 1" = 50'

G-13

THIS PLAN ACCURATE FOR CONTOUR GRADING WORK ONLY.

STATE OF CALIFORNIA - DEPARTMENT OF TRANSPORTATION
Caltrans

CONSULTANT FUNCTIONAL SUPERVISOR: ROSS LEW
CALCULATED-DESIGNED BY: ERIC JOHNSON
CHECKED BY: DAVID LEW
REVISED BY: DBL
DATE REVISED: 8/10/09

LAST REVISION 08-10-09 | DATE PLOTTED => 03-FEB-2010 | TIME PLOTTED => 10:16

BORDER LAST REVISED 8/1/2008 | RELATIVE BORDER SCALE IS IN INCHES 0 1 2 3 | USERNAME => trmariak | DGN FILE => c07163ha013.dgn | CU 12235 | EA 071631

Dist	COUNTY	ROUTE	POST MILES TOTAL PROJECT	SHEET No.	TOTAL SHEETS
12	Ora	22,405, 605	R0.3/R0.9, 22.3/24.0,3.0/R1.6	326	1929

David Lew 8/10/09
REGISTERED CIVIL ENGINEER DATE

2-1-10
PLANS APPROVAL DATE

REGISTERED PROFESSIONAL ENGINEER
DAVID LEW
No. C59063
Exp. 6/30/11
CIVIL
STATE OF CALIFORNIA

THE STATE OF CALIFORNIA OR ITS OFFICERS OR AGENTS SHALL NOT BE RESPONSIBLE FOR THE ACCURACY OR COMPLETENESS OF ELECTRONIC COPIES OF THIS PLAN SHEET.

TRC
21 TECHNOLOGY Dr
IRVINE, CA 92618

ORANGE COUNTY
TRANSPORTATION AUTHORITY
550 S. MAIN STREET
ORANGE, CA 92863-1584

NOTE:

1. FOR COMPLETE RIGHT OF WAY AND ACCURATE ACCESS DATA, SEE RIGHT OF WAY RECORD MAPS AT DISTRICT OFFICE.

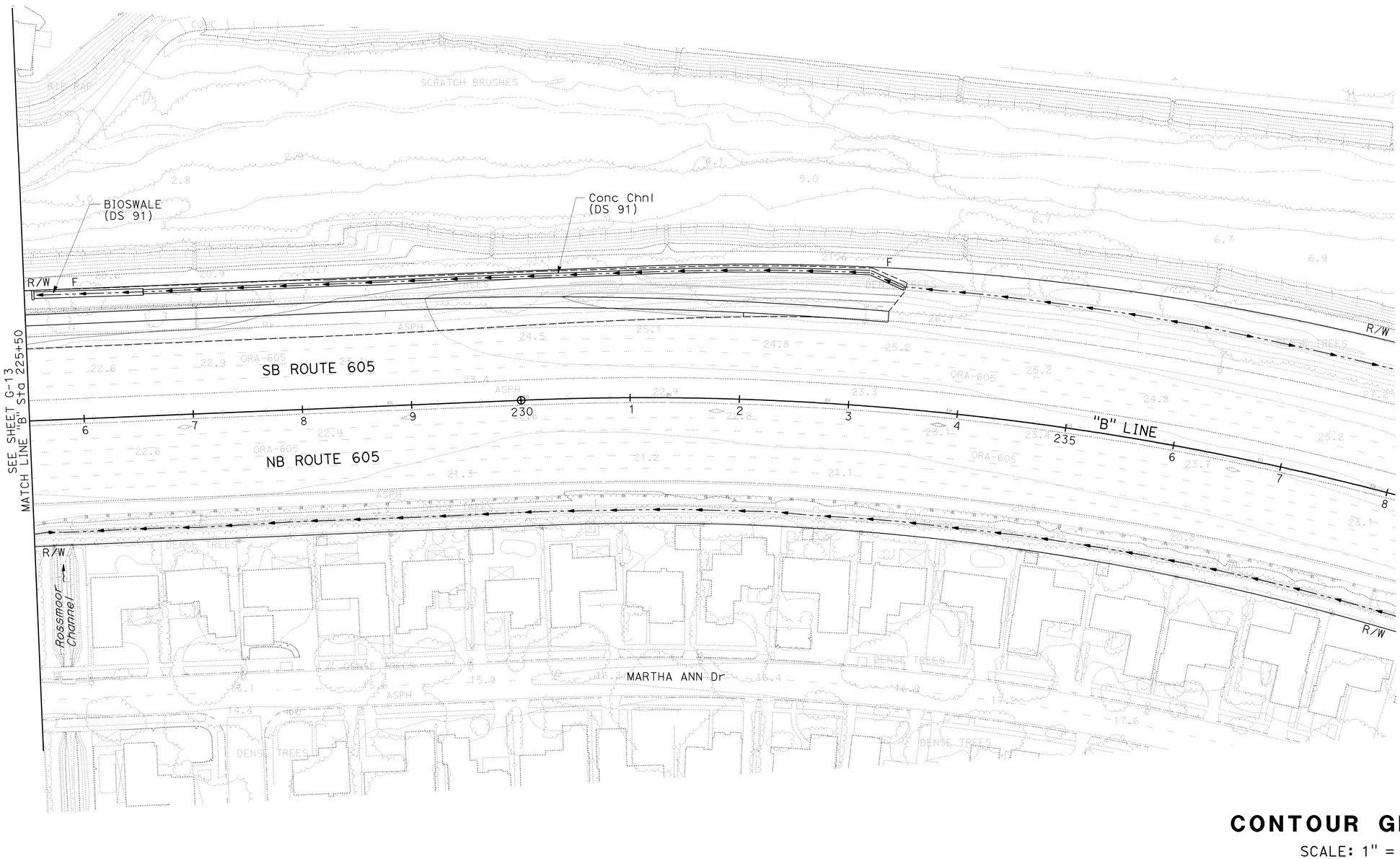

CONTOUR GRADING

SCALE: 1" = 50'

G-14

THIS PLAN ACCURATE FOR CONTOUR GRADING WORK ONLY.

STATE OF CALIFORNIA - DEPARTMENT OF TRANSPORTATION
Caltrans

CONSULTANT FUNCTIONAL SUPERVISOR: ROSS LEW
CALCULATED-DESIGNED BY: ERIC JOHNSON
CHECKED BY: DAVID LEW
REVISED BY: DBL
DATE REVISED: 8/10/09

LAST REVISION: DATE PLOTTED => 03-FEB-2010
08-10-09 TIME PLOTTED => 10:16

BORDER LAST REVISED 8/1/2008
RELATIVE BORDER SCALE IS IN INCHES 0 1 2 3
USERNAME => trmariak
DGN FILE => c07163ha014.dgn
CU 12235
EA 071631

Dist	COUNTY	ROUTE	POST MILES TOTAL PROJECT	SHEET No.	TOTAL SHEETS
12	Ora	22,405, 605	R0.3/R0.9, 22.3/24.0,3.0/R1.6	327	1929

David Lew 8/10/09
REGISTERED CIVIL ENGINEER DATE

2-1-10
PLANS APPROVAL DATE

REGISTERED PROFESSIONAL ENGINEER
DAVID LEW
No. C59063
Exp. 6/30/11
CIVIL
STATE OF CALIFORNIA

THE STATE OF CALIFORNIA OR ITS OFFICERS OR AGENTS SHALL NOT BE RESPONSIBLE FOR THE ACCURACY OR COMPLETENESS OF ELECTRONIC COPIES OF THIS PLAN SHEET.

TRC
21 TECHNOLOGY Dr
IRVINE, CA 92618

ORANGE COUNTY
TRANSPORTATION AUTHORITY
550 S. MAIN STREET
ORANGE, CA 92863-1584

NOTE:

1. FOR COMPLETE RIGHT OF WAY AND ACCURATE ACCESS DATA, SEE RIGHT OF WAY RECORD MAPS AT DISTRICT OFFICE.

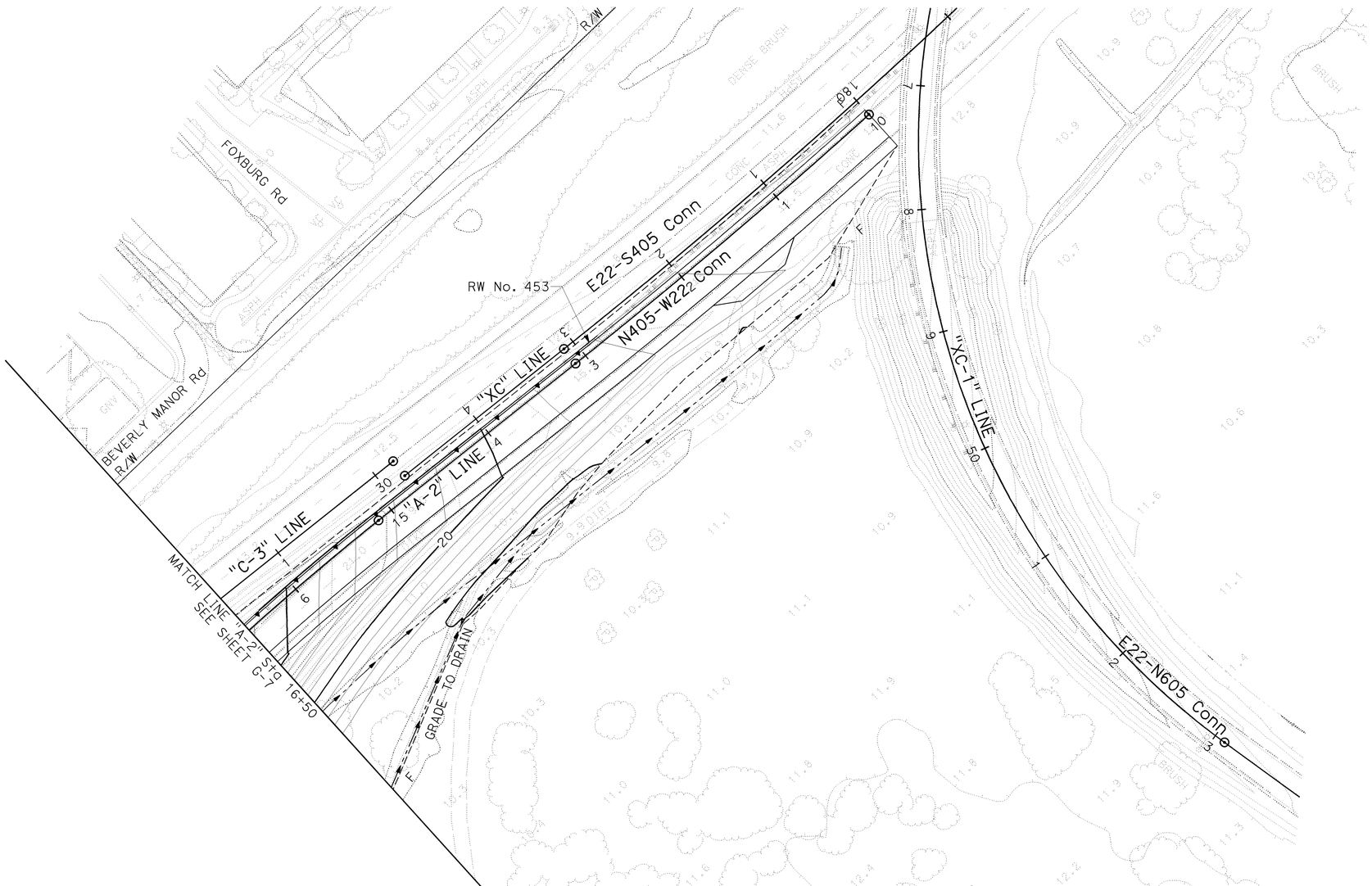

CONTOUR GRADING

SCALE: 1" = 50'

G-15

THIS PLAN ACCURATE FOR CONTOUR GRADING WORK ONLY.

STATE OF CALIFORNIA - DEPARTMENT OF TRANSPORTATION	ERIC JOHNSON	DBL	8/10/09
Caltrans	DAVID LEW	CALCULATED-DESIGNED BY	DATE REVISED
CONSULTANT FUNCTIONAL SUPERVISOR	ROSS LEW	CHECKED BY	REVISED BY

LAST REVISION 08-10-09 | DATE PLOTTED => 03-FEB-2010 | TIME PLOTTED => 10:16

BORDER LAST REVISED 8/1/2008 | RELATIVE BORDER SCALE IS IN INCHES 0 1 2 3 | USERNAME => trmariak | DGN FILE => c07163ha015.dgn | CU 12235 | EA 071631

Dist	COUNTY	ROUTE	POST MILES TOTAL PROJECT	SHEET No.	TOTAL SHEETS
12	Ora	22,405, 605	R0.3/R0.9, 22.3/24.0,3.0/R1.6	328	1929

David Lew 8/10/09
REGISTERED CIVIL ENGINEER DATE

2-1-10
PLANS APPROVAL DATE

REGISTERED PROFESSIONAL ENGINEER
DAVID LEW
No. C59063
Exp. 6/30/11
CIVIL
STATE OF CALIFORNIA

THE STATE OF CALIFORNIA OR ITS OFFICERS OR AGENTS SHALL NOT BE RESPONSIBLE FOR THE ACCURACY OR COMPLETENESS OF ELECTRONIC COPIES OF THIS PLAN SHEET.

TRC
21 TECHNOLOGY Dr
IRVINE, CA 92618

ORANGE COUNTY
TRANSPORTATION AUTHORITY
550 S. MAIN STREET
ORANGE, CA 92863-1584

NOTE:

1. FOR COMPLETE RIGHT OF WAY AND ACCURATE ACCESS DATA, SEE RIGHT OF WAY RECORD MAPS AT DISTRICT OFFICE.

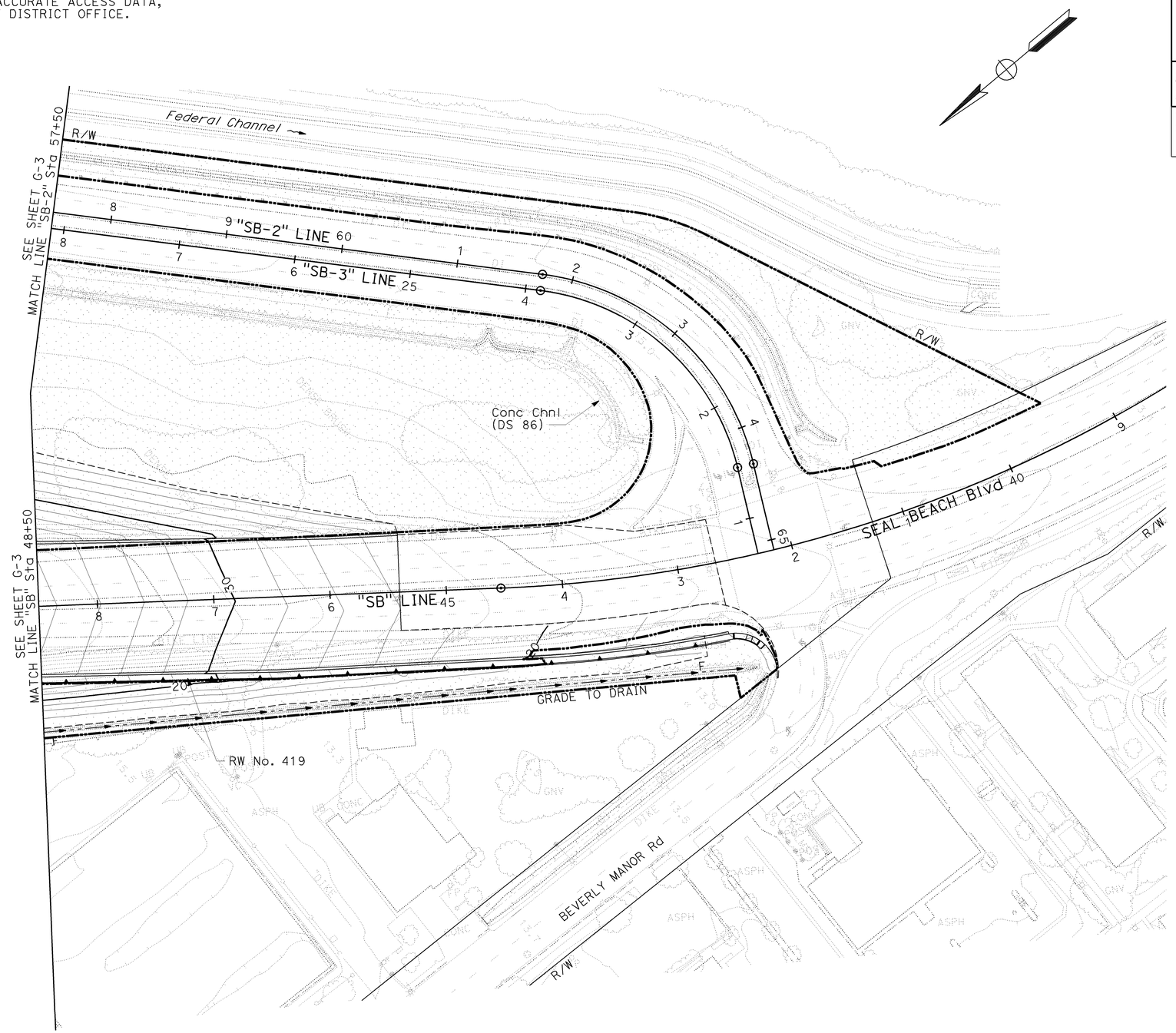

CONTOUR GRADING

SCALE: 1" = 50'

G-16

THIS PLAN ACCURATE FOR CONTOUR GRADING WORK ONLY.

STATE OF CALIFORNIA - DEPARTMENT OF TRANSPORTATION
Caltrans

CONSULTANT FUNCTIONAL SUPERVISOR: ROSS LEW

CALCULATED-DESIGNED BY: ERIC JOHNSON
CHECKED BY: DAVID LEW
REVISED BY: DBL
DATE REVISED: 8/10/09

LAST REVISION DATE PLOTTED => 03-FEB-2010
TIME PLOTTED => 10:16
08-10-09

BORDER LAST REVISED 8/1/2008

RELATIVE BORDER SCALE IS IN INCHES 0 1 2 3

USERNAME => trmariak
DGN FILE => c07163hq016.dgn

CU 12235

EA 071631

Dist	COUNTY	ROUTE	POST MILES TOTAL PROJECT	SHEET No.	TOTAL SHEETS
12	Ora	22,405, 605	R0.3/R0.9, 22.3/24.0,3.0/R1.6	329	1929

David Lew 8/10/09
REGISTERED CIVIL ENGINEER DATE

2-1-10
PLANS APPROVAL DATE

REGISTERED PROFESSIONAL ENGINEER
DAVID LEW
No. C59063
Exp. 6/30/11
CIVIL
STATE OF CALIFORNIA

THE STATE OF CALIFORNIA OR ITS OFFICERS OR AGENTS SHALL NOT BE RESPONSIBLE FOR THE ACCURACY OR COMPLETENESS OF ELECTRONIC COPIES OF THIS PLAN SHEET.

TRC
21 TECHNOLOGY Dr
IRVINE, CA 92618

ORANGE COUNTY
TRANSPORTATION AUTHORITY
550 S. MAIN STREET
ORANGE, CA 92863-1584

NOTE:

1. FOR COMPLETE RIGHT OF WAY AND ACCURATE ACCESS DATA, SEE RIGHT OF WAY RECORD MAPS AT DISTRICT OFFICE.

CONTOUR GRADING

SCALE: 1" = 50'

G-17

THIS PLAN ACCURATE FOR CONTOUR GRADING WORK ONLY.

STATE OF CALIFORNIA - DEPARTMENT OF TRANSPORTATION	CONSULTANT FUNCTIONAL SUPERVISOR: ROSS LEW	REVISED BY: DBL	DATE REVISED: 8/10/09
Caltrans	CALCULATED-DESIGNED BY: ERIC JOHNSON		
	CHECKED BY: DAVID LEW		

LAST REVISION DATE PLOTTED => 03-FEB-2010
08-10-09 TIME PLOTTED => 10:17

BORDER LAST REVISED 8/1/2008 | RELATIVE BORDER SCALE IS IN INCHES 0 1 2 3 | USERNAME => trmariak DGN FILE => c07163ha017.dgn | CU 12235 | EA 071631

Dist	COUNTY	ROUTE	POST MILES TOTAL PROJECT	SHEET No.	TOTAL SHEETS
12	Ora	22,405, 605	R0.3/R0.9, 22.3/24.0,3.0/R1.6	330	1929

David Lew 12/22/09
REGISTERED CIVIL ENGINEER DATE

2-1-10
PLANS APPROVAL DATE

REGISTERED PROFESSIONAL ENGINEER
DAVID LEW
No. C59063
Exp. 6/30/11
CIVIL
STATE OF CALIFORNIA

THE STATE OF CALIFORNIA OR ITS OFFICERS OR AGENTS SHALL NOT BE RESPONSIBLE FOR THE ACCURACY OR COMPLETENESS OF ELECTRONIC COPIES OF THIS PLAN SHEET.

TRC
21 TECHNOLOGY Dr
IRVINE, CA 92618

ORANGE COUNTY
TRANSPORTATION AUTHORITY
550 S. MAIN STREET
ORANGE, CA 92863-1584

NOTE:

1. FOR COMPLETE RIGHT OF WAY AND ACCURATE ACCESS DATA, SEE RIGHT OF WAY RECORD MAPS AT DISTRICT OFFICE.

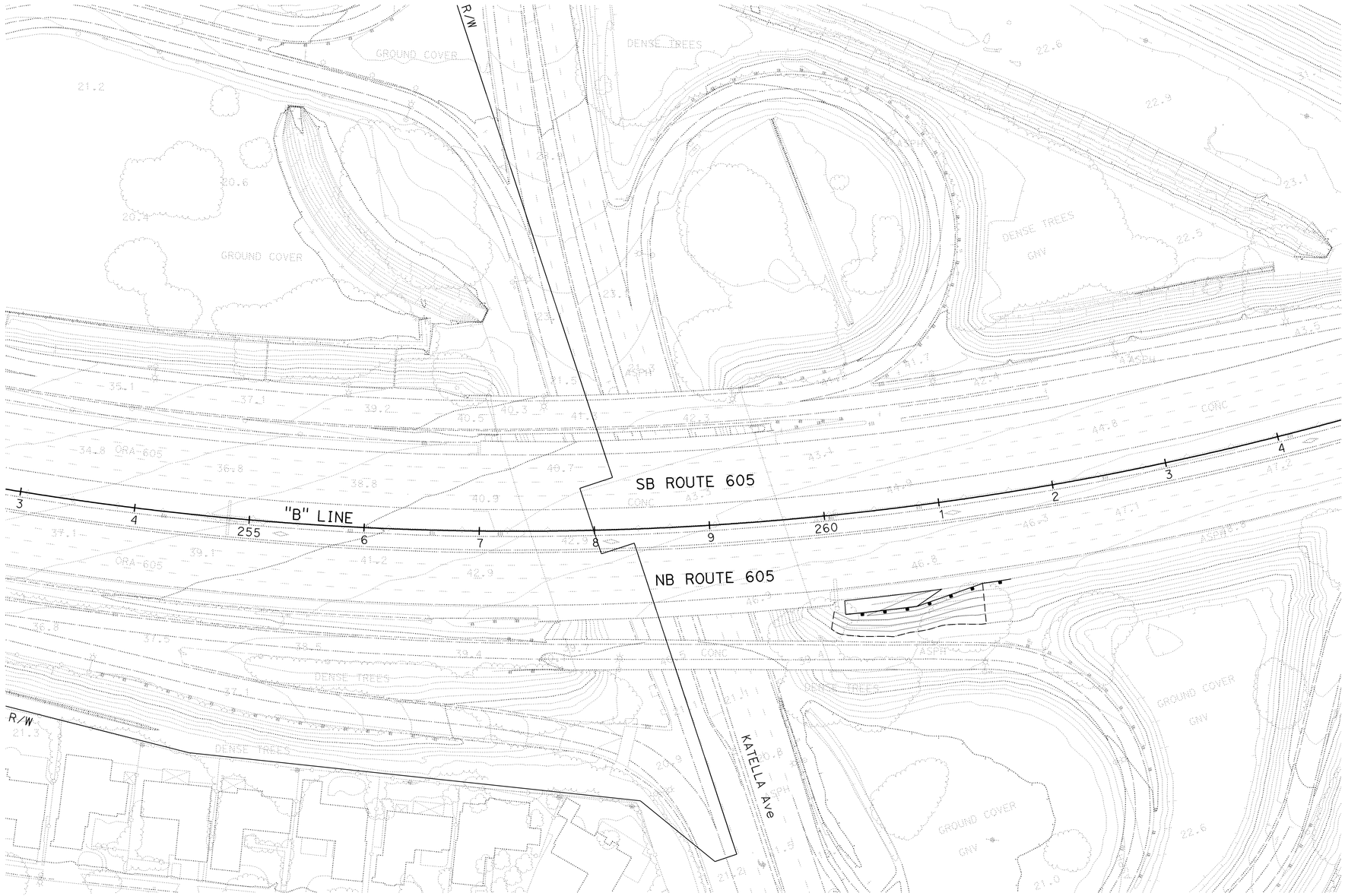

CONTOUR GRADING

SCALE: 1" = 50'

G-18

THIS PLAN ACCURATE FOR CONTOUR GRADING WORK ONLY.

STATE OF CALIFORNIA - DEPARTMENT OF TRANSPORTATION
Caltrans

CONSULTANT FUNCTIONAL SUPERVISOR: ROSS LEW
CALCULATED-DESIGNED BY:
CHECKED BY: DAVID LEW
REVISED BY: DBL
DATE REVISED: 8/10/09

LAST REVISION DATE PLOTTED => 03-FEB-2010
TIME PLOTTED => 10:17
08-10-09

BORDER LAST REVISED 8/1/2008

RELATIVE BORDER SCALE IS IN INCHES 0 1 2 3

USERNAME => trmariak
DGN FILE => c07163hq018.dgn

CU 12235

EA 071631

Dist	COUNTY	ROUTE	POST MILES TOTAL PROJECT	SHEET No.	TOTAL SHEETS
12	Ora	22,405, 605	R0.3/R0.9, 22.3/24.0,3.0/R1.6	331	1929

REGISTERED CIVIL ENGINEER — DATE 8/10/09

JENNIFER BROOKE RIVERA No. C70332 Exp. 09/30/10 CIVIL — REGISTERED PROFESSIONAL ENGINEER — STATE OF CALIFORNIA

2-1-10
PLANS APPROVAL DATE

THE STATE OF CALIFORNIA OR ITS OFFICERS OR AGENTS SHALL NOT BE RESPONSIBLE FOR THE ACCURACY OR COMPLETENESS OF ELECTRONIC COPIES OF THIS PLAN SHEET.

AECOM
999 TOWN & COUNTRY RD
ORANGE, CA 92868

ORANGE COUNTY
TRANSPORTATION AUTHORITY
550 S. MAIN STREET
ORANGE, CA 92863-1584

NOTE:

1. FOR COMPLETE RIGHT OF WAY AND ACCURATE ACCESS DATA, SEE RIGHT OF WAY RECORD MAPS AT DISTRICT OFFICE.

ABBREVIATIONS

ACOD	ASPHALT CONCRETE OVERSIDE DRAIN
CB	CATCH BASIN
HMAOD	HOT MIX ASPHALT OVERSIDE DRAIN
OCFCD	ORANGE COUNTY FLOOD CONTROL DISTRICT
TS†r	TRANSITION STRUCTURE
WWF	WELDED WIRE FABRIC

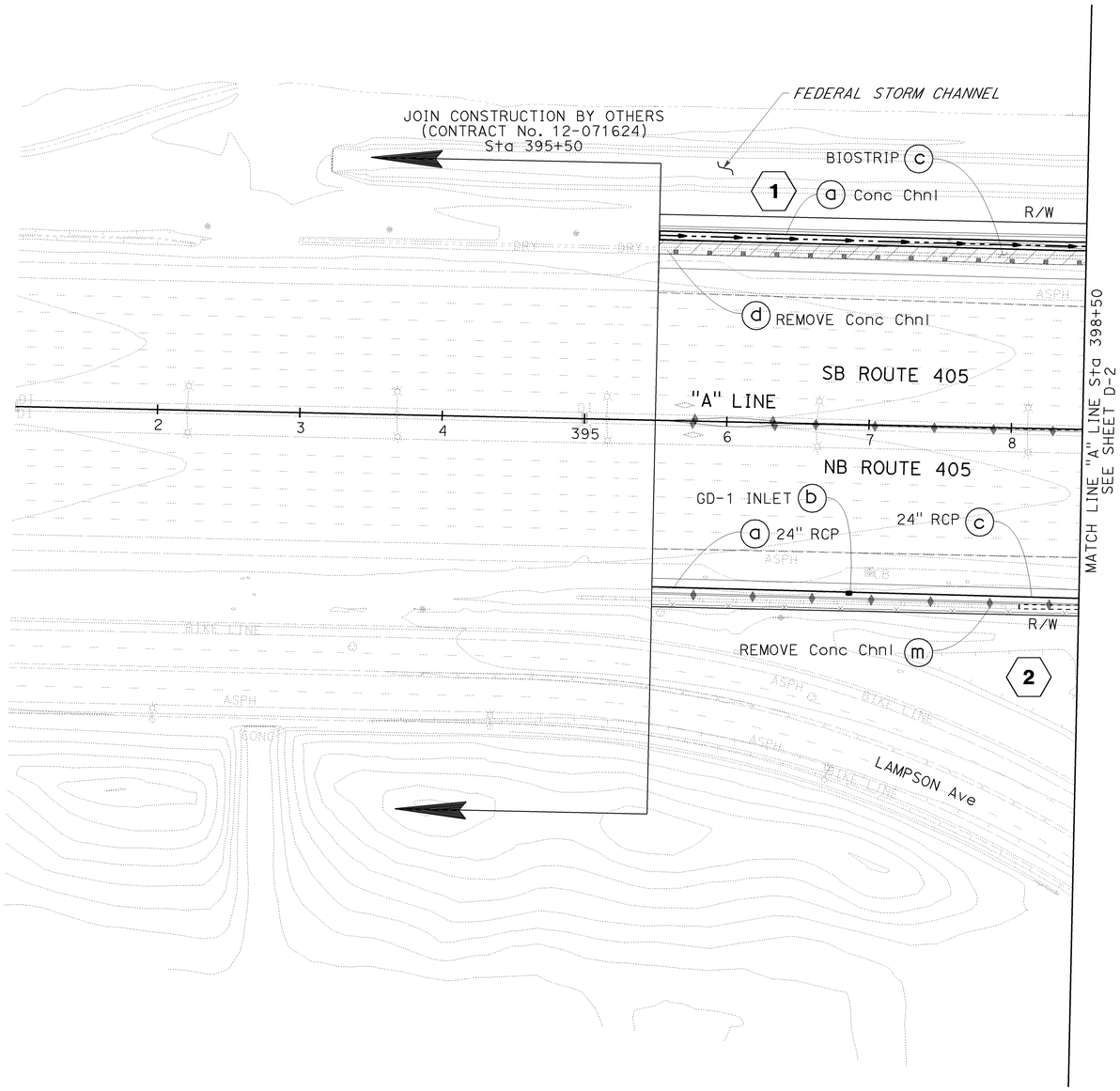

LEGEND

- X — DRAINAGE SYSTEM No.
- × — DRAINAGE UNIT No.
- RSP
- × — DRAINAGE CURVE DATA
- BIOSTRIP

DRAINAGE PLAN

SCALE: 1" = 50′

D-1

THIS PLAN ACCURATE FOR DRAINAGE WORK ONLY

REVISED BY	DUC TRAN	
DATE REVISED	8/10/09	
CALCULATED-DESIGNED BY	RASHOD GIBSON	
CHECKED BY	BROOKE RIVERA	
CONSULTANT FUNCTIONAL SUPERVISOR	ANDRZEJ NOWAK	
STATE OF CALIFORNIA - DEPARTMENT OF TRANSPORTATION	Caltrans	

LAST REVISION DATE PLOTTED => 03-FEB-2010
TIME PLOTTED => 10:17
08-10-09

BORDER LAST REVISED 8/1/2008 — RELATIVE BORDER SCALE IS IN INCHES 0 1 2 3 — USERNAME => trmariak — DGN FILE => c071631a001.dgn — CU 12235 — EA 071631

NOTE:

1. FOR COMPLETE RIGHT OF WAY AND ACCURATE ACCESS DATA, SEE RIGHT OF WAY RECORD MAPS AT DISTRICT OFFICE.

DRAINAGE CURVE DATA				
NO	R	Δ	T	L
1	20.00	80°30'12"	16.93	28.10
2	30.00	79°52'10"	25.11	41.82
3	30.00	75°00'00"	23.02	39.27
4	220.00	7°05'56"	13.65	27.26
5	220.00	6°45'38"	12.99	25.96
6	2965.00	2°49'10"	72.96	145.90

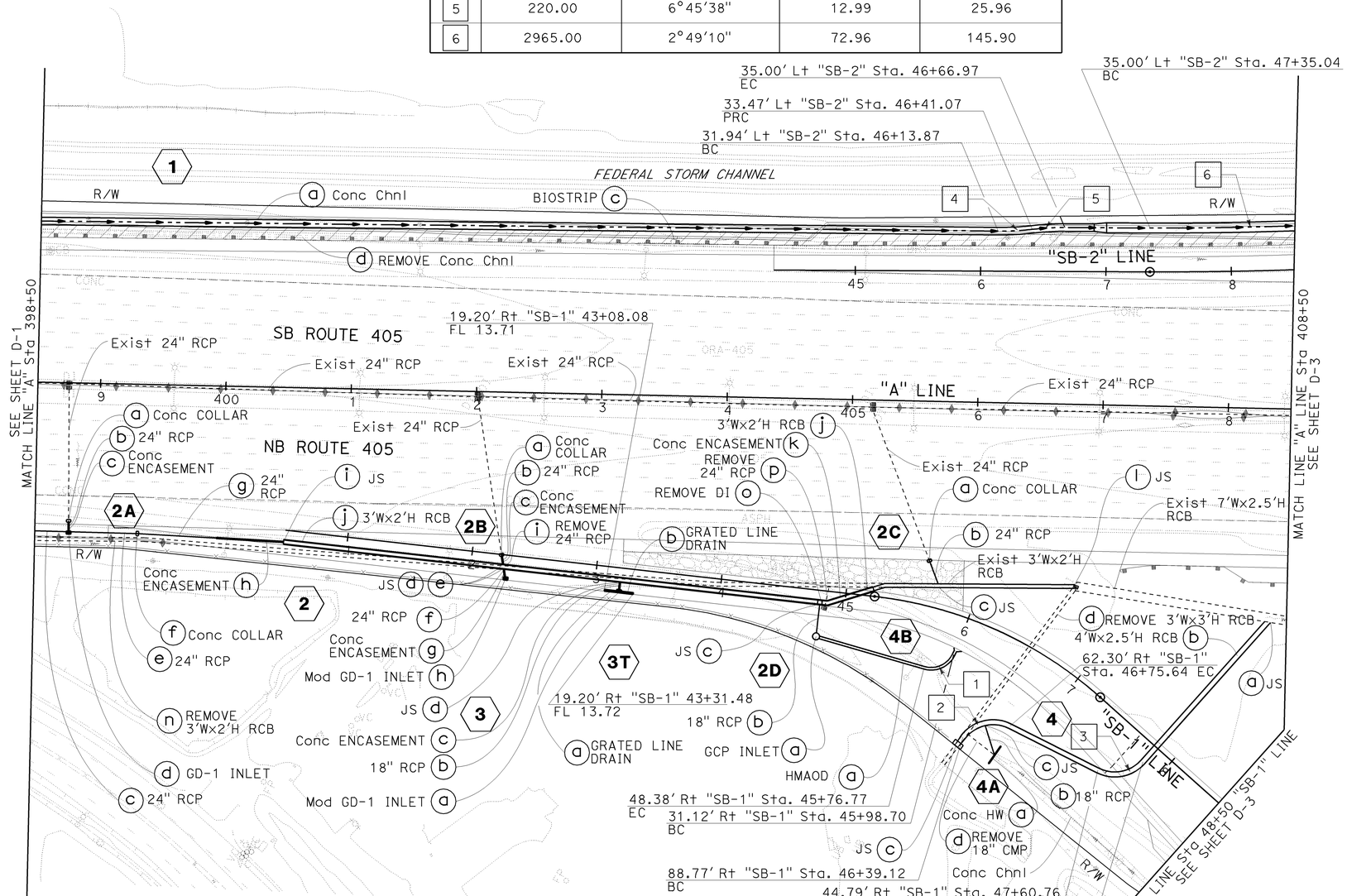

Dist	COUNTY	ROUTE	POST MILES TOTAL PROJECT	SHEET No.	TOTAL SHEETS
12	Ora	22,405, 605	R0.3/R0.9, 22.3/24.0,3.0/R1.6	332	1929

8/10/09
REGISTERED CIVIL ENGINEER DATE

JENNIFER BROOKE RIVERA
No. C70332
Exp. 09/30/10
CIVIL
REGISTERED PROFESSIONAL ENGINEER
STATE OF CALIFORNIA

2-1-10
PLANS APPROVAL DATE

THE STATE OF CALIFORNIA OR ITS OFFICERS OR AGENTS SHALL NOT BE RESPONSIBLE FOR THE ACCURACY OR COMPLETENESS OF ELECTRONIC COPIES OF THIS PLAN SHEET.

AECOM
999 TOWN & COUNTRY RD
ORANGE, CA 92868

ORANGE COUNTY TRANSPORTATION AUTHORITY
550 S. MAIN STREET
ORANGE, CA 92863-1584

DRAINAGE PLAN

SCALE: 1" = 50'

D-2

THIS PLAN ACCURATE FOR DRAINAGE WORK ONLY

REVISED BY: DUC TRAN — DATE REVISED: 8/10/09
CALCULATED-DESIGNED BY: RASHOD GIBSON
CHECKED BY: BROOKE RIVERA
CONSULTANT FUNCTIONAL SUPERVISOR: ANDRZEJ NOWAK
STATE OF CALIFORNIA - DEPARTMENT OF TRANSPORTATION
Caltrans

LAST REVISION: 08-10-09 | DATE PLOTTED => 03-FEB-2010 | TIME PLOTTED => 10:25

BORDER LAST REVISED 8/1/2008 | RELATIVE BORDER SCALE IS IN INCHES 0 1 2 3 | USERNAME => trmariak | DGN FILE => c071631a002.dgn | CU 12235 | EA 071631

Dist	COUNTY	ROUTE	POST MILES TOTAL PROJECT	SHEET No.	TOTAL SHEETS
12	Ora	22,405, 605	R0.3/R0.9, 22.3/24.0,3.0/R1.6	333	1929

REGISTERED CIVIL ENGINEER — 8/10/09 DATE

JENNIFER BROOKE RIVERA No. C70332 Exp.09/30/10 CIVIL — REGISTERED PROFESSIONAL ENGINEER — STATE OF CALIFORNIA

2-1-10
PLANS APPROVAL DATE

THE STATE OF CALIFORNIA OR ITS OFFICERS OR AGENTS SHALL NOT BE RESPONSIBLE FOR THE ACCURACY OR COMPLETENESS OF ELECTRONIC COPIES OF THIS PLAN SHEET.

AECOM
999 TOWN & COUNTRY RD
ORANGE, CA 92868

ORANGE COUNTY TRANSPORTATION AUTHORITY
550 S. MAIN STREET
ORANGE, CA 92863-1584

DRAINAGE CURVE DATA				
NO	R	Δ	T	L
7	360.0	39°11'13"	128.14	246.22
8	70.0	79°46'50"	58.51	97.47
9	110.00	64°45'58"	69.76	124.34
10	100.00	12°38'46"	11.08	22.07
11	100.00	13°24'32"	11.75	23.40

NOTE:
1. FOR COMPLETE RIGHT OF WAY AND ACCURATE ACCESS DATA, SEE RIGHT OF WAY RECORD MAPS AT DISTRICT OFFICE.

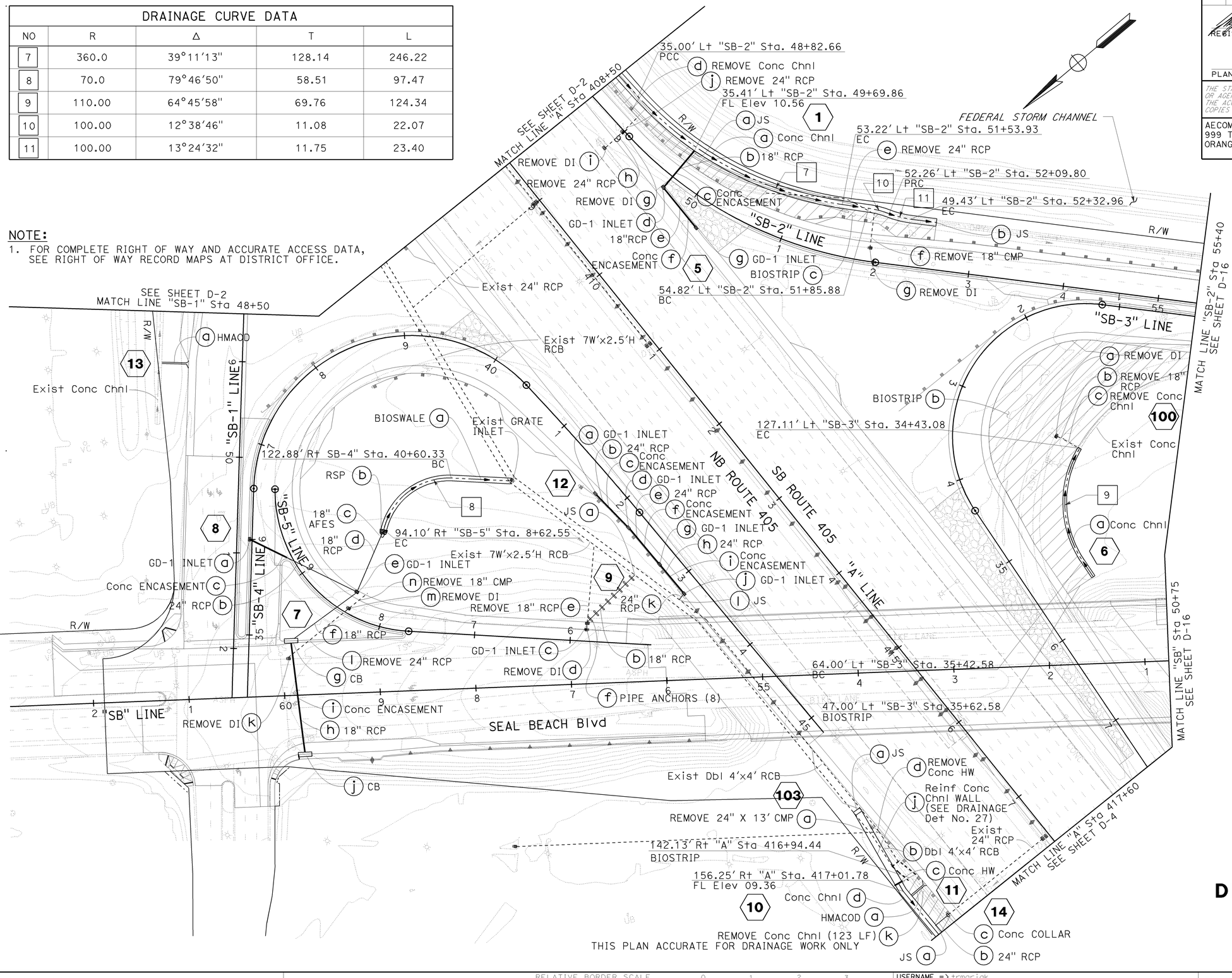

DRAINAGE PLAN

SCALE: 1" = 50'

D-3

LAST REVISION DATE PLOTTED => 03-FEB-2010
08-10-09 TIME PLOTTED => 10:25

STATE OF CALIFORNIA - DEPARTMENT OF TRANSPORTATION
Caltrans

REVISED BY	DATE REVISED
DUC TRAN	8/10/09

CALCULATED-DESIGNED BY: RASHOD GIBSON
CHECKED BY: BROOKE RIVERA
CONSULTANT FUNCTIONAL SUPERVISOR: ANDRZEJ NOWAK

BORDER LAST REVISED 8/1/2008

RELATIVE BORDER SCALE IS IN INCHES 0 1 2 3

USERNAME => trmariak
DGN FILE => c071631a003.dgn

CU 12235

EA 071631

NOTE:

1. FOR COMPLETE RIGHT OF WAY AND ACCURATE ACCESS DATA, SEE RIGHT OF WAY RECORD MAPS AT DISTRICT OFFICE.

DRAINAGE CURVE DATA				
NO	R	Δ	T	L
12	15.0	89°56'00"	14.98	23.54
13	23.5	30°48'57"	6.48	12.64

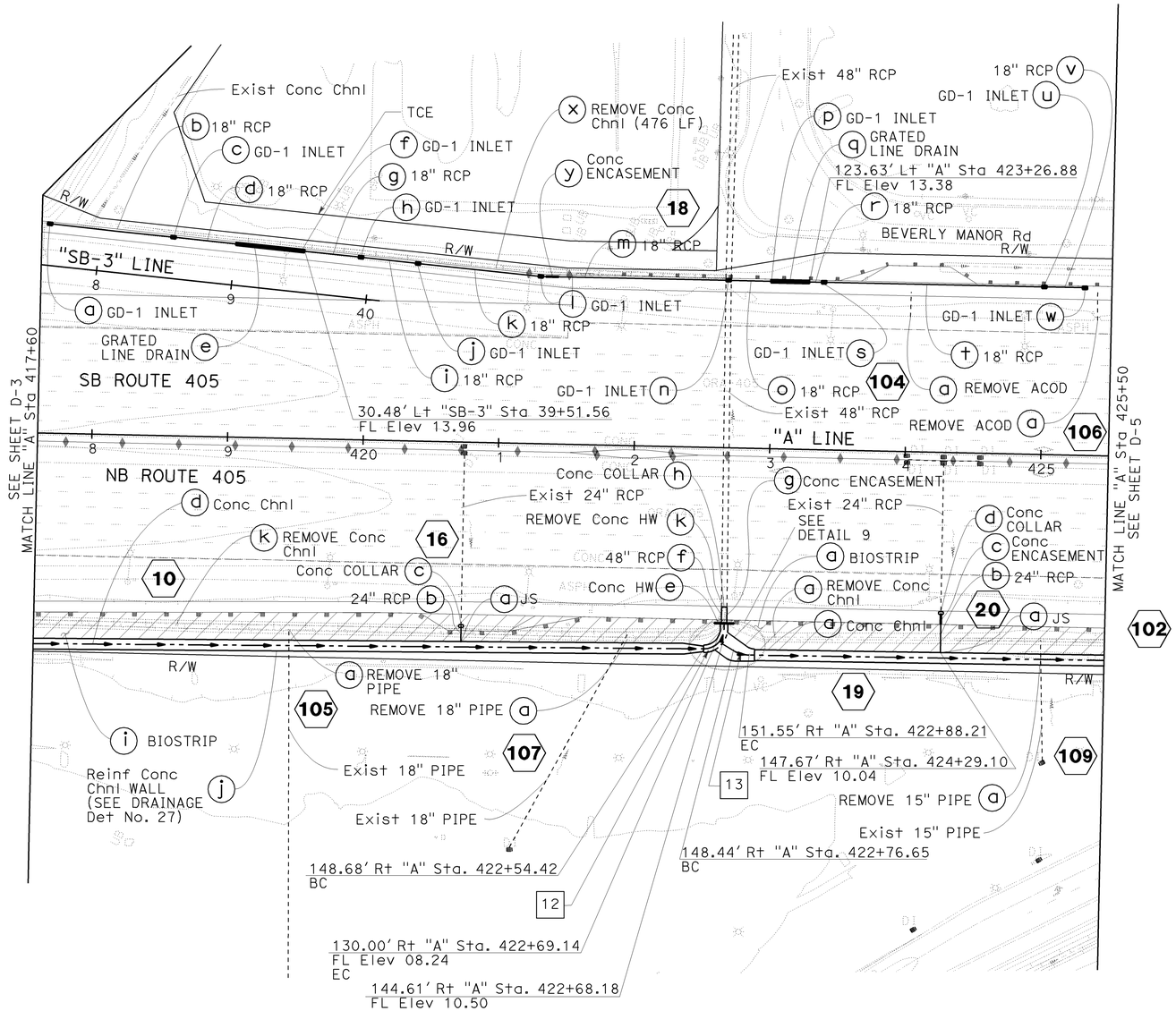

THIS PLAN ACCURATE FOR DRAINAGE WORK ONLY

Dist	COUNTY	ROUTE	POST MILES TOTAL PROJECT	SHEET No.	TOTAL SHEETS
12	Ora	22,405, 605	R0.3/R0.9, 22.3/24.0,3.0/R1.6	334	1929

REGISTERED CIVIL ENGINEER — 8/10/09 DATE

JENNIFER BROOKE RIVERA No. C70332 Exp. 09/30/10 CIVIL — REGISTERED PROFESSIONAL ENGINEER — STATE OF CALIFORNIA

2-1-10
PLANS APPROVAL DATE

THE STATE OF CALIFORNIA OR ITS OFFICERS OR AGENTS SHALL NOT BE RESPONSIBLE FOR THE ACCURACY OR COMPLETENESS OF ELECTRONIC COPIES OF THIS PLAN SHEET.

AECOM
999 TOWN & COUNTRY RD
ORANGE, CA 92868

ORANGE COUNTY TRANSPORTATION AUTHORITY
550 S. MAIN STREET
ORANGE, CA 92863-1584

DRAINAGE PLAN

SCALE: 1" = 50'

D-4

REVISED BY	DATE REVISED
DUC TRAN	8/10/09

CALCULATED-DESIGNED BY: RASHOD GIBSON
CHECKED BY: BROOKE RIVERA

CONSULTANT FUNCTIONAL SUPERVISOR: ANDRZEJ NOWAK

STATE OF CALIFORNIA - DEPARTMENT OF TRANSPORTATION

LAST REVISION: DATE PLOTTED => 03-FEB-2010
08-10-09 TIME PLOTTED => 10:17

BORDER LAST REVISED 8/1/2008

RELATIVE BORDER SCALE IS IN INCHES 0 1 2 3

USERNAME => trmariak
DGN FILE => c071631a004.dgn

CU 12235

EA 071631

Dist	COUNTY	ROUTE	POST MILES TOTAL PROJECT	SHEET No.	TOTAL SHEETS
12	Ora	22,405, 605	R0.3/R0.9, 22.3/24.0,3.0/R1.6	335	1929

REGISTERED CIVIL ENGINEER — 12/22/09 DATE

JENNIFER BROOKE RIVERA No. C70332 Exp. 09/30/10 CIVIL — REGISTERED PROFESSIONAL ENGINEER — STATE OF CALIFORNIA

2-1-10
PLANS APPROVAL DATE

THE STATE OF CALIFORNIA OR ITS OFFICERS OR AGENTS SHALL NOT BE RESPONSIBLE FOR THE ACCURACY OR COMPLETENESS OF ELECTRONIC COPIES OF THIS PLAN SHEET.

AECOM
999 TOWN & COUNTRY RD
ORANGE, CA 92868

ORANGE COUNTY
TRANSPORTATION AUTHORITY
550 S. MAIN STREET
ORANGE, CA 92863-1584

NOTE:

1. FOR COMPLETE RIGHT OF WAY AND ACCURATE ACCESS DATA, SEE RIGHT OF WAY RECORD MAPS AT DISTRICT OFFICE.
2. FOR ALIGNMENT DATA ON SYSTEM 21 SEE DRAINAGE DETAILS

DRAINAGE CURVE DATA				
No.	R	Δ	T	L
14	9.0	73°52'23"	6.77	11.60

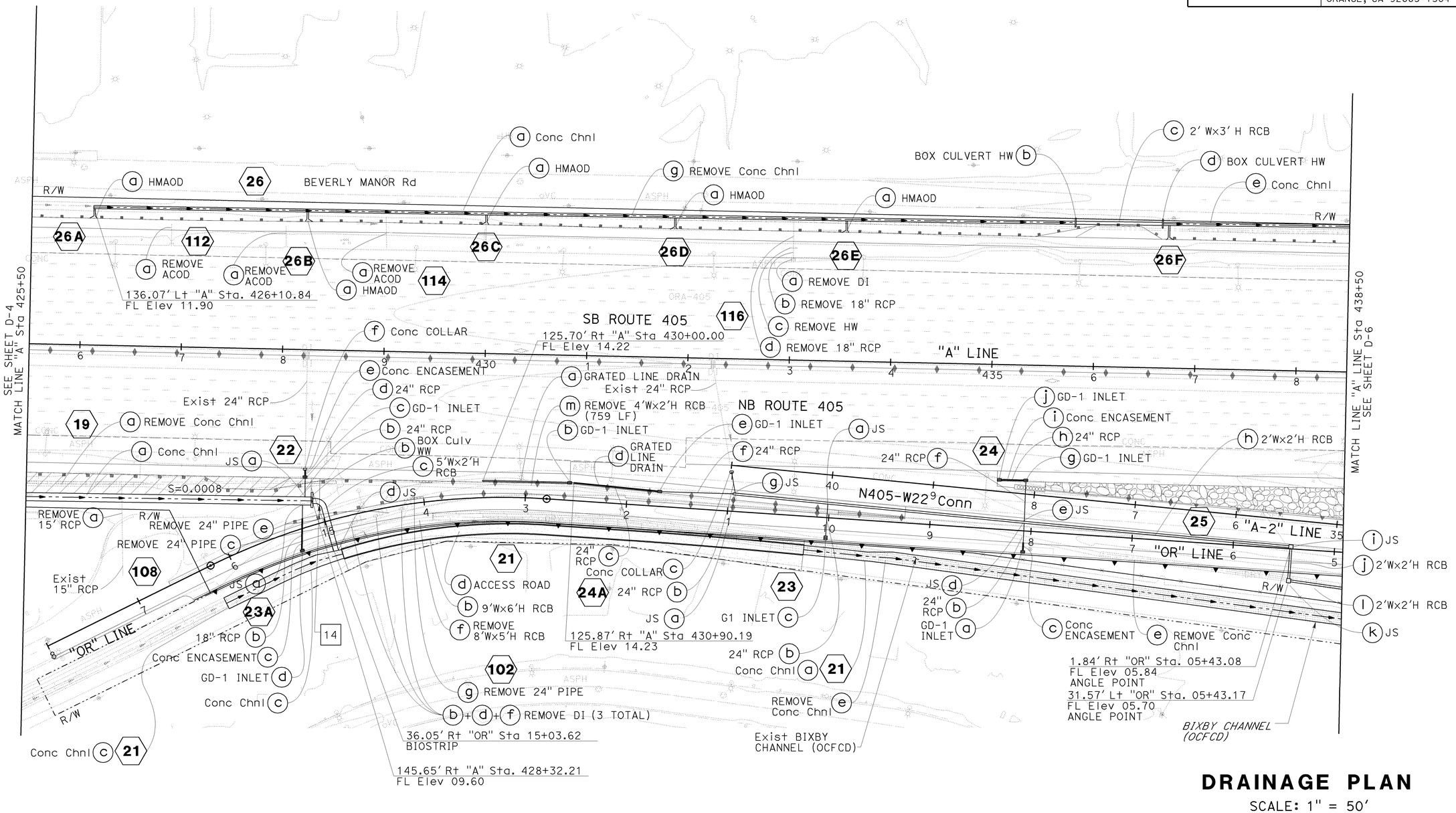

DRAINAGE PLAN

SCALE: 1" = 50'

D-5

THIS PLAN ACCURATE FOR DRAINAGE WORK ONLY

STATE OF CALIFORNIA - DEPARTMENT OF TRANSPORTATION

CONSULTANT FUNCTIONAL SUPERVISOR: ANDRZEJ NOWAK

CALCULATED-DESIGNED BY: RASHOD GIBSON

CHECKED BY: BROOKE RIVERA

REVISED BY	DATE REVISED
DUC TRAN	8/10/09

LAST REVISION: DATE PLOTTED => 03-FEB-2010
08-10-09 TIME PLOTTED => 10:17

BORDER LAST REVISED 8/1/2008

RELATIVE BORDER SCALE IS IN INCHES 0 1 2 3

USERNAME => trmariak
DGN FILE => c07163ia005.dgn

CU 12235

EA 071631

NOTE:

1. FOR COMPLETE RIGHT OF WAY AND ACCURATE ACCESS DATA, SEE RIGHT OF WAY RECORD MAPS AT DISTRICT OFFICE.

DRAINAGE CURVE DATA				
NO	R	Δ	T	L
15	15.0	89°48'07"	14.95	23.51
16	90.0	18°02'17"	14.29	28.33

NOTE

FOR SYSTEMS 30A, 30B, 30C AND 30D CONSTRUCTION ITEMS ARE:

(c) Conc COLLAR
(d) VERTICAL CONNECTOR
(e) Conc ENCASEMENTS
(f) G1 INLET

Dist	COUNTY	ROUTE	POST MILES TOTAL PROJECT	SHEET No.	TOTAL SHEETS
12	Ora	22,405, 605	R0.3/R0.9, 22.3/24.0,3.0/R1.6	336	1929

REGISTERED CIVIL ENGINEER — DATE 8/10/09

JENNIFER BROOKE RIVERA No. C70332 Exp.09/30/10 CIVIL — REGISTERED PROFESSIONAL ENGINEER — STATE OF CALIFORNIA

2-1-10
PLANS APPROVAL DATE

THE STATE OF CALIFORNIA OR ITS OFFICERS OR AGENTS SHALL NOT BE RESPONSIBLE FOR THE ACCURACY OR COMPLETENESS OF ELECTRONIC COPIES OF THIS PLAN SHEET.

AECOM
999 TOWN & COUNTRY RD
ORANGE, CA 92868

ORANGE COUNTY TRANSPORTATION AUTHORITY
550 S. MAIN STREET
ORANGE, CA 92863-1584

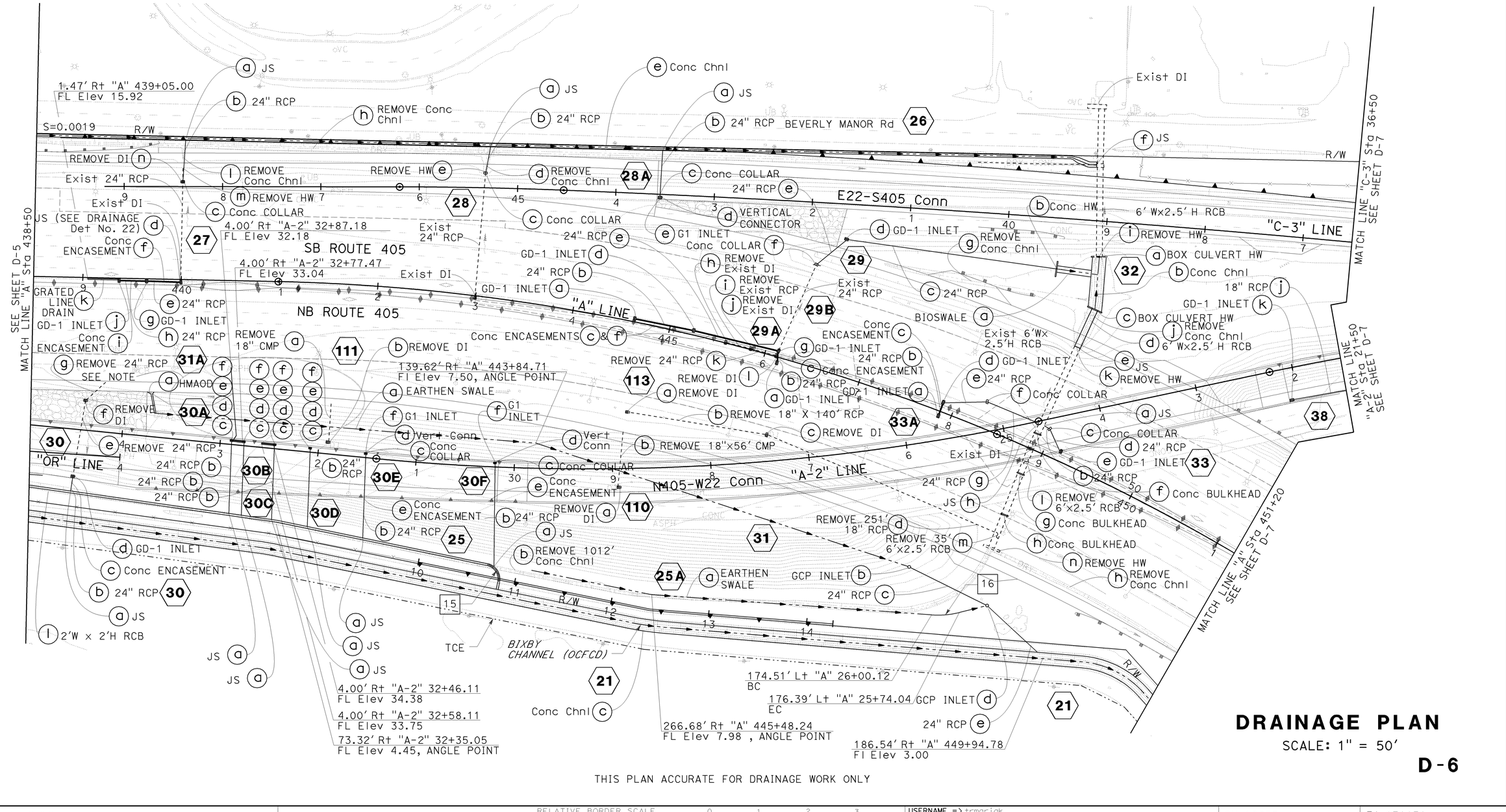

DRAINAGE PLAN

SCALE: 1" = 50'

D-6

THIS PLAN ACCURATE FOR DRAINAGE WORK ONLY

DUC TRAN 8/10/09 — REVISED BY / DATE REVISED
RASHOD GIBSON BROOKE RIVERA — CALCULATED-DESIGNED BY / CHECKED BY
CONSULTANT FUNCTIONAL SUPERVISOR: ANDRZEJ NOWAK
STATE OF CALIFORNIA - DEPARTMENT OF TRANSPORTATION — Caltrans

LAST REVISION DATE PLOTTED => 03-FEB-2010
08-10-09 TIME PLOTTED => 10:17

BORDER LAST REVISED 8/1/2008 | RELATIVE BORDER SCALE IS IN INCHES 0 1 2 3 | USERNAME => trmariak DGN FILE => c071631a006.dgn | CU 12235 | EA 071631

NOTE:

1. FOR COMPLETE RIGHT OF WAY AND ACCURATE ACCESS DATA, SEE RIGHT OF WAY RECORD MAPS AT DISTRICT OFFICE.

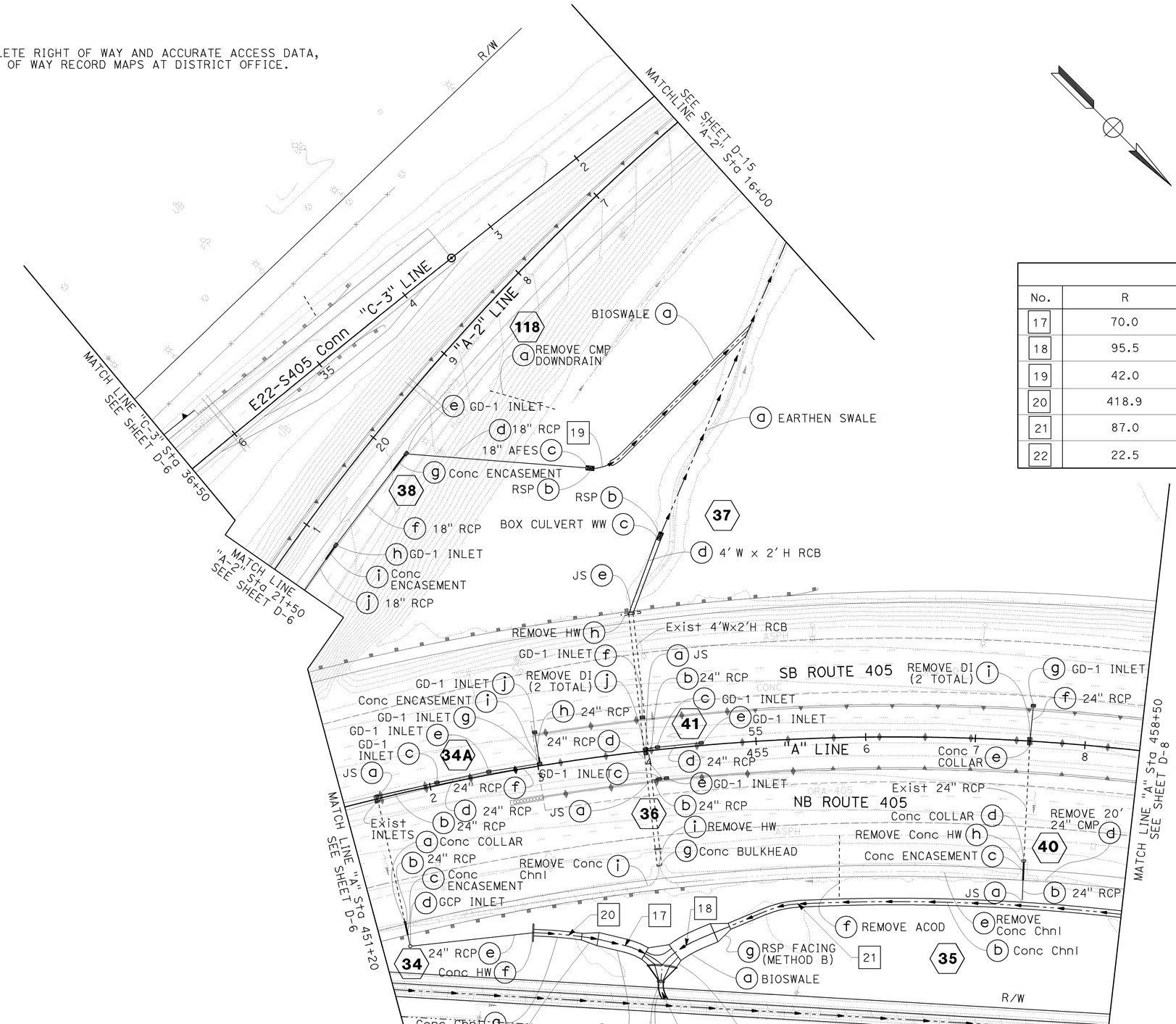

Dist	COUNTY	ROUTE	POST MILES TOTAL PROJECT	SHEET No.	TOTAL SHEETS
12	Ora	22,405, 605	R0.3/R0.9, 22.3/24.0,3.0/R1.6	337	1929

REGISTERED CIVIL ENGINEER — 8/10/09 DATE

JENNIFER BROOKE RIVERA No. C70332 Exp.09/30/10 CIVIL — REGISTERED PROFESSIONAL ENGINEER — STATE OF CALIFORNIA

2-1-10
PLANS APPROVAL DATE

THE STATE OF CALIFORNIA OR ITS OFFICERS OR AGENTS SHALL NOT BE RESPONSIBLE FOR THE ACCURACY OR COMPLETENESS OF ELECTRONIC COPIES OF THIS PLAN SHEET.

AECOM
999 TOWN & COUNTRY RD
ORANGE, CA 92868

ORANGE COUNTY TRANSPORTATION AUTHORITY
550 S. MAIN STREET
ORANGE, CA 92863-1584

DRAINAGE CURVE DATA

No.	R	Δ	T	L
17	70.0	15°57'48"	9.82	19.50
18	95.5	14°21'58"	12.16	24.20
19	42.0	39°15'19"	14.98	28.78
20	418.9	08°03'44"	29.52	58.94
21	87.0	19°54'55"	15.27	30.24
22	22.5	31°26'36"	6.33	12.35

THIS PLAN ACCURATE FOR DRAINAGE WORK ONLY

DRAINAGE PLAN

SCALE: 1" = 50'

D-7

REVISED BY	DATE REVISED
DUC TRAN	8/10/09

CALCULATED-DESIGNED BY: RASHOD GIBSON
CHECKED BY: BROOKE RIVERA
CONSULTANT FUNCTIONAL SUPERVISOR: ANDRZEJ NOWAK
STATE OF CALIFORNIA - DEPARTMENT OF TRANSPORTATION
Caltrans

LAST REVISION: DATE PLOTTED => 03-FEB-2010 08-10-09 TIME PLOTTED => 10:17

BORDER LAST REVISED 8/1/2008 | RELATIVE BORDER SCALE IS IN INCHES 0 1 2 3 | USERNAME => trmariak DGN FILE => c07163ia007.dgn | CU 12235 | EA 071631

NOTE:

1. FOR COMPLETE RIGHT OF WAY AND ACCURATE ACCESS DATA, SEE RIGHT OF WAY RECORD MAPS AT DISTRICT OFFICE.

Dist	COUNTY	ROUTE	POST MILES TOTAL PROJECT	SHEET No.	TOTAL SHEETS
12	Ora	22,405, 605	R0.3/R0.9, 22.3/24.0,3.0/R1.6	338	1929

8/10/09
REGISTERED CIVIL ENGINEER DATE

JENNIFER BROOKE RIVERA No. C70332 Exp.09/30/10 CIVIL — REGISTERED PROFESSIONAL ENGINEER — STATE OF CALIFORNIA

2-1-10
PLANS APPROVAL DATE

THE STATE OF CALIFORNIA OR ITS OFFICERS OR AGENTS SHALL NOT BE RESPONSIBLE FOR THE ACCURACY OR COMPLETENESS OF ELECTRONIC COPIES OF THIS PLAN SHEET.

AECOM
999 TOWN & COUNTRY RD
ORANGE, CA 92868

ORANGE COUNTY
TRANSPORTATION AUTHORITY
550 S. MAIN STREET
ORANGE, CA 92863-1584

DRAINAGE CURVE DATA				
No.	R	Δ	T	L
23	1850.0	20°32'38"	335.27	663.33

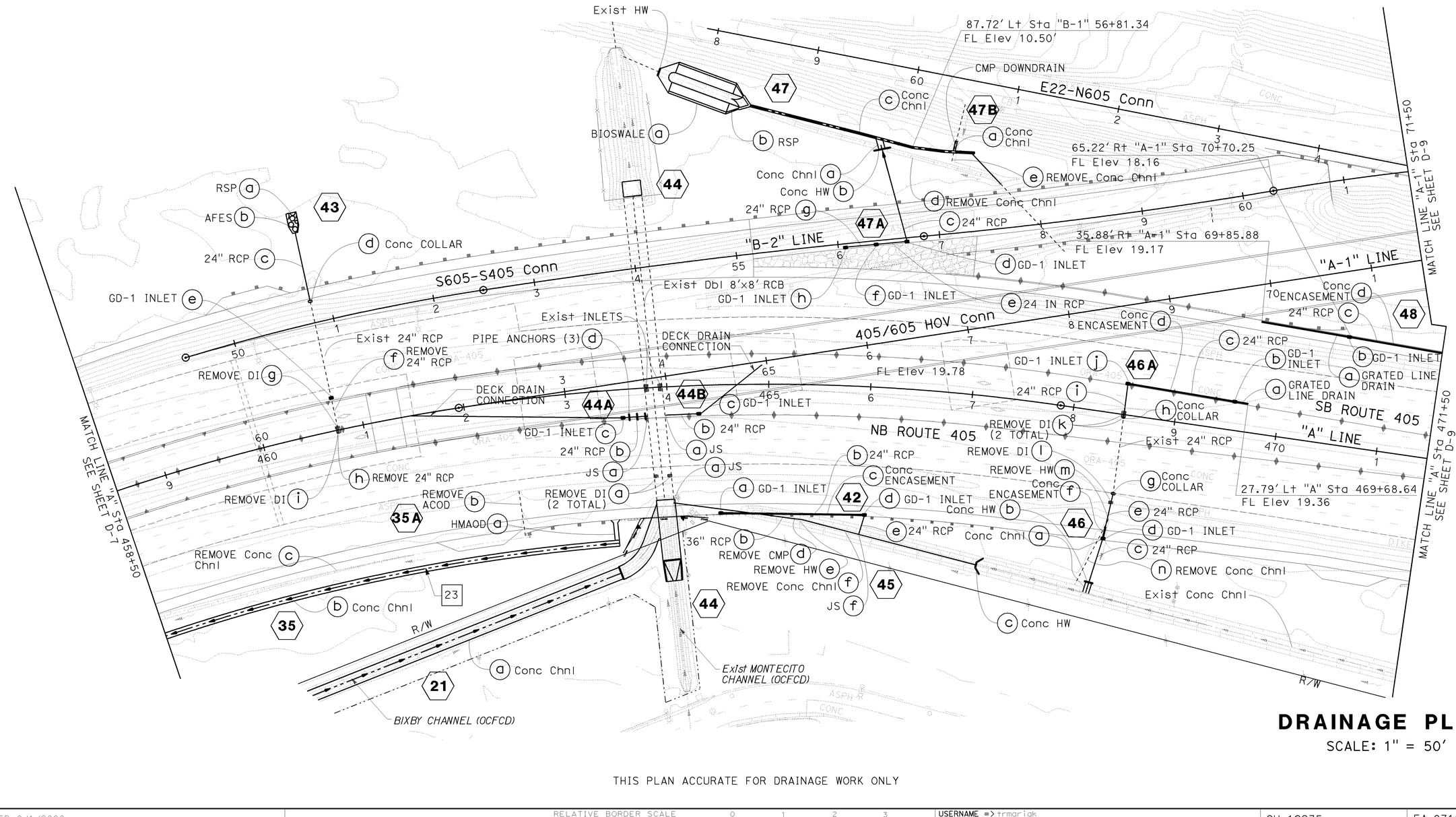

DRAINAGE PLAN

SCALE: 1" = 50'

D-8

THIS PLAN ACCURATE FOR DRAINAGE WORK ONLY

STATE OF CALIFORNIA - DEPARTMENT OF TRANSPORTATION
CONSULTANT FUNCTIONAL SUPERVISOR: ANDRZEJ NOWAK
CALCULATED-DESIGNED BY: RASHOD GIBSON
CHECKED BY: BROOKE RIVERA
REVISED BY: DUC TRAN
DATE REVISED: 8/10/09

LAST REVISION | DATE PLOTTED => 03-FEB-2010 | 08-10-09 | TIME PLOTTED => 10:18

BORDER LAST REVISED 8/1/2008 | RELATIVE BORDER SCALE IS IN INCHES 0 1 2 3 | USERNAME => trmariak | DGN FILE => c07163ia008.dgn | CU 12235 | EA 071631

Dist	COUNTY	ROUTE	POST MILES TOTAL PROJECT	SHEET No.	TOTAL SHEETS
12	Ora	22,405, 605	R0.3/R0.9, 22.3/24.0,3.0/R1.6	339	1929

REGISTERED CIVIL ENGINEER — 8/10/09 DATE

JENNIFER BROOKE RIVERA No. C70332 Exp. 09/30/10 CIVIL — REGISTERED PROFESSIONAL ENGINEER — STATE OF CALIFORNIA

2-1-10
PLANS APPROVAL DATE

THE STATE OF CALIFORNIA OR ITS OFFICERS OR AGENTS SHALL NOT BE RESPONSIBLE FOR THE ACCURACY OR COMPLETENESS OF ELECTRONIC COPIES OF THIS PLAN SHEET.

AECOM
999 TOWN & COUNTRY RD
ORANGE, CA 92868

ORANGE COUNTY TRANSPORTATION AUTHORITY
550 S. MAIN STREET
ORANGE, CA 92863-1584

NOTE:

1. FOR COMPLETE RIGHT OF WAY AND ACCURATE ACCESS DATA, SEE RIGHT OF WAY RECORD MAPS AT DISTRICT OFFICE.

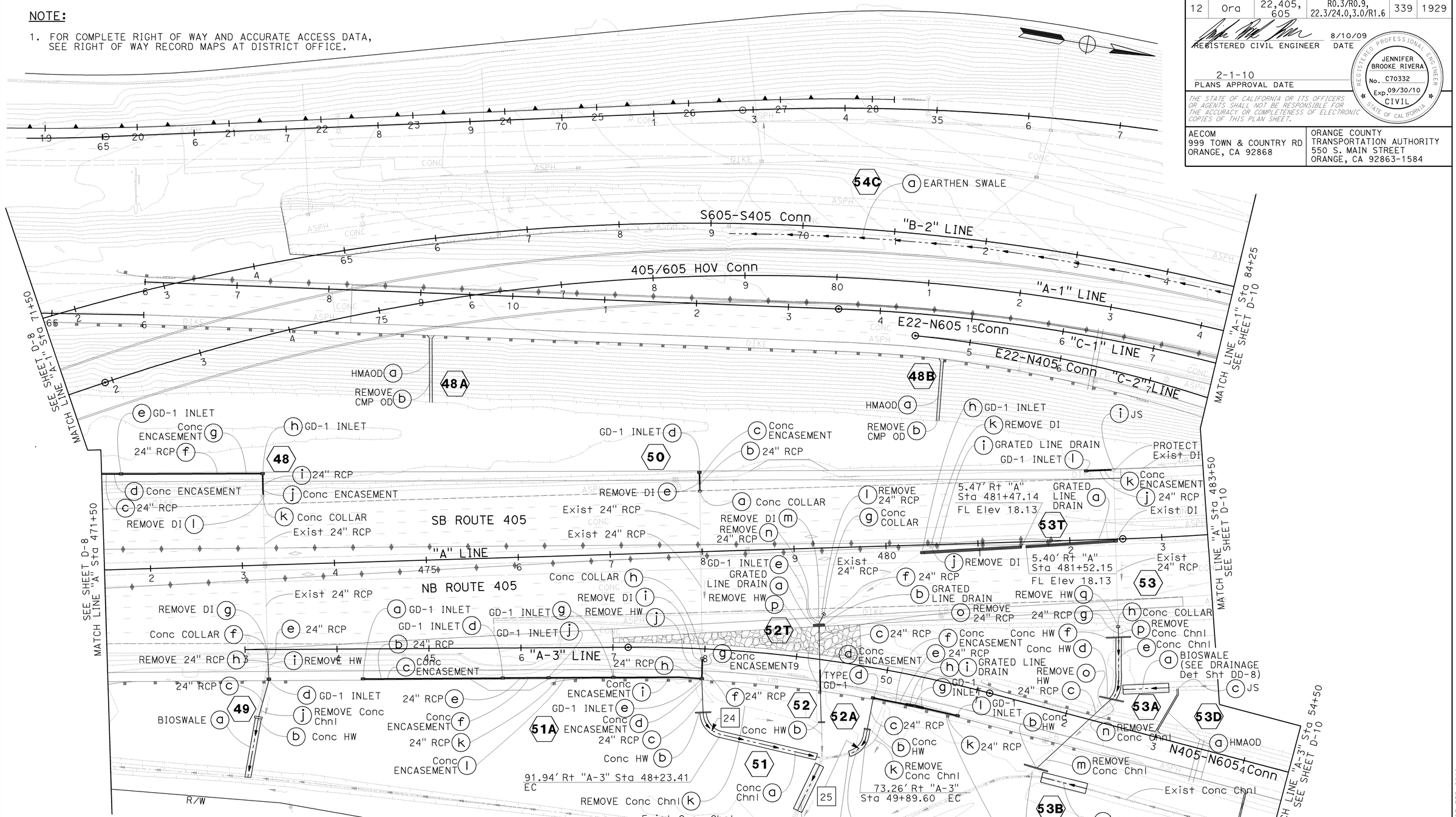

DRAINAGE CURVE DATA				
No.	R	Δ	T	L
24	25.0	75°05'51"	19.22	32.77
25	25.0	64°47'12"	15.86	28.27

THIS PLAN ACCURATE FOR DRAINAGE WORK ONLY

DRAINAGE PLAN

SCALE: 1" = 50'

D-9

STATE OF CALIFORNIA - DEPARTMENT OF TRANSPORTATION
CONSULTANT FUNCTIONAL SUPERVISOR: ANDRZEJ NOWAK
CALCULATED-DESIGNED BY: RASHOD GIBSON
CHECKED BY: BROOKE RIVERA
REVISED BY: DUC TRAN
DATE REVISED: 8/10/09

LAST REVISION DATE PLOTTED => 03-FEB-2010
08-10-09 TIME PLOTTED => 10:18

BORDER LAST REVISED 8/1/2008
RELATIVE BORDER SCALE IS IN INCHES 0 1 2 3
USERNAME => trmariak
DGN FILE => c07163ia009.dgn
CU 12235
EA 071631

NOTE:

1. FOR COMPLETE RIGHT OF WAY AND ACCURATE ACCESS DATA, SEE RIGHT OF WAY RECORD MAPS AT DISTRICT OFFICE.

Dist	COUNTY	ROUTE	POST MILES TOTAL PROJECT	SHEET No.	TOTAL SHEETS
12	Ora	22,405, 605	R0.3/R0.9, 22.3/24.0,3.0/R1.6	340	1929

REGISTERED CIVIL ENGINEER — 8/10/09 DATE

JENNIFER BROOKE RIVERA No. C70332 Exp. 09/30/10 CIVIL — REGISTERED PROFESSIONAL ENGINEER — STATE OF CALIFORNIA

2-1-10
PLANS APPROVAL DATE

THE STATE OF CALIFORNIA OR ITS OFFICERS OR AGENTS SHALL NOT BE RESPONSIBLE FOR THE ACCURACY OR COMPLETENESS OF ELECTRONIC COPIES OF THIS PLAN SHEET.

AECOM
999 TOWN & COUNTRY RD
ORANGE, CA 92868

ORANGE COUNTY
TRANSPORTATION AUTHORITY
550 S. MAIN STREET
ORANGE, CA 92863-1584

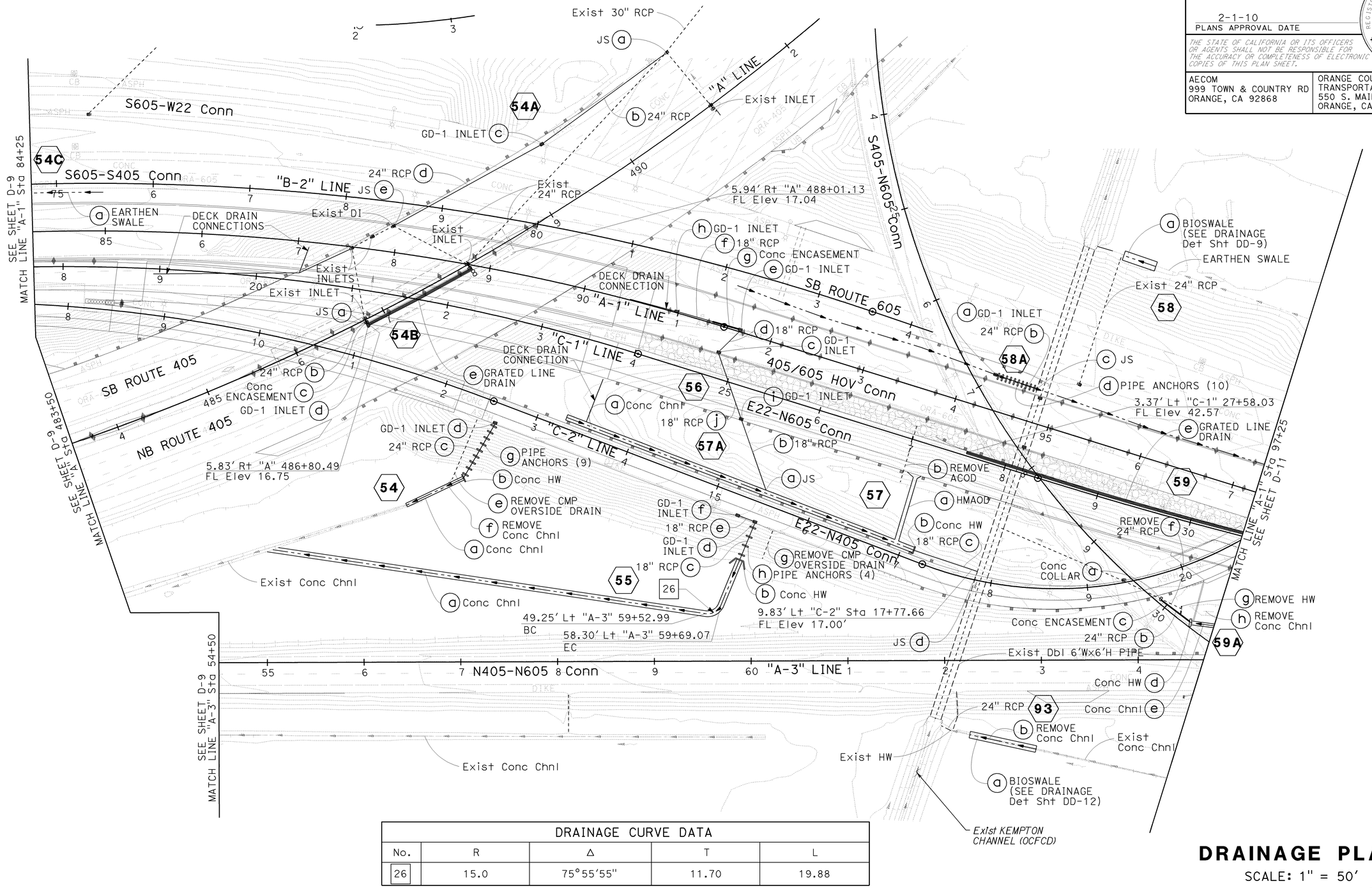

DRAINAGE CURVE DATA				
No.	R	Δ	T	L
26	15.0	75°55'55"	11.70	19.88

THIS PLAN ACCURATE FOR DRAINAGE WORK ONLY

DRAINAGE PLAN

SCALE: 1" = 50'

D-10

STATE OF CALIFORNIA - DEPARTMENT OF TRANSPORTATION
CONSULTANT FUNCTIONAL SUPERVISOR: ANDRZEJ NOWAK
CALCULATED-DESIGNED BY: RASHOD GIBSON
CHECKED BY: BROOKE RIVERA
REVISED BY: DUC TRAN
DATE REVISED: 8/10/09
LAST REVISION DATE PLOTTED => 03-FEB-2010
TIME PLOTTED => 10:18
08-10-09

BORDER LAST REVISED 8/1/2008
RELATIVE BORDER SCALE IS IN INCHES 0 1 2 3
USERNAME => trmariak
DGN FILE => c07163ia010.dgn
CU 12235
EA 071631

Dist	COUNTY	ROUTE	POST MILES TOTAL PROJECT	SHEET No.	TOTAL SHEETS
12	Ora	22,405, 605	R0.3/R0.9, 22.3/24.0,3.0/R1.6	341	1929

8/10/09
REGISTERED CIVIL ENGINEER DATE

JENNIFER BROOKE RIVERA
No. C70332
Exp. 09/30/10
CIVIL
REGISTERED PROFESSIONAL ENGINEER
STATE OF CALIFORNIA

2-1-10
PLANS APPROVAL DATE

THE STATE OF CALIFORNIA OR ITS OFFICERS OR AGENTS SHALL NOT BE RESPONSIBLE FOR THE ACCURACY OR COMPLETENESS OF ELECTRONIC COPIES OF THIS PLAN SHEET.

AECOM
999 TOWN & COUNTRY RD
ORANGE, CA 92868

ORANGE COUNTY
TRANSPORTATION AUTHORITY
550 S. MAIN STREET
ORANGE, CA 92863-1584

NOTE:

1. FOR COMPLETE RIGHT OF WAY AND ACCURATE ACCESS DATA, SEE RIGHT OF WAY RECORD MAPS AT DISTRICT OFFICE.

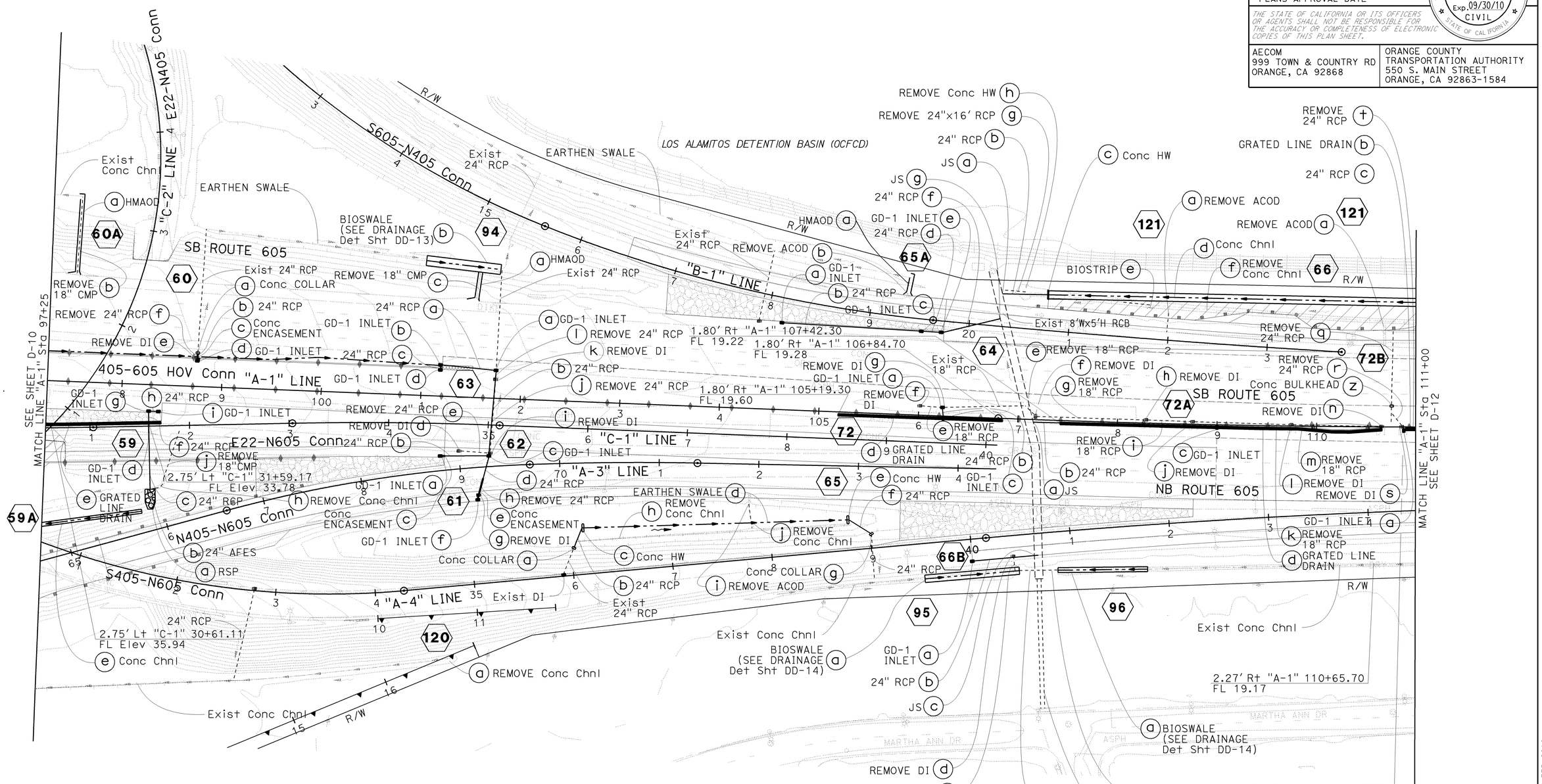

DRAINAGE PLAN

SCALE: 1" = 50'

D-11

THIS PLAN ACCURATE FOR DRAINAGE WORK ONLY

STATE OF CALIFORNIA - DEPARTMENT OF TRANSPORTATION
CONSULTANT FUNCTIONAL SUPERVISOR: ANDRZEJ NOWAK
CALCULATED-DESIGNED BY: RASHOD GIBSON
CHECKED BY: BROOKE RIVERA
REVISED BY: DUC TRAN
DATE REVISED: 8/10/09

LAST REVISION | DATE PLOTTED => 03-FEB-2010
08-10-09 | TIME PLOTTED => 10:18

BORDER LAST REVISED 8/1/2008
RELATIVE BORDER SCALE IS IN INCHES 0 1 2 3
USERNAME => trmariak
DGN FILE => c07163ia011.dgn
CU 12235
EA 071631

Dist	COUNTY	ROUTE	POST MILES TOTAL PROJECT	SHEET No.	TOTAL SHEETS
12	Ora	22,405, 605	R0.3/R0.9, 22.3/24.0,3.0/R1.6	342	1929

REGISTERED CIVIL ENGINEER — 8/10/09 DATE

JENNIFER BROOKE RIVERA No. C70332 Exp.09/30/10 CIVIL — REGISTERED PROFESSIONAL ENGINEER — STATE OF CALIFORNIA

2-1-10
PLANS APPROVAL DATE

THE STATE OF CALIFORNIA OR ITS OFFICERS OR AGENTS SHALL NOT BE RESPONSIBLE FOR THE ACCURACY OR COMPLETENESS OF ELECTRONIC COPIES OF THIS PLAN SHEET.

AECOM
999 TOWN & COUNTRY RD
ORANGE, CA 92868

ORANGE COUNTY TRANSPORTATION AUTHORITY
550 S. MAIN STREET
ORANGE, CA 92863-1584

DRAINAGE CURVE DATA				
NO	R	Δ	T	L
27	1000.0	3°56'48"	34.45	68.88

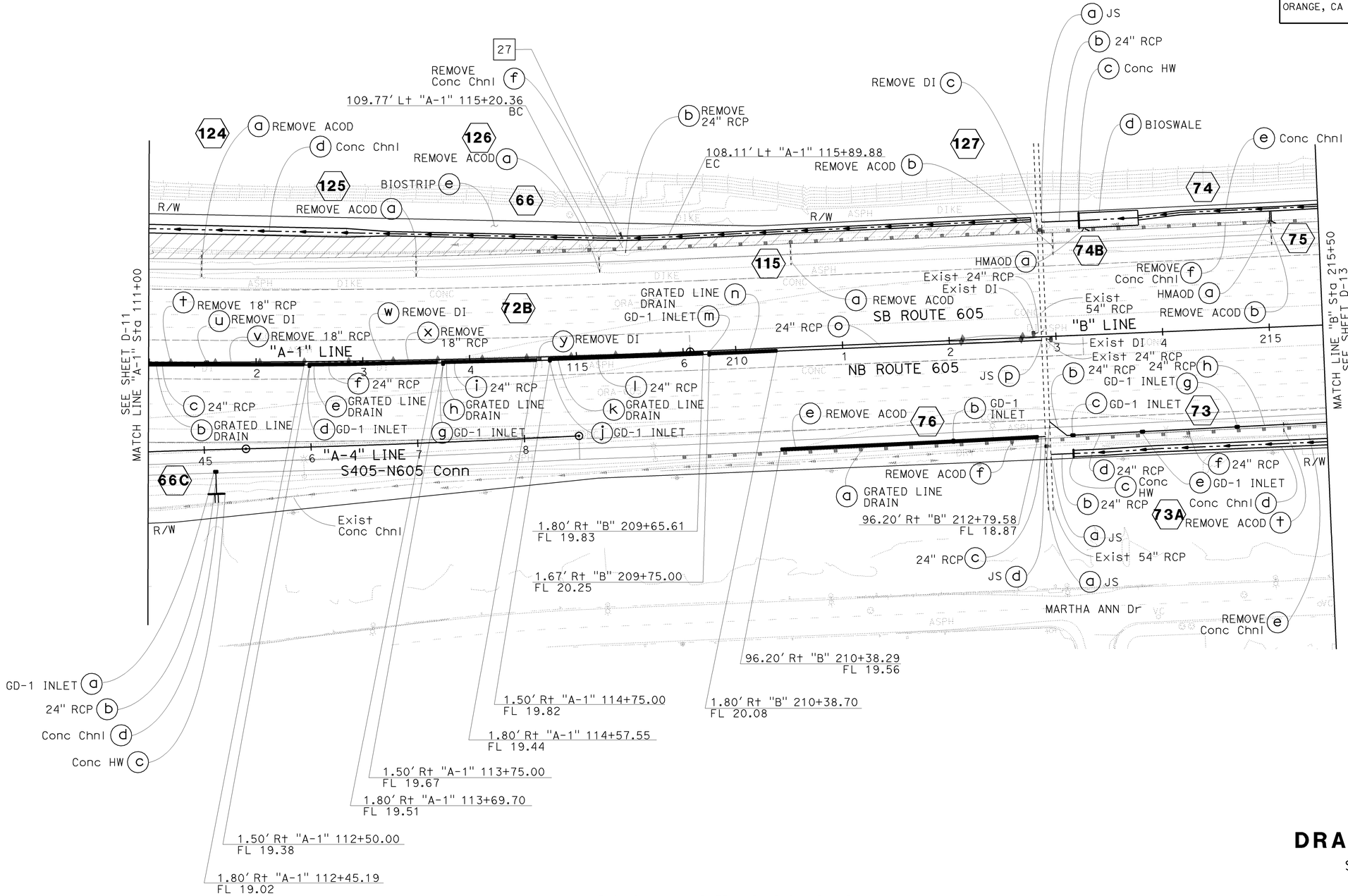

DRAINAGE PLAN

SCALE: 1" = 50'

D-12

THIS PLAN ACCURATE FOR DRAINAGE WORK ONLY

STATE OF CALIFORNIA - DEPARTMENT OF TRANSPORTATION — Caltrans

CONSULTANT FUNCTIONAL SUPERVISOR: ANDRZEJ NOWAK

CALCULATED-DESIGNED BY: RASHOD GIBSON

CHECKED BY: BROOKE RIVERA

REVISED BY: DUC TRAN — DATE REVISED: 8/10/09

LAST REVISION DATE PLOTTED => 03-FEB-2010
08-10-09 TIME PLOTTED => 10:18

BORDER LAST REVISED 8/1/2008 — RELATIVE BORDER SCALE IS IN INCHES 0 1 2 3 — USERNAME => trmariak — DGN FILE => c07163ia012.dgn — CU 12235 — EA 071631

NOTE:

1. FOR COMPLETE RIGHT OF WAY AND ACCURATE ACCESS DATA, SEE RIGHT OF WAY RECORD MAPS AT DISTRICT OFFICE.

Dist	COUNTY	ROUTE	POST MILES TOTAL PROJECT	SHEET No.	TOTAL SHEETS
12	Ora	22,405, 605	R0.3/R0.9, 22.3/24.0,3.0/R1.6	343	1929

REGISTERED CIVIL ENGINEER — DATE 8/10/09

JENNIFER BROOKE RIVERA No. C70332 Exp.09/30/10 CIVIL — REGISTERED PROFESSIONAL ENGINEER — STATE OF CALIFORNIA

2-1-10
PLANS APPROVAL DATE

THE STATE OF CALIFORNIA OR ITS OFFICERS OR AGENTS SHALL NOT BE RESPONSIBLE FOR THE ACCURACY OR COMPLETENESS OF ELECTRONIC COPIES OF THIS PLAN SHEET.

AECOM
999 TOWN & COUNTRY RD
ORANGE, CA 92868

ORANGE COUNTY
TRANSPORTATION AUTHORITY
550 S. MAIN STREET
ORANGE, CA 92863-1584

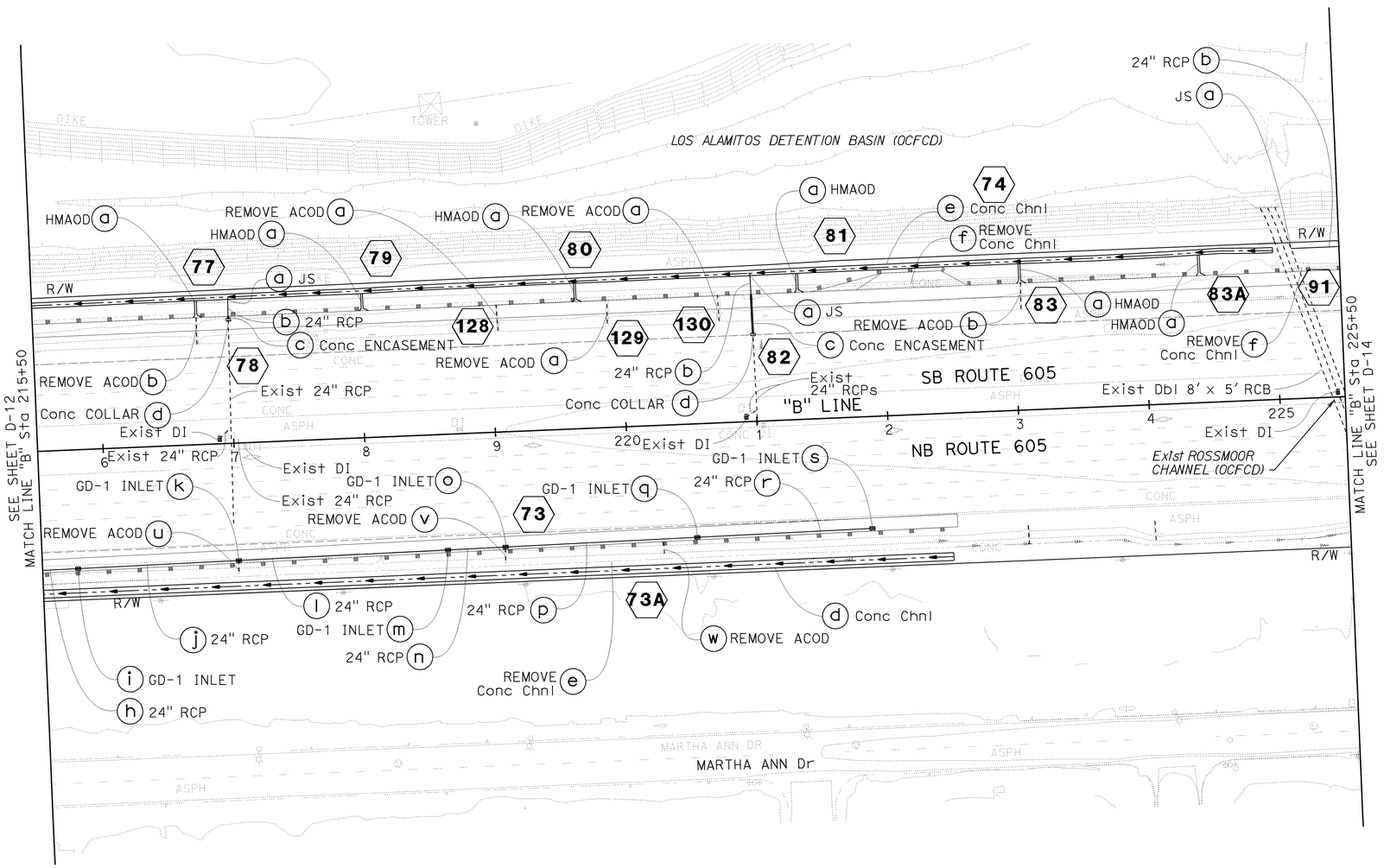

DRAINAGE PLAN

SCALE: 1" = 50'

D-13

THIS PLAN ACCURATE FOR DRAINAGE WORK ONLY

STATE OF CALIFORNIA - DEPARTMENT OF TRANSPORTATION
CONSULTANT FUNCTIONAL SUPERVISOR: ANDRZEJ NOWAK
CALCULATED-DESIGNED BY: RASHOD GIBSON
CHECKED BY: BROOKE RIVERA
REVISED BY: DUC TRAN
DATE REVISED: 8/10/09

LAST REVISION | DATE PLOTTED => 03-FEB-2010 | TIME PLOTTED => 10:18 | 08-10-09

BORDER LAST REVISED 8/1/2008 | RELATIVE BORDER SCALE IS IN INCHES 0 1 2 3 | USERNAME => trmariak | DGN FILE => c07163ia013.dgn | CU 12235 | EA 071631

Dist	COUNTY	ROUTE	POST MILES TOTAL PROJECT	SHEET No.	TOTAL SHEETS
12	Ora	22,405, 605	R0.3/R0.9, 22.3/24.0,3.0/R1.6	344	1929

REGISTERED CIVIL ENGINEER 8/10/09 DATE

2-1-10
PLANS APPROVAL DATE

REGISTERED PROFESSIONAL ENGINEER JENNIFER BROOKE RIVERA No. C70332 Exp. 09/30/10 CIVIL STATE OF CALIFORNIA

THE STATE OF CALIFORNIA OR ITS OFFICERS OR AGENTS SHALL NOT BE RESPONSIBLE FOR THE ACCURACY OR COMPLETENESS OF ELECTRONIC COPIES OF THIS PLAN SHEET.

AECOM
999 TOWN & COUNTRY RD
ORANGE, CA 92868

ORANGE COUNTY
TRANSPORTATION AUTHORITY
550 S. MAIN STREET
ORANGE, CA 92863-1584

NOTE:

1. FOR COMPLETE RIGHT OF WAY AND ACCURATE ACCESS DATA, SEE RIGHT OF WAY RECORD MAPS AT DISTRICT OFFICE.

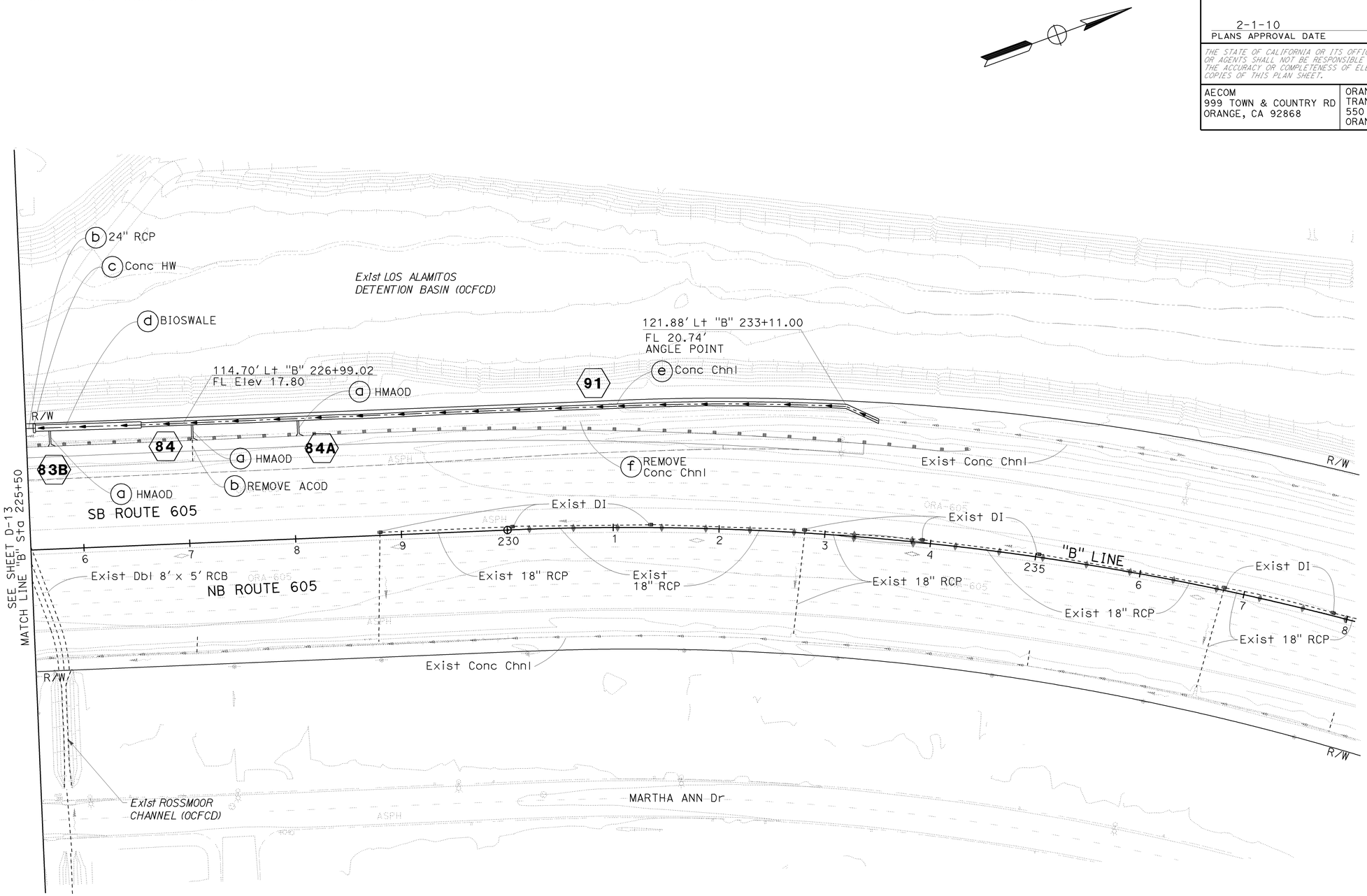

DRAINAGE PLAN

SCALE: 1" = 50'

D-14

THIS PLAN ACCURATE FOR DRAINAGE WORK ONLY

STATE OF CALIFORNIA - DEPARTMENT OF TRANSPORTATION
Caltrans

CONSULTANT FUNCTIONAL SUPERVISOR: ANDRZEJ NOWAK
CALCULATED-DESIGNED BY: RASHOD GIBSON
CHECKED BY: BROOKE RIVERA
REVISED BY: DUC TRAN
DATE REVISED: 8/10/09

LAST REVISION 08-10-09
DATE PLOTTED => 03-FEB-2010
TIME PLOTTED => 10:25

NOTE:

1. FOR COMPLETE RIGHT OF WAY AND ACCURATE ACCESS DATA, SEE RIGHT OF WAY RECORD MAPS AT DISTRICT OFFICE.

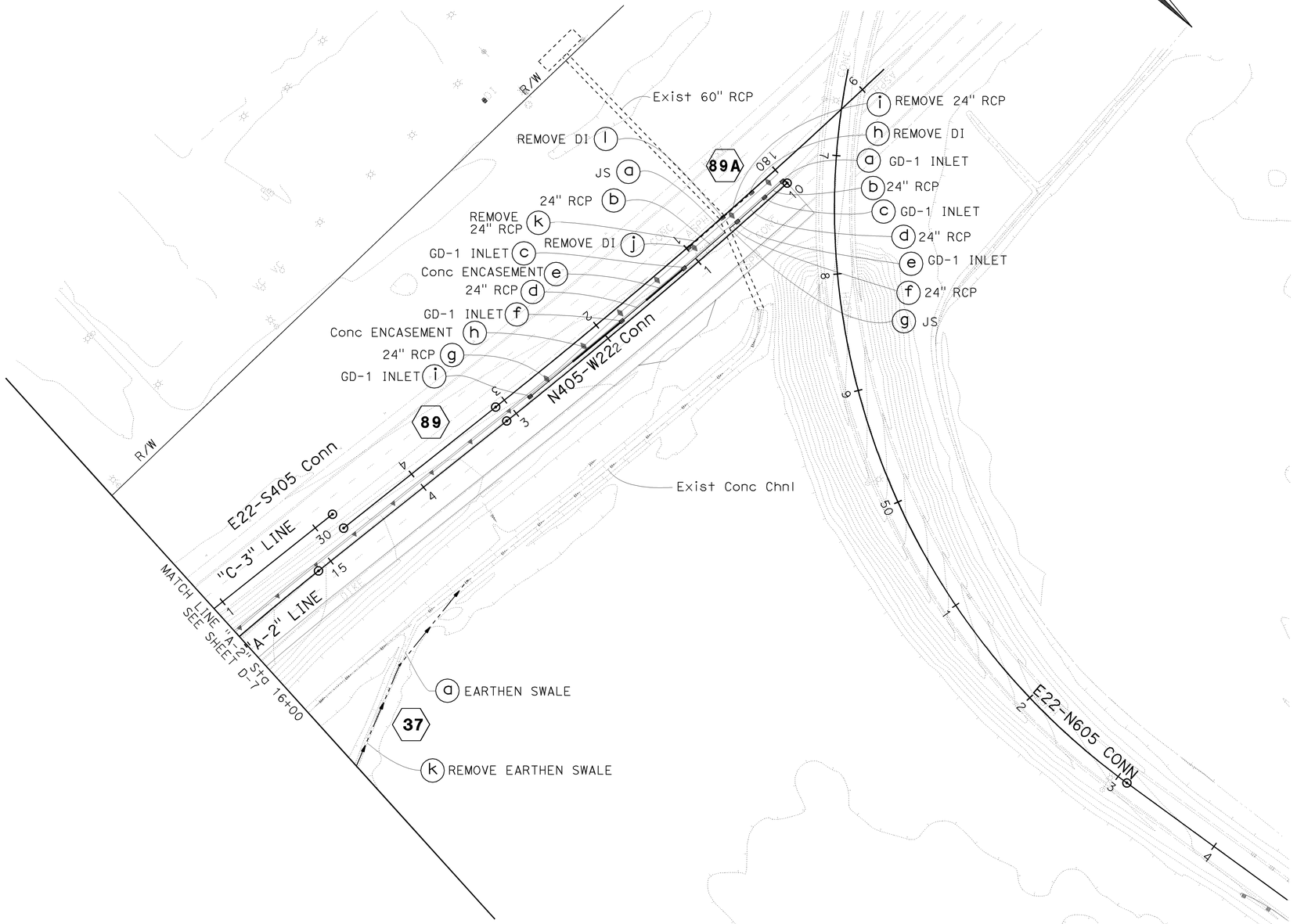

Dist	COUNTY	ROUTE	POST MILES TOTAL PROJECT	SHEET No.	TOTAL SHEETS
12	Ora	22,405, 605	R0.3/R0.9, 22.3/24.0,3.0/R1.6	345	1929

8/10/09
REGISTERED CIVIL ENGINEER DATE

JENNIFER BROOKE RIVERA
No. C70332
Exp. 09/30/10
CIVIL
REGISTERED PROFESSIONAL ENGINEER
STATE OF CALIFORNIA

2-1-10
PLANS APPROVAL DATE

THE STATE OF CALIFORNIA OR ITS OFFICERS OR AGENTS SHALL NOT BE RESPONSIBLE FOR THE ACCURACY OR COMPLETENESS OF ELECTRONIC COPIES OF THIS PLAN SHEET.

AECOM
999 TOWN & COUNTRY RD
ORANGE, CA 92868

ORANGE COUNTY
TRANSPORTATION AUTHORITY
550 S. MAIN STREET
ORANGE, CA 92863-1584

DRAINAGE PLAN

SCALE: 1" = 50'

D-15

THIS PLAN ACCURATE FOR DRAINAGE WORK ONLY

STATE OF CALIFORNIA - DEPARTMENT OF TRANSPORTATION
Caltrans

CONSULTANT FUNCTIONAL SUPERVISOR: ANDRZEJ NOWAK

CALCULATED-DESIGNED BY	CHECKED BY	REVISED BY	DATE REVISED
RASHOD GIBSON	BROOKE RIVERA	DUC TRAN	8/10/09

LAST REVISION DATE PLOTTED => 03-FEB-2010
08-10-09 TIME PLOTTED => 10:25

BORDER LAST REVISED 8/1/2008 | RELATIVE BORDER SCALE IS IN INCHES 0 1 2 3 | USERNAME => trmariak | DGN FILE => c071631ia015.dgn | CU 12235 | EA 071631

NOTE:

1. FOR COMPLETE RIGHT OF WAY AND ACCURATE ACCESS DATA, SEE RIGHT OF WAY RECORD MAPS AT DISTRICT OFFICE.

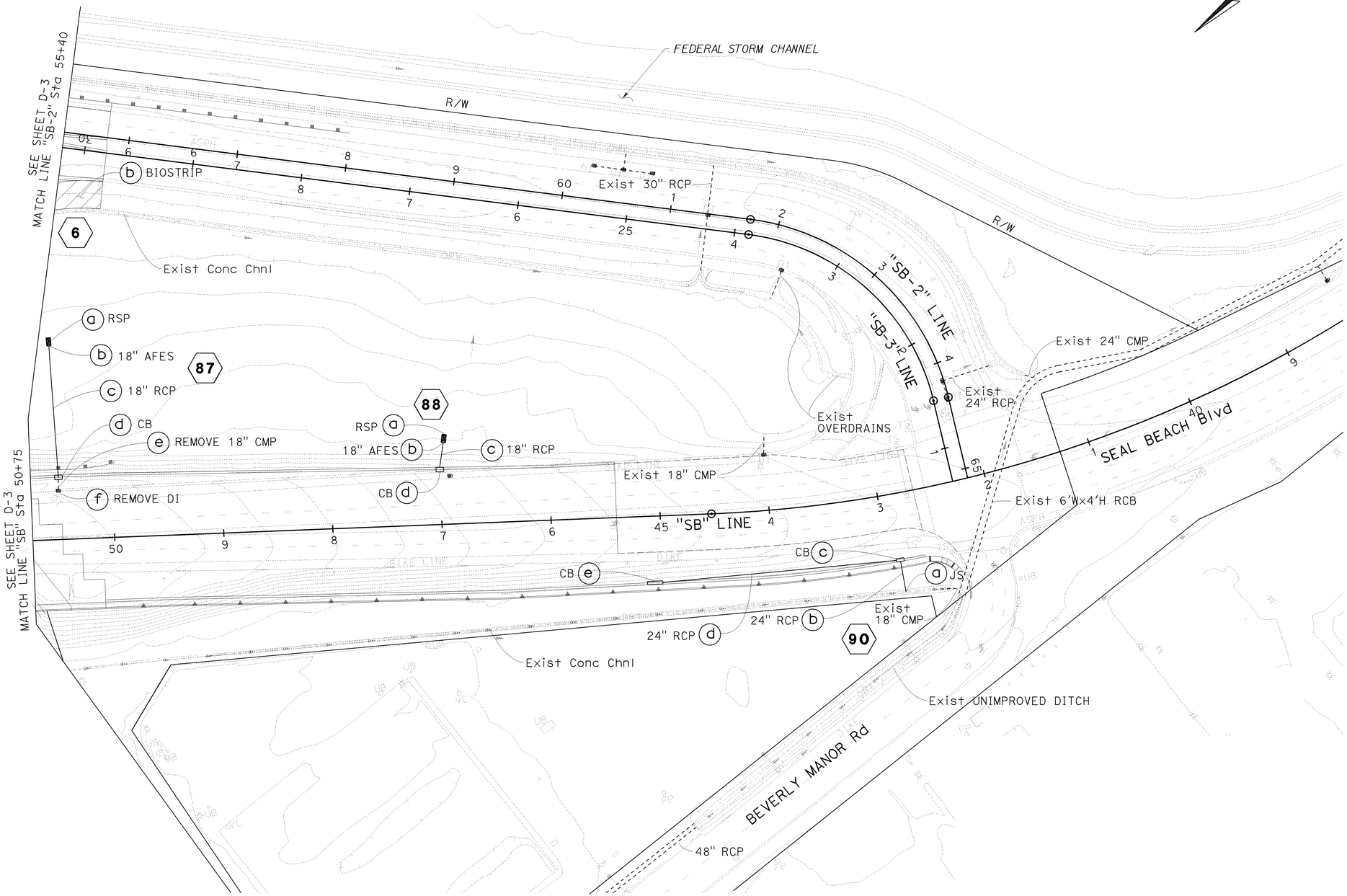

Dist	COUNTY	ROUTE	POST MILES TOTAL PROJECT	SHEET No.	TOTAL SHEETS
12	Ora	22,405, 605	R0.3/R0.9, 22.3/24.0,3.0/R1.6	346	1929

REGISTERED CIVIL ENGINEER — 8/10/09 DATE

JENNIFER BROOKE RIVERA No. C70332 Exp. 09/30/10 CIVIL — REGISTERED PROFESSIONAL ENGINEER — STATE OF CALIFORNIA

2-1-10
PLANS APPROVAL DATE

THE STATE OF CALIFORNIA OR ITS OFFICERS OR AGENTS SHALL NOT BE RESPONSIBLE FOR THE ACCURACY OR COMPLETENESS OF ELECTRONIC COPIES OF THIS PLAN SHEET.

AECOM
999 TOWN & COUNTRY RD
ORANGE, CA 92868

ORANGE COUNTY
TRANSPORTATION AUTHORITY
550 S. MAIN STREET
ORANGE, CA 92863-1584

DRAINAGE PLAN

SCALE: 1" = 50'

D-16

THIS PLAN ACCURATE FOR DRAINAGE WORK ONLY

REVISED BY	DATE REVISED
DUC TRAN	8/10/09

CALCULATED-DESIGNED BY: RASHOD GIBSON
CHECKED BY: BROOKE RIVERA

CONSULTANT FUNCTIONAL SUPERVISOR: ANDRZEJ NOWAK

STATE OF CALIFORNIA - DEPARTMENT OF TRANSPORTATION
Caltrans

LAST REVISION DATE PLOTTED => 03-FEB-2010
LAST REVISION TIME PLOTTED => 10:18
08-10-09

BORDER LAST REVISED 8/1/2008

RELATIVE BORDER SCALE IS IN INCHES 0 1 2 3

USERNAME => trmariak
DGN FILE => c07163ia016.dgn

CU 12235

EA 071631

Dist	COUNTY	ROUTE	POST MILES TOTAL PROJECT	SHEET No.	TOTAL SHEETS
12	Ora	22,405, 605	R0.3/R0.9, 22.3/24.0,3.0/R1.6	347	1929

REGISTERED CIVIL ENGINEER — DATE 8/10/09

2-1-10
PLANS APPROVAL DATE

REGISTERED PROFESSIONAL ENGINEER
JENNIFER BROOKE RIVERA
No. C70332
Exp.09/30/10
CIVIL
STATE OF CALIFORNIA

THE STATE OF CALIFORNIA OR ITS OFFICERS OR AGENTS SHALL NOT BE RESPONSIBLE FOR THE ACCURACY OR COMPLETENESS OF ELECTRONIC COPIES OF THIS PLAN SHEET.

AECOM
999 TOWN & COUNTRY RD
ORANGE, CA 92868

ORANGE COUNTY
TRANSPORTATION AUTHORITY
550 S. MAIN STREET
ORANGE, CA 92863-1584

ABBREVIATIONS:

HP HIGH PRESSURE GAS LINE

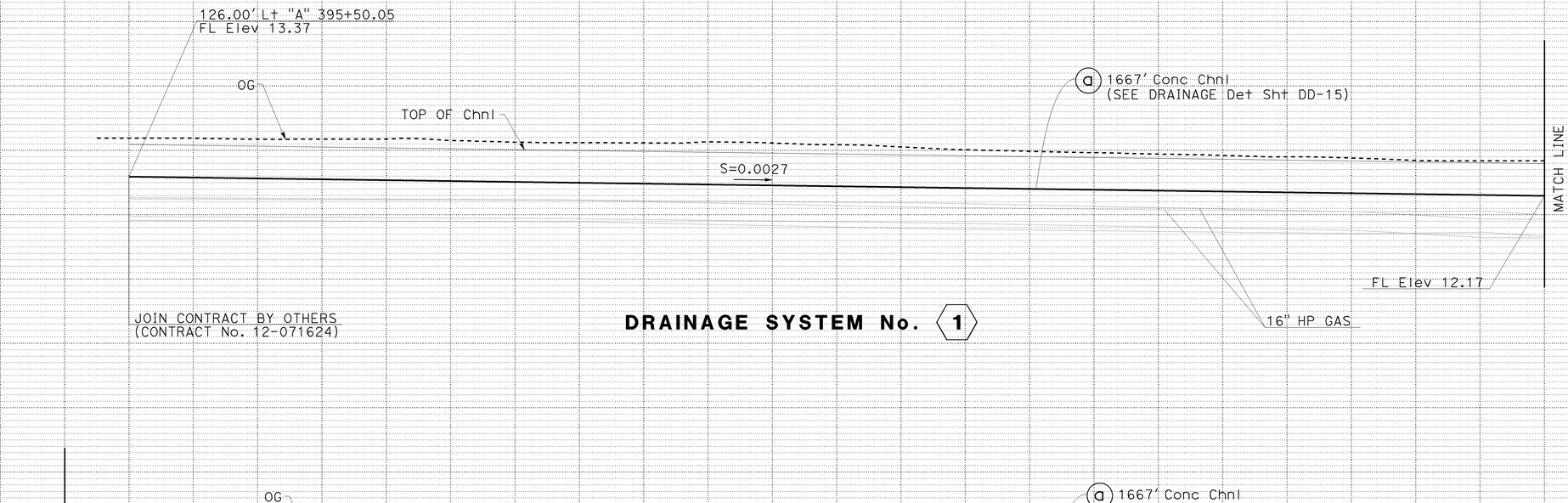

DRAINAGE PROFILE

SCALE: Horiz 1" = 20'
Vert 1" = 4'

DP-1

REVISED BY: DUC TRAN — DATE REVISED: 8/10/09
CALCULATED-DESIGNED BY: RASHOD GIBSON
CHECKED BY: BROOKE RIVERA
CONSULTANT FUNCTIONAL SUPERVISOR: ANDRZEJ NOWAK
STATE OF CALIFORNIA - DEPARTMENT OF TRANSPORTATION
Caltrans

LAST REVISION: DATE PLOTTED => 03-FEB-2010 TIME PLOTTED => 10:09
08-10-09

BORDER LAST REVISED 8/1/2008 — RELATIVE BORDER SCALE IS IN INCHES 0 1 2 3

USERNAME => trmartin
DGN FILE => c07163ib001.dgn

CU 12235 — EA 071631

Dist	COUNTY	ROUTE	POST MILES TOTAL PROJECT	SHEET No.	TOTAL SHEETS
12	Ora	22,405, 605	R0.3/R0.9, 22.3/24.0,3.0/R1.6	348	1929

REGISTERED CIVIL ENGINEER — DATE 12/22/09

JENNIFER BROOKE RIVERA No. C70332 Exp. 09/30/10 CIVIL — REGISTERED PROFESSIONAL ENGINEER — STATE OF CALIFORNIA

2-1-10
PLANS APPROVAL DATE

THE STATE OF CALIFORNIA OR ITS OFFICERS OR AGENTS SHALL NOT BE RESPONSIBLE FOR THE ACCURACY OR COMPLETENESS OF ELECTRONIC COPIES OF THIS PLAN SHEET.

AECOM
999 TOWN & COUNTRY RD
ORANGE, CA 92868

ORANGE COUNTY
TRANSPORTATION AUTHORITY
550 S. MAIN STREET
ORANGE, CA 92863-1584

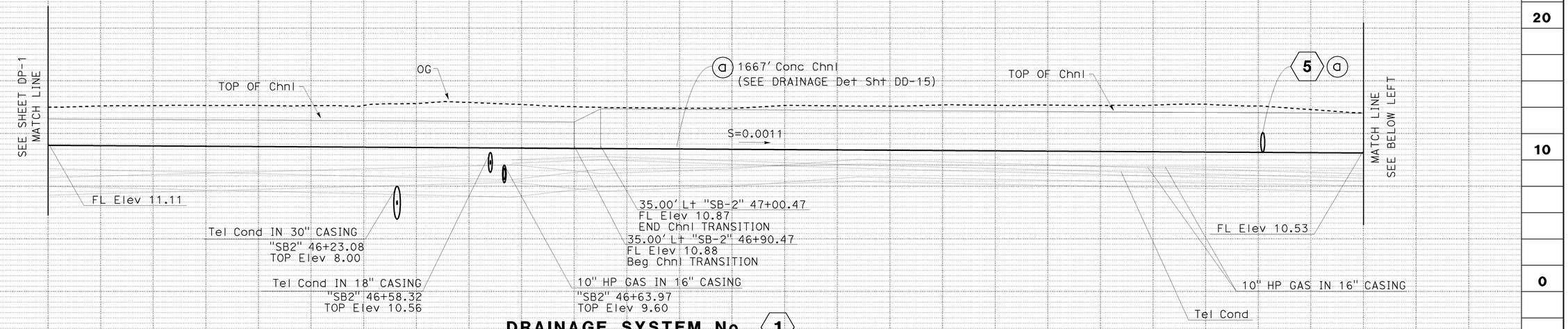

DRAINAGE SYSTEM No. 1

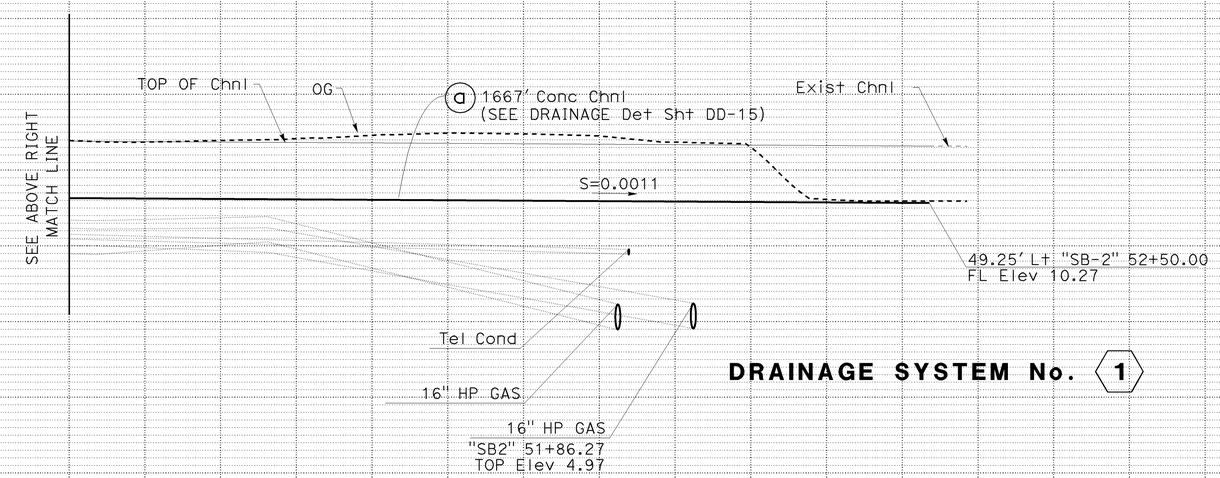

DRAINAGE SYSTEM No. 1

DRAINAGE PROFILE

SCALE: Horiz 1" = 20'
Vert 1" = 4'

DP-2

REVISED BY: DUC TRAN — DATE REVISED: 8/10/09
CALCULATED-DESIGNED BY: RASHOD GIBSON
CHECKED BY: BROOKE RIVERA
CONSULTANT FUNCTIONAL SUPERVISOR: ANDRZEJ NOWAK
STATE OF CALIFORNIA - DEPARTMENT OF TRANSPORTATION — Caltrans

LAST REVISION 08-10-09 — DATE PLOTTED => 03-FEB-2010 — TIME PLOTTED => 10:15

BORDER LAST REVISED 8/1/2008 — RELATIVE BORDER SCALE IS IN INCHES 0 1 2 3

USERNAME => trmartin
DGN FILE => c07163ib002.dgn

CU 12235 — EA 071631

Dist	COUNTY	ROUTE	POST MILES TOTAL PROJECT	SHEET No.	TOTAL SHEETS
12	Ora	22,405, 605	R0.3/R0.9, 22.3/24.0,3.0/R1.6	349	1929

REGISTERED CIVIL ENGINEER — 8/10/09 DATE

JENNIFER BROOKE RIVERA No. C70332 Exp.09/30/10 CIVIL — REGISTERED PROFESSIONAL ENGINEER — STATE OF CALIFORNIA

2-1-10
PLANS APPROVAL DATE

THE STATE OF CALIFORNIA OR ITS OFFICERS OR AGENTS SHALL NOT BE RESPONSIBLE FOR THE ACCURACY OR COMPLETENESS OF ELECTRONIC COPIES OF THIS PLAN SHEET.

AECOM
999 TOWN & COUNTRY RD
ORANGE, CA 92868

ORANGE COUNTY TRANSPORTATION AUTHORITY
550 S. MAIN STREET
ORANGE, CA 92863-1584

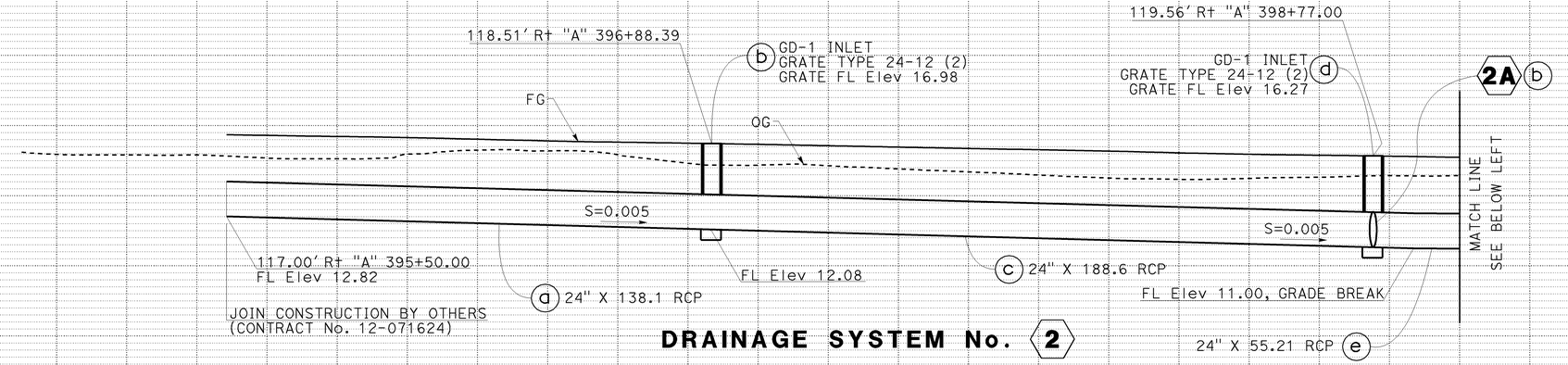

DRAINAGE SYSTEM No. 2

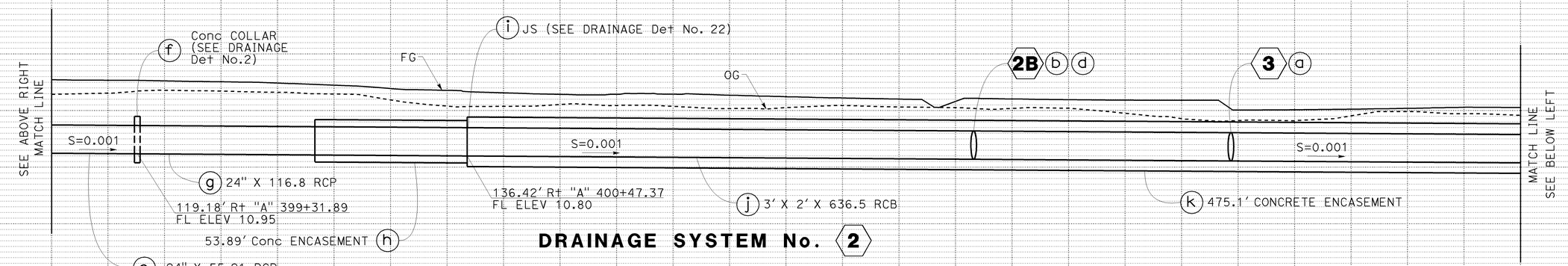

DRAINAGE SYSTEM No. 2

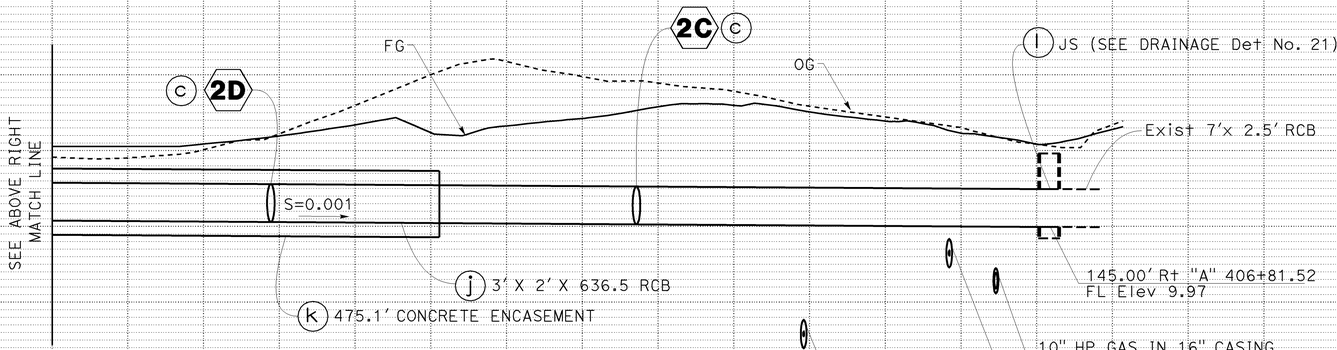

DRAINAGE SYSTEM No. 2

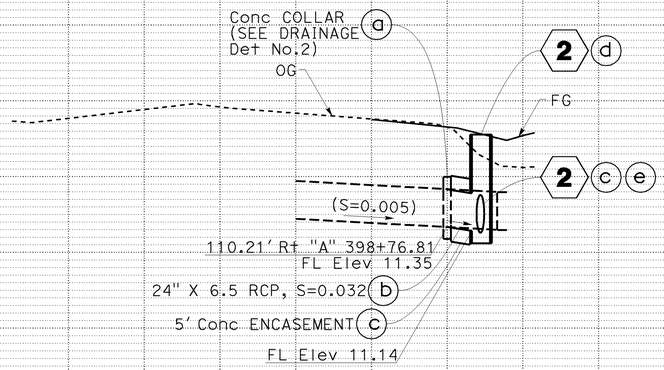

DRAINAGE SYSTEM No. 2A

DRAINAGE PROFILE

SCALE: Horiz 1" = 20'
Vert 1" = 4'

DP-3

REVISED BY: DUC TRAN — DATE REVISED: 8/10/09
CALCULATED-DESIGNED BY: RASHOD GIBSON
CHECKED BY: BROOKE RIVERA
CONSULTANT FUNCTIONAL SUPERVISOR: ANDRZEJ NOWAK
STATE OF CALIFORNIA - DEPARTMENT OF TRANSPORTATION
Gtrans

LAST REVISION: DATE PLOTTED => 03-FEB-2010 TIME PLOTTED => 10:09
08-10-09

BORDER LAST REVISED 8/1/2008 — RELATIVE BORDER SCALE IS IN INCHES 0 1 2 3 — USERNAME => trmartin DGN FILE => c07163ib003.dgn — CU 12235 — EA 071631

Dist	COUNTY	ROUTE	POST MILES TOTAL PROJECT	SHEET No.	TOTAL SHEETS
12	Ora	22,405, 605	R0.3/R0.9, 22.3/24.0,3.0/R1.6	350	1929

REGISTERED CIVIL ENGINEER — 8/10/09 DATE

JENNIFER BROOKE RIVERA No. C70332 Exp.09/30/10 CIVIL — REGISTERED PROFESSIONAL ENGINEER — STATE OF CALIFORNIA

2-1-10
PLANS APPROVAL DATE

THE STATE OF CALIFORNIA OR ITS OFFICERS OR AGENTS SHALL NOT BE RESPONSIBLE FOR THE ACCURACY OR COMPLETENESS OF ELECTRONIC COPIES OF THIS PLAN SHEET.

AECOM
999 TOWN & COUNTRY RD
ORANGE, CA 92868

ORANGE COUNTY TRANSPORTATION AUTHORITY
550 S. MAIN STREET
ORANGE, CA 92863-1584

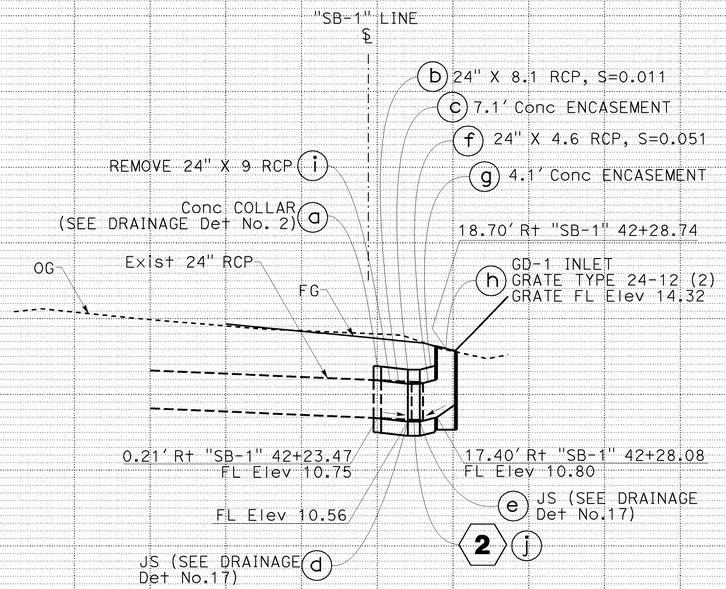

DRAINAGE SYSTEM No. 2B

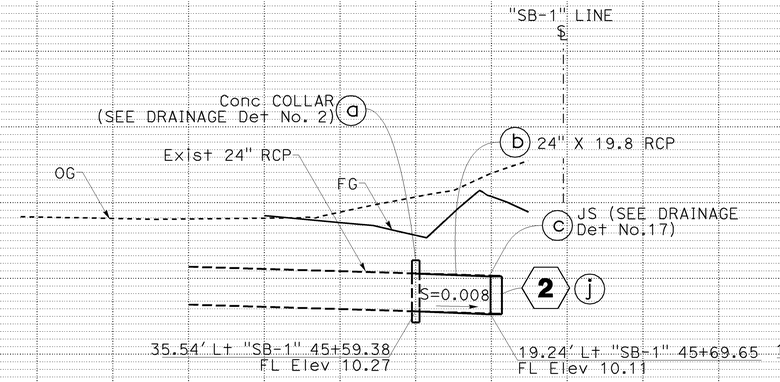

DRAINAGE SYSTEM No. 2C

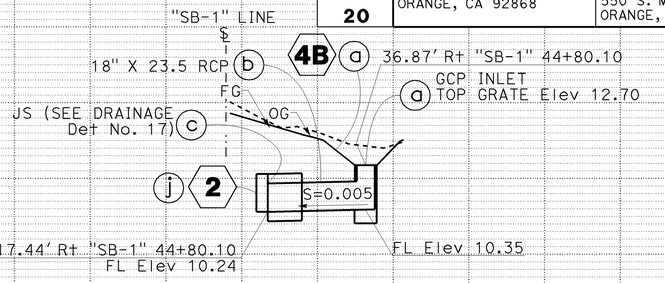

DRAINAGE SYSTEM No. 2D

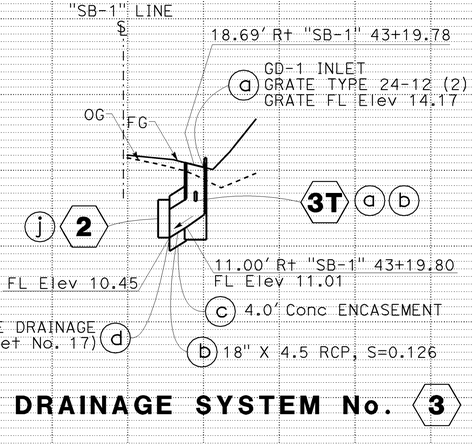

DRAINAGE SYSTEM No. 3

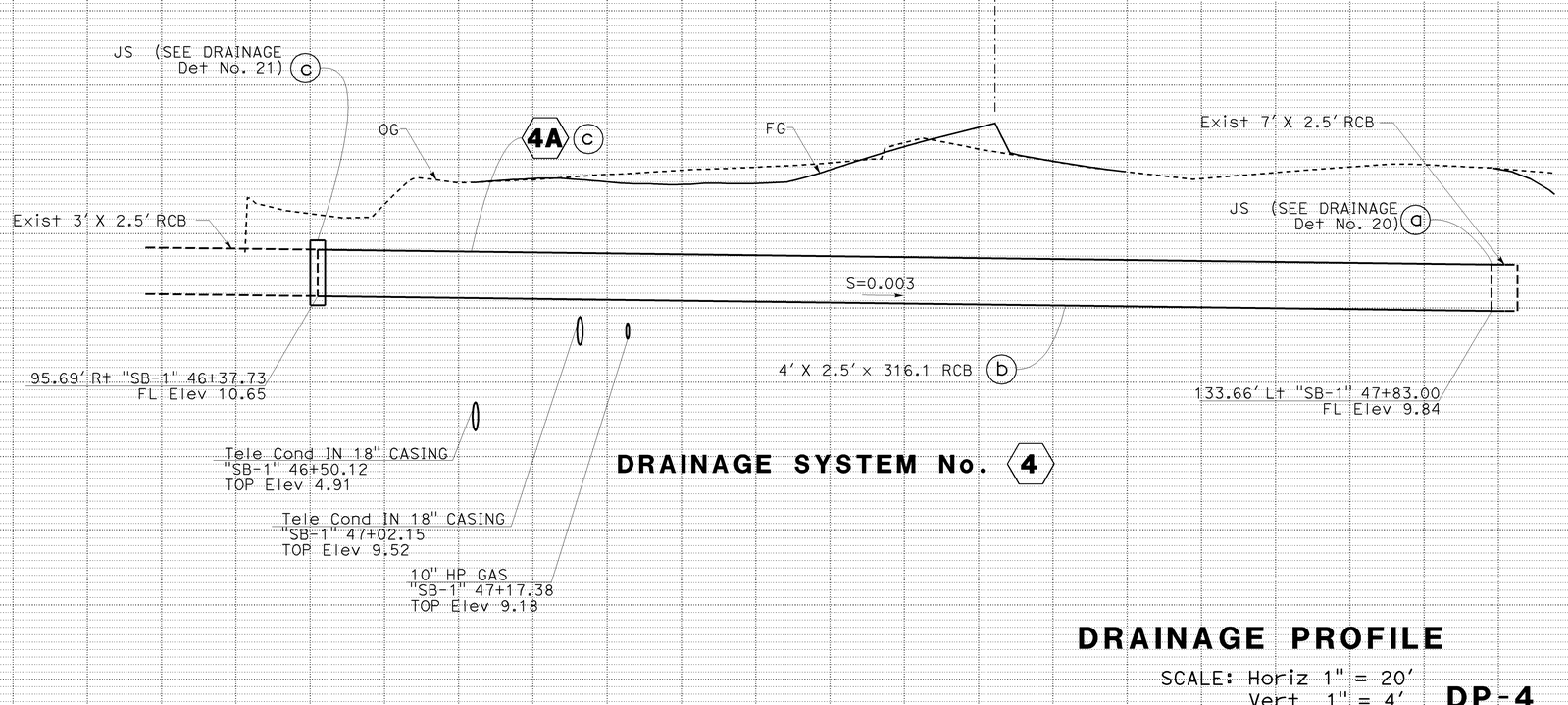

DRAINAGE SYSTEM No. 4

DRAINAGE PROFILE

SCALE: Horiz 1" = 20'
Vert 1" = 4'

DP-4

DUC TRAN — 8/10/09
REVISED BY — DATE REVISED
RASHOD GIBSON — BROOKE RIVERA
CALCULATED-DESIGNED BY — CHECKED BY
ANDRZEJ NOWAK — CONSULTANT FUNCTIONAL SUPERVISOR
STATE OF CALIFORNIA - DEPARTMENT OF TRANSPORTATION

LAST REVISION 08-10-09
DATE PLOTTED => 03-FEB-2010
TIME PLOTTED => 10:10

BORDER LAST REVISED 8/1/2008
RELATIVE BORDER SCALE IS IN INCHES 0 1 2 3
USERNAME => trmartin
DGN FILE => c07163ib004.dgn
CU 12235
EA 071631

Dist	COUNTY	ROUTE	POST MILES TOTAL PROJECT	SHEET No.	TOTAL SHEETS
12	Ora	22,405, 605	R0.3/R0.9, 22.3/24.0,3.0/R1.6	351	1929

REGISTERED CIVIL ENGINEER — 8/10/09 DATE

JENNIFER BROOKE RIVERA No. C70332 Exp.09/30/10 CIVIL — REGISTERED PROFESSIONAL ENGINEER — STATE OF CALIFORNIA

2-1-10
PLANS APPROVAL DATE

THE STATE OF CALIFORNIA OR ITS OFFICERS OR AGENTS SHALL NOT BE RESPONSIBLE FOR THE ACCURACY OR COMPLETENESS OF ELECTRONIC COPIES OF THIS PLAN SHEET.

AECOM
999 TOWN & COUNTRY RD
ORANGE, CA 92868

ORANGE COUNTY
TRANSPORTATION AUTHORITY
550 S. MAIN STREET
ORANGE, CA 92863-1584

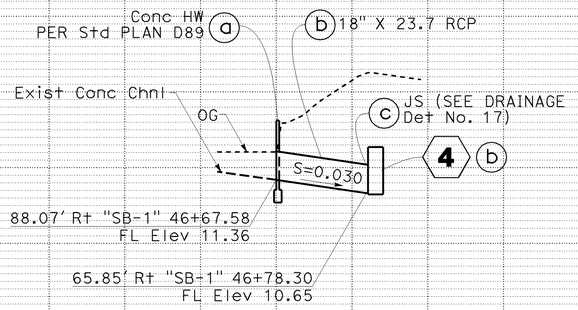

DRAINAGE SYSTEM No. 4A

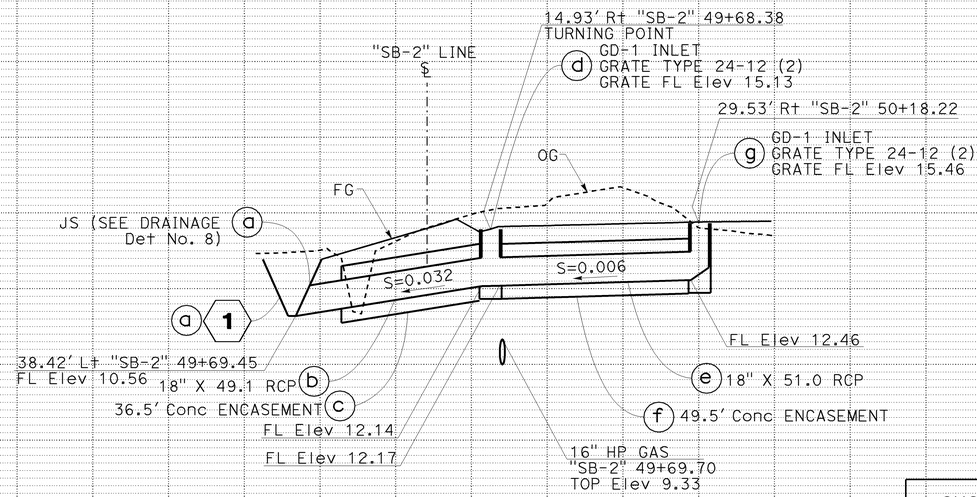

DRAINAGE SYSTEM No. 5

HMAOD TABLE

SYSTEM No.	INLET Elev	OUTLET Elev
4B	13.73	12.70

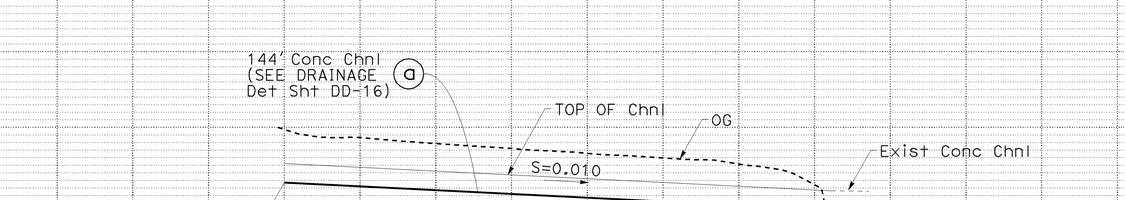

DRAINAGE SYSTEM No. 6

DRAINAGE PROFILE

SCALE: Horiz 1" = 20'
Vert 1" = 4'

DP-5

STATE OF CALIFORNIA - DEPARTMENT OF TRANSPORTATION
CONSULTANT FUNCTIONAL SUPERVISOR: ANDRZEJ NOWAK
CALCULATED-DESIGNED BY: RASHOD GIBSON
CHECKED BY: BROOKE RIVERA
REVISED BY: DUC TRAN
DATE REVISED: 8/10/09

LAST REVISION DATE PLOTTED => 03-FEB-2010
TIME PLOTTED => 10:22
08-10-09

Dist	COUNTY	ROUTE	POST MILES TOTAL PROJECT	SHEET No.	TOTAL SHEETS
12	Ora	22,405, 605	R0.3/R0.9, 22.3/24.0,3.0/R1.6	352	1929

REGISTERED CIVIL ENGINEER — 8/10/09 DATE

2-1-10
PLANS APPROVAL DATE

REGISTERED PROFESSIONAL ENGINEER — JENNIFER BROOKE RIVERA — No. C70332 — Exp. 09/30/10 — CIVIL — STATE OF CALIFORNIA

THE STATE OF CALIFORNIA OR ITS OFFICERS OR AGENTS SHALL NOT BE RESPONSIBLE FOR THE ACCURACY OR COMPLETENESS OF ELECTRONIC COPIES OF THIS PLAN SHEET.

AECOM
999 TOWN & COUNTRY RD
ORANGE, CA 92868

ORANGE COUNTY TRANSPORTATION AUTHORITY
550 S. MAIN STREET
ORANGE, CA 92863-1584

REVISED BY: DUC TRAN — DATE REVISED: 8/10/09
CALCULATED-DESIGNED BY: RASHOD GIBSON
CHECKED BY: BROOKE RIVERA
CONSULTANT FUNCTIONAL SUPERVISOR: ANDRZEJ NOWAK
STATE OF CALIFORNIA - DEPARTMENT OF TRANSPORTATION — Caltrans

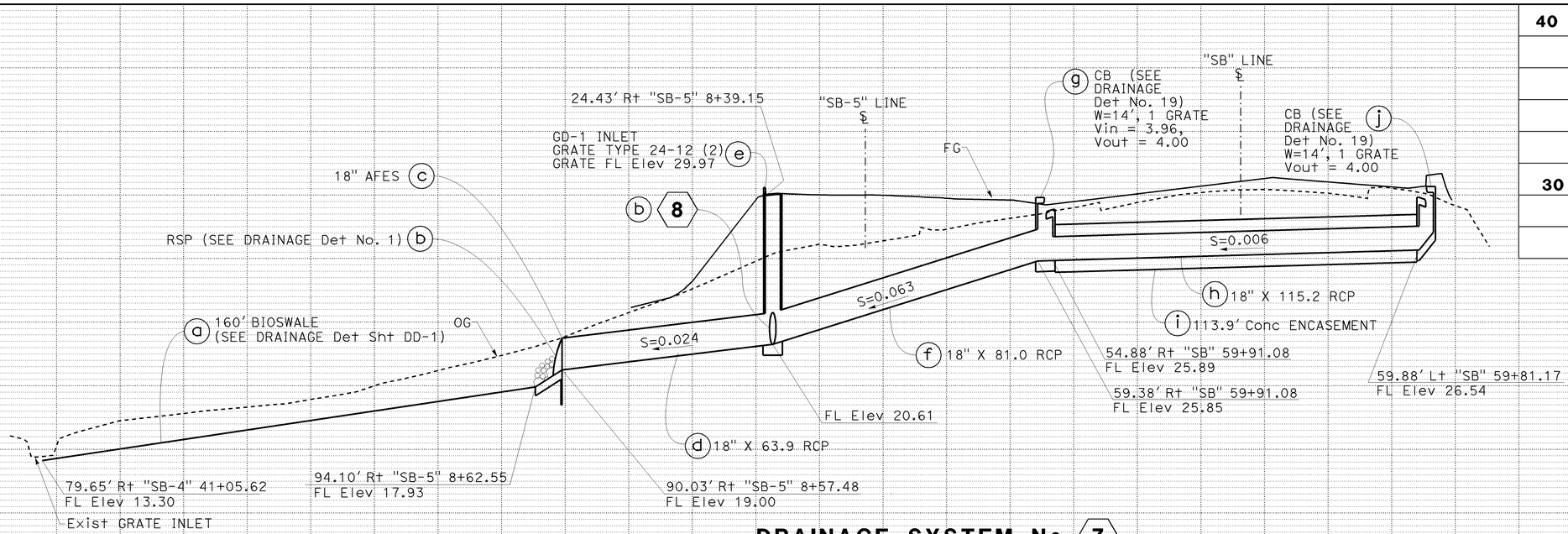

DRAINAGE SYSTEM No. 7

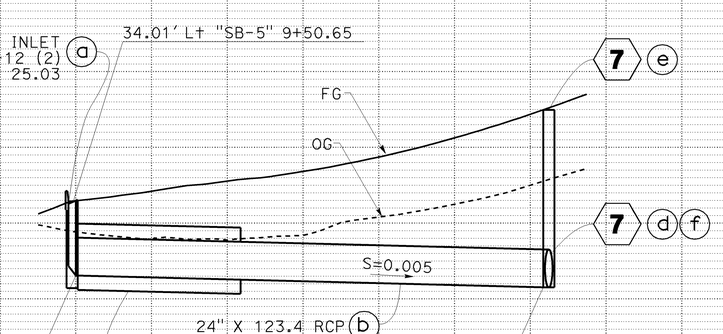

DRAINAGE SYSTEM No. 8

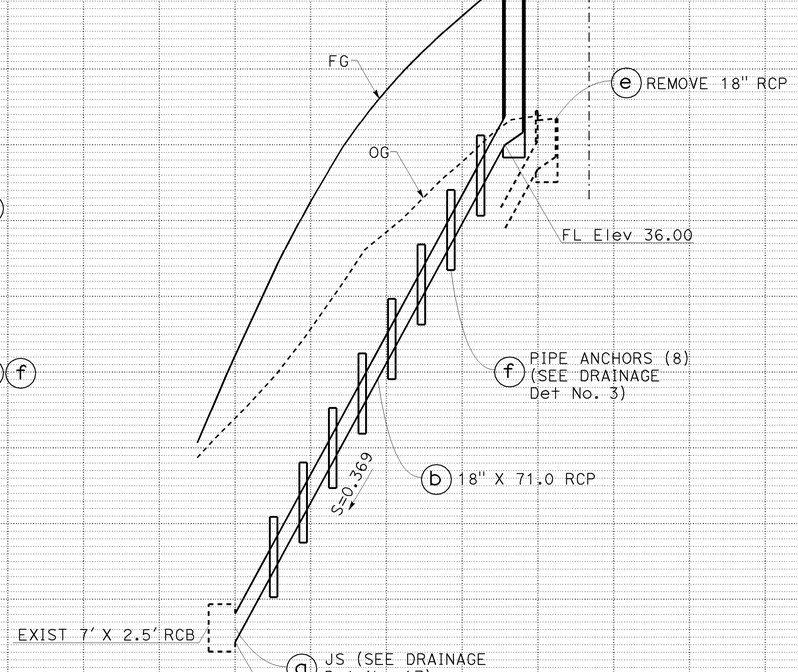

DRAINAGE SYSTEM No. 9

DRAINAGE PROFILE

SCALE: Horiz 1" = 20'
Vert 1" = 4'

DP-6

LAST REVISION: DATE PLOTTED => 03-FEB-2010 — TIME PLOTTED => 10:10 — 08-10-09

BORDER LAST REVISED 8/1/2008 — RELATIVE BORDER SCALE IS IN INCHES (0 1 2 3) — USERNAME => trmartin — DGN FILE => c07163ib006.dgn — CU 12235 — EA 071631

Dist	COUNTY	ROUTE	POST MILES TOTAL PROJECT	SHEET No.	TOTAL SHEETS
12	Ora	22,405, 605	R0.3/R0.9, 22.3/24.0,3.0/R1.6	353	1929

REGISTERED CIVIL ENGINEER — 8/10/09 DATE

JENNIFER BROOKE RIVERA No. C70332 Exp.09/30/10 CIVIL — REGISTERED PROFESSIONAL ENGINEER — STATE OF CALIFORNIA

2-1-10
PLANS APPROVAL DATE

THE STATE OF CALIFORNIA OR ITS OFFICERS OR AGENTS SHALL NOT BE RESPONSIBLE FOR THE ACCURACY OR COMPLETENESS OF ELECTRONIC COPIES OF THIS PLAN SHEET.

AECOM
999 TOWN & COUNTRY RD
ORANGE, CA 92868

ORANGE COUNTY
TRANSPORTATION AUTHORITY
550 S. MAIN STREET
ORANGE, CA 92863-1584

HMAOD TABLE

SYSTEM No.	INLET Elev	OUTLET Elev
11	14.90	10.00
13	20.81	12.82

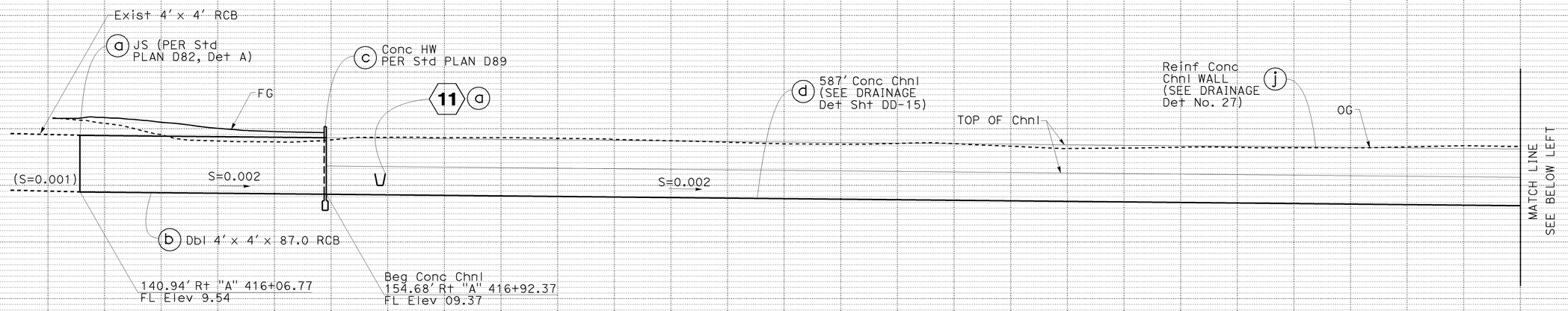

DRAINAGE SYSTEM No. 10

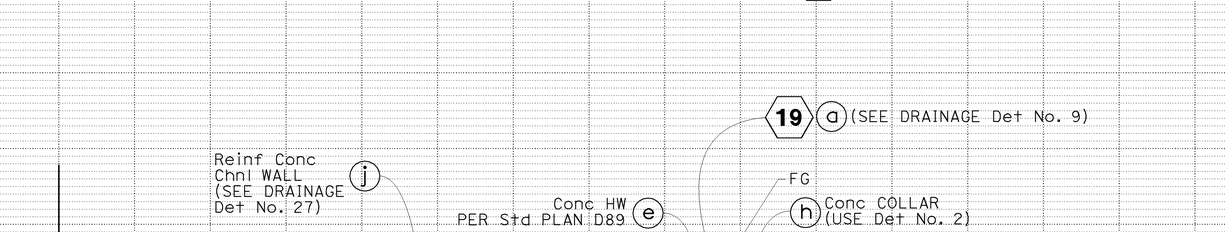

DRAINAGE SYSTEM No. 10

DRAINAGE PROFILE

SCALE: Horiz 1" = 20'
Vert 1" = 4'

DP-7

STATE OF CALIFORNIA - DEPARTMENT OF TRANSPORTATION — Caltrans
CONSULTANT FUNCTIONAL SUPERVISOR: ANDRZEJ NOWAK
CALCULATED-DESIGNED BY: RASHOD GIBSON
CHECKED BY: BROOKE RIVERA
REVISED BY: DUC TRAN
DATE REVISED: 8/10/09

LAST REVISION DATE PLOTTED => 03-FEB-2010
TIME PLOTTED => 10:22
08-10-09

BORDER LAST REVISED 8/1/2008 | RELATIVE BORDER SCALE IS IN INCHES 0 1 2 3 | USERNAME => trmartin | DGN FILE => c07163jb007.dgn | CU 12235 | EA 071631

Dist	COUNTY	ROUTE	POST MILES TOTAL PROJECT	SHEET No.	TOTAL SHEETS
12	Ora	22,405, 605	R0.3/R0.9, 22.3/24.0,3.0/R1.6	354	1929

REGISTERED CIVIL ENGINEER — 8/10/09 DATE

JENNIFER BROOKE RIVERA No. C70332 Exp.09/30/10 CIVIL — REGISTERED PROFESSIONAL ENGINEER — STATE OF CALIFORNIA

2-1-10
PLANS APPROVAL DATE

THE STATE OF CALIFORNIA OR ITS OFFICERS OR AGENTS SHALL NOT BE RESPONSIBLE FOR THE ACCURACY OR COMPLETENESS OF ELECTRONIC COPIES OF THIS PLAN SHEET.

AECOM
999 TOWN & COUNTRY RD
ORANGE, CA 92868

ORANGE COUNTY
TRANSPORTATION AUTHORITY
550 S. MAIN STREET
ORANGE, CA 92863-1584

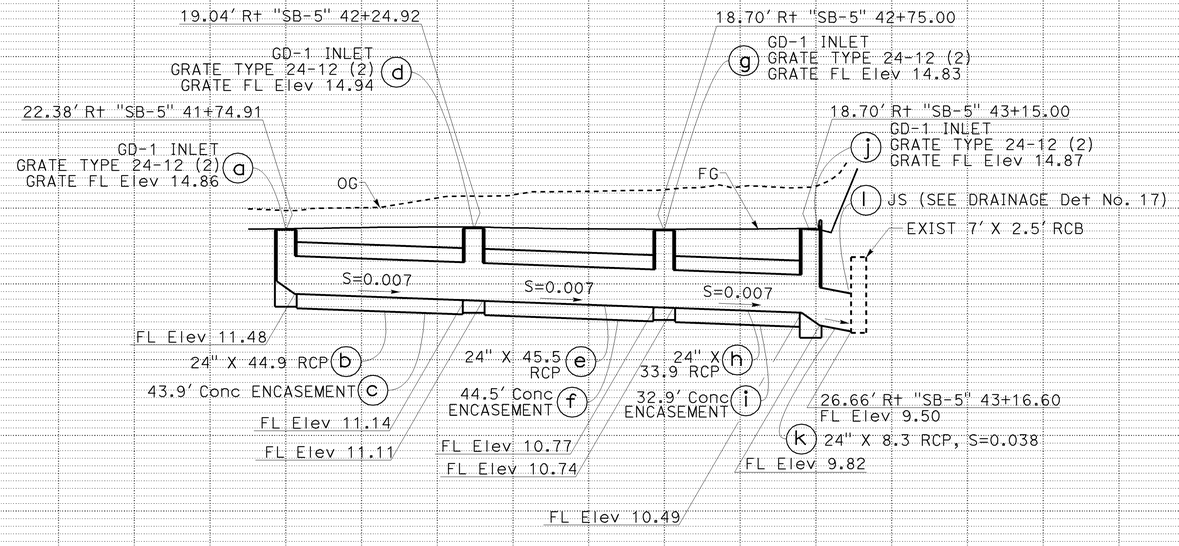

DRAINAGE SYSTEM No. 12

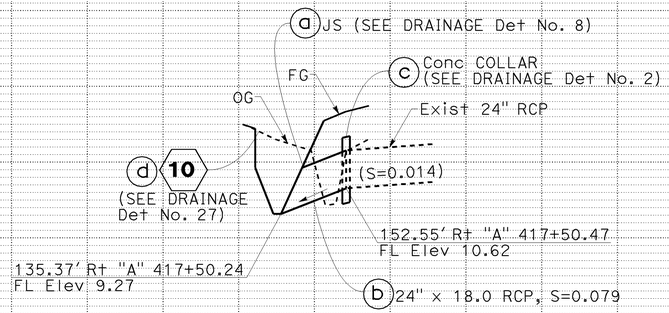

DRAINAGE SYSTEM No. 14

DRAINAGE PROFILE

SCALE: Horiz 1" = 20'
Vert 1" = 4'

DP-8

REVISED BY: DUC TRAN — DATE REVISED: 8/10/09
CALCULATED-DESIGNED BY: RASHOD GIBSON — CHECKED BY: BROOKE RIVERA
CONSULTANT FUNCTIONAL SUPERVISOR: ANDRZEJ NOWAK
STATE OF CALIFORNIA - DEPARTMENT OF TRANSPORTATION — Caltrans

LAST REVISION — DATE PLOTTED => 03-FEB-2010 — TIME PLOTTED => 10:10 — 08-10-09

BORDER LAST REVISED 8/1/2008 — RELATIVE BORDER SCALE IS IN INCHES 0 1 2 3 — USERNAME => trmartin — DGN FILE => c071631b008.dgn — CU 12235 — EA 071631

Dist	COUNTY	ROUTE	POST MILES TOTAL PROJECT	SHEET No.	TOTAL SHEETS
12	Ora	22,405, 605	R0.3/R0.9, 22.3/24.0,3.0/R1.6	355	1929

REGISTERED CIVIL ENGINEER — 8/10/09 DATE

2-1-10
PLANS APPROVAL DATE

REGISTERED PROFESSIONAL ENGINEER — JENNIFER BROOKE RIVERA — No. C70332 — Exp. 09/30/10 CIVIL — STATE OF CALIFORNIA

THE STATE OF CALIFORNIA OR ITS OFFICERS OR AGENTS SHALL NOT BE RESPONSIBLE FOR THE ACCURACY OR COMPLETENESS OF ELECTRONIC COPIES OF THIS PLAN SHEET.

AECOM
999 TOWN & COUNTRY RD
ORANGE, CA 92868

ORANGE COUNTY
TRANSPORTATION AUTHORITY
550 S. MAIN STREET
ORANGE, CA 92863-1584

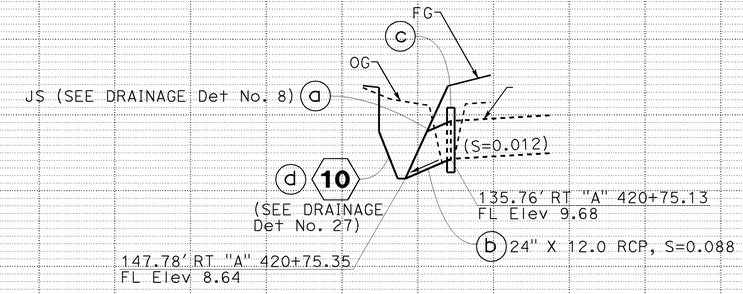

DRAINAGE SYSTEM No. 16

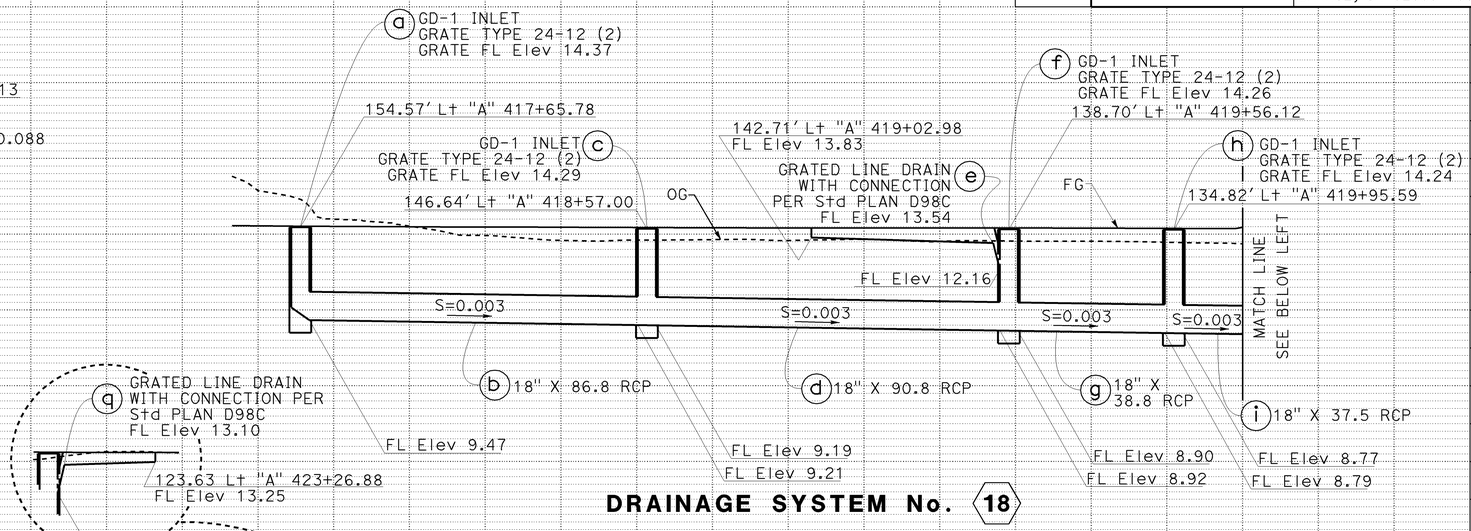

DRAINAGE SYSTEM No. 18

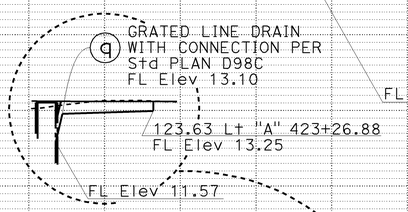

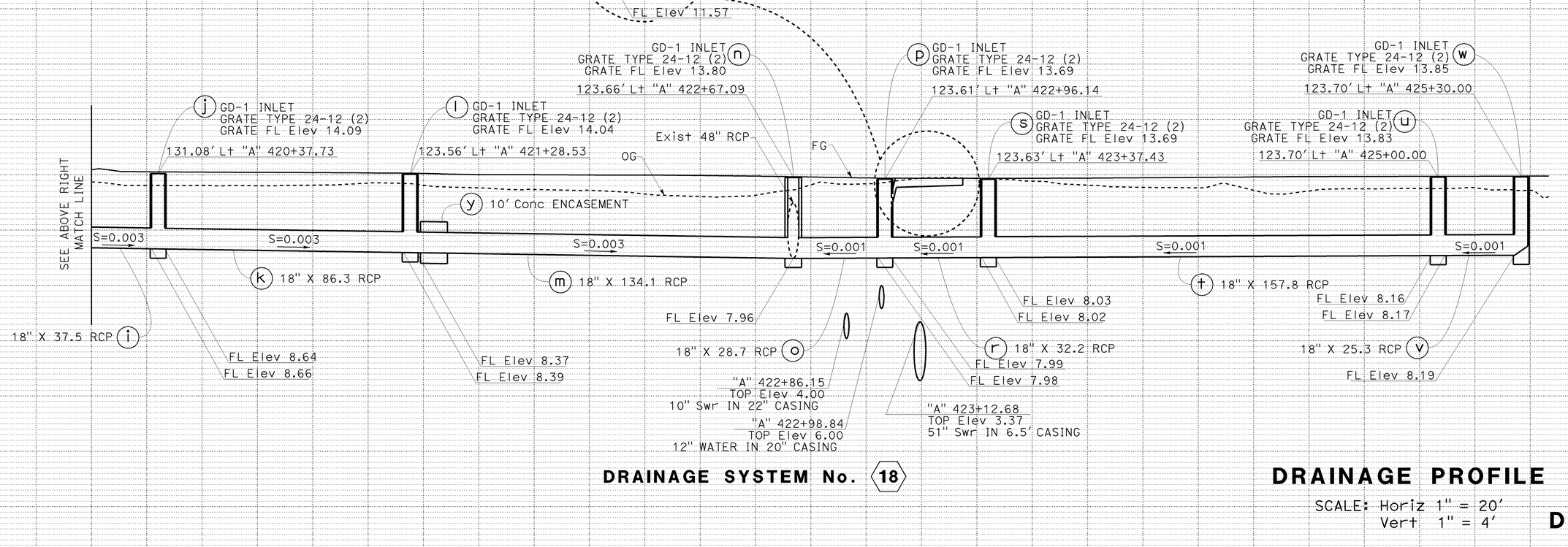

DRAINAGE SYSTEM No. 18

DRAINAGE PROFILE

SCALE: Horiz 1" = 20'
Vert 1" = 4'

DP-9

STATE OF CALIFORNIA - DEPARTMENT OF TRANSPORTATION
CONSULTANT FUNCTIONAL SUPERVISOR: ANDRZEJ NOWAK
CALCULATED-DESIGNED BY: RASHOD GIBSON
CHECKED BY: BROOKE RIVERA
REVISED BY: DUC TRAN
DATE REVISED: 8/10/09

LAST REVISION — DATE PLOTTED => 03-FEB-2010
08-10-09 TIME PLOTTED => 10:10

BORDER LAST REVISED 8/1/2008 | RELATIVE BORDER SCALE IS IN INCHES 0 1 2 3 | USERNAME => trmartin | DGN FILE => c07163ib009.dgn | CU 12235 | EA 071631

Dist	COUNTY	ROUTE	POST MILES TOTAL PROJECT	SHEET No.	TOTAL SHEETS
12	Ora	22,405, 605	R0.3/R0.9, 22.3/24.0,3.0/R1.6	356	1929

REGISTERED CIVIL ENGINEER 8/10/09 DATE

2-1-10
PLANS APPROVAL DATE

REGISTERED PROFESSIONAL ENGINEER JENNIFER BROOKE RIVERA No. C70332 Exp. 09/30/10 CIVIL STATE OF CALIFORNIA

THE STATE OF CALIFORNIA OR ITS OFFICERS OR AGENTS SHALL NOT BE RESPONSIBLE FOR THE ACCURACY OR COMPLETENESS OF ELECTRONIC COPIES OF THIS PLAN SHEET.

AECOM
999 TOWN & COUNTRY RD
ORANGE, CA 92868

ORANGE COUNTY
TRANSPORTATION AUTHORITY
550 S. MAIN STREET
ORANGE, CA 92863-1584

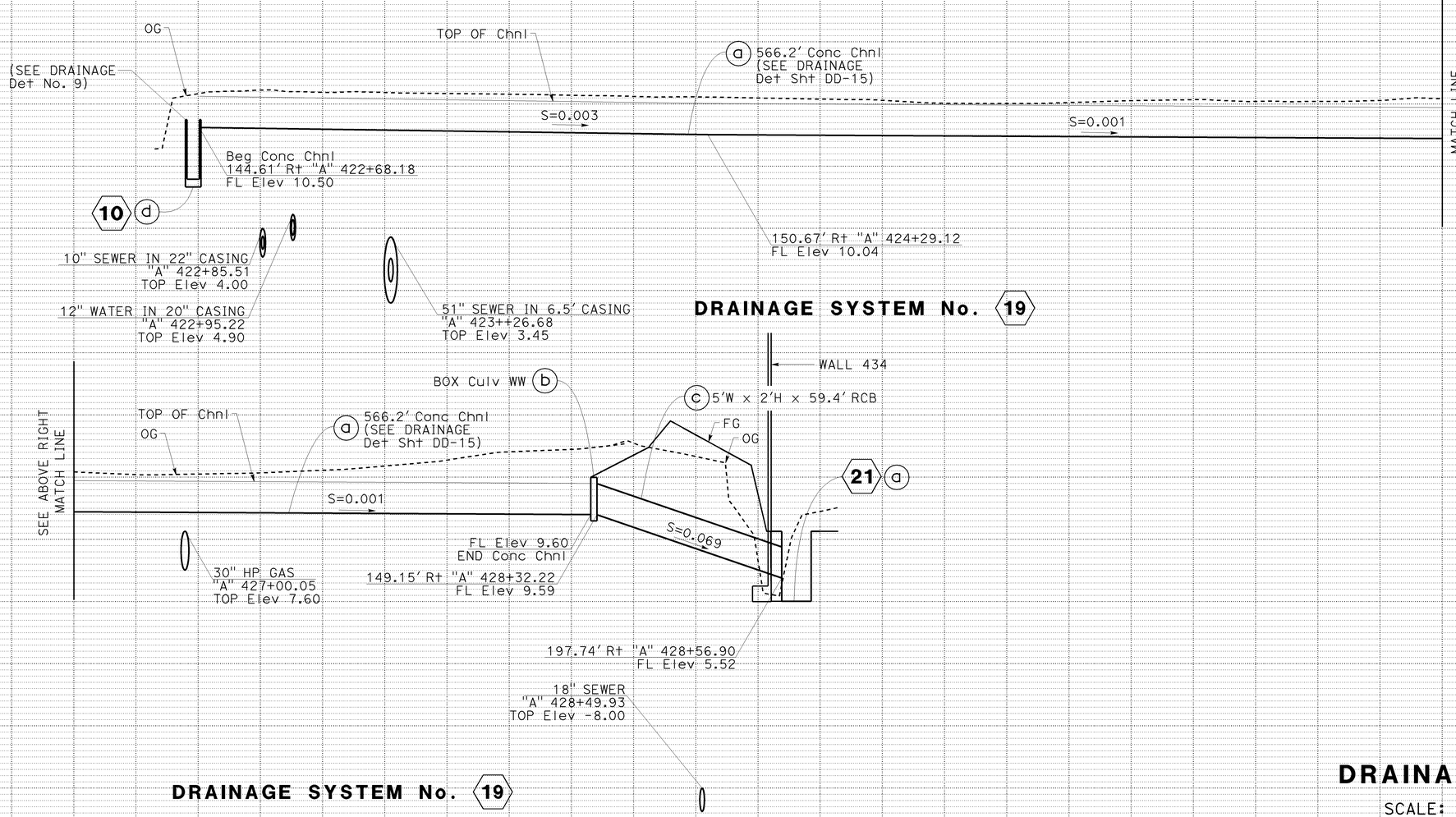

DRAINAGE PROFILE

SCALE: Horiz 1"= 20'
Vert 1"= 4'

DP-10

STATE OF CALIFORNIA - DEPARTMENT OF TRANSPORTATION
Caltrans

CONSULTANT FUNCTIONAL SUPERVISOR: ANDRZEJ NOWAK
CALCULATED-DESIGNED BY: RASHOD GIBSON
CHECKED BY: BROOKE RIVERA
REVISED BY: DUC TRAN
DATE REVISED: 8/10/09

LAST REVISION 08-10-09
DATE PLOTTED => 03-FEB-2010
TIME PLOTTED => 10:10

Dist	COUNTY	ROUTE	POST MILES TOTAL PROJECT	SHEET No.	TOTAL SHEETS
12	Ora	22,405, 605	R0.3/R0.9, 22.3/24.0,3.0/R1.6	357	1929

REGISTERED CIVIL ENGINEER — 12/22/09 DATE

JENNIFER BROOKE RIVERA, No. C70332, Exp. 09/30/10, CIVIL — REGISTERED PROFESSIONAL ENGINEER — STATE OF CALIFORNIA

2-1-10
PLANS APPROVAL DATE

THE STATE OF CALIFORNIA OR ITS OFFICERS OR AGENTS SHALL NOT BE RESPONSIBLE FOR THE ACCURACY OR COMPLETENESS OF ELECTRONIC COPIES OF THIS PLAN SHEET.

AECOM
999 TOWN & COUNTRY RD
ORANGE, CA 92868

ORANGE COUNTY TRANSPORTATION AUTHORITY
550 S. MAIN STREET
ORANGE, CA 92863-1584

TOP OF WALL Rt & Lt Elev 10.02

FL Elev 5.52 (d) 19

457.8' 9'Wx6'H RCB (SEE DRAINAGE Det Sht DD-50)

(f) REMOVE 8'Wx5'H RCB

(b) 9'Wx6'H RCB

(d) ACCESS ROAD

TOP OF WALL Rt & Lt Elev 8.44±

Exist Chnl

TOP OF WALL Rt & Lt Elev 8.37

Conc Chnl (SEE DRAINAGE Det Shts DD-45 to DD-49) (c)

OG

FG

S=0.001

S=0.001

MATCH LINE SEE BELOW LEFT

10+00.00 ℄ BIXBY Chnl =
40.43' Lt "OR" 16+23.31
FL Elev 4.11

10+99.76 ℄ Prop BIXBY Chnl =
34.91' Lt "OR" 15+17.67
FL Elev 4.04

11+25.11 ℄ BIXBY Chnl =
35.24' Lt "OR" 14+90.88
FL Elev 4.02

DRAINAGE SYSTEM No. (21)

NOTE:
1. SEE DRAINAGE DETAIL SHEETS DD-41 TO DD-57.

457.8' 9'Wx6'H RCB (SEE DRAINAGE Det Sht DD-50)

(d) ACCESS ROAD

(b) 9'Wx6'H RCB

OG

TOP OF WALL Rt & Lt Elev 9.69

TOP OF WALL Rt & Lt Elev 8.29

TOP OF WALL Rt & Lt Elev 8.23

FG

TOP OF WALL Lt & Rt

(a) Conc Chnl (SEE DRAINAGE Det Shts DD-45 to DD-49)

SEE ABOVE RIGHT MATCH LINE

S=0.001

MATCH LINE SEE BELOW LEFT

15+82.90 ℄ Prop BIXBY Chnl =
33.20' Lt "OR" 10+22.68
FL Elev 3.69

15+87.90 ℄ Prop BIXBY Chnl =
33.36' Lt "OR" 10+17.69
FL Elev 3.69

16+70.41 ℄ Prop BIXBY Chnl =
35.47' Lt "OR" 9+35.22
FL Elev 3.63

DRAINAGE SYSTEM No. (21)

TOP OF WALL Rt & Lt Elev 7.92

TOP OF WALL Rt & Lt Elev 7.78

TOP OF WALL Rt & Lt Elev 7.72

(a) Conc Chnl (SEE DRAINAGE Det Shts DD-45 to DD-49)

OG

TOP OF WALL Lt & Rt

SEE ABOVE RIGHT MATCH LINE

S=0.001

S=0.001

MATCH LINE SEE SHEET DP-112

21+00.00 ℄ Prop BIXBY Chnl =
64.61' Lt "OR" 5+06.62
FL Elev 3.32

Tel Cond 16.3" CASING
"OR" 4+54.43
TOP Elev 3.28

24+00.00 ℄ Prop BIXBY Chnl =
105.52' Lt "A-2" 32+04.98
FL Elev 3.12

DRAINAGE SYSTEM No. (21)

DRAINAGE PROFILE

SCALE: Horiz 1" = 20'
Vert 1" = 4'

DP-11

REVISED BY	DATE REVISED
DUC TRAN	8/10/09
RASHOD GIBSON	
BROOKE RIVERA	

CALCULATED-DESIGNED BY
CHECKED BY

CONSULTANT FUNCTIONAL SUPERVISOR
ANDRZEJ NOWAK

STATE OF CALIFORNIA - DEPARTMENT OF TRANSPORTATION
Caltrans

LAST REVISION
DATE PLOTTED => 03-FEB-2010
TIME PLOTTED => 10:15
08-10-09

BORDER LAST REVISED 8/1/2008

RELATIVE BORDER SCALE IS IN INCHES 0 1 2 3

USERNAME => trmartin
DGN FILE => c07163ib011.dgn

CU 12235

EA 071631

Dist	COUNTY	ROUTE	POST MILES TOTAL PROJECT	SHEET No.	TOTAL SHEETS
12	Ora	22,405, 605	R0.3/R0.9, 22.3/24.0,3.0/R1.6	358	1929

REGISTERED CIVIL ENGINEER — 8/10/09 DATE

JENNIFER BROOKE RIVERA No. C70332 Exp.09/30/10 CIVIL — REGISTERED PROFESSIONAL ENGINEER — STATE OF CALIFORNIA

2-1-10
PLANS APPROVAL DATE

THE STATE OF CALIFORNIA OR ITS OFFICERS OR AGENTS SHALL NOT BE RESPONSIBLE FOR THE ACCURACY OR COMPLETENESS OF ELECTRONIC COPIES OF THIS PLAN SHEET.

AECOM
999 TOWN & COUNTRY RD
ORANGE, CA 92868

ORANGE COUNTY TRANSPORTATION AUTHORITY
550 S. MAIN STREET
ORANGE, CA 92863-1584

DRAINAGE PROFILE

SCALE: Horiz 1" = 20'
Vert 1" = 4'

DP-12

REVISED BY	DUC TRAN
DATE REVISED	8/10/09
CALCULATED-DESIGNED BY	RASHOD GIBSON
CHECKED BY	BROOKE RIVERA
CONSULTANT FUNCTIONAL SUPERVISOR	ANDRZEJ NOWAK

STATE OF CALIFORNIA - DEPARTMENT OF TRANSPORTATION
Caltrans

LAST REVISION DATE PLOTTED => 03-FEB-2010
TIME PLOTTED => 10:11
08-10-09

BORDER LAST REVISED 8/1/2008 | RELATIVE BORDER SCALE IS IN INCHES 0 1 2 3 | USERNAME => trmartin | DGN FILE => c07163ib012.dgn | CU 12235 | EA 071631

Dist	COUNTY	ROUTE	POST MILES TOTAL PROJECT	SHEET No.	TOTAL SHEETS
12	Ora	22,405, 605	R0.3/R0.9, 22.3/24.0,3.0/R1.6	359	1929

REGISTERED CIVIL ENGINEER — DATE 8/10/09

JENNIFER BROOKE RIVERA No. C70332 Exp.09/30/10 CIVIL — REGISTERED PROFESSIONAL ENGINEER — STATE OF CALIFORNIA

2-1-10
PLANS APPROVAL DATE

THE STATE OF CALIFORNIA OR ITS OFFICERS OR AGENTS SHALL NOT BE RESPONSIBLE FOR THE ACCURACY OR COMPLETENESS OF ELECTRONIC COPIES OF THIS PLAN SHEET.

AECOM
999 TOWN & COUNTRY RD
ORANGE, CA 92868

ORANGE COUNTY
TRANSPORTATION AUTHORITY
550 S. MAIN STREET
ORANGE, CA 92863-1584

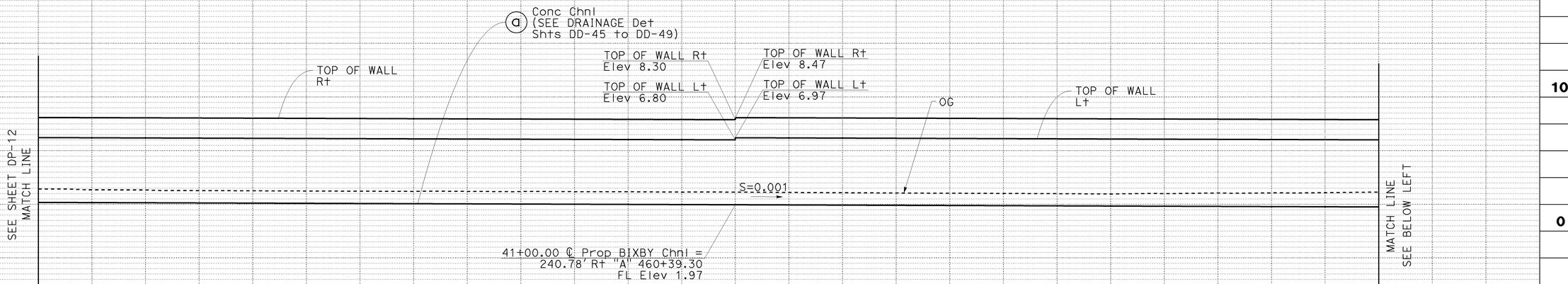

DRAINAGE SYSTEM No. 21

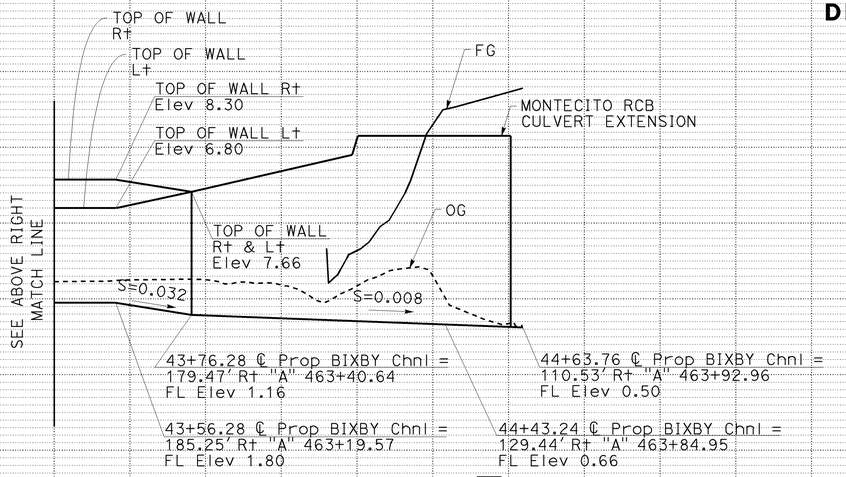

DRAINAGE SYSTEM No. 21

DRAINAGE PROFILE

SCALE: Horiz 1" = 20'
Vert 1" = 4'

DP-13

STATE OF CALIFORNIA - DEPARTMENT OF TRANSPORTATION — Caltrans

CONSULTANT FUNCTIONAL SUPERVISOR: ANDRZEJ NOWAK

CALCULATED-DESIGNED BY: RASHOD GIBSON
CHECKED BY: BROOKE RIVERA

REVISED BY: DUC TRAN
DATE REVISED: 8/10/09

LAST REVISION — DATE PLOTTED => 03-FEB-2010
08-10-09 — TIME PLOTTED => 10:11

BORDER LAST REVISED 8/1/2008

RELATIVE BORDER SCALE IS IN INCHES 0 1 2 3

USERNAME => trmartin
DGN FILE => c07163ib013.dgn

CU 12235

EA 071631

Dist	COUNTY	ROUTE	POST MILES TOTAL PROJECT	SHEET No.	TOTAL SHEETS
12	Ora	22,405, 605	R0.3/R0.9, 22.3/24.0,3.0/R1.6	360	1929

REGISTERED CIVIL ENGINEER — 8/10/09 DATE

JENNIFER BROOKE RIVERA No. C70332 Exp.09/30/10 CIVIL — REGISTERED PROFESSIONAL ENGINEER — STATE OF CALIFORNIA

2-1-10
PLANS APPROVAL DATE

THE STATE OF CALIFORNIA OR ITS OFFICERS OR AGENTS SHALL NOT BE RESPONSIBLE FOR THE ACCURACY OR COMPLETENESS OF ELECTRONIC COPIES OF THIS PLAN SHEET.

AECOM
999 TOWN & COUNTRY RD
ORANGE, CA 92868

ORANGE COUNTY
TRANSPORTATION AUTHORITY
550 S. MAIN STREET
ORANGE, CA 92863-1584

REVISED BY: DUC TRAN — DATE REVISED: 8/10/09
CALCULATED-DESIGNED BY: RASHOD GIBSON
CHECKED BY: BROOKE RIVERA
CONSULTANT FUNCTIONAL SUPERVISOR: ANDRZEJ NOWAK
STATE OF CALIFORNIA - DEPARTMENT OF TRANSPORTATION

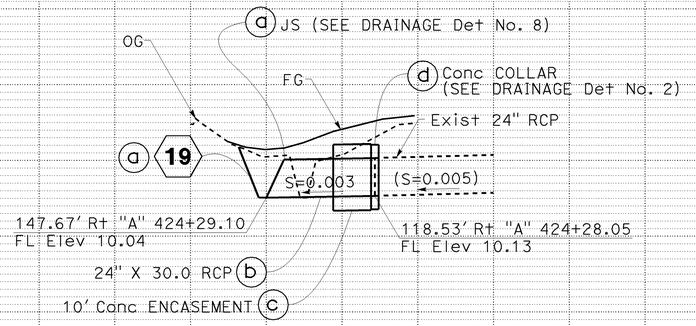

DRAINAGE SYSTEM No. 20

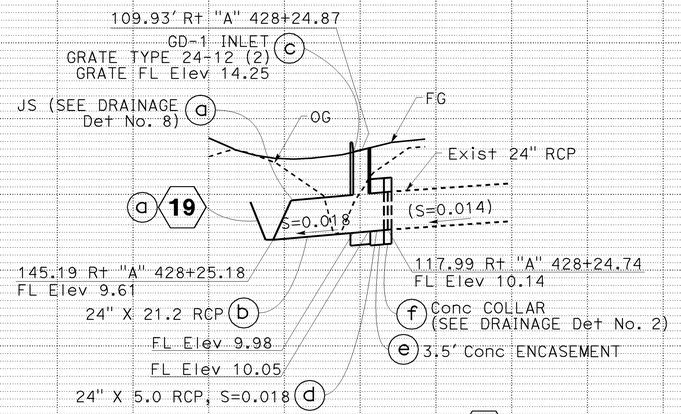

DRAINAGE SYSTEM No. 22

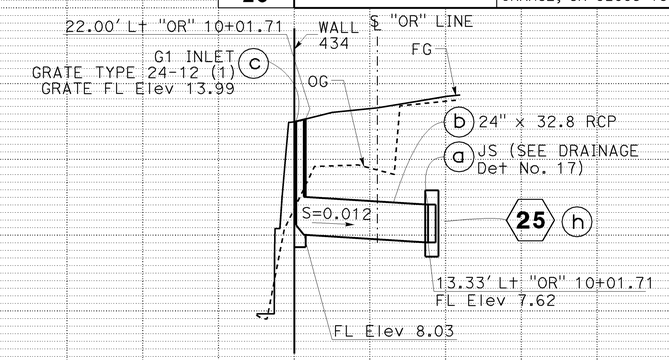

DRAINAGE SYSTEM No. 23

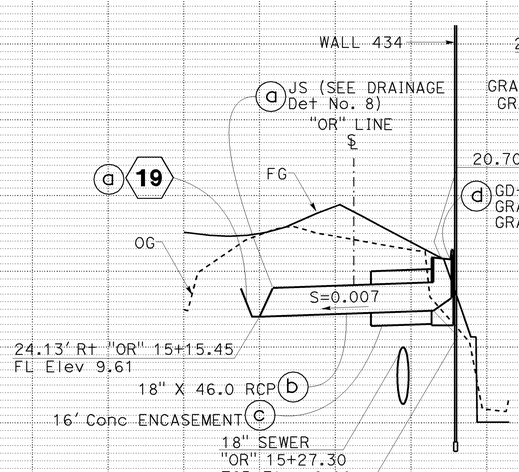

DRAINAGE SYSTEM No. 23A

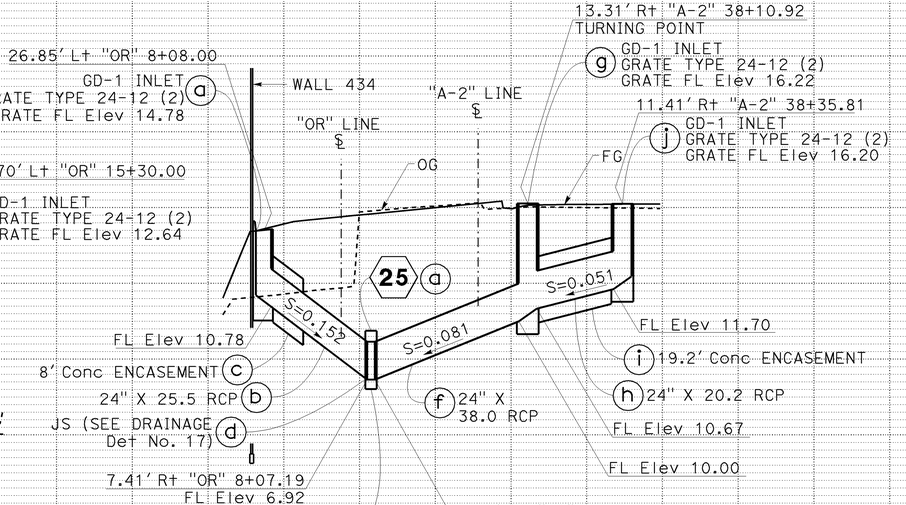

DRAINAGE SYSTEM No. 24

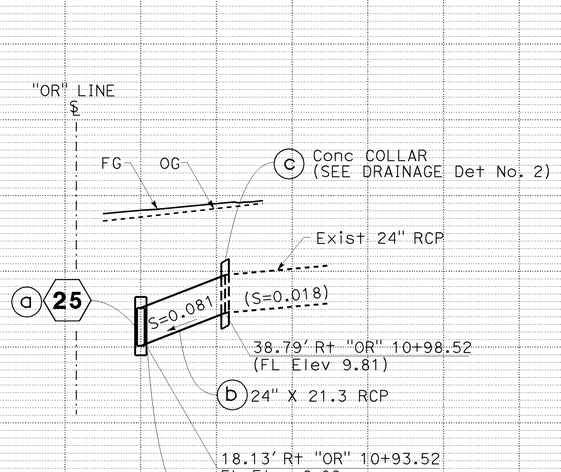

DRAINAGE SYSTEM No. 24A

DRAINAGE PROFILE

SCALE: Horiz 1" = 20'
Vert 1" = 4'

DP-14

LAST REVISION: DATE PLOTTED => 03-FEB-2010
08-10-09 TIME PLOTTED => 10:11

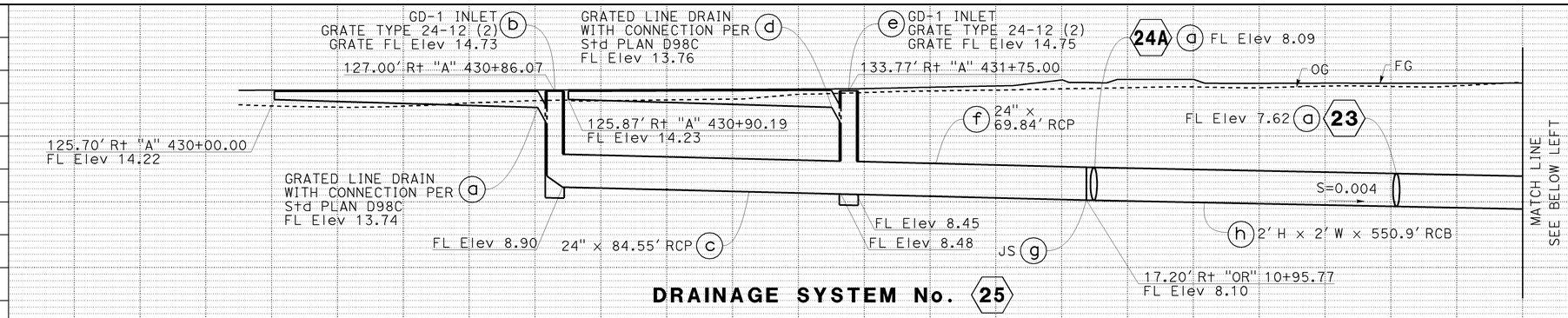

DRAINAGE SYSTEM No. 25

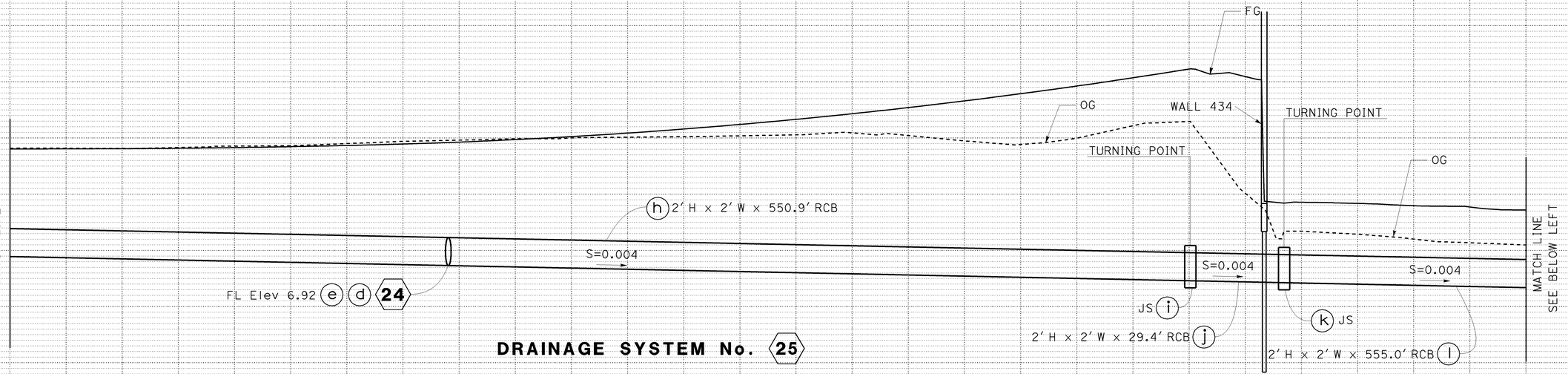

DRAINAGE SYSTEM No. 25

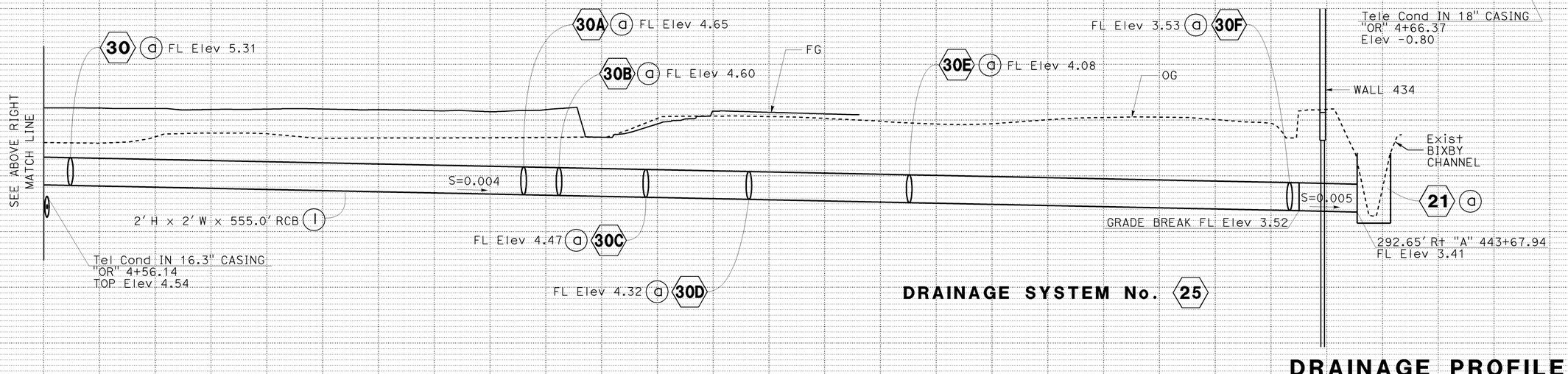

DRAINAGE SYSTEM No. 25

DRAINAGE PROFILE

SCALE: Horiz 1" = 20'
Vert 1" = 4'

DP-15

Dist	COUNTY	ROUTE	POST MILES TOTAL PROJECT	SHEET No.	TOTAL SHEETS
12	Ora	22,405, 605	R0.3/R0.9, 22.3/24.0,3.0/R1.6	361	1929

REGISTERED CIVIL ENGINEER — 8/10/09 DATE

JENNIFER BROOKE RIVERA No. C70332 Exp.09/30/10 CIVIL — REGISTERED PROFESSIONAL ENGINEER — STATE OF CALIFORNIA

2-1-10
PLANS APPROVAL DATE

THE STATE OF CALIFORNIA OR ITS OFFICERS OR AGENTS SHALL NOT BE RESPONSIBLE FOR THE ACCURACY OR COMPLETENESS OF ELECTRONIC COPIES OF THIS PLAN SHEET.

AECOM
999 TOWN & COUNTRY RD
ORANGE, CA 92868

ORANGE COUNTY
TRANSPORTATION AUTHORITY
550 S. MAIN STREET
ORANGE, CA 92863-1584

REVISED BY	DATE REVISED
DUC TRAN	8/10/09

CALCULATED-DESIGNED BY: RASHOD GIBSON
CHECKED BY: BROOKE RIVERA

CONSULTANT FUNCTIONAL SUPERVISOR: ANDRZEJ NOWAK

STATE OF CALIFORNIA - DEPARTMENT OF TRANSPORTATION
Caltrans

LAST REVISION DATE PLOTTED => 03-FEB-2010
TIME PLOTTED => 08-10-09 0:11

BORDER LAST REVISED 8/1/2008 | RELATIVE BORDER SCALE IS IN INCHES 0 1 2 3 | USERNAME => trmartin | DGN FILE => c07163ib015.dgn | CU 12235 | EA 071631

Dist	COUNTY	ROUTE	POST MILES TOTAL PROJECT	SHEET No.	TOTAL SHEETS
12	Ora	22,405, 605	R0.3/R0.9, 22.3/24.0,3.0/R1.6	362	1929

REGISTERED CIVIL ENGINEER — 8/10/09 DATE

JENNIFER BROOKE RIVERA No. C70332 Exp.09/30/10 CIVIL — REGISTERED PROFESSIONAL ENGINEER — STATE OF CALIFORNIA

2-1-10
PLANS APPROVAL DATE

THE STATE OF CALIFORNIA OR ITS OFFICERS OR AGENTS SHALL NOT BE RESPONSIBLE FOR THE ACCURACY OR COMPLETENESS OF ELECTRONIC COPIES OF THIS PLAN SHEET.

AECOM
999 TOWN & COUNTRY RD
ORANGE, CA 92868

ORANGE COUNTY
TRANSPORTATION AUTHORITY
550 S. MAIN STREET
ORANGE, CA 92863-1584

HMAOD TABLE

SYSTEM No.	INLET Elev	OUTLET Elev
26A	13.88	11.90
26B	14.24	11.49
26C	14.72	11.16
26D	14.76	10.80
26E	15.49	10.47
26F	16.08	9.86

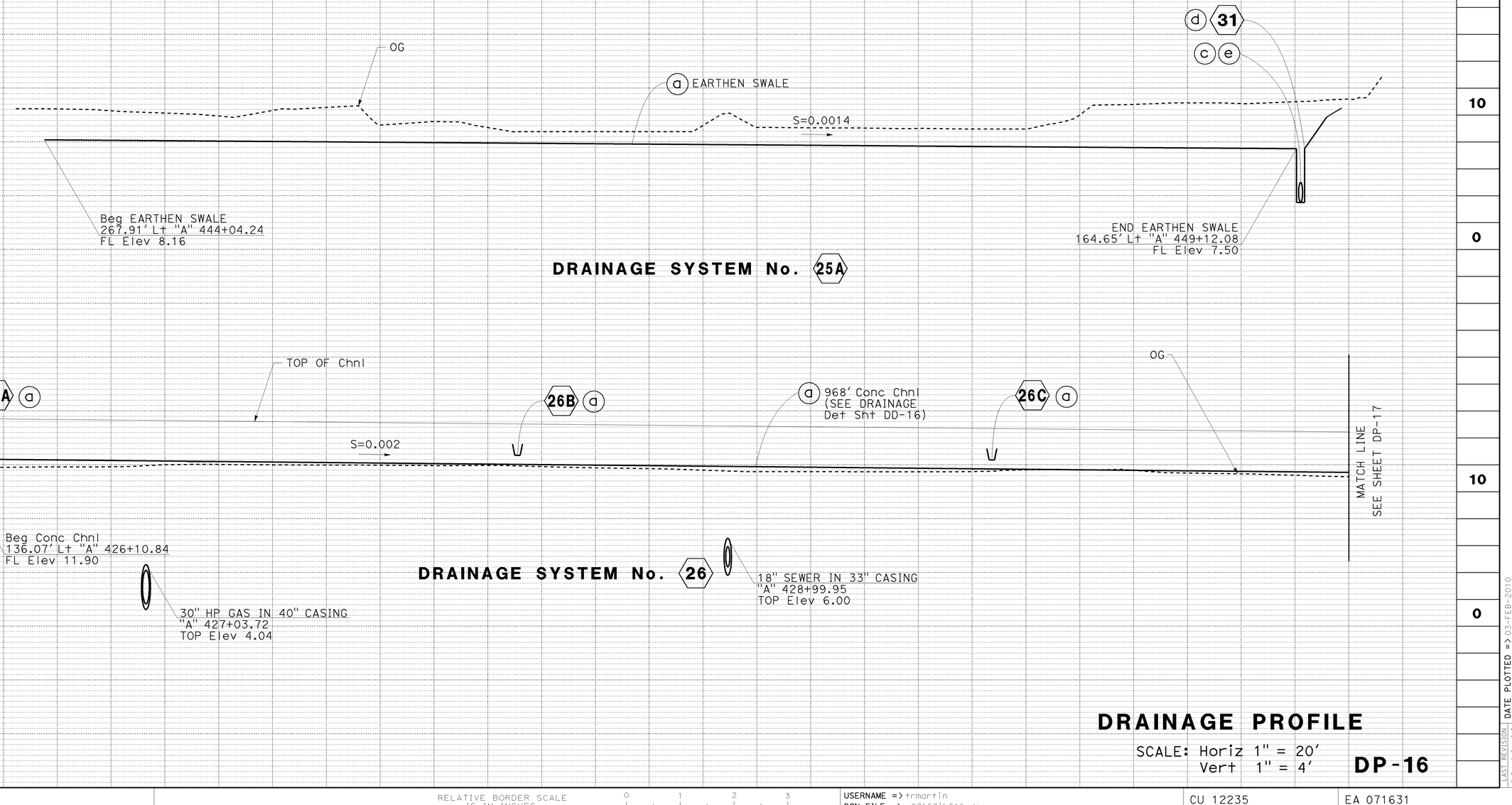

DRAINAGE PROFILE

SCALE: Horiz 1" = 20'
Vert 1" = 4'

DP-16

STATE OF CALIFORNIA - DEPARTMENT OF TRANSPORTATION
CONSULTANT FUNCTIONAL SUPERVISOR: ANDRZEJ NOWAK
CALCULATED-DESIGNED BY: RASHOD GIBSON
CHECKED BY: BROOKE RIVERA
REVISED BY: DUC TRAN
DATE REVISED: 8/10/09

LAST REVISION DATE PLOTTED => 03-FEB-2010
TIME PLOTTED => 10:11

BORDER LAST REVISED 8/1/2008 | RELATIVE BORDER SCALE IS IN INCHES 0 1 2 3 | USERNAME => trmartin | DGN FILE => c07163ib016.dgn | CU 12235 | EA 071631

Dist	COUNTY	ROUTE	POST MILES TOTAL PROJECT	SHEET No.	TOTAL SHEETS
12	Ora	22,405, 605	R0.3/R0.9, 22.3/24.0,3.0/R1.6	363	1929

REGISTERED CIVIL ENGINEER — 8/10/09 DATE

JENNIFER BROOKE RIVERA No. C70332 Exp.09/30/10 CIVIL — REGISTERED PROFESSIONAL ENGINEER — STATE OF CALIFORNIA

2-1-10
PLANS APPROVAL DATE

THE STATE OF CALIFORNIA OR ITS OFFICERS OR AGENTS SHALL NOT BE RESPONSIBLE FOR THE ACCURACY OR COMPLETENESS OF ELECTRONIC COPIES OF THIS PLAN SHEET.

AECOM
999 TOWN & COUNTRY RD
ORANGE, CA 92868

ORANGE COUNTY
TRANSPORTATION AUTHORITY
550 S. MAIN STREET
ORANGE, CA 92863-1584

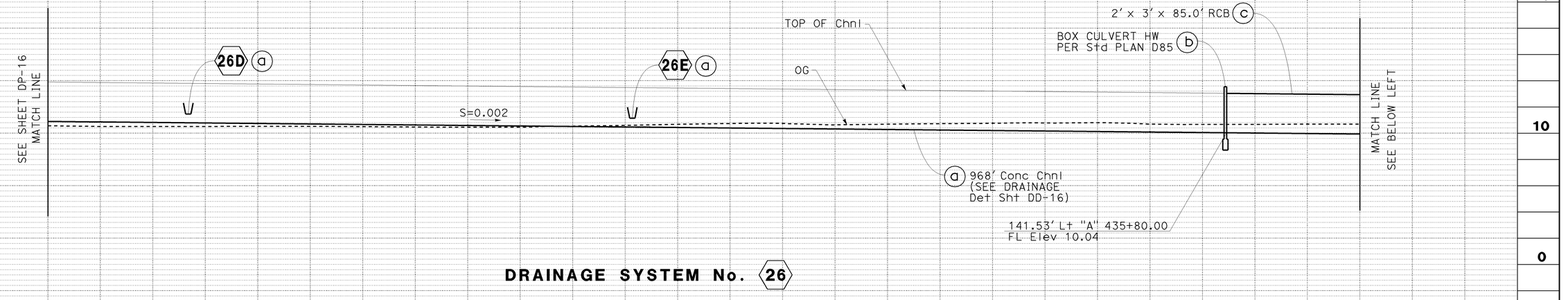

DRAINAGE SYSTEM No. 26

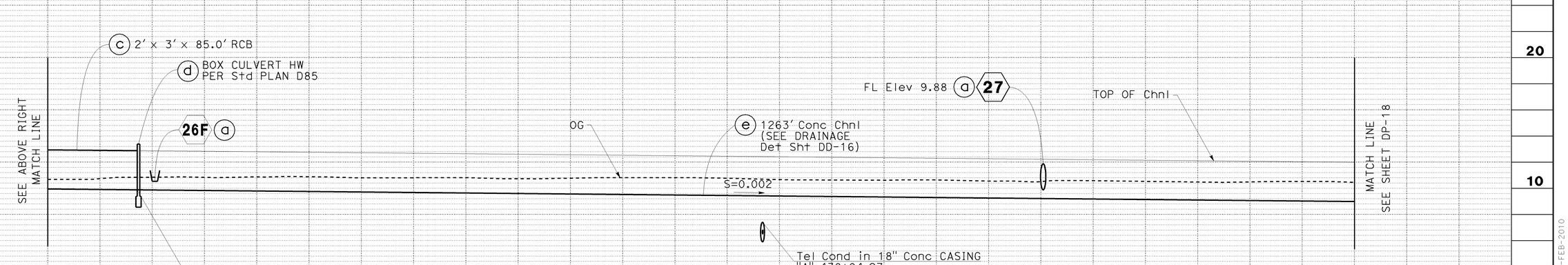

DRAINAGE SYSTEM No. 26

DRAINAGE PROFILE

SCALE: Horiz 1" = 20'
Vert 1" = 4'

DP-17

STATE OF CALIFORNIA - DEPARTMENT OF TRANSPORTATION
Caltrans

CONSULTANT FUNCTIONAL SUPERVISOR: ANDRZEJ NOWAK

CALCULATED-DESIGNED BY: BROOKE RIVERA
CHECKED BY: RASHOD GIBSON

REVISED BY: DUC TRAN
DATE REVISED: 8/10/09

LAST REVISION DATE PLOTTED => 03-FEB-2010
TIME PLOTTED => 10:11
08-10-09

BORDER LAST REVISED 8/1/2008

RELATIVE BORDER SCALE IS IN INCHES 0 1 2 3

USERNAME => trmartin
DGN FILE => c07163ib017.dgn

CU 12235

EA 071631

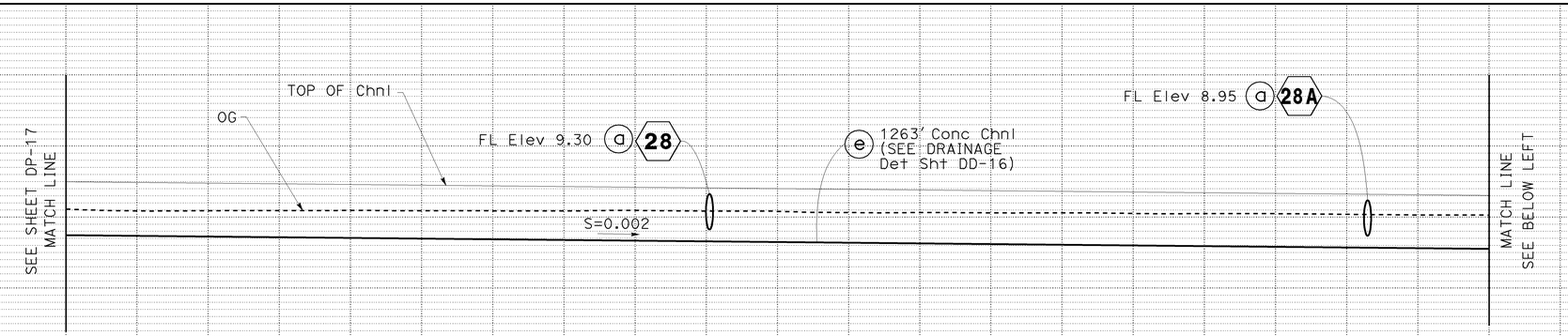

DRAINAGE SYSTEM No. 26

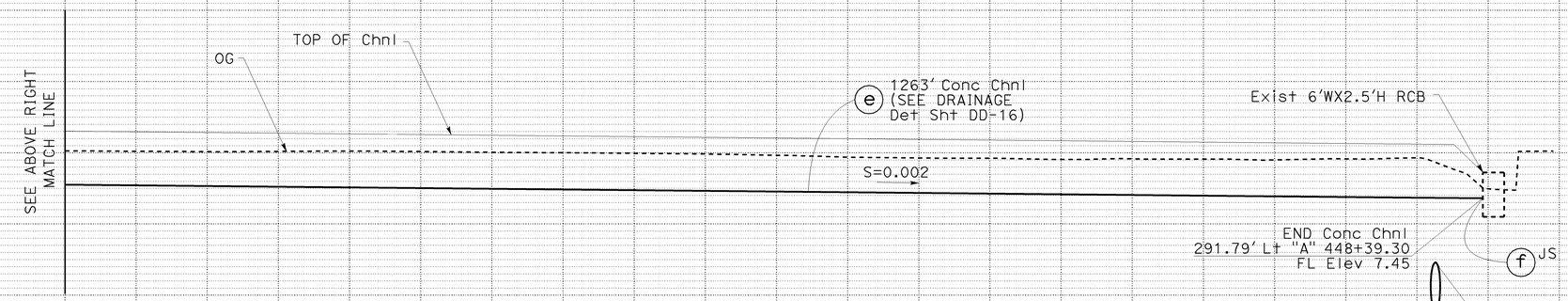

DRAINAGE SYSTEM No. 26

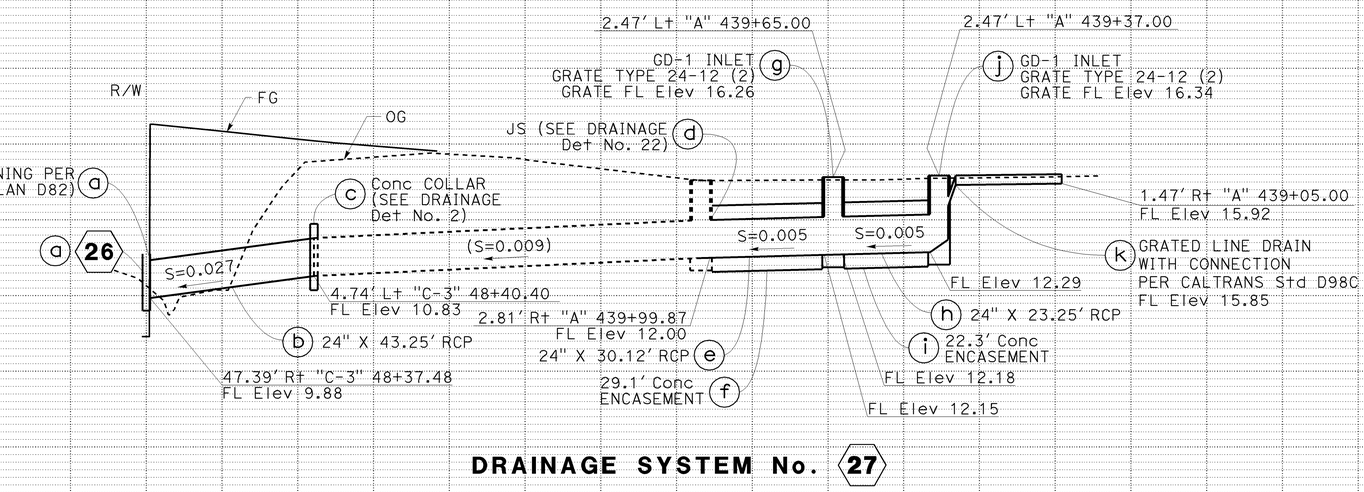

DRAINAGE SYSTEM No. 27

DRAINAGE PROFILE

SCALE: Horiz 1" = 20'
Vert 1" = 4'

DP-18

Dist	COUNTY	ROUTE	POST MILES TOTAL PROJECT	SHEET No.	TOTAL SHEETS
12	Ora	22,405, 605	R0.3/R0.9, 22.3/24.0,3.0/R1.6	364	1929

REGISTERED CIVIL ENGINEER — 8/10/09 DATE

JENNIFER BROOKE RIVERA No. C70332 Exp.09/30/10 CIVIL — REGISTERED PROFESSIONAL ENGINEER — STATE OF CALIFORNIA

2-1-10
PLANS APPROVAL DATE

THE STATE OF CALIFORNIA OR ITS OFFICERS OR AGENTS SHALL NOT BE RESPONSIBLE FOR THE ACCURACY OR COMPLETENESS OF ELECTRONIC COPIES OF THIS PLAN SHEET.

AECOM
999 TOWN & COUNTRY RD
ORANGE, CA 92868

ORANGE COUNTY TRANSPORTATION AUTHORITY
550 S. MAIN STREET
ORANGE, CA 92863-1584

REVISED BY: DUC TRAN — DATE REVISED: 8/10/09
CALCULATED-DESIGNED BY: RASHOD GIBSON
CHECKED BY: BROOKE RIVERA
CONSULTANT FUNCTIONAL SUPERVISOR: ANDRZEJ NOWAK
STATE OF CALIFORNIA - DEPARTMENT OF TRANSPORTATION — Caltrans

LAST REVISION: 08-10-09 DATE PLOTTED => 03-FEB-2010 TIME PLOTTED => 10:11

BORDER LAST REVISED 8/1/2008 — RELATIVE BORDER SCALE IS IN INCHES 0 1 2 3 — USERNAME => trmartin — DGN FILE => c07163ib018.dgn — CU 12235 — EA 071631

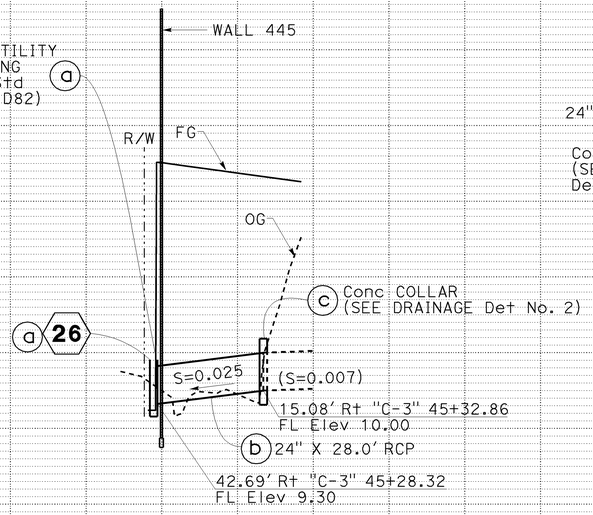

DRAINAGE SYSTEM No. 28

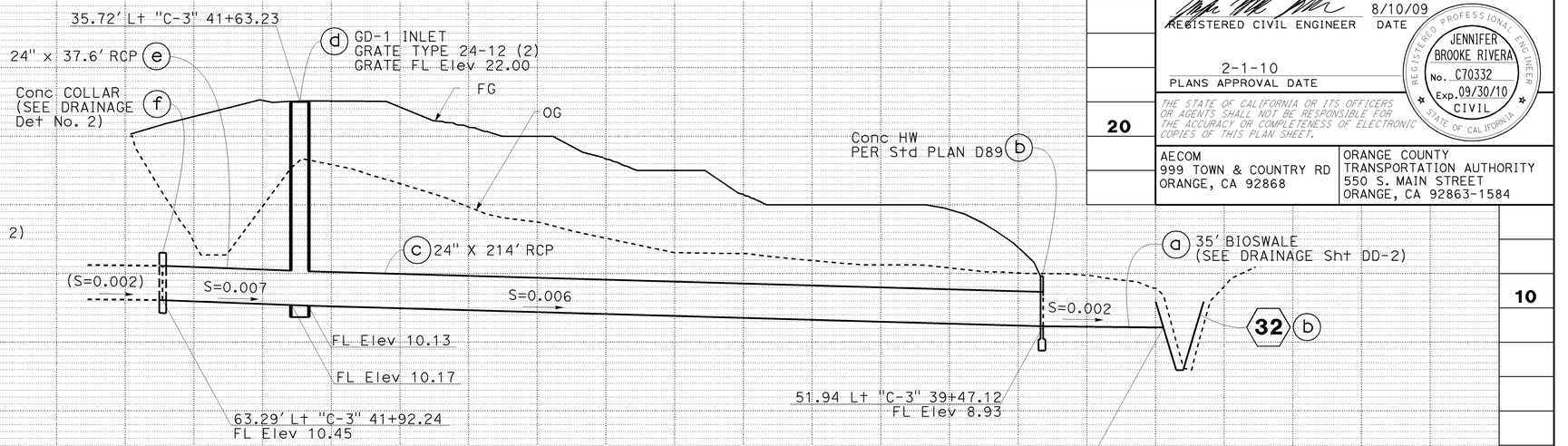

DRAINAGE SYSTEM No. 29

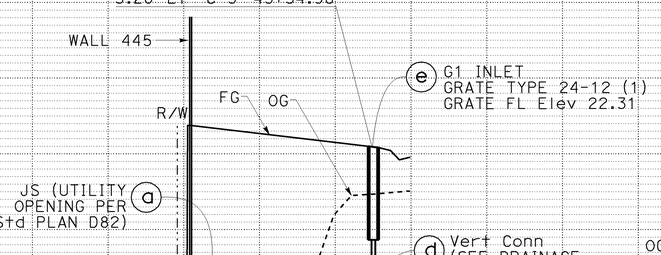

DRAINAGE SYSTEM No. 28A

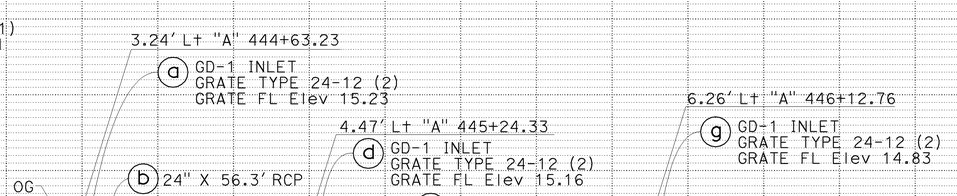

DRAINAGE SYSTEM No. 29A

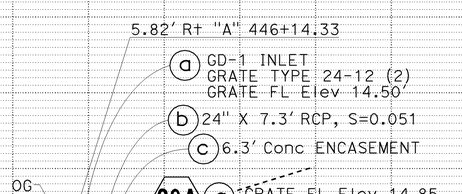

DRAINAGE SYSTEM No. 29B

DRAINAGE PROFILE

SCALE: Horiz 1" = 20'
Vert 1" = 4'

DP-19

Dist	COUNTY	ROUTE	POST MILES TOTAL PROJECT	SHEET No.	TOTAL SHEETS
12	Ora	22,405, 605	R0.3/R0.9, 22.3/24.0,3.0/R1.6	365	1929

8/10/09
REGISTERED CIVIL ENGINEER DATE

JENNIFER BROOKE RIVERA No. C70332 Exp.09/30/10 CIVIL — REGISTERED PROFESSIONAL ENGINEER — STATE OF CALIFORNIA

2-1-10
PLANS APPROVAL DATE

THE STATE OF CALIFORNIA OR ITS OFFICERS OR AGENTS SHALL NOT BE RESPONSIBLE FOR THE ACCURACY OR COMPLETENESS OF ELECTRONIC COPIES OF THIS PLAN SHEET.

AECOM
999 TOWN & COUNTRY RD
ORANGE, CA 92868

ORANGE COUNTY TRANSPORTATION AUTHORITY
550 S. MAIN STREET
ORANGE, CA 92863-1584

REVISED BY: DUC TRAN — DATE REVISED: 8/10/09
CALCULATED-DESIGNED BY: RASHOD GIBSON
CHECKED BY: BROOKE RIVERA
CONSULTANT FUNCTIONAL SUPERVISOR: ANDRZEJ NOWAK
STATE OF CALIFORNIA - DEPARTMENT OF TRANSPORTATION
Caltrans

LAST REVISION: DATE PLOTTED => 03-FEB-2010 TIME PLOTTED => 10:12
08-10-09

Dist	COUNTY	ROUTE	POST MILES TOTAL PROJECT	SHEET No.	TOTAL SHEETS
12	Ora	22,405, 605	R0.3/R0.9, 22.3/24.0,3.0/R1.6	366	1929

REGISTERED CIVIL ENGINEER — 8/10/09 DATE

2-1-10
PLANS APPROVAL DATE

REGISTERED PROFESSIONAL ENGINEER — JENNIFER BROOKE RIVERA — No. C70332 — Exp.09/30/10 CIVIL — STATE OF CALIFORNIA

THE STATE OF CALIFORNIA OR ITS OFFICERS OR AGENTS SHALL NOT BE RESPONSIBLE FOR THE ACCURACY OR COMPLETENESS OF ELECTRONIC COPIES OF THIS PLAN SHEET.

AECOM
999 TOWN & COUNTRY RD
ORANGE, CA 92868

ORANGE COUNTY
TRANSPORTATION AUTHORITY
550 S. MAIN STREET
ORANGE, CA 92863-1584

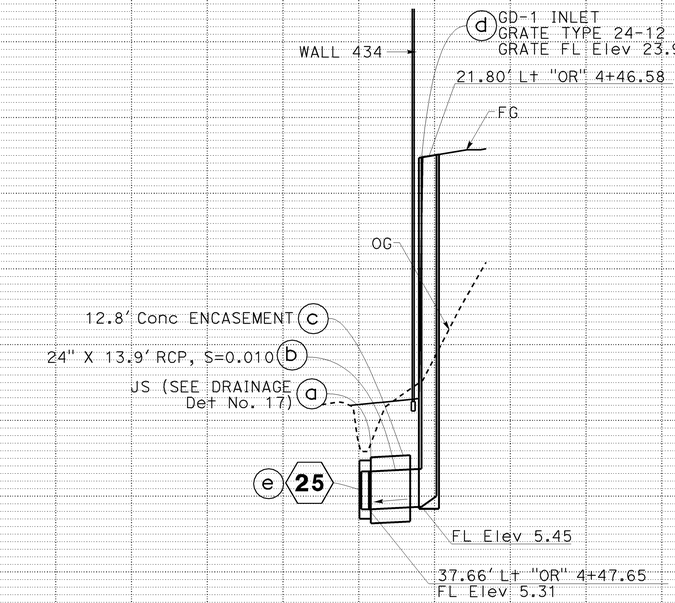

DRAINAGE SYSTEM No. 30

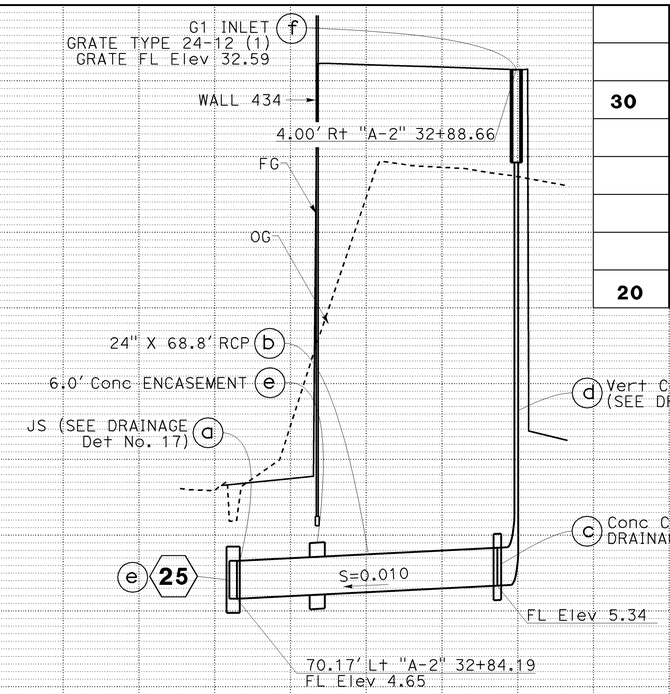

DRAINAGE SYSTEM No. 30A

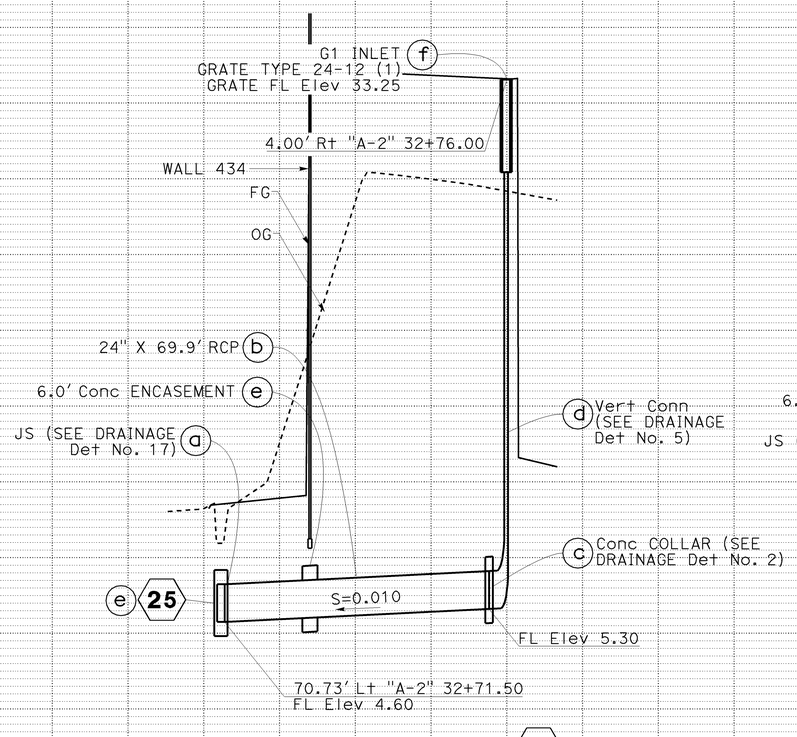

DRAINAGE SYSTEM No. 30B

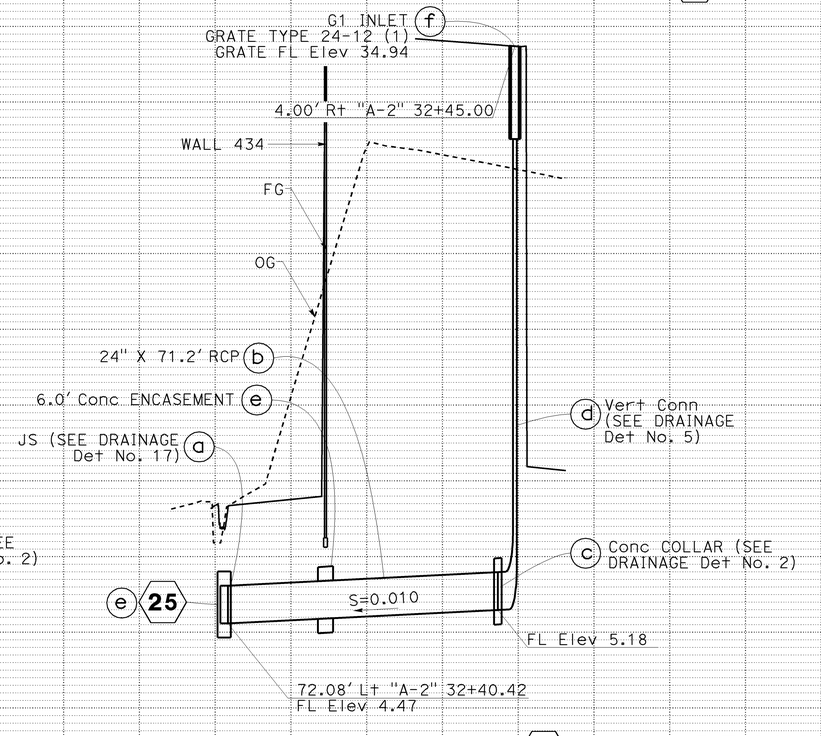

DRAINAGE SYSTEM No. 30C

DRAINAGE PROFILE

SCALE: Horiz 1" = 20'
Vert 1" = 4'

DP-20

REVISED BY	DATE REVISED
DUC TRAN	8/10/09

CALCULATED-DESIGNED BY: RASHOD GIBSON
CHECKED BY: BROOKE RIVERA

CONSULTANT FUNCTIONAL SUPERVISOR: ANDRZEJ NOWAK

STATE OF CALIFORNIA - DEPARTMENT OF TRANSPORTATION
Caltrans

LAST REVISION DATE PLOTTED => 03-FEB-2010
TIME PLOTTED => 10:12
08-10-09

BORDER LAST REVISED 8/1/2008

RELATIVE BORDER SCALE IS IN INCHES 0 1 2 3

USERNAME => trmartin
DGN FILE => c07163ib020.dgn

CU 12235

EA 071631

Dist	COUNTY	ROUTE	POST MILES TOTAL PROJECT	SHEET No.	TOTAL SHEETS
12	Ora	22,405, 605	R0.3/R0.9, 22.3/24.0,3.0/R1.6	367	1929

REGISTERED CIVIL ENGINEER — 8/10/09 DATE

2-1-10
PLANS APPROVAL DATE

JENNIFER BROOKE RIVERA No. C70332 Exp.09/30/10 CIVIL — REGISTERED PROFESSIONAL ENGINEER — STATE OF CALIFORNIA

THE STATE OF CALIFORNIA OR ITS OFFICERS OR AGENTS SHALL NOT BE RESPONSIBLE FOR THE ACCURACY OR COMPLETENESS OF ELECTRONIC COPIES OF THIS PLAN SHEET.

AECOM
999 TOWN & COUNTRY RD
ORANGE, CA 92868

ORANGE COUNTY
TRANSPORTATION AUTHORITY
550 S. MAIN STREET
ORANGE, CA 92863-1584

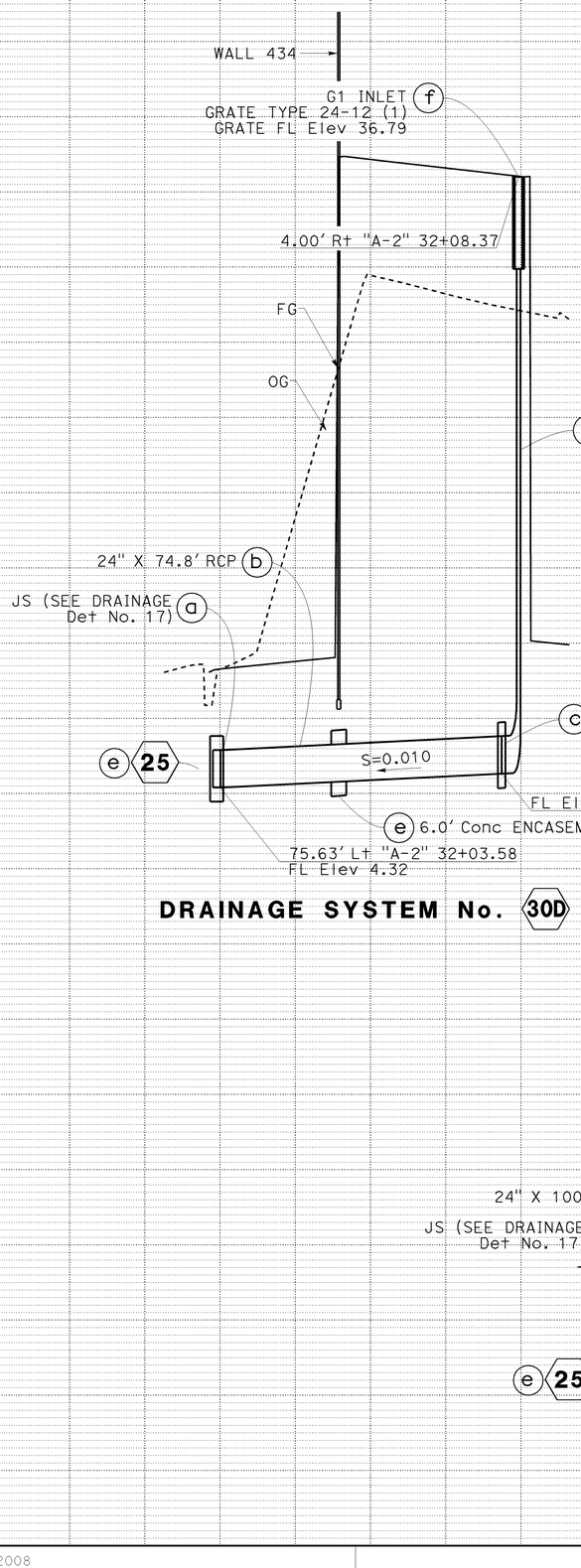

DRAINAGE SYSTEM No. 30D

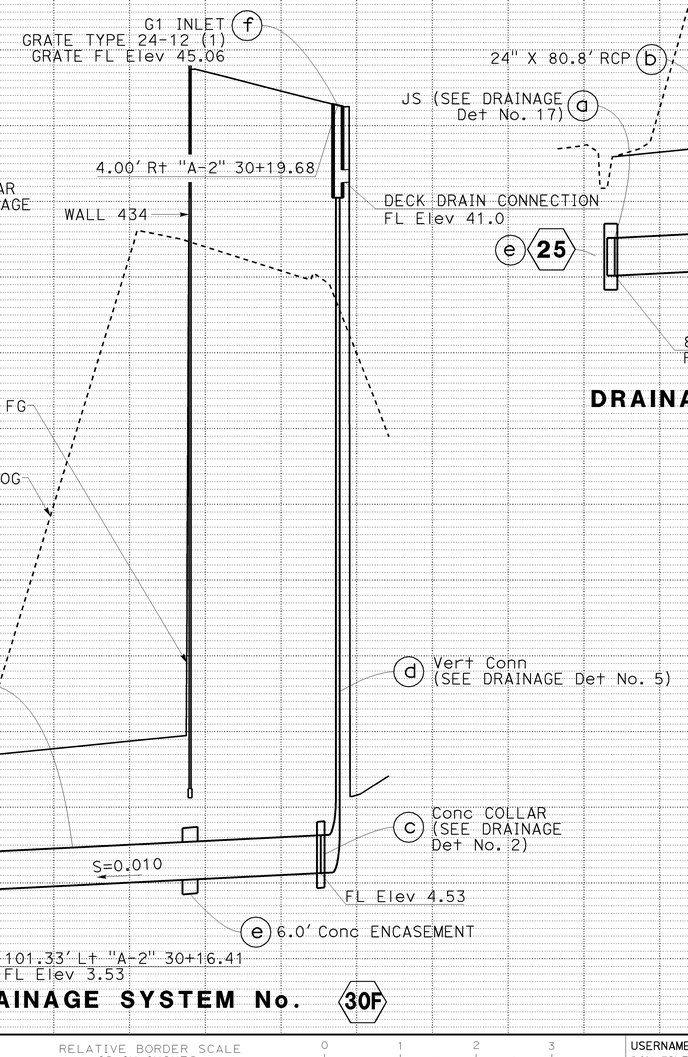

DRAINAGE SYSTEM No. 30F

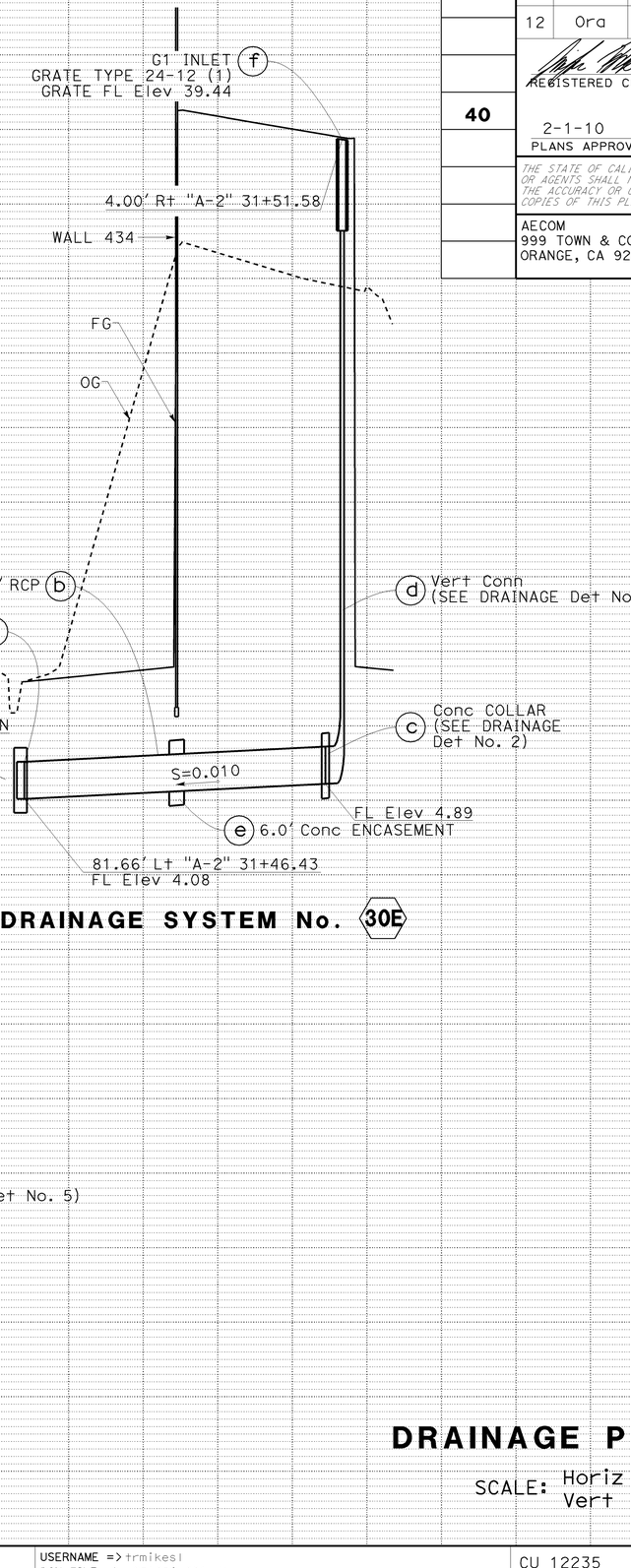

DRAINAGE SYSTEM No. 30E

DRAINAGE PROFILE

SCALE: Horiz 1" = 20'
Vert 1" = 4'

DP-21

STATE OF CALIFORNIA - DEPARTMENT OF TRANSPORTATION
Caltrans

CONSULTANT FUNCTIONAL SUPERVISOR: ANDRZEJ NOWAK
CALCULATED-DESIGNED BY
CHECKED BY
REVISED BY: DUC TRAN
DATE REVISED: 8/10/09
RASHOD GIBSON
BROOKE RIVERA

LAST REVISION DATE PLOTTED => 03-FEB-2010
TIME PLOTTED => 08:44

BORDER LAST REVISED 8/1/2008
RELATIVE BORDER SCALE IS IN INCHES 0 1 2 3
USERNAME => trmikesl
DGN FILE => c07163ib021.dgn
CU 12235
EA 071631

Dist	COUNTY	ROUTE	POST MILES TOTAL PROJECT	SHEET No.	TOTAL SHEETS
12	Ora	22,405, 605	R0.3/R0.9, 22.3/24.0,3.0/R1.6	368	1929

REGISTERED CIVIL ENGINEER — 8/10/09 DATE

JENNIFER BROOKE RIVERA No. C70332 Exp.09/30/10 CIVIL — REGISTERED PROFESSIONAL ENGINEER — STATE OF CALIFORNIA

2-1-10
PLANS APPROVAL DATE

THE STATE OF CALIFORNIA OR ITS OFFICERS OR AGENTS SHALL NOT BE RESPONSIBLE FOR THE ACCURACY OR COMPLETENESS OF ELECTRONIC COPIES OF THIS PLAN SHEET.

AECOM
999 TOWN & COUNTRY RD
ORANGE, CA 92868

ORANGE COUNTY
TRANSPORTATION AUTHORITY
550 S. MAIN STREET
ORANGE, CA 92863-1584

REVISED BY: DUC TRAN — DATE REVISED: 8/10/09

CALCULATED-DESIGNED BY: RASHOD GIBSON
CHECKED BY: BROOKE RIVERA

CONSULTANT FUNCTIONAL SUPERVISOR: ANDRZEJ NOWAK

STATE OF CALIFORNIA - DEPARTMENT OF TRANSPORTATION
Caltrans

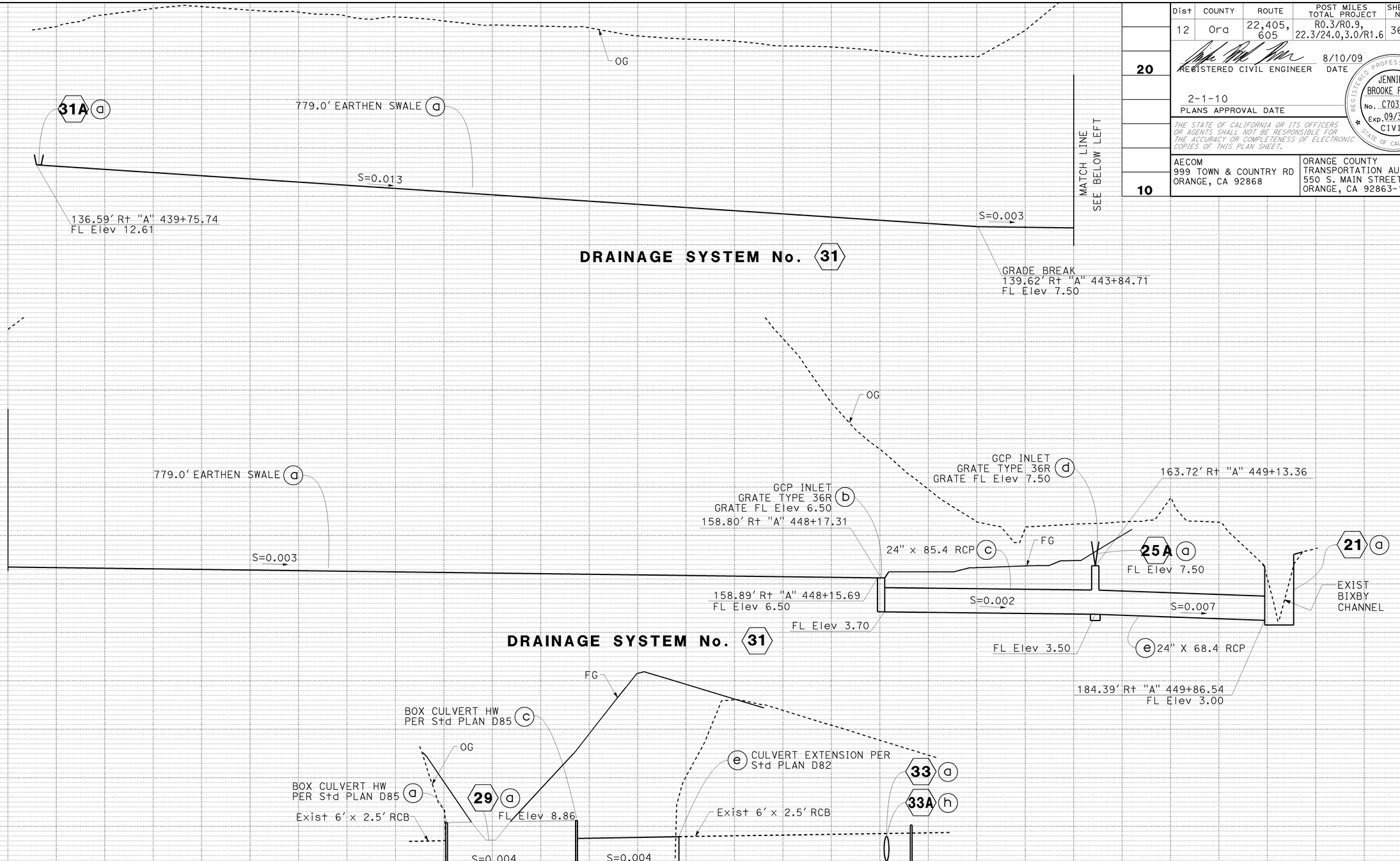

DRAINAGE PROFILE

SCALE: Horiz 1" = 20'
Vert 1" = 4'

DP-22

LAST REVISION: DATE PLOTTED => 03-FEB-2010
08-10-09 TIME PLOTTED => 08:45

BORDER LAST REVISED 8/1/2008

RELATIVE BORDER SCALE IS IN INCHES 0 1 2 3

USERNAME => trmikesl
DGN FILE => c07163ib022.dgn

CU 12235

EA 071631

Dist	COUNTY	ROUTE	POST MILES TOTAL PROJECT	SHEET No.	TOTAL SHEETS
12	Ora	22,405, 605	R0.3/R0.9, 22.3/24.0,3.0/R1.6	369	1929

REGISTERED CIVIL ENGINEER — 8/10/09 DATE

2-1-10
PLANS APPROVAL DATE

REGISTERED PROFESSIONAL ENGINEER — JENNIFER BROOKE RIVERA — No. C70332 — Exp. 09/30/10 CIVIL — STATE OF CALIFORNIA

THE STATE OF CALIFORNIA OR ITS OFFICERS OR AGENTS SHALL NOT BE RESPONSIBLE FOR THE ACCURACY OR COMPLETENESS OF ELECTRONIC COPIES OF THIS PLAN SHEET.

AECOM
999 TOWN & COUNTRY RD
ORANGE, CA 92868

ORANGE COUNTY
TRANSPORTATION AUTHORITY
550 S. MAIN STREET
ORANGE, CA 92863-1584

HMAOD TABLE

SYSTEM No.	INLET Elev	OUTLET Elev
31A	14.12	12.61

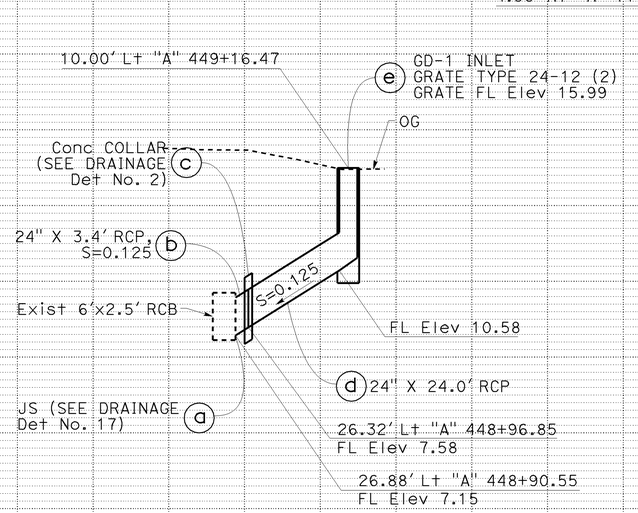

DRAINAGE SYSTEM No. 33

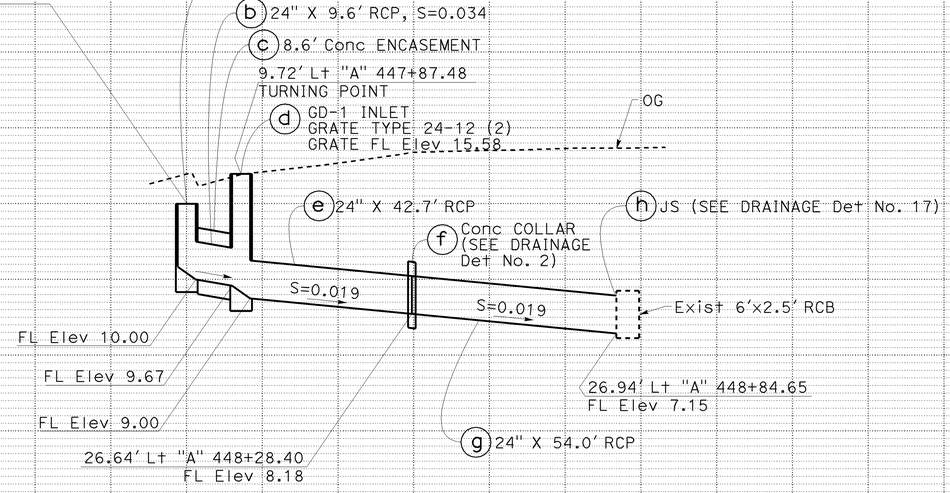

DRAINAGE SYSTEM No. 33A

DRAINAGE PROFILE

SCALE: Horiz 1" = 20'
Vert 1" = 4'

DP-23

REVISED BY: DUC TRAN — DATE REVISED: 8/10/09
CALCULATED-DESIGNED BY: RASHOD GIBSON
CHECKED BY: BROOKE RIVERA
CONSULTANT FUNCTIONAL SUPERVISOR: ANDRZEJ NOWAK
STATE OF CALIFORNIA - DEPARTMENT OF TRANSPORTATION — Caltrans

LAST REVISION DATE PLOTTED => 03-FEB-2010
TIME PLOTTED => 08:45
08-10-09

BORDER LAST REVISED 8/1/2008
RELATIVE BORDER SCALE IS IN INCHES 0 1 2 3
USERNAME => trmikesl
DGN FILE => c07163ib023.dgn
CU 12235
EA 071631

Dist	COUNTY	ROUTE	POST MILES TOTAL PROJECT	SHEET No.	TOTAL SHEETS
12	Ora	22,405, 605	R0.3/R0.9, 22.3/24.0,3.0/R1.6	370	1929

REGISTERED CIVIL ENGINEER — 8/10/09 DATE

JENNIFER BROOKE RIVERA No. C70332 Exp.09/30/10 CIVIL — REGISTERED PROFESSIONAL ENGINEER — STATE OF CALIFORNIA

2-1-10
PLANS APPROVAL DATE

THE STATE OF CALIFORNIA OR ITS OFFICERS OR AGENTS SHALL NOT BE RESPONSIBLE FOR THE ACCURACY OR COMPLETENESS OF ELECTRONIC COPIES OF THIS PLAN SHEET.

AECOM
999 TOWN & COUNTRY RD
ORANGE, CA 92868

ORANGE COUNTY
TRANSPORTATION AUTHORITY
550 S. MAIN STREET
ORANGE, CA 92863-1584

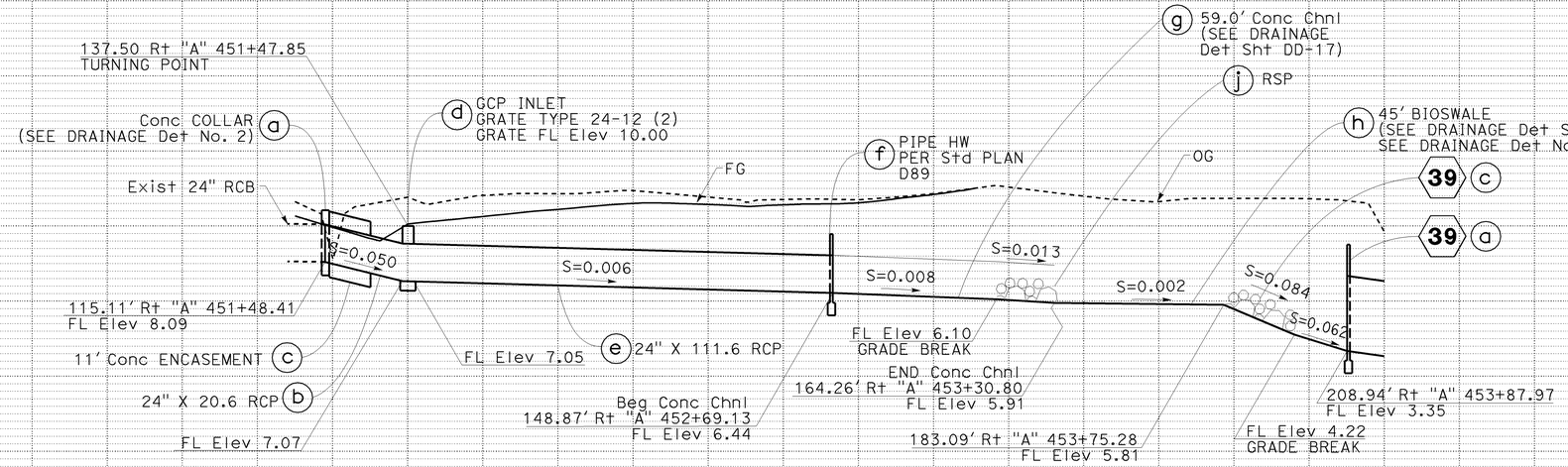

DRAINAGE SYSTEM No. 34

SEE Det 11

HMAOD TABLE

SYSTEM No.	INLET Elev	OUTLET Elev
35A	11.85	11.19

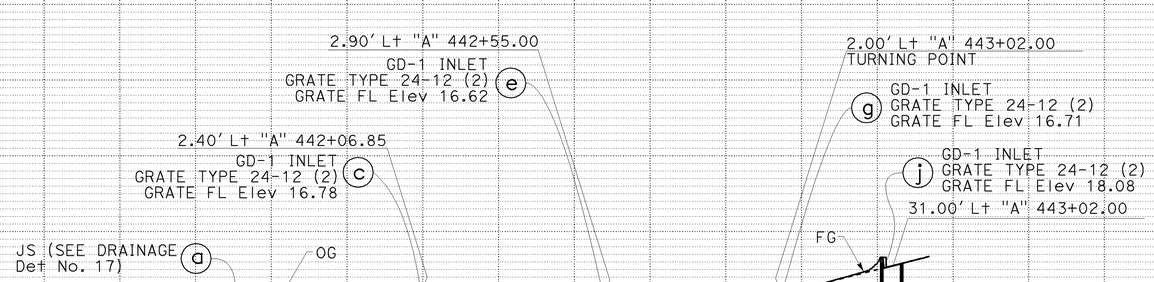

DRAINAGE SYSTEM No. 34A

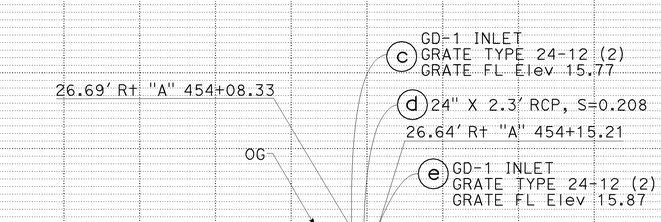

DRAINAGE SYSTEM No. 36

DRAINAGE PROFILE

SCALE: Horiz 1" = 20'
Vert 1" = 4'

DP-24

STATE OF CALIFORNIA - DEPARTMENT OF TRANSPORTATION
CONSULTANT FUNCTIONAL SUPERVISOR: ANDRZEJ NOWAK
CALCULATED-DESIGNED BY: RASHOD GIBSON
CHECKED BY: BROOKE RIVERA
REVISED BY: DUC TRAN
DATE REVISED: 8/10/09

LAST REVISION DATE PLOTTED => 03-FEB-2010
TIME PLOTTED => 08:45
08-10-09

BORDER LAST REVISED 8/1/2008
RELATIVE BORDER SCALE IS IN INCHES 0 1 2 3
USERNAME => trmikesl
DGN FILE => c07163ib024.dgn
CU 12235
EA 071631

Dist	COUNTY	ROUTE	POST MILES TOTAL PROJECT	SHEET No.	TOTAL SHEETS
12	Ora	22,405, 605	R0.3/R0.9, 22.3/24.0,3.0/R1.6	371	1929

REGISTERED CIVIL ENGINEER — DATE 8/10/09

JENNIFER BROOKE RIVERA
No. C70332
Exp. 09/30/10
CIVIL
REGISTERED PROFESSIONAL ENGINEER
STATE OF CALIFORNIA

2-1-10
PLANS APPROVAL DATE

THE STATE OF CALIFORNIA OR ITS OFFICERS OR AGENTS SHALL NOT BE RESPONSIBLE FOR THE ACCURACY OR COMPLETENESS OF ELECTRONIC COPIES OF THIS PLAN SHEET.

AECOM
999 TOWN & COUNTRY RD
ORANGE, CA 92868

ORANGE COUNTY
TRANSPORTATION AUTHORITY
550 S. MAIN STREET
ORANGE, CA 92863-1584

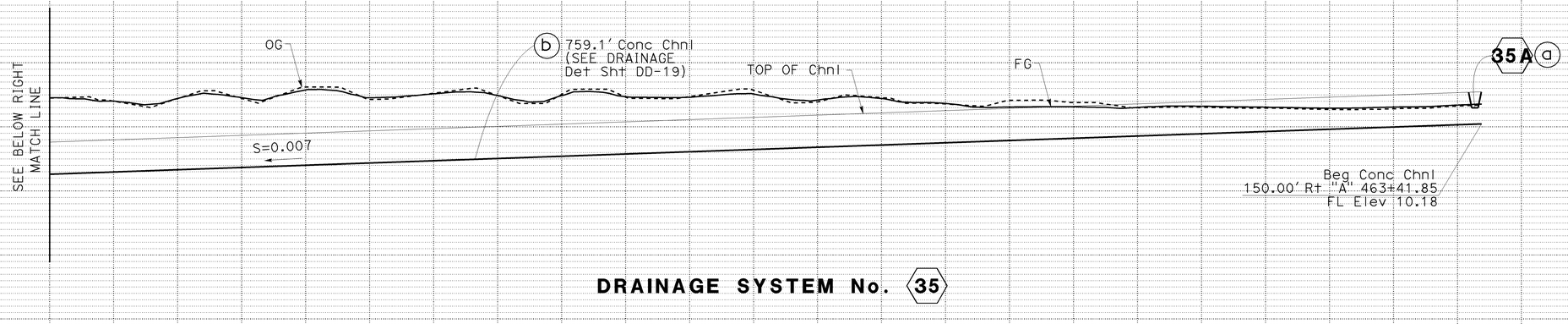

DRAINAGE SYSTEM No. 35

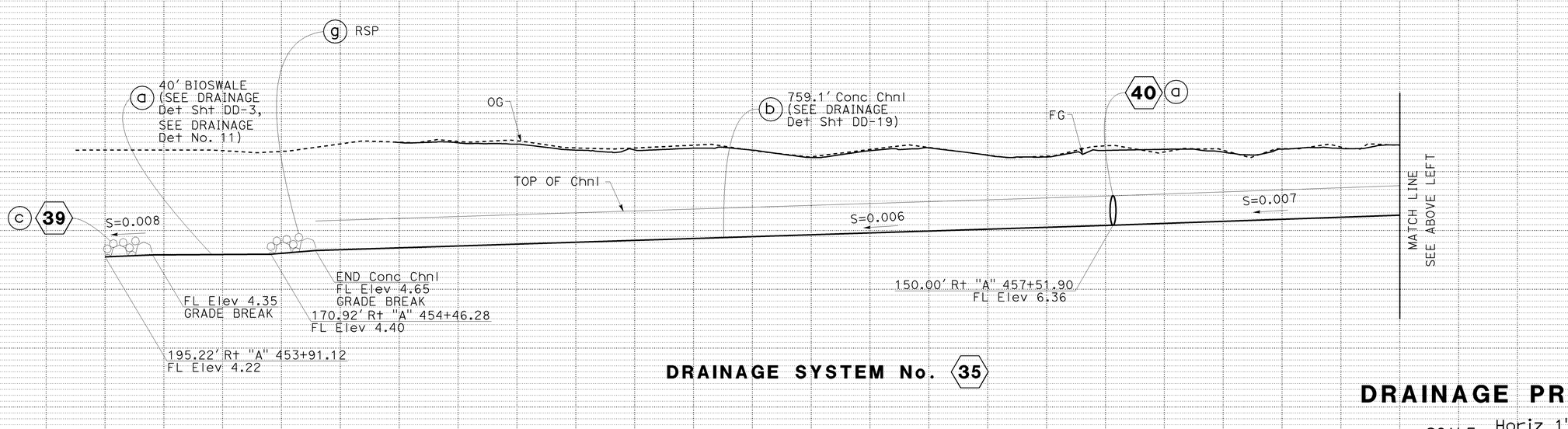

DRAINAGE SYSTEM No. 35

DRAINAGE PROFILE

SCALE: Horiz 1" = 20'
Vert 1" = 4'

DP-25

REVISED BY: DUC TRAN — DATE REVISED: 8/10/09
CALCULATED-DESIGNED BY: RASHOD GIBSON
CHECKED BY: BROOKE RIVERA
CONSULTANT FUNCTIONAL SUPERVISOR: ANDRZEJ NOWAK
STATE OF CALIFORNIA - DEPARTMENT OF TRANSPORTATION

LAST REVISION — DATE PLOTTED => 03-FEB-2010
08-10-09 — TIME PLOTTED => 08:45

BORDER LAST REVISED 8/1/2008
RELATIVE BORDER SCALE IS IN INCHES 0 1 2 3
USERNAME => trmikesl
DGN FILE => c071631b025.dgn
CU 12235
EA 071631

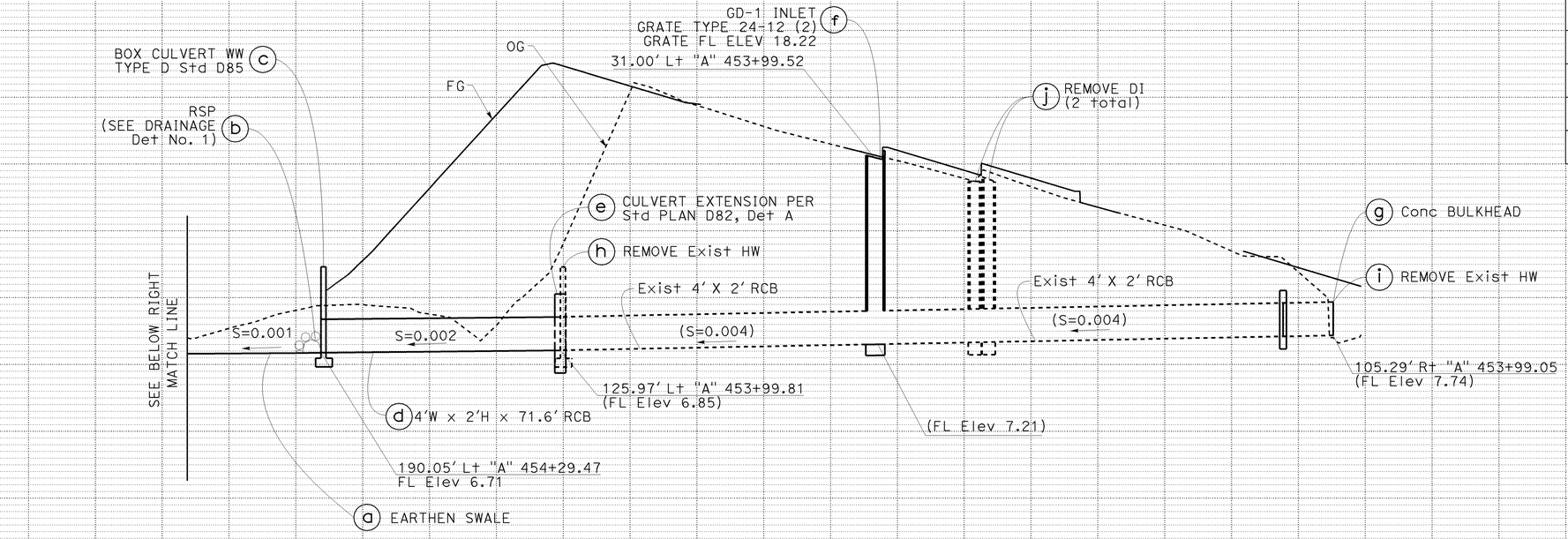

DRAINAGE SYSTEM No. 37

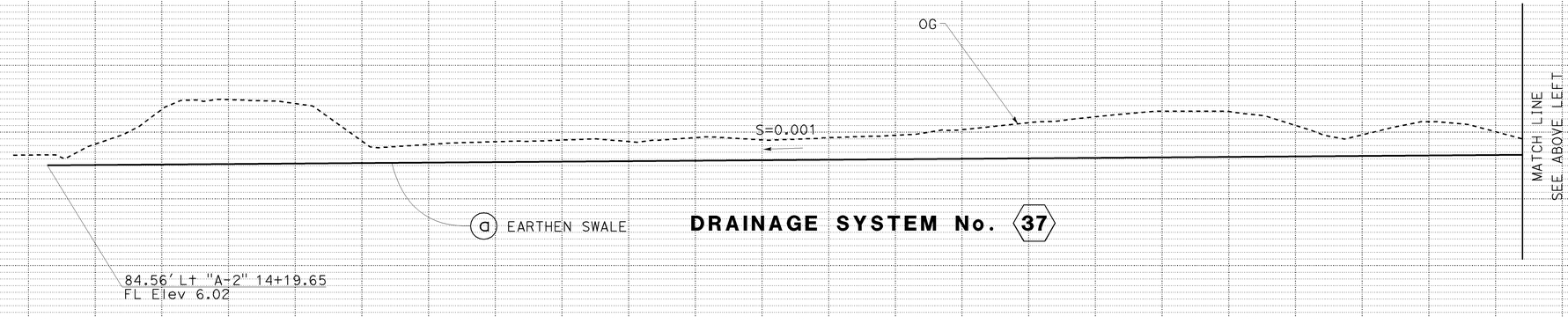

DRAINAGE SYSTEM No. 37

DRAINAGE PROFILE

SCALE: Horiz 1" = 20'
Vert 1" = 4'

DP-26

Dist	COUNTY	ROUTE	POST MILES TOTAL PROJECT	SHEET No.	TOTAL SHEETS
12	Ora	22,405, 605	R0.3/R0.9, 22.3/24.0,3.0/R1.6	372	1929

REGISTERED CIVIL ENGINEER — DATE 8/10/09

JENNIFER BROOKE RIVERA No. C70332 Exp.09/30/10 CIVIL — REGISTERED PROFESSIONAL ENGINEER — STATE OF CALIFORNIA

2-1-10
PLANS APPROVAL DATE

THE STATE OF CALIFORNIA OR ITS OFFICERS OR AGENTS SHALL NOT BE RESPONSIBLE FOR THE ACCURACY OR COMPLETENESS OF ELECTRONIC COPIES OF THIS PLAN SHEET.

AECOM
999 TOWN & COUNTRY RD
ORANGE, CA 92868

ORANGE COUNTY
TRANSPORTATION AUTHORITY
550 S. MAIN STREET
ORANGE, CA 92863-1584

REVISED BY	DATE REVISED
DUC TRAN	8/10/09

CALCULATED-DESIGNED BY: RASHOD GIBSON
CHECKED BY: BROOKE RIVERA
CONSULTANT FUNCTIONAL SUPERVISOR: ANDRZEJ NOWAK

STATE OF CALIFORNIA - DEPARTMENT OF TRANSPORTATION
Caltrans

LAST REVISION DATE PLOTTED => 03-FEB-2010
TIME PLOTTED => 08:45
08-10-09

BORDER LAST REVISED 8/1/2008
RELATIVE BORDER SCALE IS IN INCHES 0 1 2 3
USERNAME => trmikesl
DGN FILE => c071631b026.dgn
CU 12235
EA 071631

Dist	COUNTY	ROUTE	POST MILES TOTAL PROJECT	SHEET No.	TOTAL SHEETS
12	Ora	22,405, 605	R0.3/R0.9, 22.3/24.0,3.0/R1.6	373	1929

REGISTERED CIVIL ENGINEER — 8/10/09 DATE

JENNIFER BROOKE RIVERA No. C70332 Exp.09/30/10 CIVIL — REGISTERED PROFESSIONAL ENGINEER — STATE OF CALIFORNIA

2-1-10
PLANS APPROVAL DATE

THE STATE OF CALIFORNIA OR ITS OFFICERS OR AGENTS SHALL NOT BE RESPONSIBLE FOR THE ACCURACY OR COMPLETENESS OF ELECTRONIC COPIES OF THIS PLAN SHEET.

AECOM
999 TOWN & COUNTRY RD
ORANGE, CA 92868

ORANGE COUNTY TRANSPORTATION AUTHORITY
550 S. MAIN STREET
ORANGE, CA 92863-1584

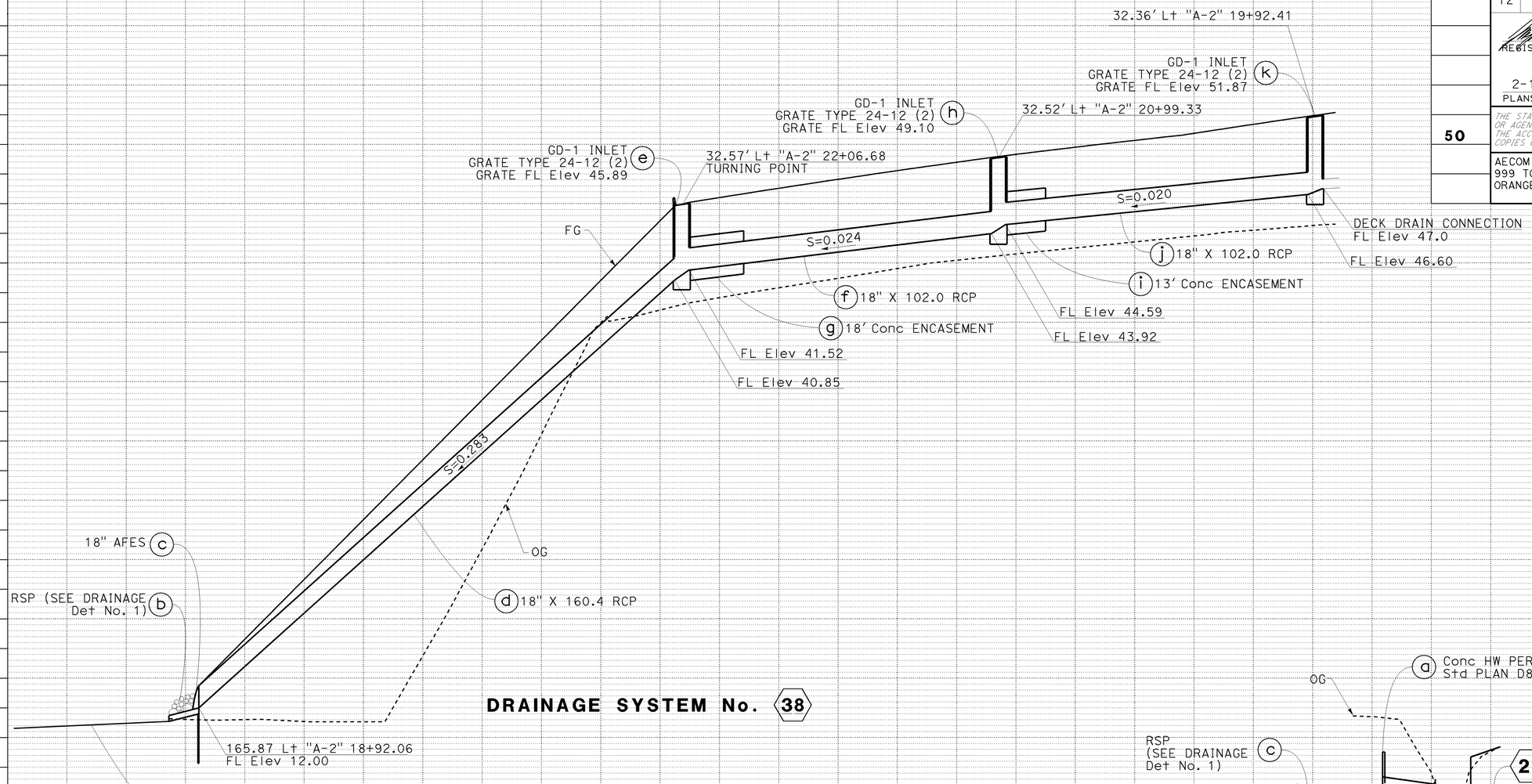

DRAINAGE SYSTEM No. 38

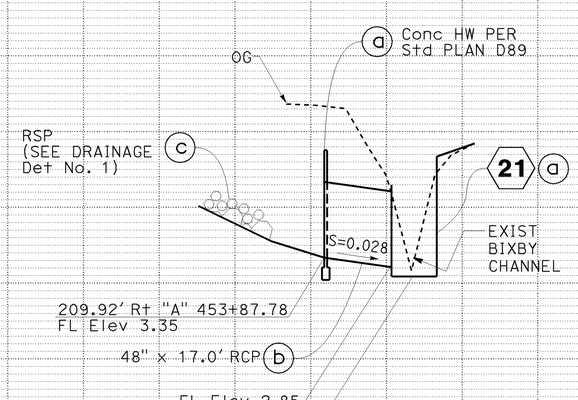

DRAINAGE SYSTEM No. 39
(SEE DRAINAGE Det No. 11)

* = MEASURED TO ℄ INTERSECTION 48" RCP AND BIXBY CHANNEL

DRAINAGE PROFILE

SCALE: Horiz 1" = 20'
Vert 1" = 4'

DP-27

STATE OF CALIFORNIA - DEPARTMENT OF TRANSPORTATION
CONSULTANT FUNCTIONAL SUPERVISOR: ANDRZEJ NOWAK
CALCULATED-DESIGNED BY: RASHOD GIBSON
CHECKED BY: BROOKE RIVERA
REVISED BY: DUC TRAN
DATE REVISED: 8/10/09

LAST REVISION DATE PLOTTED => 03-FEB-2010
LAST REVISION TIME PLOTTED => 08:45
08-10-09

Dist	COUNTY	ROUTE	POST MILES TOTAL PROJECT	SHEET No.	TOTAL SHEETS
12	Ora	22,405, 605	R0.3/R0.9, 22.3/24.0,3.0/R1.6	374	1929

REGISTERED CIVIL ENGINEER — 8/10/09 DATE

JENNIFER BROOKE RIVERA No. C70332 Exp.09/30/10 CIVIL — REGISTERED PROFESSIONAL ENGINEER — STATE OF CALIFORNIA

2-1-10
PLANS APPROVAL DATE

THE STATE OF CALIFORNIA OR ITS OFFICERS OR AGENTS SHALL NOT BE RESPONSIBLE FOR THE ACCURACY OR COMPLETENESS OF ELECTRONIC COPIES OF THIS PLAN SHEET.

AECOM
999 TOWN & COUNTRY RD
ORANGE, CA 92868

ORANGE COUNTY TRANSPORTATION AUTHORITY
550 S. MAIN STREET
ORANGE, CA 92863-1584

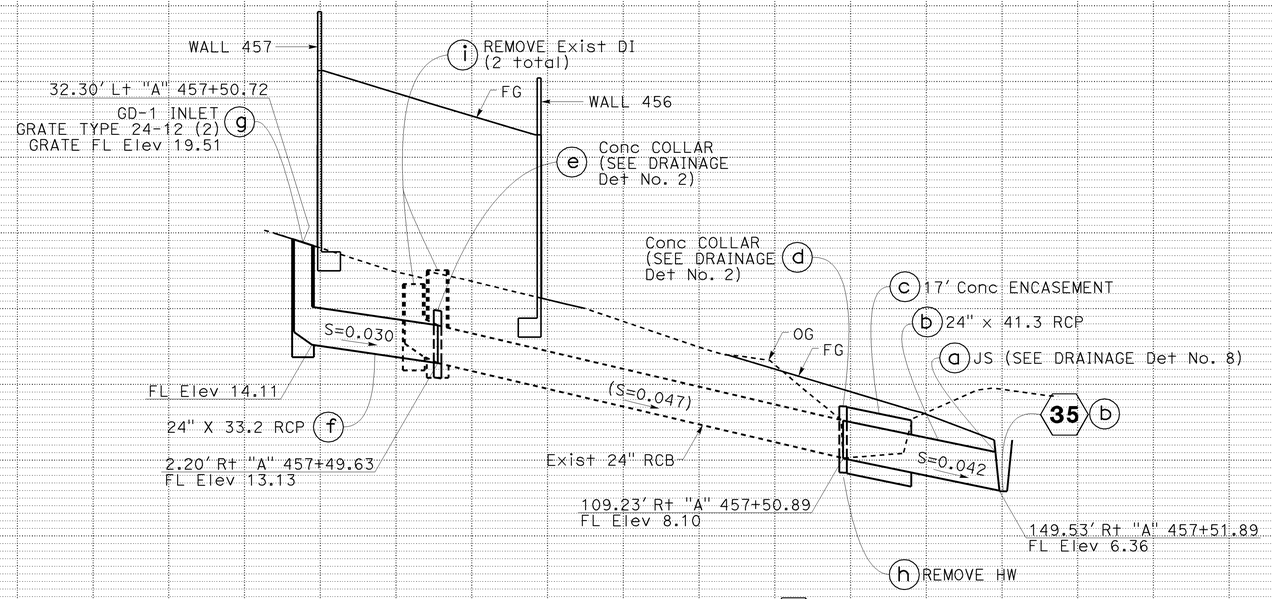

DRAINAGE SYSTEM No. 40

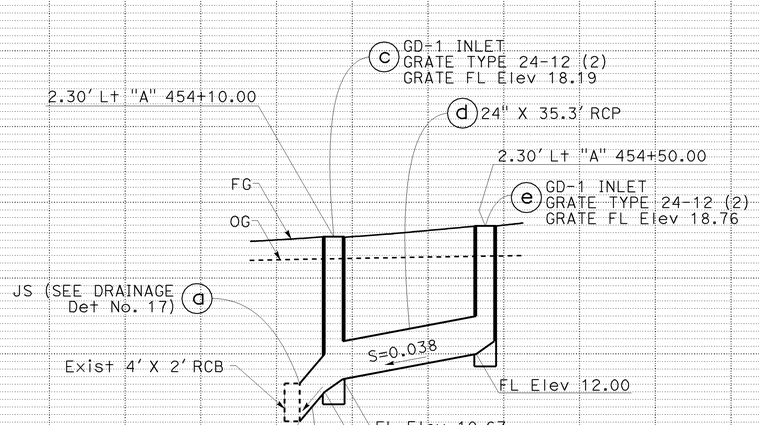

DRAINAGE SYSTEM No. 41

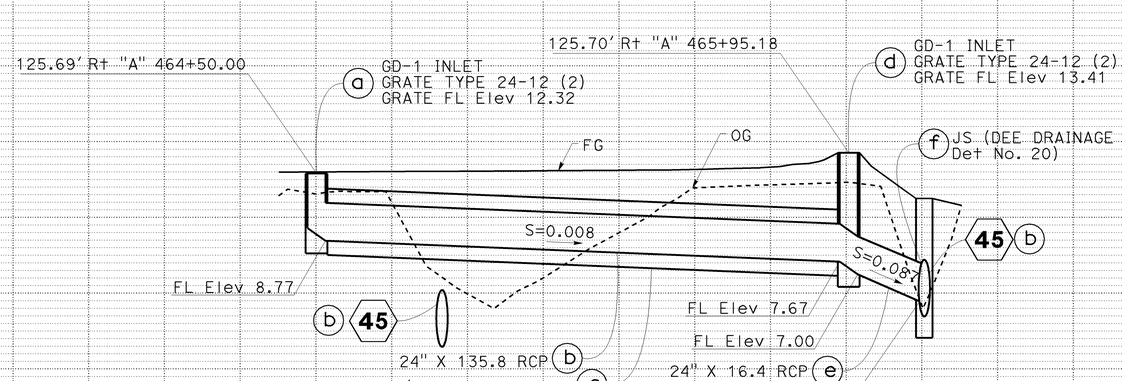

DRAINAGE SYSTEM No. 42

DRAINAGE PROFILE

SCALE: Horiz 1" = 20'
Vert 1" = 4'

DP-28

STATE OF CALIFORNIA - DEPARTMENT OF TRANSPORTATION
CONSULTANT FUNCTIONAL SUPERVISOR: ANDRZEJ NOWAK
CALCULATED-DESIGNED BY: RASHOD GIBSON
CHECKED BY: BROOKE RIVERA
REVISED BY: DUC TRAN
DATE REVISED: 8/10/09

LAST REVISION DATE PLOTTED => 03-FEB-2010
TIME PLOTTED => 08:45
08-10-09

BORDER LAST REVISED 8/1/2008
RELATIVE BORDER SCALE IS IN INCHES 0 1 2 3
USERNAME => trmikesl
DGN FILE => c07163ib028.dgn
CU 12235
EA 071631

Dist	COUNTY	ROUTE	POST MILES TOTAL PROJECT	SHEET No.	TOTAL SHEETS
12	Ora	22,405, 605	R0.3/R0.9, 22.3/24.0,3.0/R1.6	375	1929

REGISTERED CIVIL ENGINEER — 8/10/09 DATE

JENNIFER BROOKE RIVERA No. C70332 Exp.09/30/10 CIVIL — REGISTERED PROFESSIONAL ENGINEER — STATE OF CALIFORNIA

2-1-10
PLANS APPROVAL DATE

THE STATE OF CALIFORNIA OR ITS OFFICERS OR AGENTS SHALL NOT BE RESPONSIBLE FOR THE ACCURACY OR COMPLETENESS OF ELECTRONIC COPIES OF THIS PLAN SHEET.

AECOM
999 TOWN & COUNTRY RD
ORANGE, CA 92868

ORANGE COUNTY TRANSPORTATION AUTHORITY
550 S. MAIN STREET
ORANGE, CA 92863-1584

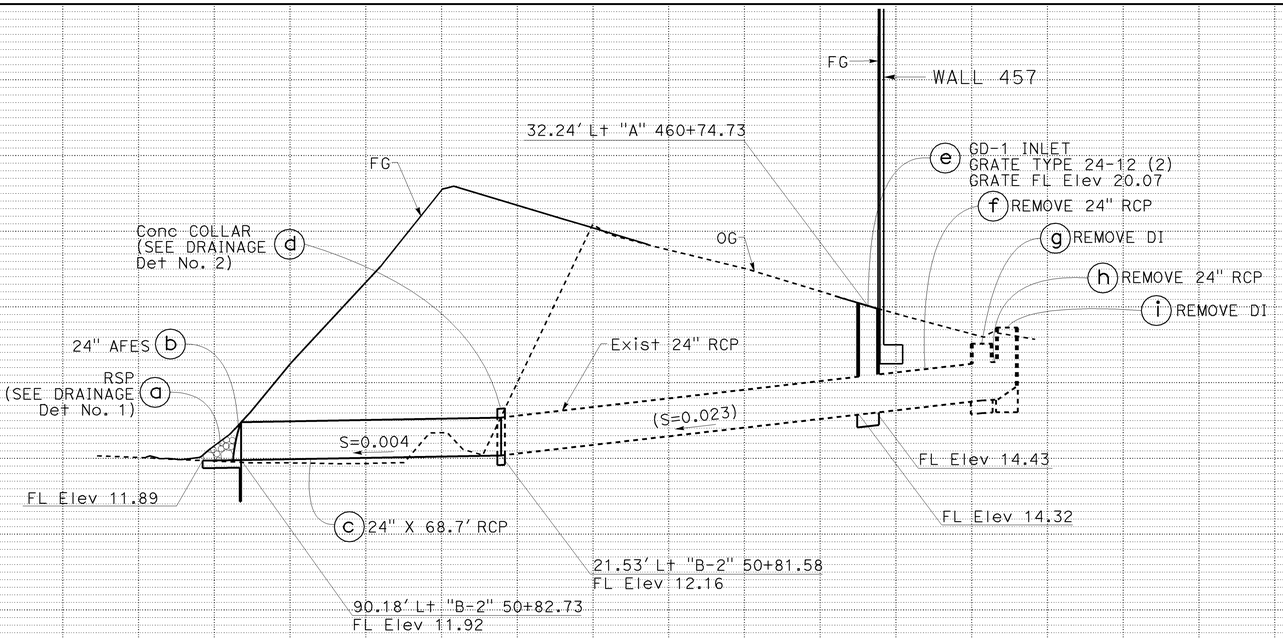

DRAINAGE SYSTEM No. 43

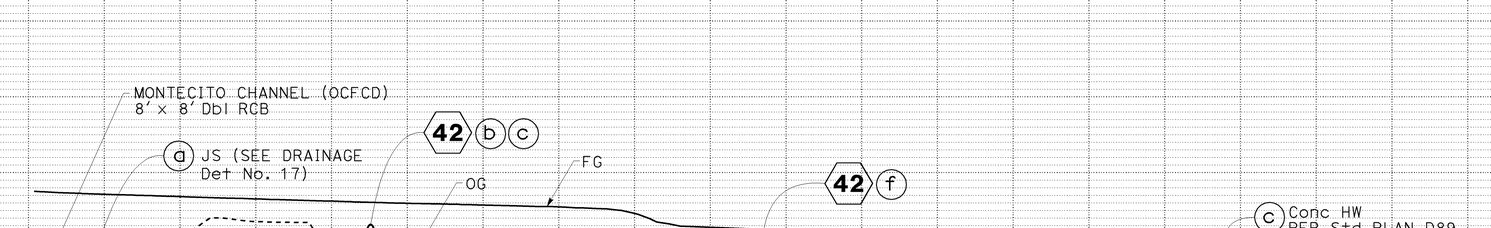

DRAINAGE SYSTEM No. 45

DRAINAGE PROFILE

SCALE: Horiz 1" = 20'
Vert 1" = 4'

DP-29

REVISED BY: DUC TRAN — DATE REVISED: 8/10/09
CALCULATED-DESIGNED BY: RASHOD GIBSON
CHECKED BY: BROOKE RIVERA
CONSULTANT FUNCTIONAL SUPERVISOR: ANDRZEJ NOWAK
STATE OF CALIFORNIA - DEPARTMENT OF TRANSPORTATION — Caltrans

LAST REVISION 08-10-09 — DATE PLOTTED => 03-FEB-2010 — TIME PLOTTED => 08:45

BORDER LAST REVISED 8/1/2008 — RELATIVE BORDER SCALE IS IN INCHES 0 1 2 3 — USERNAME => trmikesl — DGN FILE => c07163ib029.dgn — CU 12235 — EA 071631

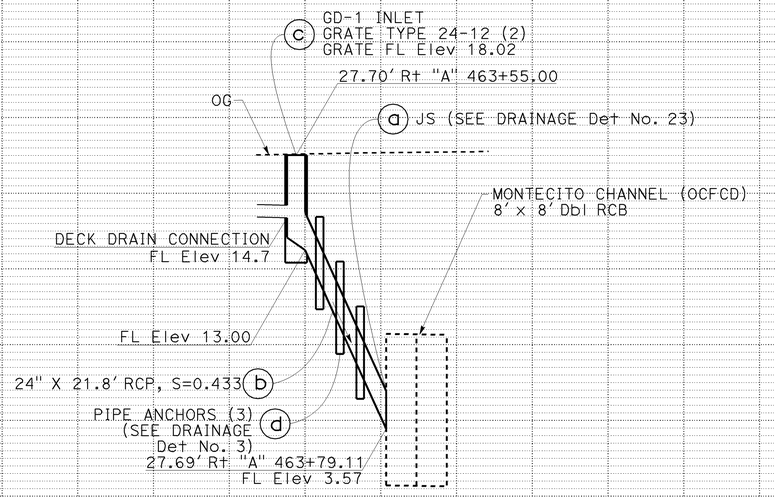

DRAINAGE SYSTEM No. 44A

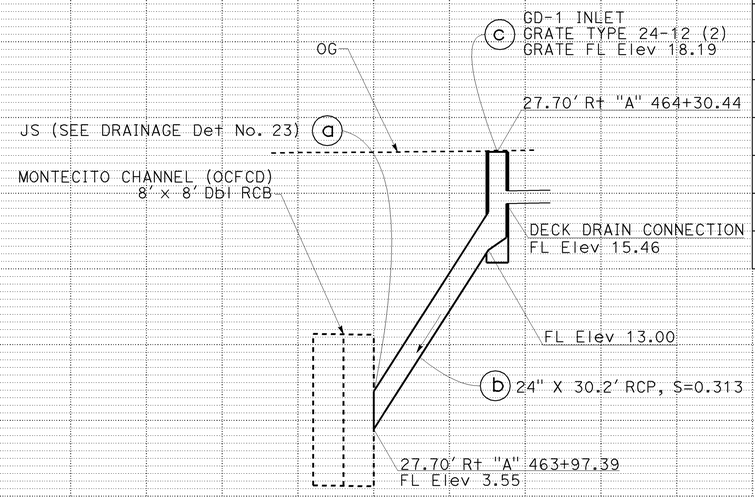

DRAINAGE SYSTEM No. 44B

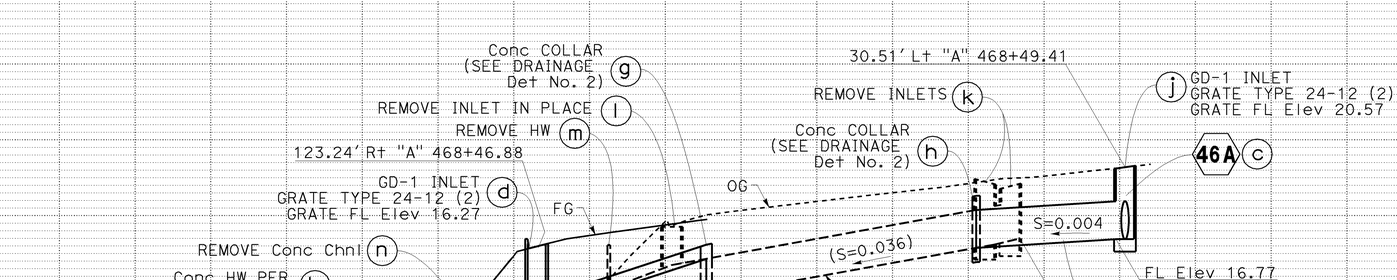

DRAINAGE SYSTEM No. 46

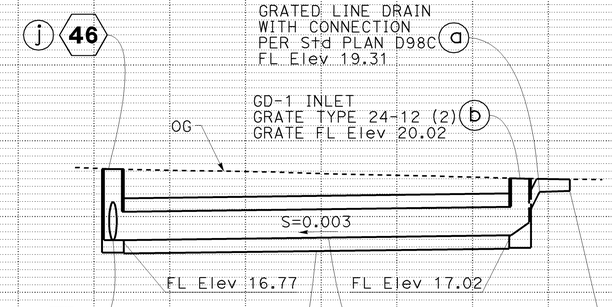

DRAINAGE SYSTEM No. 46A

DRAINAGE PROFILE

SCALE: Horiz 1" = 20'
Vert 1" = 4'

DP-30

Dist	COUNTY	ROUTE	POST MILES TOTAL PROJECT	SHEET No.	TOTAL SHEETS
12	Ora	22,405, 605	R0.3/R0.9, 22.3/24.0,3.0/R1.6	376	1929

REGISTERED CIVIL ENGINEER — 8/10/09 DATE

JENNIFER BROOKE RIVERA No. C70332 Exp.09/30/10 CIVIL — REGISTERED PROFESSIONAL ENGINEER — STATE OF CALIFORNIA

2-1-10
PLANS APPROVAL DATE

THE STATE OF CALIFORNIA OR ITS OFFICERS OR AGENTS SHALL NOT BE RESPONSIBLE FOR THE ACCURACY OR COMPLETENESS OF ELECTRONIC COPIES OF THIS PLAN SHEET.

AECOM
999 TOWN & COUNTRY RD
ORANGE, CA 92868

ORANGE COUNTY
TRANSPORTATION AUTHORITY
550 S. MAIN STREET
ORANGE, CA 92863-1584

REVISED BY	DATE REVISED
DUC TRAN	8/10/09

CALCULATED-DESIGNED BY: RASHOD GIBSON
CHECKED BY: BROOKE RIVERA
CONSULTANT FUNCTIONAL SUPERVISOR: ANDRZEJ NOWAK
STATE OF CALIFORNIA - DEPARTMENT OF TRANSPORTATION
Caltrans

LAST REVISION DATE PLOTTED => 03-FEB-2010
TIME PLOTTED => 08:46
08-10-09

BORDER LAST REVISED 8/1/2008
RELATIVE BORDER SCALE IS IN INCHES 0 1 2 3
USERNAME => trmikesl
DGN FILE => c07163ib030.dgn
CU 12235
EA 071631

Dist	COUNTY	ROUTE	POST MILES TOTAL PROJECT	SHEET No.	TOTAL SHEETS
12	Ora	22,405, 605	R0.3/R0.9, 22.3/24.0,3.0/R1.6	377	1929

REGISTERED CIVIL ENGINEER — DATE 8/10/09

JENNIFER BROOKE RIVERA, No. C70332, Exp. 09/30/10 CIVIL — REGISTERED PROFESSIONAL ENGINEER — STATE OF CALIFORNIA

2-1-10
PLANS APPROVAL DATE

THE STATE OF CALIFORNIA OR ITS OFFICERS OR AGENTS SHALL NOT BE RESPONSIBLE FOR THE ACCURACY OR COMPLETENESS OF ELECTRONIC COPIES OF THIS PLAN SHEET.

AECOM
999 TOWN & COUNTRY RD
ORANGE, CA 92868

ORANGE COUNTY
TRANSPORTATION AUTHORITY
550 S. MAIN STREET
ORANGE, CA 92863-1584

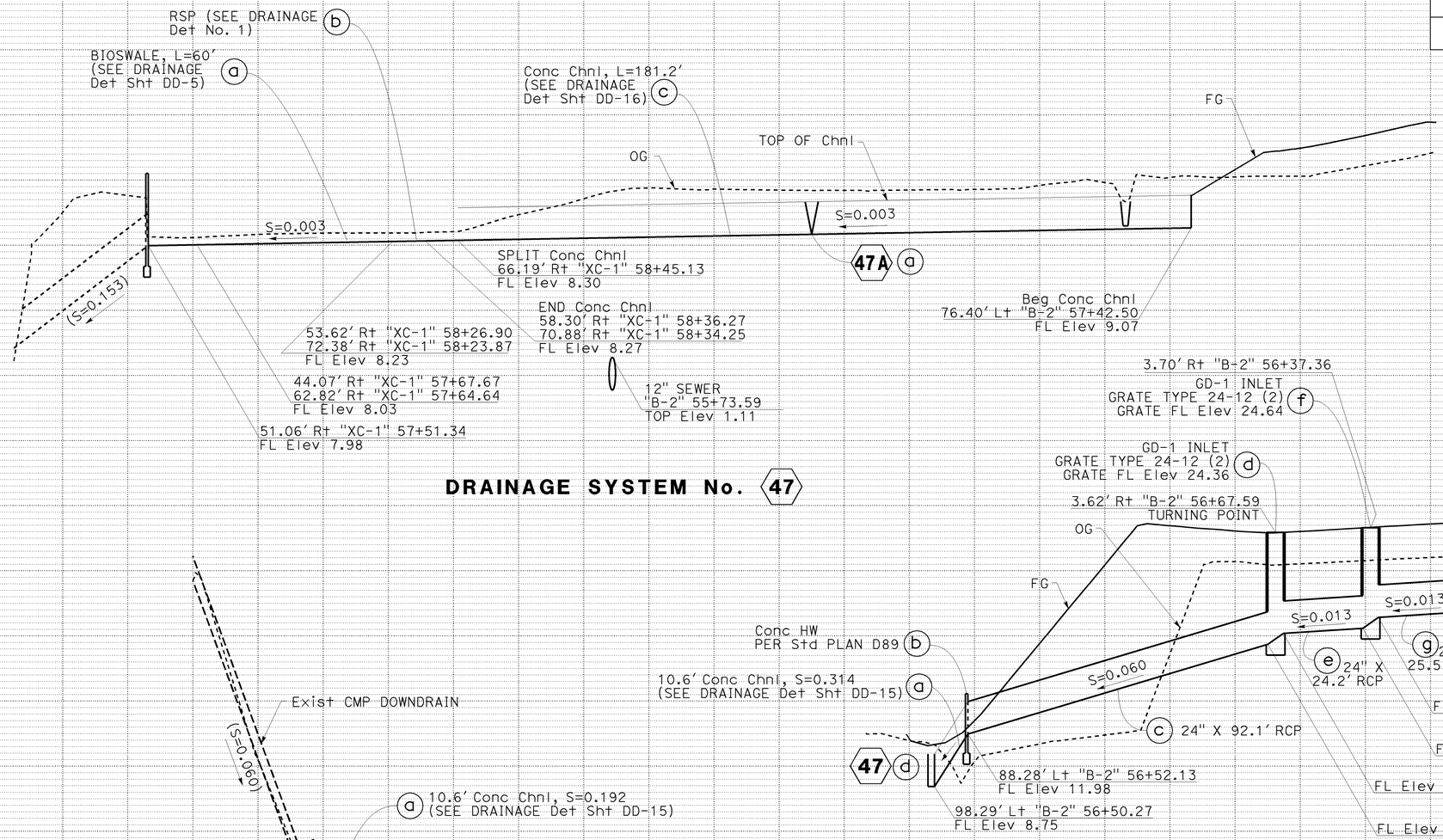

DRAINAGE SYSTEM No. 47

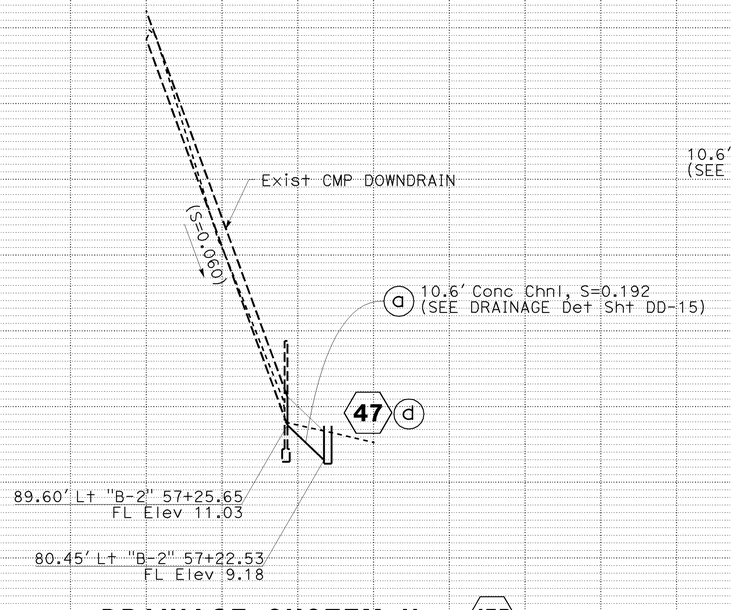

DRAINAGE SYSTEM No. 47B

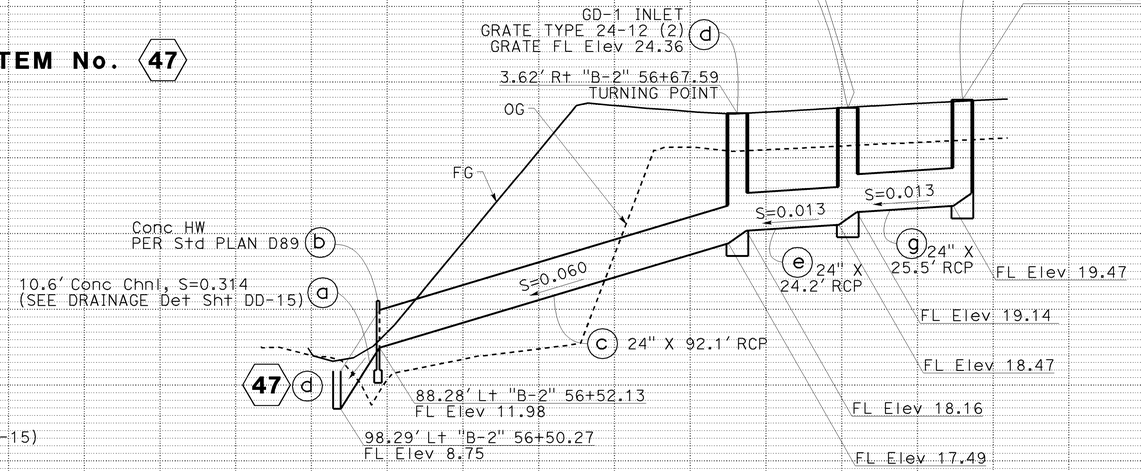

DRAINAGE SYSTEM No. 47A

DRAINAGE PROFILE

SCALE: Horiz 1" = 20'
Vert 1" = 4'

DP-31

DUC TRAN — REVISED BY — 8/10/09 — DATE REVISED
RASHOD GIBSON — BROOKE RIVERA — CALCULATED-DESIGNED BY — CHECKED BY
CONSULTANT FUNCTIONAL SUPERVISOR — ANDRZEJ NOWAK
STATE OF CALIFORNIA - DEPARTMENT OF TRANSPORTATION — Caltrans

DATE PLOTTED => 03-FEB-2010
TIME PLOTTED => 11:12
LAST REVISION 08-10-09

BORDER LAST REVISED 8/1/2008 — RELATIVE BORDER SCALE IS IN INCHES 0 1 2 3 — USERNAME => trmnguye — DGN FILE => c07163ib031.dgn — CU 12235 — EA 071631

Dist	COUNTY	ROUTE	POST MILES TOTAL PROJECT	SHEET No.	TOTAL SHEETS
12	Ora	22,405, 605	R0.3/R0.9, 22.3/24.0,3.0/R1.6	378	1929

REGISTERED CIVIL ENGINEER — 8/10/09 DATE

2-1-10
PLANS APPROVAL DATE

REGISTERED PROFESSIONAL ENGINEER — JENNIFER BROOKE RIVERA — No. C70332 — Exp. 09/30/10 CIVIL — STATE OF CALIFORNIA

THE STATE OF CALIFORNIA OR ITS OFFICERS OR AGENTS SHALL NOT BE RESPONSIBLE FOR THE ACCURACY OR COMPLETENESS OF ELECTRONIC COPIES OF THIS PLAN SHEET.

AECOM
999 TOWN & COUNTRY RD
ORANGE, CA 92868

ORANGE COUNTY
TRANSPORTATION AUTHORITY
550 S. MAIN STREET
ORANGE, CA 92863-1584

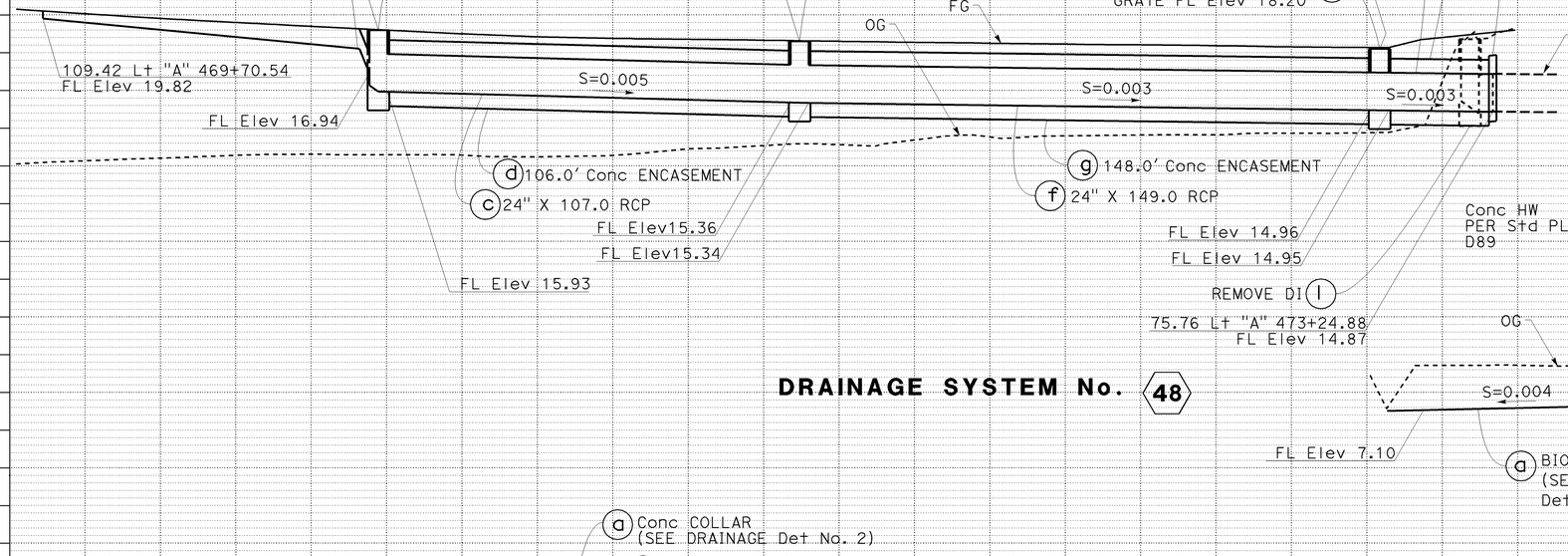

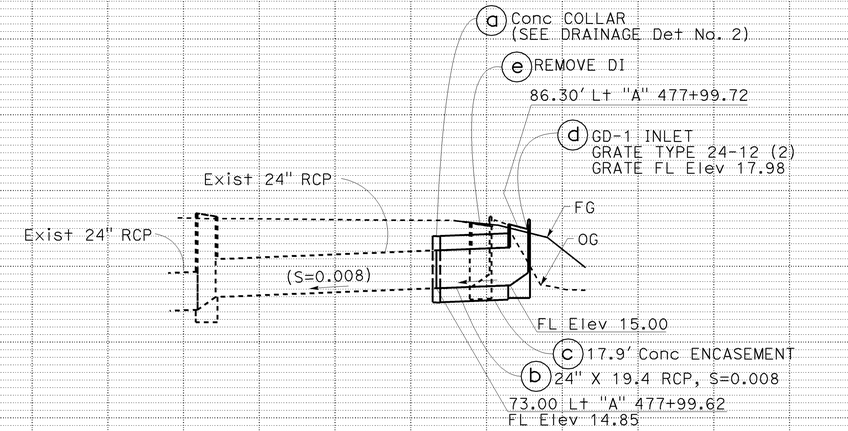

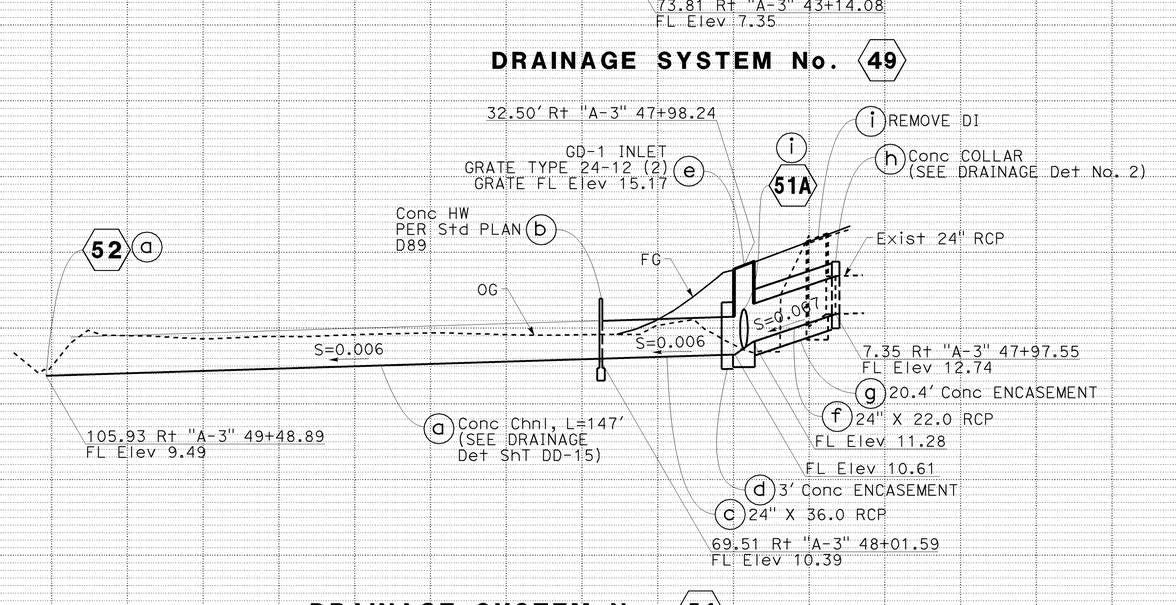

DRAINAGE PROFILE

SCALE: Horiz 1" = 20'
Vert 1" = 4'

DP-32

REVISED BY: DUC TRAN — DATE REVISED: 8/10/09
CALCULATED-DESIGNED BY: RASHOD GIBSON — CHECKED BY: BROOKE RIVERA
CONSULTANT FUNCTIONAL SUPERVISOR: ANDRZEJ NOWAK
STATE OF CALIFORNIA - DEPARTMENT OF TRANSPORTATION — Caltrans

LAST REVISION — DATE PLOTTED => 03-FEB-2010 — TIME PLOTTED => 11:12
08-10-09

BORDER LAST REVISED 8/1/2008 — RELATIVE BORDER SCALE IS IN INCHES 0 1 2 3 — USERNAME => trmnguye — DGN FILE => c07163ib032.dgn — CU 12235 — EA 071631

Dist	COUNTY	ROUTE	POST MILES TOTAL PROJECT	SHEET No.	TOTAL SHEETS
12	Ora	22,405, 605	R0.3/R0.9, 22.3/24.0,3.0/R1.6	379	1929

REGISTERED CIVIL ENGINEER — 8/10/09 DATE

JENNIFER BROOKE RIVERA No. C70332 Exp.09/30/10 CIVIL — REGISTERED PROFESSIONAL ENGINEER — STATE OF CALIFORNIA

2-1-10
PLANS APPROVAL DATE

THE STATE OF CALIFORNIA OR ITS OFFICERS OR AGENTS SHALL NOT BE RESPONSIBLE FOR THE ACCURACY OR COMPLETENESS OF ELECTRONIC COPIES OF THIS PLAN SHEET.

AECOM
999 TOWN & COUNTRY RD
ORANGE, CA 92868

ORANGE COUNTY TRANSPORTATION AUTHORITY
550 S. MAIN STREET
ORANGE, CA 92863-1584

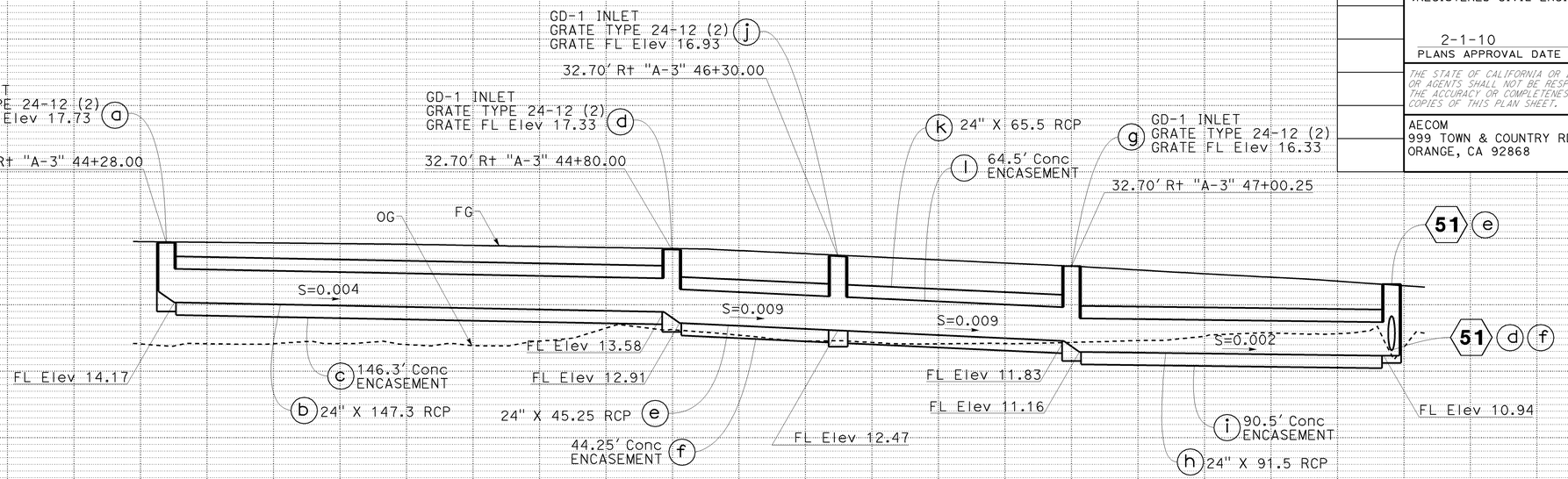

DRAINAGE SYSTEM No. 51A

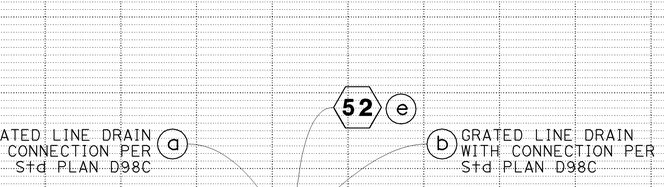

DRAINAGE SYSTEM No. 52T

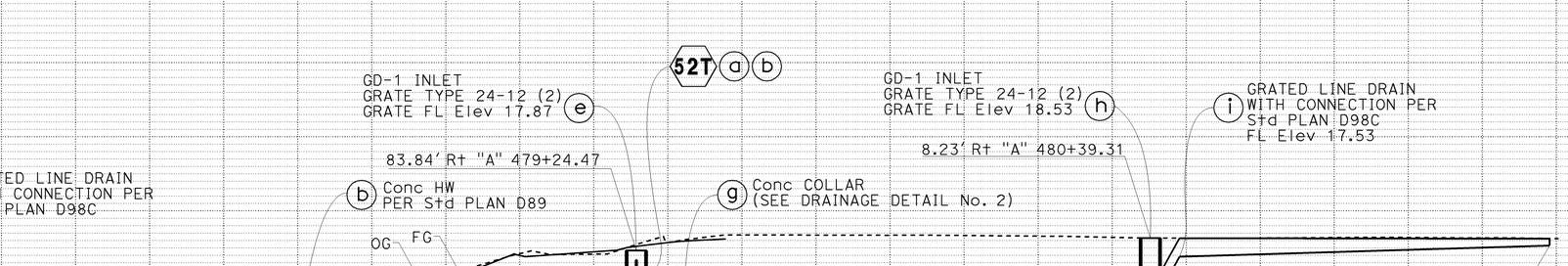

DRAINAGE SYSTEM No. 52

DRAINAGE PROFILE

SCALE: Horiz 1" = 20'
Vert 1" = 4'

DP-33

STATE OF CALIFORNIA - DEPARTMENT OF TRANSPORTATION
CONSULTANT FUNCTIONAL SUPERVISOR: ANDRZEJ NOWAK
CALCULATED-DESIGNED BY: BROOKE RIVERA
CHECKED BY: RASHOD GIBSON
REVISED BY: DUC TRAN
DATE REVISED: 8/10/09

LAST REVISION DATE PLOTTED => 03-FEB-2010
TIME PLOTTED => 11:13
08-10-09

BORDER LAST REVISED 8/1/2008
RELATIVE BORDER SCALE IS IN INCHES 0 1 2 3
USERNAME => trmnguye
DGN FILE => c07163ib033.dgn
CU 12235
EA 071631

Dist	COUNTY	ROUTE	POST MILES TOTAL PROJECT	SHEET No.	TOTAL SHEETS
12	Ora	22,405, 605	R0.3/R0.9, 22.3/24.0,3.0/R1.6	380	1929

REGISTERED CIVIL ENGINEER — 8/10/09 DATE

JENNIFER BROOKE RIVERA No. C70332 Exp.09/30/10 CIVIL — REGISTERED PROFESSIONAL ENGINEER — STATE OF CALIFORNIA

2-1-10
PLANS APPROVAL DATE

THE STATE OF CALIFORNIA OR ITS OFFICERS OR AGENTS SHALL NOT BE RESPONSIBLE FOR THE ACCURACY OR COMPLETENESS OF ELECTRONIC COPIES OF THIS PLAN SHEET.

AECOM
999 TOWN & COUNTRY RD
ORANGE, CA 92868

ORANGE COUNTY TRANSPORTATION AUTHORITY
550 S. MAIN STREET
ORANGE, CA 92863-1584

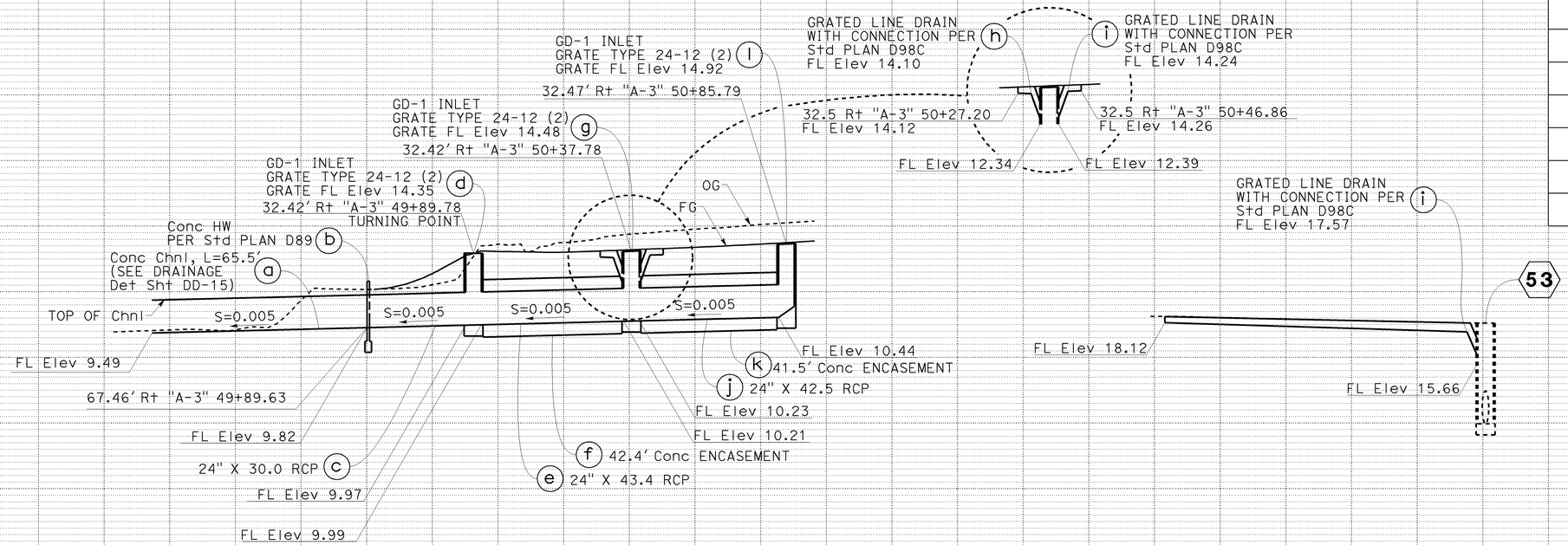

DRAINAGE SYSTEM No. 52A

DRAINAGE SYSTEM No. 53T

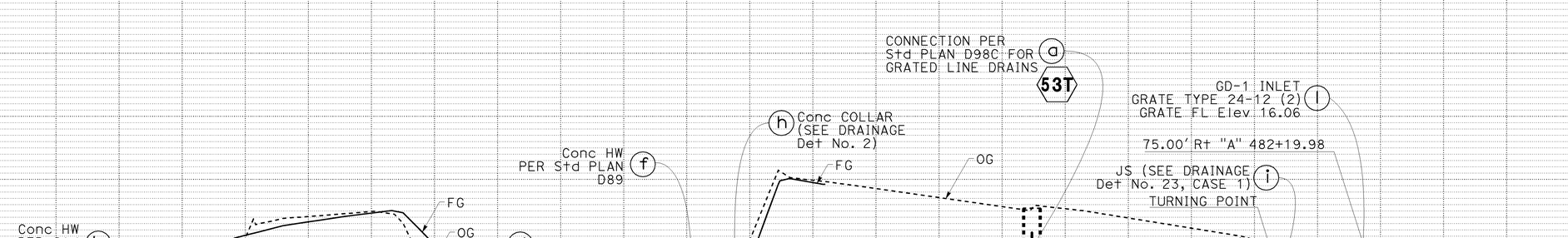

DRAINAGE SYSTEM No. 53

DRAINAGE PROFILE

SCALE: Horiz 1" = 20'
Vert 1"= 4'

DP-34

REVISED BY: RASHOD GIBSON — DATE REVISED: 8/10/09
CALCULATED-DESIGNED BY: BROOKE RIVERA
CHECKED BY:
CONSULTANT FUNCTIONAL SUPERVISOR: ANDRZEJ NOWAK
STATE OF CALIFORNIA - DEPARTMENT OF TRANSPORTATION
Caltrans

LAST REVISION — DATE PLOTTED => 03-FEB-2010
08-10-09 — TIME PLOTTED => 11:13

BORDER LAST REVISED 8/1/2008 | RELATIVE BORDER SCALE IS IN INCHES 0 1 2 3 | USERNAME => trmnguye | DGN FILE => c07163ib034.dgn | CU 12235 | EA 071631

Dist	COUNTY	ROUTE	POST MILES TOTAL PROJECT	SHEET No.	TOTAL SHEETS
12	Ora	22,405, 605	R0.3/R0.9, 22.3/24.0,3.0/R1.6	381	1929

REGISTERED CIVIL ENGINEER — 8/10/09 DATE

JENNIFER BROOKE RIVERA No. C70332 Exp.09/30/10 CIVIL — REGISTERED PROFESSIONAL ENGINEER — STATE OF CALIFORNIA

2-1-10
PLANS APPROVAL DATE

THE STATE OF CALIFORNIA OR ITS OFFICERS OR AGENTS SHALL NOT BE RESPONSIBLE FOR THE ACCURACY OR COMPLETENESS OF ELECTRONIC COPIES OF THIS PLAN SHEET.

AECOM
999 TOWN & COUNTRY RD
ORANGE, CA 92868

ORANGE COUNTY TRANSPORTATION AUTHORITY
550 S. MAIN STREET
ORANGE, CA 92863-1584

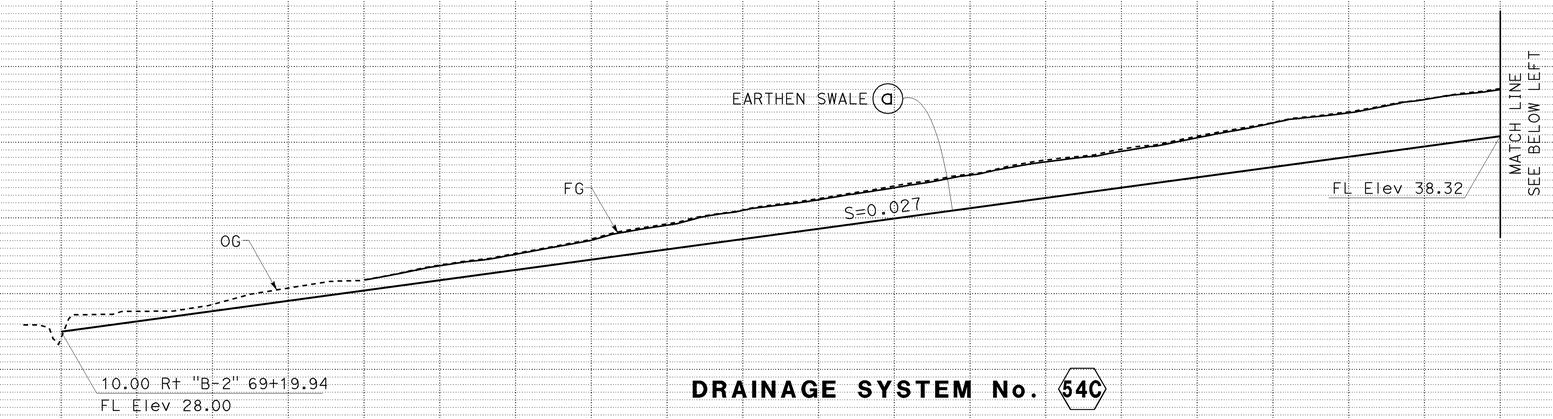

DRAINAGE SYSTEM No. 54C

HMAOD TABLE

SYSTEM No.	INLET Elev	OUTLET Elev
53D	18.80	13.80

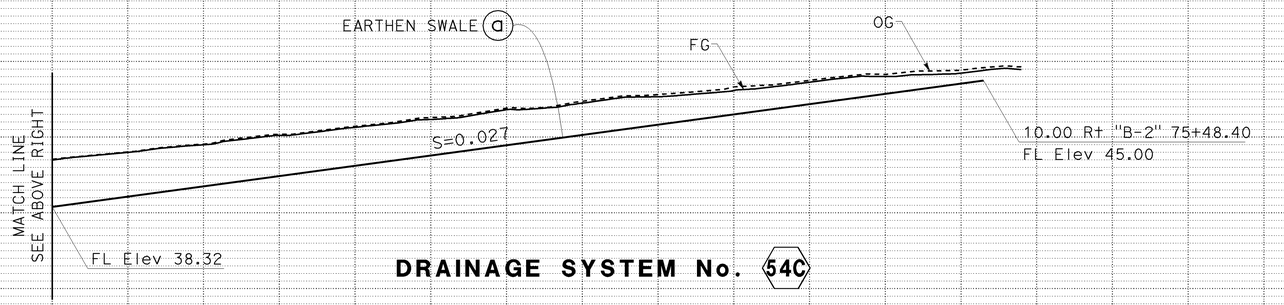

DRAINAGE SYSTEM No. 54C

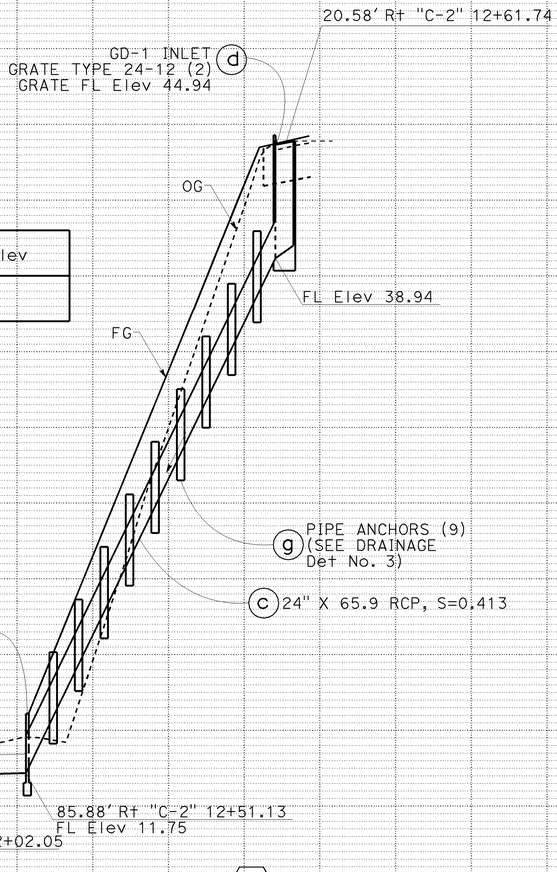

DRAINAGE SYSTEM No. 54

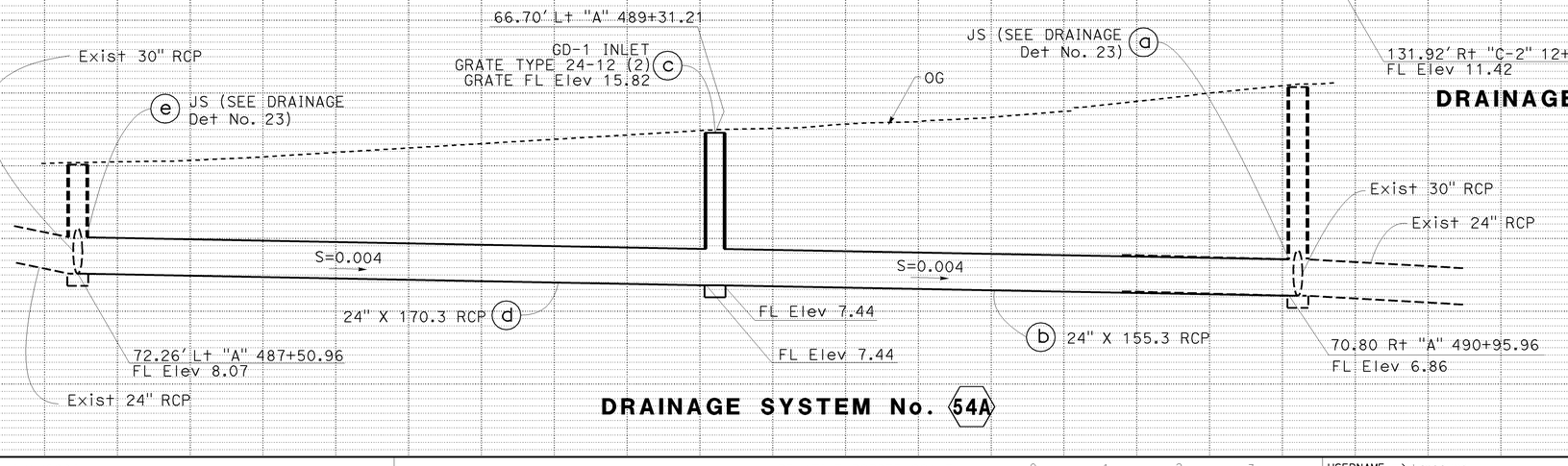

DRAINAGE SYSTEM No. 54A

DRAINAGE PROFILE

SCALE: Horiz 1" = 20'
Vert 1" = 4'

DP-35

DUC TRAN — REVISED BY — 8/10/09 — DATE REVISED
RASHOD GIBSON — BROOKE RIVERA — CALCULATED-DESIGNED BY — CHECKED BY
ANDRZEJ NOWAK — CONSULTANT FUNCTIONAL SUPERVISOR
STATE OF CALIFORNIA - DEPARTMENT OF TRANSPORTATION — Caltrans

LAST REVISION — DATE PLOTTED => 03-FEB-2010 — 08-10-09 — TIME PLOTTED => 11:13

BORDER LAST REVISED 8/1/2008 — RELATIVE BORDER SCALE IS IN INCHES (0 1 2 3) — USERNAME => trmnguye — DGN FILE => c07163ib035.dgn — SCALE: 1 — DU 12235 — EA 071631

Dist	COUNTY	ROUTE	POST MILES TOTAL PROJECT	SHEET No.	TOTAL SHEETS
12	Ora	22,405, 605	R0.3/R0.9, 22.3/24.0,3.0/R1.6	382	1929

REGISTERED CIVIL ENGINEER — 8/10/09 DATE

JENNIFER BROOKE RIVERA No. C70332 Exp.09/30/10 CIVIL — REGISTERED PROFESSIONAL ENGINEER — STATE OF CALIFORNIA

2-1-10
PLANS APPROVAL DATE

THE STATE OF CALIFORNIA OR ITS OFFICERS OR AGENTS SHALL NOT BE RESPONSIBLE FOR THE ACCURACY OR COMPLETENESS OF ELECTRONIC COPIES OF THIS PLAN SHEET.

AECOM
999 TOWN & COUNTRY RD
ORANGE, CA 92868

ORANGE COUNTY
TRANSPORTATION AUTHORITY
550 S. MAIN STREET
ORANGE, CA 92863-1584

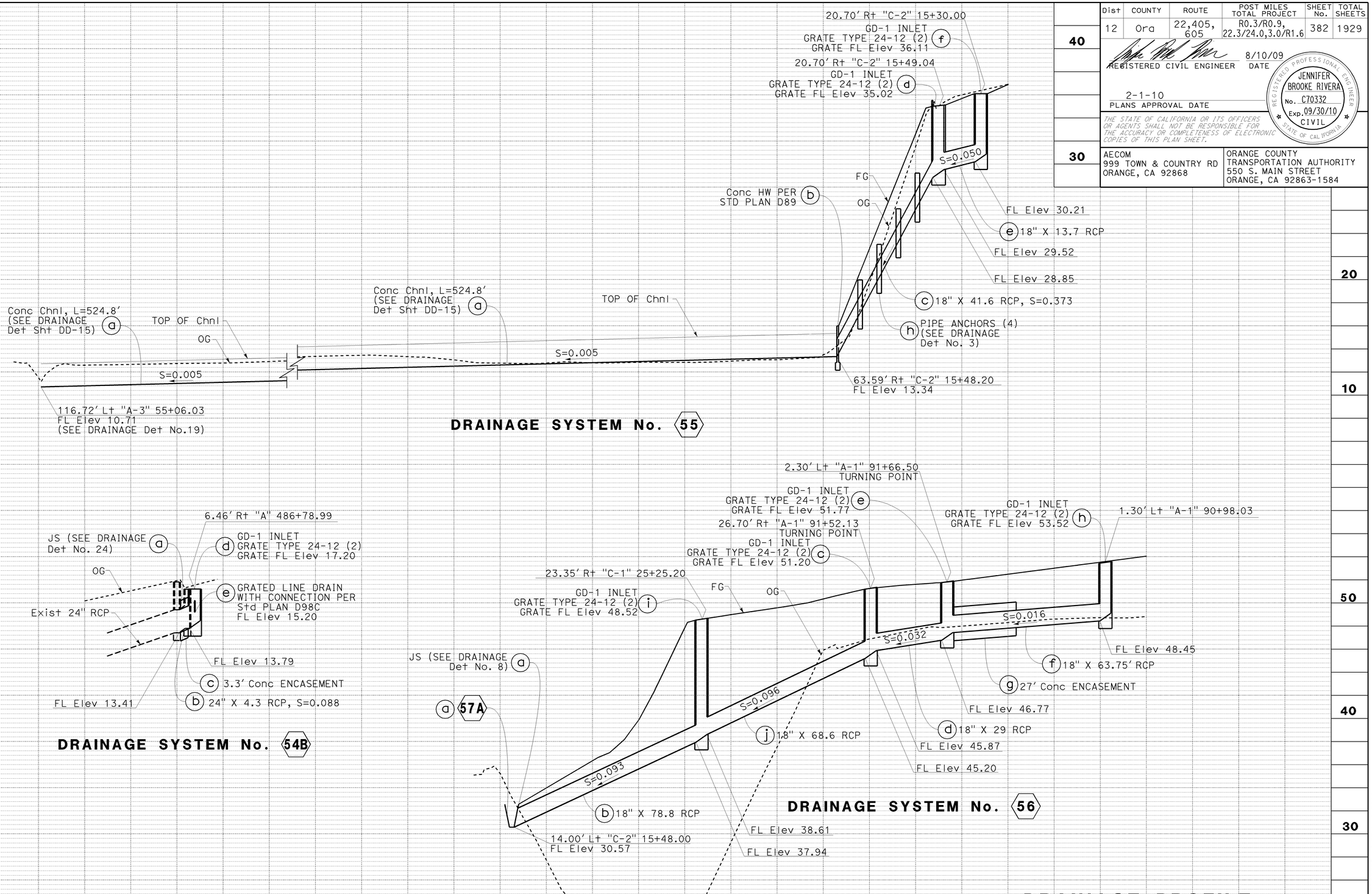

DRAINAGE PROFILE

SCALE: Horiz 1" = 20'
Vert 1" = 4'

DP-36

DUC TRAN — 8/10/09 — REVISED BY — DATE REVISED

RASHOD GIBSON — BROOKE RIVERA — CALCULATED-DESIGNED BY — CHECKED BY

CONSULTANT FUNCTIONAL SUPERVISOR — ANDRZEJ NOWAK

STATE OF CALIFORNIA - DEPARTMENT OF TRANSPORTATION — Caltrans

LAST REVISION DATE PLOTTED => 03-FEB-2010
TIME PLOTTED => 11:13
08-10-09

BORDER LAST REVISED 8/1/2008 — RELATIVE BORDER SCALE IS IN INCHES 0 1 2 3 — USERNAME => trmnguye — DGN FILE => c07163ib036.dgn — CU 12235 — EA 071631

Dist	COUNTY	ROUTE	POST MILES TOTAL PROJECT	SHEET No.	TOTAL SHEETS
12	Ora	22,405, 605	R0.3/R0.9, 22.3/24.0,3.0/R1.6	383	1929

REGISTERED CIVIL ENGINEER 8/10/09 DATE

2-1-10
PLANS APPROVAL DATE

REGISTERED PROFESSIONAL ENGINEER JENNIFER BROOKE RIVERA No. C70332 Exp. 09/30/10 CIVIL STATE OF CALIFORNIA

THE STATE OF CALIFORNIA OR ITS OFFICERS OR AGENTS SHALL NOT BE RESPONSIBLE FOR THE ACCURACY OR COMPLETENESS OF ELECTRONIC COPIES OF THIS PLAN SHEET.

AECOM
999 TOWN & COUNTRY RD
ORANGE, CA 92868

ORANGE COUNTY
TRANSPORTATION AUTHORITY
550 S. MAIN STREET
ORANGE, CA 92863-1584

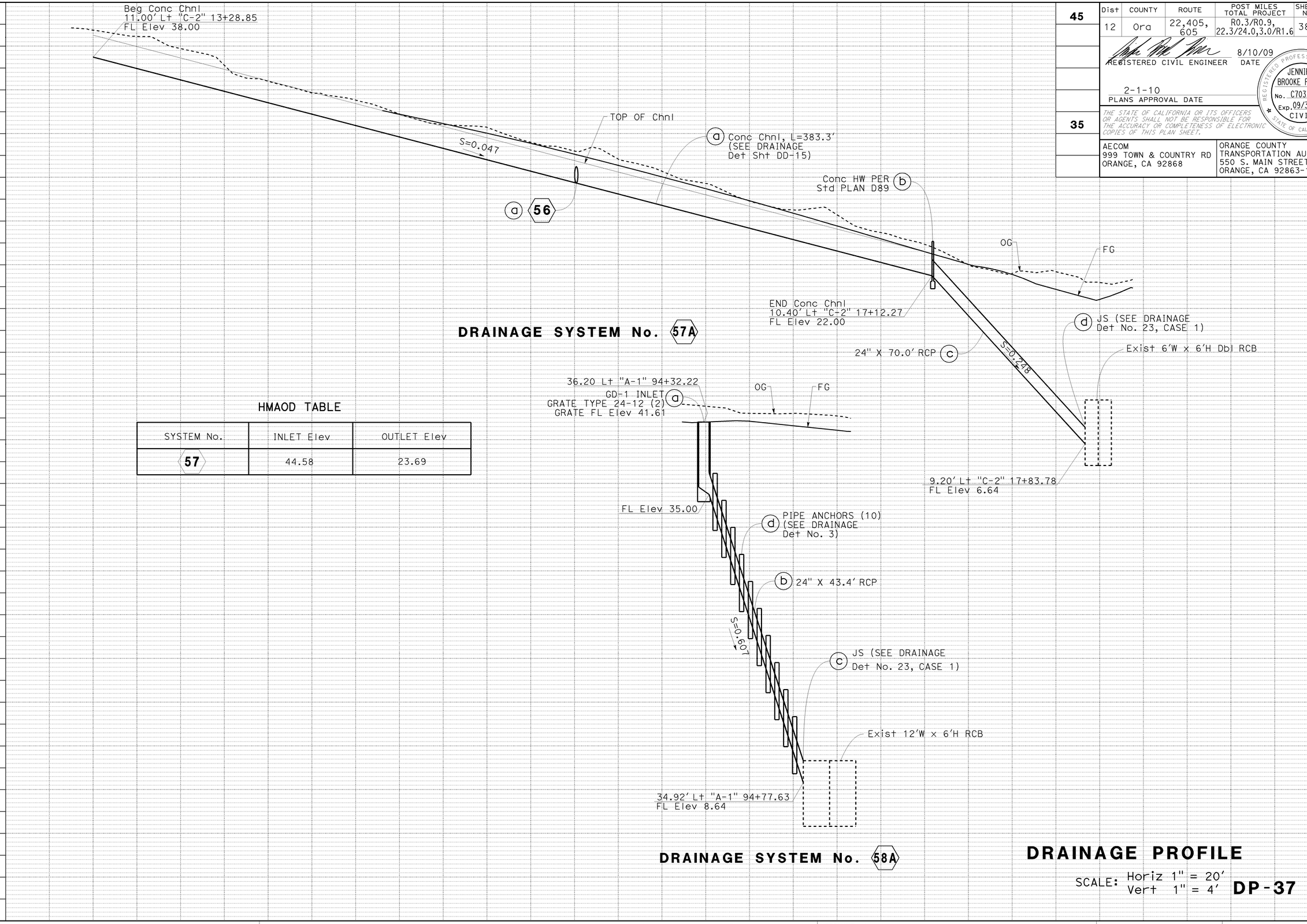

HMAOD TABLE

SYSTEM No.	INLET Elev	OUTLET Elev
57	44.58	23.69

DRAINAGE PROFILE

SCALE: Horiz 1" = 20'
Vert 1" = 4'

DP-37

STATE OF CALIFORNIA - DEPARTMENT OF TRANSPORTATION
Caltrans

CONSULTANT FUNCTIONAL SUPERVISOR: ANDRZEJ NOWAK
CALCULATED-DESIGNED BY: RASHOD GIBSON
CHECKED BY: BROOKE RIVERA
REVISED BY: DUC TRAN
DATE REVISED: 8/10/09

LAST REVISION 08-10-09
DATE PLOTTED => 03-FEB-2010
TIME PLOTTED => 11:13

Dist	COUNTY	ROUTE	POST MILES TOTAL PROJECT	SHEET No.	TOTAL SHEETS
12	Ora	22,405, 605	R0.3/R0.9, 22.3/24.0,3.0/R1.6	384	1929

REGISTERED CIVIL ENGINEER — 8/10/09 DATE

JENNIFER BROOKE RIVERA No. C70332 Exp.09/30/10 CIVIL — REGISTERED PROFESSIONAL ENGINEER — STATE OF CALIFORNIA

2-1-10
PLANS APPROVAL DATE

THE STATE OF CALIFORNIA OR ITS OFFICERS OR AGENTS SHALL NOT BE RESPONSIBLE FOR THE ACCURACY OR COMPLETENESS OF ELECTRONIC COPIES OF THIS PLAN SHEET.

AECOM
999 TOWN & COUNTRY RD
ORANGE, CA 92868

ORANGE COUNTY TRANSPORTATION AUTHORITY
550 S. MAIN STREET
ORANGE, CA 92863-1584

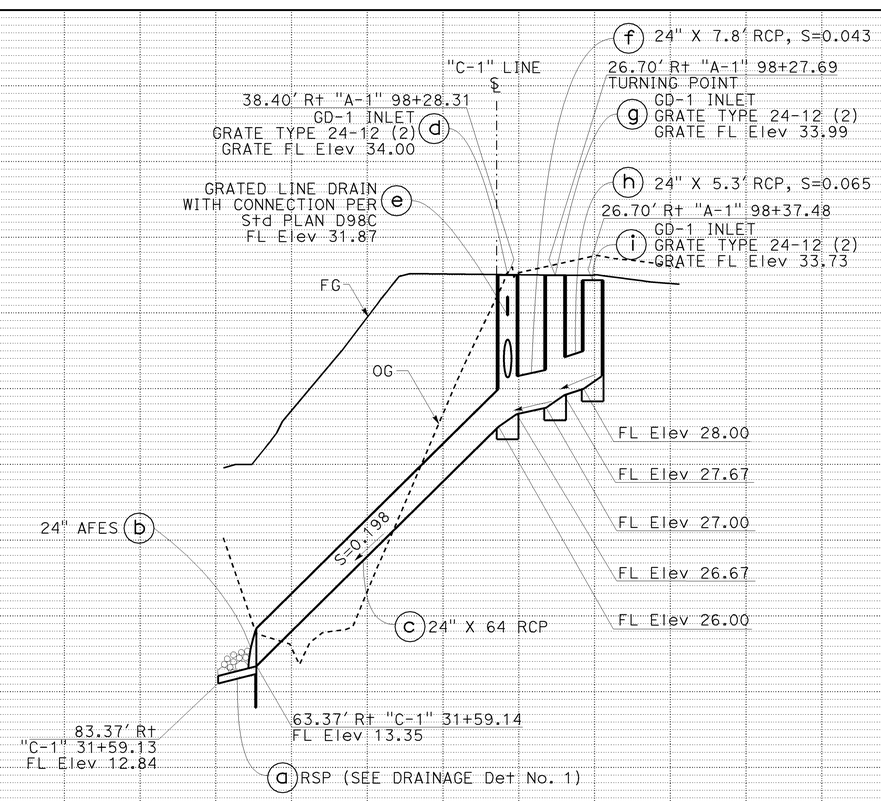

DRAINAGE SYSTEM No. 59

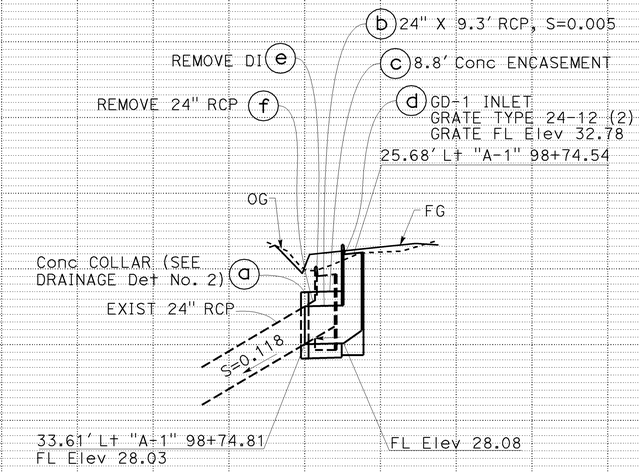

DRAINAGE SYSTEM No. 60

HMAOD TABLE

SYSTEM No.	INLET Elev	OUTLET Elev
60A	34.43	16.00

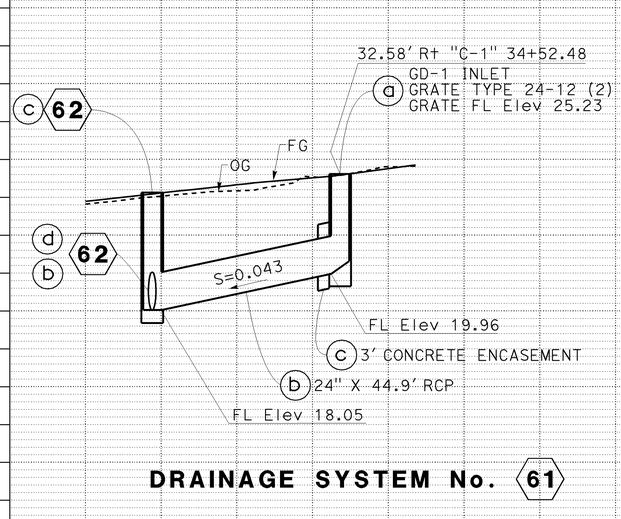

DRAINAGE SYSTEM No. 61

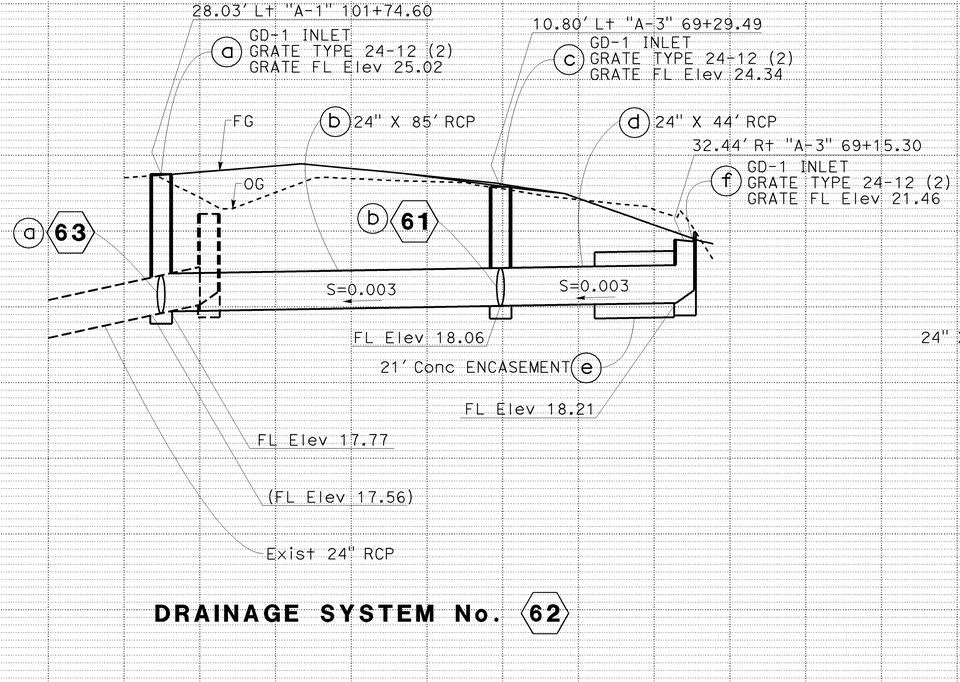

DRAINAGE SYSTEM No. 62

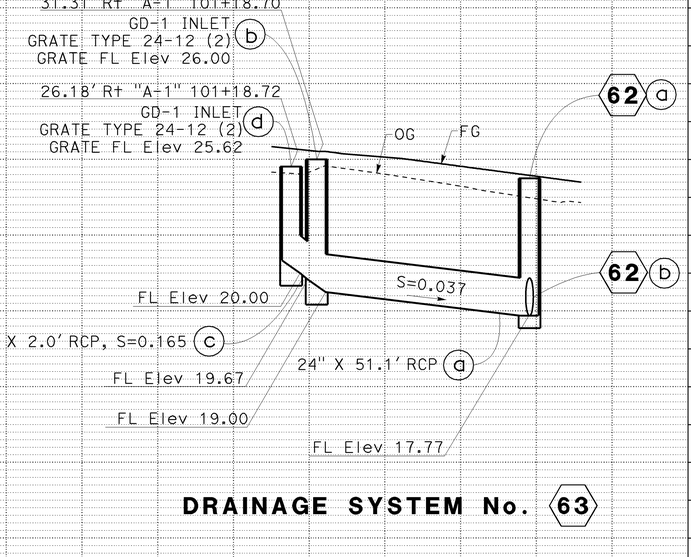

DRAINAGE SYSTEM No. 63

DRAINAGE PROFILE

SCALE: Horiz 1" = 20'
Vert 1" = 4'

DP-38

REVISED BY	DATE REVISED
DUC TRAN	8/10/09

RASHOD GIBSON — BROOKE RIVERA — CALCULATED-DESIGNED BY — CHECKED BY

ANDRZEJ NOWAK — CONSULTANT FUNCTIONAL SUPERVISOR

STATE OF CALIFORNIA - DEPARTMENT OF TRANSPORTATION — Caltrans

LAST REVISION DATE PLOTTED => 03-FEB-2010
TIME PLOTTED => 11:13
08-10-09

BORDER LAST REVISED 8/1/2008 — RELATIVE BORDER SCALE IS IN INCHES 0 1 2 3

USERNAME => trmnguye
DGN FILE => c071631b038.dgn

CU 12235 — EA 071631

Dist	COUNTY	ROUTE	POST MILES TOTAL PROJECT	SHEET No.	TOTAL SHEETS
12	Ora	22,405, 605	R0.3/R0.9, 22.3/24.0,3.0/R1.6	385	1929

REGISTERED CIVIL ENGINEER — 8/10/09 DATE

JENNIFER BROOKE RIVERA No. C70332 Exp.09/30/10 CIVIL — REGISTERED PROFESSIONAL ENGINEER — STATE OF CALIFORNIA

2-1-10
PLANS APPROVAL DATE

THE STATE OF CALIFORNIA OR ITS OFFICERS OR AGENTS SHALL NOT BE RESPONSIBLE FOR THE ACCURACY OR COMPLETENESS OF ELECTRONIC COPIES OF THIS PLAN SHEET.

AECOM
999 TOWN & COUNTRY RD
ORANGE, CA 92868

ORANGE COUNTY TRANSPORTATION AUTHORITY
550 S. MAIN STREET
ORANGE, CA 92863-1584

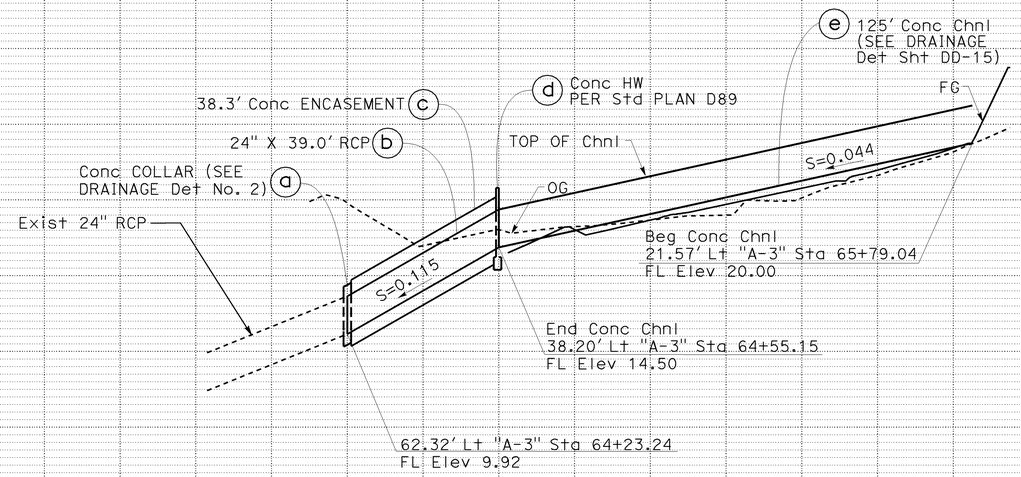

DRAINAGE SYSTEM No. 59A

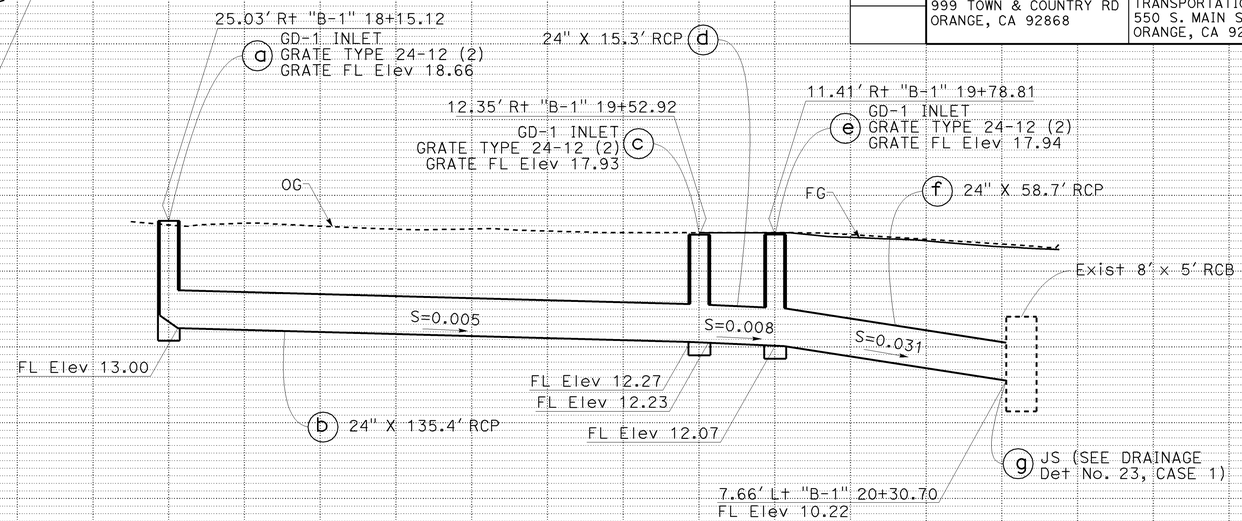

DRAINAGE SYSTEM No. 64

HMAOD TABLE

SYSTEM No.	INLET Elev	OUTLET Elev
65A	15.70	13.79

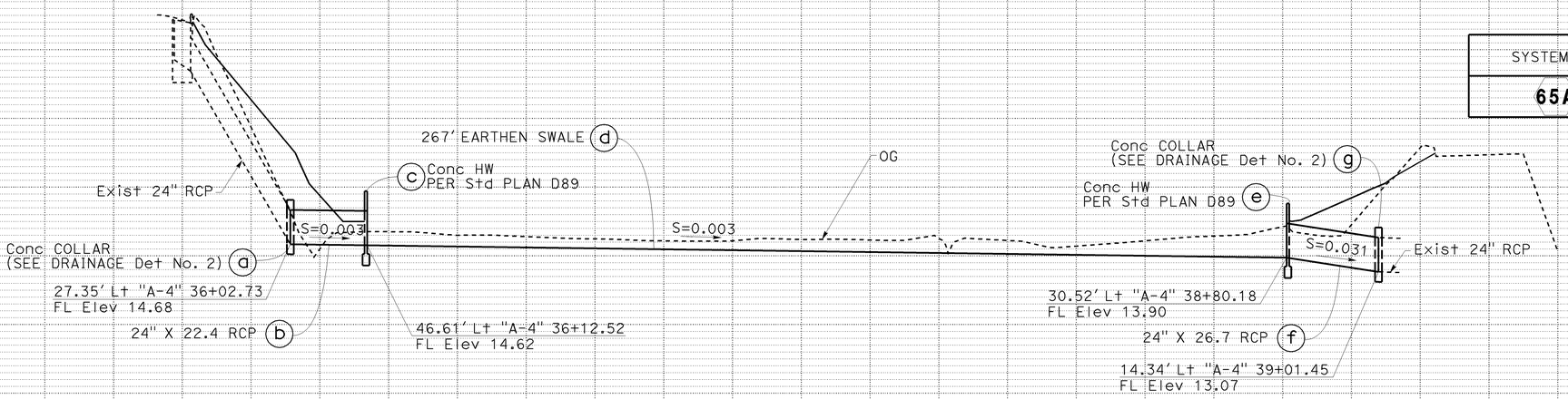

DRAINAGE SYSTEM No. 65

DRAINAGE PROFILE

SCALE: Horiz 1" = 20'
Vert 1" = 4'

DP-39

STATE OF CALIFORNIA - DEPARTMENT OF TRANSPORTATION
Caltrans
CONSULTANT FUNCTIONAL SUPERVISOR: ANDRZEJ NOWAK
CALCULATED-DESIGNED BY: RASHOD GIBSON
CHECKED BY: BROOKE RIVERA
REVISED BY: DUC TRAN
DATE REVISED: 8/10/09

LAST REVISION DATE PLOTTED => 03-FEB-2010
TIME PLOTTED => 11:14
08-10-09

BORDER LAST REVISED 8/1/2008
RELATIVE BORDER SCALE IS IN INCHES 0 1 2 3
USERNAME => trmnguye
DGN FILE => c07163ib039.dgn
CU 12235
EA 071631

Dist	COUNTY	ROUTE	POST MILES TOTAL PROJECT	SHEET No.	TOTAL SHEETS
12	Ora	22,405, 605	R0.3/R0.9, 22.3/24.0,3.0/R1.6	386	1929

REGISTERED CIVIL ENGINEER 8/10/09 DATE

2-1-10
PLANS APPROVAL DATE

REGISTERED PROFESSIONAL ENGINEER JENNIFER BROOKE RIVERA No. C70332 Exp. 09/30/10 CIVIL STATE OF CALIFORNIA

THE STATE OF CALIFORNIA OR ITS OFFICERS OR AGENTS SHALL NOT BE RESPONSIBLE FOR THE ACCURACY OR COMPLETENESS OF ELECTRONIC COPIES OF THIS PLAN SHEET.

AECOM
999 TOWN & COUNTRY RD
ORANGE, CA 92868

ORANGE COUNTY
TRANSPORTATION AUTHORITY
550 S. MAIN STREET
ORANGE, CA 92863-1584

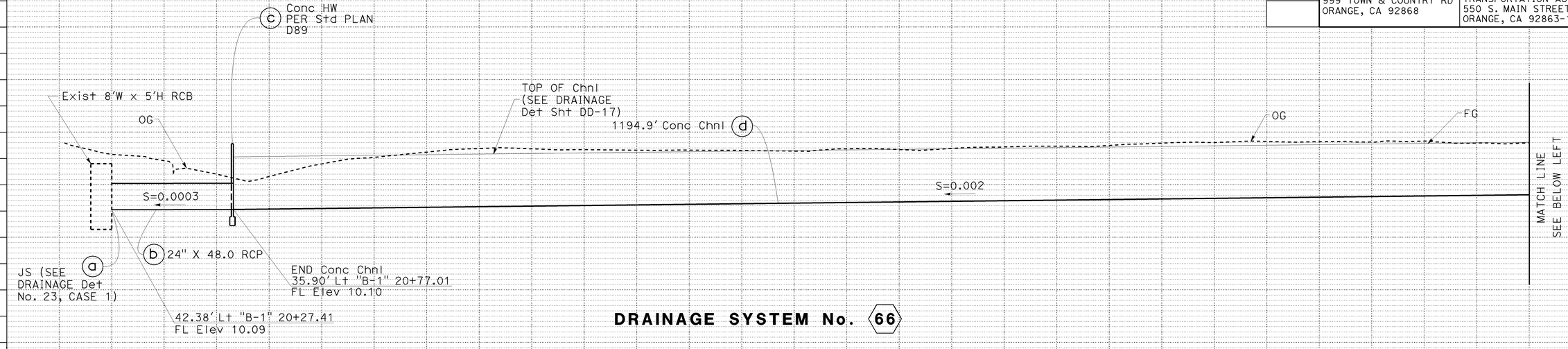

DRAINAGE SYSTEM No. 66

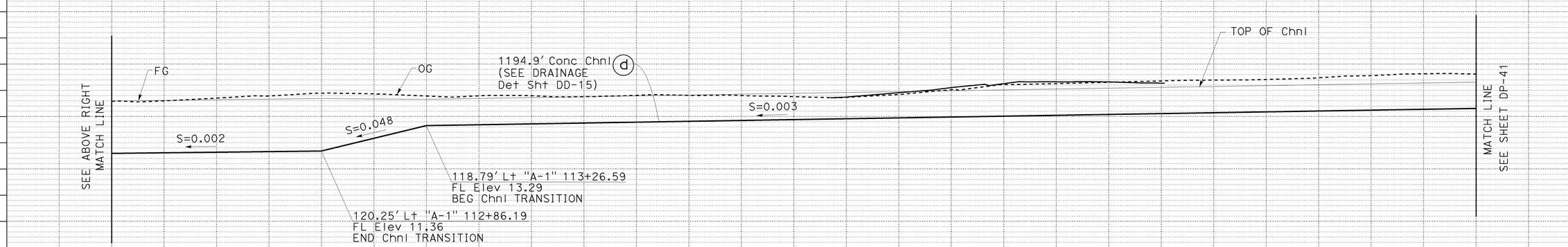

DRAINAGE SYSTEM No. 66

DRAINAGE PROFILE

SCALE: Horiz 1" = 20'
Vert 1" = 4'

DP-40

STATE OF CALIFORNIA - DEPARTMENT OF TRANSPORTATION
Caltrans

CONSULTANT FUNCTIONAL SUPERVISOR: ANDRZEJ NOWAK
CALCULATED-DESIGNED BY: RASHOD GIBSON
CHECKED BY: BROOKE RIVERA
REVISED BY: DUC TRAN
DATE REVISED: 8/10/09

LAST REVISION 08-10-09
DATE PLOTTED => 03-FEB-2010
TIME PLOTTED => 11:14

Dist	COUNTY	ROUTE	POST MILES TOTAL PROJECT	SHEET No.	TOTAL SHEETS
12	Ora	22,405, 605	R0.3/R0.9, 22.3/24.0,3.0/R1.6	387	1929

REGISTERED CIVIL ENGINEER — 8/10/09 DATE

REGISTERED PROFESSIONAL ENGINEER — JENNIFER BROOKE RIVERA — No. C70332 — Exp. 09/30/10 CIVIL — STATE OF CALIFORNIA

2-1-10
PLANS APPROVAL DATE

THE STATE OF CALIFORNIA OR ITS OFFICERS OR AGENTS SHALL NOT BE RESPONSIBLE FOR THE ACCURACY OR COMPLETENESS OF ELECTRONIC COPIES OF THIS PLAN SHEET.

AECOM
999 TOWN & COUNTRY RD
ORANGE, CA 92868

ORANGE COUNTY
TRANSPORTATION AUTHORITY
550 S. MAIN STREET
ORANGE, CA 92863-1584

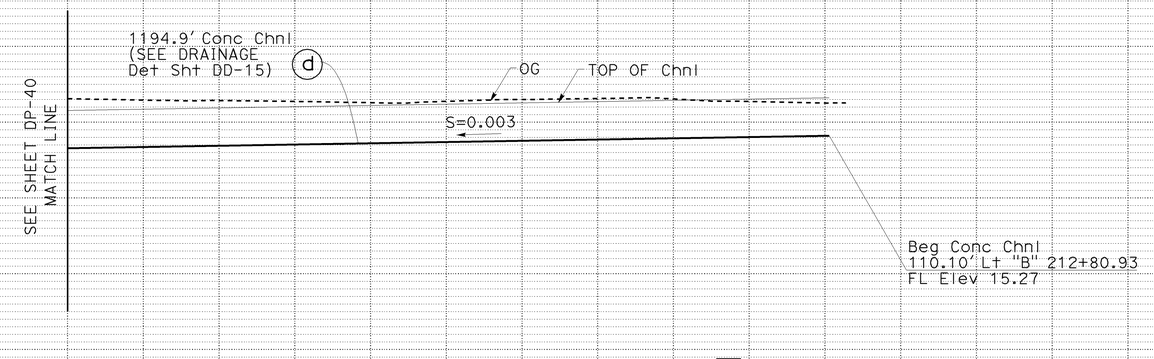

DRAINAGE SYSTEM No. 66

DRAINAGE PROFILE

SCALE: Horiz 1" = 20'
Vert 1" = 4'

DP-41

REVISED BY	DATE REVISED
DUC TRAN	8/10/09

CALCULATED-DESIGNED BY: RASHOD GIBSON
CHECKED BY: BROOKE RIVERA

CONSULTANT FUNCTIONAL SUPERVISOR: ANDRZEJ NOWAK

STATE OF CALIFORNIA - DEPARTMENT OF TRANSPORTATION
Caltrans

LAST REVISION: DATE PLOTTED => 03-FEB-2010
08-10-09 TIME PLOTTED => 11:14

BORDER LAST REVISED 8/1/2008

RELATIVE BORDER SCALE IS IN INCHES 0 1 2 3

USERNAME => trmnguye
DGN FILE => c07163ib041.dgn

CU 12235

EA 071631

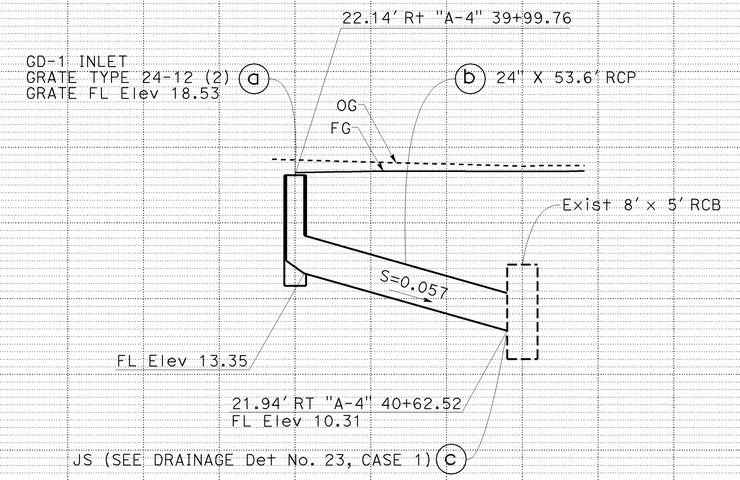

DRAINAGE SYSTEM No. 66B

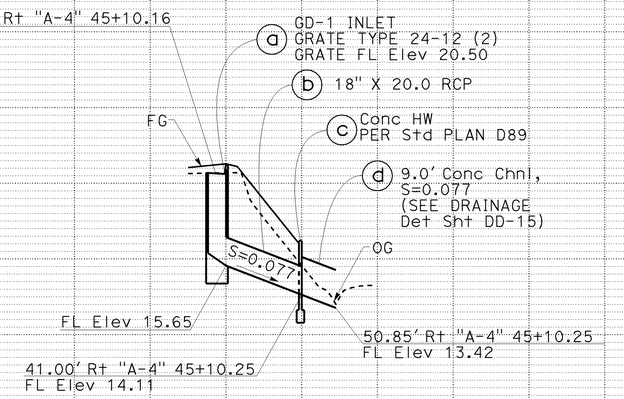

DRAINAGE SYSTEM No. 66C

Dist	COUNTY	ROUTE	POST MILES TOTAL PROJECT	SHEET No.	TOTAL SHEETS
12	Ora	22,405, 605	R0.3/R0.9, 22.3/24.0,3.0/R1.6	388	1929

REGISTERED CIVIL ENGINEER — 8/10/09 DATE

JENNIFER BROOKE RIVERA No. C70332 Exp. 09/30/10 CIVIL — REGISTERED PROFESSIONAL ENGINEER — STATE OF CALIFORNIA

2-1-10
PLANS APPROVAL DATE

THE STATE OF CALIFORNIA OR ITS OFFICERS OR AGENTS SHALL NOT BE RESPONSIBLE FOR THE ACCURACY OR COMPLETENESS OF ELECTRONIC COPIES OF THIS PLAN SHEET.

AECOM
999 TOWN & COUNTRY RD
ORANGE, CA 92868

ORANGE COUNTY
TRANSPORTATION AUTHORITY
550 S. MAIN STREET
ORANGE, CA 92863-1584

DRAINAGE PROFILE

SCALE: Horiz 1" = 20'
Vert 1" = 4'

DP-42

REVISED BY: DUC TRAN — DATE REVISED: 8/10/09
CALCULATED-DESIGNED BY: RASHOD GIBSON
CHECKED BY: BROOKE RIVERA
CONSULTANT FUNCTIONAL SUPERVISOR: ANDRZEJ NOWAK
STATE OF CALIFORNIA - DEPARTMENT OF TRANSPORTATION — Caltrans

LAST REVISION: DATE PLOTTED => 03-FEB-2010 08-10-09 TIME PLOTTED => 11:14

BORDER LAST REVISED 8/1/2008 — RELATIVE BORDER SCALE IS IN INCHES 0 1 2 3 — USERNAME => trmnguye — DGN FILE => c07163ib042.dgn — CU 12235 — EA 071631

Dist	COUNTY	ROUTE	POST MILES TOTAL PROJECT	SHEET No.	TOTAL SHEETS
12	Ora	22,405, 605	R0.3/R0.9, 22.3/24.0,3.0/R1.6	389	1929

REGISTERED CIVIL ENGINEER — 8/10/09 DATE

JENNIFER BROOKE RIVERA No. C70332 Exp. 09/30/10 CIVIL — REGISTERED PROFESSIONAL ENGINEER — STATE OF CALIFORNIA

2-1-10
PLANS APPROVAL DATE

THE STATE OF CALIFORNIA OR ITS OFFICERS OR AGENTS SHALL NOT BE RESPONSIBLE FOR THE ACCURACY OR COMPLETENESS OF ELECTRONIC COPIES OF THIS PLAN SHEET.

AECOM
999 TOWN & COUNTRY RD
ORANGE, CA 92868

ORANGE COUNTY TRANSPORTATION AUTHORITY
550 S. MAIN STREET
ORANGE, CA 92863-1584

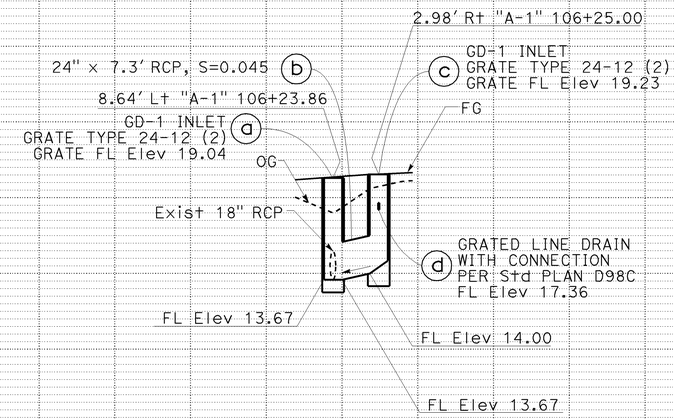

DRAINAGE SYSTEM No. 72

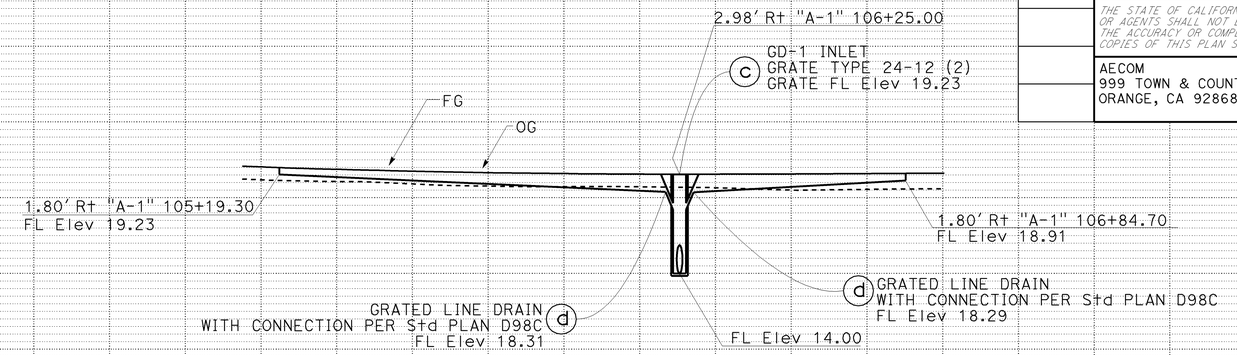

DRAINAGE SYSTEM No. 72T

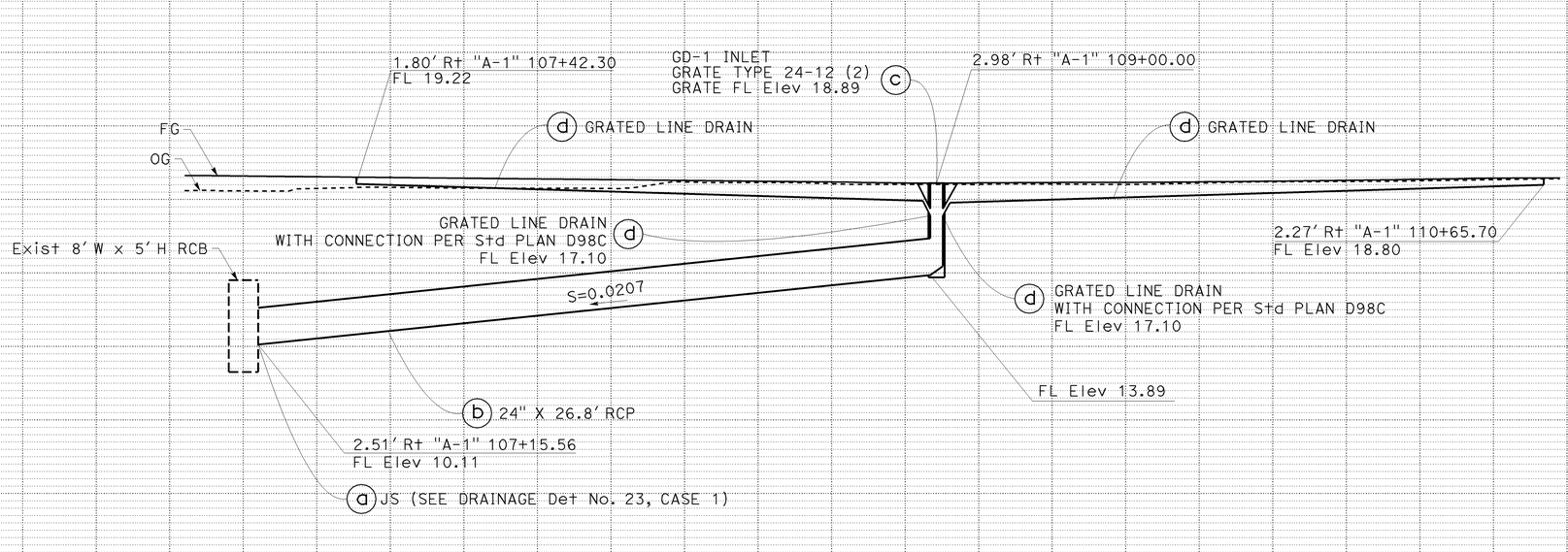

DRAINAGE SYSTEM No. 72A

DRAINAGE PROFILE

SCALE: Horiz 1" = 20'
Vert 1" = 4'

DP-43

REVISED BY: DUC TRAN — DATE REVISED: 8/10/09
CALCULATED-DESIGNED BY: RASHOD GIBSON — CHECKED BY: BROOKE RIVERA
CONSULTANT FUNCTIONAL SUPERVISOR: ANDRZEJ NOWAK
STATE OF CALIFORNIA - DEPARTMENT OF TRANSPORTATION — Caltrans

LAST REVISION: DATE PLOTTED => 03-FEB-2010 — TIME PLOTTED => 11:14
08-10-09

BORDER LAST REVISED 8/1/2008 — RELATIVE BORDER SCALE IS IN INCHES 0 1 2 3

USERNAME => trmnguye
DGN FILE => c07163ib043.dgn

CU 12235 — EA 071631

Dist	COUNTY	ROUTE	POST MILES TOTAL PROJECT	SHEET No.	TOTAL SHEETS
12	Ora	22,405, 605	R0.3/R0.9, 22.3/24.0,3.0/R1.6	390	1929

REGISTERED CIVIL ENGINEER — 8/10/09 DATE

JENNIFER BROOKE RIVERA No. C70332 Exp. 09/30/10 CIVIL — REGISTERED PROFESSIONAL ENGINEER — STATE OF CALIFORNIA

2-1-10
PLANS APPROVAL DATE

THE STATE OF CALIFORNIA OR ITS OFFICERS OR AGENTS SHALL NOT BE RESPONSIBLE FOR THE ACCURACY OR COMPLETENESS OF ELECTRONIC COPIES OF THIS PLAN SHEET.

AECOM
999 TOWN & COUNTRY RD
ORANGE, CA 92868

ORANGE COUNTY
TRANSPORTATION AUTHORITY
550 S. MAIN STREET
ORANGE, CA 92863-1584

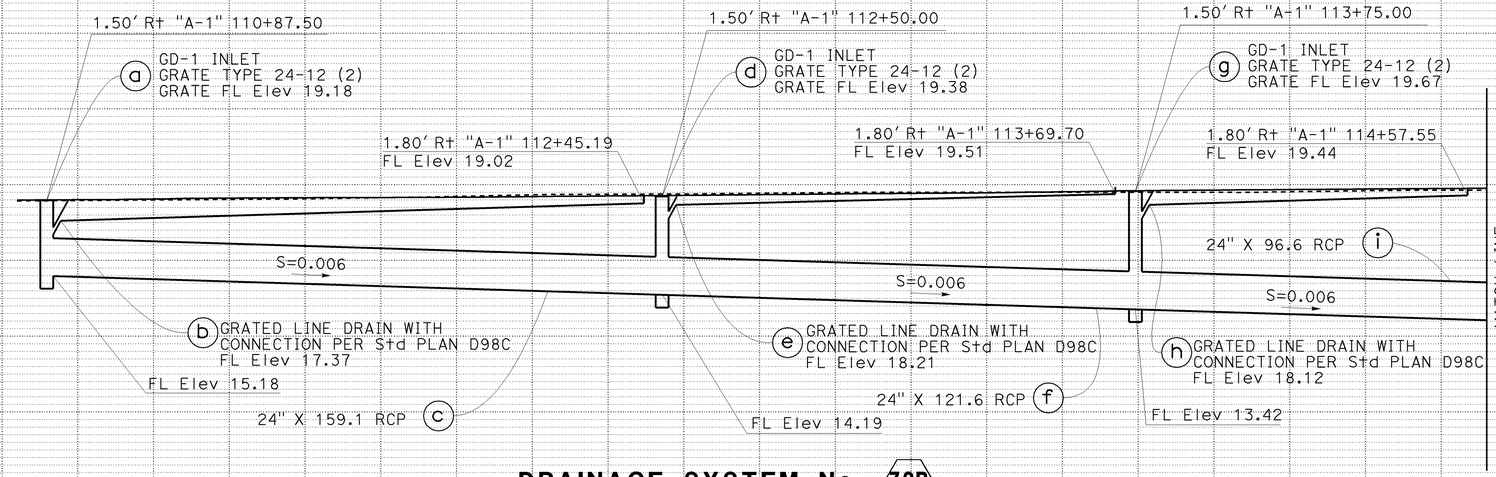

DRAINAGE SYSTEM No. 72B

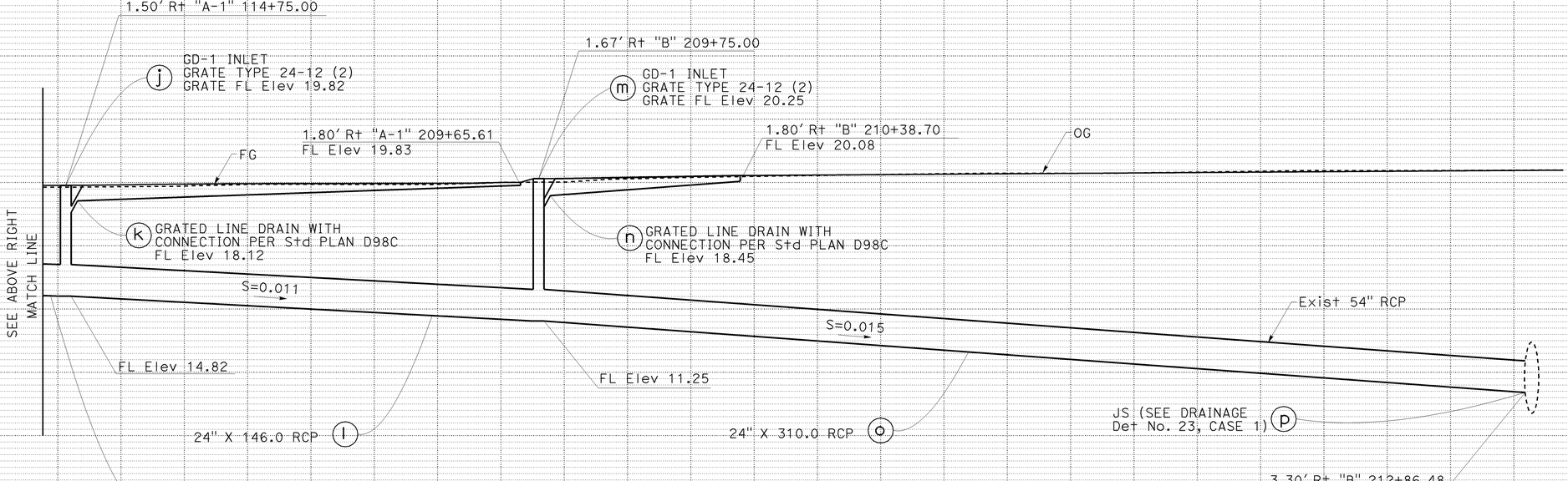

DRAINAGE SYSTEM No. 72B

DRAINAGE PROFILE

SCALE: Horiz 1" = 20'
Vert 1" = 4'

DP-44

DUC TRAN — 8/10/09 — REVISED BY — DATE REVISED
RASHOD GIBSON — BROOKE RIVERA — CALCULATED-DESIGNED BY — CHECKED BY
ANDRZEJ NOWAK — CONSULTANT FUNCTIONAL SUPERVISOR
STATE OF CALIFORNIA - DEPARTMENT OF TRANSPORTATION — Caltrans

LAST REVISION DATE PLOTTED => 03-FEB-2010
08-10-09 TIME PLOTTED => 11:14

Dist	COUNTY	ROUTE	POST MILES TOTAL PROJECT	SHEET No.	TOTAL SHEETS
12	Ora	22,405, 605	R0.3/R0.9, 22.3/24.0,3.0/R1.6	391	1929

REGISTERED CIVIL ENGINEER — 8/10/09 DATE

REGISTERED PROFESSIONAL ENGINEER — JENNIFER BROOKE RIVERA — No. C70332 — Exp.09/30/10 — CIVIL — STATE OF CALIFORNIA

2-1-10
PLANS APPROVAL DATE

THE STATE OF CALIFORNIA OR ITS OFFICERS OR AGENTS SHALL NOT BE RESPONSIBLE FOR THE ACCURACY OR COMPLETENESS OF ELECTRONIC COPIES OF THIS PLAN SHEET.

AECOM
999 TOWN & COUNTRY RD
ORANGE, CA 92868

ORANGE COUNTY
TRANSPORTATION AUTHORITY
550 S. MAIN STREET
ORANGE, CA 92863-1584

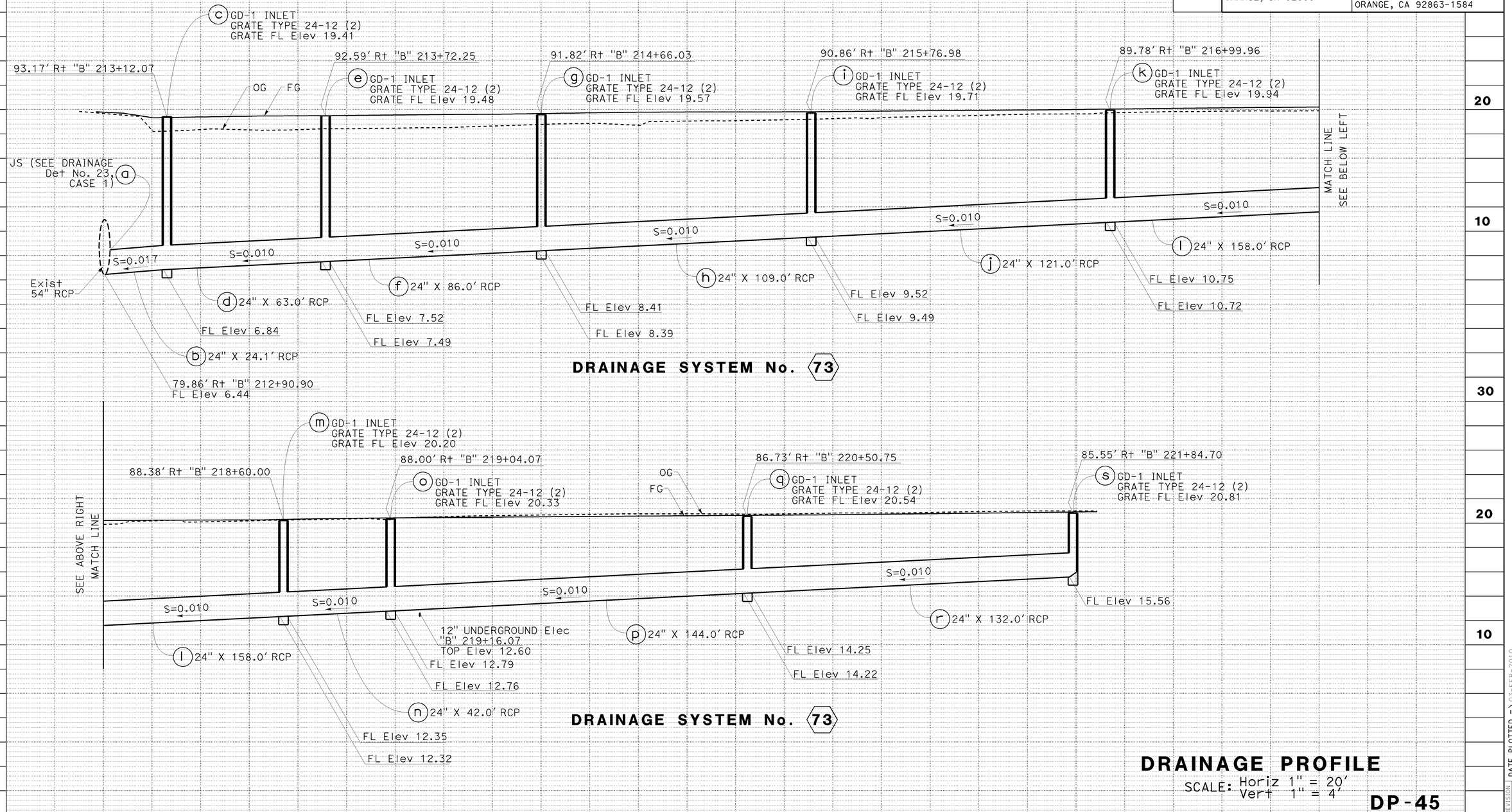

DRAINAGE SYSTEM No. 73

DRAINAGE SYSTEM No. 73

DRAINAGE PROFILE

SCALE: Horiz 1" = 20′
Vert 1" = 4′

DP-45

REVISED BY: RASHOD GIBSON, BROOKE RIVERA — DATE REVISED: 8/10/09 — DUC TRAN
CALCULATED-DESIGNED BY — CHECKED BY
CONSULTANT FUNCTIONAL SUPERVISOR: ANDRZEJ NOWAK
STATE OF CALIFORNIA - DEPARTMENT OF TRANSPORTATION — Caltrans

LAST REVISION — DATE PLOTTED => 03-FEB-2010 — TIME PLOTTED => 11:15
08-10-09

BORDER LAST REVISED 8/1/2008 — RELATIVE BORDER SCALE IS IN INCHES 0 1 2 3

USERNAME => trmnguye
DGN FILE => c07163ib045.dgn

CU 12235 — EA 071631

Dist	COUNTY	ROUTE	POST MILES TOTAL PROJECT	SHEET No.	TOTAL SHEETS
12	Ora	22,405, 605	R0.3/R0.9, 22.3/24.0,3.0/R1.6	392	1929

REGISTERED CIVIL ENGINEER — 8/10/09 DATE

JENNIFER BROOKE RIVERA No. C70332 Exp.09/30/10 CIVIL — REGISTERED PROFESSIONAL ENGINEER — STATE OF CALIFORNIA

2-1-10
PLANS APPROVAL DATE

THE STATE OF CALIFORNIA OR ITS OFFICERS OR AGENTS SHALL NOT BE RESPONSIBLE FOR THE ACCURACY OR COMPLETENESS OF ELECTRONIC COPIES OF THIS PLAN SHEET.

AECOM
999 TOWN & COUNTRY RD
ORANGE, CA 92868

ORANGE COUNTY
TRANSPORTATION AUTHORITY
550 S. MAIN STREET
ORANGE, CA 92863-1584

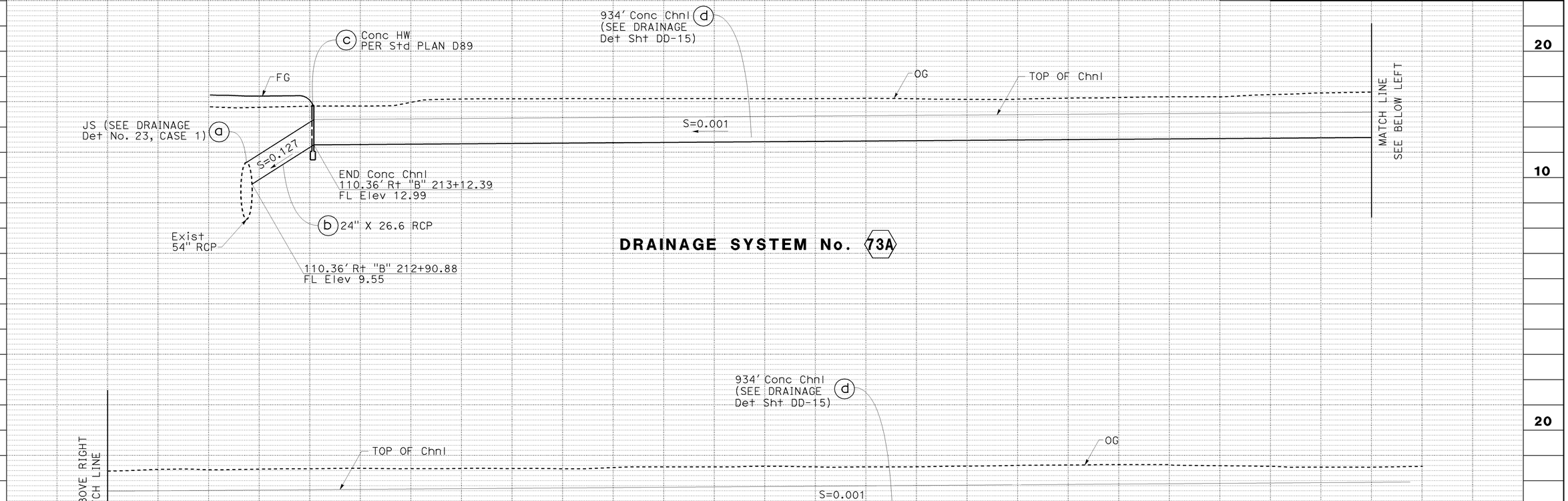

DRAINAGE SYSTEM No. 73A

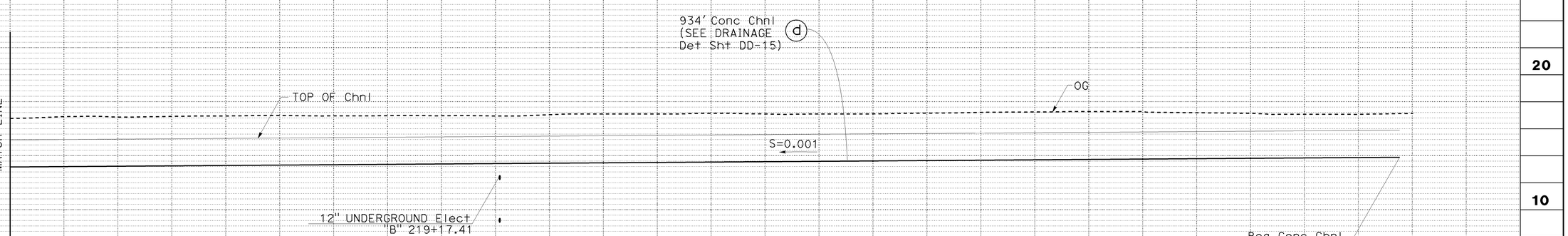

DRAINAGE SYSTEM No. 73A

DRAINAGE PROFILE

SCALE: Horiz 1" = 20'
Vert 1" = 4'

DP-46

REVISED BY: DUC TRAN — DATE REVISED: 8/10/09
CALCULATED-DESIGNED BY: RASHOD GIBSON
CHECKED BY: BROOKE RIVERA
CONSULTANT FUNCTIONAL SUPERVISOR: ANDRZEJ NOWAK
STATE OF CALIFORNIA - DEPARTMENT OF TRANSPORTATION — Caltrans

LAST REVISION: DATE PLOTTED => 03-FEB-2010 08-10-09 TIME PLOTTED => 11:15

BORDER LAST REVISED 8/1/2008 — RELATIVE BORDER SCALE IS IN INCHES 0 1 2 3

USERNAME => trmnguye
DGN FILE => c07163ib046.dgn

CU 12235 — EA 071631

Dist	COUNTY	ROUTE	POST MILES TOTAL PROJECT	SHEET No.	TOTAL SHEETS
12	Ora	22,405, 605	R0.3/R0.9, 22.3/24.0,3.0/R1.6	393	1929

REGISTERED CIVIL ENGINEER — 8/10/09 DATE

2-1-10
PLANS APPROVAL DATE

REGISTERED PROFESSIONAL ENGINEER
JENNIFER BROOKE RIVERA
No. C70332
Exp. 09/30/10
CIVIL
STATE OF CALIFORNIA

THE STATE OF CALIFORNIA OR ITS OFFICERS OR AGENTS SHALL NOT BE RESPONSIBLE FOR THE ACCURACY OR COMPLETENESS OF ELECTRONIC COPIES OF THIS PLAN SHEET.

AECOM
999 TOWN & COUNTRY RD
ORANGE, CA 92868

ORANGE COUNTY
TRANSPORTATION AUTHORITY
550 S. MAIN STREET
ORANGE, CA 92863-1584

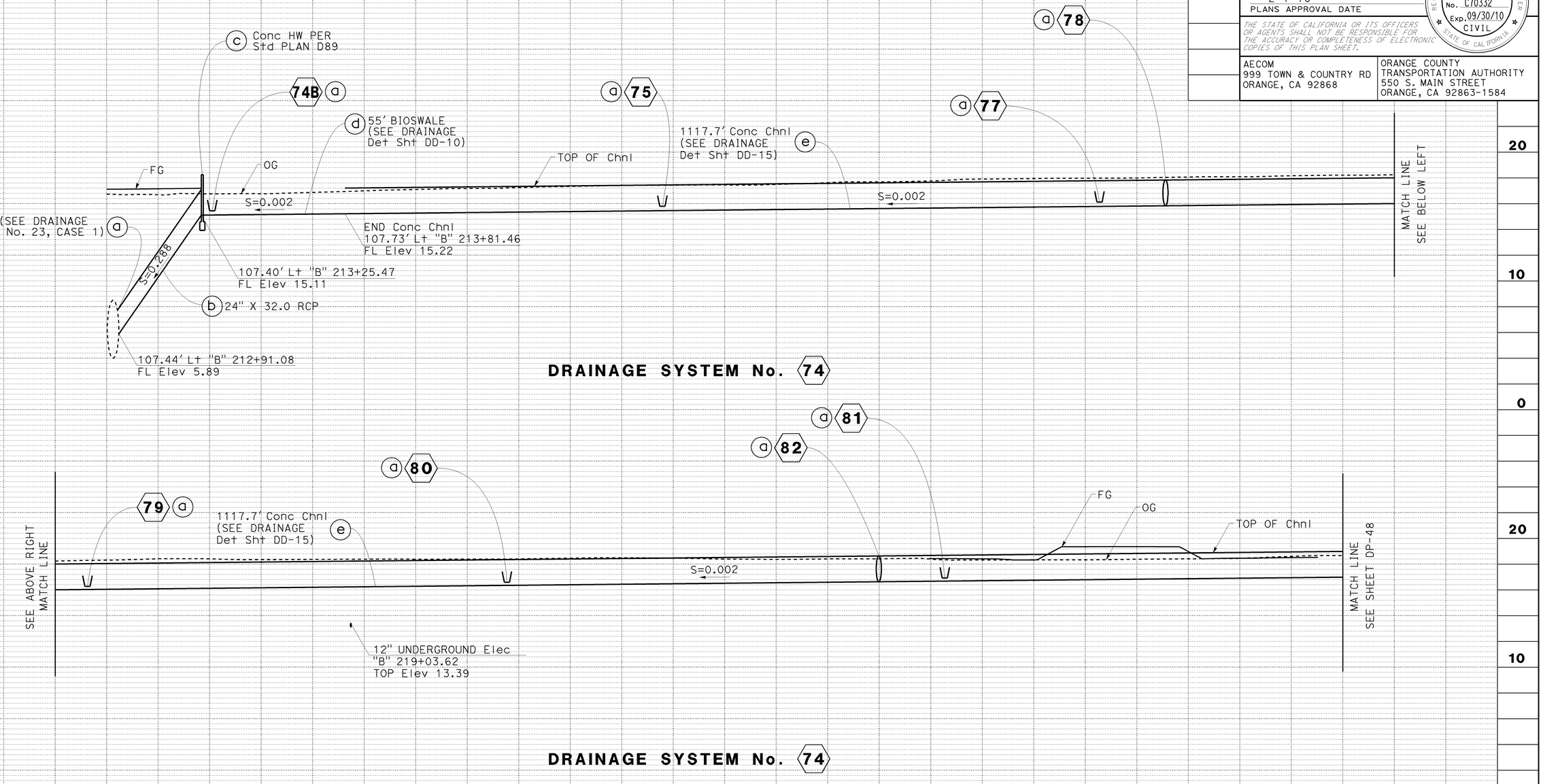

DRAINAGE SYSTEM No. 74

DRAINAGE SYSTEM No. 74

DRAINAGE PROFILE

SCALE: Horiz 1" = 20'
Vert 1" = 4'

DP-47

REVISED BY: DUC TRAN — DATE REVISED: 8/10/09
CALCULATED-DESIGNED BY: RASHOD GIBSON
CHECKED BY: BROOKE RIVERA
CONSULTANT FUNCTIONAL SUPERVISOR: ANDRZEJ NOWAK
STATE OF CALIFORNIA - DEPARTMENT OF TRANSPORTATION — Caltrans

LAST REVISION: DATE PLOTTED => 03-FEB-2010 TIME PLOTTED => 11:15
08-10-09

BORDER LAST REVISED 8/1/2008
RELATIVE BORDER SCALE IS IN INCHES 0 1 2 3
USERNAME => trmnguye
DGN FILE => c07163ib047.dgn
CU 12235
EA 071631

Dist	COUNTY	ROUTE	POST MILES TOTAL PROJECT	SHEET No.	TOTAL SHEETS
12	Ora	22,405, 605	R0.3/R0.9, 22.3/24.0,3.0/R1.6	394	1929

REGISTERED CIVIL ENGINEER — 8/10/09 DATE

JENNIFER BROOKE RIVERA No. C70332 Exp.09/30/10 CIVIL — REGISTERED PROFESSIONAL ENGINEER — STATE OF CALIFORNIA

2-1-10
PLANS APPROVAL DATE

THE STATE OF CALIFORNIA OR ITS OFFICERS OR AGENTS SHALL NOT BE RESPONSIBLE FOR THE ACCURACY OR COMPLETENESS OF ELECTRONIC COPIES OF THIS PLAN SHEET.

AECOM
999 TOWN & COUNTRY RD
ORANGE, CA 92868

ORANGE COUNTY
TRANSPORTATION AUTHORITY
550 S. MAIN STREET
ORANGE, CA 92863-1584

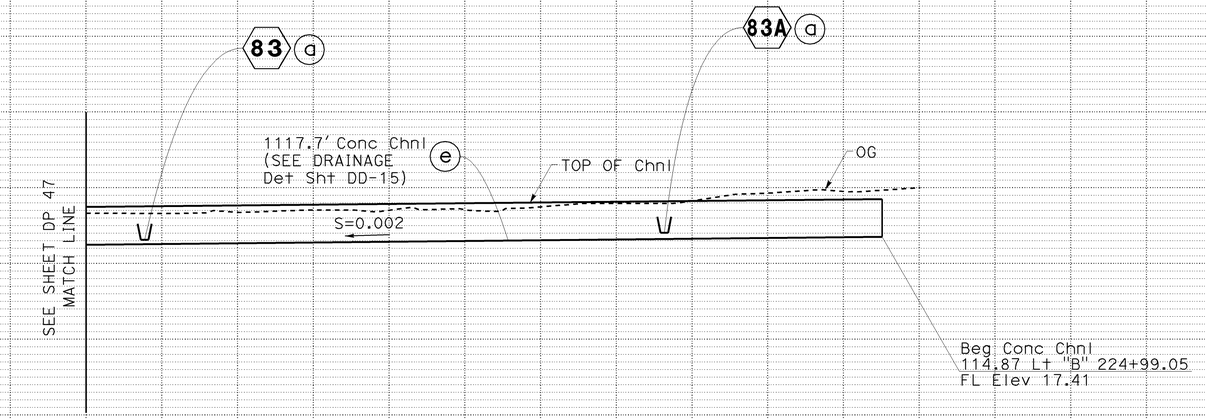

DRAINAGE SYSTEM No. 74

DRAINAGE PROFILE

SCALE: Horiz 1" = 20'
Vert 1" = 4'

DP-48

REVISED BY: DUC TRAN — DATE REVISED: 8/10/09
CALCULATED-DESIGNED BY: RASHOD GIBSON
CHECKED BY: BROOKE RIVERA
CONSULTANT FUNCTIONAL SUPERVISOR: ANDRZEJ NOWAK
STATE OF CALIFORNIA - DEPARTMENT OF TRANSPORTATION — Caltrans

LAST REVISION — DATE PLOTTED => 03-FEB-2010
TIME PLOTTED => 11:15
08-10-09

BORDER LAST REVISED 8/1/2008

RELATIVE BORDER SCALE IS IN INCHES 0 1 2 3

USERNAME => trmnguye
DGN FILE => c07163ib048.dgn

CU 12235

EA 071631

Dist	COUNTY	ROUTE	POST MILES TOTAL PROJECT	SHEET No.	TOTAL SHEETS
12	Ora	22,405, 605	R0.3/R0.9, 22.3/24.0,3.0/R1.6	395	1929

REGISTERED CIVIL ENGINEER — 8/10/09 DATE

JENNIFER BROOKE RIVERA No. C70332 Exp.09/30/10 CIVIL — REGISTERED PROFESSIONAL ENGINEER — STATE OF CALIFORNIA

2-1-10
PLANS APPROVAL DATE

THE STATE OF CALIFORNIA OR ITS OFFICERS OR AGENTS SHALL NOT BE RESPONSIBLE FOR THE ACCURACY OR COMPLETENESS OF ELECTRONIC COPIES OF THIS PLAN SHEET.

AECOM
999 TOWN & COUNTRY RD
ORANGE, CA 92868

ORANGE COUNTY
TRANSPORTATION AUTHORITY
550 S. MAIN STREET
ORANGE, CA 92863-1584

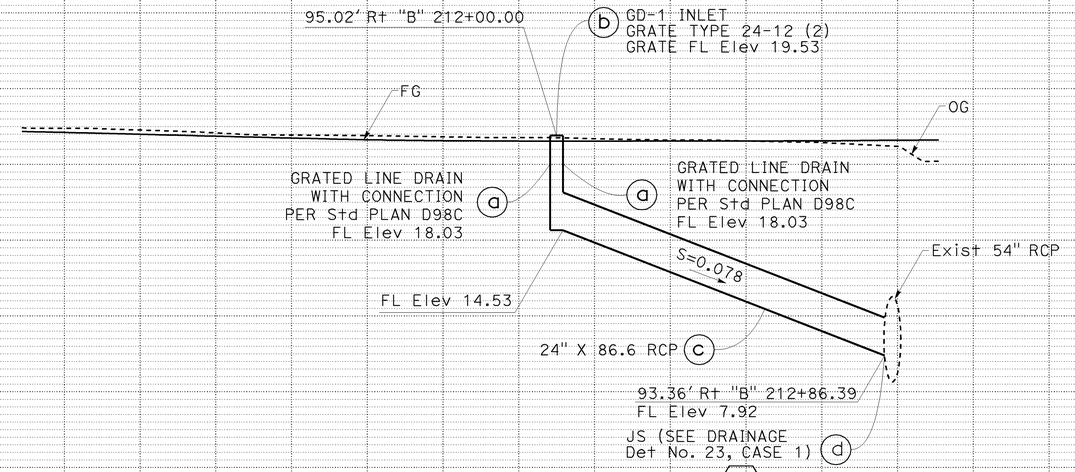

DRAINAGE SYSTEM No. 76

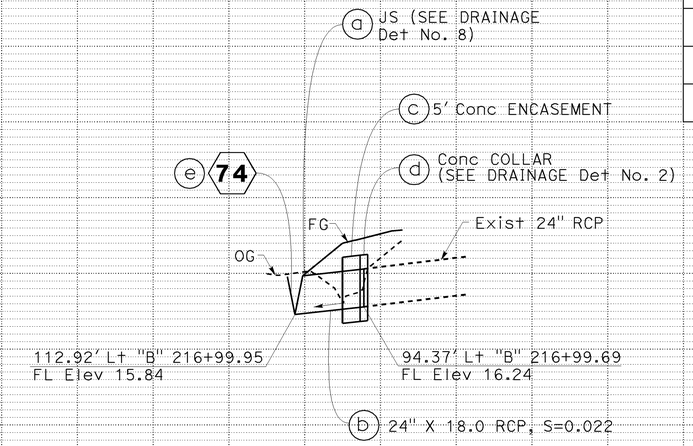

DRAINAGE SYSTEM No. 78

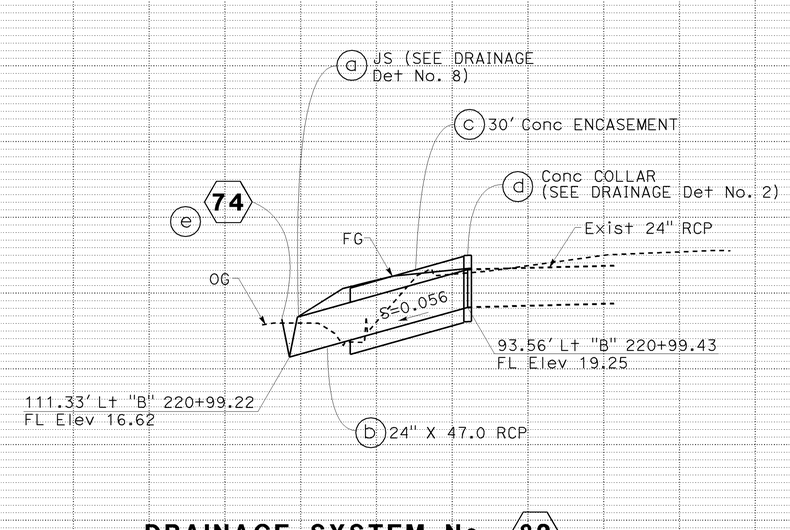

DRAINAGE SYSTEM No. 82

DRAINAGE PROFILE

SCALE: Horiz 1" = 20'
Vert 1" = 4'

DP-49

DUC TRAN 8/10/09 — REVISED BY / DATE REVISED
RASHOD GIBSON / BROOKE RIVERA — CALCULATED-DESIGNED BY / CHECKED BY
ANDRZEJ NOWAK — CONSULTANT FUNCTIONAL SUPERVISOR
STATE OF CALIFORNIA - DEPARTMENT OF TRANSPORTATION — Caltrans

LAST REVISION 08-10-09 — DATE PLOTTED => 03-FEB-2010 — TIME PLOTTED => 11:15

BORDER LAST REVISED 8/1/2008 — RELATIVE BORDER SCALE IS IN INCHES 0 1 2 3

USERNAME => trmnguye
DGN FILE => c071631b049.dgn

CU 12235 — EA 071631

Dist	COUNTY	ROUTE	POST MILES TOTAL PROJECT	SHEET No.	TOTAL SHEETS
12	Ora	22,405, 605	R0.3/R0.9, 22.3/24.0,3.0/R1.6	396	1929

REGISTERED CIVIL ENGINEER 8/10/09 DATE

2-1-10
PLANS APPROVAL DATE

REGISTERED PROFESSIONAL ENGINEER JENNIFER BROOKE RIVERA No. C70332 Exp. 09/30/10 CIVIL STATE OF CALIFORNIA

THE STATE OF CALIFORNIA OR ITS OFFICERS OR AGENTS SHALL NOT BE RESPONSIBLE FOR THE ACCURACY OR COMPLETENESS OF ELECTRONIC COPIES OF THIS PLAN SHEET.

AECOM
999 TOWN & COUNTRY RD
ORANGE, CA 92868

ORANGE COUNTY
TRANSPORTATION AUTHORITY
550 S. MAIN STREET
ORANGE, CA 92863-1584

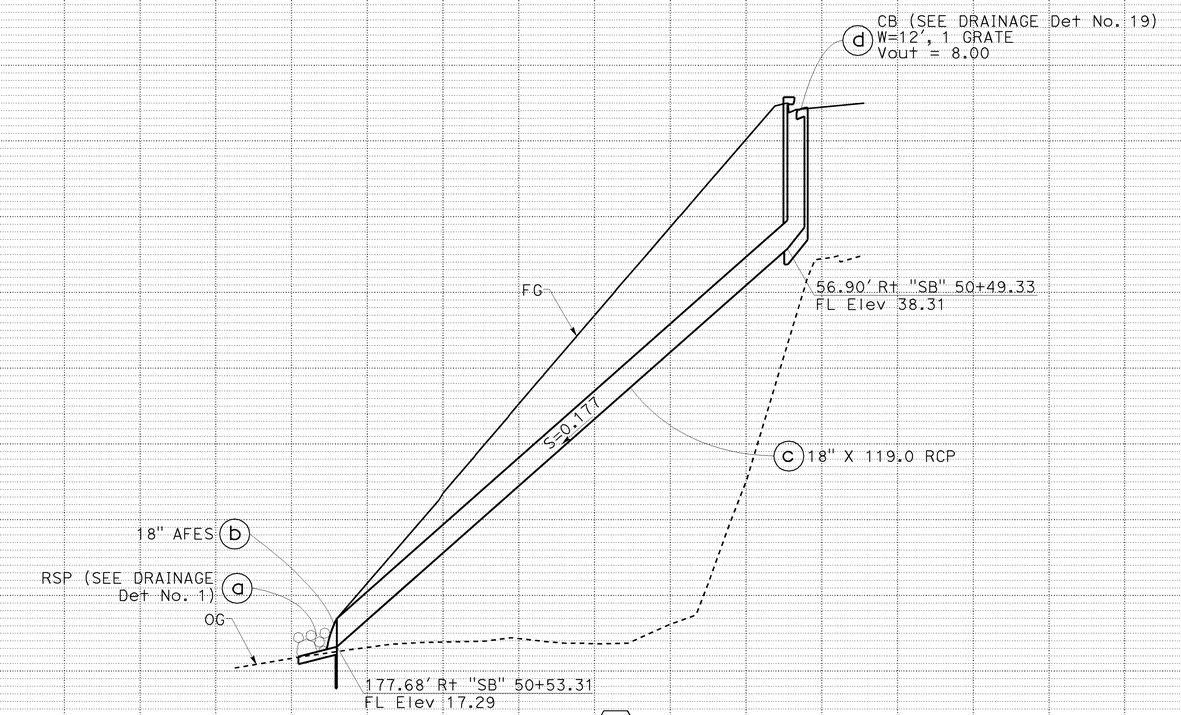

DRAINAGE SYSTEM No. 87

HMAOD TABLE

SYSTEM No.	INLET Elev	OUTLET Elev
74B	19.20	16.45
75	19.44	16.79
77	19.74	17.12
79	19.90	17.37
80	20.15	17.69
81	20.44	18.02
83	20.66	18.36
83A	20.99	18.63
83B	21.20	17.12
84	21.44	19.15
84A	22.12	19.34

DRAINAGE PROFILE

SCALE: Horiz 1" = 20'
Vert 1" = 4'

DP-50

STATE OF CALIFORNIA - DEPARTMENT OF TRANSPORTATION
Caltrans

CONSULTANT FUNCTIONAL SUPERVISOR: ANDRZEJ NOWAK
CALCULATED-DESIGNED BY: RASHOD GIBSON
CHECKED BY: BROOKE RIVERA
REVISED BY: DUC TRAN
DATE REVISED: 8/10/09

LAST REVISION 08-10-09
DATE PLOTTED => 03-FEB-2010
TIME PLOTTED => 11:15

Dist	COUNTY	ROUTE	POST MILES TOTAL PROJECT	SHEET No.	TOTAL SHEETS
12	Ora	22,405, 605	R0.3/R0.9, 22.3/24.0,3.0/R1.6	397	1929

REGISTERED CIVIL ENGINEER — 8/10/09 DATE

JENNIFER BROOKE RIVERA No. C70332 Exp.09/30/10 CIVIL — REGISTERED PROFESSIONAL ENGINEER — STATE OF CALIFORNIA

2-1-10
PLANS APPROVAL DATE

THE STATE OF CALIFORNIA OR ITS OFFICERS OR AGENTS SHALL NOT BE RESPONSIBLE FOR THE ACCURACY OR COMPLETENESS OF ELECTRONIC COPIES OF THIS PLAN SHEET.

AECOM
999 TOWN & COUNTRY RD
ORANGE, CA 92868

ORANGE COUNTY TRANSPORTATION AUTHORITY
550 S. MAIN STREET
ORANGE, CA 92863-1584

REVISED BY: DUC TRAN — DATE REVISED: 8/10/09
CALCULATED-DESIGNED BY: RASHOD GIBSON
CHECKED BY: BROOKE RIVERA
CONSULTANT FUNCTIONAL SUPERVISOR: ANDRZEJ NOWAK
STATE OF CALIFORNIA - DEPARTMENT OF TRANSPORTATION

HMAOD TABLE

SYSTEM No.	INLET Elev	OUTLET Elev
94	23.23	16.00

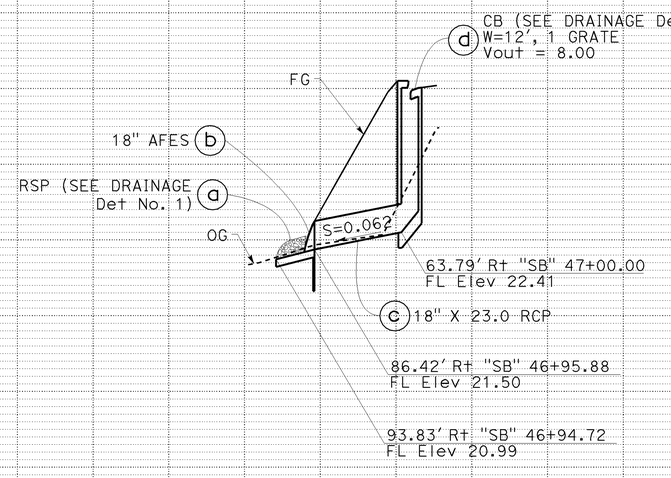

DRAINAGE SYSTEM No. 88

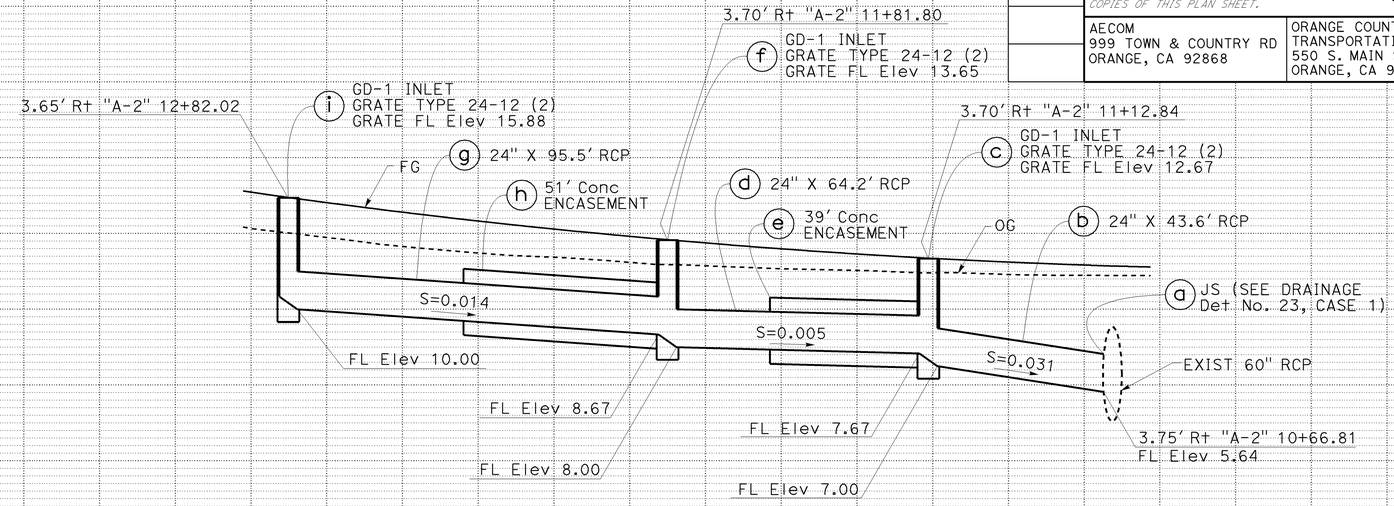

DRAINAGE SYSTEM No. 89

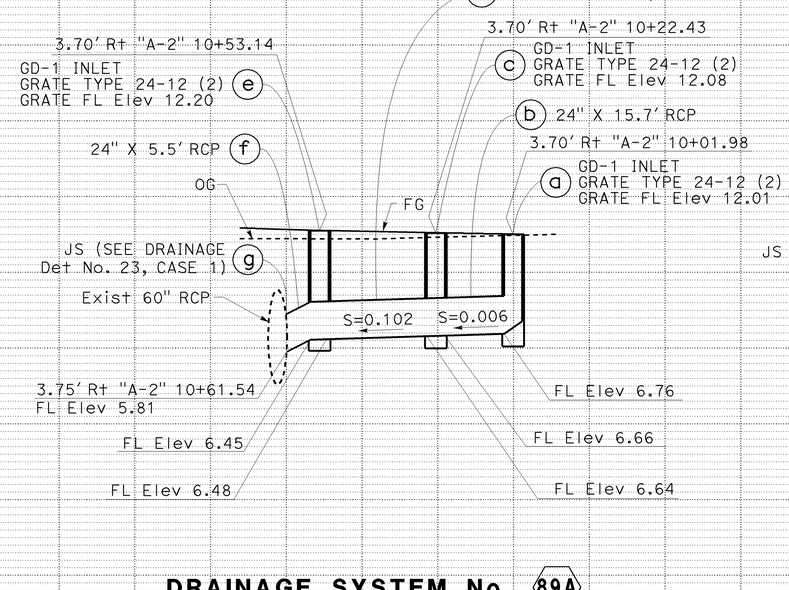

DRAINAGE SYSTEM No. 89A

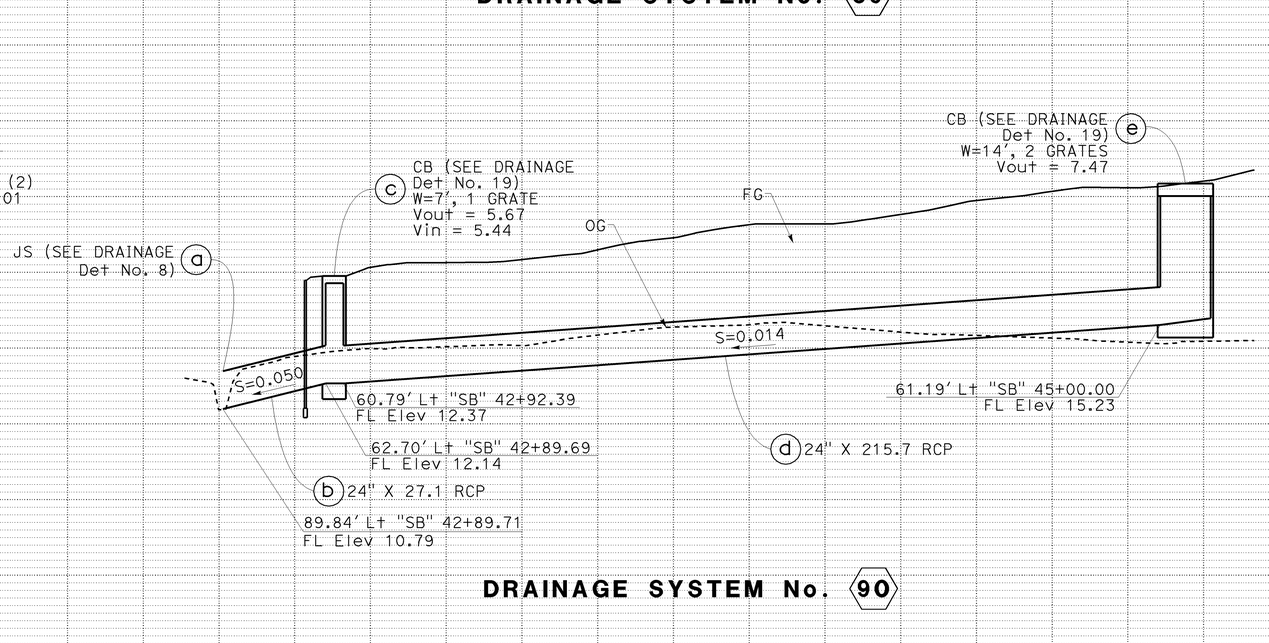

DRAINAGE SYSTEM No. 90

DRAINAGE PROFILE

SCALE: Horiz 1" = 20'
Vert 1" = 4'

DP-51

LAST REVISION: DATE PLOTTED => 03-FEB-2010
08-10-09 TIME PLOTTED => 11:15

BORDER LAST REVISED 8/1/2008 — RELATIVE BORDER SCALE IS IN INCHES 0 1 2 3 — USERNAME => trmnguye — DGN FILE => c07163ib051.dgn — CU 12235 — EA 071631

Dist	COUNTY	ROUTE	POST MILES TOTAL PROJECT	SHEET No.	TOTAL SHEETS
12	Ora	22,405, 605	R0.3/R0.9, 22.3/24.0,3.0/R1.6	398	1929

REGISTERED CIVIL ENGINEER — 8/10/09 DATE

JENNIFER BROOKE RIVERA No. C70332 Exp. 09/30/10 CIVIL — REGISTERED PROFESSIONAL ENGINEER — STATE OF CALIFORNIA

2-1-10
PLANS APPROVAL DATE

THE STATE OF CALIFORNIA OR ITS OFFICERS OR AGENTS SHALL NOT BE RESPONSIBLE FOR THE ACCURACY OR COMPLETENESS OF ELECTRONIC COPIES OF THIS PLAN SHEET.

AECOM
999 TOWN & COUNTRY RD
ORANGE, CA 92868

ORANGE COUNTY TRANSPORTATION AUTHORITY
550 S. MAIN STREET
ORANGE, CA 92863-1584

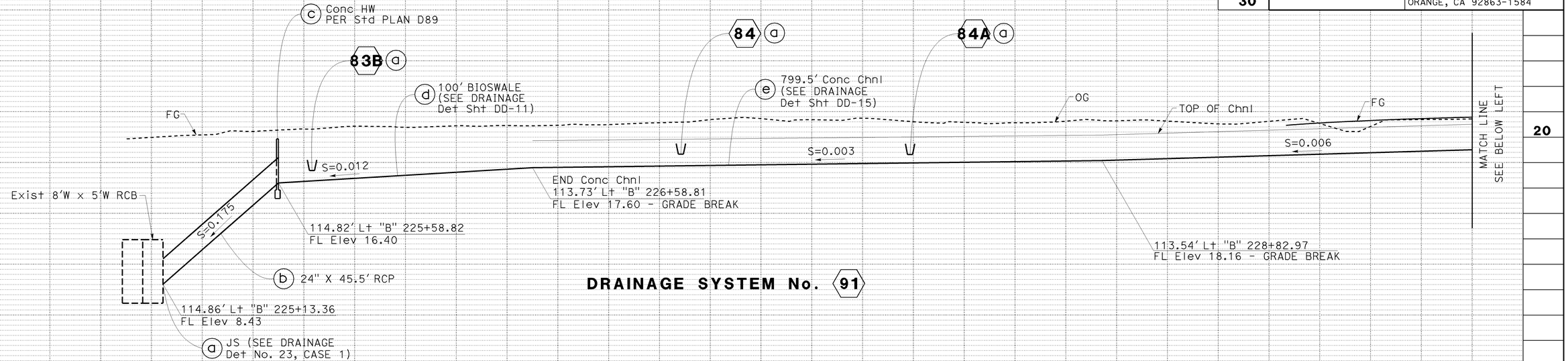

DRAINAGE SYSTEM No. 91

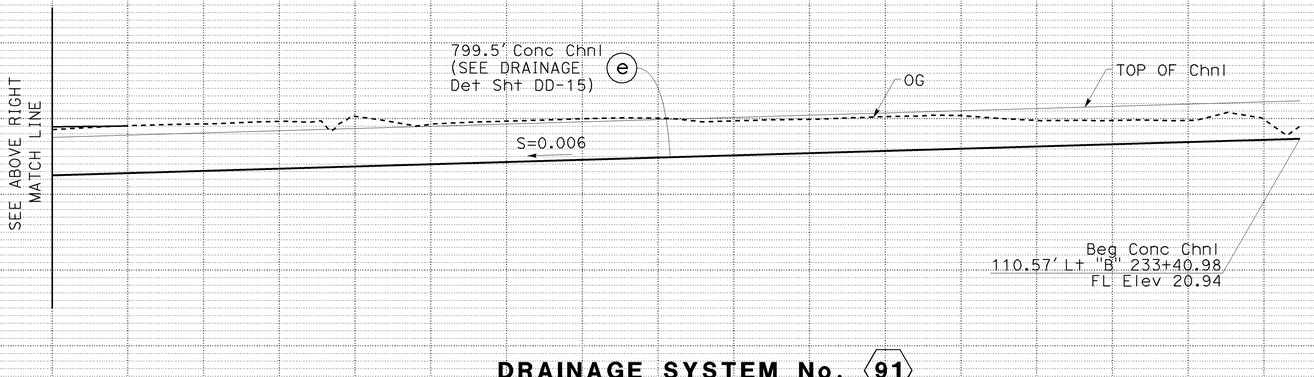

DRAINAGE SYSTEM No. 91

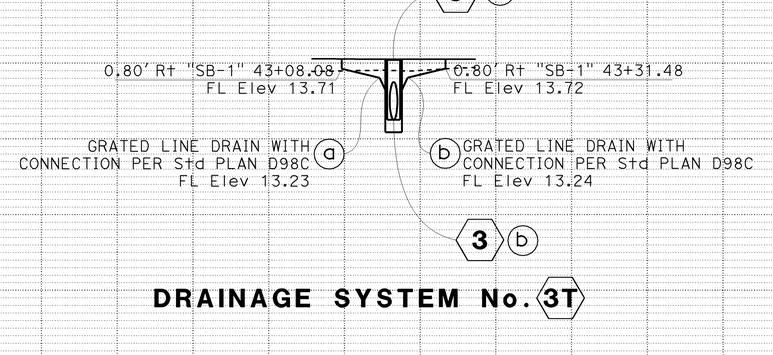

DRAINAGE SYSTEM No. 3T

DRAINAGE PROFILE

SCALE: Horiz 1" = 20'
Vert 1" = 4'

DP-52

REVISED BY: DUC TRAN — DATE REVISED: 8/10/09
RASHOD GIBSON — BROOKE RIVERA
CALCULATED-DESIGNED BY
CHECKED BY
CONSULTANT FUNCTIONAL SUPERVISOR: ANDRZEJ NOWAK
STATE OF CALIFORNIA - DEPARTMENT OF TRANSPORTATION — Caltrans

LAST REVISION — DATE PLOTTED => 03-FEB-2010 — TIME PLOTTED => 11:16 — 08-10-09

BORDER LAST REVISED 8/1/2008 — RELATIVE BORDER SCALE IS IN INCHES 0 1 2 3 — USERNAME => trmnguye — DGN FILE => c071631b052.dgn — CU 12235 — EA 071631

Dist	COUNTY	ROUTE	POST MILES TOTAL PROJECT	SHEET No.	TOTAL SHEETS
12	Ora	22,405, 605	R0.3/R0.9, 22.3/24.0,3.0/R1.6	399	1929

REGISTERED CIVIL ENGINEER — 8/10/09 DATE

2-1-10
PLANS APPROVAL DATE

REGISTERED PROFESSIONAL ENGINEER — JENNIFER BROOKE RIVERA — No. C70332 — Exp.09/30/10 CIVIL — STATE OF CALIFORNIA

THE STATE OF CALIFORNIA OR ITS OFFICERS OR AGENTS SHALL NOT BE RESPONSIBLE FOR THE ACCURACY OR COMPLETENESS OF ELECTRONIC COPIES OF THIS PLAN SHEET.

AECOM
999 TOWN & COUNTRY RD
ORANGE, CA 92868

ORANGE COUNTY
TRANSPORTATION AUTHORITY
550 S. MAIN STREET
ORANGE, CA 92863-1584

SECTION VIEW
BIOFILTRATION SWALE SYSTEM No.7

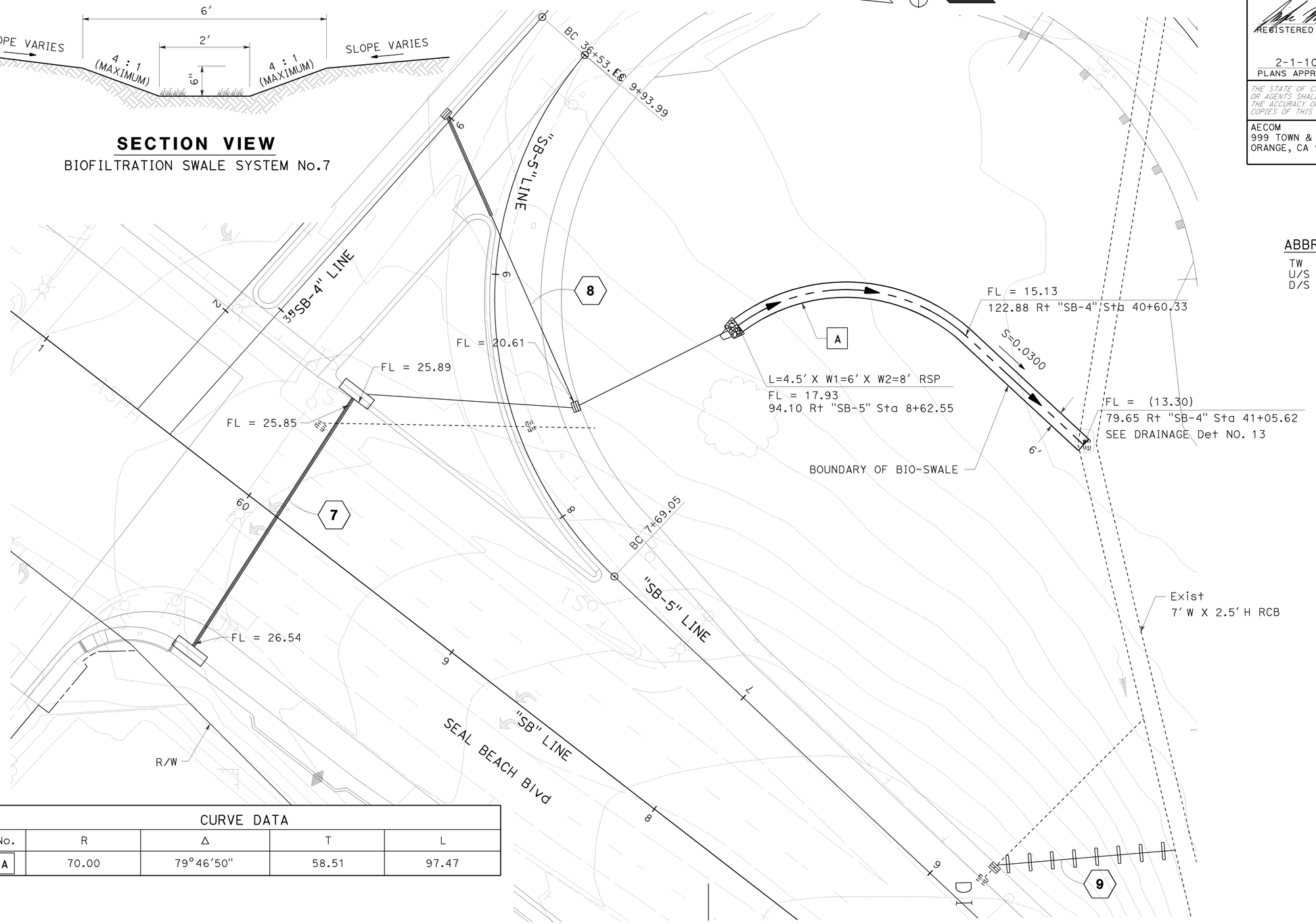

CURVE DATA				
No.	R	Δ	T	L
A	70.00	79°46'50"	58.51	97.47

ABBREVIATIONS

TW	TAILWATER
U/S	UPSTREAM
D/S	DOWNSTREAM

BIO SWALE SYSTEM No. 7

THIS PLAN ACCURATE FOR DRAINAGE WORK ONLY

DRAINAGE DETAILS
SCALE: 1" = 20'

DD-1

STATE OF CALIFORNIA - DEPARTMENT OF TRANSPORTATION — Caltrans

CONSULTANT FUNCTIONAL SUPERVISOR: ANDRZEJ NOWAK

CALCULATED-DESIGNED BY: RASHOD GIBSON
CHECKED BY: BROOKE RIVERA

REVISED BY: DUC TRAN
DATE REVISED: 8/10/09

LAST REVISION DATE PLOTTED => 03-FEB-2010
LAST REVISION TIME PLOTTED => 11:16
08-10-09

BORDER LAST REVISED 8/1/2008

RELATIVE BORDER SCALE IS IN INCHES 0 1 2 3

USERNAME => trmnguye
DGN FILE => c071631c001.dgn

CU 12235

EA 071631

Dist	COUNTY	ROUTE	POST MILES TOTAL PROJECT	SHEET No.	TOTAL SHEETS
12	Ora	22,405, 605	R0.3/R0.9, 22.3/24.0,3.0/R1.6	400	1929

REGISTERED CIVIL ENGINEER — DATE 8/10/09

2-1-10
PLANS APPROVAL DATE

REGISTERED PROFESSIONAL ENGINEER
JENNIFER BROOKE RIVERA
No. C70332
Exp. 09/30/10
CIVIL
STATE OF CALIFORNIA

THE STATE OF CALIFORNIA OR ITS OFFICERS OR AGENTS SHALL NOT BE RESPONSIBLE FOR THE ACCURACY OR COMPLETENESS OF ELECTRONIC COPIES OF THIS PLAN SHEET.

AECOM
999 TOWN & COUNTRY RD
ORANGE, CA 92868

ORANGE COUNTY
TRANSPORTATION AUTHORITY
550 S. MAIN STREET
ORANGE, CA 92863-1584

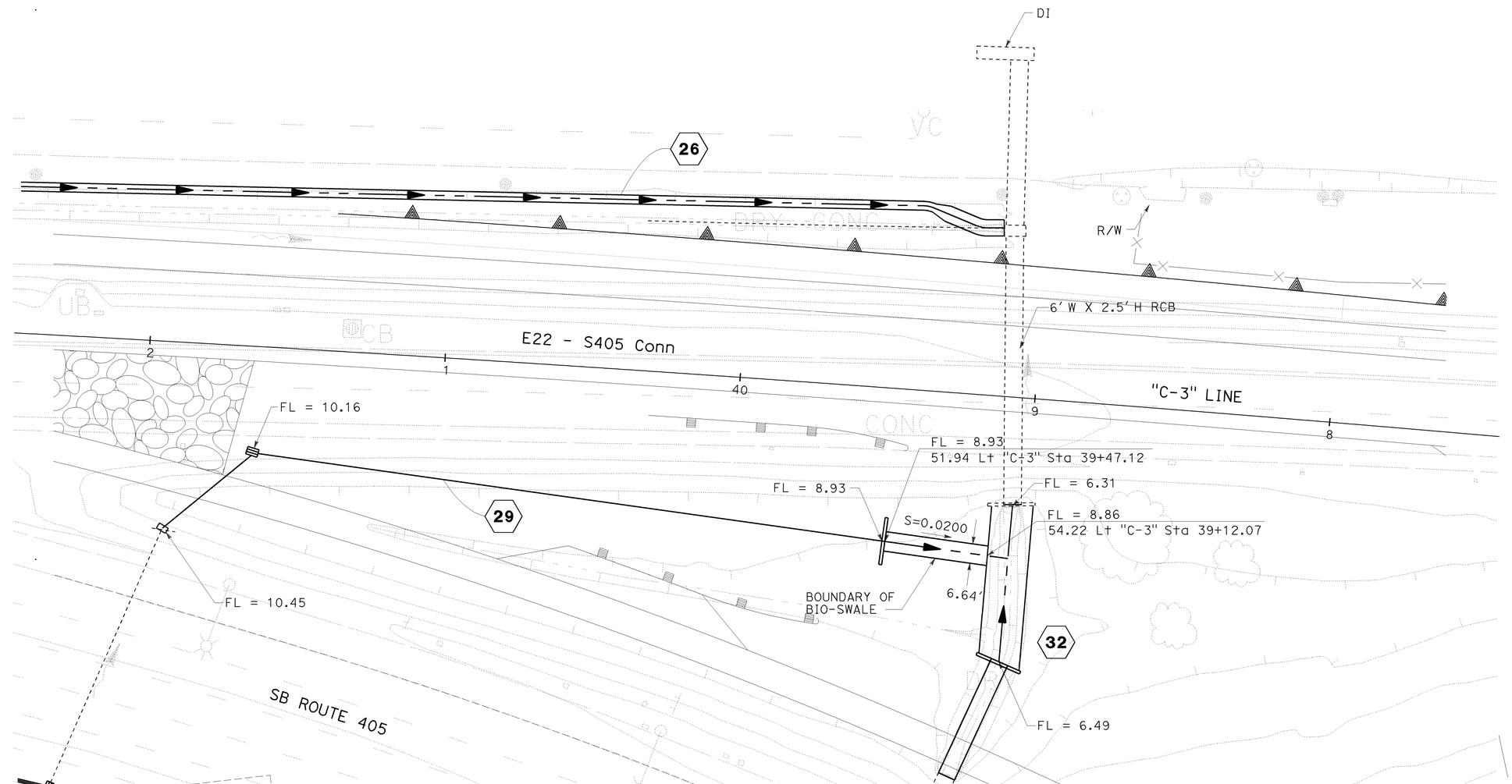

BIO SWALE SYSTEM No. 29

SECTION VIEW

BIOFILTRATION SWALE SYSTEM No. 29

DRAINAGE DETAILS

SCALE: 1" = 20'

THIS PLAN ACCURATE FOR DRAINAGE WORK ONLY

DD-2

REVISED BY	DATE REVISED
DUC TRAN	8/10/09

CALCULATED-DESIGNED BY: RASHOD GIBSON
CHECKED BY: BROOKE RIVERA

CONSULTANT FUNCTIONAL SUPERVISOR: ANDRZEJ NOWAK

STATE OF CALIFORNIA - DEPARTMENT OF TRANSPORTATION
Caltrans

LAST REVISION: 08-10-09
DATE PLOTTED => 03-FEB-2010
TIME PLOTTED => 11:16

BORDER LAST REVISED 8/1/2008

RELATIVE BORDER SCALE IS IN INCHES 0 1 2 3

USERNAME => trmnguye
DGN FILE => c071631c002.dgn

CU 12235

EA 071631